FINAL
CONSTRUCTION COMPLETION REPORT
OPERABLE UNITS 1 AND 2 GROUNDWATER TREATMENT SYSTEMS EXTRACTION/RECOVERY WELL ELECTRICAL SYSTEM UPGRADE

FORMER UNISYS SITE
LAKE SUCCESS, NEW YORK
NYSDEC SITE ID #130045

Prepared for:
Lockheed Martin Corporation

Prepared by:
EnSafe, Inc.

October 2021

Revision: 1

Robert McCarthy, P.E., Project Manager

ENGINEER OF RECORD CERTIFICATION

I, Stuart C. Pearson, of AMEC E&E, PC at 209-35 Northern Blvd, Bayside, New York am currently a registered professional engineer licensed by the State of New York, I had primary direct responsibility for the design of the remedial program activities and construction inspections, and I certify that the Operable Units 1 and 2 Groundwater Treatment Systems Extraction/Recovery Well Electrical System Upgrades were completed and that construction activities were completed in substantial conformance with the Department-approved Design (AMEC, June 2020a) and Work Plan for Operable Units 1 and 2 Groundwater Treatment Systems Extraction/Recovery Well Electrical System Upgrade (EnSafe, March 2021a).



Stuart C Pearson, PE		October 15, 2021
Name	Signature	Date

TABLE OF CONTENTS

Section	Page
Table of Contents	**ii**
Section 1 Introduction and Site Background	**1-1**
1.1 Site Background	1-1
1.2 Purpose of Upgrades	1-2
Section 2 Extraction Well Electrical Upgrades	**2-3**
2.1 Project Organization	2-3
2.2 Governing Documents	2-3
2.3 Submittals	2-4
2.4 Permits	2-4
2.5 Approvals	2-5
2.6 Communications and Reporting	2-5
2.7 Schedule	2-5
2.8 Mobilization	2-5
2.8.1 Construction Kickoff Meeting/Operational Readiness Review	2-5
2.8.2 Photo Documentation of Site	2-6
2.8.3 Delivery of Materials and Equipment and Site Preparation	2-6
2.8.4 Intrusive Fieldwork Requirements	2-6
2.8.5 Personnel Mobilization	2-6
2.9 Construction Oversight	2-7
2.10 Health and Safety	2-7
2.11 Community Air Monitoring	2-8
2.12 Demolition	2-8
2.13 Site Work	2-8
2.14 System Work	2-9
2.14.1 Electrical Equipment Upgrades	2-9
2.14.2 Instrumentation and Controls Upgrades	2-10
2.15 Start-Up, Testing, and Inspections	2-11
2.15.1 System Startup and Testing	2-11
2.15.2 Concrete and Compaction Testing	2-12
2.15.3 Substantial Completion Inspection	2-12

2.16 Site Restoration and Demobilization 2-12
2.17 Additional Work 2-12
2.18 Deviations 2-13
Section 3 Waste Management Report 3-1
3.1 Wastes Generated 3-1
3.2 Waste Characterization 3-2
3.3 Waste Storage 3-2
3.4 Documentation 3-2
Section 4 References 4-1

FIGURES

Figure 1 Site Location Map
Figure 2 Site Plan
Figure 3 Site and Temporary Facilities Layout Plan

APPENDICES

Appendix A Submittal Register
Appendix B Permits
Appendix C Correspondence with Regulators
Appendix D Daily Reports
Appendix E Weekly Reports
Appendix F Photographs
Appendix G Intrusive Field Work Requirements
Appendix H Health and Safety Documentation
Appendix I Equipment Testing
Appendix J Operation and Maintenance Manuals
Appendix K Quality Control Testing
Appendix L Record Drawings
Appendix M Waste Documentation

ACRONYMS AND ABBREVIATIONS

AMEC	AMEC E&E, PC
CCR	Construction Completion Report
EnSafe	EnSafe Inc.
EW	extraction well
GWTS	groundwater treatment system
HASP	Health and Safety Plan
I/O	input/output
Lockheed Martin	Lockheed Martin Corporation
MCC	motor control center
NYSDEC	New York State Department of Environmental Conservation
OU	Operable Unit
RCP	remote control panel
RTO	Remediation Technical Operations
RW	recovery well
SCADA	supervisory control and data acquisition
Site	Former Unisys Site
SSDS	sub-slab depressurization system
VFD	variable frequency drive
VOC	volatile organic compound

SECTION 1
INTRODUCTION AND SITE BACKGROUND

On behalf of Lockheed Martin Corporation (Lockheed Martin), EnSafe Inc. (EnSafe) has prepared this Construction Completion Report (CCR) for electrical upgrades to the existing Operable Unit (OU) 1 and OU2 groundwater treatment systems (GWTS) that were performed at the Former Unisys Site located in the Village of Lake Success and Town of North Hempstead, New York (the Site). The Site is listed by New York State Department of Environmental Conservation (NYSDEC) as a Class 2, Inactive Hazardous Waste Site (NYSDEC Site No. 130045). This CCR includes project and site background information, a description of the pre-construction and construction activities completed, and deviations from the design.

1.1 SITE BACKGROUND

The Site is located at 1111 Marcus Avenue, Lake Success, New York and is a 90-acre property fully developed with the former main manufacturing building, smaller support buildings, three recharge basins, and parking lots (Figure 1 and Figure 2). Currently, the Site is occupied by multiple tenants for commercial use. The surrounding properties are used for residential and commercial activities.

Groundwater at the Site is impacted by chlorinated volatile organic compounds (VOCs), predominantly: trichloroethene, tetrachloroethene, cis-1,2-dichloroethene, and Freon 113. Soil and sediment at the Site are impacted by metals and polycyclic aromatic hydrocarbons.

The Site consists of two OUs: OU1 (the 90-acre site) and OU2 (the off-site groundwater contamination). The remedy for both OUs includes GWTSs, as well as other remedial components including a soil vapor extraction system, two active sub-slab depressurization systems (SSDSs), a passive venting system, environmental easements, water supply protection, and a Site Management Plan (currently draft).

1.2 PURPOSE OF UPGRADES

The existing electrical and instrumentation controls at the extraction wells (EWs) and recovery wells (RWs) for the OU1 and OU2 GWTSs were originally installed over ten years ago. The majority of the components had reached the end of their operational life expectancy and needed to be upgraded or replaced to improve reliability of the system. Improvements to electrical service also included a new variable frequency drive (VFD) at the OU2 RW, as identified for the NYSDEC.

Work was performed in general accordance with the 100% Revised Design: Operable Units 1 and 2 Extraction/Recovery Well Electrical Upgrades (AMEC, June 2020a) and the Work Plan for Operable Units 1 and 2 Groundwater Treatment Systems Extraction/Recovery Well Electrical System Upgrade (EnSafe, March 2021a), as described in this CCR. Areas of work can be found on Figure 3.

SECTION 2
EXTRACTION WELL ELECTRICAL UPGRADES

2.1 PROJECT ORGANIZATION

Listed below are the key companies and personnel involved with completing this work.

- Principal Responsible Party – Lockheed Martin Corporation
- Remediation Technical Operations (RTO) – CDM Smith
- Engineer of Record – AMEC E&E, PC (AMEC)
- Primary Contractor – EnSafe
- Key EnSafe Subcontractors:
    - Construction – EnviroTrac
        - Electrician – Hinck Electrical Contactors
        - Electrical Controls – Eagle Controls
        - Independent Third Party Electrical Inspection – Electrical Inspectors, Inc.
    - Waste Disposal – Innovative Recycling Technologies
- Soil Compaction and Concrete Testing – Soil Mechanics Drilling Corp.

2.2 GOVERNING DOCUMENTS

- 100% Revised Design: Operable Units 1 and 2 Extraction/Recovery Well Electrical Upgrades (AMEC, June 2020a)
- Startup, Testing, and Commissioning Plan: Operable Units 1 and 2 Extraction/Recovery Well Electrical Upgrades (AMEC, March 2021)
- Work Plan for Operable Units 1 and 2 Groundwater Treatment Systems Extraction/Recovery Well Electrical System Upgrade (EnSafe, March 2021a), which included the following plans:
    - Community Air Monitoring Plan
    - Construction Management Plan
    - Construction Quality Control Plan
    - Health and Safety Plan

- Emergency Response Plan
- Traffic Control and Transportation Plan
- Security Plan
- Site and Temporary Facilities Layout Plan
- Environmental Protection and Erosion Control Plan
- Waste Management Plan
- Permit Compliance Plan

2.3 SUBMITTALS

Submittals to the Engineer of Record (AMEC) included warranties, insurance, shop drawings, manufacturers' certifications, product literature and data, samples, information submittals, requests for information, and procurement of materials in accordance with the Drawings and Specifications (AMEC 2020a). Submittals were approved as compliant with design except as noted in Section 2.18. The submittal register is provided in Appendix A.

2.4 PERMITS

The work was subject to Village of Lake Success Application for Permit to Build or Install (Commercial Building Permit) (Permit No.: 20-106A) and Town of North Hempstead Application for Electrical Equipment Installation (Permit No.: 20210998).

After the completion of the work, UL inspections of electrical components were completed by an independent third-party company, Electrical Inspectors, Inc., of East Meadow, New York. The inspection of OU2 and RW-100 was completed on May 25, 2021 with no deficiencies found by the electrical inspector. The OU1 and associated vault inspections were completed on May 25, 2021 with no deficiencies found by the electrical inspector. The inspection certificates were provided to the Town of North Hempstead and Village of Lake Success on July 27, 2021 to finalize the permits. Copies of permits and the Inspection Certifications are provided in Appendix B.

2.5 APPROVALS

NYSDEC and the New York State Department of Health approved the Work Plan on March 10, 2021 (Appendix C). There were no additional approvals required from NYSDEC or the New York State Department of Health to complete this work.

2.6 COMMUNICATIONS AND REPORTING

The Work Plan required the preparation and submittal of daily reports and weekly reports. Each daily report contains a summary of weather, equipment, work performed, photographs, and other pertinent information. The daily reports were prepared by the Site Health and Safety Officer and uploaded to the project SharePoint site for team review (Appendix D). The weekly reports were provided to Lockheed Martin and NYSDEC via email (Appendix E).

Weekly progress meetings were held via teleconference to discuss progress, deviations, and other relevant information.

2.7 SCHEDULE

Work was performed the following days; details can be provided in each day's report (Appendix D):

- March 15 through April 22, 2021
- April 28 through May 10, 2021
- May 17, 2021
- June 3, 2021
- June 14 and 15, 2021
- June 28, 2021

2.8 MOBILIZATION

2.8.1 Construction Kickoff Meeting/Operational Readiness Review

A pre-construction meeting/Operational Readiness Review was held with EnSafe, Lockheed Martin, the RTO (CDM Smith), the Engineer (AMEC), and EnviroTrac on February 24, 2021 prior to field mobilization to confirm and document the readiness of all contractors/subcontractors, operators, and equipment/materials/systems to perform the intended work.

2.8.2 Photo Documentation of Site

The site was photographed after work was completed to document work areas disturbed and modified during this construction program. Progress photographs are provided in the daily reports (Appendix D) and the pre- and post-construction photographs are provided in Appendix F.

2.8.3 Delivery of Materials and Equipment and Site Preparation

The construction staging area was established in the parking lot outside of the OU1 GWTS building where materials and equipment were staged for the project. The construction work areas were established at each well vault as work progressed. Existing fencing was utilized at RW-100 and temporary fencing was not required at the OU1 vaults because the work was contained within the vaults. Erosion control (silt fencing) was installed at OU2 prior to excavation activities.

Traffic, vehicles, and equipment were managed in accordance with the Traffic Control and Transportation Plan. Complaints made to Lockheed Martin or EnSafe personnel were addressed as soon as possible. The following complaints were received:

- The OU1 property owner raised concern regarding tire impressions and ruts in a grassy area. The ruts were caused by subcontractor equipment traveling the grassy area following a rainy day. The grassy area was raked and seeded once work in the area was complete.
- The OU1 property owner raised concern regarding damaged sprinklers near the OU1 RWs. The area was investigated, and it was determined the damaged sprinkler was outside of work areas. Therefore, damage to the sprinklers was not caused by EnSafe staff or subcontractors.

2.8.4 Intrusive Fieldwork Requirements

Utility location and mark-out were conducted by a private utility locator in addition to contacting the one-call service for New York State. The one-call service was notified at least 72 hours prior to any excavation work. A dig permit and risk handling checklist were completed as needed. Existing information regarding suspected or known underground utilities and structures was provided to the private utility locators to assist with utility and services location. The utility mark-out report, dig permit, and risk handling checklist are provided in Appendix G.

2.8.5 Personnel Mobilization

Field personnel completed a site orientation including review of the site-specific Health and Safety Plan (HASP) before or upon mobilizing to the Site. Onsite personnel were properly trained in

Occupational Safety and Health Administration hazardous-waste operations (HAZWOPER) and annual refresher training. Onsite personnel also received radiation awareness training and were informed regarding site-specific radiation hazards.

2.9 CONSTRUCTION OVERSIGHT

EnSafe provided one full-time on-site construction manager/superintendent/health and safety officer as well as a support team (engineering support, project manager, etc.) for project management and construction quality control oversight; tasks included:

- Construction management and field oversight of staff, materials, and equipment to ensure work was implemented in accordance with the design documents, work plans, and permits
- Implementing site and work controls to protect the workforce, site occupants, environment, and property, including confined spacy entry permits
- Implementing health and safety requirements and performing daily health and safety tailgate meetings
- Inspections and testing
- Coordinating and hosting inspections by regulatory authorities as needed; submitting copies of inspection reports and certifications
- Implementing the Construction Quality Control Plan and associated quality controls

2.10 HEALTH AND SAFETY

Work was performed in accordance with governmental requirements, including Site and worker safety requirements mandated by Federal OSHA, as prescribed in the Project-Specific HASP and the Emergency Response Plan (EnSafe, March 2021a). EnSafe and all subcontractors participated in daily safety tailgate meetings and conformed to HASP requirements. The daily tailgate meetings were documented in the daily Safe Work Assessment and Permit (Appendix H).

Safety audits were performed on April 7, 2021 and June 14, 2021; these audits did not identify any deficiencies (Appendix H).

COVID-19 precautions such as wearing masks and maintaining distances as much as practicable were also taken as required by New York State and local authorities.

2.11 COMMUNITY AIR MONITORING

Because intrusive ground surface activities were limited to the OU2 GWTS site and were surficial in nature, the community air monitoring plan was to consist of dust monitoring during the OU2 GWTS site work. Due to a miscommunication with the subcontractor, air monitoring was not performed during the only time intrusive work was performed as part of this project (3 hours on March 29, 2021); however, no visible dust was generated during this work.

2.12 DEMOLITION

Demolition activities included the abandonment and removal of corroded electrical equipment and electrical panels in the EW-1R, RW-1RS, RW-1RD, and RW-100 well vaults, including:

- Performing inventory and recording the condition of items scheduled as "remove and re-install."
- Protecting structures, equipment, permanent fixtures, and existing finish work from soiling or damage, as required.
- Disconnecting and capping utilities within the work area as needed in coordination with the utilities. Other utilities serving occupied or used facilities, except when authorized, were maintained and protected.
- Removal of existing electrical panels from each EW/RW vault.
- Removal of abandoned conduits and electrical equipment in each EW/RW vault.
- Filling holes in the EW/RW vaults walls from removal of existing equipment and conduit.
- Sealing existing and new vault electrical penetrations.
- Maintenance of erosion control measures.

2.13 SITE WORK

Site work activities included installing a concrete pad for the RW-100 VFD and remote control panel (RCP). Tasks included:

- Clearing and grubbing
- Excavation for new concrete pad
- Onsite management of soil for site grading
- Backfilling and compaction

    - Fill material consisted of approximately two cubic yards of crushed stone subbase that was placed below the concrete pad. This material was obtained from Tilcon New York's West Nyack Quarry, which is a 100% virgin traprock source.

- Installation of new cast-in-place concrete pad
- Site grading and seeding
- Maintenance of erosion control measures

Installation of a concrete pad for the OU1 harmonic filter required the following tasks:

- Removal of asphalt surface material
- Preparation and compaction of subgrade material for concrete pad installation (no subsurface soils were removed)
- Installation of new cast-in-place concrete pad
- Removal of forms and repair of asphalt around concrete pad

Installation of a concrete pad for the OU2 vault stairs required the following tasks:

- Removal of asphalt surface material
- Management of subsurface soil (re-use on-site)
- Preparation and compaction of subgrade material for concrete pad installation
- Installation of new cast-in-place concrete pad
- Remove forms and repair asphalt around concrete pad

2.14 SYSTEM WORK

2.14.1 Electrical Equipment Upgrades

EnSafe and its subcontractors completed upgrades to electrical equipment at the EW-1R, RW-1RS, RW-1RD, and RW-100 well vaults in accordance with the Work Plan, Drawings and Specifications; permits; and local, state, and federal codes and regulations. Tasks included:

- OU1 GWTS
    - Replacing electrical and instrumentation RCPs at OU1 GWTS well vaults EW-1R, RW-1RD, and RW-1RS
- OU2 GWTS
    - Installing new Allen-Bradley PowerFlex 755 VFD for RW-100 well pump

  - Installing two new electrical panels above grade at the RW-100 well vault
  - Installing a new breaker at the motor control center (MCC)
- OU1 and OU2 GWTSs
  - Replacing electrical junction boxes, conduit, outlets, light fixtures, and switches to remain in the vaults after removal of the RCP, starter panel, and power panel with corrosion resistant materials
  - Installing active harmonics filters at each GWTS
  - Inspection and testing of the new installations
  - Maintenance of erosion and sediment control measures during construction
  - Protection of the existing operating systems during construction activities
  - Patching and repair of well vaults

The following required criteria were met by the installation:

- Code required clear space in front of panel: 36-inches minimum, 42 inches minimum for 480-volt panels (48 inches in front of equipment)
- Code required maximum height to panel disconnect: 6 feet, 6 inches
- Minimum spacing between panels: 6 inches for room to install conduit hubs
- Mounting: Stainless steel unistrut mounted on a new concrete pad adjacent to the existing vault
- Enclosures: National Electrical Manufacturers Association 4X Stainless Steel
- Area classification: Non-hazardous (no hazardous classification areas)

Power distribution from the MCCs in each GWTS to the well vaults did not change with this design; existing feeds from the MCCs were connected to the new panels which in turn feed individual devices.

2.14.2 Instrumentation and Controls Upgrades

EnSafe and its subcontractors completed upgrades to existing instrumentation and control systems in accordance with the Work Plan, Drawings and Specifications; permits; and local, state, and federal codes and regulations. Tasks included:

- OU1 and OU2 GWTSs
  - Installing new RCPs inside the EW-1R, RW-1RS, and RW-1RD well vaults and outside the RW-100 well vaults
  - Connecting existing input/output (I/O) to the new RCPs
  - Installing new water level transducers
  - Installing new intrusion alarms on each panel
  - Installing a new intrusion alarm vault at each well vault
  - Providing spare I/O for future use
  - Upgrading ethernet switches associated with the fiberoptic system to provide a self-healing network such that one break of the fiber does not take down all pumps (this includes upgrades for fiberoptic connections at the MCPs and OU1 GWTS RW-3)
  - Reprogramming the MCPs to update the supervisory control and data acquisition (SCADA) systems, including the Main SSDS SCADA, Win911, and the historian (located at the Main SSDS Control Room) to accommodate the new controls
  - Inspection and testing of the new installations and controls
  - Replacing the existing RW-100 1769 CompactLogix Programmable Logic Controller with an Allen-Bradley 1794 Flex I/O module (reused the existing Allen-Bradley 1794 Flex I/O modules at EW-1R, RW-1RS, and RW-1RD)
- OU2 GWTS
  - The automatic control of the RW-100 well pump was added based on flow rate. The Programmable Logic Controller will automatically adjust the VFD output to control the pump flow rate to the setpoint entered in the SCADA interface. Manual overrides of the automatic control are available at the SCADA interface and at the RCP.

2.15 START-UP, TESTING, AND INSPECTIONS

2.15.1 System Startup and Testing

Startup testing of the GWTSs was performed by AMEC and EnSafe, along with its subcontractors, and in coordination with the operations, maintenance, and monitoring contractor in accordance with the *Starting, Testing, and Commissioning Plan: Operable Units 1 and 2 Extraction/Recovery Well Variable Frequency Drive Upgrade* (AMEC 2021). Startup testing included calibration of instrumentation and control devices; performing inspections and testing; implementing start-up and shake-down procedures of the control and monitoring equipment associated with the

EW/RWs; and all else required to produce a fully functioning system and to complete this work in accordance with the final design documents.

During this startup phase, each system component was started and tested through its full range of operational capability and then the system was started as a whole. The system tests verified the functionality and operational conditions including normal, alarm, manual, auto, and off. Following successful system start-up as determined by the Engineer, a demonstration test was conducted.

Testing documentation is provided in Appendix I; Operation and Maintenance Manuals are provided in Appendix J.

2.15.2 Concrete and Compaction Testing

The RTO coordinated third party concrete and compaction testing for the RW-100 concrete pad on April 5, 2021. Concrete and compaction testing were performed by Soil Mechanics Drilling Corp. of Seaford, New York. Concrete and compaction test results are included in Appendix K.

2.15.3 Substantial Completion Inspection

The substantial completion inspection was performed by AMEC on June 3, 2021. Minor items were noted and resolved by June 28, 2021; the Engineer's representative was present during the June 28, 2021 site visit to confirm all minor items were addressed to their satisfaction.

2.16 SITE RESTORATION AND DEMOBILIZATION

Upon completion of work, signs of the construction such as work areas, structures, foundations of temporary structures, and stockpiles of excess or waste materials were removed. Demobilization included removal of equipment, materials, debris, and other items that were delivered to the Site and/or generated during the work that are not part of the permanent installations; final cleanup of the project site; removal of erosion and sedimentation control facilities; and final restoration of the work area including maintenance of seeded areas until new vegetation is established. Temporary facilities at the Site were terminated and removed.

2.17 ADDITIONAL WORK

During implementation of the work, the following additional tasks that were not part of the design were also performed:

- **Fiber optic loop:** Prior to the initiation of work at the OU1 vaults, a concern was raised that the fiber optic loop was unable to maintain communication with the main control panel if the power was shut off at one of the EW vaults, RW-1RS or RW-1RD. This condition would cause the entire system to shut down. During the time that power was off, a temporary connection was required within the RW-1RS and RW-1RD vaults in order to maintain communication and allow the remainder of the system to operate. Additional programming was also conducted within the system controls, further allowing a single well to be off-line with the remainder of the system operational.

- **Grounding at RW-100:** Upon beginning work at RW-100, it was determined that a ground grid was not present as originally indicated on the design drawings. As a result, grounding at RW-100 was accomplished via a newly installed grounding rod.

- **Damaged conduit at RW-100:** During excavation for the concrete pad at RW-100, a damaged electrical conduit was discovered below grade and within the footprint of the excavation. The damaged conduit was inspected and based on the presence of tape around the damaged section, it was apparent that a previous repair had been attempted to the conduit, prior to the excavation work. Hinck repaired the damaged electrical conduit by disconnecting the wires in the conduit from the control panel and pulling them back through the conduit to the damaged section, cutting out the damaged section and installing a new coupling, pulling wires back to control panel, and then reconnecting the wires to the control panel.

- **OU1 harmonic filter:** The final design for the OU1 harmonic filter implied it would be mounted to an existing wall. However, based on field conditions, it was determined that wall mounting was not feasible. The Engineer then directed that the OU1 harmonic filter be installed on a reinforced concrete pad located along the western exterior of the OU1 groundwater treatment building. EnviroTrac completed the concrete pad by removing existing asphalt in the area of the proposed concrete pad, compacting underlying soil (subbase), and pouring a 6-inch thick, 4-foot by 3-foot slab-on-grade concrete pad with 6-inch reinforcing wire fabric. The Engineer and RTO did not require soil compaction or concrete testing related to the installation of this OU1 harmonic filter pad because the concrete pad was installed on undisturbed, compacted subbase.

- **Stray voltage:** Stray voltage was previously identified at vaults EW-1R, RW-1RS, and RW-1RD prior to the initiation of this project. At the request of the RTO and Engineer, on June 28, 2021 EnSafe's electrical contractor visited the site to perform an investigation into possible sources of the stray voltage. During the investigation, the electrical contractor was able to isolate the occurrence of stray voltage and determined it was from the inductance of voltage across the 480-volt pump power cables and the applicable vault power cables that run in the same conduit to the EW-1R, RW-1RS, and RW-1RD vaults.

2.18 DEVIATIONS

Record drawings are included in Appendix L. Deviations from the design are shown on the drawings and are summarized below:

- **Grounding at RW-100:** Grounding at RW-100 was accomplished via a grounding rod, after it was determined that the ground grid was not present, as discussed in Section 2.17.

- **OU1 harmonic filter:** The OU1 harmonic filter was installed on a concrete pad instead of mounted to the treatment building, as discussed in Section 2.17

- **OU2 vault stairs installation:** The project design included stairs to be installed at the utility vault outside the OU2 treatment building. The stairs were determined to require a foundation or support system for long term stability. A concrete pad was designed and constructed where the stairs were placed. Railings on the stairs and vault were also provided as additional safety measures.

- **RW-100 Structural supports**: The structural supports for the electrical panels at RW-100 were constructed of 1.5 inch Unistrut rather than the 3" x 3" hollow structural sections. An angled brace was added to the vertical supports, located 18 inches up and 18 inches out from the base.

- **Washing and rinsing of electrical components and piping:** This was not required because the materials removed did not include piping that contained contaminated groundwater.

SECTION 3
WASTE MANAGEMENT REPORT

EnSafe and its subcontractors managed, coordinated, and directed waste management activities including loading, removal, transportation, and proper disposal at Lockheed Martin-approved scrap and construction/demolition waste facilities in accordance with the Project-Specific Waste Management Plan; applicable local, state, and federal regulations; and Lockheed Martin procedures. Because waste soils were not generated, NYSDEC approval of disposal facilities was not required.

3.1 WASTES GENERATED

Generated wastes are summarized in the table below.

Waste	Quantity	Disposal Facility and Location
Electrical and piping demolition materials (non-metal; non-recyclable)	1 cubic yard box (approximately 700 lbs)[1]	Veolia ES Technical Solutions Flanders, New Jersey, with final disposal at Environmental Recovery Corporation Lancaster, Pennsylvania
Excess plastic and conduit (non-recyclable)		
Asphalt	1 cub yard box (approximately 500 lbs)	
Electrical and piping demolition materials (metal, recyclable)	2,000 lbs	Arrow Scrap West Babylon, New York
Excess Soil	Excess soils were not generated; excavated materials from the RW-100 vault and installation of stairs at OU2 were regraded onsite.	
Water	There were no water wastes generated from this work.	

Notes:

[1] Because this waste shipped for final disposal with soil waste from a concurrent project on the Site, this waste was shipped under manifest as "non-hazardous soil" even though a profile was established for "non-hazardous metal and debris."

Wastes were handled and managed in accordance with NYSDEC guidance and regulations, including New York Codes, Rules and Regulations Part 375, and applicable United States Department of Transportation, United States Environmental Protection Agency, and Resource Conservation and Recovery Act regulations.

3.2 WASTE CHARACTERIZATION

Because waste soils and water were not generated during this work, waste characterization was not required.

3.3 WASTE STORAGE

Wastes were stored in lined cubic yard boxes and located either inside the staging area adjacent to the OU1 GWTS building or inside of the Main SSDS building, pending approvals for off-site disposal.

3.4 DOCUMENTATION

Waste management documentation including chain of custody forms, shipping documents, and facility receipts are provided in Appendix M.

SECTION 4
REFERENCES

AMEC E&E, PC. 100% Revised Design: Operable Units 1 and 2 Extraction/Recovery Well Electrical Upgrades, Former Unisys Facility Great Neck, Village of Lake Success, New York. June 2020a.

_____Startup, Testing, and Commissioning Plan: Operable Units 1 and 2 Extraction/Recovery Well Electrical Upgrades, Former Unisys Facility Great Neck, Village of Lake Success, New York. March 2021

EnSafe, Inc. Work Plan for Operable Units 1 and 2 Groundwater Treatment Systems Extraction/Recovery Well Electrical System Upgrade. March 2021a.

New York State Department of Environmental Conservation. DER-10 Technical Guidance for Site Investigation and Remediation, May 3, 2010.

FIGURES

Figure 1 **Site Location Map**

Figure 2 **Site Plan**

Figure 3 **Site and Temporary Facilities Layout Plan**

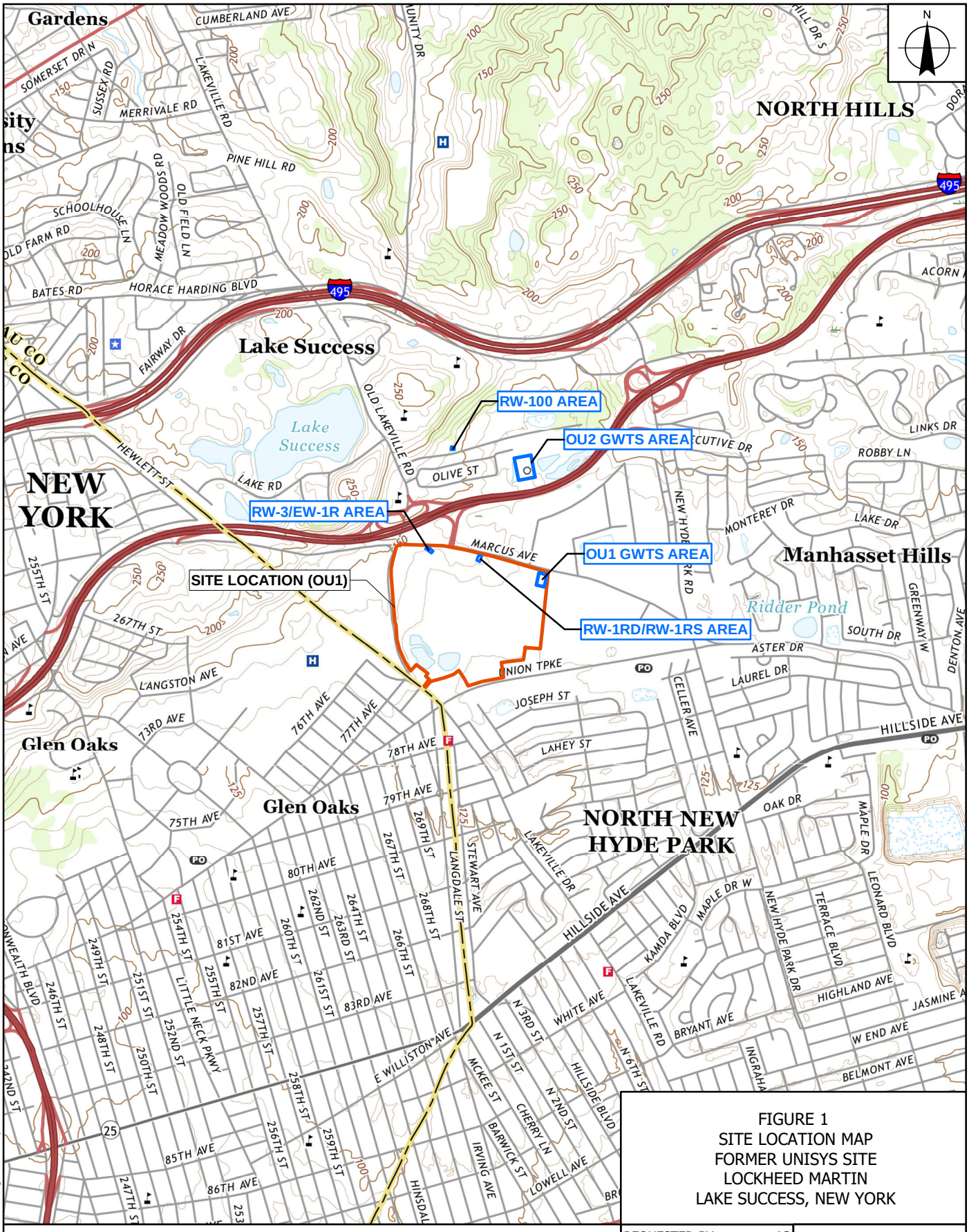

FIGURE 1
SITE LOCATION MAP
FORMER UNISYS SITE
LOCKHEED MARTIN
LAKE SUCCESS, NEW YORK

REQUESTED BY:	AS
DRAWN BY:	NR
DATE:	7/27/2021
PROJECT:	0888827878

ENSAFE
Creative thinking.Custom solutions.
800.588.7962 | www.ensafe.com

Source: U.S. Geological Survey. Sea Cliff & Lynbrook Quadrangles, New York [Map]. Photorevised 2019. 1:24,000. 7.5 Minute Series.

X:\LockheedMartin\GreatNeck\Fig1SiteLocMapV3.mxd



LEGEND

WELL LOCATION

SITE BOUNDARY

GWTS AREAS

NAD 1983 STATE PLANE
NEW YORK LONG ISLAND FEET

0 125 250

SCALE IN FEET

FIGURE 2
SITE PLAN
FORMER UNISYS SITE
LOCKHEED MARTIN
LAKE SUCCESS, NEW YORK

REQUESTED BY:	AS
DRAWN BY:	MS
DATE:	10/19/2020
PROJECT:	0888827878

ENSAFE
Creative thinking.Custom solutions.
800.588.7962 | www.ensafe.com

Source: Google Earth Pro Imagery - 06/26/2019

X:\LockheedMartin\GreatNeck\Fig2SiteMap.mxd



X:\Lockheed\Martin\GreatNeck\Fig6SiteAndTempSitesMap.mxd

LEGEND

- WELL LOCATION
- WORK AREAS WITH TEMPORARY FENCE, AS NEEDED
- WORK AREAS WITH EXISTING FENCING
- SITE BOUNDARY

NAD 1983 STATE PLANE
NEW YORK LONG ISLAND FEET

0 150 300

SCALE IN FEET

FIGURE 3
SITE AND TEMPORARY FACILITIES PLAN
FORMER UNISYS SITE
LOCKHEED MARTIN
LAKE SUCCESS, NEW YORK

REQUESTED BY:	AS
DRAWN BY:	MS
DATE:	10/13/2020
PROJECT:	0888827878

ENSAFE
Creative thinking.Custom solutions.
800.588.7962 | www.ensafe.com

Source: Google Earth Pro Imagery - 06/26/2019

APPENDICES

Appendix A Submittal Register

Appendix B Permits

Appendix C Correspondence with Regulators

Appendix D Daily Reports

Appendix E Weekly Reports

Appendix F Photographs

Appendix G Intrusive Field Work Requirements

Appendix H Health and Safety Documentation

Appendix I Equipment Testing

Appendix J Operation and Maintenance Manuals

Appendix K Quality Control Testing

Appendix L Record Drawings

Appendix M Waste Documentation

APPENDIX A

SUBMITTAL REGISTER

RFI LOG

PROJECT TITLE AND LOCATION: Electrical Upgrades
Former Unisys Site, Lake Success, New York

PROJECT / CONTRACT NO:

LOCKHEED MARTIN MANAGER: Glenda Clark
RTO: CDM Smith
ENGINEER: AMEC E&E, PC
CONTRACTOR: EnSafe

ACTION CODE KEY
1 - REVIEWED - NO COMMENTS
2 - COMMENTS AS NOTED
3 - REVISE & RESUBMIT
4 - DISAPPROVED

SUBMITTAL FORMAT KEY
E - ELECTRONIC
H - HARD COPY CD - COMPACT DISC

Note: Engineer prepares and presents completed columns (a) through (d) to Contractor at Kick-off Meeting. Contractor reviews Columns (c) and (d) to confirm time schedule or inserts actual dates and returns marked-up copy to Engineer within 10 working days. Engineer prepares/maintains for project duration.

No.	SPECIFICATION SECTION	SPECIFICATION PARAGRAPH	SUBMITTED ITEM DESCRIPTION	SUBMITTAL SCHEDULE	CONTRACTOR TRANSMITTAL NUMBER	CONTRACTOR ITEM NUMBER	CONTRACTOR ITEM NAME	MFG OR DESIGNER	SUBMITTAL FORMAT	DATE RECEIVED	REVIEW NEEDED BY	RETURN DATE	REVIEWED BY	ACTION CODE (see key above)	REMARKS
a.	a	b	c	d	e	f	g	h	i	j	k	l	m	n	o
1	E-102; E-501	NA	RFI - OU1 Site Work - Concrete Pad for OU1 Harmonic Filter		RFI-001	1	RFI - OU1 Site Work - Concrete Pad for OU1 Harmonic Filter	AMEC	E	3/8/2021					

SUBMITTAL REGISTER

PROJECT TITLE AND LOCATION: Electrical Upgrades
Former Unisys Site, Lake Success, New York

PROJECT / CONTRACT NO:

Note: Engineer prepares and presents completed columns (a) through (d) to Contractor at Kick-off Meeting. Contractor reviews Columns (c) and (d) to confirm time schedule or inserts actual dates and returns marked-up copy to Engineer within 10 working days. Engineer prepares/maintains for project duration.

LOCKHEED MARTIN MANAGER: Glenda Clark
RTO: CDM Smith
ENGINEER: AMEC E&E, PC
CONTRACTOR: EnSafe

ACTION CODE KEY
1 - REVIEWED - NO COMMENTS
2 - COMMENTS AS NOTED
3 - REVISE & RESUBMIT

SUBMITTAL FORMAT KEY E - ELECTRONIC
H - HARD COPY CD - COMPACT DISC

No.	SPECIFICATION SECTION	SPECIFICATION PARAGRAPH	SUBMITTED ITEM DESCRIPTION	SUBMITTAL SCHEDULE	CONTRACTOR TRANSMITTAL NUMBER	CONTRACTOR ITEM NUMBER	CONTRACTOR ITEM NAME	MFG OR DESIGNER	SUBMITTAL FORMAT	DATE RECEIVED	REVIEW NEEDED BY	RETURN DATE	REVIEWED BY	ACTION CODE (see key above)	REMARKS
a.	a	b	c	d	e	f	g	h	i	j	k	l	m	n	o
1	NA	NA	Electrical License		00000-1	1	NA	NA	E	11/4/2020		11/12/2020	AMEC	1	
2	NA	NA	Misc. Electrical Equipment		0000-02	1	NA	Multiple	E	12/4/2020		12/21/2020	AMEC	1	
3	NA	NA	Vault Heaters		0000-03	1	NA	Chromolox	E	12/14/2020		12/21/2020	AMEC	1	
4	NA	NA	Concrete Pad for OU1 Harmonic Filter		0000-04	1	NA	EnviroTrac	E	3/24/2021		3/29/2021	AMEC	2	
5	01010	1.10.B	Construction schedule with Bid	Prior to starting work			Part of Construction Work Plan	EnSafe	E				CDM Smith	1	
6	01010	1.10.B	Updated schedule	Updated on a monthly basis	NA	NA	NA	NA	NA	NA	NA	NA	NA	NA	Tracked during weekly conference calls and through LMC master schedule.
7	01010	1.11.A	Updated Construction Work Plan	Prior to starting work				EnSafe	E				CDM Smith	1	
8	01060	1.1.C	Certificates of inspection and approvals	When received and prior to closeout	NA	NA	NA	NA	NA	NA	NA	NA	NA	NA	UL Inspections provided with Construction Completion Report
9	01200	1.1.A	Construction Schedule and Project Organization chart	Pre-construction conference	01200-01	1	Schedule and Org. Chart	NA	E	2/9/21			CDM Smith	1	
10	01300	2.1.A	List of Submittals	Within 10 days after contract is awarded. Includes all products incorporated in the work.											Provided by AMEC as submittal register
11	01300	2.1.C.8	Contractor's health and safety plan		01300-01	1	Health and Safety Plan	NA	E	2/9/21			CDM Smith	1	
12	01400	1.2.A	Manufacturer and Materials List	Upon approval of the manufacturer	NA	NA	NA	NA	NA	NA	NA	NA	NA	NA	Addressed through approvals of individual equipment submittals
13	01700	1.1.B	Warranties and guarantees	Upon completion of work											
14	01700	1.1.C	Project record documents	Upon completion of work	NA	NA	NA	NA	NA	NA	NA	NA	NA	NA	Received as part of Construction Completion Report
15	01700	1.2.A	Written certification of completion	When contractor considers work substantially complete.	NA	NA	NA	NA	NA	NA	NA	NA	NA	NA	Coordinated as part of weekly meetings
16	01700	1.2.B	Submit certification for reinspection	If work was reported incomplete, after contractor remedies deficiencies	NA	NA	NA	NA	NA	NA	NA	NA	NA	NA	Coordinated with Tom Whitacre for reinspection
17	01781	1.4.A	Initial Submittal of operational manuals	At least 15 days before inspection for Substantial Completion.	NA	NA	NA	NA	NA	NA	NA	NA	NA	NA	Some preliminary versions with other submittals. Received as part of Construction Completion Report
18	01781	1.4.B	Final Submittal of operational manuals	At least 10 days before final inspection.	NA	NA	NA	NA	NA	NA	NA	NA	NA	NA	Received as part of Construction Completion Report
19	02225	1.3.A	Proposed Dust Control Measures		02225-1	1	NA	NA	E	11/20/20		12/10/20	AMEC	2	
20	02225	1.3.B.1, 1.3.B.5	Sequence of selected demolition and removal work		02225-1	2	NA	NA	E	11/5/20		11/12/20	AMEC	1	
21	02225	1.3.B.2, 1.3.C	Inventory list of removed existing equipment not reused in contract work		02225-1	3	NA	NA	E	11/5/20		11/12/20	AMEC	2	
22	02225	1.3.B.3	Interrupted utility service		02225-1B	4	NA	NA	E	1/4/21		1/7/21	AMEC	1	
23	02225	1.3.B.4	coordination for shutoff, capping, and continuation of utility services		NA	NA	NA	NA	NA	NA	NA	NA	NA	NA	Not applicable, no public utility connections affected
24	02225	3.1.D	Detailed written reports for unanticipated conflicts with intended function or design that delay schedule	As soon as conflicts identified	NA	NA	NA	NA	NA	NA	NA	NA	NA	NA	Conflict with stairs submitted upon identification and resolved by email/sketches with reorientation of direction
25	02250	1.5.B	Disposal Facility Information	Prior to disposal	NA	NA	NA	NA	NA	NA	NA	NA	NA	NA	Coordinated with LMC - not handled through the submittal process (scrap metal and asphalt only)
26	02250	1.5.D	Waste profile	Prior to disposal		NA	NA	NA	NA	NA	NA	NA	NA	NA	Coordinated with LMC - not handled through the submittal process (scrap metal and asphalt only)
27	02250	1.5.E	Transportation Management plan		02250-01	1	Schedule and Org. Chart	NA	E	2/9/21			CDM Smith	1	
28	02250	1.5.G	Copies of Weigh Tickets provided by disposal facility	Prior to project completion	NA	NA	NA	NA	NA	NA	NA	NA	NA	NA	Manifests included in Construction Completion Report
29	02290	1.3.A	Product data - Silt Fence	minimum of one week prior to installation	02290-1	1	NA	Tenax	E	11/5/20		11/12/20	AMEC	2	
30	02290	1.3.A	Product Data - Catch Basin Inserts	minimum of one week prior to installation	NA	NA	NA	NA	NA	NA	NA	NA	NA	NA	Walked site to confirm no catch basins in drainage of RW-100 work
31	02316	1.4.A.1.a	Modifications to work due to intended excavation plan		02316-1C	1	NA	NA	E	1/4/21		1/7/21	AMEC	2	
32	02316	1.4.A.1.b, 2.1.B.1	Fill Material Gradations		02316-1	2	NA	Advanced Testing	E	12/4/20		12/10/20	AMEC	2	
33	02316	1.4.A.1.c	Laboratory Compaction Tests	Prior to excavation	02316-4	1	Proctor Test	NA	E	3/31/21		4/1/21	AMEC	2	
34	02316	1.5.B	Plan for underground facilities loads	Prior to heavy equipment	NA	NA	NA	NA	NA	NA	NA	NA	NA	NA	Not required based on installation plans
35	2316	2.1.A	Off-site general fill proposal		02316-2	2	NA	NA	E	11/5/2020		11/12/2020	AMEC	2	

SUBMITTAL REGISTER

PROJECT TITLE AND LOCATION: Electrical Upgrades
Former Unisys Site, Lake Success, New York

PROJECT / CONTRACT NO:

Note: Engineer prepares and presents completed columns (a) through (d) to Contractor at Kick-off Meeting. Contractor reviews Columns (c) and (d) to confirm time schedule or inserts actual dates and returns marked-up copy to Engineer within 10 working days. Engineer prepares/maintains for project duration.

LOCKHEED MARTIN MANAGER: Glenda Clark
RTO: CDM Smith
ENGINEER: AMEC E&E, PC
CONTRACTOR: EnSafe

ACTION CODE KEY
1 - REVIEWED - NO COMMENTS
2 - COMMENTS AS NOTED
3 - REVISE & RESUBMIT

SUBMITTAL FORMAT KEY E - ELECTRONIC
H - HARD COPY CD - COMPACT DISC

No.	SPECIFICATION SECTION	SPECIFICATION PARAGRAPH	SUBMITTED ITEM DESCRIPTION	SUBMITTAL SCHEDULE	CONTRACTOR TRANSMITTAL NUMBER	CONTRACTOR ITEM NUMBER	CONTRACTOR ITEM NAME	MFG OR DESIGNER	SUBMITTAL FORMAT	DATE RECEIVED	REVIEW NEEDED BY	RETURN DATE	REVIEWED BY	ACTION CODE (see key above)	REMARKS
a.	a	b	c	d	e	f	g	h	i	j	k	l	m	n	o
36	03301	NA	Product Data and Mix Design		03301-1	1	NA	Enviro. Trac	E	12/3/2020		12/10/2020	AMEC	2	
37	13410	1.1.C	Schedule for sequence of construction	Included in work plan				EnSafe	E				CDM Smith	1	
38	13410	1.1.E	Warranty certificates	Submitted along with O&M manuals. Prior to Startup											None provided?
39	13410	1.1.F	Spare parts and test equipment	Prior to project completion											Spare Air Filters Provided?
40	13410	1.2.A.1	Controls Integrator Qualifications		13410-1	1	NA	Eagle	E	11/5/2020		11/12/2020	AMEC	1	
41	13410	1.2.A.2	Controls Integration Project Plan		13410-1	1	NA	Multiple	E	11/5/2020		11/12/2020	AMEC	1	
42	13410	1.2.A.3	Control Product data		13410-2A	1	NA	Multiple	E	1/8/2021		1/11/2021	AMEC	1	
43	13410	1.2.A.4	Controls Wiring Diagrams		13410-2A	1	NA	Eagle	E	1/8/2021		1/11/2021	AMEC	1	
44	13410	1.2.A.5	Digital Equipment Layouts		13410-2A	1	NA	Eagle	E	1/8/2021		1/11/2021	AMEC	1	
45	13410	1.2.A.6	Software Programs		13410-03	1	NA	Eagle	E	2/15/2021		2/19/2021	AMEC	1	
46	13410	1.2.A.7	Programmable Logic Controller I/O details		13410-2A	1	NA	Eagle	E	1/8/2021		1/11/2021	AMEC	1	
47	13410	1.2.A.8	SCADA Screens		13410-03	1	NA	Eagle	E	2/15/2021		2/19/2021	AMEC	1	
48	13410	1.2.A.9	Data Collection Details	Prior to completion	NA	NA	NA	NA	NA	NA	NA	NA	NA	NA	Not applicable. Data management as part of SCADA already established at the site
49	13410	1.2.A.10	Data Management and Reporting Details	Prior to completion	NA	NA	NA	NA	NA	NA	NA	NA	NA	NA	Not applicable. Data management as part of SCADA already established at the site
50	13410	1.2.A.11	Spare Parts List	Prior to project completion											
51	13410	1.2.B	Record drawings	Prior to project completion	NA	NA	NA	NA	NA	NA	NA	NA	NA	NA	Markups provided with Construction Completion Report
52	13410	1.2.C	Operation and Maintenance Manuals	Prior to startup	NA	NA	NA	NA	NA	NA	NA	NA	NA	NA	Markups provided with Construction Completion Report
53	13410	1.2.D	Warranty certificate	Prior to project completion											
54	13419	1.3.A	Submersible Level Transmitters Product Data		13419-02	1	NA	PMC ENGINEERING	E	1/25/2021		1/28/2021	AMEC	1	
55	13419	1.3.B	Submersible Level Transmitters Installation Instructions		13419-02	1	NA	PMC ENGINEERING	E	1/25/2021		1/28/2021	AMEC	1	
56	13419	1.3.D	Submersible Level Transmitters O&M Manuals	Prior to installation	NA	NA	NA	NA	NA	NA	NA	NA	NA	NA	Provided with Construction Completion Report submittal
57	13419	3.1.B	Transmitter calibration certificates	Prior to installation											
58	13430	2.2 A	Panel Drawings and Product Data	Prior to installation	13430-01A	2	NA	Multiple	E	1/22/2021		1/28/2021	AMEC	1	
59	13430	2.6 A	Panel Drawings and Product Data	Prior to installation	13430-01A	2	NA	Multiple	E	1/22/2021		1/28/2021	AMEC	1	
60	13430	2.5 M	Panel Drawings and Product Data	Prior to installation	13430-01A	2	NA	Multiple	E	1/22/2021		1/28/2021	AMEC	1	
61	13450	1.2	PLC Shop Drawings and Product Data	Prior to installation	13450-01A	3	NA	Eagle Controls	E	12/4/2020		12/21/2020	AMEC	1	
62	13600	1.1.C	Pretest equipment documentation	Submit documentation prior to formal field tests											
63	13600	1.2.A, 1.2.B	Start-up, Test, and Commissioning Plan	Provided by AMEC	NA	NA	NA	NA	NA	NA	NA	NA	NA	NA	Scheduling to coordinate testing was discussed and coordinated during weekly meetings
64	13600	1.2.C	Initial test procedure submittal	Prior to startup	NA	NA	NA	NA	NA	NA	NA	NA	NA	NA	
65	13600	1.2.D	Test sign-off forms	To be submitted within ten days post after testing is completed	NA	NA	NA	NA	NA	NA	NA	NA	NA	NA	Supplier reports for Active Filter and AMEC checklists provided for Construction Completion Report
66	13600	1.2.E	Document loop checks on loop drawings	Upon completion of tests	NA	NA	NA	NA	NA	NA	NA	NA	NA	NA	Not applicable
67	13600	1.2.F	Loop tuning documentation	Upon completion of tuning	NA	NA	NA	NA	NA	NA	NA	NA	NA	NA	Not applicable
68	13600	1.2.G	Strategy Tests documentation	Upon completion of tests	NA	NA	NA	NA	NA	NA	NA	NA	NA	NA	AMEC startup checklist provided for Construction Completion Report
69	13600	1.2.H	Function tests documentation	Upon completion of tests	NA	NA	NA	NA	NA	NA	NA	NA	NA	NA	AMEC startup checklist provided for Construction Completion Report
70	13600	1.2.I	Failed test resulted	Upon completion of tests	NA	NA	NA	NA	NA	NA	NA	NA	NA	NA	PES Lead Operator involved in testing
71	13600	3.1.K	Owners' testing participation	Written documentation with 24-hours describing Owner action and impact	NA	NA	NA	NA	NA	NA	NA	NA	NA	NA	PES Lead Operator involved in testing

SUBMITTAL REGISTER

PROJECT TITLE AND LOCATION: Electrical Upgrades
Former Unisys Site, Lake Success, New York

PROJECT / CONTRACT NO:

Note: Engineer prepares and presents completed columns (a) through (d) to Contractor at Kick-off Meeting. Contractor reviews Columns (c) and (d) to confirm time schedule or inserts actual dates and returns marked-up copy to Engineer within 10 working days. Engineer prepares/maintains for project duration.

LOCKHEED MARTIN MANAGER: Glenda Clark
RTO: CDM Smith
ENGINEER: AMEC E&E, PC
CONTRACTOR: EnSafe

ACTION CODE KEY
1 - REVIEWED - NO COMMENTS
2 - COMMENTS AS NOTED
3 - REVISE & RESUBMIT

SUBMITTAL FORMAT KEY E - ELECTRONIC
H - HARD COPY CD - COMPACT DISC

No.	SPECIFICATION SECTION	SPECIFICATION PARAGRAPH	SUBMITTED ITEM DESCRIPTION	SUBMITTAL SCHEDULE	CONTRACTOR TRANSMITTAL NUMBER	CONTRACTOR ITEM NUMBER	CONTRACTOR ITEM NAME	MFG OR DESIGNER	SUBMITTAL FORMAT	DATE RECEIVED	REVIEW NEEDED BY	RETURN DATE	REVIEWED BY	ACTION CODE (see key above)	REMARKS
a.	a	b	c	d	e	f	g	h	i	j	k	l	m	n	o
72	13600	3.6.A	Integrated systems tests	Can only occur after other testing has been completed specified in Specification 13600	NA	NA	NA	NA	NA	NA	NA	NA	NA	NA	AMEC startup checklist provided for Construction Completion Report
73	13700	1.2.B.1	Data sheets and catalog literature	Prior to installation	13700-01	1	NA	Allen Bradley	E	12/4/2020		12/21/2020	AMEC	1	
74	13700	1.2.B.2	Software system overview	Prior to installation	13700-01	1	NA	Allen Bradley	E	12/4/2020		12/21/2020	AMEC	1	
75	13700	1.2.B.3	Description of each system major component	Not Required	NA	NA	NA	NA	NA	NA	NA	NA	NA	NA	
76	13700	1.2.C thru 1.2.G	PLC Control strategy, HMI, Alarms, etc.	Not Required	NA	NA	NA	NA	NA	NA	NA	NA	NA	NA	
77	13700	2.4.B	Detail Display content	Not Required	NA	NA	NA	NA	NA	NA	NA	NA	NA	NA	
78	16050	1.2.A	Shop Drawing and Product Data	Upon completion of tests	16050-01	1	NA	Wheatland	E	12/4/2020		12/21/2020	AMEC	1	
79	16050	1.2.B	Location Drawings	Not Required	NA	NA	NA	NA	NA	NA	NA	NA	NA	NA	
80	16050	1.2.C	O&M Manuals	Prior to startup	NA	NA	NA	NA	NA	NA	NA	NA	NA	NA	Provided with Construction Completion Report submittal
81	16050	1.3.A	Record Documents	Upon completion of work	NA	NA	NA	NA	NA	NA	NA	NA	NA	NA	Markups provided with Construction Completion Report submittal
82	16050	1.3.B	Data Sheets on motor control circuits	Upon completion of work	NA	NA	NA	NA	NA	NA	NA	NA	NA	NA	Not applicable. No new motors provided in the scope.
83	16050	1.5.A.1	Certificates of Inspection	Upon completion of work	NA	NA	NA	NA	NA	NA	NA	NA	NA	NA	UL Inspections provided with Construction Completion Report as required by local jurisdiction
84	16060	1.2.A	Grounding Product Data	Prior to construction at RW-100	NA	NA	NA	NA	NA	NA	NA	NA	NA	NA	Grounding determined by AMEC during construction and documented on record drawings
85	16070	1.2.A	Supporting Devices Product Data	Submitted under 16050	16050-01	1	NA	Wheatland	E	12/4/2020		12/21/2020	AMEC	1	
86	16075	1.2.A	Electrical Identification Product Data	Prior to label installation	NA	NA	NA	NA	NA	NA	NA	NA	NA	NA	Labels were included and reviewed as part of the panel drawing submittal
87	16120	1.2.A	Wire and Cable Shop Drawings - Supports	Prior to installation	16120-03	1	NA	Mcmaster	E	1/25/2021		1/28/2021	AMEC	1	Actual submittal was for unistrut supports.
88	16120	1.2.A	Wire and Cable Shop Drawings - Conduit and Wires	Prior to installation	16120-02	1	NA	Wheatland	E	1/8/2021		1/11/2021	AMEC	2	
89	16120	1.2.C, 3.1.A	Certified copy of Megohm meter tests	Prior to startup											
90	16120	1.2.C, 3.1.B	Net cable documentation	Submitted within 30 days at the conclusion of the project	NA	NA	NA	NA	NA	NA	NA	NA	NA	NA	After investigation, no installation of new fiberoptic cable required.
91	16120	1.2.C, 3.1.C	non-LAN cable reports	Upon completion	NA	NA	NA	NA	NA	NA	NA	NA	NA	NA	After investigation, no installation of new fiberoptic cable required.
92	16125	1.4.B.1	Fiber Optic Site Layout Diagram	Prior to installation	NA	NA	NA	NA	NA	NA	NA	NA	NA	NA	After investigation, no installation of new fiberoptic cable required.
93	16125	1.4.B.2	Fiber Optic Cable Schedule	Prior to installation	NA	NA	NA	NA	NA	NA	NA	NA	NA	NA	After investigation, no installation of new fiberoptic cable required.
94	16125	1.4.B.3	Fiber Optic Component Data	Prior to installation	16125-01	1	NA	Phoenix Contact	E	12/4/2020		12/21/2020	AMEC	2	
95	16125	1.4.C.1	Fiber Optic Certification of Installer	Upon completion of installation	NA	NA	NA	NA	NA	NA	NA	NA	NA	NA	After investigation, no installation of new fiberoptic cable required.
96	16125	1.4.C.2	Fiber Optic Subcontractor Qualifications	Prior to installation	13410-1	1	NA	Eagle	E	11/5/2020		11/12/2020	AMEC	1	Approved as part of integrator qualifications
97	16125	1.4.C.3	Fiber Optic Manufacturers Cert of Compliance	Upon Completion	NA	NA	NA	NA	NA	NA	NA	NA	NA	NA	No fiberoptic cable, switches only, confirm?
98	16125	1.4.C.2	Fiber Optic Installation Practice	Prior to installation	NA	NA	NA	NA	NA	NA	NA	NA	NA	NA	No fiberoptic cable, switches only, confirm?
99	16125	1.4.C.2	Fiber Optic Testing	Upon completion of tests	NA	NA	NA	NA	NA	NA	NA	NA	NA	NA	No fiberoptic cable, switches only, confirm?
100	16125	1.4.C.2	Fiber Optic O&M Data	Prior to testing	NA	NA	NA	NA	NA	NA	NA	NA	NA	NA	No fiberoptic cable, switches only, confirm?
101	16125	3.3.C	Cable Testing Results	Upon completion of tests	NA	NA	NA	NA	NA	NA	NA	NA	NA	NA	No fiberoptic cable, switches only, confirm?
102	16130	1.2.A	Conduit and conduit body product data	Prior to installation	16050-01	1	NA	Wheatland	E	12/4/2020		12/21/2020	AMEC	1	
103	16135	1.2.A.1	Cabinets, Boxes, and Fittings Shop Drawings	Prior to installation	16050-01	1	NA	Wheatland	E	12/4/2020		12/21/2020	AMEC	1	
104	16135	1.2.A.2	Cabinets, Boxes, and Fittings Product Data	Prior to installation	16050-01	1	NA	Wheatland	E	12/4/2020		12/21/2020	AMEC	1	
105	16151	1.3.A.1	VFD Shop Drawings	Prior to installation	16151	1	NA	ABB	E	1/8/2021		1/11/2021	AMEC	1	
106	16151	1.3.A.2	VFD Service Office Info	Prior to project completion	NA	NA	NA	NA	NA	NA	NA	NA	NA	NA	Allen Bradley as specified, same as for RW-3

SUBMITTAL REGISTER

PROJECT TITLE AND LOCATION: Electrical Upgrades
Former Unisys Site, Lake Success, New York

PROJECT / CONTRACT NO:

Note: Engineer prepares and presents completed columns (a) through (d) to Contractor at Kick-off Meeting. Contractor reviews Columns (c) and (d) to confirm time schedule or inserts actual dates and returns marked-up copy to Engineer within 10 working days. Engineer prepares/maintains for project duration.

LOCKHEED MARTIN MANAGER: Glenda Clark
RTO: CDM Smith
ENGINEER: AMEC E&E, PC
CONTRACTOR: EnSafe

ACTION CODE KEY
1 - REVIEWED - NO COMMENTS
2 - COMMENTS AS NOTED
3 - REVISE & RESUBMIT

SUBMITTAL FORMAT KEY E - ELECTRONIC
H - HARD COPY CD - COMPACT DISC

No.	SPECIFICATION SECTION	SPECIFICATION PARAGRAPH	SUBMITTED ITEM DESCRIPTION	SUBMITTAL SCHEDULE	CONTRACTOR TRANSMITTAL NUMBER	CONTRACTOR ITEM NUMBER	CONTRACTOR ITEM NAME	MFG OR DESIGNER	SUBMITTAL FORMAT	DATE RECEIVED	REVIEW NEEDED BY	RETURN DATE	REVIEWED BY	ACTION CODE (see key above)	REMARKS
a.	a	b	c	d	e	f	g	h	i	j	k	l	m	n	o
107	16151	1.3.A.3	VFD Installation and Anchoring	Prior to installation	16151	1	NA	TCI	E	1/8/2021		1/11/2021	AMEC	1	
108	16151	1.3.A.4	VFD Installation Instructions	Prior to startup	NA	NA	NA	NA	NA	NA	NA	NA	NA	NA	Installation, Operation, & Maintenance Manuals provided with Construction Completion Report
109	16151	1.3.A.5	VFD Spare Parts List	Prior to project completion											
110	16151	1.3.A.6	VFD O&M Manuals	Prior to startup	NA	NA	NA	NA	NA	NA	NA	NA	NA	NA	Installation, Operation, & Maintenance Manuals provided with Construction Completion Report
111	16151	1.3.A.7	VFD Confirmation of conduit and wire size	Prior to conduit installation	16120-02	1	NA	Wheatland	E	1/8/2021		1/11/2021	AMEC	2	
112	16151	1.3.A.8	VFD Evaluation of ground path	Prior to installation											
113	16151	3.3.C	Final test report	At project completion											
114	16280	1.3.A	Surge Protection Device Shop Drawings	Prior to installation	13430-01A	2	NA	Multiple	E	1/22/2021		1/28/2021	AMEC	1	
115	16280	1.3.B	Surge Protection Device Product Data	Prior to installation	13430-01A	2	NA	Multiple	E	1/22/2021		1/28/2021	AMEC	1	
116	16280	1.3.C	Surge Protection Device Installation Instructions	Not Required	NA	NA	NA	NA	NA	NA	NA	NA	NA	NA	
117	16280	1.3.D	Surge Protection Device O&M Data	Not Required	NA	NA	NA	NA	NA	NA	NA	NA	NA	NA	
118	16280	1.3.E	Surge Protection Device Warranties	Prior to project completion	13430-01A	2	NA	Multiple	E	1/22/2021		1/28/2021	AMEC	1	
119	16410	1.3	Circuit and Motor Disconnect Shop Drawings	Prior to installation	16410-02A	1	NA	Multiple	E	2/11/2021		2/15/2021	AMEC	1	
120	16410	1.3.H	Circuit and Motor Disconnect Manuals	Prior to startup	NA	NA	NA	NA	NA	NA	NA	NA	NA	NA	Submittal information included in Construction Completion Report appendix.
121	16463	1.3.A	Small Power Center Data	Upon completion of tests	16463-02	1	NA	Multiple	E	2/2/2021		12/21/2020	AMEC	2	
122	16463	1.3.B	Small Power Center Shop Drawings	Upon completion of tests	16463-02	1	NA	Multiple	E	2/2/2021		12/21/2020	AMEC	2	
123	16470	1.4.A.1	Active Harmonic Filter Shop Drawings	Prior to shipping	16470-01A	1	NA	TCI	E	1/4/2021		1/7/2021	AMEC	1	
			Active Harmonic Filter Shop Drawings	Prior to shipping	16470-01B	1	NA	HPS	E	1/14/2021		2/3/2021	AMEC	1	
124	16470	1.4.A.2	Active Harmonic Filter Manuals	Prior to installation	NA	NA	NA	NA	NA	NA	NA	NA	NA	NA	Manuals provided in construction completion report Appendix
125	16470	1.4.A.3	Active Harmonic Filter Certification	Two weeks prior to final inspection	NA	NA	NA	NA	NA	NA	NA	NA	NA	NA	Testing reports provided in construction completion report appendix

APPENDIX B

PERMITS

BUILDING PERMIT

VILLAGE OF LAKE SUCCESS

318 Lakeville Road Great Neck, N.Y. 11020

hereby issues permit for project as described herein:

Permit No. **20-106A**

Permit Valid Until: **8/5/2021**

Issued Date: **8/5/2020**

Zoning

Project Value: **$200,000.00**

Location of Property: **1111 MARCUS AVE**

Type of Permit: **Commercial Utility**

Tax Parcel ID: **008-B18.0000-300-00H**

Fee: **$3,500.00**

Owner: **I.PARK, LAKE SUCCESS**

1111 Marcus Avenue
Lake Success, NY 11042

Applicant: **LOCKHEED MARTIN CORPORATION**
STUART PEARSON/AMEC
214-45 42nd AVENUE STE
BAYSIDE, NY 11361

Description Of Work

ELECTRICAL UPGRADE TO RECOVERY WELL AT THE LOCKHEED SITE; JOB CODE: 3617197453.05.5A **WORK INVOLVE THE RELOCATION OF ELECTRICAL COMPONENTS IN EXTRACTION WELL VAULTS TO ABOVE-GRADE, ADDITION OF VARIABLE FREQUENCY DRIVES, AND REPLACEMENT OF CORRODED ELECTRICAL COMPONENTS. ACTIVE FILTERS TO REDUCE HARMONICS WILL BE ADDED.

It is the responsibility of the Owner/Occupant and/or Contractor to comply with all applicable ordinances. Notification requests for inspection must be made at least 24 hours in advance to the number shown below. Voice mail requests for inspection will not be scheduled. YOU MUST HAVE YOUR BUILDING PERMIT NUMBER AVAILABLE when calling for any inspections or inquiries.

Comments:

PROJECT MUST BE SELF-CERTIFIED BY ARCHITECT/ENGINEER
**THREE PERMITS FOR THREE PROPERTIES ON PROJECT ARE:
~PERMIT #20-106A: 8-B18-300H MARCUS CONDOMINIUM ASSOCIATION @ 1111 MARCUS AVENUE
~PERMIT #20-106B: 8-G-105 GREAT NECK SCHOOL DISTRICT @ 345 LAKEVILLE ROAD
~PERMIT #20-106C: 8-G-132 MANHASSET LAKEVILLE WATER DISTRICT @ 170 SHORE ROAD

You must call for the following inspections:

1. misc. Inspec - 2. final -

Contractor(s):

Architect:

Robert S. Bonnie, Supt. Building Dept.

Town of North Hempstead
Building Department
Plumbing Division

For start of work notification and/or to schedule appointments

PLEASE CALL/EMAIL

Kerry Johnson
(516) 869-7826
or
johnsonk@northhempsteadny.gov

Call between the hours of 7:00 A.M. and 2:30 P.M.

Permit # 2021 0998

1. No work is to be started until Building Department is notified.
2. You must call for each inspection.
3. The hours of all construction activities, including site work, demolition, construction, alterations, or repairs shall be between 7:30 A.M. and 6:00 P.M., Monday thru Friday only. No work shall be permitted outside the stated hours without the specific written approval from the Building Commissioner.

PLEASE NOTE IF THIS APPLICATION REQUIRES A GAS TEST THE LICENSED PLUMBER ON RECORD HAS TO CALL FOR THE INSPECTION.

RESIDENTIAL

Required locations for smoke alarms:

1. Smoke alarms shall be installed in each sleeping room (bedroom)
2. Smoke alarms shall be installed in the immediate vicinity of bedrooms (hallways within 15 feet of bedrooms)
3. Smoke alarms shall be installed on each additional story of the dwelling including basements and cellars (not uninhabitable attics or crawlspaces).

Required locations for carbon monoxide alarms:

1. Carbon monoxide alarms shall be installed in the immediate vicinity of bedrooms (hallways within 15 feet of bedrooms).
2. Carbon monoxide alarms shall be installed on each level of the dwelling including basements and cellars (not uninhabitable attics or crawlspaces).

Town of North Hempstead

Department of Building Safety, Inspection & Enforcement

210 Plandome Road, Manhasset, NY 11030-2326 • Tel. 516-869-6311 • Fax 516-869-7662

www.northhempsteadny.gov

APPLICATION FOR ELECTRICAL EQUIPMENT INSTALLATION

(To be utilized for emergency back-up power, electric car charging and similar electrical equipment)

Application No. №20,100729

Permit No. 20210998

MECH

Commercial [X] Residential [ ]

Section: 8 **Block:** B18 **Lot(s):** 300.1 **Zoning District:** 1-A **Date** 9/23/19

ADDRESS OF PERMIT ACTIVITY: 1111 Marcus Ave.

City: Lake Success **State:** NY **Zip:** 11042

DESCRIPTION OF WORK:

PROPERTY OWNER'S CURRENT ADDRESS:

First Name: Peter Last Name: McLean License # NA

Business / Corp Name: KeyPoint Partners (representing 1111 Marcus Condominium Association)

Current Home/Corp Address: 1111 Marcus Ave., Suite M23 City: Lake Success State: NY Zip: 11042

Cell # 516-242-0825 Bus / Home # 516-268-8862 Fax #

PMCclean@KeyPointPartners.com

APPLICANT: On behalf of Lockheed Martin Corporation Stuart.Pearson@amecfw.com

First Name: Stuart Last Name: Pearson License # NA

Business / Corp Name: AMEC E&E, P.C.

Current Home/Corp Address: 214-25 42nd Avenue, Suite 3R City: Bayside State: NY Zip: 11361

Cell # 207-776-4251 Bus / Home # 207-828-3426 Fax # 207-772-4762

CONTRACTOR:

First Name: to be determined Last Name: License #

Business / Corp Name:

Current Home/Corp Address: City: State: Zip:

Cell # Bus / Home # Fax #

ELECTRICIAN:

First Name: to be determined Last Name: License #

Business / Corp Name:

Current Home/Corp Address: City: State: Zip:

Cell # Bus / Home # Fax #

No errors, omissions or oversight on the part of the Plan Examiner shall release the design professional, applicant, and/or owner of the responsibility to comply with all the requirements of the NYS Building Code, Zoning Laws of the Town of North Hempstead, and all other applicable codes and standards of jurisdictions having authority over the work.

APPROVED

MAR 06 2020

M. MARACIC

Town of North Hempstead

Department of Building Safety, Inspection & Enforcement

210 Plandome Road, Manhasset, NY 11030-2326 • Tel. 516-869-6311 • Fax 516-869-7662
www.northhempsteadny.gov

OWNER'S AUTHORIZATION

I (we) hereby certify that:

1. I (we) agree to permit the Building Inspector and any officer or employee of the Town of North Hempstead to enter upon the premises in the discharge of their duties with this application.
2. Approved plans and a copy of the approved permit shall remain on the premises at all times until a Certificate of Completion is issued. These plans shall be made available to the Building Inspector upon request.
3. Building Inspector shall be given a minimum forty-eight (48) hours notice to make the required inspection and no work shall continue until such inspection has been completed and approved.
4. Owner or his/her representative shall be responsible to arrange for all required inspections.
5. Owner shall be responsible for the presence of the appropriate representative for the required inspection as directed by the Building Inspector.
6. Permit shall expire three (3) months from the date of issuance unless construction is in progress. No work is to be started until permit has been received and posted by the owner / applicant. Commencement of any work prior to the receipt and posting of the permit will result in the assessment of double fees penalties pursuant to §2-28 C of the Code of the Town of North Hempstead
7. Work shall be permitted between the hours of 7:30 AM and 6:00 PM, Monday through Friday only.
8. Occupancy or use of the premises without first obtaining Certificate of Completion / Approval is unlawful and may subject the owner of the premises to the penalties described in the Code of the Town of North Hempstead.

I Peter McLean (Property Owner) deposes and says that he/she resides at 1111 Marcus Ave., North Hempstead in the State of NY, that he/she is the owner in fee of all certain lots, parcel of land shown on the attached survey, Section 8 Block B18 Lot (s) 300H situated, lying and being within the unincorporated area of the Town of North Hempstead; that I/we have read and understand items one (1) through nine (8) as here in stated, recognize that he/she is responsible for all activities occurring on the property, and that failure to comply with any of the items, not withstanding any other items defined in the Code of the Town of North Hempstead, may result in the temporary suspension or permanent revocation of the permits issued for construction on the premises in accordance with the Code of the Town of North Hempstead.

{Signature of Property Owner _____

{Sworn to me this 16th Day of December, 2023
{Signature of Notary Public: _____

HELEN SCHEUERMAN
Notary Public, State of New York
No. 01SC6331166
Qualified In Queens County
Commission Expires October 5, 2023

FOR OFFICIAL USE ONLY

Final Survey received _____	
Final Inspection Date _____	**Inspector Signature** _____

Town of North Hempstead
Department of Building Safety, Inspection & Enforcement
210 Plandome Road, Manhasset, NY 11030-2326 • Tel. 516-869-6311 • Fax 516-869-7662
www.northhempsteadny.gov

ATTENTION:

THIS SIGN MUST BE POSTED ON ALL JOB SITES

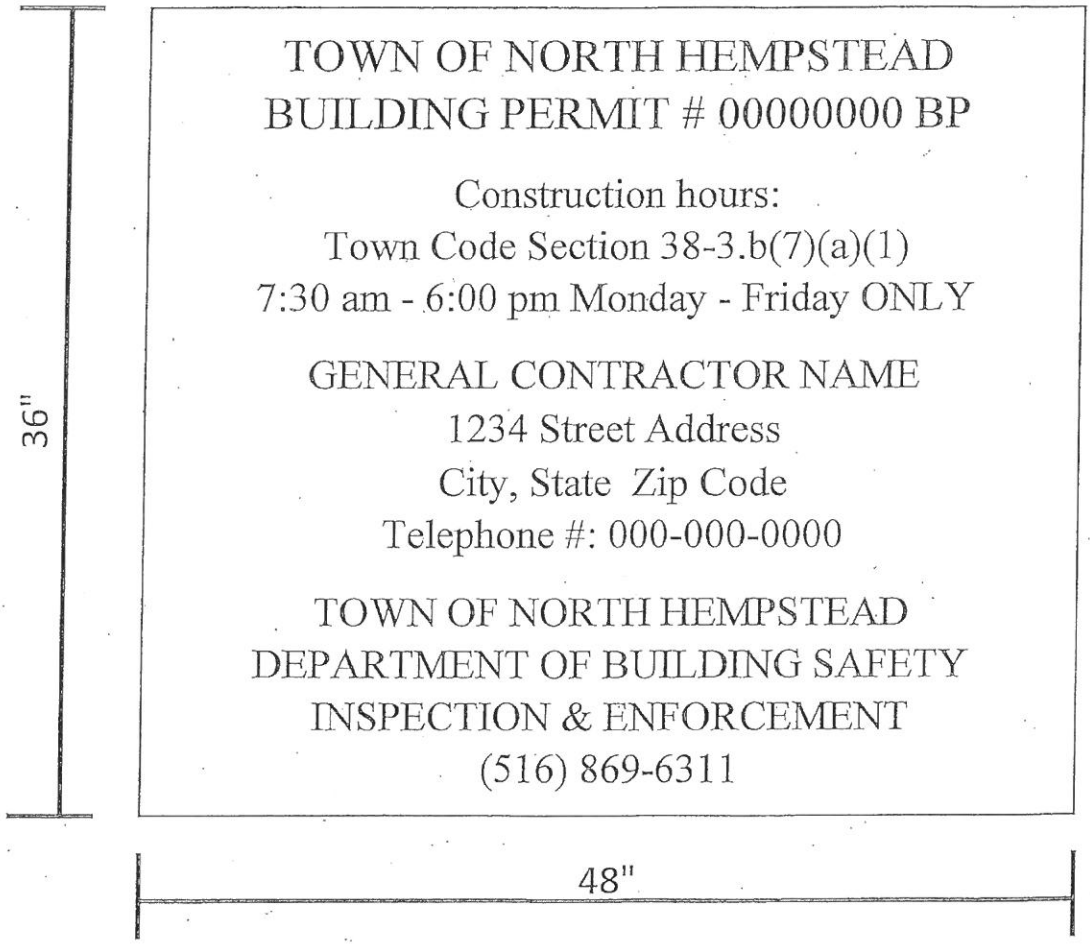

ALL LETTERING SHALL BE A MINIMUM OF 2" IN HEIGHT

Town Of North Hempstead

Department of Building Safety, Inspection and Enforcement

RECEIPT FOR PAYMENT OF FEES

Receipt: 287215 **Payment Date:** 03/11/2021

Location: 1111 MARCUS AVE, NEW HYDE PARK **SBL:** 8-B18-0300L

Owner: KEYPOINT PARTNERS (PETER MCLEAN)

Applicant: AMEC E&E P.C. (STUART PEARSON)

Paid By: ROBERT P MCCARTHY

Check #: 5893 **Clerk:** MICHAEL CONZA

Application #	Job / Fee Description	Fee Amount
2020 100729 MECH	INSTALLATION OF HARMONIC FILTER	
	Re-activation Fee	50.00
	Application Fee MECH	50.00
	Total Amount =	100.00

Electrical Inspectors, Inc.

NYBFU

New York Board of Fire Underwriters
300 East Meadow Avenue
East Meadow, NY 11554
Office: (516) 794-0400 (631) 650-0200
Website: www.eiiny.com

2021-1102153

Lake Success, Village of

Inspector: 126

Issue Date: 7/14/2021

Mail To:

Hinck Electric
Fred Finley
75 Orville Drive
Bohemia NY 11716
License # ME09-001412

Property Address:

Lockheed Martin
1111 Marcus Avenue
Lake Success NY 11020

ELECTRICAL APPROVAL CERTIFICATE

Section: Block: Lot: Permit:

AREAS LISTED BELOW ARE APPROVED BY Inspection
AND FOUND TO BE IN COMPLIANCE WITH THE BUILDING CODE OF NYS
AND CURRENT PROMULGATED NEC

No visual defects were found for the electrical inspection provided. No obvious unsatisfactory conditions were found in the areas herein below only.

Commercial Inspection Final Approved 5/25/2021

Operable Unit #1
Well RW-1RD (1111 Marcus Ave, Lake Success)
2- gfi receptacles
1- pump receptacle
1- single pole pump switch
1- single pole light switch
1- led strip light

Well RW-1RS (1111 Marcus Ave, Lake Success)
2- gfi receptacles
1- pump receptacle
1- single pole pump switch
1- single pole light switch
1- led strip light

Well EW-1R (111 Marcus Ave, Lake Success)
2- gfi receptacles
1- pump receptacle
1- single pole pump switch
1- single pole light switch
1- led strip light

This electrical inspection and certificate does not take into account any FEMA, NYS and local flood elevation requirements. It is the responsibility of the property owner to determine if flood elevation requirements apply. NYBFU and EII are not responsible for any Flood Elevation requirements. Therefore this electrical certificate is only for compliance of NYS Electrical and NEC Codes.

Richard M. Bivone
President

Philip F. Goehring, Jr.
Chief Electrical Inspector

This document features a tamper proof Quick Response code which contains the encrypted original data submitted when certificate was issued.

Electrical Inspectors, Inc.

NYBFU

New York Board of Fire Underwriters
300 East Meadow Avenue
East Meadow, NY 11554
Office: (516) 794-0400 (631) 650-0200
Website: www.eiiny.com

2021-1102158

Great Neck, Village of

Inspector: 126

Issue Date: 7/14/2021

Mail To:

Hinck Electric
Fred Finley
75 Orville Drive
Bohemia NY 11716
License # ME09-001412

Property Address:

Lockheed Martin
60 Tanners Road
Great Neck NY 11020

ELECTRICAL APPROVAL CERTIFICATE

Section: Block: Lot: Permit:

AREAS LISTED BELOW ARE APPROVED BY Inspection
AND FOUND TO BE IN COMPLIANCE WITH THE BUILDING CODE OF NYS
AND CURRENT PROMULGATED NEC

No visual defects were found for the electrical inspection provided. No obvious unsatisfactory conditions were found in the areas herein below only.

Commercial Inspection Final Approved 5/25/2021

Operable Unit 2 ,
Well RW-100 (OU2 site 60 Tanners Rd)
2- gfi receptacles
1- pump receptacle
1- single pole pump switch
1- single pole light switch
2- led strip lights.*

This electrical inspection and certificate does not take into account any FEMA, NYS and local flood elevation requirements. It is the responsibility of the property owner to determine if flood elevation requirements apply. NYBFU and EII are not responsible for any Flood Elevation requirements. Therefore this electrical certificate is only for compliance of NYS Electrical and NEC Codes.

Richard M. Bivone
President

Philip F. Goehring, Jr.
Chief Electrical Inspector

This document features a tamper proof Quick Response code which contains the encrypted original data submitted when certificate was issued.

July 28, 2021

Incorporated Village of Lake Success
318 Lakeville Road
Great Neck, NY 11020

Attn: Building/Permitting Department

Re: **Permit #20-106A**
Final Construction Affidavit and Request for Certificate of Completion
Electrical Upgrades
Former Unisys Site (Site No. 130045)
Lake Success, New York

In accordance with Permit #20-106A, for the following premises:

1111 Marcus Avenue (well vaults)
Section 8 Block B18 Lot 300H

I am a Professional Engineer, duly licensed to practice professional engineering in the State of New York and I maintain an office for the practice at AMEC E&E, PC, 209-35 Northern Blvd, Bayside, New York.

In connection with the request for a Certificate of Completion, I certify to the Building Department of the Incorporated Village of Lake Success, that the work performed on said facility was done under my general supervision and control; and that, based upon my observations, and to the best of my knowledge, electrical upgrades at the facility were implemented in substantial conformity with the approved filed plans, ordinances, rules and regulations of the Inc. Village of Lake Success and the New York State Uniform Building and Fire Prevention Code.

Based on this certification, I request that a Certificate of Completion be issued.

Please feel free to contact me at 207-828-3426 (office) or 207-776-4251 (mobile) with questions.

Sincerely,
Amec E&E, PC

Stuart Pearson, PE, Project Manager/Engineer

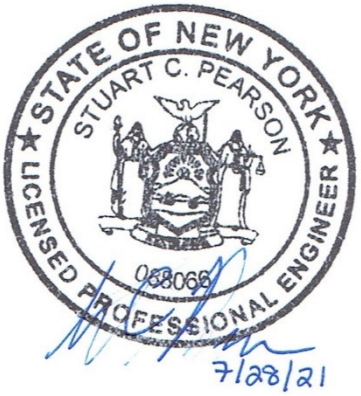

July 28, 2021

Incorporated Village of Lake Success
318 Lakeville Road
Great Neck, NY 11020

Attn: Building/Permitting Department

Re: **Permit #20-106B**
Final Construction Affidavit and Request for Certificate of Completion
Electrical Upgrades
Former Unisys Site (Site No. 130045)
Lake Success, New York

In accordance with Permit #20-106B, for the following premises:

349 Lakeville Road (well vault on school property)
Section 8 Block G Lot 105

I am a Professional Engineer, duly licensed to practice professional engineering in the State of New York and I maintain an office for the practice at AMEC E&E, PC, 209-35 Northern Blvd, Bayside, New York.

In connection with the request for a Certificate of Completion, I certify to the Building Department of the Incorporated Village of Lake Success, that the work performed on said facility was done under my general supervision and control; and that, based upon my observations, and to the best of my knowledge, electrical upgrades at the facility were implemented in substantial conformity with the approved filed plans, ordinances, rules and regulations of the Inc. Village of Lake Success and the New York State Uniform Building and Fire Prevention Code.

Based on this certification, I request that a Certificate of Completion be issued.

Please feel free to contact me at 207-828-3426 (office) or 207-776-4251 (mobile) with questions.

Sincerely,
Amec E&E, PC

Stuart Pearson, PE, Project Manager/Engineer

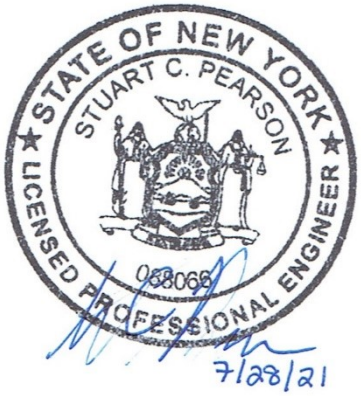

July 28, 2021

Incorporated Village of Lake Success
318 Lakeville Road
Great Neck, NY 11020

Attn: Building/Permitting Department

Re: **Permit #20-106C**
Final Construction Affidavit and Request for Certificate of Completion
Electrical Upgrades
Former Unisys Site (Site No. 130045)
Lake Success, New York

In accordance with Permit #20-106C, for the following premises:

60 Tanners Road
Section 8 Block G Lot 132

I am a Professional Engineer, duly licensed to practice professional engineering in the State of New York and I maintain an office for the practice at AMEC E&E, PC, 209-35 Northern Blvd, Bayside, New York.

In connection with the request for a Certificate of Completion, I certify to the Building Department of the Incorporated Village of Lake Success, that the work performed on said building was done under my general supervision and control; and that, based upon my observations, and to the best of my knowledge, electrical upgrades at the building were implemented in subtantial conformity with the approved filed plans, ordinances, rules and regulations of the Inc. Village of Lake Success and the New York State Uniform Building and Fire Prevention Code.

Based on this certification, I request that a Certificate of Completion be issued.

Please feel free to contact me at 207-828-3426 (office) or 207-776-4251 (mobile) with questions.

Sincerely,
Amec E&E, PC

Stuart Pearson, PE, Project Manager/Engineer

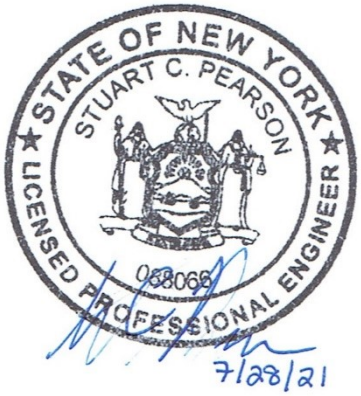

Certificate of Completion

VILLAGE OF LAKE SUCCESS

318 Lakeville Road Great Neck, N.Y. 11020

Certificate Number **21-42** *CO Date:* **July 28, 2021**

Location: **1111 MARCUS AVE** *Permit Number:* **20-106A**

Tax Parcel ID: **008-B18.0000-300-00H** *Permit Date:* **8/5/2020**

THIS CERTIFIES that the work described herein, has been completed

Type Of Permit: **Commercial Utility**

Electrical Certification: **2021-1102153/1102158**

Final Survey:

Description of Work:

ELECTRICAL UPGRADE TO RECOVERY WELL AT THE LOCKHEED SITE; JOB CODE: 3617197453.05.5A **WORK INVOLVE THE RELOCATION OF ELECTRICAL COMPONENTS IN EXTRACTION WELL VAULTS TO ABOVE-GRADE, ADDITION OF VARIABLE FREQUENCY DRIVES, AND REPLACEMENT OF CORRODED ELECTRICAL COMPONENTS. ACTIVE FILTERS TO REDUCE HARMONICS WILL BE ADDED.

Property Owner: **I.PARK, LAKE SUCCESS**

1111 Marcus Avenue

Lake Success, NY

for the aforesaid structure.

Comments: **SELF-CERTIFIED BY ENGINEER:**
Stuart Pearson, PE
Project Manager/Engineer
Amec E & E (207) 828-3426

Robert S. Bonnie, Supt. Building Dept.

The person to whom this Certificate is issued is required to deliver same to the owner.

Certificate of Completion

VILLAGE OF LAKE SUCCESS

318 Lakeville Road Great Neck, N.Y. 11020

Certificate Number **21-43** *CO Date:* **July 28, 2021**

Location: **345 LAKEVILLE RD** *Permit Number:* **20-106B**

Tax Parcel ID: **008-00G.0000-105-000** *Permit Date:* **8/5/2020**

THIS CERTIFIES that the work described herein, has been completed

Type Of Permit: **School Utility**

Electrical Certification: **2021-1102153/1102158**

Final Survey:

Description of Work:

ELECTRICAL UPGRADE TO RECOVERY WELL AT THE LOCKHEED SITE; JOB CODE: 3617197453.05.5A **WORK INVOLVE THE RELOCATION OF ELECTRICAL COMPONENTS IN EXTRACTION WELL VAULTS TO ABOVE-GRADE, ADDITION OF VARIABLE FREQUENCY DRIVES, AND REPLACEMENT OF CORRODED ELECTRICAL COMPONENTS. ACTIVE FILTERS TO REDUCE HARMONICS WILL BE ADDED.

Property Owner: **TOWN OF NORTH, HEMPSTEAD**
GREAT NECK SCHOOL DISTRICT
345 LAKEVILLE RD
GREAT NECK, NY

for the aforesaid structure.

Comments: **SELF-CERTIFIED BY ENGINEER:**
Stuart Pearson, PE
Project Manager/Engineer
Amec E & E (207) 828-3426

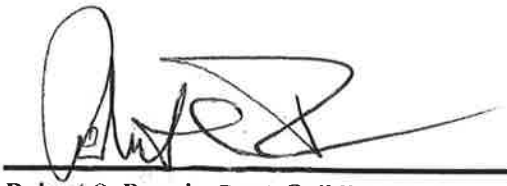

Robert S. Bonnie, Supt. Building Dept.

The person to whom this Certificate is issued is required to deliver same to the owner.

Certificate of Completion

VILLAGE OF LAKE SUCCESS

318 Lakeville Road Great Neck, N.Y. 11020

Certificate Number **21-44** *CO Date:* **July 28, 2021**

Location: **NSP/60 Tanners Road** *Permit Number:* **20-106C**

Tax Parcel ID: **008-00G.0000-132-000** *Permit Date:* **8/5/2020**

THIS CERTIFIES that the work described herein, has been completed

Type Of Permit: **utility water**

Electrical Certification: **2021-1102153/1102158**

Final Survey:

Description of Work:

ELECTRICAL UPGRADE TO RECOVERY WELL AT THE LOCKHEED SITE; JOB CODE: 3617197453.05.5A **WORK INVOLVE THE RELOCATION OF ELECTRICAL COMPONENTS IN EXTRACTION WELL VAULTS TO ABOVE-GRADE, ADDITION OF VARIABLE FREQUENCY DRIVES, AND REPLACEMENT OF CORRODED ELECTRICAL COMPONENTS. ACTIVE FILTERS TO REDUCE HARMONICS WILL BE ADDED.

Property Owner: **Manhasset Lakeville Water District**

170 East Shore Road

Great Neck, NY

for the aforesaid structure.

Comments: **SELF-CERTIFIED BY ENGINEER:**
Stuart Pearson, PE
Project Manager/Engineer
Amec E & E (207) 828-3426

Robert S. Bonnie, Supt. Building Dept.

The person to whom this Certificate is issued is required to deliver same to the owner.

APPENDIX C

CORRESPONDENCE WITH REGULATORS

From: Desai, Girish V (DEC) <girish.desai@dec.ny.gov>
Sent: Wednesday, March 10, 2021 10:57 AM
To: Rob McCarthy <rmccarthy@Ensafe.com>
Cc: Clark, Glenda B (US) <glenda.b.clark@lmco.com>; Glynn, William <GlynnWK@cdmsmith.com>; Parsons, Erika <ParsonsEL@cdmsmith.com>; Maskaly, Jason E. <maskalyje@cdmsmith.com>; Jones, Nathan E. <JonesNE@cdmsmith.com>; Alexandra Stark <astark@ensafe.com>; Pearson, Stuart C. <stuart.pearson@woodplc.com>
Subject: Unisys Site No. 130045-Revised March 2021 OU1 and OU2 Groundwater Treatment System Electrical Upgrade Work Plan

Rob,
The New York State Departments of Environmental Conservation (Department) and Health (NYSDOH) have reviewed March 2021 revised Work Plan for the OU1 and OU2 Groundwater Treatment System Electrical Upgrade for the above referenced Unisys Site and find it acceptable. The Health and safety Plan (HASP) contained in above referenced Work Plan is a requirement of the federal Occupational Safety and Health Administration (OSHA) and is not subject to the approval of Department.

Girish Desai, P.E.
Project Manager
Division of Environmental Remediation
New York State Department of Environmental Conservation
50 Circle Road, SUNY@ Stony Brook
Stony Brook, NY 11790-3409
P: (631) 444-0243 | F: (631) 444-0248
www.dec.ny.gov | |

APPENDIX D

DAILY REPORTS

CONTRACTOR PRODUCTION REPORT

LOCKHEED MARTIN – GREAT NECK, NEW YORK SITE

LM Great Neck VFD - 03/15/2021

PROJECT			
Project Name	LM Great Neck VFD	**Date**	03/15/2021
Number	0888827878	**AM Weather**	Sunny
Superintendent	Nicholas McCarthy	**PM Weather**	Sunny
Onsite Time	07:00	**Temperature**	max: 35°F min: 19°F

Summary of Work: Demolition started in vault RW-1RD. Fiber box mounted.

Site Visitors:
Dean Zahradka - Eagle Control

Changed Conditions/Delays/Conflicts Encountered

SAFETY	SHSO: Nicholas McCarthy
Was a Job Safety Meeting Held This Date?	Yes
Was an EnSafe SWAP Completed?	Yes
Was work performed involving Confined Space Entry, Excavations, Lock Out Tag Out, chemical exposures, or heights? (See SWAP for details)	No
Are there any lost-time accidents this date?	No

Actions & Inspection:

CONTRACTORS ONSITE

Company	Personnel	Onsite	Offsite	Duration (hrs)
Hinck	2	07:00	15:00	8
EnviroTrac	1	07:00	09:35	3

EQUIPMENT ONSITE

Equipment	Safety Check	Used Hrs	Idle Hrs	Repair Hrs
Ford E super duty box truck	Hinck	8	0	0

EQUIPMENT/MATERIALS RECEIVED

Description	Lot/ID	Received By	Quantity
Fiber box as well as control box dropped off by Dean from Eagle		Hinck	1

CONTRACTOR PRODUCTION REPORT

LOCKHEED MARTIN – GREAT NECK, NEW YORK SITE

LM Great Neck VFD - 03/15/2021

SAMPLING, TESTING & INSPECTIONS	
Description	**Company/Personnel**
NA	

WASTE ACCUMULATED, STOCKPILED AND TRANSPORTED OFFSITE
Description
Demo debris of assorted metal conduits/wire/fittings from RW-1RD; consists of conduit, boxes, box covers, wire, etc.

SUMMARY OF WORK ACTIVITIES		
Time	**Title**	**Notes**
07:00	On site	EnSafe (MBG/NM) Hinck (BH/GC), and EnviroTrac (JW) on site.
07:06	Air Monitoring	4 gas meter/ PID calibrated.
08:00	Mobilization	EnSafe (RM) on site. all parties speak about heading over for a mobilization meeting is the SSDS building
08:10	Meeting	Every party mobilizes to the SSDS building for the pre work meeting. The work plan was discussed as well as completed the radiation training. Lockout tag out between Hinck and PES was reviewed. EnSafe conducted the health and safety meeting as well as went over specifics in the work plan.
09:30	Meeting complete	All parties head back to OU1 to convoy to RW-1RD
09:35	EnviroTrac offsite	
09:57	RW-1RD	EnSafe and Hinck are on site at RW-1RD. RM and Hinck head down into vault to check out the work area before work is started. Hinck pulls their material truck up onto the lawn and parks near the vault p. 4 gas meter deployed and has no response to vaults air conditions. See “confined space alternate procedures permit and certification” form.
10:50	Delivery	Dean from Eagle here to drop of fiber box and control panel box.
11:00	RW-1RS	EnSafe (RM) wants to go into vault RW-1RS. EnSafe opens vault and deploys 4 gas meter and it doesn’t alarm. Pictures we’re taken and RM exits vault.
11:28	Start up	Hinck is starting to unload tools and some conduit from their box truck.

11:45	Demo starts	Hinck begins removing the existing corroded conduit from RW-1RD. After speaking with the foreman, Hinck plans to continue demolition for the reminder of the day.
13:35	Air Monitoring	4-gas/PID values remain the same. They haven't fluctuated yet.
14:03	Fiber box	Hinck is lowering the fiber box for fiber optic into the vault for it to be mounted.
14:41	Fiber box	Fiber box is mounted. Work will continue tomorrow.
15:00	Demobilization	Hinck loads all demoed waste into truck and brings to OU1 treatment plant drum storage area. All demo waste placed inside fenced area - PES approved this location. Temporary storage until proper disposal coordinated. All vaults closed and secured.
15:15	Demobilization	Hinck offsite MBG/NM review day's work
15:48	Offsite	EnSafe (MBG and NPM) offsite.

CONTRACTOR PRODUCTION REPORT

LOCKHEED MARTIN – GREAT NECK, NEW YORK SITE

LM Great Neck VFD - 03/15/2021

PHOTO - Fiber Box	PHOTO - Back Box
	
Fiber box received on its by Eagle	Back box received on site by Eagle

PHOTO - LED Light to be installed



CONTRACTOR PRODUCTION REPORT

LOCKHEED MARTIN – GREAT NECK, NEW YORK SITE

LM Great Neck VFD - 03/15/2021

PHOTO - Waste



Waste that was generated today.

END REPORT

LM Great Neck VFD - 03/15/2021

CONTRACTOR PRODUCTION REPORT

LOCKHEED MARTIN – GREAT NECK, NEW YORK SITE

LM Great Neck VFD - 03/16/2021

PROJECT			
Project Name	LM Great Neck VFD	**Date**	03/16/2021
Number	0888827878	**AM Weather**	Sunny
Superintendent	Nicholas McCarthy	**PM Weather**	Sunny
Onsite Time	07:00	**Temperature**	max: 30°F min: 15°F

Summary of Work: Demo continued on RW-1RD. System shutdown. Fiber optics spliced over in new box. Temp power feeding RW-1RD from RW-1RS. some new PVC conduit installed.

Site Visitors:
Paul Lanzillotta - Eagle Control

Changed Conditions/Delays/Conflicts Encountered

SAFETY	SHSO: Nicholas McCarthy
Was a Job Safety Meeting Held This Date?	Yes
Was an EnSafe SWAP Completed?	Yes
Was work performed involving Confined Space Entry, Excavations, Lock Out Tag Out, chemical exposures, or heights? (See SWAP for details)	No
Are there any lost-time accidents this date?	No

Actions & Inspection:

CONTRACTORS ONSITE

Company	Personnel	Onsite	Offsite	Duration (hrs)
Hinck	2	07:00	15:00	8

EQUIPMENT ONSITE

Equipment	Safety Check	Used Hrs	Idle Hrs	Repair Hrs
Ford Super Duty box truck	Hinck	0	0	0

EQUIPMENT/MATERIALS RECEIVED

Description	Lot/ID	Received By	Quantity
Material dropped off by Hinck pickup truck, a few boxes of miscellaneous material.		Hinck	1

CONTRACTOR PRODUCTION REPORT

LOCKHEED MARTIN – GREAT NECK, NEW YORK SITE

LM Great Neck VFD - 03/16/2021

SAMPLING, TESTING & INSPECTIONS	
Description	**Company/Personnel**
NA	

WASTE ACCUMULATED, STOCKPILED AND TRANSPORTED OFFSITE
Description
Conduit, PVC pipe, unistrut, junction boxes and the control panel (see photo)

SUMMARY OF WORK ACTIVITIES		
Time	**Title**	**Notes**
07:00	Mobilization	EnSafe (MBG and NPM) as well as Hinck Electric (BH and GC) rally at meeting point OU1. NPM Performs safety meeting.
07:28	RW-1RD	NPM on site at RW-1RD with Hinck. Vault opened to provide passive ventilation. 5 minutes elapse. 4 gas meter is bump tested and placed at the opening of the vault. The readings clear. O2: 20.9% CO: 0 ppm H2S: 0 ppm LEL: 0% VOC: 0ppm. Hinck begins to unload tooling from their box truck which was kept at OU1 overnight. Based on 4-gas readings, Hinck given clearance to enter vault.
09:45	RW-1RD	Paul Lanzillotta from Eagle came over to talk with Hinck about shut down of well. MBG is notifying PES that the shutdown will happening at approximately 11:00am. Observe readings on 4 gas meter and note 3 0ppm of VOCs (all others OK). Notify Hinck and conclude that it is the PVC glue being used by Hinck in vault setting is causing the elevated VOC reading. With glue capped, VOC reading drop back to normal level. Will continue to monitor VOC levels.
10:05	RW-1RS	Hinck needs to get into vault RW-1RS to plug in an extension cord that they are using for temporary power. EnSafe (NPM) unlocks vaults to ventilate. He waits about 5 minutes then puts 4 gas meter in. Readings are all normal. Hinck enters vault to do work.

10:10	Call to Dave (Plant supervisor)	Hinck calls Dave (PES) to discuss the plan for the system shutdown. Dave gives the okay and indicates PES is currently doing sampling so will need approx. 1 hr before conducting shutdown. Hinck OK with timeline, have other tasks to complete. Wayne (PES) to call when ready to execute shutdown. Paul with Eagle offsite. EnSafe asks Hinck if they are alright working in vault environments with the PVC glue. Hinck confirms they are alright with working in the vault. 4 gas meter monitoring/ documenting will take place more thoroughly.
11:06	Delivery	Hinck pickup truck is on site dropping off some material for the job.
11:33	4 gas meter check	All readings within background except VOCs are at 8 ppm.
11:34	Shutdown	Hinck coordinated with PES. Shutdown process is starting now.
11:43	Shutdown	PES informs Hinck of system shutdown. PES confirms power is shutdown at vault. The power to the well pump and power going to vault RW-1RD are locked out and tagged. Hinck checks power on the vaults end and is ready to start work. Hinck proceeds with switching connections.
12:13	Start up	Hinck got their wires transferred over and spliced through in new junction box. Hinck then calls Dave and there finds out there are alarms in the system where there shouldn't be. Hinck is going to call Eagle to get them back to vault RW-1RD to look at the fiber connections.
13:30	Eagle on site	Eagle has returned to site to check out the fiber that was hooked up by Hinck. He couldn't see any problem and is headed over to OU1 to check to see if there is a problem on that end. Paul heads to OU1
14:29	System running	Problem was solved at OU1. The system is up and running. Power is still down at RW-1RD and will remain down until work is complete.
14:30	Demobilization	Hinck is starting to pass tools up from vault to get packed up to head off site. They will need to put their lock on the lock out tag out before they leave site
14:46	Demobilization	Hinck and EnSafe drive to OU1 to unload waste and talk about how the day went. Hinck puts there locks over the PES locks that are on "RW-1RS VAULT POWER" as well as the well pump for the vault.
15:15	Demobilization	Hinck and EnSafe offsite.

CONTRACTOR PRODUCTION REPORT

LOCKHEED MARTIN – GREAT NECK, NEW YORK SITE

LM Great Neck VFD - 03/16/2021

PHOTO - Pre Work photos



Fiber box that was installed by Hinck yesterday (3/15/21).

PHOTO - Pre Work Photos

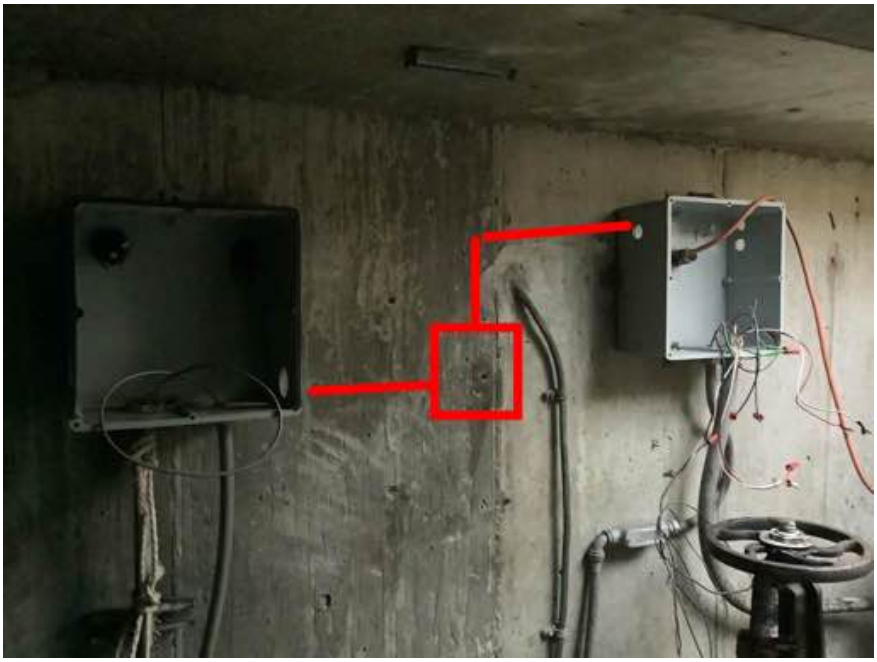

Some of the demolition that took place yesterday. It's difficult to capture pictures of the demo because of the tight space for the camera.

CONTRACTOR PRODUCTION REPORT

LOCKHEED MARTIN – GREAT NECK, NEW YORK SITE

LM Great Neck VFD - 03/16/2021

PHOTO - Waste	PHOTO - New work
	
Waste generated for the day.	New conduit ran today as well as the junction box.

PHOTO - New work



Fiber box and sub panel within RW-1RD.

END REPORT

LM Great Neck VFD - 03/16/2021

CONTRACTOR PRODUCTION REPORT

LOCKHEED MARTIN – GREAT NECK, NEW YORK SITE

LM Great Neck VFD - 03/17/2021

PROJECT			
Project Name	LM Great Neck VFD	**Date**	03/17/2021
Number	0888827878	**AM Weather**	Cloudy
Superintendent	Nicholas McCarthy	**PM Weather**	Cloudy
Onsite Time	07:00	**Temperature**	max: 60°F min: 45°F

Summary of Work: Control panel shell mounted. Internals hooked up inside. Lighting circuit ran as well as fixture mounted. New conduit ran for well pump switch and GFCI.

Site Visitors:
Ted Masters – EnviroTrac
Craig Moore – CDM Smith
Hinck employee – material delivery
Eagle Control – dropped off control panels

Changed Conditions/Delays/Conflicts Encountered

SAFETY	SHSO: Nicholas McCarthy
Was a Job Safety Meeting Held This Date?	Yes
Was an EnSafe SWAP Completed?	Yes
Was work performed involving Confined Space Entry, Excavations, Lock Out Tag Out, chemical exposures, or heights? (See SWAP for details)	Yes
Are there any lost-time accidents this date?	No

Actions & Inspection:

CONTRACTORS ONSITE

Company	Personnel	Onsite	Offsite	Duration (hrs)
Hinck	2	07:00	15:00	8

EQUIPMENT ONSITE

Equipment	Safety Check	Used Hrs	Idle Hrs	Repair Hrs
Ford E super duty box truck	Hinck	8	0	0

CONTRACTOR PRODUCTION REPORT

LOCKHEED MARTIN – GREAT NECK, NEW YORK SITE

LM Great Neck VFD - 03/17/2021

EQUIPMENT/MATERIALS RECEIVED			
Description	**Lot/ID**	**Received By**	**Quantity**
Delivery truck for Hinck with a few small boxes of miscellaneous materials.		Hinck	1

SAMPLING, TESTING & INSPECTIONS	
Description	**Company/Personnel**
NA	

WASTE ACCUMULATED, STOCKPILED AND TRANSPORTED OFFSITE
Description
NA

SUMMARY OF WORK ACTIVITIES		
Time	**Title**	**Notes**
07:00	OU1	Hinck (GC and BH) and EnSafe(NPM and MBG) meet at OU1 rally point. NPM conducts safety meeting.
07:26	RW-1RD	Hinck and NPM convoy to RW-1RD. NPM opens the vault to naturally ventilate for 5 mins. The 4 gas meter is then bump checked. All readings come back normal: 02: 20.9% CO: 0ppm H2S: 0 ppm LEL: 0% VOC: 0ppm The monitor's tubing is lowered into the vault. The monitor still reads fine after a few minutes, EnSafe gives Hinck clearance to enter the vault and begin work.
07:36	Mobilization	Hinck starts the day by unloading tools off box truck and lowering them down into the vault. They get a drop light set up down in the vault for sufficient light to work. Hinck shuts down main breaker to the sub panel killing power in the vault. BH locks it out with single breaker lockout device to ensure it won't get accidentally flipped on.

08:12	Delivery	Hinck gets a delivery from one of their guys in a pickup truck. It consisted of a few small boxes. He is on site for about 10 minutes then heads off site.
08:26	Gas monitor reading	NPM checks gas monitor and all readings are normal besides VOCs which is reading 6 ppm. Hinck is using PVC glue in the vault so we expect to see VOCs above background multiple times today. NPM informs Hinck of the elevated reading, both parties agree its related to PVC glue and will monitor with Hinck if they would like additional ventilation.
09:59	Gas monitor reading	NPM checks gas monitor and everything is still reading normal besides VOC. VOC spiked to 50 ppm but dropped down after a few seconds and is now ranging from 6-10 ppm. Hinck indicates that they don't have any physical effects and want to continue work with one vault hatch open.
10:47	RW-1RD	Hinck has new power panel mounted to wall. They are continuing to add new PVC conduit circuits. BH thinks they will get to the knife switch on the back half of the vault today so they are beginning to organize their material/tools to do so.
10:53	Gas monitor reading	All readings came back normal. VOCs went down and are hovering between 0.6-1.0 ppm
11:57	CDM and EnviroTrac on site	Craig Moore (CDM) as well as Theodore Masters (EnviroTrac) on site at RW-1RD. I conduct a safety meeting for both parties and let them on site. Craig is taking notes. Theodore heads down into vault and takes pictures for upcoming work.
12:06	CDM and EnviroTrac offsite	
13:20	Delivery	Hinck gets another delivery from their pickup truck. This order consisted of some unistrut and two boxes of miscellaneous material
13:33	Eagle on site	Eagle is on site to drop off two new control panels. Hinck and Eagle unload them off Eagle's pickup and load them into Hinck's box truck. The drop off included the internals to the back box in RW-1RD, the back box and internals for RW-1RS, as well as the back box the vault after that.
14:08	Control Panel	Hinck lowers Eagle control panel in vault RW-1RD. It took Hinck and NPM to lower the control panel into the vault. Now they are pulling tools out of the vault and packing up the box truck.
15:00	Off site	Hinck is offsite. No waste was generated today so there was no demobilization at OU1. Hinck left the site from RW-1RD.

PHOTO - Control board



New control box mounted

PHOTO - Conduit with boxes



Conduit ran for switches and GFCI

PHOTO - Lighting circuit plus lighting fixture



New conduit, junction box for the lights, and new light

PHOTO - Temp Fiber box with intervals



Fiber box mounted with the internals

PHOTO - Panel and control board

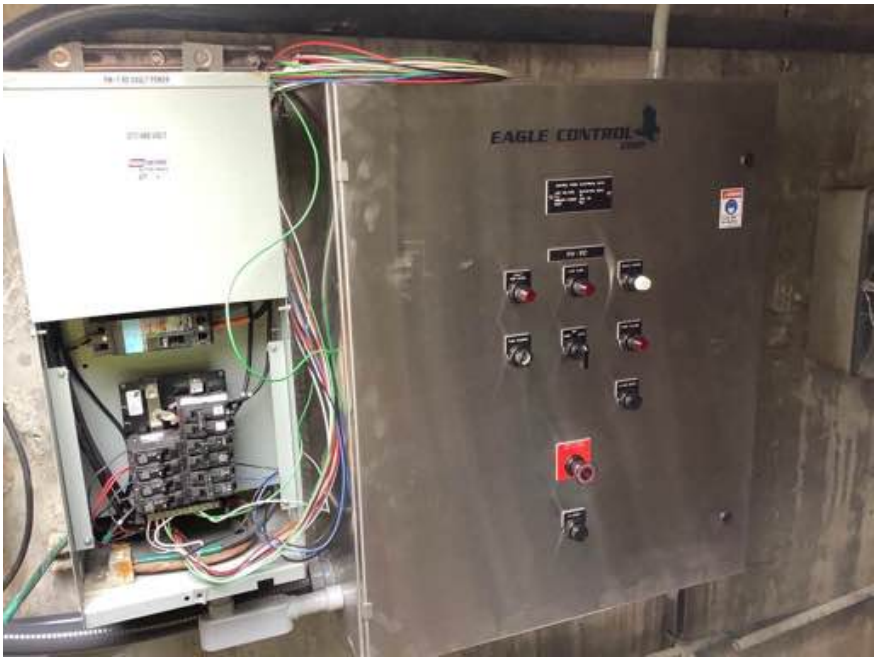

New control panel as well as preexisting sub panel which will stay

CONTRACTOR PRODUCTION REPORT

LOCKHEED MARTIN – GREAT NECK, NEW YORK SITE

LM Great Neck VFD - 03/17/2021

PHOTO - End of day



Site secure as all parties head out.

END REPORT

LM Great Neck VFD - 03/17/2021

CONTRACTOR PRODUCTION REPORT

LOCKHEED MARTIN – GREAT NECK, NEW YORK SITE

LM Great Neck VFD - 03/18/2021

PROJECT			
Project Name	LM Great Neck VFD	**Date**	03/18/2021
Number	0888827878	**AM Weather**	Cloudy
Superintendent	Nicholas McCarthy	**PM Weather**	Rain
Onsite Time	07:00	**Temperature**	max: 40°F min: 20°F

Summary of Work: Feeding everything that is coming off the sub panel. Running more PVC conduit for remaining circuit.

Site Visitors:
Kevin Loyst - FPM (Village of Lake Success Environmental Consultant)
Tom Whitaker - AMEC

Changed Conditions/Delays/Conflicts Encountered

SAFETY	SHSO: Nicholas McCarthy
Was a Job Safety Meeting Held This Date?	Yes
Was an EnSafe SWAP Completed?	Yes
Was work performed involving Confined Space Entry, Excavations, Lock Out Tag Out, chemical exposures, or heights? (See SWAP for details)	Yes
Are there any lost-time accidents this date?	No

Actions & Inspection:

CONTRACTORS ONSITE

Company	Personnel	Onsite	Offsite	Duration (hrs)
Hinck	2	07:00	15:00	8

EQUIPMENT ONSITE

Equipment	Safety Check	Used Hrs	Idle Hrs	Repair Hrs
Ford E super duty box truck	Hinck	8	0	0

EQUIPMENT/MATERIALS RECEIVED

Description	Lot/ID	Received By	Quantity
Two box of miscellaneous material		Hinck	1

CONTRACTOR PRODUCTION REPORT

LOCKHEED MARTIN – GREAT NECK, NEW YORK SITE

LM Great Neck VFD - 03/18/2021

SAMPLING, TESTING & INSPECTIONS	
Description	**Company/Personnel**
NA	

WASTE ACCUMULATED, STOCKPILED AND TRANSPORTED OFFSITE
Description
NA

SUMMARY OF WORK ACTIVITIES		
Time	**Title**	**Notes**
07:00	OU1	Hinck (Gabe Costa and Bob Herrmann) and EnSafe (NPM and MBG) meet at OU1 rally point. NPM conducts safety meeting.
07:37	Mobilization	Hinck and NPM convoy to RW-1RD. NPM opens the vault to naturally ventilate for 5 mins. The 4 gas meter is then bump checked. All readings come back normal: 02: 20.9% CO: 0ppm H2S: 0 ppm LEL: 0% VOC: 2 ppm The monitors tubing is lowered into the vault. The monitor still reads fine after a few minutes, EnSafe gives Hinck clearance to enter the vault and begin work.
07:38	Mobilization	Hinck starts the day by unloading tools off box truck and lowering them down into the vault. They get a drop light set up down in the vault for sufficient light to work. Hinck shuts down main breaker to the sub panel killing power in the vault. BH locks it out with single breaker lockout device to ensure it won't get accidentally flipped on.
08:28	RW-1RD	NPM hears 4 gas go into alarm. He rushes over to check it out. VOCs have spiked to 350 ppm. Hinck is ordered to get out of the vault. NPM opens second vault hatch to allow more air flow. After a few minutes the gas meter is reading normal once again. The problem was once again correlated to the PVC glue being used.
08:40	Checking out vaults EW-1R and RW-3	NPM and BH head over to vaults EW-1R and RW-3 to check out the specs on distance between the two. Hinck needed to know if

		there was conduit running between the two. There were two conduits in fact running between the two vaults.
09:44	Visitors	Tom Whitaker from AMEC comes by the site to see the progress made on RW-1RD. He and BH speak about the progress. I conduct a safety meeting with Tom to explain the hazards. Tom and BH go down into the vault to look at the progress.
10:13	Visitors	Tom (AMEC) is back on site to oversee some of the electrical work. Kevin Loyst with FPM is on site. He is just looking for general progress of the project to report it back to the town of Lake Success. He is on site for about 5 mins then leaves.
10:13	Gas monitoring	4 gas meter is still picking up above average VOCs. Whenever PVC glue is in use it will range from 20-100 ppm. A large spike has not occurred since the second vault hatch was opened. Hinck is running conduit for various outlets and switches.
10:59	RW-1RD	Hinck is starting to pull wire through the new conduits they ran to feed to circuits.
11:17	Gas monitoring	Hasn't been a spike in VOCs for about an hour. NPM checks monitor and everything is reading normal. VOC's are hovering around 6 ppm.
12:00	DW-1RD	Hinck continues to run wire to circuits in need of power. GFCI complete as well the receptacles being jumped out to each other.
12:29	Gas monitoring	NPM checks gas meter and every measurement is normal. There's hasn't been a VOC spike in two hours. Directly correlated to PVC glue use.
13:31	AMEC is offsite	Tom (AMEC) is offsite. Hinck continues work.
14:23	PVC coated galvanized lipe	After Tom (AMEC) electrical inspection from early today, Hinck brought up the fact that there is preexisting piping that is in good condition to stay. It is PVC coated galvanized pipe. Tom discussed this with AMEC Engineer of Record. According to Tom, AMEC Engineer of Record approved that the PVC coated galvanized can stay, so it will not be replaced.
14:42	Site secured	The work site in secured. Hinck is off site.
14:55	Site secured	Grabbed secured site photo. NPM is offsite.

PHOTO - Post work



Black pipe now secured on unistrut. Was hanging originally, more secure

PHOTO - Post work



More unistrut on both black pipe and PVC pipe.

CONTRACTOR PRODUCTION REPORT

LOCKHEED MARTIN – GREAT NECK, NEW YORK SITE

LM Great Neck VFD - 03/18/2021

PHOTO - Post work	PHOTO - Post work
	
Box covers as well as GFCI.	More unistrut mounted to secure PVC piping.

CONTRACTOR PRODUCTION REPORT

LOCKHEED MARTIN – GREAT NECK, NEW YORK SITE

LM Great Neck VFD - 03/18/2021

PHOTO - Post work



Site secured.

END REPORT

LM Great Neck VFD - 03/18/2021

CONTRACTOR PRODUCTION REPORT

LOCKHEED MARTIN – GREAT NECK, NEW YORK SITE

LM Great Neck VFD - 03/19/2021

PROJECT			
Project Name	LM Great Neck VFD	**Date**	03/19/2021
Number	0888827878	**AM Weather**	Clear, sunny
Superintendent	Nicholas McCarthy	**PM Weather**	Sunny
Onsite Time	07:00	**Temperature**	max: 30°F min: 15°F

Summary of Work: All splices made up in junction boxes. Most circuits tied into sub panel. Demo started in RW-1RS.

Site Visitors:
Craig Moore - CDM Smith
Wayne - PES
Dave - PES

Changed Conditions/Delays/Conflicts Encountered

SAFETY	SHSO: Nicholas McCarthy
Was a Job Safety Meeting Held This Date?	Yes
Was an EnSafe SWAP Completed?	Yes
Was work performed involving Confined Space Entry, Excavations, Lock Out Tag Out, chemical exposures, or heights? (See SWAP for details)	Yes
Are there any lost-time accidents this date?	No

Actions & Inspection:

CONTRACTORS ONSITE

Company	Personnel	Onsite	Offsite	Duration (hrs)
Hinck	2	07:00	14:00	7

EQUIPMENT ONSITE

Equipment	Safety Check	Used Hrs	Idle Hrs	Repair Hrs
Ford E super duty box truck	Hinck	8	0	0

CONTRACTOR PRODUCTION REPORT

LOCKHEED MARTIN – GREAT NECK, NEW YORK SITE

LM Great Neck VFD - 03/19/2021

EQUIPMENT/MATERIALS RECEIVED			
Description	**Lot/ID**	**Received By**	**Quantity**
Hinck gets delivery from a sedan: PVC piping and unistrut.		Hinck	1

SAMPLING, TESTING & INSPECTIONS	
Description	**Company/Personnel**
NA	

WASTE ACCUMULATED, STOCKPILED AND TRANSPORTED OFFSITE
Description
Metal pipe, conduit, and wire from RW-1RS and RW-1RD.

SUMMARY OF WORK ACTIVITIES		
Time	**Title**	**Notes**
07:00	Mobilization	Hinck (Gabe Costa) and EnSafe (Nick McCarthy) meet at OU1. GC informs NPM that Hinck's, Bob Herrmann, is running late. GC and NPM decide to head to vault RW-1RD and BH will meet us there when he arrives on site. NPM conducts a safety meeting with GC.
07:15	RW-1RD	NPM and GC on site at RW-1RD. GC pulls their box truck(refer to equipment used on site page for info) up next to RW-1RD. NPM bump checks the 4 gas meter with both the 4 gas mixture and isobutylene. Both bump check's readings came back within 5% of the gas meters thresholds. NPM opens vault to let ventilate for 5 minutes. The readings on the meter are normal: 02: 20.9% CO: 0ppm H2S: 0 ppm LEL: 0% VOC: 0 ppm He places the 4 gas meter in and waits for readings. They come back normal. NPM gives GC clearance to start lowering tools down into the vault.
07:20	BH on site	BH is on site at RW-1D. NPM conducts a safety meeting with BH and informs him the vaults atmospheric conditions are fine to enter. Hincks shuts down main breaker to the sub panel killing

		power in the vault. BH locks it out with single breaker lockout device to ensure it won't get accidentally flipped on.
08:17	RW-1RD	Hinck is working on tying in a few circuits to the sub panel. Both BH and GC are working in the vault together.
09:14	Delivery	Hinck receives a delivery. It consists of PVC piping and unistrut.
10:43	RW-1RS	BH asks NPM if he could open vault RW-1RS so he could spec out what has to be done. NPM opens vault and lets ventilate for 5 minutes. NPM places 4 gas meter into vault and leaves it in for a few minutes. The readings are coming back normal. NPM gives BH the approval to go into vault.
10:43	Craig Moore onsite	Craig Moore is on site. He will be on and off site throughout the day checking on progress. He's moving between the DW-15 and VFD projects.
12:01	Craig Moore offsite	Craig Moore with CDM Smith is offsite after checking in on progress.
12:46	RW-1RS	BH is offsite, he has a work call related to the project. GC is going to transition to RW-1RS to start working on what he can for the remainder of the day. Before he starts work, NOM opens the vault, lets it ventilate for 5 minutes then places the 4 gas into the vault. NPM waits 5 minutes to see if readings on 4 gas change. The readings remain constant, NPM gives GC clearance to enter vault and start work. GC informs NPM that main breaker in sub panel is off and is locked out and tagged. GC will start demolition.
13:19	PES	Dave and Wayne with PES swing by RW-1RD/DW-1RS to take some readings.
13:22	Offsite	Hinck and PES are offsite.
13:46	Offsite	NPM is offsite after securing vaults.

PHOTO - Damage	PHOTO - RW-1RD Waste
	
Ruts from Hinck's box truck this morning. The rain from the night before mixed with the warm weather overnight left the ground very soft.	Waste generated from RW-1RD today

PHOTO - RW-1RS	PHOTO - RW-1RD
	
Waste generated from the demolition In RW-1RS.	Splices made up in a junction box.

PHOTO - RW-1RD	PHOTO - RW-1RD
	
Knife switch that was fed today.	Work area. Just some minor clean up and it's complete.

CONTRACTOR PRODUCTION REPORT

LOCKHEED MARTIN – GREAT NECK, NEW YORK SITE

LM Great Neck VFD - 03/19/2021

PHOTO - RW-1RD	PHOTO - RW-1RS
	
Site secured	Some demolition progress in the afternoon

PHOTO - RW-1RS	PHOTO - RW-1RS
	
More demolition progress.	More demolition progress

END REPORT

LM Great Neck VFD - 03/19/2021

CONTRACTOR PRODUCTION REPORT

LOCKHEED MARTIN – GREAT NECK, NEW YORK SITE

LM Great Neck VFD - 03/22/2021

PROJECT			
Project Name	LM Great Neck VFD	**Date**	03/22/2021
Number	0888827878	**AM Weather**	Clear, sunny
Superintendent	Nicholas McCarthy	**PM Weather**	Sunny
Onsite Time	07:00	**Temperature**	max: 60°F min: 35°F

Summary of Work: Finished wiring in sub panel in RW-1RD. Demolition in RW-1RS continued.

Site Visitors:
Craig Moore – CDM Smith
Wayne – PES

Changed Conditions/Delays/Conflicts Encountered

SAFETY	SHSO: Nicholas McCarthy
Was a Job Safety Meeting Held This Date?	Yes
Was an EnSafe SWAP Completed?	Yes
Was work performed involving Confined Space Entry, Excavations, Lock Out Tag Out, chemical exposures, or heights? (See SWAP for details)	Yes
Are there any lost-time accidents this date?	No

Actions & Inspection:

CONTRACTORS ONSITE

Company	Personnel	Onsite	Offsite	Duration (hrs)
Hinck	2	07:00	15:00	8
Eagle Control	2	07:30	13:30	6

EQUIPMENT ONSITE

Equipment	Safety Check	Used Hrs	Idle Hrs	Repair Hrs
Ford E super duty box truck	Hinck	8	0	0

EQUIPMENT/MATERIALS RECEIVED

Description	Lot/ID	Received By	Quantity
NA			

CONTRACTOR PRODUCTION REPORT

LOCKHEED MARTIN – GREAT NECK, NEW YORK SITE

LM Great Neck VFD - 03/22/2021

SAMPLING, TESTING & INSPECTIONS	
Description	**Company/Personnel**
RW-1RD Startup and Testing	Project Team

WASTE ACCUMULATED, STOCKPILED AND TRANSPORTED OFFSITE
Description
NA

SUMMARY OF WORK ACTIVITIES		
Time	**Title**	**Notes**
07:00	Mobilization	Hinck's Bob Herrmann (BH) and Gabe Costa (GC) are on site as well as Ensafe's (NPM). NPM starts day by calibrating 4 gas meter. The multi gas span passes, all thresholds are within 2% of the limits they should hit from the calibration gas. VOC calibration passes. NPM then conducts a safety meeting with BH and GC. Craig Moore with CDM Smith is on site and will be on site periodically throughout the day to observe the power up of vault RW-1RD.
07:20	RW-1RD	Hinck and NPM are on site at RW-1RD. NPM opens both RW-1RD and RW-1RS and lets them ventilate for 5 minutes. The 4 gas meter goes into RW-1RD. The readings come back normal: O2: 20.9% CO: 0 ppm H2S: 0 ppm LEL: 0% VOCs: 0 ppm NPM gives Hinck clearance to enter RW-1RD.
07:28	Mobilization	Hinck begins to unload tools off box truck and lower them into vault. They will start the day by wiring in the rest of the sub panel in RW-1RD. Hinck informs NPM that was power is shut off to vault RW-1RD so they can begin work.
07:48	RW-1RS	GC wants to continue demo in RW-1RS. The sub panel in RW-1RD is close to complete. NPM drops 4 gas meter in RW-1RS. Readings come back normal. 02: 20.9% CO: 0ppm H2S: 0ppm LEL: 0%

		VOCs: 0 ppm GC gets clearance from NPM to go into vault. GC informs NPM the main breaker is shut off to vault RW-1RS so they can begin work.
07:52	Eagle on site	Paul L with Eagle is on site. NPM conducts safety meeting him. Paul will be periodically on and off site throughout the day.
08:17	Eagle back on site	Paul and Mike from Eagle are on site. They will be putting a configuration into the module in vault RW-1RD. The configuration is for the fiber communication between wells. NPM conducts a safety meeting with Mike. Paul informs NPM that the power up can happen within the hour.
08:25	RW-1RD	Splices made up in sub panel so they are ready to power up sub panel, which will power up Eagle's panel. Hinck has removed their lock and tag at OU1. PES will have to remove their lock to flip power on. Once power is on the the fibers in temp box will be moved over to Eagle panel. Two hard wired circuits will be tied in, the float switch and the e stop. Eagle and Hinck will check to see if float switch and emergency stop are working correctly.
08:52	System shut down	BH calls Wayne (PES) to ask for system shutdown to power up RW-1RD. Wayne will remove his lock on the breaker powering RW-1RD. The shutdown will be happening in 15 minutes.
09:07	System is shutdown	Wayne calls BH to inform him that the system is shutdown. Sub panel has power at RW-1RD. Well pump also has power but the disconnect will remain in the off position.
09:27	Fiber transfer	Hinck is transferring fibers from temp fiber box to Eagle control panel. Temp fiber box is removed from wall and taken out of the vault. Eagle connecting fiber to module. Emergency stop and float switch are landed.
10:18	Testing	Paul with Eagle Informs that there is communication through fiber from RW-1RD. Everything is working as it should. The float switch is working fine, as well as the emergency stop. Every test done at RW-1RD is seen at OU1 as it should. Next step, is start up.
10:44	RW-1RS	GC continues demo in RW-1RS.
10:53	Wayne on site	Wayne is on site. He did some tests while Hinck took amperage readings. everything checked out fine. Wayne is offsite. He will head back to OU1 to do some calculations then he will be back.
11:22	RW-1RS	Hinck is going to to temp feed the circuits that can't go offline at RW-1RS with power from the live receptacle circuit from RW-1RD so they can continue demolition.

12:45	Wayne on site	Wayne came and tested the flow rate, emergency stop, as well as the float. Each component worked the way it should. Wayne is offsite to reset the vault from OU1 to power it back up. Eagle is offsite.
12:49	RW-1RS	Hinck has been running new pvc conduit in n RW-1RS and has made some good progress.
12:57	RW-1RD	All tests have been run. It is complete aside from the supervised run time. Wayne informs NPM that they may start the wells supervised time today or they may wait until tomorrow. Thursday is the latest start up time for the well. Wayne heads off site.
14:00	RW-1RD	Vault is complete. PES has run tests and will have a supervised run tomorrow. Hinck continues demo in RW-1RS. Hinck has also started to put up some new conduit and boxes.
14:30	Hinck off site	
15:00	EnSafe off site	

PHOTO - RW-1RS

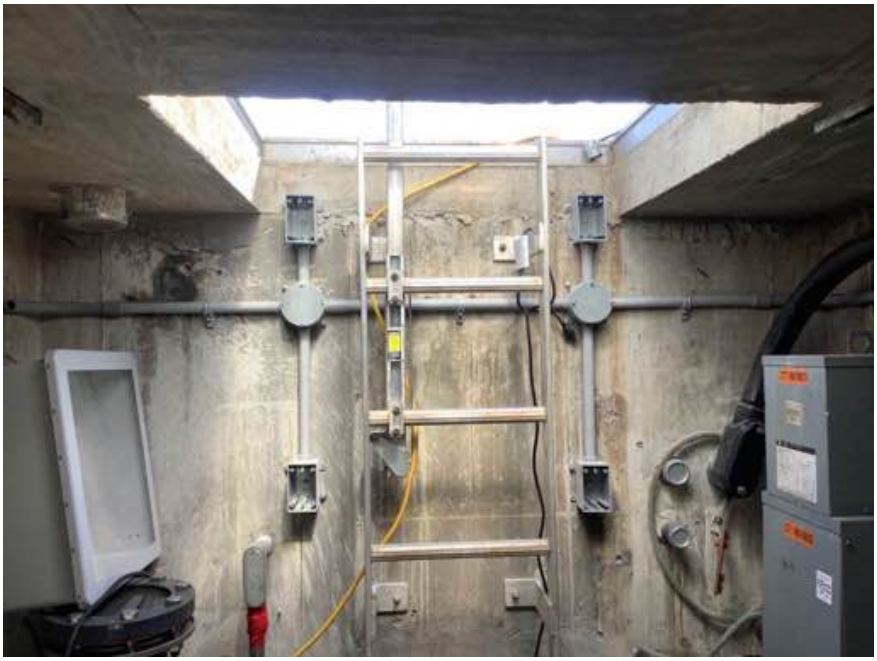

New conduit ran in RW-1RS

PHOTO - RW-1RS



New conduit ran as well as junction box.

PHOTO - New junction boxes and receptacle boxes.

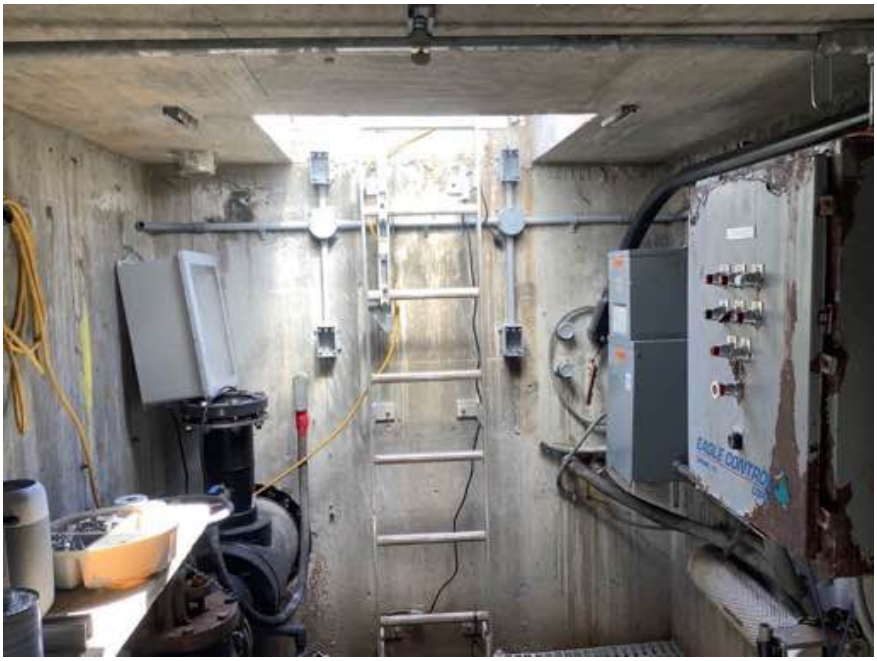

PHOTO - Back wall of RW-1RS



PHOTO - RW-1RD



Temp fiber box removed.

PHOTO - RW-1RD	PHOTO - Junction box with splices complete.
	
Finished work with labels.	Finished work with tie wraps. Just needs a cover.

PHOTO - Site secured



END REPORT

LM Great Neck VFD - 03/22/2021

CONTRACTOR PRODUCTION REPORT

LOCKHEED MARTIN – GREAT NECK, NEW YORK SITE

LM Great Neck VFD - 03/23/2021

PROJECT			
Project Name	LM Great Neck VFD	**Date**	03/23/2021
Number	0888827878	**AM Weather**	Cloudy
Superintendent	Marshall Gibson	**PM Weather**	Partly cloudy
Onsite Time	07:00	**Temperature**	max: 60°F min: 40°F
Summary of Work: Demolition in RW-1RS continued. Preparation for tomorrow's shutdown.			
Site Visitors:			

Changed Conditions/Delays/Conflicts Encountered

SAFETY	SHSO: Nicholas McCarthy
Was a Job Safety Meeting Held This Date?	Yes
Was an EnSafe SWAP Completed?	Yes
Was work performed involving Confined Space Entry, Excavations, Lock Out Tag Out, chemical exposures, or heights? (See SWAP for details)	Yes
Are there any lost-time accidents this date?	No
Actions & Inspection:	

CONTRACTORS ONSITE

Company	Personnel	Onsite	Offsite	Duration (hrs)
See Nicholas McCarthy daily report				

EQUIPMENT ONSITE

Equipment	Safety Check	Used Hrs	Idle Hrs	Repair Hrs
See Nicholas McCarthy daily report				

EQUIPMENT/MATERIALS RECEIVED

Description	Lot/ID	Received By	Quantity
See Nicholas McCarthy daily report			

CONTRACTOR PRODUCTION REPORT

LOCKHEED MARTIN – GREAT NECK, NEW YORK SITE

LM Great Neck VFD - 03/23/2021

SAMPLING, TESTING & INSPECTIONS	
Description	**Company/Personnel**
See Nicholas McCarthy daily report	

WASTE ACCUMULATED, STOCKPILED AND TRANSPORTED OFFSITE
Description
See Nicholas McCarthy daily report

SUMMARY OF WORK ACTIVITIES		
Time	**Title**	**Notes**
07:00		Marshall Gibson at DW-15; see daily report for DW-15.
09:00	Drilling	Receive call from Nick McCarthy, EnSafe VFD. EnviroTrac at OU1 to do RW-100 mark out. MBG to OU1
09:15	OU1 Utility Markout	Meet with EnviroTrac: Jim Wilkinson and Mike Alliegro Utility Detection, Inc. Rob Fontain Markout area adjacent to Treatment Building for harmonic filter. Once complete - head over to OU2. Complete H&S meeting before driving over. Bob Hermann with Hinck comes by and asks to join for OU2 Markout - MBG agrees
09:45	OU2 Utility Markout	MBG/EnviroTrac/Utility Detection/Hinck at OU2 for utilitymarkout. MBG opens RW-100 vault to allow for visual assessment by BH (Hinck)
11:15	OU2 Utility Markout	Hinck offsite, back to OU1
11:41	OU2 utility markout	Mark out complete MBG/EnviroTrac/Utility Detection offsite. Vault to RW-100 and gates secured
11:51	DW15	MBG back at DW15 to check on progress; see daily report for DW-15.

		MBG stops by vault RW-1RS to check on progress/see how NM is doing.
13:30	Check in with Nick	NM indicates no issues, that Hinck has mostly demoed elec. components in vault that can be locked out from sub panel in vault. According to Hinck, they will be ready to shutdown RW-1RS tomorrow morning. MBG to DW15; see daily report for DW-15.

PHOTO - OU2	PHOTO - OU2
	
Slash pile	Entrance to RW-100

PHOTO - OU2	PHOTO - OU2
	
RW-100 vault	There is some gravel base but not super-firm

PHOTO - OU2	PHOTO - OU2
	
Note “banking” along area for pad. Approx. 18” above vault elevation. Poses issue for amount of material that can lost within gated area. Concern for erosion afterwards - retaining wall or contoured with burlap fabric??	Possible area to place slash pile

PHOTO - OU2	PHOTO - OU2 utility markout
	
Electric road box in front of vault	View of utility flagging

PHOTO - OU2 utility markout	PHOTO - OU2 utility markout
	
View of utility flagging	View of utility flagging

PHOTO - OU1 markout	PHOTO - OU1 markout
	
OU1 utility markout	OU1 utility markout

END REPORT

LM Great Neck VFD - 03/23/2021

CONTRACTOR PRODUCTION REPORT

LOCKHEED MARTIN – GREAT NECK, NEW YORK SITE

LM Great Neck VFD - 03/23/2021

PROJECT			
Project Name	LM Great Neck VFD	**Date**	03/23/2021
Number	0888827878	**AM Weather**	Mild fog
Superintendent	Nicholas McCarthy	**PM Weather**	Sunny
Onsite Time	07:00	**Temperature**	max: 60°F min: 35°F
Summary of Work: Demolition in RW-1RS continued. Preparation for tomorrow's shutdown.			
Site Visitors: Dave and Wayne - PES			

Changed Conditions/Delays/Conflicts Encountered

SAFETY	SHSO: Nicholas McCarthy
Was a Job Safety Meeting Held This Date?	Yes
Was an EnSafe SWAP Completed?	Yes
Was work performed involving Confined Space Entry, Excavations, Lock Out Tag Out, chemical exposures, or heights? (See SWAP for details)	Yes
Are there any lost-time accidents this date?	No
Actions & Inspection:	

CONTRACTORS ONSITE

Company	Personnel	Onsite	Offsite	Duration (hrs)
Hinck	2	07:00	15:17	8

EQUIPMENT ONSITE

Equipment	Safety Check	Used Hrs	Idle Hrs	Repair Hrs
Ford E super duty box truck	Hinck	8	0	0

EQUIPMENT/MATERIALS RECEIVED

Description	Lot/ID	Received By	Quantity
Hinck receives a delivery from a Hinck pickup. One small box of consumables.		Hinck	1

CONTRACTOR PRODUCTION REPORT

LOCKHEED MARTIN – GREAT NECK, NEW YORK SITE

LM Great Neck VFD - 03/23/2021

SAMPLING, TESTING & INSPECTIONS	
Description	**Company/Personnel**
NA	

WASTE ACCUMULATED, STOCKPILED AND TRANSPORTED OFFSITE
Description
RW-100 demolition waste: metal conduit, corroded pipe and circuits

SUMMARY OF WORK ACTIVITIES		
Time	**Title**	**Notes**
07:00	OU1	Hinck's Bob Herrmann (BH) and Gabe Costa (GC) as well as EnSafe (NPM) rally at our meeting point at OU1. NPM conducts safety meeting with BH and GC. GC heads out with Hinck's box truck to get gas.
07:10	RW-1RS	Hinck and NPM convoy to RW-1RD. NPM opens the vault to naturally ventilate for 5 mins. The 4 gas meter is then bump checked. All readings come back normal: 02: 20.9% CO: 0ppm H2S: 0 ppm LEL: 0% VOC: 0ppm The monitor's tubing is lowered into the vault. The monitor still reads fine after a few minutes, EnSafe gives Hinck clearance to enter the vault and begin work.
07:29	RW-1RS	Hinck starts the day by unloading tools off box truck and lowering them down into the vault. Hinck shuts down main breaker to the sub panel killing power in the vault. BH locks it out with single breaker lockout device to ensure it won't get accidentally flipped on.
08:52	PES and EnviroTrac	Dave and Wayne with PES come over to RW-1RD. They take a few readings down inside the vault and head off site. Tom Wilkinson with EnviroTrac is on site to check out the vaults and see progress. Tom asks NPM how to get to RW-100 because he needs to do his mark outs for the site work. I call Marshall with EnSafe. Marshall and Tom will meet at OU1 and go from there.
09:42	BH heads to RW-100	BH heads to RW-100 to assess the project and see what he needs when that vault starts. GC remains in vault RW-1RS and

		new PVC conduit. Readings on 4 gas meter have remained normal so far with today's work. VOCs have peaked today at 4 ppm with all other readings remaining constant
09:56	Delivery	Hinck receives a delivery from one of their pickup trucks. It consisted of one small box of consumables.
11:29	RW-1RS	GC is working on pulling some wire to feed some circuits within the vault.
12:26	RW-1RS	BH is back on site from RW-100. GC is working on demoing some metal conduit within the vault. He is placing the demolished pieces outside the vault onto the grass. Not onto the rim on the vault.
13:46	Demo	Hinck is adding PVC and removing the corroded pipe with all circuits that come off of the sub panel
14:20	Clean up	Hinck begins to clean up and raise tools out of the vault. They will be doing the switch over of the fiber tomorrow to demo the rest of the corroded material.
14:47	Offsite	Hinck and EnSafe both from site. Site is locked and secured.

PHOTO - RW-1RS	PHOTO - RW-1RS
	
New PVC put in today.	A few receptacles, the sump pump switch and GFCI.

CONTRACTOR PRODUCTION REPORT

LOCKHEED MARTIN – GREAT NECK, NEW YORK SITE

LM Great Neck VFD - 03/23/2021

PHOTO - RW-1RS	PHOTO - RW-1RS
	
Junction box with wires pulled it.	Light installed.

CONTRACTOR PRODUCTION REPORT

LOCKHEED MARTIN – GREAT NECK, NEW YORK SITE

LM Great Neck VFD - 03/23/2021

PHOTO - Site secured.



END REPORT

LM Great Neck VFD - 03/23/2021

CONTRACTOR PRODUCTION REPORT

LOCKHEED MARTIN – GREAT NECK, NEW YORK SITE

LM Great Neck VFD - 03/24/2021

PROJECT			
Project Name	LM Great Neck VFD	**Date**	03/24/2021
Number	0888827878	**AM Weather**	Mild fog
Superintendent	Nicholas McCarthy	**PM Weather**	Sunny
Onsite Time	07:00	**Temperature**	max: 50°F min: 30°F

Summary of Work: Fiber transferred to temp box. Well pump and power going to RW-1RS from OU1 is locked out and tagged. Demolition of control panel.

Site Visitors: Craig Moore - CDM Smith
Paul Lanziallotta - Eagle Control

Changed Conditions/Delays/Conflicts Encountered

SAFETY	SHSO: Nicholas McCarthy
Was a Job Safety Meeting Held This Date?	Yes
Was an EnSafe SWAP Completed?	Yes
Was work performed involving Confined Space Entry, Excavations, Lock Out Tag Out, chemical exposures, or heights? (See SWAP for details)	Yes
Are there any lost-time accidents this date?	No

Actions & Inspection:

CONTRACTORS ONSITE

Company	Personnel	Onsite	Offsite	Duration (hrs)
Hinck	2	07:00	15:00	8

EQUIPMENT ONSITE

Equipment	Safety Check	Used Hrs	Idle Hrs	Repair Hrs
Ford E super duty box truck	Hinck	8	0	0

EQUIPMENT/MATERIALS RECEIVED

Description	Lot/ID	Received By	Quantity
NA			

CONTRACTOR PRODUCTION REPORT

LOCKHEED MARTIN – GREAT NECK, NEW YORK SITE

LM Great Neck VFD - 03/24/2021

SAMPLING, TESTING & INSPECTIONS	
Description	**Company/Personnel**
NA	

WASTE ACCUMULATED, STOCKPILED AND TRANSPORTED OFFSITE
Description
RW-1RD demolition waste: corroded control panel and few corroded conduits

SUMMARY OF WORK ACTIVITIES		
Time	**Title**	**Notes**
07:00	OU1	Hinck's Gabe Costa (GC) and Bob Herrmann (BH) as well as EnSafe's Nick McCarthy (NPM) rally at OU1. NPM conducts a safety meeting and they head to RW-1RS.
07:17	Eagle	Mike from Eagle stops by RW-1RS to drop off the internals of the control panel that Hinck will installing today. Mike then heads to OU1 to speak with Wayne about shutdown. NPM bump checks the 4 gas meter and the readings are within 2% of the calibration gas limits. NPM drops the hose into RW-1RS. NPM then opens RW-1RD to let ventilate. The monitor is reading normal in RW-1RS. NPM gives Hinck clearance to go into vault. Hinck locks out main breaker on sub panel.
08:12	Eagle back on site	Mike with Eagle is back on site. He informs Hinck that Eagle has confirmed with PES that they are ready to switch the panel over. Hinck takes apart the splice that ran from RW-1RD to RW-1RS so there is no power in RW-1RS while they work. Eagle disconnects the fiber from their panel. Hinck reroutes it to the temp fiber box and makes the connection. Mike heads to OU1 to see if the communication from OU1 to RW-1RS is good.
10:08	RW-1RS	Mike with Eagle back on site. He informs Hinck and EnSafe that Dave a with PES says communication from both ends is fine. Mike is offsite. Both water pump and power panel are locked out and tagged at OU1.
10:33	RW-1RS	Hinck continues demo in RW-1RD. They have removed the corroded control panel and removed it from the vault. They have also removed a few corroded conduits.
11:13	Demo continues	Hinck continues demo in RW-1RS. Craig Moore with CDM is on site to observe progress.
12:41	RW-1RS	Hinck continues work in RW-1RS. They are preparing to mount the control panels outer box.

13:13	RW-1RS	Hinck has installed the unistrut and is now mounting the back box for Eagle's control panel.
14:18	RW-1RS	Hinck has mounted Eagle's back box. They have also installed new unistrut behind the power panel and have removed the old unistrut from the vault. Gas monitoring has remained low all day. No PVC glue was used. VOCs only reason reached 3 ppm and held at 0 ppm for the majority of the day.
14:21	Demobilization	Hinck begins to raise their tools out of the vault. They will resume work tomorrow morning.
14:42	Offsite	Hinck is offsite. NPM grabs post work photos and secures the vault. NPM is also off site.

PHOTO - RW-1RS	PHOTO - RW-1RS
	
First piece of unistrut installed behind the panel as well as junction box with wires pulled into it.	Fiber box with the connections made up.

PHOTO - RW-1RS



Eagle's control panel that Hinck installed.

PHOTO - RW-1RS



3 boxes being re used for this project. The far right being the disconnect.

PHOTO - RW-1RS	PHOTO - RW-1RS
	
Circuits with switching/receptacles installed.	The lock out mechanism for the main breaker in the vaults panel.

PHOTO - RW-1RS



Site secured.

END REPORT

LM Great Neck VFD - 03/24/2021

CONTRACTOR PRODUCTION REPORT

LOCKHEED MARTIN – GREAT NECK, NEW YORK SITE

LM Great Neck VFD - 03/25/2021

PROJECT			
Project Name	LM Great Neck VFD	**Date**	03/25/2021
Number	0888827878	**AM Weather**	Mild fog
Superintendent	Nicholas McCarthy	**PM Weather**	Sunny
Onsite Time	07:00	**Temperature**	max: 50°F min: 30°F
Summary of Work: Ran conduit and unistrut.			
Site Visitors: Craig Moore - CDM Smith			
Changed Conditions/Delays/Conflicts Encountered			

SAFETY	SHSO: Nicholas McCarthy
Was a Job Safety Meeting Held This Date?	Yes
Was an EnSafe SWAP Completed?	Yes
Was work performed involving Confined Space Entry, Excavations, Lock Out Tag Out, chemical exposures, or heights? (See SWAP for details)	Yes
Are there any lost-time accidents this date?	No
Actions & Inspection:	

CONTRACTORS ONSITE

Company	Personnel	Onsite	Offsite	Duration (hrs)
Hinck	2	07:00	15:00	8

EQUIPMENT ONSITE

Equipment	Safety Check	Used Hrs	Idle Hrs	Repair Hrs
Ford E super duty – Hinck's box truck.	Hinck	8	0	0

EQUIPMENT/MATERIALS RECEIVED

Description	Lot/ID	Received By	Quantity
NA			

CONTRACTOR PRODUCTION REPORT

LOCKHEED MARTIN – GREAT NECK, NEW YORK SITE

LM Great Neck VFD - 03/25/2021

SAMPLING, TESTING & INSPECTIONS	
Description	**Company/Personnel**
NA	

WASTE ACCUMULATED, STOCKPILED AND TRANSPORTED OFFSITE
Description
NA

SUMMARY OF WORK ACTIVITIES		
Time	**Title**	**Notes**
07:01	On site	Hinck (Gabe Costa and Bob Herrmann)and EnSafe(NPM and MBG) meet at OU1 rally point. NPM conducts safety meeting
07:15	Mobilization	Hinck and NPM convoy to RW-1RD. NPM opens the vault to naturally ventilate for 5 mins. The 4 gas meter is then bump checked. All readings come back normal: 02: 20.9% CO: 0ppm H2S: 0 ppm LEL: 0% VOC: 2 ppm The monitors tubing is lowered into the vault. The monitor still reads fine after a few minutes, EnSafe gives Hinck clearance to enter the vault and begin work. The power and pump remain locked out and tagged from yesterday.
07:29	RW-1RS	Hinck starts the day by unloading tools off box truck and lowering them down into the vault. They get a drop light set up down in the vault for sufficient light to work.
08:06	RW-1RS	Hinck begins to unbolt the power panel in the vault to replace another piece of unistrut and hardware behind it.
08:18	CDM Smith	Craig Moore on site for a visit. He takes some pictures and heads off site.
09:23	RW-1RS	MBG onsite, NPM go to DW15 to oversee drilling. Before leaving NPM provides MBG with H&S meeting Hinck working in vault installing unistrut. 4-gas meter reading ok

		Hinck continues with installing unistrut and conduit.
10:33	RW-1RS	Hinck using PVC glue and noting on 4-gas slight bump in VOCs ranging from 1.2 - 4.6 ppm. All other measurements good/normal on 4-gas
12:06	RW-1RS	Hinck continues to work on installing pvc piping. They have ran pipe between the owner panel and Eagle panel.
14:07	RW-1RS	Hinck has ran a second conduit from the power panel to Eagle panel.
14:14	Demobilization	Hinck begins to clean up and raise tools up out of the vault.
15:00	Offsite	Hinck and EnSafe are both offsite.

PHOTO - RW-1RS



Conduit replaced where it enters vault.

PHOTO - RW-1RS



Conduit ran between power panel and control panel.

PHOTO - RW-1RD



More conduit jumped between preexisting units.

PHOTO - RW-1RD	PHOTO - RW-1RD
	
Inside of control panel.	Site secured

END REPORT

LM Great Neck VFD - 03/25/2021

CONTRACTOR PRODUCTION REPORT

LOCKHEED MARTIN – GREAT NECK, NEW YORK SITE

LM Great Neck VFD - 03/26/2021

PROJECT			
Project Name	LM Great Neck VFD	**Date**	03/26/2021
Number	0888827878	**AM Weather**	Fog
Superintendent	Marshall Gibson	**PM Weather**	Sunny
Onsite Time	07:00	**Temperature**	max: 65°F min: 55°F
Summary of Work: Continue electrical work at vault RW-1RS			
Site Visitors: Tom Whitaker - AMEC			
Changed Conditions/Delays/Conflicts Encountered			

SAFETY	SHSO: Marshall Gibson
Was a Job Safety Meeting Held This Date?	Yes
Was an EnSafe SWAP Completed?	Yes
Was work performed involving Confined Space Entry, Excavations, Lock Out Tag Out, chemical exposures, or heights? (See SWAP for details)	No
Are there any lost-time accidents this date?	No
Actions & Inspection:	

CONTRACTORS ONSITE

Company	Personnel	Onsite	Offsite	Duration (hrs)
Hinck Electric	2	07:00	12:00	5

EQUIPMENT ONSITE

Equipment	Safety Check	Used Hrs	Idle Hrs	Repair Hrs
Box truck with supplies	Hinck	8	0	0

EQUIPMENT/MATERIALS RECEIVED

Description	Lot/ID	Received By	Quantity
NA			

CONTRACTOR PRODUCTION REPORT

LOCKHEED MARTIN – GREAT NECK, NEW YORK SITE

LM Great Neck VFD - 03/26/2021

SAMPLING, TESTING & INSPECTIONS	
Description	**Company/Personnel**
NA	

WASTE ACCUMULATED, STOCKPILED AND TRANSPORTED OFFSITE
Description
NA

SUMMARY OF WORK ACTIVITIES		
Time	**Title**	**Notes**
07:00	Mobilization	MBG on-site Hinck on-site Foreman - Bob Hermann (BH) Assistant - Gabe Costas (GC)
07:10	Tailgate meeting	MBG completes tailgate meeting with team Calibrate 4-gas meter while Hinck warms up truck, etc.
07:20	Mobilization to RW-1RS	MBG/Hinck to RW-1RS. MBG opens vault and allow it to passively ventilate for 5-min. Then check with 4-gas meter. O2 = 20.9% CO = 0.0ppm H2S = 0.0ppm LEL = 0.0% VOCs = 0.0 ppm Give Hinck clearance to enter vault
07:35	EW-1R vault	MBG / BH go to vault EW-1R so that BH can inspect layout. MBG opens vault, allow to passively ventilate for 5-min, then screen with 4-gas meter. All reading OK, allow BH access.
08:00	RW-1RS	MBG / BH return to vault RW-1RS GC working on wiring.
08:45	AMEC	Tom Whitaker on-site. MBG gives H&S briefing.

10:27	Air Monitoring	MBG checks 4-gas meter: all readings normal
10:45	RW-1RS	Hinck - BH offsite for day. GC still on-site and continuing wiring in control panel
11:51	AMEC	Tom Whitaker offsite
11:52	RW-1RS	GC indicates all wiring complete and starts breaking down for day. GC states that everything is all set for pump start-up on Tuesday.
12:10	Demobilization	Hinck offsite for day. MBG secures vault RW-1RS and headed to DW15 site

PHOTO - End of day	PHOTO - End of day
	
Replaced conduit	Replaced conduit

CONTRACTOR PRODUCTION REPORT

LOCKHEED MARTIN – GREAT NECK, NEW YORK SITE

LM Great Neck VFD - 03/26/2021

PHOTO - End of day	PHOTO - End of day
	
Replacement control panel	Replaced conduit

PHOTO - End of day	PHOTO - End of day
	
Replacement control panel	RW-1RS secured

END REPORT

LM Great Neck VFD - 03/26/2021

CONTRACTOR PRODUCTION REPORT

LOCKHEED MARTIN – GREAT NECK, NEW YORK SITE

LM Great Neck VFD - 03/29/2021

PROJECT			
Project Name	LM Great Neck VFD	**Date**	03/29/2021
Number	0888827878	**AM Weather**	P. Cloudy/windy
Superintendent	Marshall Gibson	**PM Weather**	
Onsite Time	08:45	**Temperature**	max: 55°F min: 44°F
Summary of Work: Excavation for concrete pad at OU2/RW-100			
Site Visitors:			
Changed Conditions/Delays/Conflicts Encountered			

SAFETY	SHSO: Marshall Gibson
Was a Job Safety Meeting Held This Date?	Yes
Was an EnSafe SWAP Completed?	Yes
Was work performed involving Confined Space Entry, Excavations, Lock Out Tag Out, chemical exposures, or heights? (See SWAP for details)	No
Are there any lost-time accidents this date?	No
Actions & Inspection:	

CONTRACTORS ONSITE

Company	Personnel	Onsite	Offsite	Duration (hrs)
EnviroTrac	4	08:00	13:30	6

EQUIPMENT ONSITE

Equipment	Safety Check	Used Hrs	Idle Hrs	Repair Hrs
Kobota U35-4 mini-excavator (rental)	EnviroTrac	6	0	0
Bobcat T595 skid steer	EnviroTrac	6	0	0
Ford F-250 pickup with trailer (for Bobcat)	EnviroTrac	8	0	0
1 300-gal tote (for water for Hinck to use for core-drilling)	EnviroTrac	8	0	0
Ford F-250 pickup with cap (assorted hand tools and equipment, etc.)	EnviroTrac	8	0	0

CONTRACTOR PRODUCTION REPORT

LOCKHEED MARTIN – GREAT NECK, NEW YORK SITE

LM Great Neck VFD - 03/29/2021

EQUIPMENT/MATERIALS RECEIVED			
Description	**Lot/ID**	**Received By**	**Quantity**
Kubota U35-4 mini excavator		EnviroTrac	1

SAMPLING, TESTING & INSPECTIONS	
Description	**Company/Personnel**
NA	

WASTE ACCUMULATED, STOCKPILED AND TRANSPORTED OFFSITE
Description
NA

SUMMARY OF WORK ACTIVITIES		
Time	**Title**	**Notes**
08:45	Mobilization	MBG to OU1 to with EnviroTrac team PM - Jim Wilkinson (JM) Foreman - Mike Alliegro (MA) Operator - Ken Davies (KD) Assistant - Steve Smith (SS)
08:50	Mobilization	Conduct H&S meeting with team - see SWAP
09:00	Mobilization	According to JW - EnviroTrac was onsite at 0800 MA states that mini-excavator delivery was early and that he had already received the mini at RW-100, and had returned to OU1. Team departs OU1 to travel to RW-100
09:20	Mobilization	Team arrive at RW-100. MBG collects pre-construction photos of site/unlock gates, etc. EnviroTrac begins organizing equipment. During this MBG and EnviroTrac review work plan for day. Goal for today is to install silt fencing, move brush pile out of fenced area, and excavate area for concrete pad, adjacent to RW-100 vault.

09:45	EnviroTrac	JW offsite. JW indicates that hoping to get backfill delivered tomorrow. Asphalt cut at OU1 treatment building may occur this week, depending on approvals. JW indicates EnviroTrac has large building permit sign for OU1.
09:50	Excavation	EnviroTrac moves brush pile to outside fenced area with mini-. Also working on installing silt fencing.
10:22	Excavation	EnviroTrac utilizes skid steer to get 300-gal tote out of truck. Also, lay plywood over travel area above the water main from RW-100
10:38	Excavation	Begin excavating for concrete pad
11:43	Excavation	Approx. 3ft below grade at southern end of vault - EnviroTrac going to start hand digging to locate electrical conduits
12:05	Excavation	Encounter conduit at approx. 38”. Keep excavating.
12:20	Excavation	Encounter a second conduit - this one was previously cracked and repaired with duct tape. There is wire in conduit. It appears that the fitting at where the plastic conduit in the excavation meets the metal conduit at the vault did not align properly at time of install and used duct tape to complete the connection. Send RM a photo and call him to discuss.
13:47	Demobilization	EnviroTrac is done excavating for concrete pad. They cover stockpiled soil (to be used for re-grading) and setup caution tape around open excavation. Both the mini- and the skid steer are within the fenced area. Estimate approx. 6-8 cu. yds. soil excavated and stockpiled for re-grading
13:52	Demobilization	EnviroTrac offsite MBG secures gates/offsite to DW15
14:00	Porta-Potty	Receive call from porta-potty delivery guy - meet him at school and bring him to RW-100.
14:32	Porta-potty	Delivery complete. MBG to DW15

PHOTO - Silt fencing	PHOTO - Silt fencing
	
Silt fencing complete (facing north-northwest)	Silt fencing complete (facing northeast)

CONTRACTOR PRODUCTION REPORT

LOCKHEED MARTIN – GREAT NECK, NEW YORK SITE

LM Great Neck VFD - 03/29/2021

PHOTO - Excavation	PHOTO - Electrical line
	
Begin excavation work	Locate electrical conduit approx. 38-40” below grade

PHOTO - Electrical line	PHOTO - Broken conduit
	
Follow conduit back towards eastern side of vault and it slopes upwards to approx. 29” below top of vault. Likely the conduit that was for expansion / is empty.	

PHOTO - Broken conduit	PHOTO - End of day
	
	Excavation end of day

PHOTO - End of day	PHOTO - Porta-potty
	
Equipment end of day	

END REPORT

LM Great Neck VFD - 03/29/2021

CONTRACTOR PRODUCTION REPORT

LOCKHEED MARTIN – GREAT NECK, NEW YORK SITE

LM Great Neck VFD - 03/30/2021

PROJECT			
Project Name	LM Great Neck VFD	**Date**	03/30/2021
Number	0888827878	**AM Weather**	Sunny
Superintendent	Nicholas McCarthy	**PM Weather**	Sunny
Onsite Time	06:56	**Temperature**	max: 50°F min: 30°F

Summary of Work: Float switch and emergency stop installed. Fiber swapped to control panel. Everything checked. Communication between RW-1RS confirmed. RW-1RS is running.

Site Visitors: Paul Lanzillotta – Eagle Control
Dave and Wayne - PES
Craig Moore - CDM Smith

Changed Conditions/Delays/Conflicts Encountered

SAFETY	SHSO: Nicholas McCarthy
Was a Job Safety Meeting Held This Date?	Yes
Was an EnSafe SWAP Completed?	Yes
Was work performed involving Confined Space Entry, Excavations, Lock Out Tag Out, chemical exposures, or heights? (See SWAP for details)	Yes
Are there any lost-time accidents this date?	No

Actions & Inspection:

CONTRACTORS ONSITE

Company	Personnel	Onsite	Offsite	Duration (hrs)
Hinck	2	07:00	15:00	8

EQUIPMENT ONSITE

Equipment	Safety Check	Used Hrs	Idle Hrs	Repair Hrs
Ford E super duty box truck	Hinck	8	0	0

EQUIPMENT/MATERIALS RECEIVED

Description	Lot/ID	Received By	Quantity
NA			

CONTRACTOR PRODUCTION REPORT

LOCKHEED MARTIN – GREAT NECK, NEW YORK SITE

LM Great Neck VFD - 03/30/2021

SAMPLING, TESTING & INSPECTIONS	
Description	**Company/Personnel**
RW-1RS Startup and Testing	Project Team

WASTE ACCUMULATED, STOCKPILED AND TRANSPORTED OFFSITE
Description
EW-1 demolition waste: conduit and wire (see photo)

SUMMARY OF WORK ACTIVITIES		
Time	**Title**	**Notes**
06:59	OU1	Hinck's Bob Herrmann (BH) and Gabe Costa (GC) are on site at OU1. EnSafe's (NPM) is on site. They both head to RW-1RS.
07:22	RW-1RS	Hinck pulls box truck up to the vault and begins unloading tools. The vault is opened to ventilate before Hinck starts work. NPM tries to calibrate the 4 gas meter. The LEL fails during the multi sensor span. All other readings come back within 1% of span gas readings. NPM tires multiple ways to calibrate the LEL. After several attempts, LEL still fails. Marshall with EnSafe calls Pine. They said it probably is a failing sensor. Marshall will pick up a new gas meter from Pine at 12 today. NPM gives Hinck clearance to start work based on the history of the air monitoring of the vaults. BH heads to OU1 to speak with Eagle.
08:25	Dave on site	Dave with PES is on site. NPM tells him the situation with the 4 gas meter. He brought one so the monitoring will be covered until Marshall gets back with new gas meter. Dave puts monitoring hose into the vault. The readings come back normal. 02: 20.9% CO: 0ppm LEL: 0% H2S: 0ppm BH returns to RW-1RS. He informs NPM that he has removed his lock on the well pump and the power locks going to RW-1RS. Wayne with PES has also removed his locks on the well pump breaker and the power breaker for RW-1RS. Dave remains on site to take readings within the vault.
08:45	Power	The power to RW-1RS has been flipped on as well as power to the well pump. There is now power going to RW-1RD. Paul with Eagle is on site.

09:00	PES gives clearance	PES had to change out some bag filters before Hinck can start work with wiring in the emergency stop and the float switch. PES gives Hinck clearance to start work.
09:41	RW-1RS	Hinck begins to connect the emergency stop and the float switch. Once they are done the fiber will be changed from temp box to Eagle panel.
10:03	Fiber	Hinck has removed the temporary fiber box and taken it out of the vault. They will now be transferring the fiber connection to Eagle's control panel. Paul with Eagle will then check the connections and confirm communication between the RW-1RS and OU1.
10:30	Delivery	Hinck receives delivery from a Hinck pickup truck. It consists of the miscellaneous material and the core bore drill they will use for RW-100
11:05	RW-1RS	Paul from Eagle informs NPM that he can confirm the float switch and emergency stop do work at RW-1RS's end. Paul heads over to OU1 and will be in communication with Hinck to see if there is communication between RW-1RS and OU1. Paul is offsite. Hinck works on some of the remaining demolition that needs to be done.
11:26	RW-1RS	Hinck is performing amperage readings with Dave as a preliminary test before start up.
12:03	EW-1	NPM and GC head to EW-1 so GC can start bringing tools and material into the vault for set up. NPM arrives first, he opens vault to let ventilate for 5 mins. NPM then outs Dave's four gas meter into the vault. The readings come back normal. GC begins to bring material down into the vault.
12:41	EW-1	GC begins demo in EW-1. He confirms with NPM that the breakers in sub panel are shut off. He will only be demoing the circuits coming off the sub panel. He starts with demoing the conduit that is up top near the vault hatch.
14:00	Demobilization	GC begins cleanup process.
15:00	Offsite	Hinck and EnSafe are both offsite.

PHOTO - EW-1



Vault entrance.

PHOTO - EW-1



Interior of vault facing OU1 direction

PHOTO - EW-1



PHOTO - EW-1



Photo facing Marcus Avenue.

PHOTO - EW-1

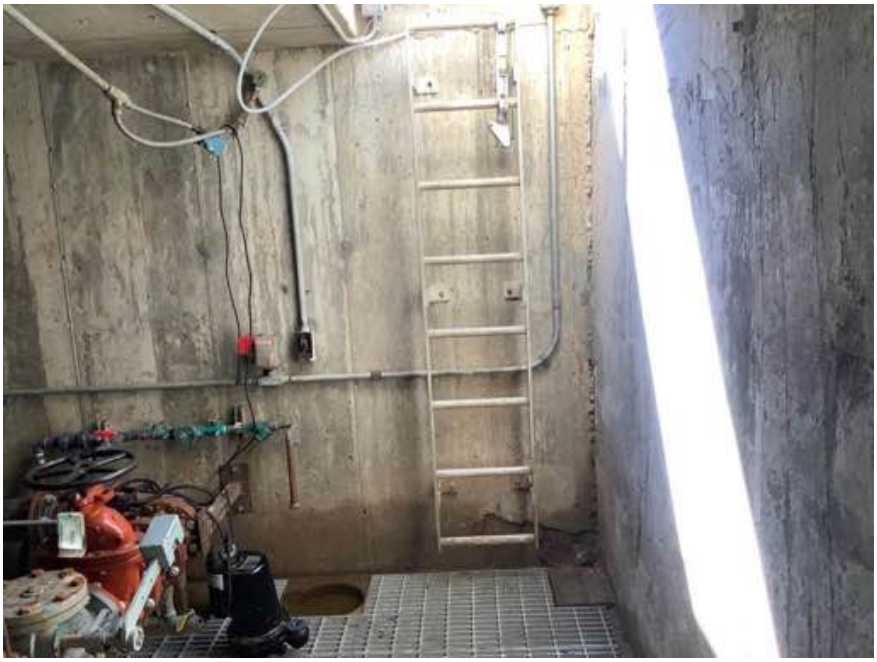

Vault's entrance. Photo facing Northwell Building.

PHOTO - EW-1



Wall facing Northwell Building.

PHOTO - EW-1	PHOTO - EW-1
	
Control panel on wall facing OU1	Power panel on wall facing Marcus Avenue

PHOTO - EW-1



Ceiling light and conduit.

PHOTO - EW-1



Conduit runs.

PHOTO - EW-1



Preexisting disconnect among other panels that will be re used.

PHOTO - EW-1	PHOTO - EW-1
	
Conduit near vault entrance.	GFI and sump pump switch.

PHOTO - EW-1	PHOTO - EW-1
	
Showing how corroded some components are.	Waste generated from today.

PHOTO - EW-1



Post demo of sump pump switch and GFCI.

END REPORT

LM Great Neck VFD - 03/30/2021

CONTRACTOR PRODUCTION REPORT

LOCKHEED MARTIN – GREAT NECK, NEW YORK SITE

LM Great Neck VFD OU2 - 03/31/2021

PROJECT			
Project Name	LM Great Neck VFD OU2	**Date**	03/31/2021
Number	0888827878	**AM Weather**	Sunny
Superintendent	Nicholas McCarthy	**PM Weather**	Sunny
Onsite Time	07:00	**Temperature**	max: 50°F min: 30°F
Summary of Work: Core drilling at RW-100			
Site Visitors:			

Changed Conditions/Delays/Conflicts Encountered

SAFETY	SHSO: Nicholas McCarthy
Was a Job Safety Meeting Held This Date?	Yes
Was an EnSafe SWAP Completed?	Yes
Was work performed involving Confined Space Entry, Excavations, Lock Out Tag Out, chemical exposures, or heights? (See SWAP for details)	Yes
Are there any lost-time accidents this date?	No
Actions & Inspection:	

CONTRACTORS ONSITE

Company	Personnel	Onsite	Offsite	Duration (hrs)
Hinck	1	07:00	15:00	8

EQUIPMENT ONSITE

Equipment	Safety Check	Used Hrs	Idle Hrs	Repair Hrs
Ford E Super Duty box truck	Hinck	8	0	0

EQUIPMENT/MATERIALS RECEIVED

Description	Lot/ID	Received By	Quantity
NA			

CONTRACTOR PRODUCTION REPORT

LOCKHEED MARTIN – GREAT NECK, NEW YORK SITE

LM Great Neck VFD OU2 - 03/31/2021

SAMPLING, TESTING & INSPECTIONS	
Description	**Company/Personnel**
NA	

WASTE ACCUMULATED, STOCKPILED AND TRANSPORTED OFFSITE
Description
NA

SUMMARY OF WORK ACTIVITIES		
Time	**Title**	**Notes**
07:00	Onsite	Hinck's Bob Herrmann (BH) and EnSafe's Nick McCarthy arrive at OU1. Hinck's Gabe Costa will not be coming in today. NPM conducts safety meeting with BH. BH starts box truck and leads the convoy to RW-100 (OU2).
07:19	RW-100	BH and NPM arrive at RW-100. NPM bump checks the 4 gas meter, the readings come back normal. Refer to Confined space program to see initial entry readings. NPM places gas meters hose in vault and proper ventilation. NPM gives BH clearance to enter vault when he's ready.
07:44	RW-100	Hinck is unloading tools to prepare for work. He informs overlooks work plan to make sure he knows the objective. BH enters vault to begin measuring out the Borings.
08:14	RW-100	BH begins marking out drawings on the exterior of the vault.
10:09	Drilling	BH is mounting coring drill to the exterior of the vault, prepping to core the first hole.
10:35	1st Boring	1st boring is complete. From when the drill started, to when it came through to the interior of the vault took 7 minutes.
11:01	2nd boring	The 2nd boring is complete. BH moves onto the 3rd
11:13	3rd boring	3rd boring is complete. BH moves onto the fourth
11:35	4th boring	4th boring complete. BH moves onto the 5th
12:01	5th boring	5th boring is complete. BH moves onto the 6th
12:27	6th Boring	6th boring is complete. BH moves onto the 7th
12:45	7th Boring	7th boring is complete. BH moves onto the 8th.
13:06	8th Boring	The 8th (final) boring is complete.
14:03	Demobilization	BH begins the cleanup process.

14:40	Offsite	Hinck is offsite. NPM remains on site to secure it.
14:51	Site secured	NPM secures sites and heads over to meet with Marshall Gibson.
15:00	Waste cover	NPM and Marshall cover the waste that has been generated from the vaults with a sheet of thick plastic. We weight it down. NPM is offsite.

CONTRACTOR PRODUCTION REPORT

LOCKHEED MARTIN – GREAT NECK, NEW YORK SITE

LM Great Neck VFD OU2 - 03/31/2021

PHOTO - Pre bore photo	PHOTO - Site overview
	
Photo taken prior to drilling. It captures the open pit as well as the exposed vault wall.	General site photo.

PHOTO - Borings



8 borings complete. Shown from outside the vault.

PHOTO - Cores



8 cores that were generated.

PHOTO - Interior photo



Borings from the interior.

CONTRACTOR PRODUCTION REPORT

LOCKHEED MARTIN – GREAT NECK, NEW YORK SITE

LM Great Neck VFD OU2 - 03/31/2021

PHOTO - 8th boring	PHOTO - End of day
	
8th boring that is hiding behind conduit.	Site secured.

END REPORT

LM Great Neck VFD OU2 - 03/31/2021

CONTRACTOR PRODUCTION REPORT

LOCKHEED MARTIN – GREAT NECK, NEW YORK SITE

LM Great Neck VFD - 04/01/2021

PROJECT			
Project Name	LM Great Neck VFD OU2	**Date**	04/01/2021
Number	0888827878	**AM Weather**	Sunny
Superintendent	Nicholas McCarthy	**PM Weather**	Sunny
Onsite Time	07:00	**Temperature**	max: 50°F min: 30°F

Summary of Work: repaired existing damaged conduit on exterior of vault. Constructed an apparatus that the conduits will attach to make sure they all come through the ground straight up into the VFD.

Site Visitors: Wayne - PES

Changed Conditions/Delays/Conflicts Encountered

SAFETY	SHSO: Nicholas McCarthy
Was a Job Safety Meeting Held This Date?	Yes
Was an EnSafe SWAP Completed?	Yes
Was work performed involving Confined Space Entry, Excavations, Lock Out Tag Out, chemical exposures, or heights? (See SWAP for details)	Yes
Are there any lost-time accidents this date?	No

Actions & Inspection:

CONTRACTORS ONSITE

Company	Personnel	Onsite	Offsite	Duration (hrs)
Hinck	2	07:00	15:00	8

EQUIPMENT ONSITE

Equipment	Safety Check	Used Hrs	Idle Hrs	Repair Hrs
Ford E super duty box truck	Hinck	8	0	0

EQUIPMENT/MATERIALS RECEIVED

Description	Lot/ID	Received By	Quantity
NA			

CONTRACTOR PRODUCTION REPORT

LOCKHEED MARTIN – GREAT NECK, NEW YORK SITE

LM Great Neck VFD - 04/01/2021

SAMPLING, TESTING & INSPECTIONS	
Description	**Company/Personnel**
NA	

WASTE ACCUMULATED, STOCKPILED AND TRANSPORTED OFFSITE
Description
NA

SUMMARY OF WORK ACTIVITIES		
Time	**Title**	**Notes**
07:00	On site at OU1	Hinck's Bob Herrmann (BH) and Gabe Costa (GC) arrive at OU1 with EnSafe's Nick McCarthy (NPM). NPM conducts safety meeting. All parties convoy over to OU2.
08:11	OU2	Hinck and EnSafe arrive at RW-100. Hinck will start the day by repairing the existing PVC conduit that had been taped together where the PVC met the galvanized pipe.
08:15	PES	BH gets approval from Wayne to go ahead with the repair. GC disconnects the wire that go through damage pipe and pulls them back to the point of the repair. He puts on a new coupling and reglues the pipe. GC then pulls the wires back through into the control panel and connects them. Hinck is ready for the system to start back up.
10:16	Apparatus construction	Hinck begins to construct an apparatus that will make sure each conduit is at the same distance off the vault wall. It will also make sure each pipe will be coming up straight into the VFD.
11:17	Apparatus continued	The construction of the apparatus continues.
12:20	Apparatus continued	Construction and assembly of the apparatus continues. Hinck has mounted 3 of 8 conduits to it so far. They are just under halfway done.
13:14	Apparatus continued	Hinck has installed 6 of 8 pipes to the apparatus. 2 pipes remain. Hinck is also installing the mechanisms to make them watertight within the bore hole.
13:20	MBG on site	MBG is on site. He, NPM and Hinck discuss the scheduling for tomorrow. BH explains he will need tomorrow morning to finish the work. MBG says he will speak with Rob McCarthy (EnSafe) and EnviroTrac.

14:05	Apparatus continued	Hinck makes progress on pipe apparatus. They now have all 8 pipes from vault secured to it. They are now working on the piping that is going between the VFD's panels.
14:25		BH states that Hinck will work late today in order for EnviroTrac to come on site tomorrow to dump the filler material first thing in the AM.
14:47	Apparatus complete	Hinck has completed the structure that has the conduits secured to it for the VFD. The hammer drill they have to drive the ground in isn't working. Hinck will have to come back at some point tomorrow to drive the ground rod in.

PHOTO - Conduit pre repair.	PHOTO - Conduit post repair.
	
Conduit on the exterior of RW-100 prior to repair.	Conduit post repair at RW-100

PHOTO - Apparatus	PHOTO - Site secured
	
Apparatus that Hinck is building to make sure the VFD conduits will be straight.	

PHOTO - Apparatus completed	PHOTO - Link seals
	
Conduit mounted to the VFD's apparatus.	Link seals installed for watertight purposes

CONTRACTOR PRODUCTION REPORT

LOCKHEED MARTIN – GREAT NECK, NEW YORK SITE

LM Great Neck VFD - 04/01/2021

PHOTO - Apparatus



Today’s work.

END REPORT

LM Great Neck VFD - 04/01/2021

CONTRACTOR PRODUCTION REPORT

LOCKHEED MARTIN – GREAT NECK, NEW YORK SITE

LM Great Neck VFD OU2/OU1 - 04/02/2021

PROJECT			
Project Name	LM Great Neck VFD OU2/OU1	**Date**	04/02/2021
Number	0888827878	**AM Weather**	Sunny
Superintendent	Nicholas McCarthy	**PM Weather**	Cloudy
Onsite Time	06:57	**Temperature**	max: 45°F min: 30°F

Summary of Work: Ground rod completed at RW-100 (OU2). Demolition continued at EW-1(OU1).

Site Visitors: EnviroTrac (RW-100)

Tom Whitaker - AMEC (EW-1)

Changed Conditions/Delays/Conflicts Encountered

SAFETY	SHSO: Nicholas McCarthy
Was a Job Safety Meeting Held This Date?	Yes
Was an EnSafe SWAP Completed?	Yes
Was work performed involving Confined Space Entry, Excavations, Lock Out Tag Out, chemical exposures, or heights? (See SWAP for details)	Yes
Are there any lost-time accidents this date?	No

Actions & Inspection:

CONTRACTORS ONSITE

Company	Personnel	Onsite	Offsite	Duration (hrs)
Hinck	2	07:00	15:00	8

EQUIPMENT ONSITE

Equipment	Safety Check	Used Hrs	Idle Hrs	Repair Hrs
Ford E super duty box truck	Hinck	8	0	0

EQUIPMENT/MATERIALS RECEIVED

Description	Lot/ID	Received By	Quantity
NA			

CONTRACTOR PRODUCTION REPORT

LOCKHEED MARTIN – GREAT NECK, NEW YORK SITE

LM Great Neck VFD OU2/OU1 - 04/02/2021

SAMPLING, TESTING & INSPECTIONS	
Description	**Company/Personnel**
NA	

WASTE ACCUMULATED, STOCKPILED AND TRANSPORTED OFFSITE
Description
EW -1 demolition waste

SUMMARY OF WORK ACTIVITIES		
Time	**Title**	**Notes**
07:00	OU1	Hinck's Gabe Costa (GC) and Bob Herrmann (BH) as well as EnSafe's Nick McCarthy (NPM) arrive at OU1. NPM conducts safety meeting. Both parties convoy to EW-1.
07:14	EW-1	NPM opens vault to let ventilate. Hinck begins to take tools out of the van. NPM bump checks the gas meter. Readings come back normal. Refer to confined space form to see readings. NPM puts gas monitoring hose into vault.
07:31	RW-100	BH informs NPM that he is going to bring GC over to RW-100 to drive the ground rod in before EnviroTrac begins their work.
07:44	RW-100	Hinck begins working on driving the ground rod in the VFD work area.
08:18	Ground rod complete	The ground rod has been driven into the ground. Refer to photos to see the work complete. Both parties convoy back to EW-1.
08:38	EW-1	Hinck begins to remove some waste that was generated a few days prior. They load it into Hinck's pickup truck. GC then continues demoing conduit in EW-1.
09:25	AMEC on site	AMEC is on site to oversee some work being performed. Demolition continues as GC works in the vault.
11:25	Eagle panel	Hinck continues demo of conduits that are being fed off the sub panel in EW-1. They also unload Eagle's new control panel and bring it down into the vault. The waste generated is getting loaded directly into Hinck's truck and will be transported to OU1 to be off loaded today.
12:59	Plan for Monday	BH informs NPM that he will be dumping the 2nd truck load of waste over at OU1. He will then be heading out afterwards. BH also informs NPM that he spoke with Eagle and they are ready

		for system shutdown on Monday to service EW-1. GC and Tom Whitaker are still on site.
13:29	AMEC offsite	BH offsite to go look at other job. Tom Whitaker is offsite.
14:15	EW-1	GC continues demo for the remainder of the day.
14:46	Hinck and EnSafe offsite	All parties off site. EW-1 is locked and secured.

PHOTO - Ground rod completed.	PHOTO - Ground rod alternate angle.
	
Completion of the ground rod.	Ground rod alternate angle.

PHOTO - Temp fiber box



Temp fiber box as well as demolished piping.

PHOTO - Demolition



Demolition to conduit and unistrut.

PHOTO - Fiber box



Fiber box alternate angle.

PHOTO - Ceiling circuits



Demolition of light fixture and conduit.

END REPORT

LM Great Neck VFD OU2/OU1 - 04/02/2021

CONTRACTOR PRODUCTION REPORT

LOCKHEED MARTIN – GREAT NECK, NEW YORK SITE

LM Great Neck VFD OU1 - 04/05/2021

PROJECT			
Project Name	LM Great Neck VFD OU1	**Date**	04/05/2021
Number	0888827878	**AM Weather**	Sunny
Superintendent	Nicholas McCarthy	**PM Weather**	Sunny
Onsite Time	07:00	**Temperature**	max: 50°F min: 30°F

Summary of Work: Demolition in EW-1 continued. Eagles control panel mounted. Some PVC piping installed.

Site Visitors: Paul Lanzillotta - Eagle Control
Craig Moore - CDM Smith
Dave - PES
Wayne - PES

Changed Conditions/Delays/Conflicts Encountered

SAFETY	SHSO: Nicholas McCarthy
Was a Job Safety Meeting Held This Date?	Yes
Was an EnSafe SWAP Completed?	Yes
Was work performed involving Confined Space Entry, Excavations, Lock Out Tag Out, chemical exposures, or heights? (See SWAP for details)	Yes
Are there any lost-time accidents this date?	No

Actions & Inspection:

CONTRACTORS ONSITE

Company	Personnel	Onsite	Offsite	Duration (hrs)
Hinck	2	07:00	15:00	8

EQUIPMENT ONSITE

Equipment	Safety Check	Used Hrs	Idle Hrs	Repair Hrs
Ford E super duty box truck	Hinck	2	0	0

EQUIPMENT/MATERIALS RECEIVED

Description	Lot/ID	Received By	Quantity
NA			

CONTRACTOR PRODUCTION REPORT

LOCKHEED MARTIN – GREAT NECK, NEW YORK SITE

LM Great Neck VFD OU1 - 04/05/2021

SAMPLING, TESTING & INSPECTIONS	
Description	**Company/Personnel**
NA	

WASTE ACCUMULATED, STOCKPILED AND TRANSPORTED OFFSITE
Description
Demolition wastes: conduit

SUMMARY OF WORK ACTIVITIES		
Time	**Title**	**Notes**
07:00	OU1	Hinck's Bob Herrmann (BH) and Gabe Costa (GC) are on site at OU1. EnSafe Nick McCarthy (NPM) is also on site. NPM performs safety meeting. Both parties head over to EW-1.
07:23	EW-1	Hinck and EnSafe on site at EW-1. NPM calibrates the 4 gas meter. The readings from both calibration gases pass. NPM opens EW-1 to let ventilate. He places the gas monitoring tube into the vault. The readings come back normal. Refer to confined space permit form for details. Hinck begins to think about where they will pull power from to feed the vault temporarily when it gets locked out.
08:37	Eagle on site	Paul with Eagle is on site. He speaks with BH. They will go down into vault to make sure the components that Hinck thinks are there, are in fact there. NPM gives Paul a safety meeting. Hinck and Eagle head down into the vault.
09:48	Wayne on site	Wayne with PES is on site at EW-1. He and BH are discussing where Hinck can pull power from to temporarily feed EW-1 when it gets locked out. After discussion, Hinck will pull power from RW-3 and sleeve an extension cord in PVC over to EW-1. The lock on the vault is still able to work. PES is okay with the idea. EnSafe doesn't see an issue. See photo for reference.
09:51	PES and Eagle offsite	Wayne and Paul are offsite for the time being. Paul will be heading down to OU1 to check communication between OU1 and EW-1 when the fiber gets switched to temp box.
10:55	BH off site	BH heads to OU1 to speak with Eagle to check communication with EW-1.
11:04	BH back at EW-1	BH informs NPM, there is communication established between EW-1 and OU1. Hinck will be begin demoing the control panel in EW-1. EW-1's power and well pump are locked out and tagged. Demolition begins.

11:31	PES	Dave with PES is on site to see what the progress looks like at EW-100. He commented on adding some sort of visibility marker to the PVC piping enclosing the extension cord. Hinck agrees. Dave heads offsite to RW-100. Craig Moore with CDM Smith also stopped by to check on progress. He also heads off site to RW-100.
12:43	Demolition	Demolition continues. Hinck is removing conduit and putting it directly into the back of Hinck's truck. It will be transported to OU1 storage area at the end of the day.
13:59	Control panel	Demolition is 95% complete. The new Eagle control panel has been mounted. New conduits have also been installed into panel.
14:15	Property manager	Property manager (believed to be Peter McClean) of the buildings on site stopped by at EW-1. He asked if NPM was with Hinck. NPM replies he's overseeing an electrical project and is with EnSafe. Property manager asks NPM to take a walk to discuss an issue of a leak in the irrigation system. NPM agrees and they walk toward RW-1RS. Property manager thought it was related to manhole work that had been done recently, NPM informs him that Hinck has been working within the concrete vaults only. Property manager goes and speaks with another contractor on site. NPM walks back to RW-1RS. Property manager comes back to his car and heads offsite.
14:25	Demobilization	Hinck begins to clean up tools and tidy up the job site.
15:00	Offsite	Hinck and EnSafe are off site. Site is locked and secured.

PHOTO - Conduit

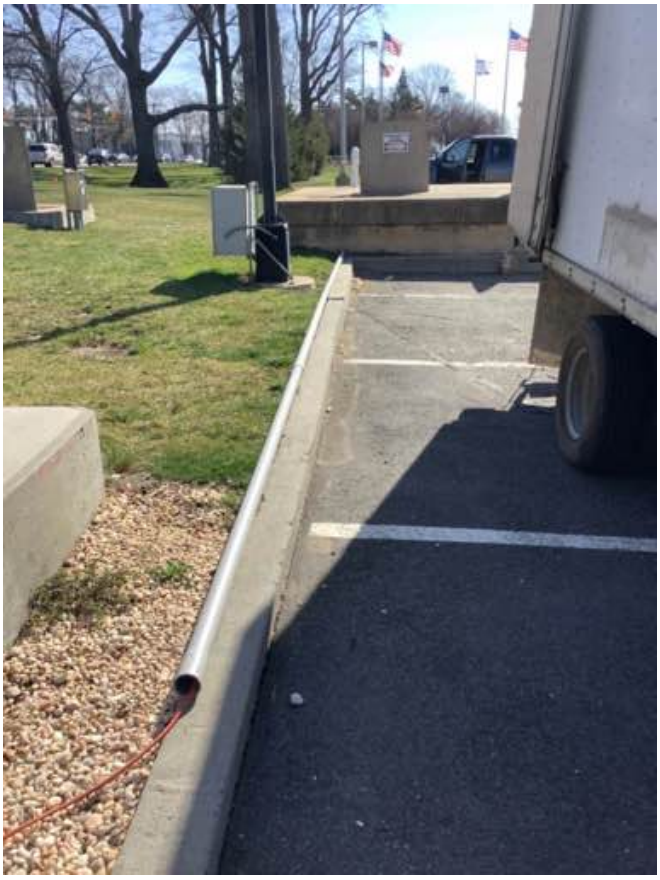

PVC conduit with extension cord sleeved through it.

PHOTO - Fiber Box



Fiber box with connections made inside. Also new PVC conduit installed.

PHOTO - New panel



New Eagle control panel without internals.

PHOTO - Site secured.



END REPORT

LM Great Neck VFD OU1 - 04/05/2021

CONTRACTOR PRODUCTION REPORT

LOCKHEED MARTIN – GREAT NECK, NEW YORK SITE

Lockheed Great Neck VFD - 04/05/2021

PROJECT			
Project Name	Lockheed Great Neck VFD	**Date**	04/05/2021
Number	0888827878	**AM Weather**	Clear, light breeze
Superintendent	Rob McCarthy	**PM Weather**	clear, warm
Onsite Time	06:45	**Temperature**	max: 60°F min: 48°F
Summary of Work: Prepare form and rebar for concrete; compaction test of fill material			

Site Visitors:
Craig Moore - CDM Smith
Dave Kahn - PES

Changed Conditions/Delays/Conflicts Encountered

SAFETY	SHSO: Rob McCarthy
Was a Job Safety Meeting Held This Date?	Yes
Was an EnSafe SWAP Completed?	Yes
Was work performed involving Confined Space Entry, Excavations, Lock Out Tag Out, chemical exposures, or heights? (See SWAP for details)	No
Are there any lost-time accidents this date?	No
Actions & Inspection:	

CONTRACTORS ONSITE

Company	Personnel	Onsite	Offsite	Duration (hrs)
EnviroTrac	3	07:00	13:30	7

EQUIPMENT ONSITE

Equipment	Safety Check	Used Hrs	Idle Hrs	Repair Hrs
Bobcat Skid Steer	EnviroTrac	2	0	0
Ford F250, Toyota Tacoma	EnviroTrac	8	0	0

EQUIPMENT/MATERIALS RECEIVED

Description	Lot/ID	Received By	Quantity
Wood for forms			

CONTRACTOR PRODUCTION REPORT

LOCKHEED MARTIN – GREAT NECK, NEW YORK SITE

Lockheed Great Neck VFD - 04/05/2021

SAMPLING, TESTING & INSPECTIONS	
Description	**Company/Personnel**
Soil compaction test – Result of 98.7	Soil Mechanics Drilling Corp. Andrew Katsalas

WASTE ACCUMULATED, STOCKPILED AND TRANSPORTED OFFSITE
Description
NA

SUMMARY OF WORK ACTIVITIES		
Time	**Title**	**Notes**
07:20	EnviroTrac personnel on-site, conduct H&S meeting, complete SWAP	Foreman - Mike Alliegro (MA) Ken Davies (KD) Steve Smith (SS)
07:45	Soil Compaction Test	Andrew Katasalas w/ Soil Mechanics on-site, begin preparation for compaction test of backfill material Rob photo of prepared area
08:00	Site Prep	Soil Mechanics completing compaction test EnviroTrac personnel setting up wood to be cut for forms, staging rebar, materials, and equipment
11:00		Wood forms and rebar mostly in place, final rebar and ties to be completed
12:00	Site Prep	Picking up / cleaning site area, moving materials and equipment to open entrance area for concrete to be delivered Craig Moore and Dave Kahn site visit ~11:45; Dave depart 12:00; Craig reviewed site activities, materials Rob M take photo of completed forms and rebar
13:45	Demobilization	EnviroTrac secures gate and departing site

PHOTO – Compaction test location



Compaction test

PHOTO – Forms and Rebar installed



Rebar and forms placed, ready for concrete

PHOTO -

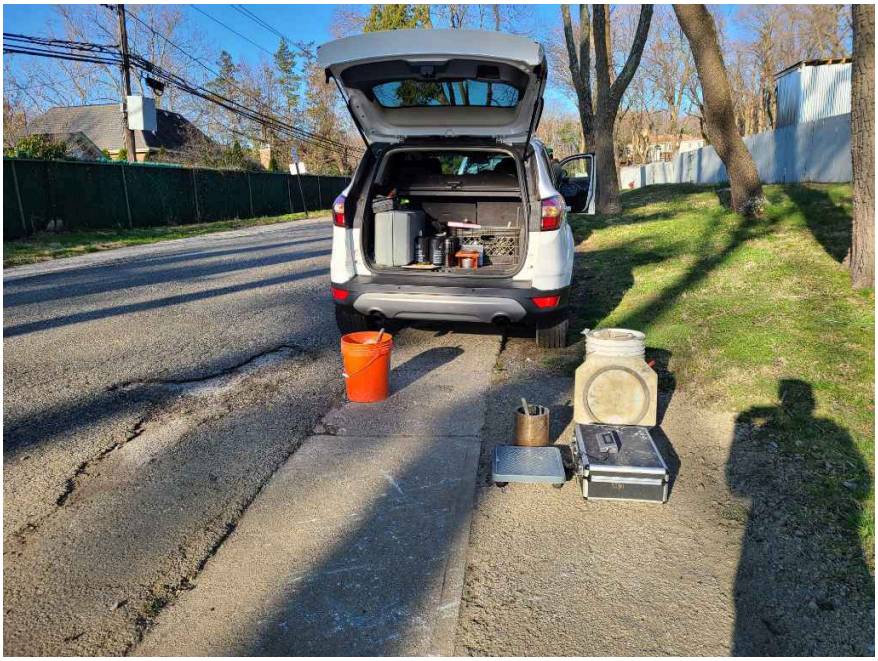

Compaction test equipment.

END REPORT

Lockheed Great Neck VFD - 04/05/2021

CONTRACTOR PRODUCTION REPORT

LOCKHEED MARTIN – GREAT NECK, NEW YORK SITE

LM Great Neck VFD OU2/OU1 - 04/06/2021

PROJECT			
Project Name	LM Great Neck VFD - OU2/OU1	**Date**	04/06/2021
Number	0888827878	**AM Weather**	Sunny
Superintendent	Nicholas McCarthy	**PM Weather**	Cloudy
Onsite Time	07:00	**Temperature**	max: 45°F min: 30°F

Summary of Work: Hinck installed conduit and pulled some wire into piping. EnviroTrac made the saw cut in asphalt at OU1 as well as cleaned up lawn damage near RW-1RD.

Site Visitors: Tom Whittaker - AMEC

Changed Conditions/Delays/Conflicts Encountered

SAFETY	SHSO: Nicholas McCarthy
Was a Job Safety Meeting Held This Date?	Yes
Was an EnSafe SWAP Completed?	Yes
Was work performed involving Confined Space Entry, Excavations, Lock Out Tag Out, chemical exposures, or heights? (See SWAP for details)	Yes
Are there any lost-time accidents this date?	No

Actions & Inspection:

CONTRACTORS ONSITE

Company	Personnel	Onsite	Offsite	Duration (hrs)
Hinck	2	07:00	15:00	8
EnviroTrac	3	07:00	12:00	5

EQUIPMENT ONSITE

Equipment	Safety Check	Used Hrs	Idle Hrs	Repair Hrs
Ford E super duty box truck	Hinck	8	0	0

EQUIPMENT/MATERIALS RECEIVED

Description	Lot/ID	Received By	Quantity
NA			

CONTRACTOR PRODUCTION REPORT

LOCKHEED MARTIN – GREAT NECK, NEW YORK SITE

LM Great Neck VFD OU2/OU1 - 04/06/2021

SAMPLING, TESTING & INSPECTIONS	
Description	**Company/Personnel**
NA	

WASTE ACCUMULATED, STOCKPILED AND TRANSPORTED OFFSITE
Description
Asphalt from the saw cut stockpiled at OU1

SUMMARY OF WORK ACTIVITIES		
Time	**Title**	**Notes**
07:00	OU1	Hinck's Bob Herrmann (BH) and Gabe Costa (GC) are on site with EnSafe's Nick McCarthy (NPM) at OU1. EnviroTrac's Ken Davies (KD) and Stephen Smith (SS) are also on site. NPM conducts safety meeting with EnviroTrac. NPM tells Hinck to head to EW-1 and he will meet them there after setting EnviroTrac up.
07:12	Lawn damage	NPM leads EnviroTrac over the RW-1 to show them the lawn damage that will be fixed today. They explain that they will be making the saw cut first and doing the lawn care second. They will get a few bags of topsoil prior. EnviroTrac heads back to OU1. NPM heads her to EW-1 to meet with Hinck.
07:34	EW-1	NPM conducts a safety meeting with Hinck. NPM bump checks the 4 gas meter with both calibration gases. NPM opens the vault door to let ventilate then place the gas monitoring hose into the vault. The readings come back normal. Refer to confined Spence entry sheet for details. NPM gives Hinck clearance t enter vault. NPM heads back to OU1 to meet with EnviroTrac.
07:48	OU1	NPM and EnviroTrac discuss the game plan of the sawcut. They explain they will build a wooden frame to specs. Lay it in the work spine and spray paint the perimeter to give the outline of the pad. They will then sawcut while one worker operates the saw and the other sprays continues water on the blade as dust control. NPM calls Rob McCarthy to see if work should begin without PES on site. Rob tells NPM to whet in set up, but don't start cutting until PES is here.
08:16	PES on site	Wayne with PES arrives at OU1. Saw cutting begins.
08:33	Saw cut complete	EnviroTrac saw cuts the perimeter painted on the ground. They then make a few more cuts so they can pry a piece up to start removal.

09:12	Saw cutting	EnviroTrac has to do extra saw cutting to pry the pieces out of the ground. They didn't expect it to be so thick. It looked around 5-6" thick. NPM heads over to EW-1 to check on Hinck.
09:54	EW-1	Hinck has been chipping at installing PVC piping within the vault. They will be installing PVC and unistrut for the remainder of the day. NPM head back to OU1 to see progress on saw cutting.
10:08	OU1	EnviroTrac has removed all the asphalt. Some spots were 7" thick. They had installed the wood for the form are putting rebar in now.
11:00	OU1 Pad complete	Pad at OU1 is formed and complete its rebar and mesh. Concrete will be poured tomorrow. EnviroTrac will soon head over to RW-1RD to fix the damaged lawn area. NPM heads over to EW-1.
11:16	EW-1	Tom Whitaker is on site with AMEC to oversee some of the project. Hinck continues to install PVC conduit.
11:36	AMEC off site	
12:06	EnviroTrac offsite.	NPM heads over to RW-1RD to check on EnviroTrac. They finished and have head off site. See photos for grass repair.
12:31	NPM speaks with Northwell Landscaper	NPM finds a Northwell landscaper and asks if he could take a walk with him to track down the sprinkler head that may a potential leak. He agrees. Both parties head over to RW-1RD. After walking the route Hinck's truck took, the landscaper said there aren't any sprinklers on that path, but they are more near the curbside. NPM couldn't track down one sprinkler head that was in both of the truck's paths. NPM heads back to EW-1.
13:50	EW-1	Hinck continues installing PVC. They have also started wire through the piping.
14:30	Demobilization	Hinck begins to clean up and organize the work site for tomorrow. Conduit installation will continue.
15:00	Offsite	Hinck and EnSafe are both offsite. The site is locked and secured.

PHOTO - Saw cut



Work site prior to demolition.

PHOTO - Saw cut.	PHOTO - Form
	
Paint line marks out for saw cut.	The form constructed for concrete.

PHOTO - Mesh and rebar



Detailed mesh and rebar photo.

PHOTO - Lawn repair.	PHOTO - Lawn repair.
	

PHOTO - Lawn Repair.	PHOTO - EW-1
	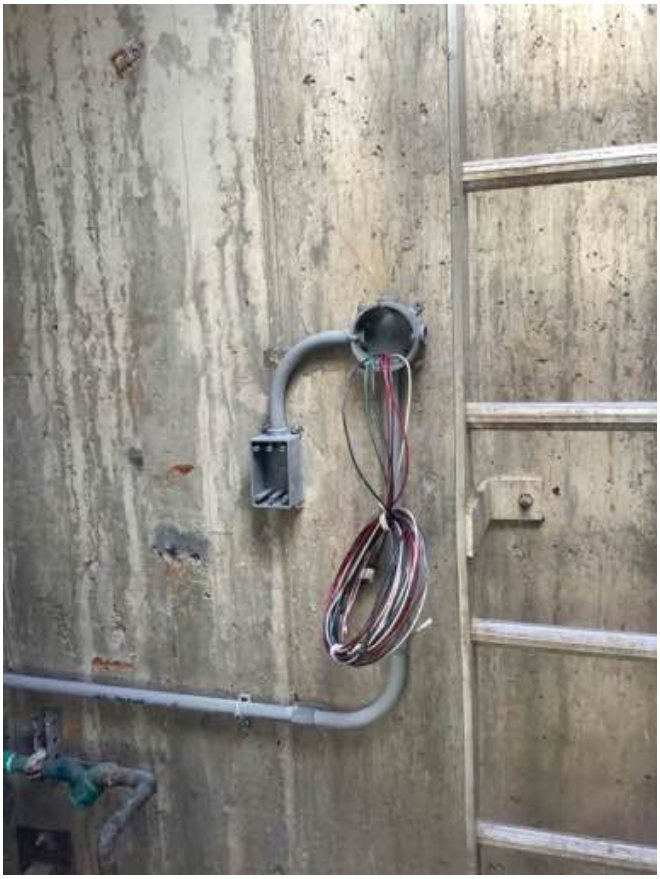
Lawn repair from are closer to Marcus Avenue.	Conduit installed today.

PHOTO - EW-1	PHOTO - EW-1
	
More conduit piping ran today.	PVC installed today.

PHOTO - EW-1	PHOTO - EW-1
	
Eagle’s panel with internals.	Conduit and unistrut install.

END REPORT

LM Great Neck VFD OU2/OU1 - 04/06/2021

CONTRACTOR PRODUCTION REPORT

LOCKHEED MARTIN – GREAT NECK, NEW YORK SITE

LM Great Neck OU1/OU2 - 04/07/2021

PROJECT			
Project Name	LM Great Neck OU1/OU2	**Date**	04/07/2021
Number	0888827878	**AM Weather**	P. Cloudy
Superintendent	Marshall Gibson	**PM Weather**	Sunny
Onsite Time	07:00	**Temperature**	max: 35°F min: 65°F
Summary of Work: Pour concrete for harmonic filter pad at OU1 and pour concrete for RW-100 electrical			
Site Visitors: Craig Moore - CDM Smith			
Changed Conditions/Delays/Conflicts Encountered			

SAFETY	SHSO: Marshall Gibson
Was a Job Safety Meeting Held This Date?	Yes
Was an EnSafe SWAP Completed?	Yes
Was work performed involving Confined Space Entry, Excavations, Lock Out Tag Out, chemical exposures, or heights? (See SWAP for details)	No
Are there any lost-time accidents this date?	No
Actions & Inspection:	

CONTRACTORS ONSITE

Company	Personnel	Onsite	Offsite	Duration (hrs)
EnviroTrac	4	07:00	12:18	5

EQUIPMENT ONSITE

Equipment	Safety Check	Used Hrs	Idle Hrs	Repair Hrs
NA		0	0	0

EQUIPMENT/MATERIALS RECEIVED

Description	Lot/ID	Received By	Quantity
OU1 concrete: Nicolia Redi-Mix, Inc.			Approx. 0.25 yds
RW-100 concrete: Nicolia Redi-Mix concrete			Approx. 5.75 yds

CONTRACTOR PRODUCTION REPORT

LOCKHEED MARTIN – GREAT NECK, NEW YORK SITE

LM Great Neck OU1/OU2 - 04/07/2021

SAMPLING, TESTING & INSPECTIONS	
Description	**Company/Personnel**
NA	

WASTE ACCUMULATED, STOCKPILED AND TRANSPORTED OFFSITE
Description
NA

SUMMARY OF WORK ACTIVITIES		
Time	**Title**	**Notes**
07:00	Mobilization	MBG on-site at OU1. EnviroTrac team on-site Foreman: Mike Alliegro (MA) Crew Chief: Ken Davies (KD) Assistant: Steve Smith (SS) Assistant: Nick Zarcone (NZ) According to KD, concrete delivery schedule has been moved back to around 0900-0930
07:10	Tailgate meeting	MBG conducts H&S meeting - see SWAP MBG collects photos of form work/rebar
07:30	Safety Audit - EW-1R	MBG goes to vault EW-1R and performs a Safety Audit with Nick McCarthy (EnSafe).
09:10	Concrete delivery	MBG returns to OU1 and concrete delivery in progress. According to KD, Nicolia Redi-Mix arrived on-site at OU1 at approx. 0900 to deliver concrete for harmonic filter pad. By the time I arrived, form for concrete pad already filled. According to MA, estimate approx. 0.25 yds delivered to OU1 concrete pad MBG collects photos of finished pour, along with pre-pour photos of form work/re-bar, and send them via text to Jerry DeLucia, North Hampstead Inspector - per his request MBG to RW-100 to unlock gate/provide access for concrete

09:33	Concrete delivery RW-100	Nicolia on-site at RW-100. EnviroTrac on-site at RW-100 Begin delivering concrete into form for pad
09:46	Concrete test	During pour EnviroTrac collects a grab sample of concrete from the chute, while concrete being delivered to fill form
09:55	CDM Smith	Craig Moore with CDM Smith on-site at RW-100. MBG conducts a H&S meeting with Craig
10:15	Concrete delivery	Nicolia finishes delivery, washes out/ offsite. Estimate approx. 5.75 yds delivered for the RW-100 pad. Total concrete today approx. 6 yds
10:20	RW-100 pad	EnviroTrac NZ and SS working ion RW-100 pad EnviroTrac MA and KD return to OU1 to finish that pad/add chamfer
10:20	CDM Smith	CDM Smith offsite to VFD work/EW-1R.
10:35	OU1	MBG to OU1 to see progress. EnviroTrac complete broom trowel and are wrapping up. Both MA and KD to head back to RW-100 to help out there. MBG receives call from RM. Discuss status. Indicate to RM that EnviroTrac to return tomorrow to pull forms and complete restoration. RM asks that grass seed be spread at RW-100, once grading complete. RM also asks that soil sample for waste disposal be collected from DW15 drums.
11:10	RW-100	MBG returns to RW-100 and lets EnviroTrac know about grass seed. EnviroTrac working on concrete pad - letting it set-up a little longer before final trowel.
12:09	RW-100	EnviroTrac completes RW-100 concrete pad. Picking up materials, etc.
12:20	Demobilization	EnviroTrac offsite. MBG secures gate and return to EW-1R to check in with Nick.

13:10	Equipment	MBG offsite to Pine to get Non-Haz Waste labels for drums at DW15 (ran out of labels on 4/2 and have a few still requiring labeling) After Pine, MBG heads to Ace hardware to get wrench so that soil drums from DW15 can be opened to allow sampling.
14:15	Drum labeling	MBG back on-site and goes to DW15 to label any drums. At DW15 label 4 water drums and 4 soil drums. Complete a full inspection and all drums (water and soil) are all labeled
15:15	Demobilization	MBG offsite for day. Will complete drum soil sampling tomorrow/cover temp. water drum storage area.

CONTRACTOR PRODUCTION REPORT

LOCKHEED MARTIN – GREAT NECK, NEW YORK SITE

LM Great Neck OU1/OU2 - 04/07/2021

PHOTO - RW-100	PHOTO - RW-100
	
Concrete delivery at RW-100	Concrete

PHOTO - RW-100	PHOTO - RW-100
	
Concrete pad	Concrete pad

PHOTO - OU1 pad	PHOTO - OU1 Pad
	
Finished pad	Finished pad

CONTRACTOR PRODUCTION REPORT

LOCKHEED MARTIN – GREAT NECK, NEW YORK SITE

LM Great Neck OU1/OU2 - 04/07/2021

PHOTO - RW-100	PHOTO - End of day
	
Pad complete	Site secure

END REPORT

LM Great Neck OU1/OU2 - 04/07/2021

CONTRACTOR PRODUCTION REPORT

LOCKHEED MARTIN – GREAT NECK, NEW YORK SITE

LM Great Neck VFD OU2/OU1 - 04/07/2021

PROJECT			
Project Name	LM Great Neck VFD OU2/OU1	**Date**	04/07/2021
Number	0888827878	**AM Weather**	Sunny
Superintendent	Nicholas McCarthy	**PM Weather**	Cloudy
Onsite Time	07:00	**Temperature**	max: 65°F min: 30°F

Summary of Work: Conduit install with wires pulled through.

Site Visitors: Craig Moore - CDM Smith
Mike Hagan - Eagle Control
Paul Lanzilotta - Eagle Control

Changed Conditions/Delays/Conflicts Encountered

SAFETY	SHSO: Nicholas McCarthy
Was a Job Safety Meeting Held This Date?	Yes
Was an EnSafe SWAP Completed?	Yes
Was work performed involving Confined Space Entry, Excavations, Lock Out Tag Out, chemical exposures, or heights? (See SWAP for details)	Yes
Are there any lost-time accidents this date?	No

Actions & Inspection:

CONTRACTORS ONSITE

Company	Personnel	Onsite	Offsite	Duration (hrs)
Hinck	2	07:00	15:00	8

EQUIPMENT ONSITE

Equipment	Safety Check	Used Hrs	Idle Hrs	Repair Hrs
Ford E super duty box truck	Hinck	8	0	0

EQUIPMENT/MATERIALS RECEIVED

Description	Lot/ID	Received By	Quantity
NA			

CONTRACTOR PRODUCTION REPORT

LOCKHEED MARTIN – GREAT NECK, NEW YORK SITE

LM Great Neck VFD OU2/OU1 - 04/07/2021

SAMPLING, TESTING & INSPECTIONS	
Description	**Company/Personnel**
EW-1R Startup and Testing	Project Team

WASTE ACCUMULATED, STOCKPILED AND TRANSPORTED OFFSITE
Description
NA

SUMMARY OF WORK ACTIVITIES		
Time	**Title**	**Notes**
07:00	OU1	Hinck's Bob Herrmann (BH) and Gabe Costa (GC) on site at OU1 along with EnSafe's Nick McCarthy (NPM). NPM conducts a safety meeting. Both parties convoy to EW-1.
07:19	EW-1	Hinck will be finishing the remaining prep work for the start up which will occur today. NPM bump checks the 4 gas meter with both calibration gases. The bump checks pass. NPM puts the gas monitors hose into the vault. The readings come back normal. Refer to confined space paperwork to see details.
08:30	EW-1	Hinck continues preparation.
09:15	EW-1	Hinck is ready for system shutdown to transfer over fiber optics to Eagle's panel.
10:00	Eagle on site	Paul Lanzilotta with Eagle is on site. He heads over to OU1 to prepare for the system shutdown.
10:27	System shutdown	Paul calls BH to inform him the system is shutdown. Paul also informs BH that he will notify when ready to do the fiber swap over at OU1.
10:48	Eagle on site	Paul with Eagle is on site at EW-1. Eagle and Hinck head down into EW-1 to swap over the fiber connections.
11:53	Eagle heads to OU1	Paul heads over to OU1 to see if there is communication between OU1 and EW-1.
13:17	Eagle on site	Paul remains at OU1. Mike Hagan on site at EW-1. Eagle has run into a slight delay where the configuration isn't up to date on the module in EW-1. This means it isn't establishing communication between EW-1 and OU1. Mike Hagan brought the tools to fix the issue. He uploads the configuration and heads off site.
13:52	PES calls BH	Wayne with PES calls BH to inform him that we will be starting up momentarily at EW-1. PES will run EW-1 temporarily and shut

		off when everyone goes offsite. PES will perform their tests tomorrow morning.
13:59	EW-1 up and running	EW-1 is running. According to Eagle and PES all components check out fine.
14:30	Demobilization	Hinck starts to pick up tools and tidy up the job site.
15:00	Offsite	Hinck and EnSafe both offsite. Refer to photos for today's progress of PVC installation. Site is locked and secured.

PHOTO – Eagle's panel	PHOTO - Demo
	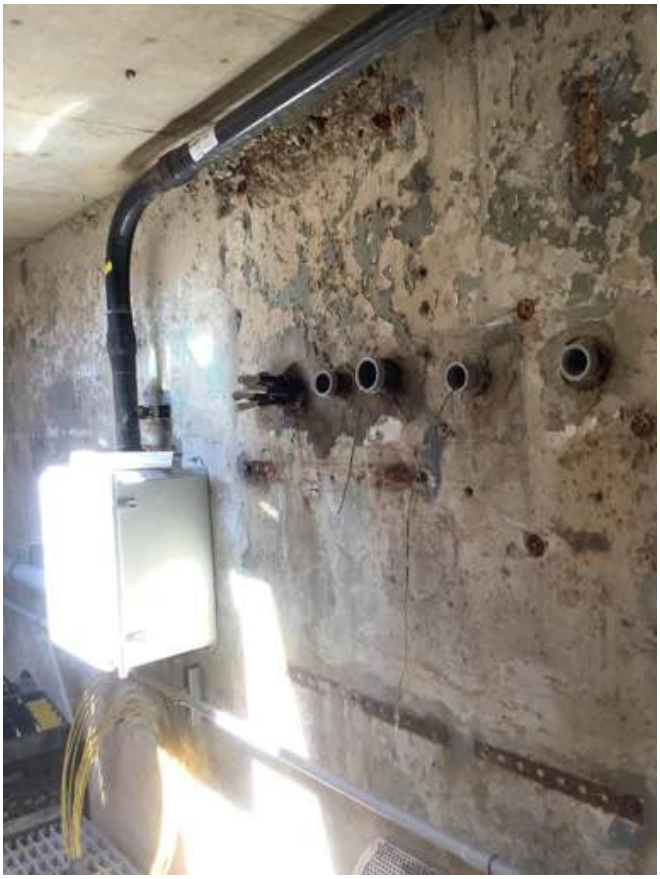
Eagle's panel with the indicating lights working properly.	Demolition of piping coming into vault.

PHOTO - PVC conduit	PHOTO - PVC
	
Part of the lighting circuit that will be complete tomorrow.	More conduit install. These pipes head over to EW-1R.

END REPORT

LM Great Neck VFD OU2/OU1 - 04/07/2021

CONTRACTOR PRODUCTION REPORT

LOCKHEED MARTIN – GREAT NECK, NEW YORK SITE

LM Great Neck OU1/OU2 - 04/08/2021

PROJECT			
Project Name	LM Great Neck OU1/OU2	**Date**	04/08/2021
Number	0888827878	**AM Weather**	Sunny
Superintendent	Marshall Gibson	**PM Weather**	Sunny
Onsite Time	07:00	**Temperature**	max: 65°F min: 40°F
Summary of Work: Remove forms from around concrete pads and restoration			
Site Visitors:			

Changed Conditions/Delays/Conflicts Encountered

SAFETY	SHSO: Marshall Gibson
Was a Job Safety Meeting Held This Date?	Yes
Was an EnSafe SWAP Completed?	Yes
Was work performed involving Confined Space Entry, Excavations, Lock Out Tag Out, chemical exposures, or heights? (See SWAP for details)	No
Are there any lost-time accidents this date?	No
Actions & Inspection:	

CONTRACTORS ONSITE

Company	Personnel	Onsite	Offsite	Duration (hrs)
EnviroTrac	2	07:00	11:30	5

EQUIPMENT ONSITE

Equipment	Safety Check	Used Hrs	Idle Hrs	Repair Hrs
Bobcat T595 skidsteer	EnviroTrac	4	0	0

EQUIPMENT/MATERIALS RECEIVED

Description	Lot/ID	Received By	Quantity
NA			

CONTRACTOR PRODUCTION REPORT

LOCKHEED MARTIN – GREAT NECK, NEW YORK SITE

LM Great Neck OU1/OU2 - 04/08/2021

SAMPLING, TESTING & INSPECTIONS	
Description	**Company/Personnel**
NA	

WASTE ACCUMULATED, STOCKPILED AND TRANSPORTED OFFSITE
Description
NA

SUMMARY OF WORK ACTIVITIES		
Time	**Title**	**Notes**
07:00	Mobilization	MBG site at OU1 EnviroTrac Foreman: Ken Davies Assistant: Steve Smith Goal today is to pull forms from around the OU1 and OU2 concrete pads poured yesterday and restore (cold asphalt patch OU1 and backfill/re-grade OU2). Conduct H&S meeting Waiting on PES to gain access to fenced in area
07:45	OU1 restoration	PES on-site and gain access to gated area. EnviroTrac begins disassembly concrete forms/asphalt cold patch. MBG offsite to collect waste sample from DW15
10:43	RW-100 restoration	MBG at RW-100 EnviroTrac has completed backfilling/sealing concrete pad. Additionally, have completed grading. All soil generated/stockpiled during excavation for concrete pad re-used onsite. EnviroTrac has removed silt fencing and has top-dressed with grass seed.
11:30	Demobilization	EnviroTrac offsite. All EnviroTrac equipment offsite.

		Bob Hermonn with Hinck on-site to make materials list. Bob offsite 10min later. MBG collects 360 photos
11:55	Demobilization	MBG secures site MBG offsite to DW15

PHOTO - OU1 Concrete Pad	PHOTO - OU1 Concrete Pad
	
Finished concrete pad at OU1	Finished concrete pad

CONTRACTOR PRODUCTION REPORT

LOCKHEED MARTIN – GREAT NECK, NEW YORK SITE

LM Great Neck OU1/OU2 - 04/08/2021

PHOTO - RW-100	PHOTO - RW-100
	
Pad complete	Pad complete

PHOTO - RW-100	PHOTO - RW-100
	
Grading	Grading

PHOTO - RW-100



END REPORT

LM Great Neck OU1/OU2 - 04/08/2021

CONTRACTOR PRODUCTION REPORT

LOCKHEED MARTIN – GREAT NECK, NEW YORK SITE

LM Great Neck VFD OU2/OU1 - 04/08/2021

PROJECT			
Project Name	LM Great Neck VFD OU2/OU1	**Date**	04/08/2021
Number	0888827878	**AM Weather**	Sunny
Superintendent	Nicholas McCarthy	**PM Weather**	Cloudy
Onsite Time	07:01	**Temperature**	max: 65°F min: 30°F

Summary of Work: PVC conduit installation. EW-1 supervisory tests.

Site Visitors: Tom Whitaker - AMEC
Dave Kahn - PES

Changed Conditions/Delays/Conflicts Encountered

SAFETY	SHSO: Nicholas McCarthy
Was a Job Safety Meeting Held This Date?	Yes
Was an EnSafe SWAP Completed?	Yes
Was work performed involving Confined Space Entry, Excavations, Lock Out Tag Out, chemical exposures, or heights? (See SWAP for details)	Yes
Are there any lost-time accidents this date?	No

Actions & Inspection:

CONTRACTORS ONSITE

Company	Personnel	Onsite	Offsite	Duration (hrs)
Hinck	2	07:00	15:00	8

EQUIPMENT ONSITE

Equipment	Safety Check	Used Hrs	Idle Hrs	Repair Hrs
Ford E Super Duty box truck	Hinck	8	0	0

EQUIPMENT/MATERIALS RECEIVED

Description	Lot/ID	Received By	Quantity
NA			

CONTRACTOR PRODUCTION REPORT

LOCKHEED MARTIN – GREAT NECK, NEW YORK SITE

LM Great Neck VFD OU2/OU1 - 04/08/2021

SAMPLING, TESTING & INSPECTIONS	
Description	**Company/Personnel**
EW-1R Startup and Testing	Project Team

WASTE ACCUMULATED, STOCKPILED AND TRANSPORTED OFFSITE
Description
NA

SUMMARY OF WORK ACTIVITIES		
Time	**Title**	**Notes**
07:01	OU1	Hinck's Bob Herrmann (BH) and Gabe Costa (GC) on site at OU1 as well as EnSafe's Nick McCarthy (NPM). NPM conducts a safety meeting, both parties convoy to EW-1.
07:23	EW-1	Hinck begins to unload tooling off the truck. NPM bump checks the 4 gas meter with both calibration gases. The tests pass. NPM opens vault to let ventilate then puts the hose of the gas meter inside. The readings come back fine. Refer to confined space sheet for details.
08:08	W-1	Hinck continues to unload tools and material off the truck and take it down into the vault.
09:06	PES	Wayne and Dave are on site at EW-1. They are conducting their tests while the well is on its supervised run period. They test both floats, the emergency stop as well as the switches on the control panel. The also will do a pump tests.
09:35	EW-1	Hinck is organizing their work space. They are passing stuff that they don't need out of the vault to make sure they have everything they need to complete this vault, as well material for the next vault.
10:38	Tom Whitaker on site	Time Whitaker is on site to oversee work that has been done.
11:39	PES	Dave with PES is on site to amperage and voltage readings.
12:00	PES is offsite	PES readings came back fine, all components seem to be operating fine. PES heads offsite.
13:05	Organization	Hinck is beginning to remove tools from vault. They are close to completion. They are gathering material and counting the material they have and making lists of what they need for RW-100.

13:29	EW-1 complete	Work in EW-1 is complete. Hinck, EnSafe and PES will now convoy down to OU2 to check out the work that needs to be done there.
14:18	OU2	All parties arrive at OU2. We all do a walkthrough of the building and we discuss what work will be performed tomorrow. GC will be pulling wires through preexisting piping to get communication wires from the buildings control panel to the box that Hinck will wall mount.
14:42	OU1	Hinck, PES, end EnSafe all off site. Hinck and EnSafe head to OU1 to drop off the waste generated from today. Just a few old pipes.
15:00	Offsite	Hinck and EnSafe both offsite.

PHOTO - EW-1	PHOTO - EW-1
	
Conduit and receptacles installed.	Lighting circuit complete along with PVC in background.

PHOTO - EW-1	PHOTO - EW-1
	
Completed conduit work.	Continued completed conduit work.

END REPORT

LM Great Neck VFD OU2/OU1 - 04/08/2021

CONTRACTOR PRODUCTION REPORT

LOCKHEED MARTIN – GREAT NECK, NEW YORK SITE

LM Great Neck VFD OU2 - 04/09/2021

PROJECT			
Project Name	LM Great Neck VFD OU2	**Date**	04/09/2021
Number	0888827878	**AM Weather**	Cloudy
Superintendent	Nicholas McCarthy	**PM Weather**	Cloudy
Onsite Time	07:01	**Temperature**	max: 55°F min: 30°F
Summary of Work: Wire run researched, and pulled at OU2 building. EW-1 cleaned up. Box truck organized.			
Site Visitors: Craig Moore with CDM Smith			
Changed Conditions/Delays/Conflicts Encountered			

SAFETY	SHSO: Nicholas McCarthy
Was a Job Safety Meeting Held This Date?	Yes
Was an EnSafe SWAP Completed?	Yes
Was work performed involving Confined Space Entry, Excavations, Lock Out Tag Out, chemical exposures, or heights? (See SWAP for details)	Yes
Are there any lost-time accidents this date?	No
Actions & Inspection:	

CONTRACTORS ONSITE

Company	Personnel	Onsite	Offsite	Duration (hrs)
Hinck	1	07:00	14:36	8

EQUIPMENT ONSITE

Equipment	Safety Check	Used Hrs	Idle Hrs	Repair Hrs
Ford E super duty box truck	Hinck	8	0	0

EQUIPMENT/MATERIALS RECEIVED

Description	Lot/ID	Received By	Quantity
NA			

CONTRACTOR PRODUCTION REPORT

LOCKHEED MARTIN – GREAT NECK, NEW YORK SITE

LM Great Neck VFD OU2 - 04/09/2021

SAMPLING, TESTING & INSPECTIONS	
Description	**Company/Personnel**
NA	

WASTE ACCUMULATED, STOCKPILED AND TRANSPORTED OFFSITE
Description
NA

SUMMARY OF WORK ACTIVITIES		
Time	**Title**	**Notes**
07:01	OU1	Hinck's Gabe Costa (GC) on site with EnSafe's Nick McCarthy (NPM). NPM performs safety meeting. Both parties wait for PES' arrival to get a key to get into OU2.
07:35	PES on site	Dave with PES is on site at OU1. He does what he has to do then leads us over to SSDS building so Hinck can grab a bigger ladder.
08:38	OU2	Dave let's NPM and GC into OU2 and heads offsite. GC brings ladder and wire into building. GC then examines the pipes and opens up a junction box to determine which pipe will work to pull wires through.
10:41	OU2	GC finds his pipe and sends a fiberglass snake from one end to the other. The tapes his wires on one end and pulls them through.
11:30	Demobilized	Hinck begins to clean up tools and begins to organize the truck. Craig Moore with CDM Smith is on site to take some notes. He heads offsite about 15 minutes of being here.
12:15	OU2	GC is finished organizing the truck at the moment, his tools and material are clean up from the worksite. He makes a small list about future material and planning. Hinck and EnSafe head to EW-1.
12:36	EW-1	Hinck picks up comes and barriers that were left on site as well as some miscellaneous scraps around the vault. GC loads the cones into the truck and heads to OU1.
13:37	OU1	Hinck and EnSafe organize the scrap pile that has been accumulating at OU1. GC begins to organize the truck after the scrap pile is organized.
14:36	Offsite	Hinck and EnSafe are offsite. Work will resume Monday with Hinck installing the light bulbs in the fixtures of all vaults as well as final cleaning them.

CONTRACTOR PRODUCTION REPORT

LOCKHEED MARTIN – GREAT NECK, NEW YORK SITE

LM Great Neck VFD OU2 - 04/09/2021

PHOTO - OU2	PHOTO - OU2
	
Junction box and pipe run that will be looked into.	Control panel in OU2 that Hinck is jumping off to feed the panel they will be installing.

CONTRACTOR PRODUCTION REPORT

LOCKHEED MARTIN – GREAT NECK, NEW YORK SITE

LM Great Neck VFD OU2 - 04/09/2021

PHOTO - OU2	PHOTO - OU2
	
Piping that Hinck pulled wire through.	Hinck's panel will be installed between the two doors.

END REPORT

LM Great Neck VFD OU2 - 04/09/2021

CONTRACTOR PRODUCTION REPORT

LOCKHEED MARTIN – GREAT NECK, NEW YORK SITE

LM Great Neck VFD OU1/OU2 - 04/12/2021

PROJECT			
Project Name	LM Great Neck VFD OU1/OU2	**Date**	04/12/2021
Number	0888827878	**AM Weather**	Cloudy
Superintendent	Nicholas McCarthy	**PM Weather**	Cloudy
Onsite Time	07:01	**Temperature**	max: 55°F min: 30°F

Summary of Work: Lights installed in vaults. Cleaned previous vaults (RW-1RS/RW-1RD). PVC Install within RW-100.

Site Visitors: Craig Moore - CDM Smith

Changed Conditions/Delays/Conflicts Encountered

SAFETY	SHSO: Nicholas McCarthy
Was a Job Safety Meeting Held This Date?	Yes
Was an EnSafe SWAP Completed?	Yes
Was work performed involving Confined Space Entry, Excavations, Lock Out Tag Out, chemical exposures, or heights? (See SWAP for details)	Yes
Are there any lost-time accidents this date?	No

Actions & Inspection:

CONTRACTORS ONSITE

Company	Personnel	Onsite	Offsite	Duration (hrs)
Hinck	2	07:00	15:00	8

EQUIPMENT ONSITE

Equipment	Safety Check	Used Hrs	Idle Hrs	Repair Hrs
Ford E super duty box truck	Hinck	8	0	0
Chevy C8500 truck to pick up and orient the VFD panels at RW-100	Hinck	0	0	0

EQUIPMENT/MATERIALS RECEIVED

Description	Lot/ID	Received By	Quantity
NA			

CONTRACTOR PRODUCTION REPORT

LOCKHEED MARTIN – GREAT NECK, NEW YORK SITE

LM Great Neck VFD OU1/OU2 - 04/12/2021

SAMPLING, TESTING & INSPECTIONS	
Description	**Company/Personnel**
NA	

WASTE ACCUMULATED, STOCKPILED AND TRANSPORTED OFFSITE
Description
NA

SUMMARY OF WORK ACTIVITIES		
Time	**Title**	**Notes**
07:00	OU1	Hinck's Gabe Costa (GC) and EnSafe's Nick McCarthy (NPM) arrive OU1. NPM gives Gabe Costa a safety meeting. Both parties head over to RW-1RD.
07:28	RW-1RD	NPM and GC are on site at RW-1RD. GC will be cleaning up the vaults of left over scrap material and installing the bulbs in the light fixtures that were previously installed.
08:07	RW-1RD	GC beings to unload some material and place it next to the vault. NPM calibrates the 4 gas meter. Both calibration gas readings come back normal. NPM opens Rw-1RD and places the gas monitoring hose into the vault. The readings come back normal. Refer to confined space sheet to see details of readings.
09:34	RW-1RS	GC moves onto cleaning Rw-1RS and installing the bulbs in the vaults light fixture.
10:15	RW-1RS	GC has finished installing light and cleaning up debris in RW-1RS. GC gets a call from Bob Herrmann(BH) that he will be arriving on site soon and would like to meet at RW-100.
10:29	GC and NPM head to RW-100	NPM and GC arrive at RW-100 along with BH. He is driving a large truck (Chevy 8500). The truck will be used to move and located the large panels of the VFD that will be delivered tomorrow. The truck will be left on site tonight.
10:43	RW-100	GC starts installing PVC conduit for some circuits in RW-100. He's starting near the ladder entrance where the lighting switch and receptacles will go. NPM gets word from BH that Eagle will be delivering their VFD set up tomorrow. BH says to expect the delivery around 8:00 am. It will include the components for the VFD as well as the harmonic filter for OU2.
12:14	RW-100	PVC installation continues.
13:00	RW-100	PVC conduit installation continued.

13:49	RW-100	Hinck begins to demobilize. They start taking tools out of the vault and organizing the. Arterial they are leaving within the vault.
15:00	Offsite	EnSafe and Hinck are both offsite. We will meet at RW-100 tomorrow.

PHOTO - RW-1RD	PHOTO - RW-1RD
	
Light installed in RW-1RD.	Alternate angle at RW-1RD.

PHOTO - RW-1RS	PHOTO - RW-1RS
	
Light in RW-1RS.	Alternate angle of light in RW-1RS.

PHOTO - RW-100	PHOTO - RW-100
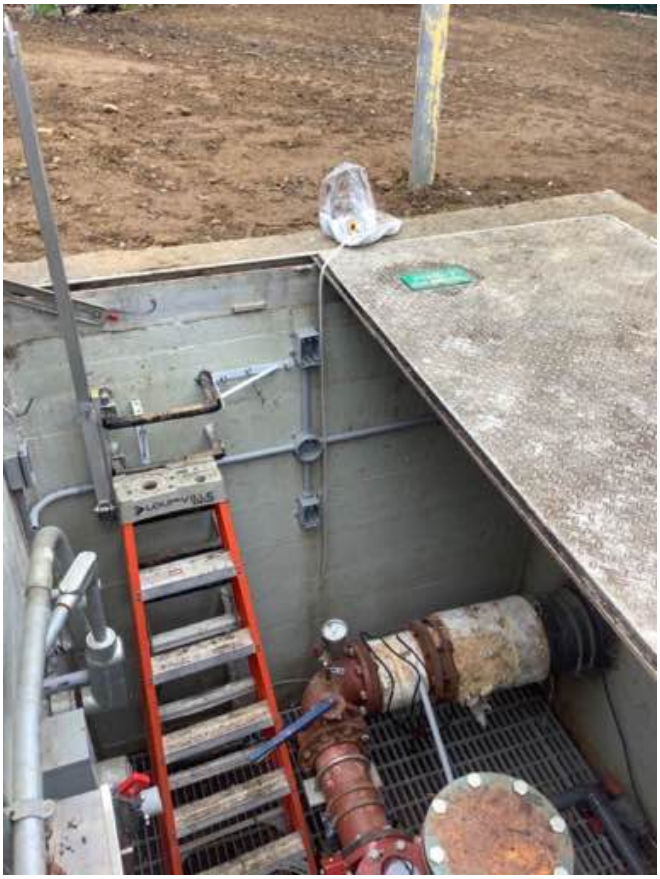	
Conduit install at RW-100. Photo of north facing wall.	Conduit install continued. Photo of west facing wall.

END REPORT

LM Great Neck VFD OU1/OU2 - 04/12/2021

CONTRACTOR PRODUCTION REPORT

LOCKHEED MARTIN – GREAT NECK, NEW YORK SITE

LM Great Neck VFD OU2 - 04/13/2021

PROJECT			
Project Name	LM Great Neck VFD OU2	**Date**	04/13/2021
Number	0888827878	**AM Weather**	Cloudy
Superintendent	Nicholas McCarthy	**PM Weather**	Sunny
Onsite Time	07:01	**Temperature**	max: 60°F min: 45°F

Summary of Work: Conduit installed at RW-100. Substation delivered by Hinck. Harmonic filter for OU2 delivered by Hinck.

Site Visitors: Dave - PES

Changed Conditions/Delays/Conflicts Encountered

SAFETY	SHSO: Nicholas McCarthy
Was a Job Safety Meeting Held This Date?	Yes
Was an EnSafe SWAP Completed?	Yes
Was work performed involving Confined Space Entry, Excavations, Lock Out Tag Out, chemical exposures, or heights? (See SWAP for details)	Yes
Are there any lost-time accidents this date?	No

Actions & Inspection:

CONTRACTORS ONSITE

Company	Personnel	Onsite	Offsite	Duration (hrs)
Hinck	2	07:00	15:00	8

EQUIPMENT ONSITE

Equipment	Safety Check	Used Hrs	Idle Hrs	Repair Hrs
Ford E super duty box truck	Hinck	8	0	0
Chevy C8500 boom truck	Hinck	2	0	0

EQUIPMENT/MATERIALS RECEIVED

Description	Lot/ID	Received By	Quantity
Substation for RW-100's VFD Harmonic filter for OU2		Hinck	1

CONTRACTOR PRODUCTION REPORT

LOCKHEED MARTIN – GREAT NECK, NEW YORK SITE

LM Great Neck VFD OU2 - 04/13/2021

SAMPLING, TESTING & INSPECTIONS	
Description	**Company/Personnel**
NA	

WASTE ACCUMULATED, STOCKPILED AND TRANSPORTED OFFSITE
Description
NA

SUMMARY OF WORK ACTIVITIES		
Time	**Title**	**Notes**
07:01	RW-100	Hinck's Bob Herrmann (BH) and Gabe Costa (GC) meet with EnSafe's Nick McCarthy (NPM) at RW-100. NPM conducts a safety meeting. He then unlocks gate and heads over to vault.
07:15	RW-100	NPM opens vault to let ventilate. He then bump checks the gas meter with both gases. Both tests pass, he puts the meters hose into the vault. The readings come back normal. Refer to confined space paperwork for details.
07:33	RW-100	Hinck begins to unload material and tools out of their truck to bring it over to the vault.
09:49	RW-100	Hinck begins to install PVC conduit in continuation from yesterday.
09:56	Delivery	Hinck gets a delivery which consists of a few important items. One being the harmonic filter for OU2. The substation for the VFD. More conduit. Dave with PES shows up on site at the time of the delivery.
10:06	OU2	Substation is dropped off and left on new poured concrete pad at RW-100. BH and NPM drive over to OU2 to unload harmonic filter.
10:25	OU2	The harmonic filter is set in place in OU2 until it will be installed. See pictures for details. Wayne with PES confirms the spot where it is placed is okay to remain there until installed. BH and NPM travel back to RW-100.
11:13	RW-100	BH informs NPM that Eagle will not be making their delivery today. They are still doing testing to their panel. BH says that are planning on coming at 10:30:tomorrow morning, but will try to push them to come earlier. GC remains on site and will continue to install conduit.
12:28	RW-100	GC is pulling wires through conduits.

13:30	RW-100	GC continues to pull wires into pipes. See photos for work progress.
14:15	Demobilization	Hinck begins to demobilize. They being to lift tools from the vault as well and organize the job site. Work will continue tomorrow. Eagle's delivery of VFD panel is scheduled for tomorrow at 10:30 am.
14:49	Offsite	Both Hinck and EnSafe are offsite. Site is locked and secured.

CONTRACTOR PRODUCTION REPORT

LOCKHEED MARTIN – GREAT NECK, NEW YORK SITE

LM Great Neck VFD OU2 - 04/13/2021

PHOTO - Delivery	PHOTO - OU2 Filter
	
Truck used for hoisting delivered items.	Harmonic filter on site at OU2.

PHOTO - Substation RW-100.



Substation received today with delivery.

PHOTO - Work progress.



More conduit installed. Light fixture hung. As well as wires being pulled through.

PHOTO - Work progress continued.



PVC installation continued.

END REPORT

LM Great Neck VFD OU2 - 04/13/2021

CONTRACTOR PRODUCTION REPORT

LOCKHEED MARTIN – GREAT NECK, NEW YORK SITE

LM Great Neck VFD OU2 - 04/14/2021

PROJECT			
Project Name	LM Great Neck VFD OU2	**Date**	04/14/2021
Number	0888827878	**AM Weather**	Cloudy
Superintendent	Nicholas McCarthy	**PM Weather**	Cloudy
Onsite Time	07:00	**Temperature**	max: 75°F min: 45°F
Summary of Work: Conduit installed in RW-100. Eagle delivered the remain pieces of the VFD.			
Site Visitors: Craig Moore - CDM Smith			

Changed Conditions/Delays/Conflicts Encountered

SAFETY	SHSO: Nicholas McCarthy
Was a Job Safety Meeting Held This Date?	Yes
Was an EnSafe SWAP Completed?	Yes
Was work performed involving Confined Space Entry, Excavations, Lock Out Tag Out, chemical exposures, or heights? (See SWAP for details)	Yes
Are there any lost-time accidents this date?	No
Actions & Inspection:	

CONTRACTORS ONSITE

Company	Personnel	Onsite	Offsite	Duration (hrs)
Hinck	2	07:00	15:00	8

EQUIPMENT ONSITE

Equipment	Safety Check	Used Hrs	Idle Hrs	Repair Hrs
Ford E super duty box truck	Hinck	8	0	0
Chevy C8500 boom truck	Hinck	1	0	0

EQUIPMENT/MATERIALS RECEIVED

Description	Lot/ID	Received By	Quantity
NA			

CONTRACTOR PRODUCTION REPORT

LOCKHEED MARTIN – GREAT NECK, NEW YORK SITE

LM Great Neck VFD OU2 - 04/14/2021

SAMPLING, TESTING & INSPECTIONS	
Description	**Company/Personnel**
NA	

WASTE ACCUMULATED, STOCKPILED AND TRANSPORTED OFFSITE
Description
RW-100 demolition waste: conduit and wiring

SUMMARY OF WORK ACTIVITIES		
Time	**Title**	**Notes**
07:00	RW-100	Hinck's Bob Herrmann (BH) and Gabe Costa (GC) as well as EnSafe's Nick McCarthy (NPM) meet at RW-100. NPM performs safety meeting and bump checks his gas meter. Hinck begins to unload material and tools. Hinck lowers tools into vault and begins to pull wires in continuation from yesterday.
09:09	CDM Smith	Craig Moore with CDM Smith is on site to observe some progress. GC has removed some corroded pipe from the vault as well as the heater that is very rusted.
10:58	Eagle delivery	Eagle's VFD panel delivery has arrived. Hinck is using the boom truck to the lift the large control cabinet out of the bed of Eagle's flat bed truck. A Large cabinet as well as smaller cabinet are unloaded from Eagle's truck. See photos for reference.
11:33	RW-100	Hinck is now setting up the large cabinet on the VFD concrete pad. GC is operating the boom truck. BH is cutting the PVC pipes that go into it the correct length. The cabinet is then lifted by the boom truck, lower onto the pipes. The pipes are traced out onto the cabinet, holes are drilled and the cabinet will be placed on top.
12:49	RW-100	Hinck is constructing the metal framing that will support the large cabinet, the smaller cabinet as well as the sub station. It is made of unistrut.
13:35	RW-100	Hinck is now marking out anchors for the large cabinet on the concrete pad, they have also marked out where the pvc comes up into the cabinet. GC lifts the cabinet into the air and will drill out the holes for the conduit to enter.
14:23	RW-100	Large cabinet is in place and bolted down. All conduits coming in are secured.
15:01	Offsite	Hinck and EnSafe are both offsite.

PHOTO - Large cabinet	PHOTO - Large cabinet
	
Large cabinet on concrete pad.	Large cabinet, alternate angle.

PHOTO - Small cabinet	PHOTO - PVC coming into large cabinet.
	
Small cabinet after delivery.	PVC is cut into the large cabinet and secured.

PHOTO - Waste



Waste generated from today.

CONTRACTOR PRODUCTION REPORT

LOCKHEED MARTIN – GREAT NECK, NEW YORK SITE

LM Great Neck VFD OU2 - 04/14/2021

PHOTO - Work progress



Today’s end of day work progress photo.

END REPORT

LM Great Neck VFD OU2 - 04/14/2021

CONTRACTOR PRODUCTION REPORT

LOCKHEED MARTIN – GREAT NECK, NEW YORK SITE

LM Great Neck VFD OU2 - 04/15/2021

PROJECT			
Project Name	LM Great Neck VFD OU2	**Date**	04/15/2021
Number	0888827878	**AM Weather**	Cloudy
Superintendent	Nicholas McCarthy	**PM Weather**	Sunny
Onsite Time	07:00	**Temperature**	max: 60°F min: 45°F
Summary of Work: Substation mounted at RW-100. Harmonic filter mounted at OU2.			
Site Visitors:			

Changed Conditions/Delays/Conflicts Encountered

SAFETY	SHSO: Nicholas McCarthy
Was a Job Safety Meeting Held This Date?	Yes
Was an EnSafe SWAP Completed?	Yes
Was work performed involving Confined Space Entry, Excavations, Lock Out Tag Out, chemical exposures, or heights? (See SWAP for details)	No
Are there any lost-time accidents this date?	No
Actions & Inspection:	

CONTRACTORS ONSITE

Company	Personnel	Onsite	Offsite	Duration (hrs)
Hinck	2	07:00	15:00	8

EQUIPMENT ONSITE

Equipment	Safety Check	Used Hrs	Idle Hrs	Repair Hrs
Ford E super duty box truck	Hinck	8	0	0
Chevy c8500 boom truck	Hinck	1	0	0

EQUIPMENT/MATERIALS RECEIVED

Description	Lot/ID	Received By	Quantity
NA			

CONTRACTOR PRODUCTION REPORT

LOCKHEED MARTIN – GREAT NECK, NEW YORK SITE

LM Great Neck VFD OU2 - 04/15/2021

SAMPLING, TESTING & INSPECTIONS	
Description	**Company/Personnel**
NA	

WASTE ACCUMULATED, STOCKPILED AND TRANSPORTED OFFSITE
Description
NA

SUMMARY OF WORK ACTIVITIES		
Time	**Title**	**Notes**
07:02	RW-100	Nick McCarthy (NPM) with EnSafe arrives at RW-100. He Bump checks the gas meter and opens the vault for ventilation. Hinck arrives on site. Bob Herrmann (BH) and Gabe Costa (GC). NPM conducts safety meeting. BH informs NPM that I can close the vault up today because they will be working on hanging more components of the VFD. No confined space work will be performed and no circuits are energized near the work they are doing. Refer to SWAP for safety practices for today.
07:31	RW-100	Hinck begins to unload tools from their truck. They are going to start the day by mounting the substation to the frame that was constructed yesterday.
08:04	RW-100	The substation is mounted. Hinck and EnSafe head over to OU2 to begin work on the harmonic filter.
09:21	OU2	Hinck is beginning to unpackaged the harmonic filter. They are removing all of the wood that the filter came packaged in, as well as removing shrink wrap around it.
10:23	OU2	Hinck is prepping unistrut by taking measurements and cutting to mount to the wall. They are also drilling into the brick and setting anchors to hold the unistrut.
11:25	OU2	Hinck is prepping for the hanging of the harmonic filter. There are pieces on unistrut on both sides of the brick wall to support the harmonic filter. See photos for detail.
13:33	OU2	The harmonic filter is mounted and secured. See photos for details.

CONTRACTOR PRODUCTION REPORT

LOCKHEED MARTIN – GREAT NECK, NEW YORK SITE

LM Great Neck VFD OU2 - 04/15/2021

PHOTO - Unistrut.	PHOTO - Harmonic filter
	
Unistrut on backside of wall to where the filter is mounted for support purposes.	Harmonic filter is installed and secured.

PHOTO - Harmonic filter.



Alternate angle of harmonic filter.

END REPORT

LM Great Neck VFD OU2 - 04/15/2021

CONTRACTOR PRODUCTION REPORT

LOCKHEED MARTIN – GREAT NECK, NEW YORK SITE

LM Great Neck VFD OU2 - 04/16/2021

PROJECT			
Project Name	LM Great Neck VFD OU2	**Date**	04/16/2021
Number	0888827878	**AM Weather**	Cloudy
Superintendent	Nicholas McCarthy	**PM Weather**	Sunny
Onsite Time	07:01	**Temperature**	max: 60°F min: 45°F
Summary of Work: Small cabinet mounted at RW-100			
Site Visitors:			

Changed Conditions/Delays/Conflicts Encountered

SAFETY	SHSO: Nicholas McCarthy
Was a Job Safety Meeting Held This Date?	Yes
Was an EnSafe SWAP Completed?	Yes
Was work performed involving Confined Space Entry, Excavations, Lock Out Tag Out, chemical exposures, or heights? (See SWAP for details)	Yes
Are there any lost-time accidents this date?	No
Actions & Inspection:	

CONTRACTORS ONSITE

Company	Personnel	Onsite	Offsite	Duration (hrs)
Hinck	2	07:00	15:00	8

EQUIPMENT ONSITE

Equipment	Safety Check	Used Hrs	Idle Hrs	Repair Hrs
Ford E super duty box truck	Hinck	8	0	0

EQUIPMENT/MATERIALS RECEIVED

Description	Lot/ID	Received By	Quantity
NA			

CONTRACTOR PRODUCTION REPORT

LOCKHEED MARTIN – GREAT NECK, NEW YORK SITE

LM Great Neck VFD OU2 - 04/16/2021

SAMPLING, TESTING & INSPECTIONS	
Description	**Company/Personnel**
NA	

WASTE ACCUMULATED, STOCKPILED AND TRANSPORTED OFFSITE
Description
NA

SUMMARY OF WORK ACTIVITIES		
Time	**Title**	**Notes**
07:00	OU1	Hinck's Gabe Costa (GC) and EnSafe's Nick McCarthy (NPM) meet at OU1. Both parties convoy over to RW-100 to meet with Hinck's Bob Herrmann (BH).
07:16	RW-100	NPM and GC arrive at RW-100 and meet up with BH. NPM conducts a safety meeting. NPM bump checks the gas meter with both calibration gases. The results come back fine. Refer to daily confined space form attached to the report. NPM unlocks gate, head over to vault and unlocks that as well. The vault ventilates for 5 minutes then NPM drops the gas meters hose down inside it. The readings come back fine. Hinck begins to unload tools and bring material over to work zone.
07:39	Small Cabinet (RCP)	Hinck begins the day by starting to mount the small cabinet (Last piece to the VFD) at RW-100. They drill hops in the underside of the cabinet where the PVC pipes will come up into it from the ground.
08:41	Small cabinet (RCP)	Drilling for PVC pipes continues.
09:34	Small cabinet (RCP)	Hinck is now operating the boom truck to lift the small cabinet up and lower it onto the PVC piping.
10:19	Small cabinet (RCP)	Hinck has completed RCP installation. The PVC piping is in and the cabinet is secured to the rack.
12:09	Small cabinet (RCP)	Hinck is pulling grounds through the VFD cabinets.
14:02	Small Cabinet	Grounds have been pulled through each cabinet and down into the vault.
14:30	Demobilization	Hinck begins to demobilize and clean up the site.
15:00	Offsite	Both Hinck and EnSafe are offsite, the site is locked and secured.

PHOTO - RW100	PHOTO - RW100
	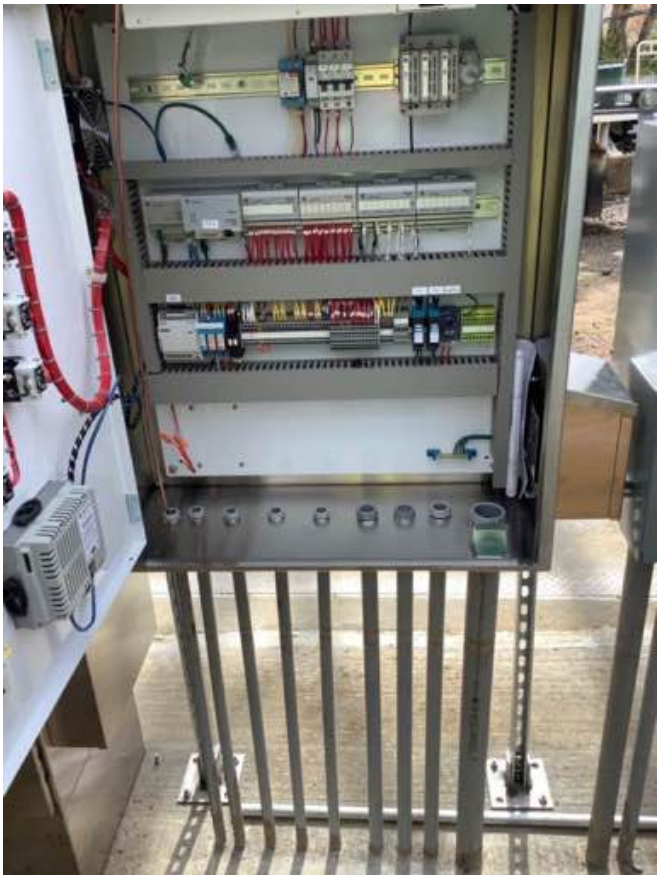
Cabinets installed and secured to the ground.	Inside the cabinet with PVC installed.

END REPORT

LM Great Neck VFD OU2 - 04/16/2021

CONTRACTOR PRODUCTION REPORT

LOCKHEED MARTIN – GREAT NECK, NEW YORK SITE

Lockheed Great Neck VFD Electrical - 04/19/2021

PROJECT			
Project Name	Lockheed Great Neck VFD Electrical	**Date**	04/19/2021
Number	0888827878	**AM Weather**	clear
Superintendent	Rob McCarthy	**PM Weather**	clear, warm
Onsite Time	07:00	**Temperature**	max: 60°F min: 50°F
Summary of Work: Shutdown RW-100, LOTO, start demo in RW-100 vault			
Site Visitors: Wayne			

Changed Conditions/Delays/Conflicts Encountered

SAFETY	SHSO: Rob McCarthy
Was a Job Safety Meeting Held This Date?	No
Was an EnSafe SWAP Completed?	No
Was work performed involving Confined Space Entry, Excavations, Lock Out Tag Out, chemical exposures, or heights? (See SWAP for details)	No
Are there any lost-time accidents this date?	No
Actions & Inspection:	

CONTRACTORS ONSITE

Company	Personnel	Onsite	Offsite	Duration (hrs)
Hinck	2	07:00	12:30	6

EQUIPMENT ONSITE

Equipment	Safety Check	Used Hrs	Idle Hrs	Repair Hrs
NA		0	0	0

EQUIPMENT/MATERIALS RECEIVED

Description	Lot/ID	Received By	Quantity
NA			

CONTRACTOR PRODUCTION REPORT

LOCKHEED MARTIN – GREAT NECK, NEW YORK SITE

Lockheed Great Neck VFD Electrical - 04/19/2021

SAMPLING, TESTING & INSPECTIONS	
Description	**Company/Personnel**
NA	

WASTE ACCUMULATED, STOCKPILED AND TRANSPORTED OFFSITE
Description
Demolition of panels, conduit, waste electrical from RW-100 vault.

SUMMARY OF WORK ACTIVITIES		
Time	**Title**	**Notes**
07:00	Rob and Hinck personnel at site	
07:20	meeting, plan for day	Discuss RW-100 shutdown with Wayne and Dave, schedule for week, expect restart later in week
07:30	mobilize to RW-100	Wayne, Bob, Gabe, rob over to RW-100
07:40	RW-100 open	Wayne opened RW-100 vault, metering, prep to demo
07:55	RW-100 shutdown	Wayne and Bob over to OU2 treatment building to shutdown RW-100 pump and complete LOTO. 8:02, RW-100 shutdown.
08:30	demo	Bob back at RW-100, working on demo, conduit, boxes.
10:00	moving boxes to pickup	Using boom truck to lift boxes out of vault, placing in pickup.
11:30		Moving waste material to pick up, junk conduit and boxes out of vault.
11:47		Heading toward OU1 to unload pick up
12:30	Hinck done unloading, heading off site	

CONTRACTOR PRODUCTION REPORT

LOCKHEED MARTIN – GREAT NECK, NEW YORK SITE

Lockheed Great Neck VFD Electrical - 04/19/2021

PHOTO – RW-100 demo	PHOTO -
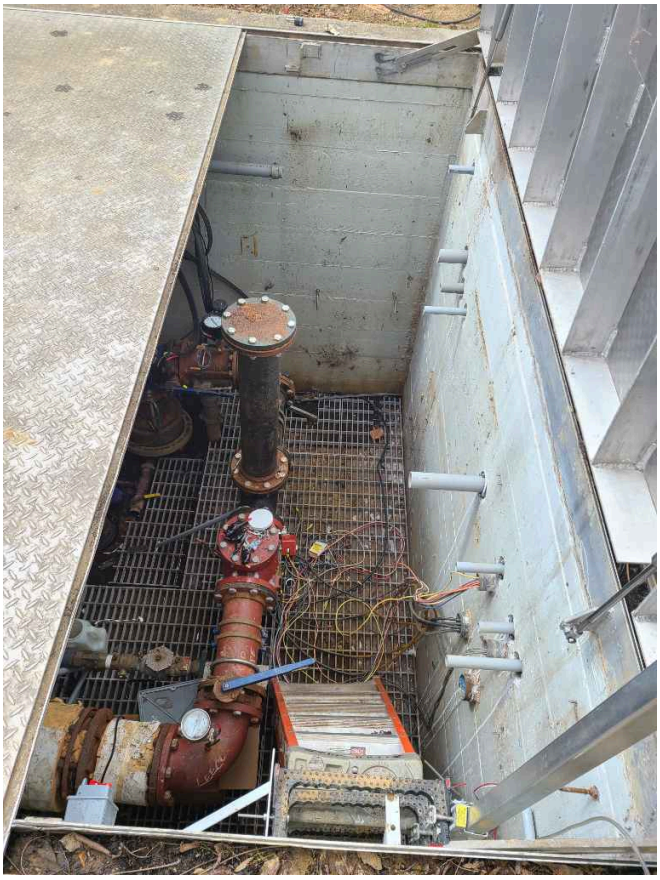	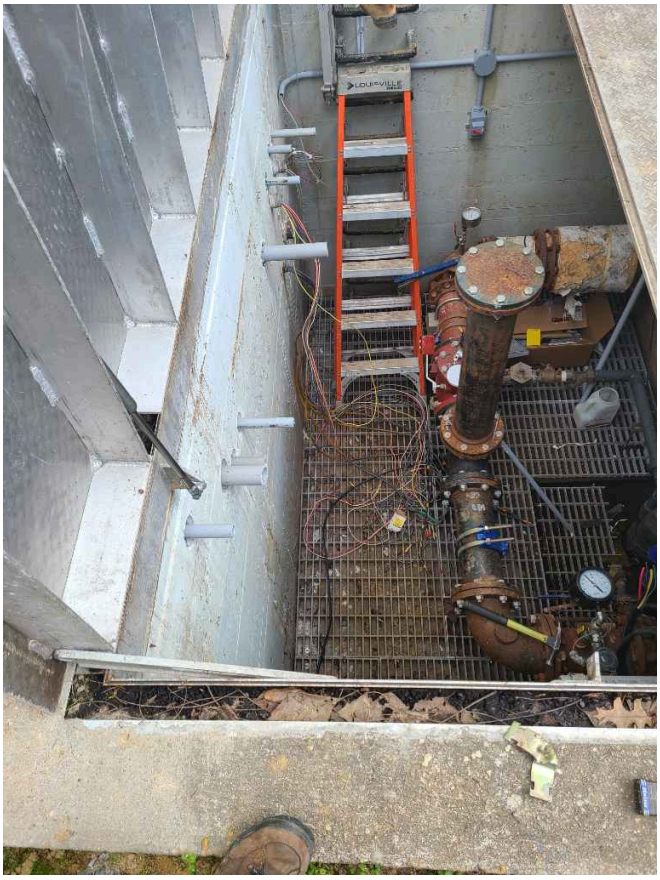
Demo mostly complete at RW-100	Demo mostly complete at RW-100

CONTRACTOR PRODUCTION REPORT

LOCKHEED MARTIN – GREAT NECK, NEW YORK SITE

Lockheed Great Neck VFD Electrical - 04/19/2021

PHOTO -



Waste materials from RW-100 added to stockpile

END REPORT

Lockheed Great Neck VFD Electrical - 04/19/2021

CONTRACTOR PRODUCTION REPORT

LOCKHEED MARTIN – GREAT NECK, NEW YORK SITE

LM Great Neck - 04/20/2021

PROJECT			
Project Name	LM Great Neck	**Date**	04/20/2021
Number	0888827878	**AM Weather**	Sunny
Superintendent	Marshall Gibson	**PM Weather**	Sunny
Onsite Time	07:00	**Temperature**	max: 70°F min: 50°F
Summary of Work: Electrical upgrades at RW-100 vault			
Site Visitors: Craig Moore – CDM Smith			

Changed Conditions/Delays/Conflicts Encountered

SAFETY	SHSO: Marshall Gibson
Was a Job Safety Meeting Held This Date?	Yes
Was an EnSafe SWAP Completed?	Yes
Was work performed involving Confined Space Entry, Excavations, Lock Out Tag Out, chemical exposures, or heights? (See SWAP for details)	No
Are there any lost-time accidents this date?	No
Actions & Inspection:	

CONTRACTORS ONSITE

Company	Personnel	Onsite	Offsite	Duration (hrs)
Hinck	1	07:00	14:15	7

EQUIPMENT ONSITE

Equipment	Safety Check	Used Hrs	Idle Hrs	Repair Hrs
Box Truck with supplies	Hinck	8	0	0
Chevy C8500 10-wheel Boom Truck	Hinck	0	0	0

EQUIPMENT/MATERIALS RECEIVED

Description	Lot/ID	Received By	Quantity
NA			

CONTRACTOR PRODUCTION REPORT

LOCKHEED MARTIN – GREAT NECK, NEW YORK SITE

LM Great Neck - 04/20/2021

SAMPLING, TESTING & INSPECTIONS	
Description	**Company/Personnel**
NA	

WASTE ACCUMULATED, STOCKPILED AND TRANSPORTED OFFSITE
Description
NA

SUMMARY OF WORK ACTIVITIES		
Time	**Title**	**Notes**
07:00	Mobilization	MBG on-site at OU1 Hinck - Bob Hermann (BM) on-site BM indicates just 1-man crew today. MBG/BM look at OU1 harmonic filter location and measure to verify dimensions of unit will fit on concrete pad - no issues noted. MBG/BM off to RW-100
07:45	Mobilization	MBG/BM on-site at RW-100 BM opens vault to allow to start passively ventilating. MBG conducts H&S meeting
08:00	Air Monitoring	MBG calibrates 4-gas meter - see form Deploy 4-gas at vault: O2 = 20.9% CO = 0ppm LEL = 0% H2S = 0ppm VOC = 1ppm Based on 4-gas readings give Hinck clearance to enter vault
08:20	Electrical	Hinck is working on installing plastic junction boxes in vault.
08:45	CDM Smith	Craig Moore with CDM Smith onsite

09:29	Air Monitoring	Check MiniRae O2 = 20.9% CO = 0ppm H2S = 0ppm LEL = 0% VOCs = drifting between 1 - 2 ppm
09:49	Hinck delivery	Hinck delivers small amount of assorted PVC fitting and miscellaneous materials for project
11:00	CDM Smith	CDM Smith offsite
11:01	Electrical	BM working on installing uni-strut for junction boxes. Hinck workflow is installing junction box/conduit before moving to next uni-strut mount, etc. 1 junction box and associated pull boxes/conduit complete, working on second setup.
11:05	Air Monitoring	Check 4-gas O2 = 21.3%. Pull drop tubing and ambient air reads similar. No corrective action. H2S = 0ppm CO = 0ppm LEL = 0% VOCs = 1ppm
12:05	CDM Smith	Craig back onsite
12:20	Electrical	Hinck hangs main shutoff cabinet to vault Working on conduit
13:49	Electrical	Two more 6”x6” junction boxes installed and some wires pulled
13:51	Air Monitoring	4-gas running ok O2 = 21.3% CO = 0ppm H2S = 0ppm LEL = 0% VOCs = 1ppm
14:15	Demobilization	Hinck indicates done for day. Have one more junction box and some additional conduit to run tomorrow. Hinck offsite with box truck to OU1
14:15	Demobilization	CDM Smith offsite

		MBG ensures vault secured
14:20	Demobilization	Locks gate
		MBG offsite

CONTRACTOR PRODUCTION REPORT

LOCKHEED MARTIN – GREAT NECK, NEW YORK SITE

LM Great Neck - 04/20/2021

PHOTO - End of day	PHOTO - End of day
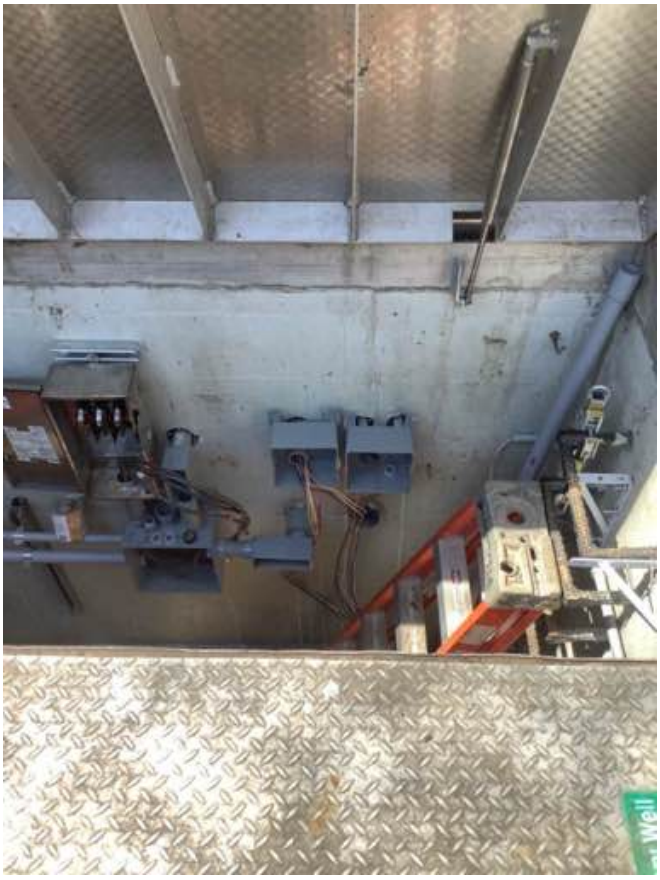	
Vault work end of day	Vault work end of day

CONTRACTOR PRODUCTION REPORT

LOCKHEED MARTIN – GREAT NECK, NEW YORK SITE

LM Great Neck - 04/20/2021

PHOTO - End of day



Site secure

END REPORT

LM Great Neck - 04/20/2021

CONTRACTOR PRODUCTION REPORT

LOCKHEED MARTIN – GREAT NECK, NEW YORK SITE

LM Great Neck - 04/22/2021

PROJECT			
Project Name	LM Great Neck	**Date**	04/22/2021
Number	0888827878	**AM Weather**	Sunny
Superintendent	Marshall Gibson	**PM Weather**	Sunny
Onsite Time	07:00	**Temperature**	max: 45°F min: 30°F
Summary of Work: Continue electrical upgrades at RW-100			
Site Visitors: Craig Moore – CDM Smith			

Changed Conditions/Delays/Conflicts Encountered

SAFETY	SHSO: Marshall Gibson
Was a Job Safety Meeting Held This Date?	Yes
Was an EnSafe SWAP Completed?	Yes
Was work performed involving Confined Space Entry, Excavations, Lock Out Tag Out, chemical exposures, or heights? (See SWAP for details)	No
Are there any lost-time accidents this date?	No
Actions & Inspection:	

CONTRACTORS ONSITE

Company	Personnel	Onsite	Offsite	Duration (hrs)
Hinck	2	07:00	12:00	5

EQUIPMENT ONSITE

Equipment	Safety Check	Used Hrs	Idle Hrs	Repair Hrs
Box truck with assorted equipment	Hinck	0	0	0
Chevy C8500 boom truck	Hinck	0	0	0

EQUIPMENT/MATERIALS RECEIVED

Description	Lot/ID	Received By	Quantity
NA			

CONTRACTOR PRODUCTION REPORT

LOCKHEED MARTIN – GREAT NECK, NEW YORK SITE

LM Great Neck - 04/22/2021

SAMPLING, TESTING & INSPECTIONS	
Description	**Company/Personnel**
NA	

WASTE ACCUMULATED, STOCKPILED AND TRANSPORTED OFFSITE
Description
NA

SUMMARY OF WORK ACTIVITIES		
Time	**Title**	**Notes**
07:00	Mobilization	MBG on-site at OU1 Hinck on-site Foreman- Bob Hermonn (BH) Assistant - Gabe Costa (GC) Team heads to RW-100
07:10	Mobilization	Team arrives at RW-100 MBG conducts H&S meeting
07:20	Air monitoring	MBG calibrates 4-gas meter - see form Open RW-100 and allow to passively ventilate for 5-min. O2 = 20.9% H2S = 0ppm CO = 0ppm LEL = 0% VOCs = 0ppm Give Hinck approval to enter vault
07:45	Electrical work	Discuss RW-100 start-up schedule with BH BH indicates that Eagle's earliest availability is next Tuesday. BH believes it may not take a full day for Eagle to complete programming so may be ready for start-up either late-Tuesday or Wednesday morning. BH indicates tentative schedule will be support re-start Tuesday then set harmonic filter at OU1 on Wednesday. BH indicates

		that if RW-100 start-up occurs Wednesday Hinck can support both activities. Hinck will not be onsite tomorrow or Monday. MBG contacts both RM and Dave Kahn with tentative schedule.
08:15	CDM Smith	Craig Moore with CDM Smith on-site Go over general schedule and progress update with him
08:30	Electrical work	Call RM to discuss overall project schedule and update.
09:02	Air Monitoring	Check 4-gas meter O2 = 20.9% LEL = 0% CO = 0ppm H2S = 0ppm VOCs = 0ppm
09:54	Air Monitoring	Check 4-gas readings same as 0902
09:55	Electrical work	Hinck still or king on wiring between vault and above ground control panels MBG offsite to OU1 to address electrical waste
11:40	Electrical work	MBG back on-site at RW-100 Hinck is wrapping up for day. Tom Whitaker on-site (AMEC), as well. Tom indicates he was onsite around 1115
12:03	Demobilization	Team offsite for day. MBG and CDM Smith go back to OU1 for waste management
13:20	Waste Management	MBG called Randy Burnett with IRT regarding waste. Asked if both asphalt and demo waste could be put in same bins (co-mingled) or separated. Rand indicated OK for both asphalt and demo debris into same bins (ok to co-mingle) MBG and Craig with CDM Smith brought over asphalt and plastic electrical junction boxes to bins. MBG then loads up truck for second run to bins
13:25	CDM Smith	Craig Moore offsite
13:37	Waste Management	All waste from OU1/RW-100 not segregated for metal recycling in 2 bins at SSDS. 1 bin full second approx. three-quarters full.

		Return to OU1 and cover remaining scrap metal pile
14:00	Demobilization	MBG offsite and to Pine to pick-up CAMP equipment. Call RM and provide update on today's progress

PHOTO - Electrical waste	PHOTO - End of day
	
Electrical waste at OU1. No additional substantive amounts to be generated	Wiring at end of day

PHOTO - Waste	PHOTO - Waste
	
Demo waste	Predominantly asphalt waste

PHOTO - Waste	PHOTO - Scrap metal waste
	
The two waste bins	Scrap metal pile covered

END REPORT

LM Great Neck - 04/22/2021

CONTRACTOR PRODUCTION REPORT

LOCKHEED MARTIN – GREAT NECK, NEW YORK SITE

LM Great Neck VFD OU1/OU2 - 04/28/2021

PROJECT			
Project Name	LM Great Neck VFD OU1/OU2	**Date**	04/28/2021
Number	0888827878	**AM Weather**	Sunny
Superintendent	Nicholas McCarthy	**PM Weather**	Sunny
Onsite Time	07:00	**Temperature**	max: 80°F min: 50°F

Summary of Work: Harmonic filter mounted at OU1. RW-100 test run. Ran into issues with some clogged pipes. 1 hour of work performed at OU1, remainder of day spent at RW-100.

Site Visitors: Dave - PES
Paul Lanzilotta and Mike Hagan - Eagle Control
Craig Moore - CDM Smith

Changed Conditions/Delays/Conflicts Encountered

SAFETY	SHSO: Nicholas McCarthy
Was a Job Safety Meeting Held This Date?	Yes
Was an EnSafe SWAP Completed?	Yes
Was work performed involving Confined Space Entry, Excavations, Lock Out Tag Out, chemical exposures, or heights? (See SWAP for details)	Yes
Are there any lost-time accidents this date?	No

Actions & Inspection:

CONTRACTORS ONSITE

Company	Personnel	Onsite	Offsite	Duration (hrs)
Hinck	2	07:00	15:00	8
Eagle Control	2	08:00	15:00	7

EQUIPMENT ONSITE

Equipment	Safety Check	Used Hrs	Idle Hrs	Repair Hrs
Chevy 8500 Boom truck	Hinck	1	0	0
Ford E super duty box truck	Hinck	8	0	0

CONTRACTOR PRODUCTION REPORT

LOCKHEED MARTIN – GREAT NECK, NEW YORK SITE

LM Great Neck VFD OU1/OU2 - 04/28/2021

EQUIPMENT/MATERIALS RECEIVED			
Description	**Lot/ID**	**Received By**	**Quantity**
OU1 harmonic filter brought on Hinck flatbed truck		Hinck	1

SAMPLING, TESTING & INSPECTIONS	
Description	**Company/Personnel**
RW-100/OU2 Startup and Testing (not completed due to clogged dials)	Project Team

WASTE ACCUMULATED, STOCKPILED AND TRANSPORTED OFFSITE
Description
NA

SUMMARY OF WORK ACTIVITIES		
Time	**Title**	**Notes**
07:00	OU1	Hinck's Bob Herrmann (BH) and Gabe Costa (GC) arrive at OU1 with EnSafe's Nick McCarthy (NPM). NPM conducts a safety meeting. GC and NPM drive over to RW-100 to get Hinck's box truck. BH remains at OU1.
07:08	RW-100	GC gets into box truck and both parties head back to OU1. NPM secures RW-100 prior to leaving.
07:30	OU1	GC and NPM meet back up with BH at OU1. Hinck has a delivery with Consisting of the harmonic filter for OU1 and a boom truck on site. The boom truck sets up then the delivery flat bed comes in behind. BH tethers the filter to the boom truck and it gets hoisted into the air.
08:25	OU1	The filters holes at the base are marked out, hammer drilled and anchors are put in place. The filter is then lifted and lowered onto the anchors. The filter is secure in place.
08:36	OU1	Hinck and EnSafe head over to RW-100 to meet with Eagle.
10:26	RW-100	Paul Lanzilotta and Mike Hagan with Eagle are on site at RW-100.
11:46	RW-100	Hinck is with Eagle within the vault figuring out logistics to some minor errors.
12:45	OU2	Mike and Paul head to OU2 to work out some minor issues.
13:47	RW-100	Mike and Paul are back on site at RW-100. They are good on both ends of communication between RW-100 and OU2. They are ready to bump start the system to test it momentarily.

13:49	RW-100	Dave with PES is on site. He will oversee the start up and follow his procedure while taking readings.
14:38	RW-100	PES ran into some issues with the pressure read out dials. The two of them that are in the vault were clogged with a fine packed sediment. Dave will change of the fitting leading to the gauges while the vault is shut down tomorrow AM. Testing will resume after the gauges are giving correct read outs. Hinck begins to demobilize.
15:01	Offsite	Eagle, Hinck PES and CDM Smith are all off site. NPM locks and secures the vault, as well as the entrance gate. EnSafe is offsite.

PHOTO - OU1	PHOTO - OU1.
	
Boom truck used to hoist the filter up and set it in place.	Photo of the filters internals along with the label.

CONTRACTOR PRODUCTION REPORT

LOCKHEED MARTIN – GREAT NECK, NEW YORK SITE

LM Great Neck VFD OU1/OU2 - 04/28/2021

PHOTO - OU1	PHOTO - OU1
	
Close up of the mounting hardware on the harmonic filter.	Harmonic filter mounted and secured.

PHOTO - RW-100	PHOTO - RW-100
	
One of the fitting stems that is going to be replaced.	The second fitting stem that will be replaced tomorrow morning.

END REPORT

LM Great Neck VFD OU1/OU2 - 04/28/2021

CONTRACTOR PRODUCTION REPORT

LOCKHEED MARTIN – GREAT NECK, NEW YORK SITE

LM Great Neck VFD OU1|OU2 - 04/29/2021

PROJECT			
Project Name	LM Great Neck VFD OU1|OU2	**Date**	04/29/2021
Number	0888827878	**AM Weather**	Sunny
Superintendent	Nicholas McCarthy	**PM Weather**	Sunny
Onsite Time	07:00	**Temperature**	max: 80°F min: 50°F

Summary of Work: Transducer installed at RW-1RD, RW-1RS and EW-1. Communication problems at RW-100. Did not get resolved. Safety fence put up at DW-15.

Site Visitors: Tom Whitaker - AMEC

Changed Conditions/Delays/Conflicts Encountered

SAFETY	SHSO: Nicholas McCarthy
Was a Job Safety Meeting Held This Date?	Yes
Was an EnSafe SWAP Completed?	Yes
Was work performed involving Confined Space Entry, Excavations, Lock Out Tag Out, chemical exposures, or heights? (See SWAP for details)	Yes
Are there any lost-time accidents this date?	No

Actions & Inspection:

CONTRACTORS ONSITE

Company	Personnel	Onsite	Offsite	Duration (hrs)
Hinck	2	07:00	15:00	8
Eagle Control	1	10:31	15:27	5

EQUIPMENT ONSITE

Equipment	Safety Check	Used Hrs	Idle Hrs	Repair Hrs
Ford E super duty box truck	Hinck	8	0	0

EQUIPMENT/MATERIALS RECEIVED

Description	Lot/ID	Received By	Quantity
NA			

CONTRACTOR PRODUCTION REPORT

LOCKHEED MARTIN – GREAT NECK, NEW YORK SITE

LM Great Neck VFD OU1|OU2 - 04/29/2021

SAMPLING, TESTING & INSPECTIONS	
Description	**Company/Personnel**
NA	

WASTE ACCUMULATED, STOCKPILED AND TRANSPORTED OFFSITE
Description
NA

SUMMARY OF WORK ACTIVITIES		
Time	**Title**	**Notes**
07:00	RW-100	Hinck's Gabe Costa (GC) and Bob Herrmann (BH) meet EnSafe's Nick McCarthy (NPM) at RW-100. NPM opens the vault to let ventilate. He then bump checks the gas meter with both calibration gases. Both tests come back normal. Refer to confined space sheet for details. NPM lowers the monitors hose into the vault. The readings come back normal. Hinck is able to work in the vault.
07:19	RW-100	BH informs NPM that Mike Hagan with Eagle will be arriving at 11am. Hinck doesn't have much to do at RW-100 until Mike arrives so NPM closes up the vault and heads to RW-1RS/RW-1RD.
07:37	RW-1RD	Hinck will begin to prep for the mounting of the transducer box in both vaults. GC will start in RW-1RD. Hinck begins to unload tools and material from their truck. NPM opens the vault and drops the hose into the vault. The readings come back fine. NPM gives GC permission to start work.
09:20	RW-1RD	GC is mounting the transducer box in RW-1RD. He will mount the box and terminate the wires associated.
10:13	RW-1RD	BH heads over to RW-100 to meet with Dave from PES. Dave has finished swapping out the clogged pipe fitting with new ones. BH will terminate a wire that disconnected to fix the fitting. GC and NPM remain at RW-1RD.
11:20		GC has finished mounting the transducer box and terminating the wires. He moves onto installing the transducer in RW-1RS.
12:13	RW-1RS	GC has completed the installation of the transducer box and termination of wires. EnSafe , Hinck and AMEC move onto EW-1 to install the transducer.

13:04	EW-1	Hinck completes the installation of the transducer within EW-1. NPM heads to DW-15 to remove the plastic that the plastic that was left behind that was placed under the drill rig when it was in operation. Hinck heads to RW-100.
13:32	DW-15	NPM folds up plastic sheeting and places it in the back of his truck. He also puts up fencing barricade at the entrance of the job site. NPM heads to RW-100.
13:43	RW-100	Hinck parks their box truck at RW-100 and heads offsite. Dave with PES and Mike Hagan are at RW-100 troubleshooting some communication issues.
15:01	RW-100	Mike will continue trouble shooting tomorrow morning and the testing should be performed on Monday.
15:30	Offsite	PES, Eagle and EnSafe head offsite. The site is secured and the fences are locked.

PHOTO - RW-1RD	PHOTO - RW-1RD
	
Transducer box with transducer cable going into well.	Alternate angle of transducer box.

PHOTO - RW-1RS	PHOTO - RW-1RS
	
Transducer box with associated cable.	Alternate angle of transducer box.

END REPORT

LM Great Neck VFD OU1|OU2 - 04/29/2021

CONTRACTOR PRODUCTION REPORT

LOCKHEED MARTIN – GREAT NECK, NEW YORK SITE

LM Great Neck VFD OU2 - 04/30/2021

PROJECT			
Project Name	LM Great Neck VFD OU2	**Date**	04/30/2021
Number	0888827878	**AM Weather**	Cloudy
Superintendent	Nicholas McCarthy	**PM Weather**	Sunny
Onsite Time	07:01	**Temperature**	max: 65°F min: 50°F
Summary of Work: Support installed on VFD rack at RW-100. Pipe work started on Harmonic filter at OU2			
Site Visitors:			

Changed Conditions/Delays/Conflicts Encountered

SAFETY	SHSO: Nicholas McCarthy
Was a Job Safety Meeting Held This Date?	Yes
Was an EnSafe SWAP Completed?	Yes
Was work performed involving Confined Space Entry, Excavations, Lock Out Tag Out, chemical exposures, or heights? (See SWAP for details)	Yes
Are there any lost-time accidents this date?	No
Actions & Inspection:	

CONTRACTORS ONSITE

Company	Personnel	Onsite	Offsite	Duration (hrs)
Hinck	2	07:00	13:21	6
Eagle Control	1	08:00	15:00	7

EQUIPMENT ONSITE

Equipment	Safety Check	Used Hrs	Idle Hrs	Repair Hrs
Ford E super duty box truck	Hinck	8	0	0

EQUIPMENT/MATERIALS RECEIVED

Description	Lot/ID	Received By	Quantity
Harmonic filter conduit and fitting			

CONTRACTOR PRODUCTION REPORT

LOCKHEED MARTIN – GREAT NECK, NEW YORK SITE

LM Great Neck VFD OU2 - 04/30/2021

SAMPLING, TESTING & INSPECTIONS	
Description	**Company/Personnel**
NA	

WASTE ACCUMULATED, STOCKPILED AND TRANSPORTED OFFSITE
Description
NA

SUMMARY OF WORK ACTIVITIES		
Time	**Title**	**Notes**
07:02	RW-100	Hinck's Bob Herrmann (BH) and Gabe Costa (GC) meet with EnSafe's Nick McCarthy (NPM) at RW-100. Mike Hagan with Eagle is on site as well. NPM unlocks the job site. Hinck begins to unload tooling and material. There won't be any confined space done at RW-100. The vault will remain locked. No gas monitoring.
07:51	RW-100	Hinck begins the day installing unistrut behind the VFD cabinets to add more support. Mike continues troubleshooting from yesterday.
08:38	RW-100	Mike heads over to OU2 to work something out on his end. Hinck stays at RW-100 finishing the support strut.
09:49	RW-100	Hinck completes the support strut at RW-100. Hinck and EnSafe head over to OU2 to continue work on the harmonic filter.
09:57	OU2	Hinck unloads tooling and material to begin work on the harmonic filter at OU2. No confined space work will happen at OU2. No need for gas monitor.
10:38	OU2	Hinck receives a delivery consisting on conduit and fitting for the harmonic filter at OU2.
11:13	OU2	GC continues work at on piping into the harmonic filter.
12:18	OU2	GC has completed piping from the filter into the junction box. He starts to pull the wires from the junction box down into the filter.
13:02	OU2	Hinck begins to pack up tools and organize the work space. Mike with Eagle remains on site. He continues to work on programming the control panel at OU2.
15:00	Offsite	EnSafe and Eagle are both offsite. Work will resume Monday. The site is locked and secured.

CONTRACTOR PRODUCTION REPORT

LOCKHEED MARTIN – GREAT NECK, NEW YORK SITE

LM Great Neck VFD OU2 - 04/30/2021

PHOTO - OU2 Filter	PHOTO - OU2 Filter
	
Harmonic filter at OU2 now with the conduit coming out of it.	Alternate angle of filter at OU2.

END REPORT

LM Great Neck VFD OU2 - 04/30/2021

CONTRACTOR PRODUCTION REPORT

LOCKHEED MARTIN – GREAT NECK, NEW YORK SITE

LM Great Neck VFD OU2 - 05/03/2021

PROJECT			
Project Name	LM Great Neck VFD OU2	**Date**	05/03/2021
Number	0888827878	**AM Weather**	Cloudy
Superintendent	Nicholas McCarthy	**PM Weather**	Sunny
Onsite Time	07:00	**Temperature**	max: 65°F min: 50°F

Summary of Work: Pipe work continued for the harmonic filter at OU2. 95% complete. One more pipe needs wires. RW-100 testing.

Site Visitors: Wayne - PES

Changed Conditions/Delays/Conflicts Encountered

SAFETY	SHSO: Nicholas McCarthy
Was a Job Safety Meeting Held This Date?	Yes
Was an EnSafe SWAP Completed?	Yes
Was work performed involving Confined Space Entry, Excavations, Lock Out Tag Out, chemical exposures, or heights? (See SWAP for details)	Yes
Are there any lost-time accidents this date?	No

Actions & Inspection:

CONTRACTORS ONSITE

Company	Personnel	Onsite	Offsite	Duration (hrs)
Hinck	2	07:02	15:10	8
Eagle Control	1	08:25	15:10	7

EQUIPMENT ONSITE

Equipment	Safety Check	Used Hrs	Idle Hrs	Repair Hrs
Ford E super duty box truck	Hinck	8	0	0

EQUIPMENT/MATERIALS RECEIVED

Description	Lot/ID	Received By	Quantity
NA			

CONTRACTOR PRODUCTION REPORT

LOCKHEED MARTIN – GREAT NECK, NEW YORK SITE

LM Great Neck VFD OU2 - 05/03/2021

SAMPLING, TESTING & INSPECTIONS	
Description	**Company/Personnel**
RW-100/OU2 Startup and Testing	Project Team

WASTE ACCUMULATED, STOCKPILED AND TRANSPORTED OFFSITE
Description
NA

SUMMARY OF WORK ACTIVITIES		
Time	**Title**	**Notes**
07:01	OU2	Hinck's Gabe Costa (GC) and Bob Herrmann (BH) meets with EnSafe's Nick McCarthy (NPM) at OU2. NPM unlocks the gate leading to the site. We wait for Wayne with PES to arrive to unlock door to the building.
07:14	OU2	Wayne with PES arrives on site and unlocks the doors to the facility. Hinck begins to unload tools and material. Today they will drill through the brick wall that the filter is on to get to the power source on the other side.
08:28	OU2	Hinck begins drilling to get through the wall. First a pilot hole, then the final diameter hole.
09:26	OU2	Pipe work is complete on the harmonic filter at OU2. Hinck will begin landing wires with Eagle there to oversee the terminations.
10:04	OU2	Wayne comes over and tells BH that they are going to run the pump test at RW-100, even though Dave Kahn is not here today. BH agrees and heads over to RW-100 along with Mike. GC continues to land wires for the harmonic filter. Wayne is going to head over to RW-100 soon. He's waiting on John Zeta with PES to come over to RW-100. He will go down into the influent vault to take readings. NPM will be the attendee for this vault when John is down in it.
10:09	OU2	Wayne and NPM wait for John to arrive.
10:18	OU2	John Zeta arrives on site. Wayne explains the procedure to him and what John will be doing because unfamiliar with the process. NPM bump checks the 4 gas meter, readings come back normal, refer to confined space sheet for details. NPM puts the gas meters hose into the vault. Readings come back fine, John is clear to enter the vault.

11:15	RW-100	The testing begins at RW-100. Wayne is on the phone with John. John is taking flow readings while Wayne is at RW-100 changing the flow manually. BH is taking amperage readings.
11:33	RW-100	Pump testing complete. Flows and amperage were recorded. GC continues to work on pipe work for OU2's harmonic filter. Mike and BH are communication back and forth with Wayne going through their start up checklist.
13:24	OU2	GC continues to work on the harmonic filter in OU2. He is now pulling wire through the pipes he has installed. Mike and Wayne are in communication back and forth testing the remaining components in the RW-100 start up.
14:20	OU2	GC has completed piping 95% of the piping for the harmonic filter at OU2. He has to pull wires in one remaining pipe, land the wires, and the filter will be ready to be put into service. Mike continues programming to work out minor kinks. Hinck begins to pack up their tools and clean up the work area.
15:10	Offsite	Hinck, EnSafe and Eagle are offsite. Work will resume tomorrow.

PHOTO - OU2 Harmonic Filter	PHOTO - OU2 Harmonic Filter.
	
Additional pipe work complete at OU2's harmonic filter.	Alternate angle of pipe work at the filter in OU2.

PHOTO - OU2 Harmonic Filter



Opposite side of the wall where the pipes come through into the mechanical room and go into the panel.

END REPORT

LM Great Neck VFD OU2 - 05/03/2021

CONTRACTOR PRODUCTION REPORT

LOCKHEED MARTIN – GREAT NECK, NEW YORK SITE

LM Great Neck VFD OU1 - 05/04/2021

PROJECT			
Project Name	LM Great Neck VFD OU1	**Date**	05/04/2021
Number	0888827878	**AM Weather**	Cloudy
Superintendent	Nicholas McCarthy	**PM Weather**	Sunny
Onsite Time	07:00	**Temperature**	max: 65°F min: 50°F

Summary of Work: Piping at OU2's harmonic filter complete. Piping at OU1's harmonic filter started.

Site Visitors: Dave - PES
Wayne - PES
Craig Moore - CDM Smith

Changed Conditions/Delays/Conflicts Encountered

SAFETY	SHSO: Nicholas McCarthy
Was a Job Safety Meeting Held This Date?	Yes
Was an EnSafe SWAP Completed?	Yes
Was work performed involving Confined Space Entry, Excavations, Lock Out Tag Out, chemical exposures, or heights? (See SWAP for details)	Yes
Are there any lost-time accidents this date?	No

Actions & Inspection:

CONTRACTORS ONSITE

Company	Personnel	Onsite	Offsite	Duration (hrs)
Hinck	2	07:02	15:00	8

EQUIPMENT ONSITE

Equipment	Safety Check	Used Hrs	Idle Hrs	Repair Hrs
Ford E super duty box truck	Hinck	8	0	0

EQUIPMENT/MATERIALS RECEIVED

Description	Lot/ID	Received By	Quantity
NA			

CONTRACTOR PRODUCTION REPORT

LOCKHEED MARTIN – GREAT NECK, NEW YORK SITE

LM Great Neck VFD OU1 - 05/04/2021

SAMPLING, TESTING & INSPECTIONS	
Description	**Company/Personnel**
NA	

WASTE ACCUMULATED, STOCKPILED AND TRANSPORTED OFFSITE
Description
NA

SUMMARY OF WORK ACTIVITIES		
Time	**Title**	**Notes**
07:06	OU1	Hinck's Bob Herrmann (BH) and Gabe Costa (GC) meet EnSafe's Nick McCarthy (NPM) at OU1. We will both drive over to OU2.
07:18	OU2	NPM unlocks gate at OU2 and we drive up to building. Dave with PES pulls in behind us. Hinck will finish the piping the harmonic filter and landing wires.
07:35	OU2	Hinck is get the working on getting power to the harmonic filter. They will run a wire from the power source to the panel and land the wires. Craig Moore with CDM Smith is on site to observe some work take place.
08:41	OU2	BH needs to get in contact with representative from the harmonic filter company is continue the install. He runs into the issue of having left over pieces and not knowing what they do. While he does that, GC will begin work on the harmonic filter piping at OU1.
09:43	OU1	EnSafe and Hinck head over to OU1.
09:47	OU1	BH and GC talk about the piping route they will take and what needs to be done.
10:39	OU1	BH heads back to OU2 to get in the phone with a harmonic filter representative to see what he needs to do. GC continues working on pipe work for OU1 filter.
12:12	OU1	BH returns to OU1. GC is having trouble drilling holes for the conduit to get though the wall. He is hitting a lot of rebar.
12:43	OU1	GC has got the holes drilled. He now transitions to pipe work.
13:41	OU2	BH and GC mount the breaker into the power source within the building at OU1. The breaker will feed the harmonic filter. BH wears arc flash gear to put the breaker in.

14:23	OU2	Hinck begins to clean up tools and debris around the job site. Work will continue at OU1 tomorrow.
15:01	OU1	Both EnSafe and Hinck are offsite.

PHOTO - OU1 Harmonic Filter



New breaker shelf installed at OU1.

CONTRACTOR PRODUCTION REPORT

LOCKHEED MARTIN – GREAT NECK, NEW YORK SITE

LM Great Neck VFD OU1 - 05/04/2021

PHOTO - OU1 Harmonic Filter	PHOTO - Inside OU1.
	
Three holes drilled. And the elbows put in place.	Conduit installed and coming into OU1.

PHOTO - OU1 Harmonic Filter



A stick of pipe added to the elbows.

END REPORT

LM Great Neck VFD OU1 - 05/04/2021

CONTRACTOR PRODUCTION REPORT

LOCKHEED MARTIN – GREAT NECK, NEW YORK SITE

LM Great Neck VFD OU1 - 05/05/2021

PROJECT			
Project Name	LM Great Neck VFD OU1	**Date**	05/05/2021
Number	0888827878	**AM Weather**	Cloudy
Superintendent	Nicholas McCarthy	**PM Weather**	Rain
Onsite Time	07:00	**Temperature**	max: 50°F min: 40°F
Summary of Work: Pipe work continued at OU1.			
Site Visitors: Dave - PES Wayne - PES			

Changed Conditions/Delays/Conflicts Encountered

SAFETY	SHSO: Nicholas McCarthy
Was a Job Safety Meeting Held This Date?	Yes
Was an EnSafe SWAP Completed?	Yes
Was work performed involving Confined Space Entry, Excavations, Lock Out Tag Out, chemical exposures, or heights? (See SWAP for details)	Yes
Are there any lost-time accidents this date?	No
Actions & Inspection:	

CONTRACTORS ONSITE

Company	Personnel	Onsite	Offsite	Duration (hrs)
Hinck	2	07:04	15:19	8
Eagle Control	2	08:32	15:15	7

EQUIPMENT ONSITE

Equipment	Safety Check	Used Hrs	Idle Hrs	Repair Hrs
Ford E super duty box truck	Hinck	8	0	0

EQUIPMENT/MATERIALS RECEIVED

Description	Lot/ID	Received By	Quantity
NA			

CONTRACTOR PRODUCTION REPORT

LOCKHEED MARTIN – GREAT NECK, NEW YORK SITE

LM Great Neck VFD OU1 - 05/05/2021

SAMPLING, TESTING & INSPECTIONS	
Description	**Company/Personnel**
NA	

WASTE ACCUMULATED, STOCKPILED AND TRANSPORTED OFFSITE
Description
NA

SUMMARY OF WORK ACTIVITIES		
Time	**Title**	**Notes**
07:01	OU1	Hinck's Bob Herrmann (BH) and Gabe Costa (GC) meet with EnSafe's Nick McCarthy (NPM) at OU1. Hinck will start the day at OU1 continuing the pipe work for the harmonic filter.
08:21	Eagle on site	Eagle's Paul Lanzilotta (PL) and Mike Hagan (MH) are on site and will be working on trouble shooting the minor issues they have been having between RW-100 and OU2. Hinck is unloading tools and material. GC has begun pipe work.
10:12	OU1	Hinck continues pipe work inside OU1. Rain is starting to come down pretty hard.
10:44	RW-1RS	NPM heads over to watch over Mike from Eagle as he's down in the vault. Dave has a 4 gas meter in the vault prior to NPMs arrival. Paul explains to NPM that they are 95% complete between all vaults. They are swapping out some communication devices that have been giving them problems in Rw-1RS.
11:15	RW-1RS	Eagle finishing swapping a communication device at RW-1RS. They will be heading to OU1 to continue working out kinks in the system. BH comes to RW-1RS to check out the flickering light issue.
12:13	OU1	Hinck has completed checking out the flickering light issue. Wayne thought it was related to stray voltage issue, but after Hinck troubleshooting, BH determined that all the vaults are getting the same amount of power and that didn't seem to be the issue. GC continues pipe work. He's piping to the panel from where the pipe comes through the wall. Mike is continuing troubleshooting low voltage issues. BH, NPM and Wayne he's back to OU1.
12:08	OU1	Mike is continuing to troubleshoot issues at the control panel at OU1. GC works on piping.

14:18	OU1	Hinck begins to take pack up tools and clean up the job site. Refer to photos for work progress.
15:07	Offsite	Hinck, EnSafe and Eagle are offsite. Work will resume tomorrow at OU1.

PHOTO - OU1 Harmonic Filter .	PHOTO - OU1 Harmonic Filter
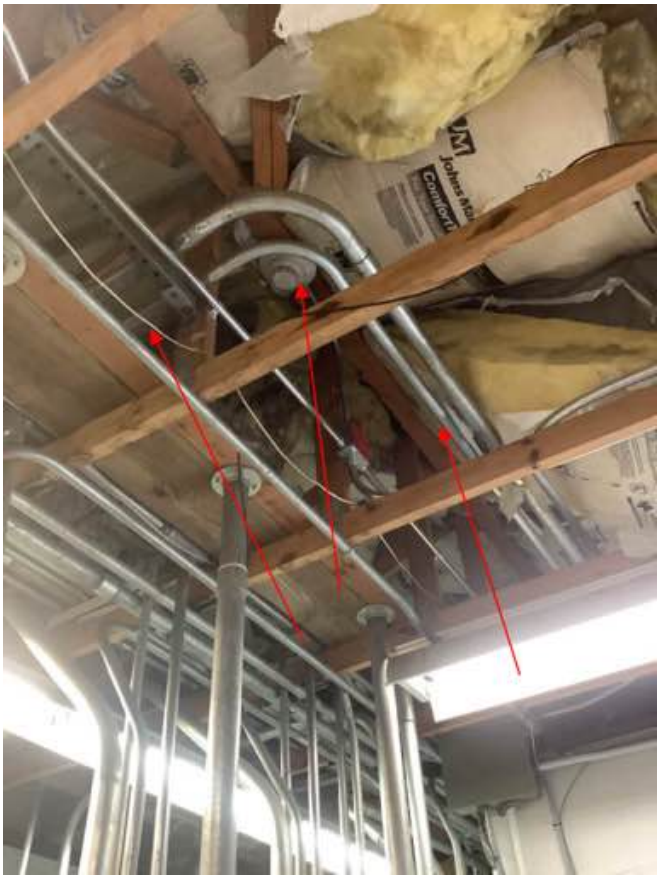	
Pipe work for harmonic filter at OU1.	Pipe work for the harmonic filter at OU1.

END REPORT

LM Great Neck VFD OU1 - 05/05/2021

CONTRACTOR PRODUCTION REPORT

LOCKHEED MARTIN – GREAT NECK, NEW YORK SITE

LM Great Neck VFD OU1/OU2 - 05/06/2021

PROJECT			
Project Name	LM Great Neck VFD OU1/OU2	**Date**	05/06/2021
Number	0888827878	**AM Weather**	Sun
Superintendent	Nicholas McCarthy	**PM Weather**	Sun
Onsite Time	07:01	**Temperature**	max: 60°F min: 40°F

Summary of Work: Piping from Harmonic filter into OU1 completed. Power feeds pulled in both OU1 and OU2. Wires terminated on both ends at OU1 and OU2. Filter at OU2 ready for representative. Work continued on OU1 tomorrow.

Site Visitors: Craig Moore - CDM Smith.
Tom Whitaker - AMEC

Changed Conditions/Delays/Conflicts Encountered

SAFETY	SHSO: Nicholas McCarthy
Was a Job Safety Meeting Held This Date?	Yes
Was an EnSafe SWAP Completed?	Yes
Was work performed involving Confined Space Entry, Excavations, Lock Out Tag Out, chemical exposures, or heights? (See SWAP for details)	Yes
Are there any lost-time accidents this date?	No

Actions & Inspection:

CONTRACTORS ONSITE

Company	Personnel	Onsite	Offsite	Duration (hrs)
Hinck	2	07:01	15:09	8

EQUIPMENT ONSITE

Equipment	Safety Check	Used Hrs	Idle Hrs	Repair Hrs
Ford E super duty box truck	Hinck	8	0	0

EQUIPMENT/MATERIALS RECEIVED

Description	Lot/ID	Received By	Quantity
NA			

CONTRACTOR PRODUCTION REPORT

LOCKHEED MARTIN – GREAT NECK, NEW YORK SITE

LM Great Neck VFD OU1/OU2 - 05/06/2021

SAMPLING, TESTING & INSPECTIONS	
Description	**Company/Personnel**
NA	

WASTE ACCUMULATED, STOCKPILED AND TRANSPORTED OFFSITE
Description
NA

SUMMARY OF WORK ACTIVITIES		
Time	**Title**	**Notes**
07:06	OU1	Hinck's Bob Herrmann (BH) and Gabe Costa (GC) meet with EnSafe's Nick McCarthy (NPM) at OU1. Wayne with PES is here when we arrive. NPM conducts a safety meeting, Hinck begins to unload tooling to continue the pipe work on OU1's harmonic filter.
08:07	OU1	BH informs NPM the representative for the harmonic filter will be on site on Monday to help get the harmonic filter into service.
09:09	OU1	Pipe work continues.
10:43	OU2	Pipe work complete at OU1, Hinck will now take a trip over to OU2 to run the wire that will feed power to the harmonic filter. Tom Whitaker with Wood is on site at OU2.
12:25	OU1	Hinck has completed pulling wire at OU2. All they need to do is install the breaker and it will be ready for the filter rep to come out and put it into service. Hinck, EnSafe and Wood all head back to OU1 to pull the power feed wires through the pipes there.
12:47	OU1	Power feeder wire has been pulled through at OU1. GC begins to terminate the wires within the Filter. BH terminates the wire on the breakers end.
14:00	OU1	BH has completed terminating the wires to the breaker. GC has also finished terminating his end to the filter.
14:29	OU1	Hinck begins to pack up their tools and organize the job site. Wire pulling will continue tomorrow at OU1.
14:40	Offsite	Hinck and EnSafe are offsite. Wayne with PES remains onsite.

PHOTO - OU1 Harmonic filter	PHOTO - OU1 Harmonic Filter
	
The feeder wires come though the elbow, run down the wall (blue arrow) and tie into the breaker (Red box). The system is locked out by Hinck's lock.	Final section of tubing added and fixed to the harmonic filters panel. The feeder wires were pulled though the large diameter pipe. The other two pipes still need wires.

END REPORT

LM Great Neck VFD OU1/OU2 - 05/06/2021

CONTRACTOR PRODUCTION REPORT

LOCKHEED MARTIN – GREAT NECK, NEW YORK SITE

LM Great Neck VFD OU1/OU2 - 05/07/2021

PROJECT			
Project Name	LM Great Neck VFD OU1/OU2	**Date**	05/07/2021
Number	0888827878	**AM Weather**	Sun
Superintendent	Nicholas McCarthy	**PM Weather**	Sun
Onsite Time	07:00	**Temperature**	max: 60°F min: 40°F

Summary of Work: Wire pulled at OU1 for the harmonic filter. Hydraulic cement pressed into previous anchor holes and voids at RW-100. Mike troubleshoots communication issues in the Eagle panel at RW-100/OU2.

Site Visitors: Dave - PES

Changed Conditions/Delays/Conflicts Encountered

SAFETY	SHSO: Nicholas McCarthy
Was a Job Safety Meeting Held This Date?	Yes
Was an EnSafe SWAP Completed?	Yes
Was work performed involving Confined Space Entry, Excavations, Lock Out Tag Out, chemical exposures, or heights? (See SWAP for details)	Yes
Are there any lost-time accidents this date?	No

Actions & Inspection:

CONTRACTORS ONSITE

Company	Personnel	Onsite	Offsite	Duration (hrs)
Hinck	2	07:01	15:00	8
Eagle Control	1	07:01	15:03	8

EQUIPMENT ONSITE

Equipment	Safety Check	Used Hrs	Idle Hrs	Repair Hrs
Ford E Super Duty box truck	Hinck	8	0	0

EQUIPMENT/MATERIALS RECEIVED

Description	Lot/ID	Received By	Quantity
NA			

CONTRACTOR PRODUCTION REPORT

LOCKHEED MARTIN – GREAT NECK, NEW YORK SITE

LM Great Neck VFD OU1/OU2 - 05/07/2021

SAMPLING, TESTING & INSPECTIONS	
Description	**Company/Personnel**
NA	

WASTE ACCUMULATED, STOCKPILED AND TRANSPORTED OFFSITE
Description
NA

SUMMARY OF WORK ACTIVITIES		
Time	**Title**	**Notes**
07:01	OU1	Hinck's Bob Herrmann (BH) and Gabe Costa (GC) meet with EnSafe's Nick McCarthy (NPM) at OU1. Mike Hagan with Eagle is also on site. Along with Dave Kahn with PES.
07:37	OU1	Hinck begins to work on pulling a collection of wires from the harmonic filter into OU1. Mike continues troubleshooting from a few days ago to work out the small kinks.
08:18	RW-100	Hinck completed pulling the wires that they needed to. Hinck, Eagle and EnSafe will all head over to RW-100. Hinck will be plugging up holes from previous anchors and voids with hydraulic cement. Mike will be troubleshooting some communication issues. NPM bump checks the 4 gas meter. The results come back normal. Check confined space form for details. NPM puts the 4 gas meter hose down into the vault. Readings come back normal. EnSafe gives Hinck clearance to begin work.
09:48	Shutdown	OU2 gets shut down so Mike can work on what he needs to do. GC heads down into the vault it's the cement. Dave confirms with Mike that OU2 is safe to shut down and is locked out. There's no power going to the vault.
11:02	RW-100	Cement work and communication trouble shooting continue.
12:20	RW-100	Cement work and troubleshooting complete in RW-100. EnSafe, Hinck and Eagle head to OU2 to continue cement work and Mike will troubleshoot.
12:34	OU2	GC cements around the pipes that are coming out of the harmonic filter and going through the wall to the power panel.
13:27		GC has finished cementing around the pipe work. Refer to the photos for the finished product. Mike continues to troubleshoot minor issues in the control panel.

14:18	OU2	Hinck is offsite. They will be back Monday to meet up with the harmonic filter representative. Mike heads to OU1 to continue his troubleshooting.
15:05	Offsite	EnSafe and Eagle are offsite.

PHOTO - SSDS	PHOTO - SSDS
	
Flex pipe in the waste box at SSDS building.	Plastic that was left at DW-15 after the drill rig got picked up from the site.

PHOTO - OU2	PHOTO - OU2
	
Pipes coming out of harmonic filter that GC has cemented.	Opposite side of the all from previous photo.

END REPORT

LM Great Neck VFD OU1/OU2 - 05/07/2021

CONTRACTOR PRODUCTION REPORT

LOCKHEED MARTIN – GREAT NECK, NEW YORK SITE

LM Great Neck VFD OU1 - 05/10/2021

PROJECT			
Project Name	LM Great Neck VFD OU1/OU2	**Date**	05/10/2021
Number	0888827878	**AM Weather**	Cloudy
Superintendent	Nicholas McCarthy	**PM Weather**	Sun
Onsite Time	07:00	**Temperature**	max: 60°F min: 40°F

Summary of Work: Control panel heaters installed in RW-1RS, RW-1RD and EW-1. Cement patch work in all three as well. Cement patch work at OU1.

Site Visitors: Tom Whitaker - AMEC

Changed Conditions/Delays/Conflicts Encountered

SAFETY	SHSO: Nicholas McCarthy
Was a Job Safety Meeting Held This Date?	Yes
Was an EnSafe SWAP Completed?	Yes
Was work performed involving Confined Space Entry, Excavations, Lock Out Tag Out, chemical exposures, or heights? (See SWAP for details)	Yes
Are there any lost-time accidents this date?	No

Actions & Inspection:

CONTRACTORS ONSITE

Company	Personnel	Onsite	Offsite	Duration (hrs)
Hinck	2	07:04	15:01	8

EQUIPMENT ONSITE

Equipment	Safety Check	Used Hrs	Idle Hrs	Repair Hrs
Ford E super duty box truck	Hinck	8	0	0

EQUIPMENT/MATERIALS RECEIVED

Description	Lot/ID	Received By	Quantity
NA			

CONTRACTOR PRODUCTION REPORT

LOCKHEED MARTIN – GREAT NECK, NEW YORK SITE

LM Great Neck VFD OU1 - 05/10/2021

SAMPLING, TESTING & INSPECTIONS	
Description	**Company/Personnel**
NA	

WASTE ACCUMULATED, STOCKPILED AND TRANSPORTED OFFSITE
Description
NA

SUMMARY OF WORK ACTIVITIES		
Time	**Title**	**Notes**
07:01	RW-1RS	EnSafe's Nick McCarthy (NPM) meets up with Hinck's Bob Herrmann (BH) and Gabe Costa (GC) at RW-1RD. Hinck will be installing the last minor things in the vault. NPM conducts a safety meeting. He then opens to the vault to let ventilate. NPM calibrates the 4 gas meter. Results come back normal, he then puts the gas meters hose down into the vault, the meters readings come back normal. See confined space form for details.
07:41	RW-1RD	GC has completed installing a heater for the controls panel in RW-1RD. It will control humidity within the control panel to stop corrosion. GC moves over to RW-1RS to install another heater.
08:29	RW-1RS	GC completes the installation of RW-1RS's heater. He transitions back to RW-1RD to fill all voids in the concrete with hydraulic cement.
09:15	RW-1RD	GC has completed work with the hydraulic cement truck is RW-1RD. He will transition to cement work in RW-1RS.
09:44	OU2	BH is at OU2 with the harmonic filter representative. He informs me the tech will be there until 12 this afternoon. BH says the tech says everything is going smooth so far.
10:30	EW-1	GC has completed install the control panel heaters and doing cement work in RW-1RS and RW-1RD. NPM and GC now transition to EW-1 to finish the odds and ends that are left.
11:37	EW-1	GC completes the check list left at EW-1. We transition back to OU1 to finish up the cement patch work that's left.
12:07	OU1	GC begins to patch the holes from the drilling for the harmonic filter. BH informs NPM that we they do not have a key component in setting up the harmonic filter. They are missing a terminal block for the CTE. Once that comes in, Hinck will be back. Dave with have to shut OU1 down for an hour. After that,

		the representative for the filter can come out and set up the filter.
13:23	OU1	GC finishes patch work at OU1. Hinck begins to demobilize.
13:50	OU1	Hinck and EnSafe are both offsite. Work will resume next Monday at OU1.

PHOTO - Heating RW-1RS	PHOTO - RW-1RS
	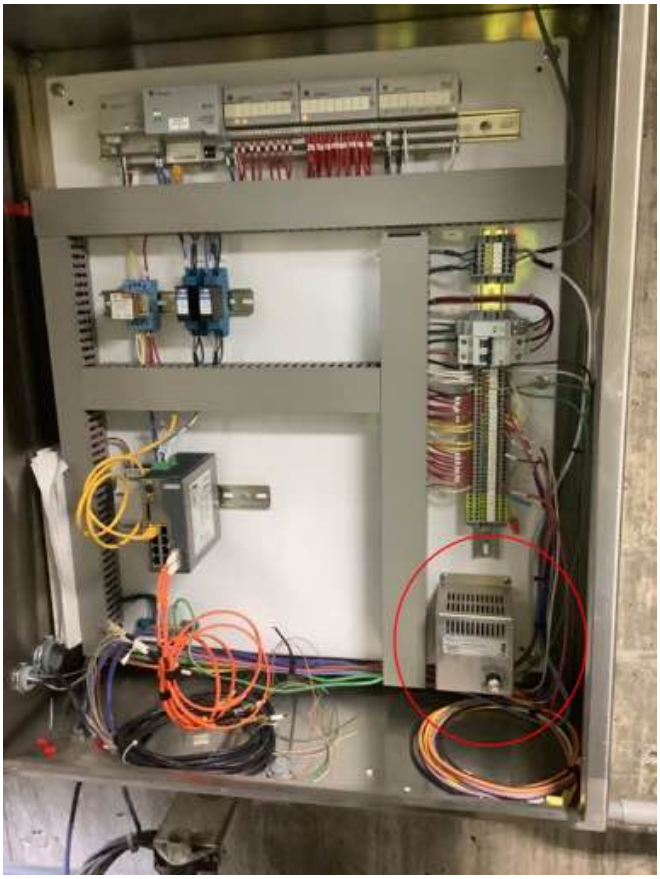
Heating unit installed at RW-1RS.	Alternate angle of heating unit. Circled in red.

PHOTO - RW-1RS	PHOTO - RW-1RS
	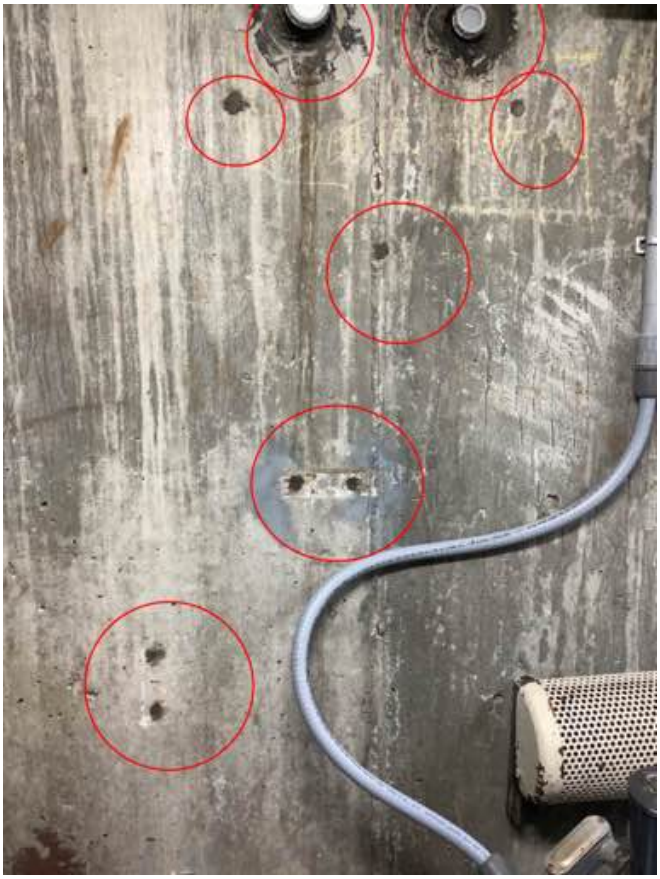
Hydraulic cement patch work in RW-1RS.	Patchwork continued.

PHOTO - OU2



Hydraulic cement patch work at OU1's harmonic filter.

END REPORT

LM Greatneck VFD OU1/OU2 - 05/10/2021

CONTRACTOR PRODUCTION REPORT

LOCKHEED MARTIN – GREAT NECK, NEW YORK SITE

LM Great Neck VFD OU1 - 05/17/2021

PROJECT			
Project Name	LM Great Neck VFD OU1	**Date**	05/17/2021
Number	0888827878	**AM Weather**	Sun
Superintendent	Nicholas McCarthy	**PM Weather**	Sun
Onsite Time	07:00	**Temperature**	max: 60°F min: 40°F
Summary of Work: OU1 shutdown. CTE installed. OU1 restarted.			
Site Visitors:			

Changed Conditions/Delays/Conflicts Encountered

SAFETY	SHSO: Nicholas McCarthy
Was a Job Safety Meeting Held This Date?	Yes
Was an EnSafe SWAP Completed?	Yes
Was work performed involving Confined Space Entry, Excavations, Lock Out Tag Out, chemical exposures, or heights? (See SWAP for details)	Yes
Are there any lost-time accidents this date?	No
Actions & Inspection:	

CONTRACTORS ONSITE

Company	Personnel	Onsite	Offsite	Duration (hrs)
Hinck	2	07:00	11:00	4

EQUIPMENT ONSITE

Equipment	Safety Check	Used Hrs	Idle Hrs	Repair Hrs
Ford E super duty box truck	Hinck	4	0	0

EQUIPMENT/MATERIALS RECEIVED

Description	Lot/ID	Received By	Quantity
NA			

CONTRACTOR PRODUCTION REPORT

LOCKHEED MARTIN – GREAT NECK, NEW YORK SITE

LM Great Neck VFD OU1 - 05/17/2021

SAMPLING, TESTING & INSPECTIONS	
Description	**Company/Personnel**
NA	

WASTE ACCUMULATED, STOCKPILED AND TRANSPORTED OFFSITE
Description
NA

SUMMARY OF WORK ACTIVITIES		
Time	**Title**	**Notes**
07:03	OU1	Hinck's Bob Herrmann (BH) and Gabe Costa (GC) meet with EnSafe's (NPM) at OU1. NPM conducts safety meeting. Hinck will be installing the CTE for OU1's harmonic filter. Dave with PES will shut down OU1, BH will install the CTE and OU1 will be restarted.
07:45	OU1	Dave with PES is on site. He unlocks the building, Hinck begins to bring tools into OU1.
08:00	OU1	Hinck begins to get prep work done in order to install the CTE quickly.
08:42	OU1	Hinck's prep work is complete. BH lets Dave know that he is ready for OU1's shutdown.
08:56	OU1 shutdown	OU1 is shut down and the breaker is locked out and tagged. Hinck begins to install the CTE.
09:48	OU1	CTE is complete. Hinck begins to demobilize.
11:30	Offsite	Hinck and EnSafe are both offsite. NPM heads over to DW-15 to grab photos for Rob McCarthy.

END REPORT

LM Great Neck VFD OU1 - 05/17/2021

CONTRACTOR PRODUCTION REPORT

LOCKHEED MARTIN – GREAT NECK, NEW YORK SITE

LM Great Neck VFD OU1 - 05/19/2021

PROJECT			
Project Name	LM Great Neck VFD OU1	**Date**	05/19/2021
Number	0888827878	**AM Weather**	Sun
Superintendent	Nicholas McCarthy	**PM Weather**	Sun
Onsite Time	07:00	**Temperature**	max: 80°F min: 60°F
Summary of Work: OU1 filter commissioned			
Site Visitors: Tom Whitaker - AMEC			
Changed Conditions/Delays/Conflicts Encountered			

SAFETY	SHSO: Nicholas McCarthy
Was a Job Safety Meeting Held This Date?	Yes
Was an EnSafe SWAP Completed?	Yes
Was work performed involving Confined Space Entry, Excavations, Lock Out Tag Out, chemical exposures, or heights? (See SWAP for details)	Yes
Are there any lost-time accidents this date?	No
Actions & Inspection:	

CONTRACTORS ONSITE

Company	Personnel	Onsite	Offsite	Duration (hrs)
Hinck	1	08:20	13:47	6
Eagle Control	1	08:20	13:47	6

EQUIPMENT ONSITE

Equipment	Safety Check	Used Hrs	Idle Hrs	Repair Hrs
NA		0	0	0

EQUIPMENT/MATERIALS RECEIVED

Description	Lot/ID	Received By	Quantity
NA			

CONTRACTOR PRODUCTION REPORT

LOCKHEED MARTIN – GREAT NECK, NEW YORK SITE

LM Great Neck VFD OU1 - 05/19/2021

SAMPLING, TESTING & INSPECTIONS	
Description	**Company/Personnel**
NA	

WASTE ACCUMULATED, STOCKPILED AND TRANSPORTED OFFSITE
Description
NA

SUMMARY OF WORK ACTIVITIES		
Time	**Title**	**Notes**
07:00	OU1	Nick McCarthy with EnSafe is on site at OU1.
08:21	OU1	Mike Hagan with Eagle is on site at OU1 along with Dario Morales with Great Rock Automation. Dario will be servicing the filter to get it into service. Mike will be terminating some wires to get the filter to show up on Dave's computer. Mike will also be checking communication between the filter and SCADA readout in the SSDS building.
08:24	OU1	Dario heads into OU1 to start the process of servicing the harmonic filter. Bob Herrmann with Hinck is on site.
09:22	OU1	Tom Whitaker with Wood in on site to oversee the filter get put into service.
11:36	OU1	The harmonic filter is up and running. Dario confirms that it is running fine. He went through multiple pages for his. Check list and start up procedure. Mike also confirms everything is running smooth on his end. Bob will be heading over to OU2 soon to change out a bad breaker in the panel.
12:09	RW-100	OU1 Harmonic filter complete. Hinck and Eagle head over to RW-100. Hinck will be replacing a breaker that they believe has gone bad. Dario heads off site.
12:40	RW-100	A new 20-amp breaker installed at RW-100. Bob and Tom are going through different start up procedures to see what trips it or not.
13:11	RW-100	Hinck is going to have to order a new breaker because the one that they currently have keeps tripping. They will order the new breaker and come back to the site once it comes in to install it.
13:15	Offsite	Hinck, EnSafe and Wood are offsite.

PHOTO - OU1	PHOTO - OU1
	
Hinck's locked out breaker for the harmonic filter at OU1.	Harmonic filter has been started and brought into service.

PHOTO - OU1



Harmonic filters screen.

PHOTO - RW-1RD



deltas equipment setup at RW-1RD.

PHOTO - RW-1RD



More equipment setup at RW-1RD.

END REPORT

LM Great Neck VFD OU1 - 05/19/2021

CONTRACTOR PRODUCTION REPORT

LOCKHEED MARTIN – GREAT NECK, NEW YORK SITE

LM Great Neck VFD – 06/03/2021

PROJECT			
Project Name	LM Great Neck VFD	**Date**	06/03/2021
Number	0888827878	**AM Weather**	Sunny cool
Superintendent	Rob McCarthy	**PM Weather**	
Onsite Time	07:00	**Temperature**	max: 75°F min: 65°F
Summary of Work: Substantial Completion Inspection			
Site Visitors: Wood – Bob Maple, Tom Whitacre			
Changed Conditions/Delays/Conflicts Encountered			

SAFETY	SHSO: Rob McCarthy
Was a Job Safety Meeting Held This Date?	Yes
Was an EnSafe SWAP Completed?	Yes
Was work performed involving Confined Space Entry, Excavations, Lock Out Tag Out, chemical exposures, or heights?	Yes
Are there any lost-time accidents this date?	No
Actions & Inspection: Substantial Completion Inspection	

CONTRACTORS ONSITE

Company	Personnel	Onsite	Offsite	Duration (hrs)
Hinck	1	07:30	12:00	4.5
Eagle	1	07:30	12:00	4.5

EQUIPMENT ONSITE

Equipment	Safety Check	Used Hrs	Idle Hrs	Repair Hrs
NA				

EQUIPMENT/MATERIALS RECEIVED

Description	Lot/ID	Received By	Quantity
NA			

CONTRACTOR PRODUCTION REPORT

LOCKHEED MARTIN – GREAT NECK, NEW YORK SITE

LM Great Neck VFD – 06/03/2021

SAMPLING, TESTING & INSPECTIONS	
Description	**Company/Personnel**
NA	

WASTE ACCUMULATED, STOCKPILED AND TRANSPORTED OFFSITE
Description
NA

SUMMARY OF WORK ACTIVITIES		
Time	**Title**	**Notes**
07:00	RM and others onsite	Wood – Bob Maple and Tom Whitacre, Wayne (system operator) w/ PES provided access 7:30 Eagle – Mike, and Hinck – Bob
07:45		Start at OU1 building / Active Harmonic Filter overview, operation, panel
08:00	Inspect EW-1R, RW-1D, RW-1RS	Wayne provided access to vaults and buildings and utilized the PES meter to confirm O2 levels for vault entry Bob Maple, Tom Whitacre, and Rob McCarthy entered each vault for inspection and photographs <u>EW-1R</u> • Pump is down (not related to electrical project) • Entered vault and reviewed electrical construction <u>RW-1RD</u> Items for punchlist/follow up • Ground appears not connected • Black coating for conduit/thread <u>RW-1RS -</u> Delta working at vault – pump and pipe removed Items for punchlist/follow up • Black coating for conduit/thread • Ground not connected • 1 light bulb is not working Further punch list will be provided by Wood
09:00	Inspect RW-100	Reviewed new aboveground panels at RW100, opened vault doors to inspect connections and equipment inside vault. Further punch list will be provided by Wood / Bob Maple

10:00	OU2 Building	Active Harmonic Filter overview, SCADA, programming, system operation; Mike and Bob Maple review screens and controls
11:00	OU1 Building	Review SCADA / programming, system operation and controls RM and Hinck pick up poly sheeting and remove wood packing materials from OU1 waste storage area; materials and sheeting disposed as general refuse.
12:00	Offsite	

PHOTO -
See Appendix F from the Construction Completion Report for photos taken during the Substantial Completion inspection.

END REPORT

LM Great Neck VFD – 06/03/2021

CONTRACTOR PRODUCTION REPORT

LOCKHEED MARTIN – GREAT NECK, NEW YORK SITE

LM Great Neck VFD - 06/14/2021

PROJECT			
Project Name	LM Great Neck VFD	**Date**	06/14/2021
Number	0888827878	**AM Weather**	Cloudy
Superintendent	Marshall Gibson	**PM Weather**	P. Cloudy
Onsite Time	07:00	**Temperature**	max: 75°F min: 65°F
Summary of Work: Excavate for new stairs at OU2 treatment building			
Site Visitors: Jim Wilkinson - EnviroTrac			

Changed Conditions/Delays/Conflicts Encountered

SAFETY	SHSO: Marshall Gibson
Was a Job Safety Meeting Held This Date?	Yes
Was an EnSafe SWAP Completed?	Yes
Was work performed involving Confined Space Entry, Excavations, Lock Out Tag Out, chemical exposures, or heights? (See SWAP for details)	No
Are there any lost-time accidents this date?	No
Actions & Inspection:	

CONTRACTORS ONSITE

Company	Personnel	Onsite	Offsite	Duration (hrs)
EnviroTrac	3	07:00	14:00	7

EQUIPMENT ONSITE

Equipment	Safety Check	Used Hrs	Idle Hrs	Repair Hrs
Wacker-Neuson 1550 plate compactor	EnviroTrac	0	0	0
Stihl TS500i saw (for asphalt)	EnviroTrac	0	0	0

EQUIPMENT/MATERIALS RECEIVED

Description	Lot/ID	Received By	Quantity
3/4” gravel - 50 lb bags			40
Asphalt cold patch 60lb bag			2

XPS insulation 4’x8’x2”	2
Wire fabric 4’x6’	2
2”x12”x12’	2

SAMPLING, TESTING & INSPECTIONS

Description	Company/Personnel
NA	

WASTE ACCUMULATED, STOCKPILED AND TRANSPORTED OFFSITE

Description
NA

SUMMARY OF WORK ACTIVITIES

Time	Title	Notes
07:00	Mobilization	MBG on-site at OU2 treatment building, waiting on EnviroTrac to arrive.
07:30	Mobilization	EnviroTrac on-site, had been waiting for me at OU1. Mike Alliegro - foreman Ken Davies - assistant Steve Smith - labor Waiting on PES for access to OU2.
07:40	Mobilization	PES on-site provides access to OU2 Conduct H&S meeting with EnviroTrac
08:39	Stair layout	Assemble/layout stairs. Based on design sketch by EnviroTrac, end of stairs (step-side) is adjacent to a water valve box. In addition, discover an electrical junction box in depression adjacent to water valve. This electrical box was covered with silt, is in a depression, and was likely not visible during initial inspection back in April. Work with EnviroTrac team and come up with plausible solution. Waiting on Jim Wilkinson with EnviroTrac to arrive to further evaluate solution.

09:15	Stair layout	Jim Wilkinson with EnviroTrac on-site. Go over layout/options and best approach appears to be to rotate stairs 180 degrees so that they steps protrude past the right hand side of vault. Mark out location of asphalt cut - MBG takes photos and send to RM to discuss change. RM traveling says he will call back once at office to discuss - approximately 20 minutes. Mike and Ken offsite to get supplies for concrete form and frost-free fill.
10:15	Stair layout	Receive call from RM to discuss stair layout change. Ultimately decided that proposed new layout of rotating stair system 180 degrees is best approach. Concrete pad will be approximately 8.5” above grade so that landing is flush with top of vault. RM also suggests adding bollards at corners of pad. Rotating stairs will cause both sides of stairs to be “open”. Current system only has railing on one side - EnviroTrac to get railing for other side. Dave Kahn with PES on-site. Review stair layout with him and he has no further comments/suggestions.
10:20	Asphalt removal	Steve and Jim begin saw-cutting asphalt for removal
11:00	Asphalt removal	Asphalt removal going slow - asphalt is approximately 5-inches thick Mike and Ken back onsite. Jim offsite
12:30	Asphalt removal	Asphalt removal complete. Removed pieces of asphalt loaded into EnviroTrac trucks for disposal at their facility as solid waste. Crew breaks for lunch
12:30	Stairs layout	Received a call from RM and he stated that he had heard from AMEC on changes to layout and their only comment was to ensure concrete started at a depth of no less than 10” below grade. Due this change, EnviroTrac believes a concrete delivery, rather than hand-mix, is preferred. RM agrees. RM and I discuss backfill and if 6” base necessary. I tell RM that fill material under asphalt is similar to a bank-run gravel. RM

		states that if that material is consistent to depth (12”), acceptable to not add the 6” base specified in the drawings. OK to just compact, then lay XPS Styrofoam insulation in excavation.
13:00	Soil removal	Crew begins removing soil from area of concrete pad. Soil is placed into a depression in a grassy area adjacent to the driveway. Crew will need to excavate to 12” below grade to account for 2” of insulation board
13:35	Compaction	Soil removal complete to 12” below grade. Run plate compactor over base of excavation and install XPS insulation.
14:00	Demobilization	EnviroTrac secures site - offsite. Wayne with PES on-site, he secures building/gate. MBG offsite to DW15 to inspect drum storage
14:10	Drum Inspection	MBG at DW15. Soil drum storage area OK. Water drum storage area OK. Inspect soil roll-off and top secure. Remove cover at downslope corner and note approximately 4-inches water at this end. Likely will require solidification prior to offsite transport. Resecure top.
15:00	Demobilization	MBG offsite

PHOTO - Pre-excavation	PHOTO - Pre-excavation
	

PHOTO - Pre-excavation	PHOTO - Pre-excavation
	

PHOTO - End of day	PHOTO - End of day
	

END REPORT

LM Great Neck VFD - 06/14/2021

CONTRACTOR PRODUCTION REPORT

LOCKHEED MARTIN – GREAT NECK, NEW YORK SITE

LM Great Neck VFD - 06/15/2021

PROJECT			
Project Name	LM Great Neck VFD	**Date**	06/15/2021
Number	0888827878	**AM Weather**	Cloudy
Superintendent	Marshall Gibson	**PM Weather**	P. Cloudy
Onsite Time	07:00	**Temperature**	max: 75°F min: 65°F
Summary of Work: Prep concrete pour for pad for stairs			
Site Visitors:			

Changed Conditions/Delays/Conflicts Encountered

SAFETY	SHSO: Marshall Gibson
Was a Job Safety Meeting Held This Date?	Yes
Was an EnSafe SWAP Completed?	Yes
Was work performed involving Confined Space Entry, Excavations, Lock Out Tag Out, chemical exposures, or heights? (See SWAP for details)	No
Are there any lost-time accidents this date?	No
Actions & Inspection:	

CONTRACTORS ONSITE

Company	Personnel	Onsite	Offsite	Duration (hrs)
EnviroTrac	3	07:00	13:30	7

EQUIPMENT ONSITE

Equipment	Safety Check	Used Hrs	Idle Hrs	Repair Hrs
Core-drill	EnviroTrac	6	0	0

EQUIPMENT/MATERIALS RECEIVED

Description	Lot/ID	Received By	Quantity
NA			

CONTRACTOR PRODUCTION REPORT

LOCKHEED MARTIN – GREAT NECK, NEW YORK SITE

LM Great Neck VFD - 06/15/2021

SAMPLING, TESTING & INSPECTIONS	
Description	**Company/Personnel**
NA	

WASTE ACCUMULATED, STOCKPILED AND TRANSPORTED OFFSITE
Description
NA

SUMMARY OF WORK ACTIVITIES		
Time	**Title**	**Notes**
07:00	Mobilization	MBG on-site at OU2 treatment building Wayne with PES on-site, unlocks gate/building. Discuss how to manage work flow once I leave for day and Wayne asks EnviroTrac close building door and OK to dummy-lock gate. He will be back at end-of-day to ensure everything secured. EnviroTrac on-site Ken Davies- Foreman Steve Smith - Assistant Casey Byran - Laborer Conduct H&S meeting
07:15	Form work	EnviroTrac working on completing form for concrete pour. KD indicates concrete delivery still scheduled for 1000. Depending on how day goes, EnviroTrac may cut asphalt for bollards.
08:29	Utility markout	Premier Infrastructure and Utilities on-site to verify location of gas line. Called in by EnviroTrac. Walk site with Premier and gas line is already pre-marked and located on opposite side of building. Confirm with Premier that location of pad is only place excavating performed / to be performed. Premier offsite

08:46	Form work	Form for pad is complete. 2” XPS insulation in base and foam expansion joint along vault wall. During pour, wire mesh to be laid in after form approx. half-filled. When pour is complete, form will be pulled. Space between pad and excavation sidewall will be back filled with gravel to approx. 2” bgs and finished flush to grade with asphalt cold patch.
09:10	MBG offsite	EnviroTrac remains onsite. KD will text me photos at end of day

CONTRACTOR PRODUCTION REPORT

LOCKHEED MARTIN – GREAT NECK, NEW YORK SITE

LM Great Neck VFD - 06/15/2021

PHOTO - Form



Form complete - note insulation at base and expansion joint along vault wall

END REPORT

LM Great Neck VFD - 06/15/2021

CONTRACTOR PRODUCTION REPORT

LOCKHEED MARTIN – GREAT NECK, NEW YORK SITE

LM Great Neck VFD - 06/16/2021

PROJECT			
Project Name	LM Great Neck VFD	**Date**	06/16/2021
Number	0888827878	**AM Weather**	Sunny cool
Superintendent	Rob McCarthy	**PM Weather**	
Onsite Time	07:05	**Temperature**	max: 75°F min: 65°F
Summary of Work: EnviroTrac to finish stair install at OU2 building vault			
Site Visitors:			

Changed Conditions/Delays/Conflicts Encountered

SAFETY	SHSO: Rob McCarthy
Was a Job Safety Meeting Held This Date?	Yes
Was an EnSafe SWAP Completed?	Yes
Was work performed involving Confined Space Entry, Excavations, Lock Out Tag Out, chemical exposures, or heights? (See SWAP for details)	No
Are there any lost-time accidents this date?	No
Actions & Inspection:	

CONTRACTORS ONSITE

Company	Personnel	Onsite	Offsite	Duration (hrs)
EnviroTrac	3	07:30	11:30	4

EQUIPMENT ONSITE

Equipment	Safety Check	Used Hrs	Idle Hrs	Repair Hrs
Two pick-up trucks		0	0	0
Hand tools		0	0	0

EQUIPMENT/MATERIALS RECEIVED

Description	Lot/ID	Received By	Quantity
NA			

CONTRACTOR PRODUCTION REPORT

LOCKHEED MARTIN – GREAT NECK, NEW YORK SITE

LM Great Neck VFD - 06/16/2021

SAMPLING, TESTING & INSPECTIONS	
Description	**Company/Personnel**
NA	

WASTE ACCUMULATED, STOCKPILED AND TRANSPORTED OFFSITE
Description
NA

SUMMARY OF WORK ACTIVITIES		
Time	**Title**	**Notes**
07:00	RM on site	Wayne opened gate and building
07:30	EnviroTrac on site	EnviroTrac begins to remove forms
08:10	Form removal	Forms removed, gravel and asphalt placed around concrete
08:30	Stair placement	Placing stairs on pad, adjusting and determine lag bolts
10:00		Stairs placed and secured
10:36	RW-100 area work	Area reviewed for trip hazard, placed gravel around edges

CONTRACTOR PRODUCTION REPORT

LOCKHEED MARTIN – GREAT NECK, NEW YORK SITE

LM Great Neck VFD - 06/16/2021

PHOTO -	PHOTO -
	

CONTRACTOR PRODUCTION REPORT

LOCKHEED MARTIN – GREAT NECK, NEW YORK SITE

LM Great Neck VFD - 06/16/2021

PHOTO -	PHOTO -
	

PHOTO -	PHOTO -
	

CONTRACTOR PRODUCTION REPORT

LOCKHEED MARTIN – GREAT NECK, NEW YORK SITE

LM Great Neck VFD - 06/16/2021

PHOTO -	PHOTO -
	

END REPORT

LM Great Neck VFD - 06/16/2021

CONTRACTOR PRODUCTION REPORT

LOCKHEED MARTIN – GREAT NECK, NEW YORK SITE

LM Great Neck VFD - 06/28/2021

PROJECT			
Project Name	LM Great Neck VFD	**Date**	06/28/2021
Number	0888827878	**AM Weather**	Sunny
Superintendent	Marshall Gibson	**PM Weather**	Sunny
Onsite Time	07:00	**Temperature**	max: 95°F min: 75°F
Summary of Work: VFD punch list / stray voltage			
Site Visitors: Tom Whitaker - AMEC			
Changed Conditions/Delays/Conflicts Encountered			

SAFETY	SHSO: Marshall Gibson
Was a Job Safety Meeting Held This Date?	Yes
Was an EnSafe SWAP Completed?	Yes
Was work performed involving Confined Space Entry, Excavations, Lock Out Tag Out, chemical exposures, or heights? (See SWAP for details)	No
Are there any lost-time accidents this date?	No
Actions & Inspection:	

CONTRACTORS ONSITE

Company	Personnel	Onsite	Offsite	Duration (hrs)
Hinck	2	07:00	15:00	8

EQUIPMENT ONSITE

Equipment	Safety Check	Used Hrs	Idle Hrs	Repair Hrs
box truck	Hinck	8	0	0

EQUIPMENT/MATERIALS RECEIVED

Description	Lot/ID	Received By	Quantity
NA			

CONTRACTOR PRODUCTION REPORT

LOCKHEED MARTIN – GREAT NECK, NEW YORK SITE

LM Great Neck VFD - 06/28/2021

SAMPLING, TESTING & INSPECTIONS	
Description	**Company/Personnel**
NA	

WASTE ACCUMULATED, STOCKPILED AND TRANSPORTED OFFSITE
Description
NA

SUMMARY OF WORK ACTIVITIES		
Time	**Title**	**Notes**
07:00	Mobilization	MBG on-site Tom Whitaker - AMEC Hinck - Bob Hermonn (BH) - foreman Hinck- Andrew Ferrizz (AF) - assistant All on-site; conduct H&S tailgate meeting
07:10	Mobilization	Check in with Dave and Wayne with PES regarding stray voltage investigation. BH indicates pumps/system will need to be off during investigation for stray voltage. BH will coordinate with PES. Review punch list items - all are on the OU1 side and will address each one while doing stray voltage investigation at each vault. MBG obtains a 4-gas meter from PES to screen vaults during work.
08:00	RW-1RD	Begin at RW-1RD. MBG opens vault and allow to passively ventilate. After 5-min check readings: O2 = 20.9% H2S = 0ppm CO = 0ppm LEL = 0% Give permission to enter vault. Open RW-1RS and allow that to start ventilating as well

09:20	RW-1RD	Hinck has checked both pump and vault power - both appear OK, no sig. issues with wire insulation. Have PES re-power pump and check - do not see stray voltage, suggesting an induced voltage is occurring.
09:24	Vault air Monitoring RW-1RD	O2 = 20.9% CO = 0ppm H2S = 0ppm LEL = 0%
09:53	RW-1RD	Through inspection, it's thought that an improper bound may be occurring at vault transformer, due to paint. Add a ground leg between circuit panel bus-bar and circuit panel ground. Re-check and no change. Readings are consistent across all 3 legs, suggesting issue may lie before vaults. At AMEC's recommendation, leave added ground leg.
10:10	RW-1RS	Begin work at RW-1RS
10:17	OU2 stairs	Jim Wilkinson with EnviroTrac on-site to install railing at OU2 stairs. MBG and Jim offsite to OU2
10:30	OU2 stairs	Conduct H&S meeting EnviroTrac installs handrail and secures with screws. EnviroTrac offsite once complete MBG offsite / secure gate and back to OU1
10:45	RW-1RS	MBG back on-site at OU1. Hinck no longer at RW-1RS, have gone to treatment building to investigate stray voltage
12:15	GWT Building OU1	Hinck investigation at OU1 treatment building identifies that for each vault RW-1RS, RW-1RD, and EW-1R, both vault power and pump power are run in their own conduit (i.e. EW-1R pump and vault power are run in the same conduit, presumably to EW-1R vault, same applies to others). Additionally, by testing at the MCC panel it appears that the stray voltage is due to induction of electricity across the 480V lines run in the conduit. TW with AMEC agrees with induction causing stray voltage issue.

13:30	Punch list EW-1R	Team to EW-1R to complete punch list. MBG opens vault, allows to passively ventilate for 5min and based on 4-gas meter readings being acceptable, allow Hinck access to vault. O2 = 20.9% CO = 0ppm H2S = 0ppm LEL = 0% Hinck coats nipple going into disconnect with Plastibond. Punch list identified that an additional bonding wire was required for ground; however, upon inspection this is not needed. TW with AMEC agrees. Secure vault
14:00	Punch list	Hinck, AMEC, MBG discuss punch list. Noted that there were some discrepancies in the June 3rd email from Bob Maple vs. what was encountered in the field. Specifically, the running of the #6 bonding wire was needed at RW-1RD, though not specified. It's likely Bob Maple got well IDs confused. TW agrees and concurs that all punch list items completed, as specified.
14:30	Demobilization	Return to OU1 treatment building, return their 4-gas meter, and check-out with PES. Give Dave with PES an update on status, that Hinck work complete. Dave agrees and tells me that Eagle will be out on Wed. or Thursday to address transducer water level issue. PES opens electrical vault behind treatment building and team confirms no spliced wires in vault.
14:40	Demobilization	MBG/Hinck/AMEC off site. MBG to DW-15 to collect soil sample from drum (see that contractor form).

PHOTO - Punch list RW-1RD	PHOTO - Punch list RW-1RD
	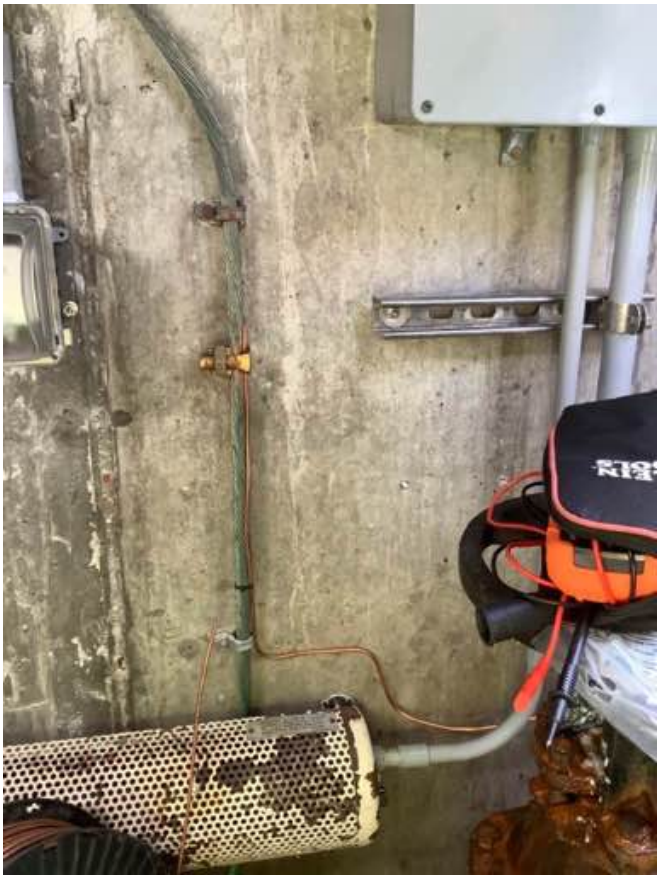
Add PVC sealant to fitting RW-1RD pump disconnect	New #6 bonding wire between old and new bank

PHOTO - Punch list RW-1RD	PHOTO - Punch list RW-1RD
	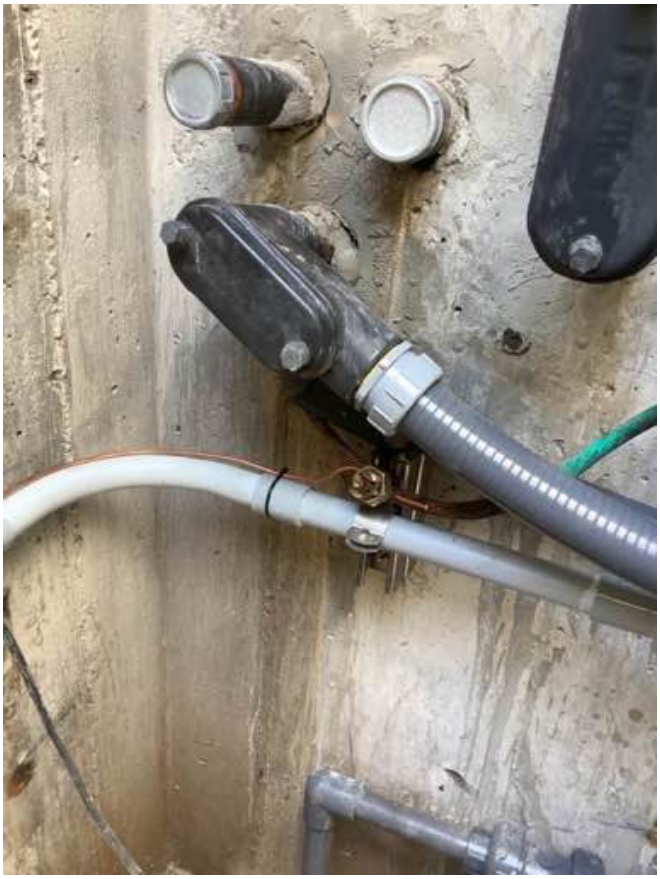
Re-attach old bank ground. Hinck filed connection to clean off corrosion and ensure good bond	New #6 wire bonded to new bank

PHOTO - OU2 handrail	PHOTO - Punch list
	
Handrail installed	EW-1R, PVC coating onto nipple going to disconnect switch.

PHOTO - Vault at OU1 treatment building	PHOTO - Vault at OU1 treatment building
	

END REPORT

LM Great Neck VFD - 06/28/2021

APPENDIX E

WEEKLY REPORTS

ENSAFE
creative thinking. custom solutions. ®

March 23, 2021

Mr. Girish Desai Via email: girish.desai@dec.ny.gov
New York State Department of Environmental Conservation
Region 1 Headquarters
50 Circle Road
Stony Brook, NY 11790-3409

Re: Weekly Report – March 15 to 19, 2021
OU1 and OU2 VFD / Electrical Upgrade Project
Former Unisys Site, Lake Success, New York

Dear Mr. Desai,

EnSafe Inc. is pleased to submit this Weekly Report for the OU1 and OU2 VFD Installation and Electrical Upgrade Project at the Former Unisys Site, Lake Success, New York.

Work Performed this Week

Work performed the week of March 15 to 19 includes:

- Project Kick-Off, Health and Safety Meeting, Radiation Training – March 15
- Work initiated at vault RW-1RD – March 15
- Pump RW-1RD shutdown on March 16, reprogramming and fiber optic bypass allowed other pumps to remain operational, the system continued to run at 850 gpm with increased flow from RW-3.
- Remote control panel replacement and electric work continued March 16 to 19

Daily health and safety meeting forms, contractor summary forms, photographs, and additional information describing the work are maintained in our internal files and are available if requested.

Work Anticipated next Week

The work anticipated for the week of March 22 to 26 includes:

- Restart of Pump RW-1RD, following restart and commissioning plan
- Operate RW-1RD and begin work at RW-1RS
- Pump RW-1RS expected shutdown will be March 24
- Utility mark out at OU2, RW-100, expected March 23

March 31, 2021

Mr. Girish Desai Via email: girish.desai@dec.ny.gov
New York State Department of Environmental Conservation
Region 1 Headquarters
50 Circle Road
Stony Brook, NY 11790-3409

Re: Weekly Report – March 22 to 26, 2021
OU1 and OU2 VFD / Electrical Upgrade Project
Former Unisys Site, Lake Success, New York

Dear Mr. Desai,

EnSafe Inc. is pleased to submit this Weekly Report for the OU1 and OU2 VFD Installation and Electrical Upgrade Project at the Former Unisys Site, Lake Success, New York.

Work Performed this Week

Work performed the week of March 22 to 26 includes:

- Restart of Pump RW-1RD, following restart and commissioning plan
- Operate RW-1RD and begin work at RW-1RS
- Pump RW-1RS shutdown March 24, reprogramming and fiber optic bypass allowed other pumps to remain operational, the system continued to run at 850 gpm with increased flow from RW-3.
- Utility mark out at OU2, RW-100, March 23

Daily health and safety meeting forms, contractor summary forms, photographs, and additional information describing the work are maintained in our internal files and are available if requested.

Work Anticipated next Week

The work anticipated for the week of March 22 to 26 includes:

- Restart of Pump RW-1RS, following restart and commissioning plan
- Operate RW-1RS and begin work at EW-1R
- OU2 – RW100 - Expose conduits and exterior of vault, core for conduit installation
- OU2 – RW100 - Prepare for concrete pad installation

Schedule

Based on the status of work, there are no deviations to the schedule previously provided to

Lockheed Martin via the weekly schedule updates.

Deviations from Work Plan

None.

Future Work Details Being Finalized

- Fiber optic evaluation and programming

Community Air Monitoring

Community air monitoring was not performed for this project as there were no intrusive activities performed this week.

Sincerely,

EnSafe, Inc., by



Rob McCarthy
Project Manager

Copies:

Glenda Clark, Lockheed Martin *glenda.b.clark@lmco.com*
Bill Glynn, CDM Smith *GlynnWK@cdmsmith.com*
Stuart Pearson, AMEC *stuart.pearson@woodplc.com*

Schedule

Based on the status of work, there are no deviations to the schedule previously provided to Lockheed Martin via the weekly schedule updates.

Deviations from Work Plan

None.

Future Work Details Being Finalized

- Fiber optic evaluation and programming

Community Air Monitoring

Community air monitoring was not performed for this project as there were no intrusive activities performed this week.

Sincerely,

EnSafe, Inc., by

Rob McCarthy
Project Manager

Copies:

Glenda Clark, Lockheed Martin	*glenda.b.clark@lmco.com*
Bill Glynn, CDM Smith	*GlynnWK@cdmsmith.com*
Stuart Pearson, AMEC	*stuart.pearson@woodplc.com*

ENSAFE
creative thinking. custom solutions. ®

April 8, 2021

Mr. Girish Desai
New York State Department of Environmental Conservation
Region 1 Headquarters
50 Circle Road
Stony Brook, NY 11790-3409

Via email: girish.desai@dec.ny.gov

Re: Weekly Report – March 29 to April 2, 2021
OU1 and OU2 VFD / Electrical Upgrade Project
Former Unisys Site, Lake Success, New York

Dear Mr. Desai,

EnSafe Inc. is pleased to submit this Weekly Report for the OU1 and OU2 VFD Installation and Electrical Upgrade Project at the Former Unisys Site, Lake Success, New York.

Work Performed this Week

Work performed the week of March 29 to April 2 includes:

- Completed electrical upgrades and restarted Pump RW-1RS (March 30), following the restart and commissioning plan
- Operated RW-1RS and adjusted flow from other wells to maintain the 850 gpm operation of the system
- Began work at EW-1R without shutting down the well pump
- OU2 – RW100 - Exposed conduits and exterior of vault, core for conduit installation
- OU2 – RW100 - Prepare for concrete pad installation, including placement of backfill

Daily health and safety meeting forms, contractor summary forms, photographs, and additional information describing the work are maintained in our internal files and are available if requested.

Work Anticipated Next Week

The work anticipated for the week of April 5 to 9 includes:

- Shut down pump EW-1R, complete electrical and panel replacement work while adjusting other wells to maintain the full flow to the system
- OU2 – RW100 – Complete compaction testing of backfill; prepare rebar and forms for concrete pad
- OU1 – Harmonic Filter Pad – Remove asphalt and prepare area for concrete pad construction, install form

- Concrete placement for pads at OU2 RW100 and OU1 Harmonic Filter

Schedule

Based on the status of work, there are no deviations to the schedule previously provided to Lockheed Martin via the weekly schedule updates.

Deviations from Work Plan

CAMP data was not collected during the shallow soil removal (3 feet) at RW-100 (March 29) due to the limited timeframe (2 to 3 hours) during which the work was completed and a mis-communication that affected CAMP equipment availability.

Future Work Being Developed

- Fiber optic evaluation and programming

Community Air Monitoring

Community air monitoring data was not collected during intrusive work at RW-100, as described above. No other intrusive activity was conducted during this project last week.

Sincerely,

EnSafe, Inc., by



Rob McCarthy
Project Manager

Copies:

Glenda Clark, Lockheed Martin *glenda.b.clark@lmco.com*
Bill Glynn, CDM Smith *GlynnWK@cdmsmith.com*
Stuart Pearson, AMEC *stuart.pearson@woodplc.com*

ENSAFE
creative thinking. custom solutions. ®

April 15, 2021

Mr. Girish Desai
New York State Department of Environmental Conservation
Region 1 Headquarters
50 Circle Road
Stony Brook, NY 11790-3409

Via email: girish.desai@dec.ny.gov

Re: Weekly Report – April 5 to 9, 2021
OU1 and OU2 VFD / Electrical Upgrade Project
Former Unisys Site, Lake Success, New York

Dear Mr. Desai,

EnSafe Inc. is pleased to submit this Weekly Report for the OU1 and OU2 VFD Installation and Electrical Upgrade Project at the Former Unisys Site, Lake Success, New York.

Work Performed this Week

Work performed the week of April 5 to 9 includes:

- Shut down pump EW-1R, complete electrical and panel replacement work
- Restart of Pump EW-1R, following restart and commissioning plan with an average down time for each well at OU1 of approximately 4 days
- OU2 – RW100 –
    - complete compaction testing of backfill
    - prepare rebar and forms for concrete pad
    - pour concrete pad
    - remove forms and regrade soil in area of concrete pad
- OU1 – Harmonic Filter Pad –
    - remove asphalt and prepare area for concrete pad construction, install form
    - pour concrete pad

Daily health and safety meeting forms, contractor summary forms, photographs, and additional information describing the work are maintained in our internal files and are available if requested.

Work Anticipated Next Week

The work anticipated for the week of April 12 to 16 includes:

- Shut down OU2 / RW-100 pump, complete electrical and panel replacement work

Schedule

Based on the status of work, there are no deviations to the schedule previously provided to Lockheed Martin via the weekly schedule updates. The project is currently anticipated to be completed 2 to 3 weeks earlier than originally estimated.

Deviations from Work Plan

None.

Future Work Being Developed

- Fiber optic evaluation and programming

Community Air Monitoring

Community air monitoring was not performed for this project as there were no intrusive activities performed this week.

Sincerely,

EnSafe, Inc., by

Rob McCarthy
Project Manager

Copies:

Glenda Clark, Lockheed Martin *glenda.b.clark@lmco.com*
Bill Glynn, CDM Smith *GlynnWK@cdmsmith.com*
Stuart Pearson, AMEC *stuart.pearson@woodplc.com*

ENSAFE
creative thinking. custom solutions. ®

April 21, 2021

Mr. Girish Desai Via email: girish.desai@dec.ny.gov
New York State Department of Environmental Conservation
Region 1 Headquarters
50 Circle Road
Stony Brook, NY 11790-3409

Re: Weekly Report – April 12 to 16, 2021
OU1 and OU2 VFD / Electrical Upgrade Project
Former Unisys Site, Lake Success, New York

Dear Mr. Desai,

EnSafe Inc. is pleased to submit this Weekly Report for the OU1 and OU2 VFD Installation and Electrical Upgrade Project at the Former Unisys Site, Lake Success, New York.

Work Performed this Week

Work performed the week of April 12 to 16 includes:

- Final ancillary work was conducted within the EW-1R vault
- OU2 – RW100 – remained operational for this week
    - Prepared the aboveground panel, equipment, conduits, wiring for connection to the well pump without shutting it down
    - Received the active harmonic filter and placed within OU2 treatment building

Daily health and safety meeting forms, contractor summary forms, photographs, and additional information describing the work are maintained in our internal files and are available if requested.

Work Anticipated Next Week

The work anticipated for the week of April 19 to 23 includes:

- Shut down OU2 / RW-100 pump for several days
    - complete electrical and panel replacement work
- OU2/RW-100 may restart late in the week, pending completion of electric panel work

Schedule

Based on the status of work, there are no deviations to the schedule previously provided to Lockheed Martin via the weekly schedule updates. The project is currently anticipated to be completed 2 to 3 weeks earlier than originally estimated.

Deviations from Work Plan

None.

Future Work Being Developed

- Fiber optic evaluation and programming
- Harmonic filter installation

Community Air Monitoring

Community air monitoring was not performed for this project as there were no intrusive activities performed this week.

Sincerely,

EnSafe, Inc., by

Rob McCarthy
Project Manager

Copies:

Glenda Clark, Lockheed Martin	*glenda.b.clark@lmco.com*
Bill Glynn, CDM Smith	*GlynnWK@cdmsmith.com*
Stuart Pearson, AMEC	*stuart.pearson@woodplc.com*

ENSAFE
creative thinking. custom solutions. ®

May 10, 2021

Mr. Girish Desai
New York State Department of Environmental Conservation
Region 1 Headquarters
50 Circle Road
Stony Brook, NY 11790-3409

Via email: girish.desai@dec.ny.gov

Re: Weekly Report – April 19 to 23, 2021
OU1 and OU2 VFD / Electrical Upgrade Project
Former Unisys Site, Lake Success, New York

Dear Mr. Desai,

EnSafe Inc. is pleased to submit this Weekly Report for the OU1 and OU2 VFD Installation and Electrical Upgrade Project at the Former Unisys Site, Lake Success, New York.

Work Performed this Week

Work performed the week of April 19 to 23 includes:

- OU2 – RW100 – Shut down on April 19
  - Prepare aboveground panel, equipment, conduits, wiring and VFD installation
  - Complete electric wiring from aboveground panels to vault components

Daily health and safety meeting forms, contractor summary forms, photographs, and additional information describing the work are maintained in our internal files and are available if requested.

Work Anticipated Next Week

The work anticipated for the week of April 26 to 30 includes:

- Complete electrical wiring and VFD installation at the OU2 GWTS
- Programming of VFD and new panel
- OU2/RW-100 restart, expected by April 29th
- Connect wiring to the active harmonic filter and activate for the OU2 electrical system
- Complete installation of pressure transducers within the OU1/2 GWTS wells

Schedule

Based on the status of work, there are no deviations to the schedule previously provided to Lockheed Martin via the weekly schedule updates. The project is currently anticipated to be completed 2 to 3 weeks earlier than originally estimated.

Deviations from Work Plan

None.

Future Work Being Developed

- Fiber optic evaluation and programming
- Harmonic filter installation

Community Air Monitoring

Community air monitoring was not performed for this project as there were no intrusive activities performed this week.

Sincerely,

EnSafe, Inc., by



Rob McCarthy
Project Manager

Copies:

Glenda Clark, Lockheed Martin *glenda.b.clark@lmco.com*
Bill Glynn, CDM Smith *GlynnWK@cdmsmith.com*
Stuart Pearson, AMEC *stuart.pearson@woodplc.com*

ENSAFE
creative thinking. custom solutions. ®

May 12, 2021

Mr. Girish Desai Via email: girish.desai@dec.ny.gov
New York State Department of Environmental Conservation
Region 1 Headquarters
50 Circle Road
Stony Brook, NY 11790-3409

Re: Weekly Report – April 26 to 30, 2021
OU1 and OU2 VFD / Electrical Upgrade Project
Former Unisys Site, Lake Success, New York

Dear Mr. Desai,

EnSafe Inc. is pleased to submit this Weekly Report for the OU1 and OU2 VFD Installation and Electrical Upgrade Project at the Former Unisys Site, Lake Success, New York.

Work Performed this Week

Work performed the week of April 26 to 30 includes:

- OU2 – RW100 – Shut down on April 19
  - Completed electrical wiring and VFD installation
  - Initial programming of VFD and new panels
- OU1 – Transducers installed at RW-1RS, RW-1RD, EW-1R

Daily health and safety meeting forms, contractor summary forms, photographs, and additional information describing the work are maintained in our internal files and are available if requested.

Work Anticipated Next Week

The work anticipated for the week of May 3 to 7 includes:

- Complete programming of VFD and new panel
- OU2/RW-100 restart
- Wire active harmonic filter and connect into OU2 electrical system
- Conduit and begin wiring active harmonic filter at OU1

Schedule

Based on the status of work, there are no deviations to the schedule previously provided to Lockheed Martin via the weekly schedule updates. The project is currently anticipated to be completed 2 to 3 weeks earlier than originally estimated.

Deviations from Work Plan

None.

Future Work Being Developed

- Fiber optic evaluation and programming

Community Air Monitoring

Community air monitoring was not performed for this project as there were no intrusive activities performed this week.

Sincerely,

EnSafe, Inc., by

Rob McCarthy
Project Manager

Copies:

Glenda Clark, Lockheed Martin *glenda.b.clark@lmco.com*
Bill Glynn, CDM Smith *GlynnWK@cdmsmith.com*
Stuart Pearson, AMEC *stuart.pearson@woodplc.com*

ENSAFE
creative thinking. custom solutions. ®

May 20, 2021

Mr. Girish Desai
New York State Department of Environmental Conservation
Region 1 Headquarters
50 Circle Road
Stony Brook, NY 11790-3409

Via email: girish.desai@dec.ny.gov

Re: Weekly Report – May 3 to 7, 2021
OU1 and OU2 VFD / Electrical Upgrade Project
Former Unisys Site, Lake Success, New York

Dear Mr. Desai,

EnSafe Inc. is pleased to submit this Weekly Report for the OU1 and OU2 VFD Installation and Electrical Upgrade Project at the Former Unisys Site, Lake Success, New York.

Work Performed this Week

Work performed the week of May 3 to 7 includes:

- OU2 – RW100 – Shut down on April 19
  - Complete programming of VFD and new panel
  - OU2/RW-100 restart
- Wire active harmonic filter and connect into OU2 electrical system
  Conduit and begin wiring active harmonic filter at OU1

Daily health and safety meeting forms, contractor summary forms, photographs, and additional information describing the work are maintained in our internal files and are available if requested.

Work Anticipated Next Week

The work anticipated for the week of May 10 to 14 includes:

- Complete OU2 active harmonic filter connection and start up system
- Complete wiring active harmonic filter at OU1
- Prepare for OU1 active harmonic filter connection and start up

Schedule

Based on the status of work, there are no deviations to the schedule previously provided to Lockheed Martin via the weekly schedule updates. The project is currently anticipated to be completed 2 to 3 weeks earlier than originally estimated.

Deviations from Work Plan

None.

Future Work Being Developed

- Fiber optic evaluation and programming

Community Air Monitoring

Community air monitoring was not performed for this project as there were no intrusive activities performed this week.

Sincerely,

EnSafe, Inc., by

Rob McCarthy
Project Manager

Copies:

Glenda Clark, Lockheed Martin *glenda.b.clark@lmco.com*
Bill Glynn, CDM Smith *GlynnWK@cdmsmith.com*
Stuart Pearson, AMEC *stuart.pearson@woodplc.com*

APPENDIX F

PHOTOGRAPHS

EW-1R Pre-Construction Photographs
March 2021





EW-1R Pre-Construction Photographs
March 2021



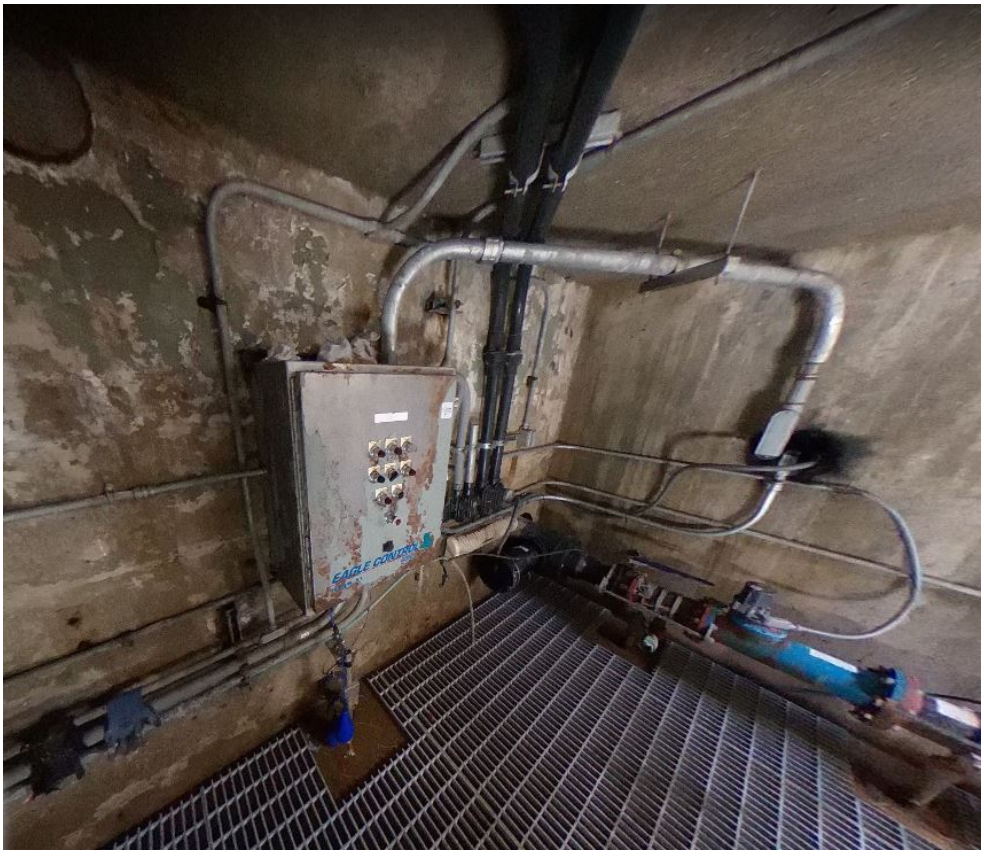

EW-1R Pre-Construction Photographs
March 2021

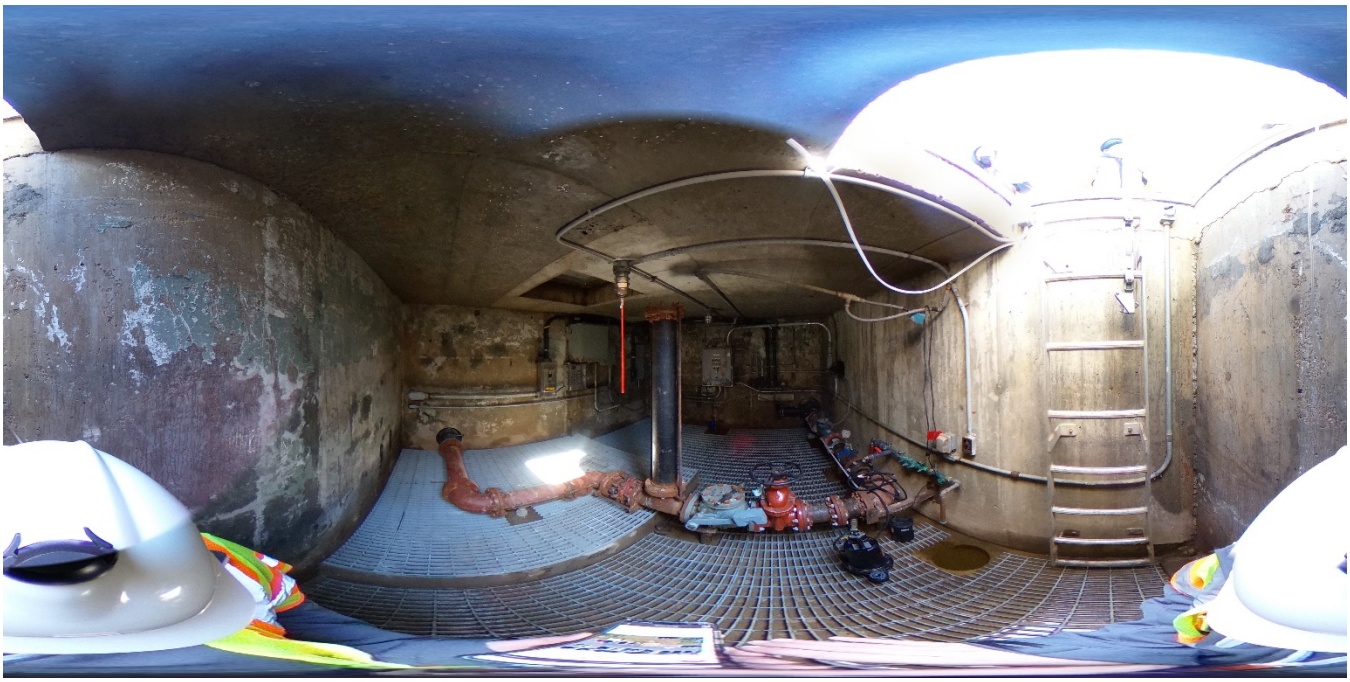

RW-1RS Pre-Construction Photographs
March 2021





RW-1RS Pre-Construction Photographs
March 2021



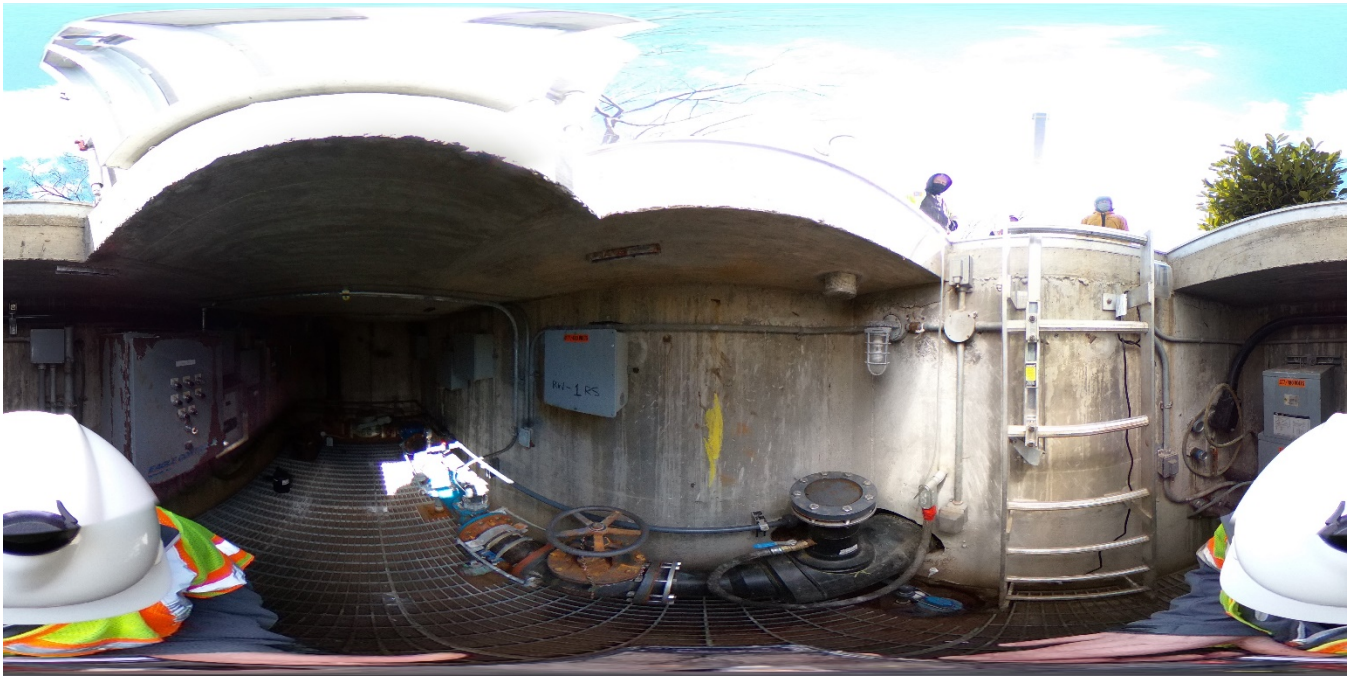

RW-1RS Pre-Construction Photographs
March 2021





RW-1RS Pre-Construction Photographs
March 2021



RW-1RD Pre-Construction Photographs
March 2021





RW-1RD Pre-Construction Photographs
March 2021



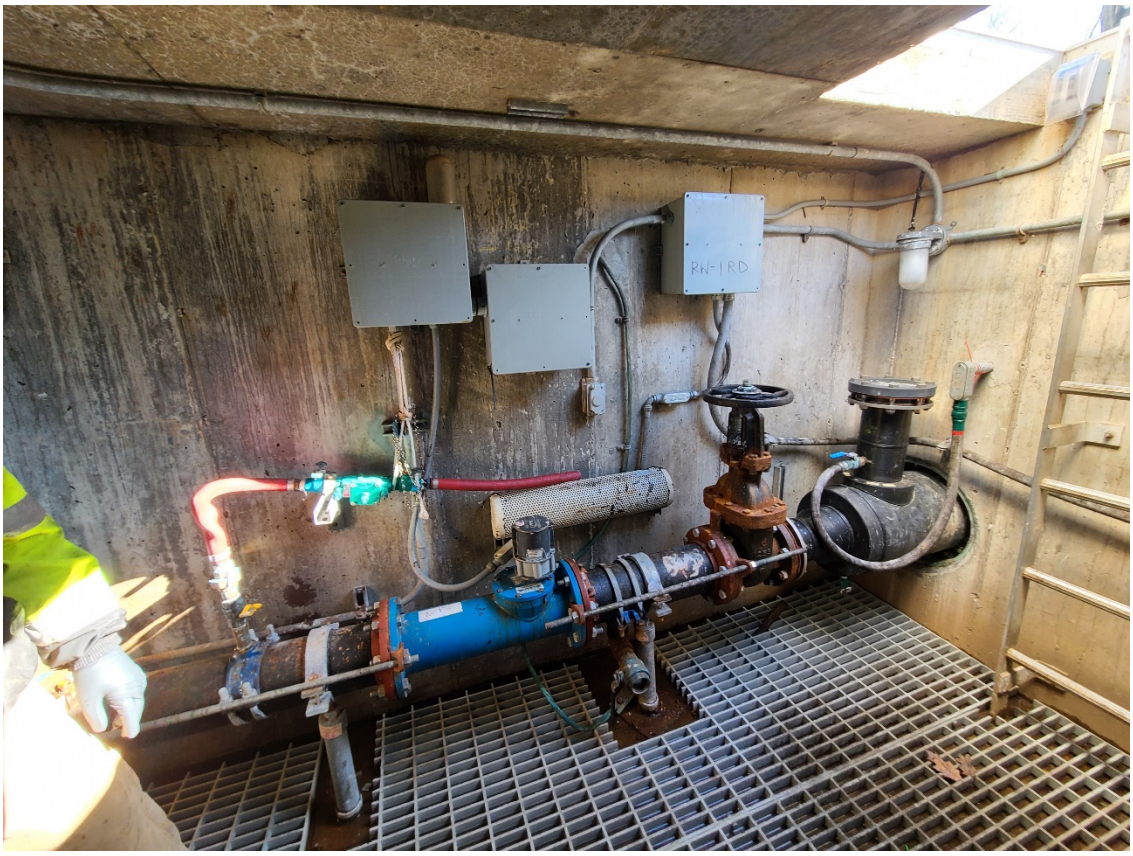

RW-1RD Pre-Construction Photographs
March 2021



RW-100 Pre-Construction Photographs
March 2021





RW-100 Pre-Construction Photographs
March 2021



Pre-work photo (but after concrete cores were collected)

EW-1R Final Photographs
Substantial Completion Inspection
June 3, 2021

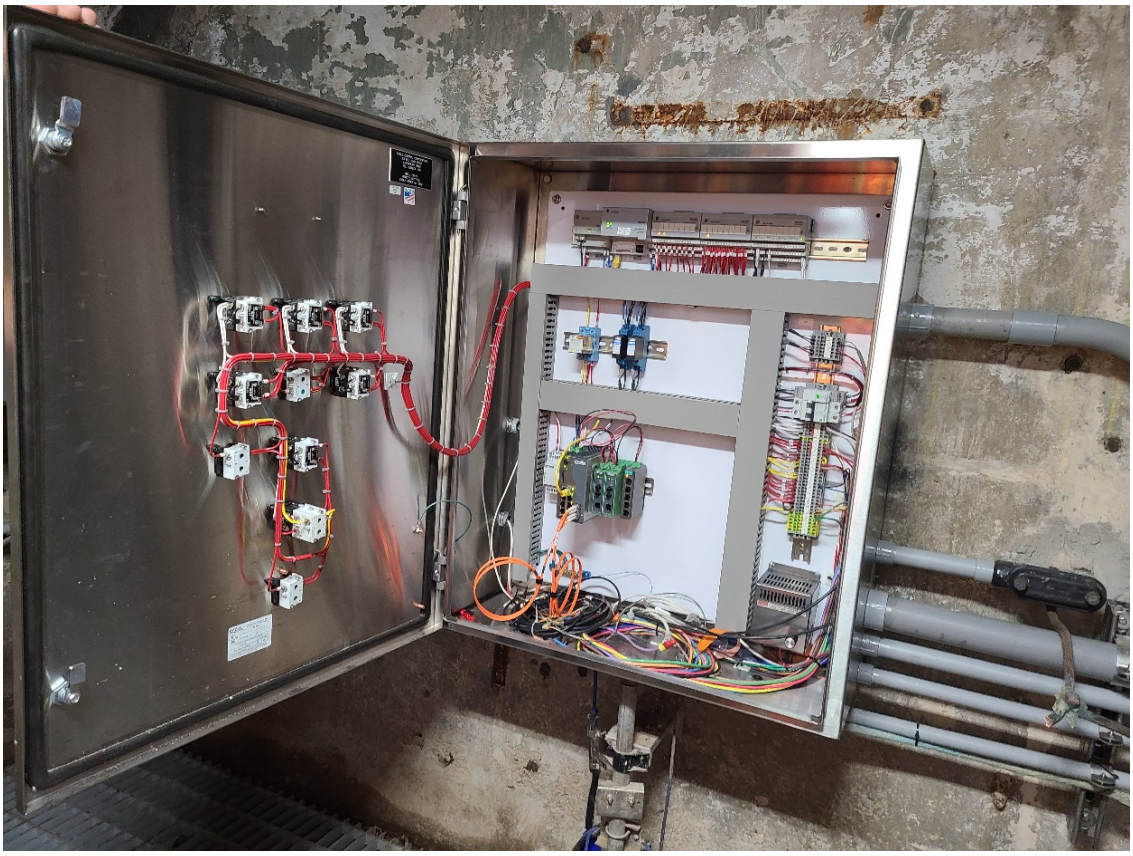



EW-1R Final Photographs
Substantial Completion Inspection
June 3, 2021





EW-1R Final Photographs
Substantial Completion Inspection
June 3, 2021



RW-1RS Final Photographs
Substantial Completion Inspection
June 3, 2021





RW-1RS Final Photographs
Substantial Completion Inspection
June 3, 2021





RW-1RD Final Photographs
Substantial Completion Inspection
June 3, 2021





RW-1RD Final Photographs
Substantial Completion Inspection
June 3, 2021





RW-1RD Final Photographs
Substantial Completion Inspection
June 3, 2021



RW-100 Final Photographs
Substantial Completion Inspection
June 3, 2021





RW-100 Final Photographs
Substantial Completion Inspection
June 3, 2021



Site Photographs
Substantial Completion Inspection
June 3, 2021





Site Photographs
Substantial Completion Inspection
June 3, 2021





Site Photographs
Substantial Completion Inspection
June 3, 2021



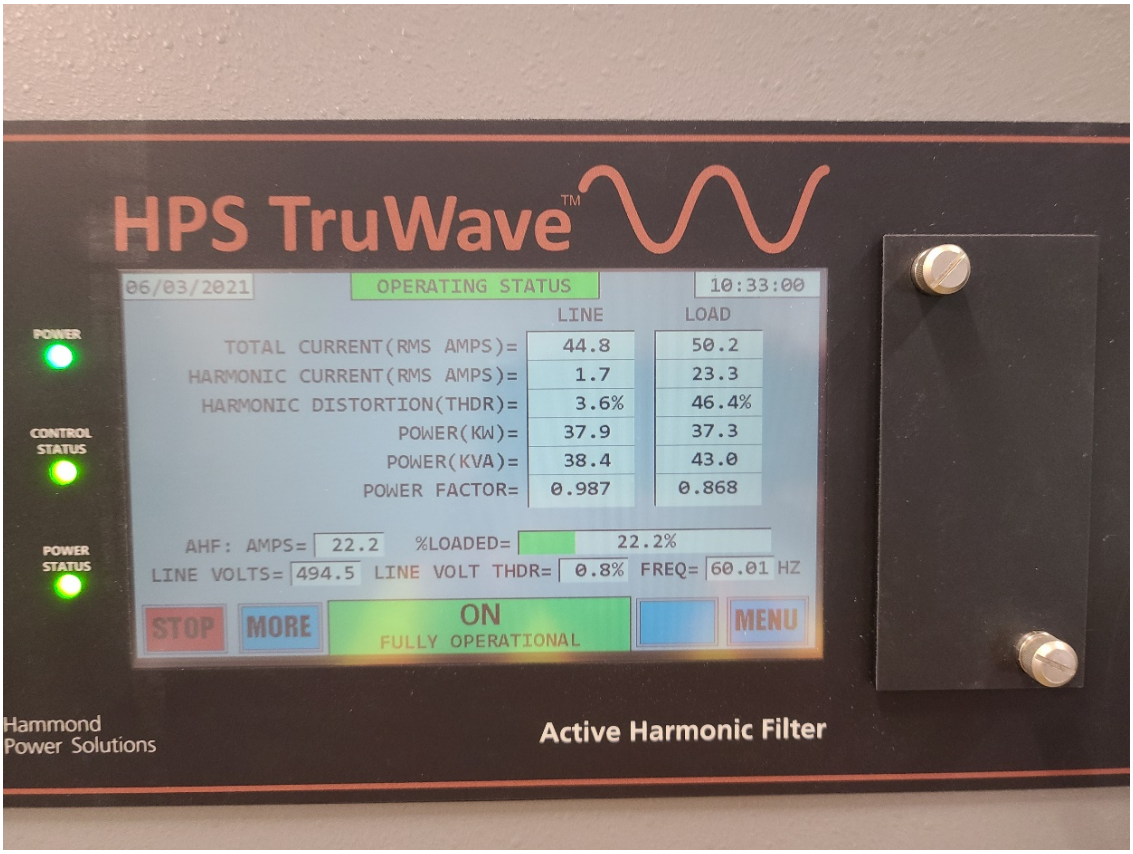

Site Photographs
Substantial Completion Inspection
June 3, 2021





Photographs
Punch List Completion
June 28, 2021



RW-1RD: Add PVC sealant to fitting RW-1RD pump disconnect

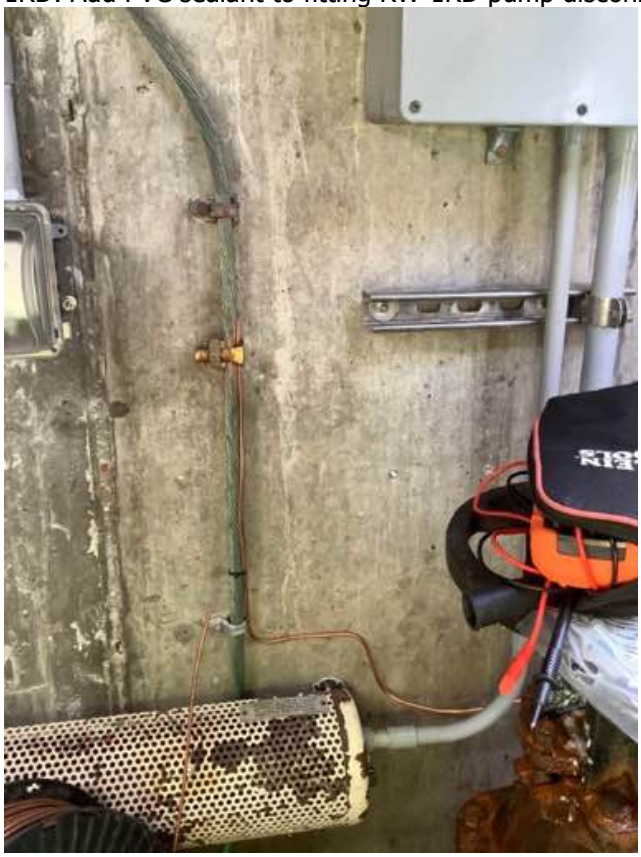

RW-1RD: New #6 bonding wire between old and new bank

Photographs
Punch List Completion
June 28, 2021



RW-1RD: Re-attach old bank ground. Hinck filed connection to clean off corrosion and ensure good bond

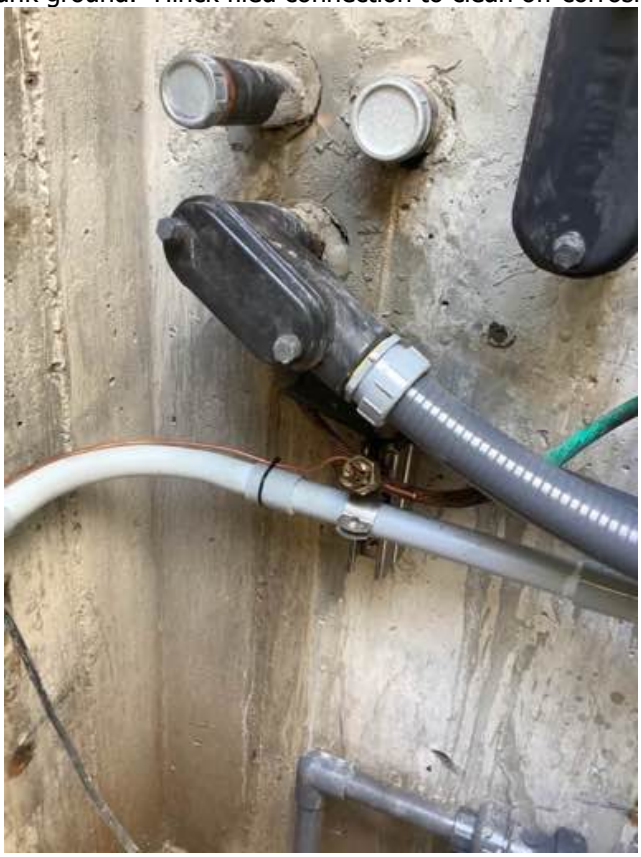

RW-1RD: New #6 wire bonded to new bank

Photographs
Punch List Completion
June 28, 2021



OU2: Handrail



EW-1R: PVC coating onto nipple going to disconnect switch.

Photographs
Punch List Completion
June 28, 2021



OU1: Vault at treatment building



OU1: Vault at treatment building

APPENDIX G

INTRUSIVE FIELD WORK REQUIREMENTS

LOCKHEED MARTIN

Dig Permit

See Enterprise Operations Procedure EO-28, Digging Projects, for instructions.

Date	Project Manager
March 26, 2021	Rob McCarthy, EnSafe

Building/Location
OU2 RW-100 fenced area

Purpose of excavation
Installation of concrete pad. Digging effort will be limited to the depth required for installation of the concrete pad (~3') and will include regrading of existing soil in the immediate area of the proposed pad.

Company/LM organization performing dig
EnSafe's subcontractor EnviroTrac

Planned dig date	Duration	Start time
March 29, 2021	1 week	10:00 AM
Expected depth	**Width**	**Length**
1-3'	7'	15'

Underground utilities identified?	Overhead utilities?	Electrical lines?	Gas lines?
☑ Yes ☐ No	☐ Yes ☑ No ☐ N/A	☑ Yes ☐ No	☐ Yes ☑ No
Sewer?	**Water?**	**Telecommunications?**	**Other? Specify:**
☐ Yes ☑ No	☑ Yes ☐ No	☑ Yes ☐ No	☑ Yes ☐ No

Site-specific or customer utility locating requirements completed?
☐ Yes ☐ No ☑ N/A

Sketch of dig project (or attach drawing)
See attached design drawing.

Utility location and mark out completed for EnviroTrac by Utility Detection, Inc. on March 23, 2021.
Utilities identified are the private electric, communications, and water line associated with the extraction well in the adjacent vault. The natural gas extending through the fenced area was also located.
Utilities have been cleared/marked by Dig Ticket #210881442.

Project Man 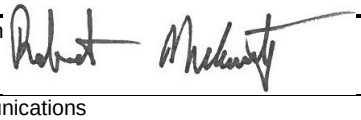	Date March 29, 2021	Customer	Date
Telecommunications	Date	Customer	Date
ESH	Date	Customer	Date
Building/Facility Manager			Date

LOCKHEED MARTIN

Risk Handling Checklist

Project Manager: Use this checklist to develop risk handling plans before the dig starts. You must also review Enterprise Operations Procedure EO-28, Digging Projects.

General Questions	☑	What Lockheed Martin processes could be affected by the dig? OU2 GWTS utilities or vault
	☑	What are the safety hazards? construction hazards, weather ,slips trips falls, struck by, vehicles
	☑	What could fail? OU2 GWTS
	☑	How could it fail? Damage to OU2 GWTS utilities
	☑	Does the area need to be returned to its normal state when the work is complete? Yes
	☑	How could the dig affect operations/test/production? Yes, OU2 GWTS.
	☑	Have potential risks been addressed with area management?
	☑	Am I comfortable with any risk handling plans, understanding the potential impact?
Traffic Control	☑	Ensure proper signage and communication.
	☑	Coordinate road or access closures through Industrial Security before starting the dig.
	☑	Ensure the work area is isolated from foot traffic by placing barriers and warning lights as required by EO-28.
	☑	Ensure that vehicle traffic will be safe.
	☑	Ensure that product transport will be safe.
Excavation	☑	Review facility drawings to identify utilities. Research old drawings as necessary.
	☑	Discuss the project with Facility Engineering/Maintenance staff who may have unique knowledge about the construction area not documented in facility drawings.
	☑	Process form EO-28-1, Dig Permit. Use this opportunity to explain the process and relate expectations to the contractor/LM organization that will perform the dig.
	☑	Have LM Telecommunications and the local utility identification service locate and mark utilities/underground obstacles.
	☑	Coordinate with other ongoing projects in the affected area.
	☑	Make every effort not to excavate around live utilities in service. Schedule an outage in advance or have Maintenance temporarily shut down and isolate the utilities while excavating.
	☑	If live utilities cannot be shut down while excavating, know where to isolate or shut them down if they are damaged while excavating.
	☑	Have a spotter(s) work with the equipment operator. Hand dig when necessary.
	☑	Excavate along the side of the utility; not on top.
	☑	Weather may affect the dig. Ensure water pipes are protected during freezing weather, especially if the trench will be left open over night. Rain may cause the side of the trench to slough, which can undermine and break pipes/conduit.
	☑	Ensure care when moving trench boxes in and out of trenches so pipes/conduit aren't damaged by the boxes.
	☑	Ensure surface drainage is controlled so that water doesn't get into the excavation and undermine soil supporting utilities.
	☑	Ensure stocked material is kept far enough back (minimum 2 feet) so that material and rocks don't fall on utilities in the open hole.
	☑	Ensure backfilling is done carefully: Re-bed utilities with proper material, filling all voids below. Keep inappropriate material from falling on or being placed in the trench. Be careful when compacting backfill in the two feet directly above the utility.
	☑	Keep the as-built utility drawing in the field while the excavation site is open. Take pictures if possible (horizontal alignment and elevations), if known utilities deviate from facility drawings or if utilities are found that are not on facility drawings. Give the modified as-built drawings to the Building/Facility Manager, who will update the drawing database.
	☑	Ensure that the equipment operator digs slowly and remains in control.
Personal Safety	☑	Ensure that trenching and shoring methods comply with the applicable OSHA regulations and are overseen by a "Competent Person," as defined in those regulations.
	☑	Regularly inspect methods to prevent violations.
	☑	Ensure LM employees do not dig or enter any excavation that is more than four feet deep.

Project Manager signature indicating completion of checklist review	Date

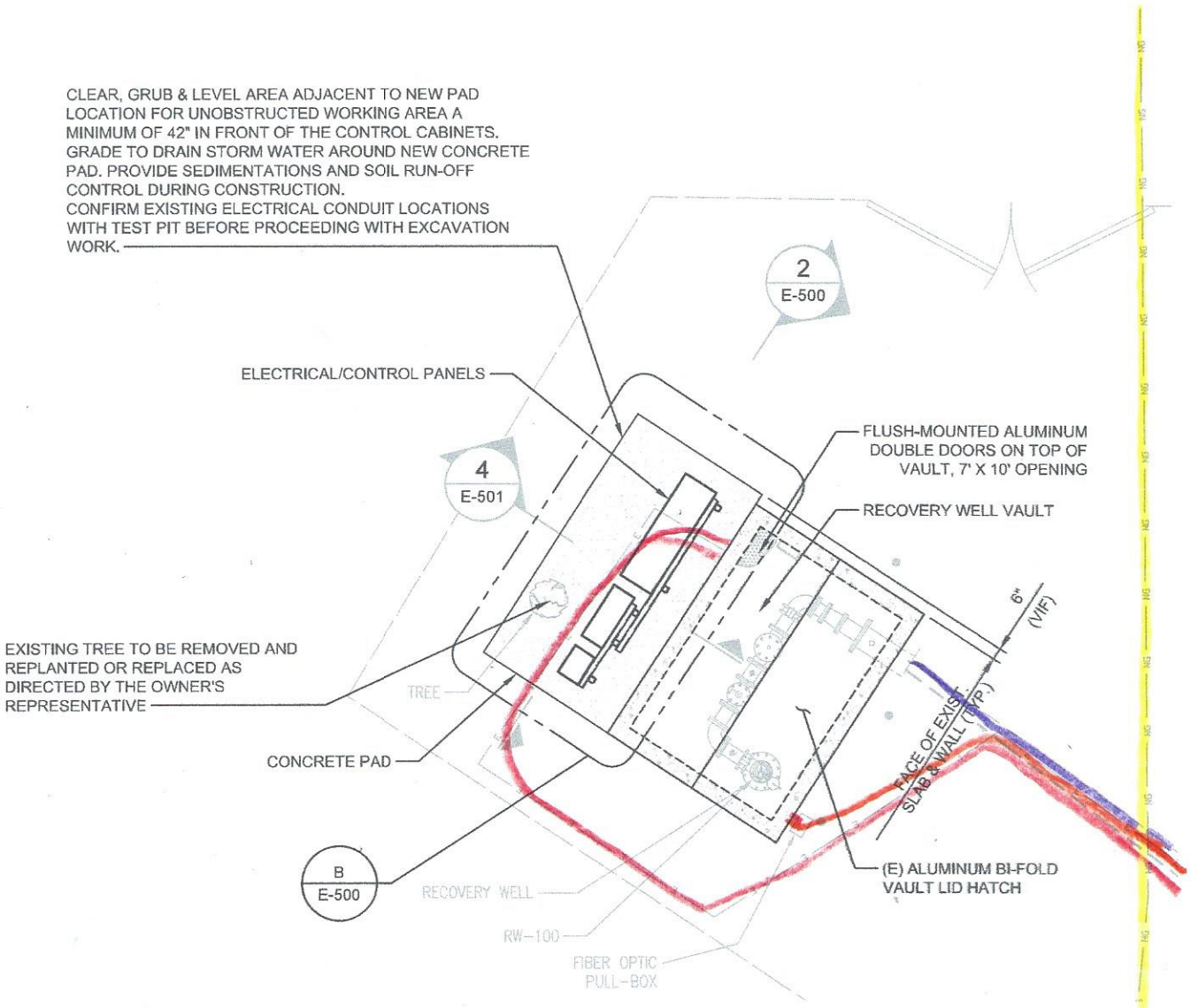

A / ES-111 PARTIAL SITE PLAN AT WELL VAULT RW-100

SCALE: 1"=5'-0"

RW-100 WATER

FIBER OPTIC

NATURAL GAS

ELECTRIC

MARK OUTS PERFORMED BY UTILITY DETECTION INC. 3/23/21

APPENDIX H

HEALTH AND SAFETY DOCUMENTATION

ENSAFE - CORP - SWAP (beta)

General

Site Emergency Number	911
Project Number Lookup	
Project Number	0888827878
Project	LM Greatneck electrial
Client	Lockheed Martin
Project Manager	Rob McCarthy
Location	Great Neck VFD
Date/Time	03/15/2021
Notice	If any work involves confined spaces, excavations, lock out tag out (LOTO), energized circuits, chemical exposure, or working at unguarded heights >4', contact the Corporate Health and Safety Manager or Senior Safety PM unless an approved HASP is in place.
Work Description	

Activities

Task	Confined Space Work
Hazards	
Hazards Other	Potential hazardous atmosphere
Controls	
Controls Other	Ventilation as well as 4 gas PID monitoring

Activities (1)

Task	Labor
Hazards	Physical - Slip/Trip/Fall - same level
Hazards Other	Environmental-weather
Controls	Foot : Safety shoes, Head/Face : Hard hat, Head/Face : Safety glasses w/ side shields (ANSI Z71)
Controls Other	Breaks if needed. Use vehicle as warming station. Hydrate as needed.

Activities (2)

Task	COVID
Hazards	
Hazards Other	Biological
Controls	
Controls Other	Social distancing and masks

SWAP Leader

SWAP Leader Name	Nick McCarthy

ENSAFE - CORP - SWAP (beta)

Signature	
Comments	
Send Copy SWAP	Rmccarthy@ensafe.com, mgibson@ensafe.com
Include the email addresses, separated by commas, for people you would like to receive a copy of the JHA after submitting.	

Employees

Acknowledgement	I understand the hazards and will utilize the controls as noted above. To be signed by all EnSafe personnel and subcontractors. Subcontractors must provide their own job hazard analysis tool to validate their tasks and controls. Subcontractors signing this document merely verify that they participated in the EnSafe T3 safety process.
Name	Marshall Gibson
Company	EnSafe
Signature	

Employees (1)

Acknowledgement	I understand the hazards and will utilize the controls as noted above. To be signed by all EnSafe personnel and subcontractors. Subcontractors must provide their own job hazard analysis tool to validate their tasks and controls. Subcontractors signing this document merely verify that they participated in the EnSafe T3 safety process.
Name	Rob McCarthy
Company	EnSafe
Signature	

Employees (2)

ENSAFE - CORP - SWAP (beta)

Acknowledgement	I understand the hazards and will utilize the controls as noted above. To be signed by all EnSafe personnel and subcontractors. Subcontractors must provide their own job hazard analysis tool to validate their tasks and controls. Subcontractors signing this document merely verify that they participated in the EnSafe T3 safety process.
Name	Jim Wilkinson
Company	Envirotrac
Signature	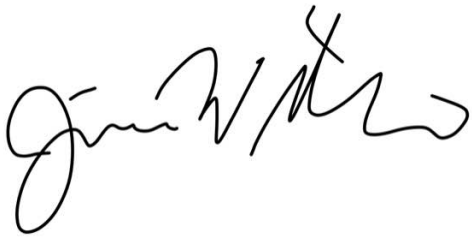

Employees (3)

Acknowledgement	I understand the hazards and will utilize the controls as noted above. To be signed by all EnSafe personnel and subcontractors. Subcontractors must provide their own job hazard analysis tool to validate their tasks and controls. Subcontractors signing this document merely verify that they participated in the EnSafe T3 safety process.
Name	Gabriel Costa
Company	Hinck electric
Signature	

Employees (4)

Acknowledgement	I understand the hazards and will utilize the controls as noted above. To be signed by all EnSafe personnel and subcontractors. Subcontractors must provide their own job hazard analysis tool to validate their tasks and controls. Subcontractors signing this document merely verify that they participated in the EnSafe T3 safety process.
Name	Bob Herrmann
Company	Hinck electric
Signature	

ENSAFE - CORP - SWAP (beta)

General

Site Emergency Number	911
Project Number Lookup	
Project Number	0888827878
Project	LM Greatneck VFD
Client	Lockheed Martin
Project Manager	Rob McCarthy
Location	Great Neck VFD
Date/Time	03/16/2021
Notice	If any work involves confined spaces, excavations, lock out tag out (LOTO), energized circuits, chemical exposure, or working at unguarded heights >4', contact the Corporate Health and Safety Manager or Senior Safety PM unless an approved HASP is in place.
Work Description	

Activities

Task	Confined space work
Hazards	
Hazards Other	Potential hazardous environment
Controls	
Controls Other	Initial ventilation (open both vault doors) and 4 gas meter monitoring throughout day

Activities (1)

Task	Entering and exiting vault
Hazards	Physical - Falls - from height (> 4 feet), Physical - Slip/Trip/Fall - same level
Hazards Other	
Controls	
Controls Other	Use guardrail, awareness and lower tools in if possible. Don't place tools on concrete pad surrounding vault. They may get knocked into opening.

Activities (2)

Task	Labor
Hazards	
Hazards Other	Environmental- cold weather
Controls	
Controls Other	Use car as warming station if necessary.

Activities (3)

Task	COVID
Hazards	

ENSAFE - CORP - SWAP (beta)

Hazards Other	Biological
Controls	
Controls Other	Social distancing and masks

SWAP Leader

SWAP Leader Name	Nick McCarthy
Signature	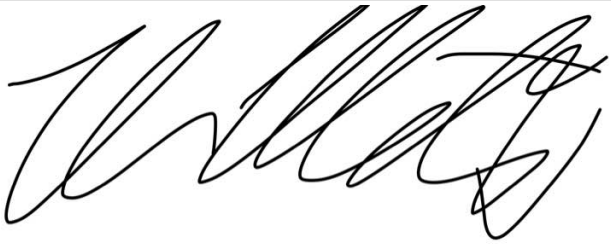
Comments	
Send Copy SWAP	rmccarthy@ensafe.com mgibson@ensafe.com
Include the email addresses, separated by commas, for people you would like to receive a copy of the JHA after submitting.	

Employees

Acknowledgement	I understand the hazards and will utilize the controls as noted above. To be signed by all EnSafe personnel and subcontractors. Subcontractors must provide their own job hazard analysis tool to validate their tasks and controls. Subcontractors signing this document merely verify that they participated in the EnSafe T3 safety process.
Name	Marshall Gibson
Company	ENSAFE
Signature	

Employees (1)

Acknowledgement	I understand the hazards and will utilize the controls as noted above. To be signed by all EnSafe personnel and subcontractors. Subcontractors must provide their own job hazard analysis tool to validate their tasks and controls. Subcontractors signing this document merely verify that they participated in the EnSafe T3 safety process.
Name	Bob Herrmann
Company	Hinck

ENSAFE - CORP - SWAP (beta)

Signature	

Employees (2)

Acknowledgement	I understand the hazards and will utilize the controls as noted above. To be signed by all EnSafe personnel and subcontractors. Subcontractors must provide their own job hazard analysis tool to validate their tasks and controls. Subcontractors signing this document merely verify that they participated in the EnSafe T3 safety process.
Name	Gabe Costa
Company	Hinck
Signature	

ENSAFE - CORP - SWAP (beta)

General

Site Emergency Number	911
Project Number Lookup	
Project Number	0888827878
Project	LM Greatneck VFD
Client	Lockheed Martin
Project Manager	Rob McCarthy
Location	Great Neck VFD
Date/Time	03/17/2021
Notice	If any work involves confined spaces, excavations, lock out tag out (LOTO), energized circuits, chemical exposure, or working at unguarded heights >4', contact the Corporate Health and Safety Manager or Senior Safety PM unless an approved HASP is in place.
Work Description	

Activities

Task	Confined space work
Hazards	
Hazards Other	Potential hazardous atmosphere and changing atmospheric conditions.
Controls	
Controls Other	Passive ventilation, 4 gas monitoring throughout work day

Activities (1)

Task	Entering vault
Hazards	Physical - Falls - from height (> 4 feet), Physical - Slip/Trip/Fall - same level
Hazards Other	
Controls	
Controls Other	Use caution and awareness. Lower tools in if possible. Keep large objects off the rim of the vault if they aren't being used.

Activities (2)

Task	Labor
Hazards	
Hazards Other	PVC glue used in vault.
Controls	
Controls Other	Step out to grab fresh air if necessary.

Activities (3)

Task	COVID
Hazards	

ENSAFE - CORP - SWAP (beta)

Hazards Other	Biological
Controls	
Controls Other	Social Distancing and masks

Activities (4)

Task	Electrical work
Hazards	
Hazards Other	Potential live circuits
Controls	
Controls Other	Lock out tag out

Activities (5)

Task	Demolition
Hazards	Physical - Cutting, sawing, shearing, or severing action
Hazards Other	
Controls	
Controls Other	Safety glasses, gloves, safety boots.

SWAP Leader

SWAP Leader Name	Nick McCarthy
Signature	
Comments	
Send Copy SWAP	Rmccarthy@ensafe.com, mgibson@ensafe.com
Include the email addresses, separated by commas, for people you would like to receive a copy of the JHA after submitting.	

Employees

Acknowledgement	I understand the hazards and will utilize the controls as noted above. To be signed by all EnSafe personnel and subcontractors. Subcontractors must provide their own job hazard analysis tool to validate their tasks and controls. Subcontractors signing this document merely verify that they participated in the EnSafe T3 safety process.
Name	Marshall Gibson
Company	ENSAFE
Signature	

Employees (1)

Acknowledgement	I understand the hazards and will utilize the controls as noted above. To be signed by all EnSafe personnel and subcontractors. Subcontractors must provide their own job hazard analysis tool to validate their tasks and controls. Subcontractors signing this document merely verify that they participated in the EnSafe T3 safety process.
Name	Gabe Costa

ENSAFE - CORP - SWAP (beta)

Company	Hinck
Signature	

Employees (2)

Acknowledgement	I understand the hazards and will utilize the controls as noted above. To be signed by all EnSafe personnel and subcontractors. Subcontractors must provide their own job hazard analysis tool to validate their tasks and controls. Subcontractors signing this document merely verify that they participated in the EnSafe T3 safety process.
Name	Bob Herrmann
Company	Hinck
Signature	

Employees (3)

Acknowledgement	I understand the hazards and will utilize the controls as noted above. To be signed by all EnSafe personnel and subcontractors. Subcontractors must provide their own job hazard analysis tool to validate their tasks and controls. Subcontractors signing this document merely verify that they participated in the EnSafe T3 safety process.
Name	Marshall Gibson
Company	ENSAFE
Signature	

Employees (4)

Acknowledgement	I understand the hazards and will utilize the controls as noted above. To be signed by all EnSafe personnel and subcontractors. Subcontractors must provide their own job hazard analysis tool to validate their tasks and controls. Subcontractors signing this document merely verify that they participated in the EnSafe T3 safety process.
Name	Craig Moore
Company	CDM

ENSAFE - CORP - SWAP (beta)

Signature	

Employees (5)

Acknowledgement	I understand the hazards and will utilize the controls as noted above. To be signed by all EnSafe personnel and subcontractors. Subcontractors must provide their own job hazard analysis tool to validate their tasks and controls. Subcontractors signing this document merely verify that they participated in the EnSafe T3 safety process.
Name	Theodore Masters
Company	Envirotrak
Signature	

ENSAFE - CORP - SWAP (beta)

General

Site Emergency Number	911
Project Number Lookup	
Project Number	0888827878
Project	LM Greatneck VFD
Client	Lockheed Martin
Project Manager	Rob McCarthy
Location	Great Neck VFD
Date/Time	03/18/2021
Notice	If any work involves confined spaces, excavations, lock out tag out (LOTO), energized circuits, chemical exposure, or working at unguarded heights >4', contact the Corporate Health and Safety Manager or Senior Safety PM unless an approved HASP is in place.
Work Description	Started pulling wire to feed circuit that run off the sub panel. They also installed unistrut in multiple spots to secure piping. Installed a GFCI as well

Activities

Task	Confined space work
Hazards	Physical - Falls - from height (> 4 feet), Physical - Slip/Trip/Fall - same level
Hazards Other	Potential hazardous atmosphere Tools falling into vault Exiting and entering vault
Controls	
Controls Other	4 gas monitoring throughout work day. Awareness going down ladder Lowering tools into work zone.

Activities (1)

Task	
Hazards	
Hazards Other	
Controls	
Controls Other	

Activities (2)

Task	COVID
Hazards	
Hazards Other	Biological
Controls	
Controls Other	Social distancing and masks

Activities (3)

ENSAFE - CORP - SWAP (beta)

Task	Labor
Hazards	Physical - Cutting, sawing, shearing, or severing action, Physical - Falls - from height (> 4 feet), Physical - Slip/Trip/Fall - same level
Hazards Other	
Controls	Foot : Safety shoes, Head/Face : Safety glasses w/ side shields (ANSI Z71)
Controls Other	

Activities (4)

Task	Electrical Work
Hazards	
Hazards Other	Potential live circuits
Controls	
Controls Other	Lock out tag out

SWAP Leader

SWAP Leader Name	Nick McCarthy
Signature	
Comments	
Send Copy SWAP	Rmccarthy@ensafe.com mgibson@ensafe.com
Include the email addresses, separated by commas, for people you would like to receive a copy of the JHA after submitting.	

Employees

Acknowledgement	I understand the hazards and will utilize the controls as noted above. To be signed by all EnSafe personnel and subcontractors. Subcontractors must provide their own job hazard analysis tool to validate their tasks and controls. Subcontractors signing this document merely verify that they participated in the EnSafe T3 safety process.
Name	Bob Herrmann
Company	Hinck
Signature	

Employees (1)

Acknowledgement	I understand the hazards and will utilize the controls as noted above. To be signed by all EnSafe personnel and subcontractors. Subcontractors must provide their own job hazard analysis tool to validate their tasks and controls. Subcontractors signing this document merely verify that they participated in the EnSafe T3 safety process.

ENSAFE - CORP - SWAP (beta)

Name	Gabe Costa
Company	Hinck
Signature	

Employees (2)

Acknowledgement	I understand the hazards and will utilize the controls as noted above. To be signed by all EnSafe personnel and subcontractors. Subcontractors must provide their own job hazard analysis tool to validate their tasks and controls. Subcontractors signing this document merely verify that they participated in the EnSafe T3 safety process.
Name	Marshall Gibson
Company	ENSAFE
Signature	

Employees (3)

Acknowledgement	I understand the hazards and will utilize the controls as noted above. To be signed by all EnSafe personnel and subcontractors. Subcontractors must provide their own job hazard analysis tool to validate their tasks and controls. Subcontractors signing this document merely verify that they participated in the EnSafe T3 safety process.
Name	Tom Whitaker
Company	Wood
Signature	

ENSAFE - CORP - SWAP (beta)

General

Site Emergency Number	911
Project Number Lookup	
Project Number	0888827878
Project	LM Greatneck VFD
Client	Lockheed Martin
Project Manager	Rob McCarthy
Location	Great Neck VFD
Date/Time	03/19/2021
Notice	If any work involves confined spaces, excavations, lock out tag out (LOTO), energized circuits, chemical exposure, or working at unguarded heights >4', contact the Corporate Health and Safety Manager or Senior Safety PM unless an approved HASP is in place.
Work Description	Continued working in RW-1RD and started demolition in RW-1RS.

Activities

Task	Confined space work
Hazards	
Hazards Other	Potential hazardous environment. Entering and exiting vault Tools falling into vault
Controls	
Controls Other	4 gas meter monitoring. Use caution with the vault ladder. Lower tools into vault.

Activities (1)

Task	Labor
Hazards	Physical - Cutting, sawing, shearing, or severing action
Hazards Other	Environmental- weather (20 degrees, windy)
Controls	Foot : Safety shoes, Head/Face : Safety glasses w/ side shields (ANSI Z71)
Controls Other	If necessary, use car as a warming station to combat the cold.

Activities (2)

Task	COVID
Hazards	
Hazards Other	Biological
Controls	
Controls Other	Social distancing and masks.

Activities (3)

ENSAFE - CORP - SWAP (beta)

Task	Electrical work
Hazards	
Hazards Other	Potential live circuits
Controls	Foot : Safety shoes (Electrical rated)
Controls Other	Lock out tag out.

SWAP Leader

SWAP Leader Name	Nick McCarthy
Signature	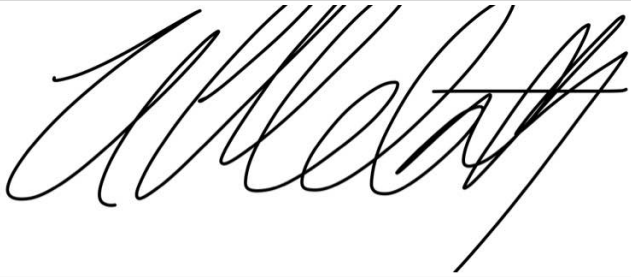
Comments	
Send Copy SWAP	Rmccarthy@ensafe.com, mgibson@ensafe.com
Include the email addresses, separated by commas, for people you would like to receive a copy of the JHA after submitting.	

Employees

Acknowledgement	I understand the hazards and will utilize the controls as noted above. To be signed by all EnSafe personnel and subcontractors. Subcontractors must provide their own job hazard analysis tool to validate their tasks and controls. Subcontractors signing this document merely verify that they participated in the EnSafe T3 safety process.
Name	Marshall Gibson
Company	ENSAFE
Signature	

Employees (1)

Acknowledgement	I understand the hazards and will utilize the controls as noted above. To be signed by all EnSafe personnel and subcontractors. Subcontractors must provide their own job hazard analysis tool to validate their tasks and controls. Subcontractors signing this document merely verify that they participated in the EnSafe T3 safety process.
Name	Gabe Costa
Company	Hinck

ENSAFE - CORP - SWAP (beta)

Signature	

Employees (2)

Acknowledgement	I understand the hazards and will utilize the controls as noted above. To be signed by all EnSafe personnel and subcontractors. Subcontractors must provide their own job hazard analysis tool to validate their tasks and controls. Subcontractors signing this document merely verify that they participated in the EnSafe T3 safety process.
Name	Bob Herrmann
Company	Hinck
Signature	

Employees (3)

Acknowledgement	I understand the hazards and will utilize the controls as noted above. To be signed by all EnSafe personnel and subcontractors. Subcontractors must provide their own job hazard analysis tool to validate their tasks and controls. Subcontractors signing this document merely verify that they participated in the EnSafe T3 safety process.
Name	Craig Moore
Company	CDM
Signature	

ENSAFE - CORP - SWAP (beta)

General

Site Emergency Number	911
Project Number Lookup	
Project Number	0888827878
Project	LM Greatneck VFD
Client	Lockheed Martin
Project Manager	Rob McCarthy
Location	Great Neck VFD
Date/Time	03/22/2021
Notice	If any work involves confined spaces, excavations, lock out tag out (LOTO), energized circuits, chemical exposure, or working at unguarded heights >4', contact the Corporate Health and Safety Manager or Senior Safety PM unless an approved HASP is in place.
Work Description	Plant shutdown, RW-1RD powered up, demo continued in RW-1RS.

Activities

Task	Confined Space work
Hazards	Physical - Falls - from height (> 4 feet)
Hazards Other	Tools falling into vault Potential Hazardous Environment
Controls	
Controls Other	4 gas meter monitoring Lowering tools into vault not keeping tools on the edge of the vault Use caution going down ladder

Activities (1)

Task	Electrical work
Hazards	
Hazards Other	Potential live circuits
Controls	
Controls Other	Lockout tag out

Activities (2)

Task	COVID
Hazards	
Hazards Other	Biological
Controls	
Controls Other	Masks and social distancing

SWAP Leader

ENSAFE - CORP - SWAP (beta)

SWAP Leader Name	Nicholas McCarthy
Signature	
Comments	
Send Copy SWAP	Rmccarthy@ensafe.com , mgibson@ensafe.com
Include the email addresses, separated by commas, for people you would like to receive a copy of the JHA after submitting.	

Employees

Acknowledgement	I understand the hazards and will utilize the controls as noted above. To be signed by all EnSafe personnel and subcontractors. Subcontractors must provide their own job hazard analysis tool to validate their tasks and controls. Subcontractors signing this document merely verify that they participated in the EnSafe T3 safety process.
Name	Marshall Gibson
Company	ENSAFE
Signature	

Employees (1)

Acknowledgement	I understand the hazards and will utilize the controls as noted above. To be signed by all EnSafe personnel and subcontractors. Subcontractors must provide their own job hazard analysis tool to validate their tasks and controls. Subcontractors signing this document merely verify that they participated in the EnSafe T3 safety process.
Name	Gabe Costa
Company	Hinck
Signature	

Employees (2)

Acknowledgement	I understand the hazards and will utilize the controls as noted above. To be signed by all EnSafe personnel and subcontractors. Subcontractors must provide their own job hazard analysis tool to validate their tasks and controls. Subcontractors signing this document merely verify that they participated in the EnSafe T3 safety process.
Name	Bob Herrmann
Company	Hinck

ENSAFE - CORP - SWAP (beta)

Signature	

Employees (3)

Acknowledgement	I understand the hazards and will utilize the controls as noted above. To be signed by all EnSafe personnel and subcontractors. Subcontractors must provide their own job hazard analysis tool to validate their tasks and controls. Subcontractors signing this document merely verify that they participated in the EnSafe T3 safety process.
Name	Paul Lanzillotta
Company	Eagle Environmental
Signature	

Employees (4)

Acknowledgement	I understand the hazards and will utilize the controls as noted above. To be signed by all EnSafe personnel and subcontractors. Subcontractors must provide their own job hazard analysis tool to validate their tasks and controls. Subcontractors signing this document merely verify that they participated in the EnSafe T3 safety process.
Name	Mike Hagan
Company	Eagle
Signature	

ENSAFE - CORP - SWAP (beta)

General

Site Emergency Number	911
Project Number Lookup	
Project Number	0888827878
Project	LM Great Neck VFD
Client	Lockheed Martin
Project Manager	Rob McCarthy
Location	Great Neck VFD
Date/Time	03/23/2021
Notice	If any work involves confined spaces, excavations, lock out tag out (LOTO), energized circuits, chemical exposure, or working at unguarded heights >4', contact the Corporate Health and Safety Manager or Senior Safety PM unless an approved HASP is in place.
Work Description	Demolition of what they can continued in RW-1RS.

Activities

Task	Electrical Work
Hazards	
Hazards Other	Potential live circuits
Controls	
Controls Other	Lockout, tag out

Activities (1)

Task	Confined space work
Hazards	Physical - Falls - from height (> 4 feet)
Hazards Other	Tools falling into vault. Potential Hazardous atmosphere.
Controls	
Controls Other	Use caution going down ladder. Lower tools into vault. Don't keep tools around vault's rim.

Activities (2)

Task	COVID
Hazards	
Hazards Other	Biological
Controls	
Controls Other	Social distance and masks

SWAP Leader

SWAP Leader Name	Nicholas McCarthy

ENSAFE - CORP - SWAP (beta)

Signature	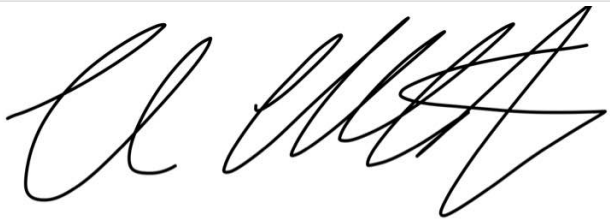
Comments	
Send Copy SWAP	
Include the email addresses, separated by commas, for people you would like to receive a copy of the JHA after submitting.	

Employees

Acknowledgement	I understand the hazards and will utilize the controls as noted above. To be signed by all EnSafe personnel and subcontractors. Subcontractors must provide their own job hazard analysis tool to validate their tasks and controls. Subcontractors signing this document merely verify that they participated in the EnSafe T3 safety process.
Name	Bob Herrmann
Company	Hinck
Signature	

Employees (1)

Acknowledgement	I understand the hazards and will utilize the controls as noted above. To be signed by all EnSafe personnel and subcontractors. Subcontractors must provide their own job hazard analysis tool to validate their tasks and controls. Subcontractors signing this document merely verify that they participated in the EnSafe T3 safety process.
Name	Gabe Costa
Company	Hinck
Signature	

Employees (2)

ENSAFE - CORP - SWAP (beta)

Acknowledgement	I understand the hazards and will utilize the controls as noted above. To be signed by all EnSafe personnel and subcontractors. Subcontractors must provide their own job hazard analysis tool to validate their tasks and controls. Subcontractors signing this document merely verify that they participated in the EnSafe T3 safety process.
Name	Jim Wilkinson
Company	Envirotrak
Signature	

Client - LMCO - Great Neck - SWAP (beta)

General

Site Emergency Number	
Project Number Lookup	
Project Number	088827878
Project	LM Greatneck VFD
Client	Lockheed Martin
Project Manager	Rob McCarthy
Location	Lake Success, NY
Date/Time	03/24/2021
Notice	If any work involves confined spaces, excavations, lock out tag out (LOTO), energized circuits, chemical exposure, or working at unguarded heights >4', contact the Corporate Health and Safety Manager or Senior Safety PM unless an approved HASP is in place.
Work Description	Fiber connections swapper over to temp panel. RW-1RS power is locked out and tagged. Hinck continues demolition.

Activities

Task	Electrical work
Hazards	
Hazards Other	Potential live circuits
Controls	
Controls Other	Lock out, tag out

Activities (1)

Task	Confined space work
Hazards	
Hazards Other	Potential hazardous environment. Tools falling into vault. Entering and exiting vault.
Controls	
Controls Other	4 gas monitoring. Lower tools in vault. Use caution while using ladder.

Activities (2)

Task	Demolition
Hazards	
Hazards Other	Cutting, drillling
Controls	
Controls Other	Safety glasses, gloves and boots with steel toe.

Activities (3)

Client - LMCO - Great Neck - SWAP (beta)

Task	COVID
Hazards	
Hazards Other	Biological
Controls	
Controls Other	Masks and social distancing

SWAP Leader

SWAP Leader Name	Nick McCarthy
Signature	
Comments	
Send Copy SWAP	rmccarthy@ensafe.com , mgibson@ensafe.com
Include the email addresses, separated by commas, for people you would like to receive a copy of the JHA after submitting.	

Employees

Acknowledgement	I understand the hazards and will utilize the controls as noted above. To be signed by all EnSafe personnel and subcontractors. Subcontractors must provide their own job hazard analysis tool to validate their tasks and controls. Subcontractors signing this document merely verify that they participated in the EnSafe T3 safety process.
Name	Bob Herrmann
Company	Hinck
Signature	

Employees (1)

Acknowledgement	I understand the hazards and will utilize the controls as noted above. To be signed by all EnSafe personnel and subcontractors. Subcontractors must provide their own job hazard analysis tool to validate their tasks and controls. Subcontractors signing this document merely verify that they participated in the EnSafe T3 safety process.
Name	Gabe Costa
Company	Hinck

Client - LMCO - Great Neck - SWAP (beta)

Signature	

Employees (2)

Acknowledgement	I understand the hazards and will utilize the controls as noted above. To be signed by all EnSafe personnel and subcontractors. Subcontractors must provide their own job hazard analysis tool to validate their tasks and controls. Subcontractors signing this document merely verify that they participated in the EnSafe T3 safety process.
Name	Mike Hagan
Company	Eagle
Signature	

Employees (3)

Acknowledgement	I understand the hazards and will utilize the controls as noted above. To be signed by all EnSafe personnel and subcontractors. Subcontractors must provide their own job hazard analysis tool to validate their tasks and controls. Subcontractors signing this document merely verify that they participated in the EnSafe T3 safety process.
Name	Craig Moore
Company	CDM Smith
Signature	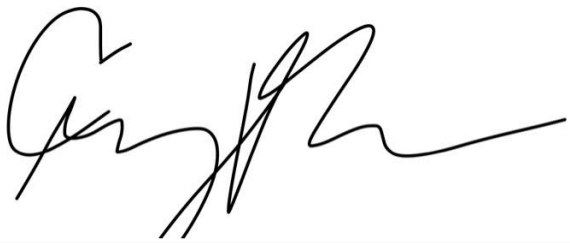

Client - LMCO - Great Neck - SWAP (beta)

General

Site Emergency Number	
Project Number Lookup	
Project Number	0888827878
Project	LM Greatneck VFD
Client	Lockheed Martin
Project Manager	Rob McCarthy
Location	Lake Success, NY
Date/Time	03/25/2021
Notice	If any work involves confined spaces, excavations, lock out tag out (LOTO), energized circuits, chemical exposure, or working at unguarded heights >4', contact the Corporate Health and Safety Manager or Senior Safety PM unless an approved HASP is in place.
Work Description	Replacing unistrut behind the power panel in RW-1RS.

Activities

Task	Electrical work
Hazards	
Hazards Other	Potential live circuits
Controls	
Controls Other	Lock out tag out .

Activities (1)

Task	Confined space work
Hazards	
Hazards Other	Potential hazardous atmosphere. Falling into vault Tools falling into vault
Controls	
Controls Other	4 gas monitoring throughout work day. Use caution entering and exiting vault Don't place tools around rim of vault.

Activities (2)

Task	Demolition
Hazards	
Hazards Other	Cutting, drilling, grinding.
Controls	
Controls Other	Safety glasses, gloves and work boots.

Activities (3)

Client - LMCO - Great Neck - SWAP (beta)

Task	COVID
Hazards	
Hazards Other	Biological
Controls	
Controls Other	Masks and social distancing.

SWAP Leader

SWAP Leader Name	Nick McCarthy
Signature	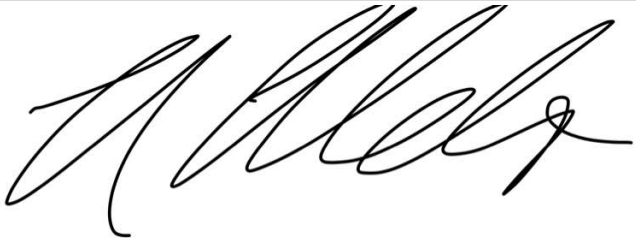
Comments	
Send Copy SWAP	Rmccarthy@ensafe.com mgibson@ensafe.com
Include the email addresses, separated by commas, for people you would like to receive a copy of the JHA after submitting.	

Employees

Acknowledgement	I understand the hazards and will utilize the controls as noted above. To be signed by all EnSafe personnel and subcontractors. Subcontractors must provide their own job hazard analysis tool to validate their tasks and controls. Subcontractors signing this document merely verify that they participated in the EnSafe T3 safety process.
Name	Gabe Costa
Company	Hinck
Signature	

Employees (1)

Acknowledgement	I understand the hazards and will utilize the controls as noted above. To be signed by all EnSafe personnel and subcontractors. Subcontractors must provide their own job hazard analysis tool to validate their tasks and controls. Subcontractors signing this document merely verify that they participated in the EnSafe T3 safety process.
Name	Bob Herrmann
Company	Hinck

Client - LMCO - Great Neck - SWAP (beta)

Signature	

Employees (2)

Acknowledgement	I understand the hazards and will utilize the controls as noted above. To be signed by all EnSafe personnel and subcontractors. Subcontractors must provide their own job hazard analysis tool to validate their tasks and controls. Subcontractors signing this document merely verify that they participated in the EnSafe T3 safety process.
Name	Marshall Gibson
Company	ENSAFE
Signature	

Client - LMCO - Great Neck - SWAP (beta)

General

Site Emergency Number	
Project Number Lookup	
Project Number	088827878
Project	LM Greatneck VFD
Client	Lockheed Martin
Project Manager	Rob McCarthy
Location	Lake Success, NY
Date/Time	03/30/2021
Notice	If any work involves confined spaces, excavations, lock out tag out (LOTO), energized circuits, chemical exposure, or working at unguarded heights >4', contact the Corporate Health and Safety Manager or Senior Safety PM unless an approved HASP is in place.
Work Description	Ran conduit and unistrut.

Activities

Task	Electrical Work
Hazards	
Hazards Other	Potential live circuits.
Controls	
Controls Other	Lock out, tag out.

Activities (1)

Task	Confined space work
Hazards	
Hazards Other	Potential hazardous atmosphere. Entering and exiting the vault (ladder use). Tools falling into vault.
Controls	
Controls Other	4 gas monitoring throughout work day. Use caution and awareness when entering and exiting the vault. Lower tools into vault.

Activities (2)

Task	Demolition
Hazards	
Hazards Other	Cutting, sawing, grinding.
Controls	
Controls Other	Safety boots, eye protection and gloves.

Client - LMCO - Great Neck - SWAP (beta)

Activities (3)

Task	COVID
Hazards	
Hazards Other	Biological.
Controls	
Controls Other	Social distancing and masks.

SWAP Leader

SWAP Leader Name	Nick McCarthy
Signature	
Comments	
Send Copy SWAP	Rmccarthy@ensafe.com mgibson@ensafe.com
Include the email addresses, separated by commas, for people you would like to receive a copy of the JHA after submitting.	

Employees

Acknowledgement	I understand the hazards and will utilize the controls as noted above. To be signed by all EnSafe personnel and subcontractors. Subcontractors must provide their own job hazard analysis tool to validate their tasks and controls. Subcontractors signing this document merely verify that they participated in the EnSafe T3 safety process.
Name	Bob Herrmann
Company	Hinck
Signature	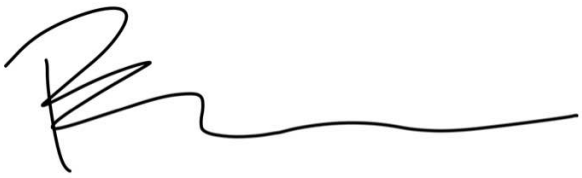

Employees (1)

Acknowledgement	I understand the hazards and will utilize the controls as noted above. To be signed by all EnSafe personnel and subcontractors. Subcontractors must provide their own job hazard analysis tool to validate their tasks and controls. Subcontractors signing this document merely verify that they participated in the EnSafe T3 safety process.
Name	Gabe Costa

Client - LMCO - Great Neck - SWAP (beta)

Company	Hinck
Signature	

Employees (2)

Acknowledgement	I understand the hazards and will utilize the controls as noted above. To be signed by all EnSafe personnel and subcontractors. Subcontractors must provide their own job hazard analysis tool to validate their tasks and controls. Subcontractors signing this document merely verify that they participated in the EnSafe T3 safety process.
Name	Paul Lanzillotta
Company	Eagle Environmental
Signature	

Client - LMCO - Great Neck - SWAP (beta)

General

Site Emergency Number	
Project Number Lookup	
Project Number	0888827878
Project	LM Greatneck VFD
Client	Lockheed Martin
Project Manager	Rob McCarthy
Location	Lake Success, NY
Date/Time	03/31/2021
Notice	If any work involves confined spaces, excavations, lock out tag out (LOTO), energized circuits, chemical exposure, or working at unguarded heights >4', contact the Corporate Health and Safety Manager or Senior Safety PM unless an approved HASP is in place.
Work Description	Core drilling at Rw-100

Activities

Task	Electrical work
Hazards	
Hazards Other	Potential live circuits
Controls	
Controls Other	Lock out, tag out.

Activities (1)

Task	Confined space work
Hazards	
Hazards Other	Potential hazardous atmosphere. Entering and exiting vault. Tools falling in vault.
Controls	
Controls Other	4 gas monitoring throughout work day. Use awareness when on ladder to vault. Lower tools into vault and do not place them on the rim of the vault.

Activities (2)

Task	Core Boring
Hazards	
Hazards Other	Sawing, cutting, and grinding. Slips, trips, falls.
Controls	
Controls Other	Eye protection, safety boots and gloves . Use awareness.

Client - LMCO - Great Neck - SWAP (beta)

Activities (3)

Task	COVID
Hazards	
Hazards Other	Biological
Controls	
Controls Other	Social distancing and masks

SWAP Leader

SWAP Leader Name	Nicholas McCarthy
Signature	
Comments	
Send Copy SWAP	Rmccarthy@ensafe.com mgibson@ensafe.com
Include the email addresses, separated by commas, for people you would like to receive a copy of the JHA after submitting.	

Employees

Acknowledgement	I understand the hazards and will utilize the controls as noted above. To be signed by all EnSafe personnel and subcontractors. Subcontractors must provide their own job hazard analysis tool to validate their tasks and controls. Subcontractors signing this document merely verify that they participated in the EnSafe T3 safety process.
Name	Bob Herrmann
Company	Hinck
Signature	

Client - LMCO - Great Neck - SWAP (beta)

General

Site Emergency Number	
Project Number Lookup	
Project Number	0888827878
Project	LM Greatneck VFD
Client	Lockheed Martin
Project Manager	Rob McCarthy
Location	Lake Success, NY
Date/Time	04/01/2021
Notice	If any work involves confined spaces, excavations, lock out tag out (LOTO), energized circuits, chemical exposure, or working at unguarded heights >4', contact the Corporate Health and Safety Manager or Senior Safety PM unless an approved HASP is in place.
Work Description	Piping for VFD at RW-100.

Activities

Task	Confined Space work
Hazards	
Hazards Other	Potential hazardous atmosphere. Entering and exiting vault. Tools falling into vault.
Controls	
Controls Other	4 gas monitoring throughout work day. Use caution when on vaults's ladder. Lower tools into vault when necessary.

Activities (1)

Task	Electrical Work
Hazards	
Hazards Other	Potential live circuits.
Controls	
Controls Other	Lockout, tag out.

Activities (2)

Task	General labor
Hazards	
Hazards Other	Slips,trips,falls .
Controls	
Controls Other	Use caution and awareness when in work area.

Activities (3)

Client - LMCO - Great Neck - SWAP (beta)

Task	COVID
Hazards	
Hazards Other	Biological
Controls	
Controls Other	Masks and social distancing.

SWAP Leader

SWAP Leader Name	Nick McCarthy
Signature	
Comments	
Send Copy SWAP	Rmccarthy@ensafe.com
Include the email addresses, separated by commas, for people you would like to receive a copy of the JHA after submitting.	

Employees

Acknowledgement	I understand the hazards and will utilize the controls as noted above. To be signed by all EnSafe personnel and subcontractors. Subcontractors must provide their own job hazard analysis tool to validate their tasks and controls. Subcontractors signing this document merely verify that they participated in the EnSafe T3 safety process.
Name	Bob Herrmann
Company	Hinck
Signature	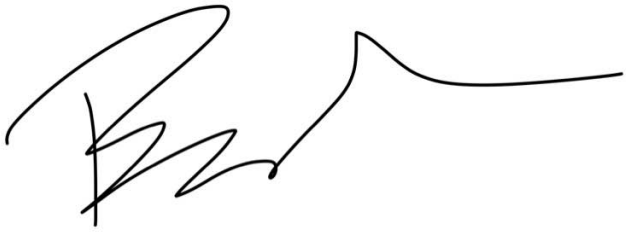

Employees (1)

Acknowledgement	I understand the hazards and will utilize the controls as noted above. To be signed by all EnSafe personnel and subcontractors. Subcontractors must provide their own job hazard analysis tool to validate their tasks and controls. Subcontractors signing this document merely verify that they participated in the EnSafe T3 safety process.
Name	Gabe Costa
Company	Hinck

Client - LMCO - Great Neck - SWAP (beta)

Signature	

Client - LMCO - Great Neck - SWAP (beta)

General

Site Emergency Number	911
Project Number Lookup	
Project Number	0888827878
Project	VFD - OU1
Client	Lockheed Martin
Project Manager	Rob McCarthy
Location	OU1
Date/Time	04/01/2021
Notice	If any work involves confined spaces, excavations, lock out tag out (LOTO), energized circuits, chemical exposure, or working at unguarded heights >4', contact the Corporate Health and Safety Manager or Senior Safety PM unless an approved HASP is in place.
Work Description	Building Inspector site meeting

Activities

Task	Site meeting
Hazards	Physical - Slip/Trip/Fall - same level
Hazards Other	
Controls	Foot : Safety shoes
Controls Other	

SWAP Leader

SWAP Leader Name	Marshall Gibson
Signature	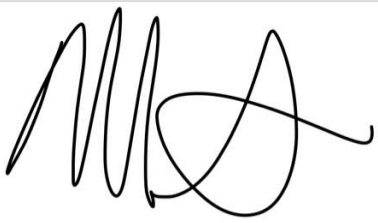
Comments	
Send Copy SWAP	Rmccarthy@ensafe.com
Include the email addresses, separated by commas, for people you would like to receive a copy of the JHA after submitting.	

Employees

Client - LMCO - Great Neck - SWAP (beta)

Acknowledgement	I understand the hazards and will utilize the controls as noted above. To be signed by all EnSafe personnel and subcontractors. Subcontractors must provide their own job hazard analysis tool to validate their tasks and controls. Subcontractors signing this document merely verify that they participated in the EnSafe T3 safety process.
Name	Jerry DeLucia
Company	N. Hempstead Building Inspector
Signature	

Client - LMCO - Great Neck - SWAP (beta)

General

Site Emergency Number	
Project Number Lookup	
Project Number	0888802878
Project	LM Greatneck VFD OU2
Client	Lockheed Martin
Project Manager	Rob McCarthy
Location	Lake Success, NY
Date/Time	04/02/2021
Notice	If any work involves confined spaces, excavations, lock out tag out (LOTO), energized circuits, chemical exposure, or working at unguarded heights >4', contact the Corporate Health and Safety Manager or Senior Safety PM unless an approved HASP is in place.
Work Description	Demo continued on EW-1.

Activities

Task	Confined Space Work
Hazards	
Hazards Other	Potential hazardous atmosphere. Tools falling into vault. Entering and exiting vault.
Controls	
Controls Other	4 gas monitoring throughout workday. Lower tools into vault when necessary. Use caution while using ladder to enter and exit vault.

Activities (1)

Task	Demolition
Hazards	
Hazards Other	Cutting, sawing, grinding
Controls	
Controls Other	Safety glasses, boots and gloves.

Activities (2)

Task	electrical work
Hazards	
Hazards Other	Potential live circuits.
Controls	
Controls Other	Lock out, tag out.

Activities (3)

Client - LMCO - Great Neck - SWAP (beta)

Task	COVID
Hazards	
Hazards Other	Biological
Controls	
Controls Other	Social distancing and masks.

SWAP Leader

SWAP Leader Name	Nicholas McCarthy
Signature	
Comments	
Send Copy SWAP	Rmccarthy@ensafe.com
Include the email addresses, separated by commas, for people you would like to receive a copy of the JHA after submitting.	

Employees

Acknowledgement	I understand the hazards and will utilize the controls as noted above. To be signed by all EnSafe personnel and subcontractors. Subcontractors must provide their own job hazard analysis tool to validate their tasks and controls. Subcontractors signing this document merely verify that they participated in the EnSafe T3 safety process.
Name	Bob Herrmann
Company	Hinck
Signature	

Employees (1)

Acknowledgement	I understand the hazards and will utilize the controls as noted above. To be signed by all EnSafe personnel and subcontractors. Subcontractors must provide their own job hazard analysis tool to validate their tasks and controls. Subcontractors signing this document merely verify that they participated in the EnSafe T3 safety process.
Name	Gabe Costa
Company	Hinck

Client - LMCO - Great Neck - SWAP (beta)

Signature	

Employees (2)

Acknowledgement	I understand the hazards and will utilize the controls as noted above. To be signed by all EnSafe personnel and subcontractors. Subcontractors must provide their own job hazard analysis tool to validate their tasks and controls. Subcontractors signing this document merely verify that they participated in the EnSafe T3 safety process.
Name	Tom Whitaker
Company	Wood.
Signature	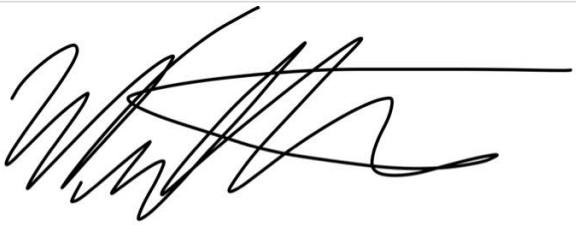

Client - LMCO - Great Neck - SWAP (beta)

General

Site Emergency Number	
Project Number Lookup	
Project Number	088827878-11a
Project	LM Greatneck VFD OU1
Client	Lockheed Martin
Project Manager	Rob McCarthy
Location	Lake Success, NY
Date/Time	04/05/2021
Notice	If any work involves confined spaces, excavations, lock out tag out (LOTO), energized circuits, chemical exposure, or working at unguarded heights >4', contact the Corporate Health and Safety Manager or Senior Safety PM unless an approved HASP is in place.
Work Description	EW-1 goes offline. Fiber communication is swapped to temp box. Demolition continues.

Activities

Task	Electrical work
Hazards	
Hazards Other	Potential live circuits
Controls	
Controls Other	Lock out, tag out.

Activities (1)

Task	Confined space work
Hazards	
Hazards Other	Entering and exiting vault. Potential hazardous atmosphere. Tools Falling into vault.
Controls	
Controls Other	Use caution when using vaults ladder. 4 gas monitoring throughout work day. Lower tools into vault when necessary.

Activities (2)

Task	Demolition
Hazards	
Hazards Other	Cutting, grinding and sawing.
Controls	
Controls Other	Safety glasses, boots and gloves.

Activities (3)

Client - LMCO - Great Neck - SWAP (beta)

Task	COVID
Hazards	
Hazards Other	Biological
Controls	
Controls Other	Social distancing and masks.

SWAP Leader

SWAP Leader Name	Nicholas McCarthy
Signature	
Comments	
Send Copy SWAP	Rmccarthy@ensafe.com
Include the email addresses, separated by commas, for people you would like to receive a copy of the JHA after submitting.	

Employees

Acknowledgement	I understand the hazards and will utilize the controls as noted above. To be signed by all EnSafe personnel and subcontractors. Subcontractors must provide their own job hazard analysis tool to validate their tasks and controls. Subcontractors signing this document merely verify that they participated in the EnSafe T3 safety process.
Name	Gabe Costa
Company	Hinck
Signature	

Employees (1)

Acknowledgement	I understand the hazards and will utilize the controls as noted above. To be signed by all EnSafe personnel and subcontractors. Subcontractors must provide their own job hazard analysis tool to validate their tasks and controls. Subcontractors signing this document merely verify that they participated in the EnSafe T3 safety process.
Name	Hinck
Company	Bob Herrmann

Client - LMCO - Great Neck - SWAP (beta)

Signature	

Employees (2)

Acknowledgement	I understand the hazards and will utilize the controls as noted above. To be signed by all EnSafe personnel and subcontractors. Subcontractors must provide their own job hazard analysis tool to validate their tasks and controls. Subcontractors signing this document merely verify that they participated in the EnSafe T3 safety process.
Name	Paul Lanzilotta
Company	Eagle
Signature	

Client - LMCO - Great Neck - SWAP (beta)

General

Site Emergency Number	
Project Number Lookup	
Project Number	0888827878-11a
Project	LM Greatneck VFD OU1
Client	Lockheed Martin
Project Manager	Rob McCarthy
Location	Lake Success, NY
Date/Time	04/06/2021
Notice	If any work involves confined spaces, excavations, lock out tag out (LOTO), energized circuits, chemical exposure, or working at unguarded heights >4', contact the Corporate Health and Safety Manager or Senior Safety PM unless an approved HASP is in place.
Work Description	Hinck continues installing PVC in EW-1. Envirotrak makes asphalt saw cut at OU1 for harmonic filter as well as fixes damaged lawn at RW-1RD

Activities

Task	Confined Space work-Hinck
Hazards	
Hazards Other	Potential Hazardous atmosphere. Tools falling in vault. Entering and exiting vault.
Controls	
Controls Other	4 gas monitoring throughout work day. Don't place tools around rim of vault and lower them in when necessary. Use caution while using the vault's ladder.

Activities (1)

Task	Asphalt saw cutting- Envirotrak
Hazards	
Hazards Other	Cutting, sawing, grinding.
Controls	
Controls Other	Safety glasses, boots and gloves.

Activities (2)

Task	Electrical work.
Hazards	
Hazards Other	Potential live circuits.
Controls	
Controls Other	Lock out, tag out.

Activities (3)

Client - LMCO - Great Neck - SWAP (beta)

Task	COVID
Hazards	
Hazards Other	Biological
Controls	
Controls Other	Masks and social distancing.

SWAP Leader

SWAP Leader Name	Nicholas McCarthy
Signature	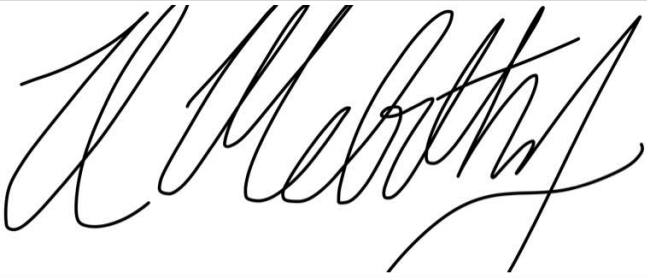
Comments	
Send Copy SWAP	Rmccarthy@ensafe.com
Include the email addresses, separated by commas, for people you would like to receive a copy of the JHA after submitting.	

Employees

Acknowledgement	I understand the hazards and will utilize the controls as noted above. To be signed by all EnSafe personnel and subcontractors. Subcontractors must provide their own job hazard analysis tool to validate their tasks and controls. Subcontractors signing this document merely verify that they participated in the EnSafe T3 safety process.
Name	Gabe Costa
Company	Hinck
Signature	

Employees (1)

Acknowledgement	I understand the hazards and will utilize the controls as noted above. To be signed by all EnSafe personnel and subcontractors. Subcontractors must provide their own job hazard analysis tool to validate their tasks and controls. Subcontractors signing this document merely verify that they participated in the EnSafe T3 safety process.
Name	Bob Herrmann
Company	Hinck

Client - LMCO - Great Neck - SWAP (beta)

Signature	

Employees (2)

Acknowledgement	I understand the hazards and will utilize the controls as noted above. To be signed by all EnSafe personnel and subcontractors. Subcontractors must provide their own job hazard analysis tool to validate their tasks and controls. Subcontractors signing this document merely verify that they participated in the EnSafe T3 safety process.
Name	Ken Davies
Company	Envirotrak
Signature	

Employees (3)

Acknowledgement	I understand the hazards and will utilize the controls as noted above. To be signed by all EnSafe personnel and subcontractors. Subcontractors must provide their own job hazard analysis tool to validate their tasks and controls. Subcontractors signing this document merely verify that they participated in the EnSafe T3 safety process.
Name	Stephen smith
Company	Envirotrac
Signature	

Employees (4)

Acknowledgement	I understand the hazards and will utilize the controls as noted above. To be signed by all EnSafe personnel and subcontractors. Subcontractors must provide their own job hazard analysis tool to validate their tasks and controls. Subcontractors signing this document merely verify that they participated in the EnSafe T3 safety process.
Name	Mike Alliegro
Company	Envirotrak

Client - LMCO - Great Neck - SWAP (beta)

Signature	

Employees (5)

Acknowledgement	I understand the hazards and will utilize the controls as noted above. To be signed by all EnSafe personnel and subcontractors. Subcontractors must provide their own job hazard analysis tool to validate their tasks and controls. Subcontractors signing this document merely verify that they participated in the EnSafe T3 safety process.
Name	Tom Whitaker
Company	Wood
Signature	

Client - LMCO - Great Neck - SWAP (beta)

General

Site Emergency Number	
Project Number Lookup	
Project Number	0888827878-11a
Project	LM Greatneck VFD
Client	Lockheed Martin
Project Manager	Rob McCarthy
Location	Lake Success, NY
Date/Time	04/07/2021
Notice	If any work involves confined spaces, excavations, lock out tag out (LOTO), energized circuits, chemical exposure, or working at unguarded heights >4', contact the Corporate Health and Safety Manager or Senior Safety PM unless an approved HASP is in place.
Work Description	PVC install, plant shutdown and fiber swap over.

Activities

Task	Electrical Work
Hazards	
Hazards Other	Potential live circuits.
Controls	
Controls Other	Lock out, tag out.

Activities (1)

Task	Confined space entry
Hazards	
Hazards Other	Tools falling into vault. Entering and exiting vault. Potential hazardous atmosphere.
Controls	
Controls Other	Lower tools into vault when necessary. Use caution when using vaults ladder. 4 gas monitoring throughout work day.

Activities (2)

Task	Demolition
Hazards	
Hazards Other	Cutting, grinding, sawing.
Controls	
Controls Other	Safety boots, gloves and glasses.

Activities (3)

Client - LMCO - Great Neck - SWAP (beta)

Task	COVID
Hazards	
Hazards Other	Biological
Controls	
Controls Other	Social distancing and masks.

SWAP Leader

SWAP Leader Name	Nick McCarthy
Signature	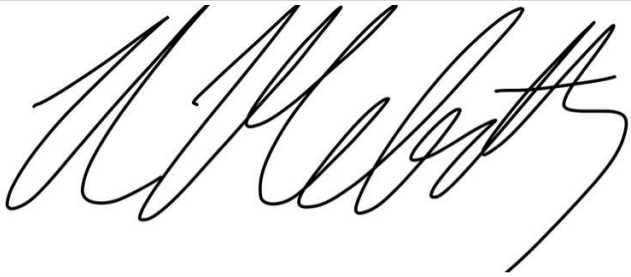
Comments	
Send Copy SWAP	Rmccarthy@ensafe.com
Include the email addresses, separated by commas, for people you would like to receive a copy of the JHA after submitting.	

Employees

Acknowledgement	I understand the hazards and will utilize the controls as noted above. To be signed by all EnSafe personnel and subcontractors. Subcontractors must provide their own job hazard analysis tool to validate their tasks and controls. Subcontractors signing this document merely verify that they participated in the EnSafe T3 safety process.
Name	Bob Herrmann
Company	Hinck
Signature	

Employees (1)

Acknowledgement	I understand the hazards and will utilize the controls as noted above. To be signed by all EnSafe personnel and subcontractors. Subcontractors must provide their own job hazard analysis tool to validate their tasks and controls. Subcontractors signing this document merely verify that they participated in the EnSafe T3 safety process.
Name	Craig Moore
Company	CDM smith

Client - LMCO - Great Neck - SWAP (beta)

Signature	

Employees (2)

Acknowledgement	I understand the hazards and will utilize the controls as noted above. To be signed by all EnSafe personnel and subcontractors. Subcontractors must provide their own job hazard analysis tool to validate their tasks and controls. Subcontractors signing this document merely verify that they participated in the EnSafe T3 safety process.
Name	Paul Lanzilotta
Company	Eagle
Signature	

Employees (3)

Acknowledgement	I understand the hazards and will utilize the controls as noted above. To be signed by all EnSafe personnel and subcontractors. Subcontractors must provide their own job hazard analysis tool to validate their tasks and controls. Subcontractors signing this document merely verify that they participated in the EnSafe T3 safety process.
Name	Mike Hagan
Company	Eagle
Signature	

Employees (4)

Acknowledgement	I understand the hazards and will utilize the controls as noted above. To be signed by all EnSafe personnel and subcontractors. Subcontractors must provide their own job hazard analysis tool to validate their tasks and controls. Subcontractors signing this document merely verify that they participated in the EnSafe T3 safety process.
Name	Gabe Costa
Company	Hinck

Client - LMCO - Great Neck - SWAP (beta)

Signature	

Client - LMCO - Great Neck - SWAP (beta)

General

Site Emergency Number	911
Project Number Lookup	
Project Number	0888827878
Project	VFD
Client	Lockheed Martin
Project Manager	Rob McCarthy
Location	OU1 and OU2
Date/Time	04/07/2021
Notice	If any work involves confined spaces, excavations, lock out tag out (LOTO), energized circuits, chemical exposure, or working at unguarded heights >4', contact the Corporate Health and Safety Manager or Senior Safety PM unless an approved HASP is in place.
Work Description	Pouring concrete

Activities

Task	Pour concrete
Hazards	Physical - Mobile equipment traffic, Physical - Pinch points or moving parts, Physical - Slip/Trip/Fall - same level
Hazards Other	
Controls	Foot : Safety shoes, Hand : Gloves - Leather, Head/Face : Safety glasses w/ side shields (ANSI Z71), Head/Face : Hard hat, Hearing : Ear Plugs
Controls Other	Hi-vis vest

Activities (1)

Task	Pour Concrete
Hazards	
Hazards Other	COVID
Controls	
Controls Other	Social distancing Masks if working within 6ft

SWAP Leader

SWAP Leader Name	Marshall Gibson
Signature	

Client - LMCO - Great Neck - SWAP (beta)

Comments	
Send Copy SWAP	Rmccarthy@ensafe.com
Include the email addresses, separated by commas, for people you would like to receive a copy of the JHA after submitting.	

Employees

Acknowledgement	I understand the hazards and will utilize the controls as noted above. To be signed by all EnSafe personnel and subcontractors. Subcontractors must provide their own job hazard analysis tool to validate their tasks and controls. Subcontractors signing this document merely verify that they participated in the EnSafe T3 safety process.
Name	Kenny Davies
Company	Envirotrac
Signature	

Employees (1)

Acknowledgement	I understand the hazards and will utilize the controls as noted above. To be signed by all EnSafe personnel and subcontractors. Subcontractors must provide their own job hazard analysis tool to validate their tasks and controls. Subcontractors signing this document merely verify that they participated in the EnSafe T3 safety process.
Name	Steve Smith
Company	Envirotrac
Signature	

Employees (2)

Acknowledgement	I understand the hazards and will utilize the controls as noted above. To be signed by all EnSafe personnel and subcontractors. Subcontractors must provide their own job hazard analysis tool to validate their tasks and controls. Subcontractors signing this document merely verify that they participated in the EnSafe T3 safety process.
Name	Mike Alliegro
Company	Envirotrac

Client - LMCO - Great Neck - SWAP (beta)

Signature	

Employees (3)

Acknowledgement	I understand the hazards and will utilize the controls as noted above. To be signed by all EnSafe personnel and subcontractors. Subcontractors must provide their own job hazard analysis tool to validate their tasks and controls. Subcontractors signing this document merely verify that they participated in the EnSafe T3 safety process.
Name	Nick Zarcone
Company	Envirotrac
Signature	

Employees (4)

Acknowledgement	I understand the hazards and will utilize the controls as noted above. To be signed by all EnSafe personnel and subcontractors. Subcontractors must provide their own job hazard analysis tool to validate their tasks and controls. Subcontractors signing this document merely verify that they participated in the EnSafe T3 safety process.
Name	Craig Moore
Company	CDM Smith
Signature	

Client - LMCO - Great Neck - SWAP (beta)

General

Site Emergency Number	
Project Number Lookup	
Project Number	0888827878-11a
Project	LM Greatneck VFD OU1
Client	Lockheed Martin
Project Manager	Rob McCarthy
Location	Lake Success, NY
Date/Time	04/08/2021
Notice	If any work involves confined spaces, excavations, lock out tag out (LOTO), energized circuits, chemical exposure, or working at unguarded heights >4', contact the Corporate Health and Safety Manager or Senior Safety PM unless an approved HASP is in place.
Work Description	PVC conduit and receptacle installation. Supervisory test operations by PES.

Activities

Task	Electrical Work
Hazards	
Hazards Other	Potential Live circuits
Controls	
Controls Other	Lock out, tag out.

Activities (1)

Task	Confined space work.
Hazards	
Hazards Other	Potential hazardous atmosphere. Tools falling into vault. Entering and exiting vault.
Controls	
Controls Other	4 gas monitoring throughout work day. Lower tools into vault when necessary. Use caution while using ladder.

Activities (2)

Task	COVID
Hazards	
Hazards Other	Biological.
Controls	
Controls Other	Social distancing and masks.

SWAP Leader

Client - LMCO - Great Neck - SWAP (beta)

SWAP Leader Name	Nicholas McCarthy
Signature	
Comments	
Send Copy SWAP	Rmccarthy@ensafe.com
Include the email addresses, separated by commas, for people you would like to receive a copy of the JHA after submitting.	

Employees

Acknowledgement	I understand the hazards and will utilize the controls as noted above. To be signed by all EnSafe personnel and subcontractors. Subcontractors must provide their own job hazard analysis tool to validate their tasks and controls. Subcontractors signing this document merely verify that they participated in the EnSafe T3 safety process.
Name	Gabe Costa
Company	Hinck
Signature	

Employees (1)

Acknowledgement	I understand the hazards and will utilize the controls as noted above. To be signed by all EnSafe personnel and subcontractors. Subcontractors must provide their own job hazard analysis tool to validate their tasks and controls. Subcontractors signing this document merely verify that they participated in the EnSafe T3 safety process.
Name	Bob Herrmann
Company	Hinck
Signature	

Employees (2)

Client - LMCO - Great Neck - SWAP (beta)

Acknowledgement	I understand the hazards and will utilize the controls as noted above. To be signed by all EnSafe personnel and subcontractors. Subcontractors must provide their own job hazard analysis tool to validate their tasks and controls. Subcontractors signing this document merely verify that they participated in the EnSafe T3 safety process.
Name	Tom Whitaker
Company	Wood
Signature	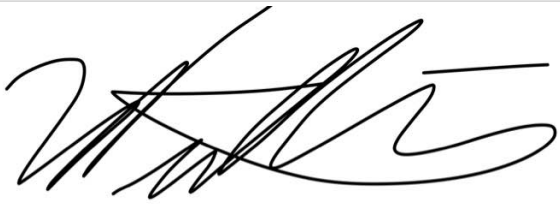

Client - LMCO - Great Neck - SWAP (beta)

General

Site Emergency Number	911
Project Number Lookup	
Project Number	0888827878
Project	VFD OU1/OU2
Client	Lockheed Martin
Project Manager	Rob McCarthy
Location	OU1 and OU2
Date/Time	04/08/2021
Notice	If any work involves confined spaces, excavations, lock out tag out (LOTO), energized circuits, chemical exposure, or working at unguarded heights >4', contact the Corporate Health and Safety Manager or Senior Safety PM unless an approved HASP is in place.
Work Description	Pull forms/restoration

Activities

Task	Remove forms
Hazards	Physical - Cutting, sawing, shearing, or severing action, Physical - Ergonomics: Excessive force required - striking, pulling, or pushing, Physical - Slip/Trip/Fall - same level
Hazards Other	
Controls	Foot : Safety shoes, Hand : Gloves - Leather, Head/Face : Safety glasses w/ side shields (ANSI Z71), Head/Face : Hard hat
Controls Other	Hi Avis vest

Activities (1)

Task	Backfill
Hazards	Physical - Mobile equipment traffic
Hazards Other	
Controls	
Controls Other	Hi vis vest Eye contact with operator Safe working distance from Bobcat

Activities (2)

Task	Backfill
Hazards	
Hazards Other	COVID
Controls	

Client - LMCO - Great Neck - SWAP (beta)

Controls Other	Social distancing Face mask if working within 6ft

SWAP Leader

SWAP Leader Name	Marshall Gibson
Signature	
Comments	
Send Copy SWAP	Rmccarthy@ensafe.com
Include the email addresses, separated by commas, for people you would like to receive a copy of the JHA after submitting.	

Employees

Acknowledgement	I understand the hazards and will utilize the controls as noted above. To be signed by all EnSafe personnel and subcontractors. Subcontractors must provide their own job hazard analysis tool to validate their tasks and controls. Subcontractors signing this document merely verify that they participated in the EnSafe T3 safety process.
Name	Ken Davies
Company	Envirotrac
Signature	

Employees (1)

Acknowledgement	I understand the hazards and will utilize the controls as noted above. To be signed by all EnSafe personnel and subcontractors. Subcontractors must provide their own job hazard analysis tool to validate their tasks and controls. Subcontractors signing this document merely verify that they participated in the EnSafe T3 safety process.
Name	Steve Smith
Company	Envirotrac

Client - LMCO - Great Neck - SWAP (beta)

Signature	

Client - LMCO - Great Neck - SWAP (beta)

General

Site Emergency Number	911
Project Number Lookup	
Project Number	0888827878-11b
Project	LM Greatneck VFD OU2
Client	Lockheed Martin
Project Manager	Rob McCarthy
Location	Lake Success, NY
Date/Time	04/09/2021
Notice	If any work involves confined spaces, excavations, lock out tag out (LOTO), energized circuits, chemical exposure, or working at unguarded heights >4', contact the Corporate Health and Safety Manager or Senior Safety PM unless an approved HASP is in place.
Work Description	OU2 wire run research.

Activities

Task	Electrical work
Hazards	
Hazards Other	Potential live circuits.
Controls	
Controls Other	Lock out, tag out.

SWAP Leader

SWAP Leader Name	Nick McCarthy
Signature	
Comments	
Send Copy SWAP	Rmccarthy@ensafe.com
Include the email addresses, separated by commas, for people you would like to receive a copy of the JHA after submitting.	

Employees

Client - LMCO - Great Neck - SWAP (beta)

Acknowledgement	I understand the hazards and will utilize the controls as noted above. To be signed by all EnSafe personnel and subcontractors. Subcontractors must provide their own job hazard analysis tool to validate their tasks and controls. Subcontractors signing this document merely verify that they participated in the EnSafe T3 safety process.
Name	Gabe Costa
Company	Hinck
Signature	

Client - LMCO - Great Neck - SWAP (beta)

General

Site Emergency Number	911
Project Number Lookup	
Project Number	0888827878-11a/b
Project	LM Greatneck VFD OU1 and OU2
Client	Lockheed Martin
Project Manager	Rob McCarthy
Location	Lake Success, NY
Date/Time	04/12/2021
Notice	If any work involves confined spaces, excavations, lock out tag out (LOTO), energized circuits, chemical exposure, or working at unguarded heights >4', contact the Corporate Health and Safety Manager or Senior Safety PM unless an approved HASP is in place.
Work Description	Bulb install/ vault cleaning. Material organization and PVC install at RW-100.

Activities

Task	Confined space work.
Hazards	
Hazards Other	Potential hazardous atmosphere. Tools falling into vault. Entering and exiting vault.
Controls	
Controls Other	Gas monitoring throughout work day. Use caution when entering the vault. Lower tools into vault when necessary.

SWAP Leader

SWAP Leader Name	Nicholas McCarthy
Signature	
Comments	
Send Copy SWAP	Rmccarthy@gmail.com
Include the email addresses, separated by commas, for people you would like to receive a copy of the JHA after submitting.	

Employees

Client - LMCO - Great Neck - SWAP (beta)

Acknowledgement	I understand the hazards and will utilize the controls as noted above. To be signed by all EnSafe personnel and subcontractors. Subcontractors must provide their own job hazard analysis tool to validate their tasks and controls. Subcontractors signing this document merely verify that they participated in the EnSafe T3 safety process.
Name	Gabe Costa
Company	Hinck
Signature	

Employees (1)

Acknowledgement	I understand the hazards and will utilize the controls as noted above. To be signed by all EnSafe personnel and subcontractors. Subcontractors must provide their own job hazard analysis tool to validate their tasks and controls. Subcontractors signing this document merely verify that they participated in the EnSafe T3 safety process.
Name	Bob Herrmann
Company	Hinck
Signature	

Client - LMCO - Great Neck - SWAP (beta)

General

Site Emergency Number	911
Project Number Lookup	
Project Number	0888827878-11b
Project	LM Greatneck VFD OU2
Client	Lockheed Martin
Project Manager	Rob McCarthy
Location	Lake Success, NY
Date/Time	04/13/2021
Notice	If any work involves confined spaces, excavations, lock out tag out (LOTO), energized circuits, chemical exposure, or working at unguarded heights >4', contact the Corporate Health and Safety Manager or Senior Safety PM unless an approved HASP is in place.
Work Description	PVC installation. Delivery of harmonic filter. Delivery of sub station.

Activities

Task	Electrical work
Hazards	
Hazards Other	Potential live circuits.
Controls	
Controls Other	Lock out, tag out.

Activities (1)

Task	Confined space work.
Hazards	
Hazards Other	Potential hazardous atmosphere. Entering and exiting vault. Tools falling into vault.
Controls	
Controls Other	Gas monitoring throughout work day. Use caution while using ladder to vault. Lower tools into vault when necessary.

Activities (2)

Task	COVID
Hazards	
Hazards Other	Biological.
Controls	
Controls Other	Masks and social distancing.

SWAP Leader

Client - LMCO - Great Neck - SWAP (beta)

SWAP Leader Name	Nick McCarthy
Signature	
Comments	
Send Copy SWAP	Rmccarthy@ensafe.com
Include the email addresses, separated by commas, for people you would like to receive a copy of the JHA after submitting.	

Employees

Acknowledgement	I understand the hazards and will utilize the controls as noted above. To be signed by all EnSafe personnel and subcontractors. Subcontractors must provide their own job hazard analysis tool to validate their tasks and controls. Subcontractors signing this document merely verify that they participated in the EnSafe T3 safety process.
Name	Gabe Costa
Company	Hinck
Signature	

Employees (1)

Acknowledgement	I understand the hazards and will utilize the controls as noted above. To be signed by all EnSafe personnel and subcontractors. Subcontractors must provide their own job hazard analysis tool to validate their tasks and controls. Subcontractors signing this document merely verify that they participated in the EnSafe T3 safety process.
Name	Bob Herrmann
Company	Hinck
Signature	

Client - LMCO - Great Neck - SWAP (beta)

General

Site Emergency Number	911
Project Number Lookup	
Project Number	0888827878-11b
Project	LM Greatneck VFD OU2
Client	Lockheed Martin
Project Manager	Rob McCarthy
Location	Lake Success, NY
Date/Time	04/14/2021
Notice	If any work involves confined spaces, excavations, lock out tag out (LOTO), energized circuits, chemical exposure, or working at unguarded heights >4', contact the Corporate Health and Safety Manager or Senior Safety PM unless an approved HASP is in place.
Work Description	RW-100 conduit installation. Eagle dropped off the remaining pieces of the VFD.

Activities

Task	Confined space work.
Hazards	
Hazards Other	Potential hazardous atmosphere. Tools falling into vault. Entering and exiting vault.
Controls	
Controls Other	Gas monitoring throughout work day. Lower tools into vault when necessary. Use caution when using vaults ladder.

Activities (1)

Task	Electrical work.
Hazards	
Hazards Other	Potential live circuits.
Controls	
Controls Other	Lock out, tag out.

Activities (2)

Task	COVID
Hazards	
Hazards Other	Biological.
Controls	
Controls Other	Masks and social distancing.

SWAP Leader

Client - LMCO - Great Neck - SWAP (beta)

SWAP Leader Name	Nicholas McCarthy
Signature	
Comments	
Send Copy SWAP	Rmccarthy@ensafe.com
Include the email addresses, separated by commas, for people you would like to receive a copy of the JHA after submitting.	

Employees

Acknowledgement	I understand the hazards and will utilize the controls as noted above. To be signed by all EnSafe personnel and subcontractors. Subcontractors must provide their own job hazard analysis tool to validate their tasks and controls. Subcontractors signing this document merely verify that they participated in the EnSafe T3 safety process.
Name	Bob Herrmann
Company	Hinck
Signature	

Employees (1)

Acknowledgement	I understand the hazards and will utilize the controls as noted above. To be signed by all EnSafe personnel and subcontractors. Subcontractors must provide their own job hazard analysis tool to validate their tasks and controls. Subcontractors signing this document merely verify that they participated in the EnSafe T3 safety process.
Name	Gabe Costa
Company	Hinck
Signature	

Client - LMCO - Great Neck - SWAP (beta)

General

Site Emergency Number	911
Project Number Lookup	
Project Number	0888827878-11b
Project	LM Greatneck VFD OU2
Client	Lockheed Martin
Project Manager	Rob McCarthy
Location	Lake Success, NY
Date/Time	04/15/2021
Notice	If any work involves confined spaces, excavations, lock out tag out (LOTO), energized circuits, chemical exposure, or working at unguarded heights >4', contact the Corporate Health and Safety Manager or Senior Safety PM unless an approved HASP is in place.
Work Description	Mounting of substation at RW-100. Mounting of harmonic filter at OU2.

Activities

Task	Mounting unistrut.
Hazards	
Hazards Other	Drilling, cutting and sawing.
Controls	
Controls Other	Safety glasses, gloves and boots.

SWAP Leader

SWAP Leader Name	Nicholas McCarthy
Signature	
Comments	
Send Copy SWAP	Rmccarthy@ensafe.com
Include the email addresses, separated by commas, for people you would like to receive a copy of the JHA after submitting.	

Employees

Client - LMCO - Great Neck - SWAP (beta)

Acknowledgement	I understand the hazards and will utilize the controls as noted above. To be signed by all EnSafe personnel and subcontractors. Subcontractors must provide their own job hazard analysis tool to validate their tasks and controls. Subcontractors signing this document merely verify that they participated in the EnSafe T3 safety process.
Name	Gabe Costa
Company	Hinck
Signature	

Employees (1)

Acknowledgement	I understand the hazards and will utilize the controls as noted above. To be signed by all EnSafe personnel and subcontractors. Subcontractors must provide their own job hazard analysis tool to validate their tasks and controls. Subcontractors signing this document merely verify that they participated in the EnSafe T3 safety process.
Name	Bob Herrmann
Company	Hinck
Signature	

Client - LMCO - Great Neck - SWAP (beta)

General

Site Emergency Number	911
Project Number Lookup	
Project Number	0888827878-11a
Project	LM Greatneck VFD
Client	Lockheed Martin
Project Manager	Rob McCarthy
Location	Lake Success, NY
Date/Time	04/28/2021
Notice	If any work involves confined spaces, excavations, lock out tag out (LOTO), energized circuits, chemical exposure, or working at unguarded heights >4', contact the Corporate Health and Safety Manager or Senior Safety PM unless an approved HASP is in place.
Work Description	Harmonic filter installed at OU1.

Activities

Task	Confined space work
Hazards	
Hazards Other	Potential hazardous atmosphere. Tools falling into vault. Entering and exiting vault.
Controls	
Controls Other	4 gas monitoring throughout work day. Lowering tools into vault when necessary. Use caution when using vaults ladder.

Activities (1)

Task	Electrical work
Hazards	
Hazards Other	Potential live circuits.
Controls	
Controls Other	Lock out tag out.

Activities (2)

Task	Labor
Hazards	
Hazards Other	Heat- 80 and sunny today.
Controls	
Controls Other	Drinking water and taking breaks if necessary.

Activities (3)

Client - LMCO - Great Neck - SWAP (beta)

Task	COVID
Hazards	
Hazards Other	Biological
Controls	
Controls Other	Social distancing and masks.

SWAP Leader

SWAP Leader Name	Nicholas McCarthy
Signature	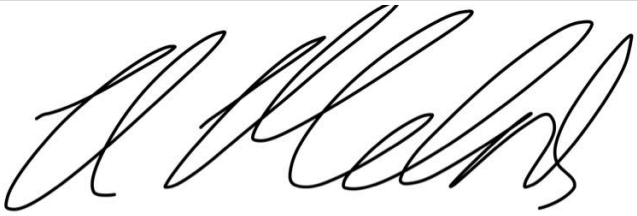
Comments	
Send Copy SWAP	Rmccarthy@ensafe.com
Include the email addresses, separated by commas, for people you would like to receive a copy of the JHA after submitting.	

Employees

Acknowledgement	I understand the hazards and will utilize the controls as noted above. To be signed by all EnSafe personnel and subcontractors. Subcontractors must provide their own job hazard analysis tool to validate their tasks and controls. Subcontractors signing this document merely verify that they participated in the EnSafe T3 safety process.
Name	Gabe Costa
Company	Hinck
Signature	

Employees (1)

Acknowledgement	I understand the hazards and will utilize the controls as noted above. To be signed by all EnSafe personnel and subcontractors. Subcontractors must provide their own job hazard analysis tool to validate their tasks and controls. Subcontractors signing this document merely verify that they participated in the EnSafe T3 safety process.
Name	Paul Lanzilotta
Company	EAgle

Client - LMCO - Great Neck - SWAP (beta)

Signature	

Employees (2)

Acknowledgement	I understand the hazards and will utilize the controls as noted above. To be signed by all EnSafe personnel and subcontractors. Subcontractors must provide their own job hazard analysis tool to validate their tasks and controls. Subcontractors signing this document merely verify that they participated in the EnSafe T3 safety process.
Name	Mike Hagan
Company	Eagle
Signature	

Employees (3)

Acknowledgement	I understand the hazards and will utilize the controls as noted above. To be signed by all EnSafe personnel and subcontractors. Subcontractors must provide their own job hazard analysis tool to validate their tasks and controls. Subcontractors signing this document merely verify that they participated in the EnSafe T3 safety process.
Name	Bob Herrmann
Company	Hinck
Signature	

Client - LMCO - Great Neck - SWAP (beta)

General

Site Emergency Number	911
Project Number Lookup	
Project Number	0888827878-11a
Project	LM GREATNECK VFD
Client	LOCKHEED MARTIN
Project Manager	ROB MCCARTHY
Location	Lake Success, NY
Date/Time	04/29/2021
Notice	If any work involves confined spaces, excavations, lock out tag out (LOTO), energized circuits, chemical exposure, or working at unguarded heights >4', contact the Corporate Health and Safety Manager or Senior Safety PM unless an approved HASP is in place.
Work Description	Transducers complete at RW-1RD, RW-1RS, and EW-1. Fittings fixed at RW-100.

Activities

Task	Electrical Work
Hazards	
Hazards Other	Potential live circuits.
Controls	
Controls Other	Lock out tag out.

Activities (1)

Task	Confined space work
Hazards	
Hazards Other	Potential hazardous atmosphere. Tools falling into vault. Entering and exiting vault.
Controls	
Controls Other	4 gas meter monitoring throughout work day. Lower tools into vault when necessary. Use caution when using vaults ladder.

Activities (2)

Task	COVID-19
Hazards	
Hazards Other	Biological
Controls	
Controls Other	Social distancing and masks.

SWAP Leader

Client - LMCO - Great Neck - SWAP (beta)

SWAP Leader Name	Nick McCarthy
Signature	
Comments	
Send Copy SWAP	Rmccarthy@ensafe.com
Include the email addresses, separated by commas, for people you would like to receive a copy of the JHA after submitting.	

Employees

Acknowledgement	I understand the hazards and will utilize the controls as noted above. To be signed by all EnSafe personnel and subcontractors. Subcontractors must provide their own job hazard analysis tool to validate their tasks and controls. Subcontractors signing this document merely verify that they participated in the EnSafe T3 safety process.
Name	Bob Herrmann
Company	Hinck
Signature	

Employees (1)

Acknowledgement	I understand the hazards and will utilize the controls as noted above. To be signed by all EnSafe personnel and subcontractors. Subcontractors must provide their own job hazard analysis tool to validate their tasks and controls. Subcontractors signing this document merely verify that they participated in the EnSafe T3 safety process.
Name	Gabe Costa
Company	Hinck
Signature	

Employees (2)

Client - LMCO - Great Neck - SWAP (beta)

Acknowledgement	I understand the hazards and will utilize the controls as noted above. To be signed by all EnSafe personnel and subcontractors. Subcontractors must provide their own job hazard analysis tool to validate their tasks and controls. Subcontractors signing this document merely verify that they participated in the EnSafe T3 safety process.
Name	TOM WHITAKER
Company	WOOD
Signature	

Client - LMCO - Great Neck - SWAP (beta)

General

Site Emergency Number	911
Project Number Lookup	
Project Number	088882787-11b
Project	Lm Greatneck VFD
Client	Lockheed Martin
Project Manager	Rob McCarthy
Location	Lake Success, NY
Date/Time	04/30/2021
Notice	If any work involves confined spaces, excavations, lock out tag out (LOTO), energized circuits, chemical exposure, or working at unguarded heights >4', contact the Corporate Health and Safety Manager or Senior Safety PM unless an approved HASP is in place.
Work Description	Support brackets mounted to back of VFD panel at RW-100. Pipe work started on Harmonic filter at OU2.

Activities

Task	Electrical work
Hazards	
Hazards Other	Potential live circuits.
Controls	
Controls Other	Lock out tag out.

Activities (1)

Task	COVID-19
Hazards	
Hazards Other	Biological
Controls	
Controls Other	Social distancing and masks.

Activities (2)

Task	Cutting Conduit.
Hazards	
Hazards Other	Cutting, sawing, grinding.
Controls	
Controls Other	Safety glasses, gloves and safety boots.

SWAP Leader

SWAP Leader Name	Nick McCarthy

Client - LMCO - Great Neck - SWAP (beta)

Signature	
Comments	
Send Copy SWAP	Rmccarthy@ensafe.com
Include the email addresses, separated by commas, for people you would like to receive a copy of the JHA after submitting.	

Employees

Acknowledgement	I understand the hazards and will utilize the controls as noted above. To be signed by all EnSafe personnel and subcontractors. Subcontractors must provide their own job hazard analysis tool to validate their tasks and controls. Subcontractors signing this document merely verify that they participated in the EnSafe T3 safety process.
Name	Gabe Costa
Company	Hinck
Signature	

Employees (1)

Acknowledgement	I understand the hazards and will utilize the controls as noted above. To be signed by all EnSafe personnel and subcontractors. Subcontractors must provide their own job hazard analysis tool to validate their tasks and controls. Subcontractors signing this document merely verify that they participated in the EnSafe T3 safety process.
Name	Bob Herrmann
Company	Hinck
Signature	

Employees (2)

Client - LMCO - Great Neck - SWAP (beta)

Acknowledgement	I understand the hazards and will utilize the controls as noted above. To be signed by all EnSafe personnel and subcontractors. Subcontractors must provide their own job hazard analysis tool to validate their tasks and controls. Subcontractors signing this document merely verify that they participated in the EnSafe T3 safety process.
Name	Mike Hagan
Company	Eagle
Signature	

Client - LMCO - Great Neck - SWAP (beta)

General

Site Emergency Number	911
Project Number Lookup	
Project Number	0888827878-11b
Project	LM Greatneck VFD OU2
Client	Lockheed Martin
Project Manager	Rob McCarthy
Location	Lake Success, NY
Date/Time	05/03/2021
Notice	If any work involves confined spaces, excavations, lock out tag out (LOTO), energized circuits, chemical exposure, or working at unguarded heights >4', contact the Corporate Health and Safety Manager or Senior Safety PM unless an approved HASP is in place.
Work Description	Continued pipe work on harmonic filter. RW-100 testing.

Activities

Task	Electrical work
Hazards	
Hazards Other	Potential live circuits.
Controls	
Controls Other	Lock out, tag out.

Activities (1)

Task	Drilling through wall for harmonic filter at OU2.
Hazards	
Hazards Other	Cutting, sawing and grinding.
Controls	
Controls Other	Safety glasses, gloves, and work boots.

SWAP Leader

SWAP Leader Name	Nick McCarthy
Signature	
Comments	
Send Copy SWAP	Rmccarthy@ensafe.com

Client - LMCO - Great Neck - SWAP (beta)

Include the email addresses, separated by commas, for people you would like to receive a copy of the JHA after submitting.	

Employees

Acknowledgement	I understand the hazards and will utilize the controls as noted above. To be signed by all EnSafe personnel and subcontractors. Subcontractors must provide their own job hazard analysis tool to validate their tasks and controls. Subcontractors signing this document merely verify that they participated in the EnSafe T3 safety process.
Name	Bob Herrmann
Company	Hinck
Signature	

Employees (1)

Acknowledgement	I understand the hazards and will utilize the controls as noted above. To be signed by all EnSafe personnel and subcontractors. Subcontractors must provide their own job hazard analysis tool to validate their tasks and controls. Subcontractors signing this document merely verify that they participated in the EnSafe T3 safety process.
Name	Gabe Costa
Company	Hinck
Signature	

Client - LMCO - Great Neck - SWAP (beta)

General

Site Emergency Number	911
Project Number Lookup	
Project Number	0888827878-11@
Project	LM Greatneck VFD OU1
Client	Lockheed Martin
Project Manager	Rob McCarthy
Location	Lake Success, NY
Date/Time	05/04/2021
Notice	If any work involves confined spaces, excavations, lock out tag out (LOTO), energized circuits, chemical exposure, or working at unguarded heights >4', contact the Corporate Health and Safety Manager or Senior Safety PM unless an approved HASP is in place.
Work Description	Piping for harmonic filter at OU2 finished. Piping for harmonic filter at OU1 started.

Activities

Task	Electrical Work
Hazards	
Hazards Other	Potential live circuits.
Controls	
Controls Other	Lock out, tag out.

Activities (1)

Task	Cutting piping for harmonic filter.
Hazards	
Hazards Other	Cutting the piping with a portaband.
Controls	
Controls Other	Safety glasses, gloves and boots.

Activities (2)

Task	COVID
Hazards	
Hazards Other	Biological
Controls	
Controls Other	Masks and social distancing.

SWAP Leader

SWAP Leader Name	Nick McCarthy

Client - LMCO - Great Neck - SWAP (beta)

Signature	
Comments	
Send Copy SWAP	Rmccarthy@gmail.com
Include the email addresses, separated by commas, for people you would like to receive a copy of the JHA after submitting.	

Employees

Acknowledgement	I understand the hazards and will utilize the controls as noted above. To be signed by all EnSafe personnel and subcontractors. Subcontractors must provide their own job hazard analysis tool to validate their tasks and controls. Subcontractors signing this document merely verify that they participated in the EnSafe T3 safety process.
Name	Bob Herrmann
Company	Hinck
Signature	

Employees (1)

Acknowledgement	I understand the hazards and will utilize the controls as noted above. To be signed by all EnSafe personnel and subcontractors. Subcontractors must provide their own job hazard analysis tool to validate their tasks and controls. Subcontractors signing this document merely verify that they participated in the EnSafe T3 safety process.
Name	Gabe Costa
Company	Hinck
Signature	

Client - LMCO - Great Neck - SWAP (beta)

General

Site Emergency Number	911
Project Number Lookup	
Project Number	0888827878-11a
Project	LM Greatneck VFD OU1
Client	Lockheed Martin
Project Manager	Rob McCarthy
Location	Lake Success, NY
Date/Time	05/05/2021
Notice	If any work involves confined spaces, excavations, lock out tag out (LOTO), energized circuits, chemical exposure, or working at unguarded heights >4', contact the Corporate Health and Safety Manager or Senior Safety PM unless an approved HASP is in place.
Work Description	Pipe work at OU1's harmonic filter continued.

Activities

Task	Electrical Work
Hazards	
Hazards Other	Potential live circuits.
Controls	
Controls Other	Lock out, tag out.

Activities (1)

Task	Cutting pipe for the harmonic filter.
Hazards	
Hazards Other	Cutting, sawing, grinding.
Controls	
Controls Other	Safety glasses, boots, and gloves.

Activities (2)

Task	Covid
Hazards	
Hazards Other	Biological.
Controls	
Controls Other	Social distancing and masks.

Activities (3)

Task	Confined space work.

Client - LMCO - Great Neck - SWAP (beta)

Hazards	
Hazards Other	Potential hazardous environment. Tools falling into vault. Entering and exiting vault.
Controls	
Controls Other	4 gas monitoring throughout the confined space work. Lowering tools into vault when necessary. Use caution while entering and exiting the vault.

SWAP Leader

SWAP Leader Name	Nick McCarthy
Signature	
Comments	
Send Copy SWAP	Rmccarthy@gmail.com
Include the email addresses, separated by commas, for people you would like to receive a copy of the JHA after submitting.	

Employees

Acknowledgement	I understand the hazards and will utilize the controls as noted above. To be signed by all EnSafe personnel and subcontractors. Subcontractors must provide their own job hazard analysis tool to validate their tasks and controls. Subcontractors signing this document merely verify that they participated in the EnSafe T3 safety process.
Name	Bob Herrmann
Company	Hinck
Signature	

Employees (1)

Acknowledgement	I understand the hazards and will utilize the controls as noted above. To be signed by all EnSafe personnel and subcontractors. Subcontractors must provide their own job hazard analysis tool to validate their tasks and controls. Subcontractors signing this document merely verify that they participated in the EnSafe T3 safety process.
Name	Gabe Costa

Client - LMCO - Great Neck - SWAP (beta)

Company	Hinck
Signature	

Client - LMCO - Great Neck - SWAP (beta)

General

Site Emergency Number	911
Project Number Lookup	
Project Number	0888827878-11a
Project	LM Greatneck VFD
Client	Lockheed Martin
Project Manager	Rob McCarthy
Location	Lake Success, NY
Date/Time	05/06/2021
Notice	If any work involves confined spaces, excavations, lock out tag out (LOTO), energized circuits, chemical exposure, or working at unguarded heights >4', contact the Corporate Health and Safety Manager or Senior Safety PM unless an approved HASP is in place.
Work Description	Piping from Harmonic filter into OU1 completed. Power feeds pulled in both OU1 and OU2. Wires terminated on both ends at OU1 and OU2. Filter at OU2 ready for representative. Work continued on OU1 tomorrow.

Activities

Task	Electrical Work
Hazards	
Hazards Other	Potential live circuits.
Controls	
Controls Other	Lock out, tag out.

Activities (1)

Task	Pipe cutting for OU1 harmonic filter .
Hazards	
Hazards Other	Cutting, sawing and grinding.
Controls	
Controls Other	Safety boots, gloves, and eye protection.

Activities (2)

Task	COVID
Hazards	
Hazards Other	Biological
Controls	
Controls Other	Social distancing and masks.

SWAP Leader

SWAP Leader Name	Nick McCarthy

Client - LMCO - Great Neck - SWAP (beta)

Signature	
Comments	
Send Copy SWAP	Rmccarthy@gmail.com
Include the email addresses, separated by commas, for people you would like to receive a copy of the JHA after submitting.	

Employees

Acknowledgement	I understand the hazards and will utilize the controls as noted above. To be signed by all EnSafe personnel and subcontractors. Subcontractors must provide their own job hazard analysis tool to validate their tasks and controls. Subcontractors signing this document merely verify that they participated in the EnSafe T3 safety process.
Name	Bob Herrmann
Company	Hinck
Signature	

Employees (1)

Acknowledgement	I understand the hazards and will utilize the controls as noted above. To be signed by all EnSafe personnel and subcontractors. Subcontractors must provide their own job hazard analysis tool to validate their tasks and controls. Subcontractors signing this document merely verify that they participated in the EnSafe T3 safety process.
Name	Gabe Costa
Company	Hinck
Signature	

Employees (2)

Client - LMCO - Great Neck - SWAP (beta)

Acknowledgement	I understand the hazards and will utilize the controls as noted above. To be signed by all EnSafe personnel and subcontractors. Subcontractors must provide their own job hazard analysis tool to validate their tasks and controls. Subcontractors signing this document merely verify that they participated in the EnSafe T3 safety process.
Name	Tom Whitaker
Company	WOOD
Signature	

Client - LMCO - Great Neck - SWAP (beta)

General

Site Emergency Number	911
Project Number Lookup	
Project Number	0888827878-11b
Project	LM Greatneck VFD OU2
Client	Lockheed Martin
Project Manager	Rob McCarthy
Location	Lake Success, NY
Date/Time	05/07/2021
Notice	If any work involves confined spaces, excavations, lock out tag out (LOTO), energized circuits, chemical exposure, or working at unguarded heights >4', contact the Corporate Health and Safety Manager or Senior Safety PM unless an approved HASP is in place.
Work Description	Hinck worked on cement patching in RW-100 and OU2. Eagle continued to trouble shooting. OU2 gets restarted.

Activities

Task	Electrical work
Hazards	
Hazards Other	Potential live circuits.
Controls	
Controls Other	Lockout, tag out.

Activities (1)

Task	COVID
Hazards	
Hazards Other	Biological.
Controls	
Controls Other	Social distancing and masks.

Activities (2)

Task	Confined space work at RW-100
Hazards	
Hazards Other	Potential hazardous atmosphere.
Controls	
Controls Other	4 gas monitoring throughout work day.

SWAP Leader

SWAP Leader Name	In the

Client - LMCO - Great Neck - SWAP (beta)

Signature	
Comments	
Send Copy SWAP	Rmccarthy@ensafe.com
Include the email addresses, separated by commas, for people you would like to receive a copy of the JHA after submitting.	

Employees

Acknowledgement	I understand the hazards and will utilize the controls as noted above. To be signed by all EnSafe personnel and subcontractors. Subcontractors must provide their own job hazard analysis tool to validate their tasks and controls. Subcontractors signing this document merely verify that they participated in the EnSafe T3 safety process.
Name	Bob Herrmann
Company	Hinck
Signature	

Employees (1)

Acknowledgement	I understand the hazards and will utilize the controls as noted above. To be signed by all EnSafe personnel and subcontractors. Subcontractors must provide their own job hazard analysis tool to validate their tasks and controls. Subcontractors signing this document merely verify that they participated in the EnSafe T3 safety process.
Name	Gabe Costa
Company	Hinck
Signature	

Client - LMCO - Great Neck - SWAP (beta)

General

Site Emergency Number	911
Project Number Lookup	
Project Number	0888827878
Project	LM Greatneck VFD OU1 and OU2
Client	Lockheed Martin
Project Manager	Rob McCarthy
Location	Lake Success, NY
Date/Time	05/10/2021
Notice	If any work involves confined spaces, excavations, lock out tag out (LOTO), energized circuits, chemical exposure, or working at unguarded heights >4', contact the Corporate Health and Safety Manager or Senior Safety PM unless an approved HASP is in place.
Work Description	Hydraulic cement work in and vaults plus OU1.

Activities

Task	Electrical Work
Hazards	
Hazards Other	Potential live circuits.
Controls	
Controls Other	Lockout,tag out.

Activities (1)

Task	Confined space work.
Hazards	
Hazards Other	Potential hazardous atmosphere. Tools falling into vault. Entering and exiting vault.
Controls	
Controls Other	Gas monitoring throughout work day. Lower tools into vault when necessary. Use caution while using ladder to vault.

Activities (2)

Task	COVID
Hazards	
Hazards Other	Biological.
Controls	
Controls Other	Social distancing and masks.

SWAP Leader

Client - LMCO - Great Neck - SWAP (beta)

SWAP Leader Name	Nick McCarthy
Signature	
Comments	
Send Copy SWAP	Rmccarthy@ensafe.com
Include the email addresses, separated by commas, for people you would like to receive a copy of the JHA after submitting.	

Employees

Acknowledgement	I understand the hazards and will utilize the controls as noted above. To be signed by all EnSafe personnel and subcontractors. Subcontractors must provide their own job hazard analysis tool to validate their tasks and controls. Subcontractors signing this document merely verify that they participated in the EnSafe T3 safety process.
Name	Bob Herrmann
Company	Hinck
Signature	

Employees (1)

Acknowledgement	I understand the hazards and will utilize the controls as noted above. To be signed by all EnSafe personnel and subcontractors. Subcontractors must provide their own job hazard analysis tool to validate their tasks and controls. Subcontractors signing this document merely verify that they participated in the EnSafe T3 safety process.
Name	Gabe Costa
Company	Hinck
Signature	

Employees (2)

Client - LMCO - Great Neck - SWAP (beta)

Acknowledgement	I understand the hazards and will utilize the controls as noted above. To be signed by all EnSafe personnel and subcontractors. Subcontractors must provide their own job hazard analysis tool to validate their tasks and controls. Subcontractors signing this document merely verify that they participated in the EnSafe T3 safety process.
Name	Tom Whitaker
Company	WOOD
Signature	

Client - LMCO - Great Neck - SWAP (beta)

General

Site Emergency Number	911
Project Number Lookup	
Project Number	0888827878-11a
Project	LM Greatneck VFD OU1
Client	Lockheed Martin
Project Manager	Rob McCarthy
Location	Lake Success, NY
Date/Time	05/17/2021
Notice	If any work involves confined spaces, excavations, lock out tag out (LOTO), energized circuits, chemical exposure, or working at unguarded heights >4', contact the Corporate Health and Safety Manager or Senior Safety PM unless an approved HASP is in place.
Work Description	OU1 shutdown. CTE installed. OU1 restarted.

Activities

Task	Electrical Work
Hazards	
Hazards Other	Potential live circuits.
Controls	
Controls Other	Lock out, tag out. High voltage suit. Safety glasses, gloves, boots.

Activities (1)

Task	COVID
Hazards	
Hazards Other	Biological.
Controls	
Controls Other	Masks and social distancing.

SWAP Leader

SWAP Leader Name	Nicholas McCarthy
Signature	

Client - LMCO - Great Neck - SWAP (beta)

Comments	
Send Copy SWAP	Rmccarthy@ensafe.com
Include the email addresses, separated by commas, for people you would like to receive a copy of the JHA after submitting.	

Employees

Acknowledgement	I understand the hazards and will utilize the controls as noted above. To be signed by all EnSafe personnel and subcontractors. Subcontractors must provide their own job hazard analysis tool to validate their tasks and controls. Subcontractors signing this document merely verify that they participated in the EnSafe T3 safety process.
Name	Gabe Costa
Company	Hinck
Signature	

Employees (1)

Acknowledgement	I understand the hazards and will utilize the controls as noted above. To be signed by all EnSafe personnel and subcontractors. Subcontractors must provide their own job hazard analysis tool to validate their tasks and controls. Subcontractors signing this document merely verify that they participated in the EnSafe T3 safety process.
Name	Bob Herrmann
Company	Hinck
Signature	

Client - LMCO - Great Neck - SWAP (beta)

General

Site Emergency Number	911
Project Number Lookup	
Project Number	0888827878
Project	LM Greatneck VFD OU1
Client	Lockheed Martin
Project Manager	Rob McCarthy
Location	Lake Success, NY
Date/Time	05/19/2021
Notice	If any work involves confined spaces, excavations, lock out tag out (LOTO), energized circuits, chemical exposure, or working at unguarded heights >4', contact the Corporate Health and Safety Manager or Senior Safety PM unless an approved HASP is in place.
Work Description	Harmonic filter at OU1 commissioned and brought into service.

Activities

Task	Electrical Work
Hazards	
Hazards Other	Potential live circuits.
Controls	
Controls Other	Lock out, tag out.

Activities (1)

Task	COVID
Hazards	
Hazards Other	Biological
Controls	
Controls Other	Social distancing and masks.

SWAP Leader

SWAP Leader Name	Nick McCarthy
Signature	
Comments	
Send Copy SWAP	Rmccarthy@ensafe.com

Client - LMCO - Great Neck - SWAP (beta)

Include the email addresses, separated by commas, for people you would like to receive a copy of the JHA after submitting.	

Employees

Acknowledgement	I understand the hazards and will utilize the controls as noted above. To be signed by all EnSafe personnel and subcontractors. Subcontractors must provide their own job hazard analysis tool to validate their tasks and controls. Subcontractors signing this document merely verify that they participated in the EnSafe T3 safety process.
Name	Bob Herrmann
Company	Hinck
Signature	

Employees (1)

Acknowledgement	I understand the hazards and will utilize the controls as noted above. To be signed by all EnSafe personnel and subcontractors. Subcontractors must provide their own job hazard analysis tool to validate their tasks and controls. Subcontractors signing this document merely verify that they participated in the EnSafe T3 safety process.
Name	Dario morales
Company	Great Rock Automation
Signature	

Employees (2)

Acknowledgement	I understand the hazards and will utilize the controls as noted above. To be signed by all EnSafe personnel and subcontractors. Subcontractors must provide their own job hazard analysis tool to validate their tasks and controls. Subcontractors signing this document merely verify that they participated in the EnSafe T3 safety process.
Name	Tom Whitaker
Company	Wood

Client - LMCO - Great Neck - SWAP (beta)

Signature	

Client - LMCO - Great Neck - SWAP (beta)

General

Site Emergency Number	911
Project Number Lookup	
Project Number	0888827878
Project	VFD
Client	Lockheed Martin
Project Manager	Rob McCarthy
Location	OU1 and OU2
Date/Time	06/14/2021
Notice	If any work involves confined spaces, excavations, lock out tag out (LOTO), energized circuits, chemical exposure, or working at unguarded heights >4', contact the Corporate Health and Safety Manager or Senior Safety PM unless an approved HASP is in place.
Work Description	Excavation for new stairs/prep for concrete
HIDDEN FIELD (INTERNAL USE - DON'T DELETE)	SWAP

Activities

Task	Cutting asphalt
Hazards	Physical - Cutting, sawing, shearing, or severing action, Physical - High noise levels
Hazards Other	
Controls	Foot : Safety shoes, Hand : Gloves - Leather, Head/Face : Hard hat, Head/Face : Safety glasses w/ side shields (ANSI Z71), Hearing : Ear Plugs
Controls Other	Hi vis vest

Activities (1)

Task	Hand excavation
Hazards	Physical - Ergonomics: Excessive force required - striking, pulling, or pushing, Physical - Slip/Trip/Fall - same level
Hazards Other	
Controls	Hand : Gloves - Leather
Controls Other	Breaks as necessary Don't over-exert

SWAP Leader

SWAP Leader Name	Marshall Gibson

Client - LMCO - Great Neck - SWAP (beta)

Signature	
Comments	
Send Copy SWAP	rmccarthy@ensafe.com
Include the email addresses, separated by commas, for people you would like to receive a copy of the JHA after submitting.	

Employees

Acknowledgement	I understand the hazards and will utilize the controls as noted above. To be signed by all EnSafe personnel and subcontractors. Subcontractors must provide their own job hazard analysis tool to validate their tasks and controls. Subcontractors signing this document merely verify that they participated in the EnSafe T3 safety process.
Name	Mike Alliegro
Company	Envirotrac
Signature	

Employees (1)

Acknowledgement	I understand the hazards and will utilize the controls as noted above. To be signed by all EnSafe personnel and subcontractors. Subcontractors must provide their own job hazard analysis tool to validate their tasks and controls. Subcontractors signing this document merely verify that they participated in the EnSafe T3 safety process.
Name	Steve Smith
Company	Envirotrac
Signature	

Employees (2)

Client - LMCO - Great Neck - SWAP (beta)

Acknowledgement	I understand the hazards and will utilize the controls as noted above. To be signed by all EnSafe personnel and subcontractors. Subcontractors must provide their own job hazard analysis tool to validate their tasks and controls. Subcontractors signing this document merely verify that they participated in the EnSafe T3 safety process.
Name	Ken Davies
Company	Envirotrac
Signature	

Employees (3)

Acknowledgement	I understand the hazards and will utilize the controls as noted above. To be signed by all EnSafe personnel and subcontractors. Subcontractors must provide their own job hazard analysis tool to validate their tasks and controls. Subcontractors signing this document merely verify that they participated in the EnSafe T3 safety process.
Name	Jim Wilkinson
Company	Envirotrac
Signature	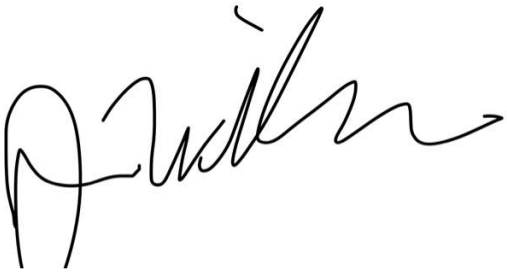

Client - LMCO - Great Neck - SWAP (beta)

General

Site Emergency Number	911
Project Number Lookup	
Project Number	0888827878
Project	VFD
Client	Lockheed Martin
Project Manager	Rob McCarthy
Location	OU1 and OU2
Date/Time	06/15/2021
Notice	If any work involves confined spaces, excavations, lock out tag out (LOTO), energized circuits, chemical exposure, or working at unguarded heights >4', contact the Corporate Health and Safety Manager or Senior Safety PM unless an approved HASP is in place.
Work Description	Pour concrete / saw cut for bollards
HIDDEN FIELD (INTERNAL USE - DON'T DELETE)	SWAP

Activities

Task	Pour concrete
Hazards	Physical - Manual movement of heavy items (>40 lbs.), Physical - Mobile equipment traffic, Physical - Slip/Trip/Fall - same level
Hazards Other	
Controls	Foot : Safety shoes, Hand : Gloves - Chemical resistant, Head/Face : Hard hat, Head/Face : Safety glasses w/ side shields (ANSI Z71)
Controls Other	Caution when walking

Activities (1)

Task	Saw cut for bollards
Hazards	Physical - Cutting, sawing, shearing, or severing action
Hazards Other	
Controls	Foot : Safety shoes, Hand : Gloves - Leather, Head/Face : Hard hat, Head/Face : Safety glasses w/ side shields (ANSI Z71), Hearing : Ear Plugs
Controls Other	

SWAP Leader

SWAP Leader Name	Marshall Gibson

Client - LMCO - Great Neck - SWAP (beta)

Signature	
Comments	
Send Copy SWAP	Rmccarthy@ensafe.com
Include the email addresses, separated by commas, for people you would like to receive a copy of the JHA after submitting.	

Employees

Acknowledgement	I understand the hazards and will utilize the controls as noted above. To be signed by all EnSafe personnel and subcontractors. Subcontractors must provide their own job hazard analysis tool to validate their tasks and controls. Subcontractors signing this document merely verify that they participated in the EnSafe T3 safety process.
Name	Ken Davies
Company	Envirotrac
Signature	

Employees (1)

Acknowledgement	I understand the hazards and will utilize the controls as noted above. To be signed by all EnSafe personnel and subcontractors. Subcontractors must provide their own job hazard analysis tool to validate their tasks and controls. Subcontractors signing this document merely verify that they participated in the EnSafe T3 safety process.
Name	Steve Smith
Company	Envirotrac
Signature	

Employees (2)

Client - LMCO - Great Neck - SWAP (beta)

Acknowledgement	I understand the hazards and will utilize the controls as noted above. To be signed by all EnSafe personnel and subcontractors. Subcontractors must provide their own job hazard analysis tool to validate their tasks and controls. Subcontractors signing this document merely verify that they participated in the EnSafe T3 safety process.
Name	Casey Byrnes
Company	Envirotrac
Signature	

Client - LMCO - Great Neck - SWAP (beta)

General

Site Emergency Number	
Project Number Lookup	0888827878
Project Number	0888827878
Project	LMC-ElectricalUpgrade--GreatNeck'N
Client	Lockheed Martin Corporation
Project Manager	Robert McCarthy
Location	OU2 treatment building
Date/Time	06/16/2021
Notice	If any work involves confined spaces, excavations, lock out tag out (LOTO), energized circuits, chemical exposure, or working at unguarded heights >4', contact the Corporate Health and Safety Manager or Senior Safety PM unless an approved HASP is in place.
Work Description	Envirotrac on-site to complete stair installation at vault
HIDDEN FIELD (INTERNAL USE - DON'T DELETE)	SWAP

Activities

Task	Remove forms
Hazards	Physical - Manual movement of heavy items (>40 lbs.)
Hazards Other	
Controls	Hand : Gloves - Leather, Foot : Safety shoes
Controls Other	

Activities (1)

Task	Drilling and bolting stairs
Hazards	Physical - Drilling, milling, or boring action
Hazards Other	
Controls	Foot : Safety shoes, Hand : Gloves - Leather, Hearing : Ear Muffs, Hearing : Ear Plugs
Controls Other	

Activities (2)

Task	Working outdoors
Hazards	Other
Hazards Other	Sun, warm weather, slips trips falls
Controls	Other
Controls Other	Sunscreen, hydration, pay attention to surroundings

SWAP Leader

Client - LMCO - Great Neck - SWAP (beta)

SWAP Leader Name	Rob mccarthy
Signature	
Comments	
Send Copy SWAP	
Include the email addresses, separated by commas, for people you would like to receive a copy of the JHA after submitting.	

Employees

Acknowledgement	I understand the hazards and will utilize the controls as noted above. To be signed by all EnSafe personnel and subcontractors. Subcontractors must provide their own job hazard analysis tool to validate their tasks and controls. Subcontractors signing this document merely verify that they participated in the EnSafe T3 safety process.
Name	
Company	ENSAFE
Signature	

Client - LMCO - Great Neck - SWAP

General

Site Emergency Number	911
Project Number Lookup	
Project Number	0888827878
Project	VFD
Client	Lockheed Martin
Project Manager	Rob McCarthy
Location	OU1 and OU2
Date/Time	06/28/2021
Notice	If any work involves confined spaces, excavations, lock out tag out (LOTO), energized circuits, chemical exposure, or working at unguarded heights >4', contact the Corporate Health and Safety Manager or Senior Safety PM unless an approved HASP is in place.
Work Description	Electrical punch list / stray voltage
HIDDEN FIELD (INTERNAL USE - DON'T DELETE)	SWAP

Activities

Task	Enter vault
Hazards	Physical - Falls - from height (> 4 feet)
Hazards Other	
Controls	Foot : Safety shoes, Head/Face : Safety glasses w/ side shields (ANSI Z71), Head/Face : Hard hat
Controls Other	Use hand-rail entering and exiting vault Use team system when bringing heavy equipment in and out of vault Minimize tools/equipment around edges to vault opening

Activities (1)

Task	Vault
Hazards	
Hazards Other	Potentially dangerous atmosphere in vault
Controls	
Controls Other	4-gas meter

Activities (2)

Task	Vault
Hazards	Physical - Extreme hot/cold work environment
Hazards Other	
Controls	

Client - LMCO - Great Neck - SWAP

Controls Other	Drink plenty of

SWAP Leader

SWAP Leader Name	Marshall Gibson
Signature	
Comments	
Send Copy SWAP	Rmccarthy@ensafe.com
Include the email addresses, separated by commas, for people you would like to receive a copy of the JHA after submitting.	

Employees

Acknowledgement	I understand the hazards and will utilize the controls as noted above. To be signed by all EnSafe personnel and subcontractors. Subcontractors must provide their own job hazard analysis tool to validate their tasks and controls. Subcontractors signing this document merely verify that they participated in the EnSafe T3 safety process.
Name	Bob Hermann
Company	Hinck
Signature	

Employees (1)

Acknowledgement	I understand the hazards and will utilize the controls as noted above. To be signed by all EnSafe personnel and subcontractors. Subcontractors must provide their own job hazard analysis tool to validate their tasks and controls. Subcontractors signing this document merely verify that they participated in the EnSafe T3 safety process.
Name	Tom Whitaker
Company	AMEC

Client - LMCO - Great Neck - SWAP

Signature	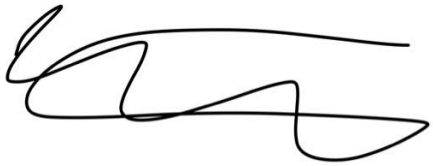

Employees (2)

Acknowledgement	I understand the hazards and will utilize the controls as noted above. To be signed by all EnSafe personnel and subcontractors. Subcontractors must provide their own job hazard analysis tool to validate their tasks and controls. Subcontractors signing this document merely verify that they participated in the EnSafe T3 safety process.
Name	Andrew Ferrizz
Company	Hinck
Signature	

Employees (3)

Acknowledgement	I understand the hazards and will utilize the controls as noted above. To be signed by all EnSafe personnel and subcontractors. Subcontractors must provide their own job hazard analysis tool to validate their tasks and controls. Subcontractors signing this document merely verify that they participated in the EnSafe T3 safety process.
Name	Jim Wilkinson
Company	Envirotrac
Signature	

Date Submitted: 03/31/2021 08:29 AM
Submitted By: nmccarthy@ensafe.com

Client - LMCO -Great Neck- Confined Space Alternate Procedures Permit and Cert

Section 1

ID Number	RW-100
Description	Recovery Well Vault
Facility Address	1111 Marcus Avenue, Lake Success, NY
Emergency Phone #	
Date of Entry	03/31/2021
Duration:	
From	
To	
Purpose of Entry	Electrical Upgrade

Alternate Procedures Conditions

1. Only hazard is actual or potential Hazardous Atmosphere.	Yes
2. Air ventilation (forced) sufficient to maintain space safe for entry.	Yes
3. Monitoring and inspection data developed.	Yes
4. Initial entry for data collection performed using EnSafe Permit-Required Confined Space Program.	Yes
5. Monitoring and inspection data available to employees.	Yes
6. Entry into space to be in accordance with alternate procedures.	Yes

Alternate Procedure Requirements

1. Entrant training complete.	Yes
2. Condition making cover removal unsafe. Condition eliminated.	Yes
3. Opening guarded by:	Other
4. Internal Atmosphere	

Condition: (O2)

Acceptable Entry Conditions Measurement (O2)	19.5 - 23%
Pre-Entry* Test Results Measurement (O2)	20.9
Date & Time (O2)	03/31/2021
Tester (O2)	NPM

Client - LMCO -Great Neck- Confined Space Alternate Procedures Permit and Cert

Test Instruments Type (O2)	Multi Rae
Test Instruments Serial No. (O2)	PGM6208
Calib. Date (O2)	03/30/2021

Condition: (LEL)

Acceptable Entry Conditions Measurement (LEL)	10%
Pre-Entry* Test Results Measurement (LEL)	0%
Date & Time (LEL)	03/31/2021
Tester (LEL)	Npm
Test Instruments Type (LEL)	Multi Rae
Test Instruments Serial No. (LEL)	PGM6208
Calib. Date (LEL)	03/30/2021

Condition: (CO)

Acceptable Entry Conditions Measurement (CO)	50ppm max
Pre-Entry* Test Results Measurement (CO)	0 ppm
Date & Time (CO)	03/31/2021
Tester (CO)	Npm
Test Instruments Type (CO)	Multi Rae
Test Instruments Serial No. (CO)	PGM6208
Calib. Date (CO)	03/30/2021

Condition: (H2S)

Acceptable Entry Conditions Measurement (H2S)	10 ppm
Pre-Entry* Test Results Measurement (H2S)	0ppm
Date & Time (H2S)	03/31/2021
Tester (H2S)	NPM
Test Instruments Type (H2S)	Multi Rae
Test Instruments Serial No. (H2S)	PGM6208
Calib. Date (H2S)	03/30/2021

Condition: (VOC)

Acceptable Entry Conditions Measurement (VOC)	50 ppm

Client - LMCO -Great Neck- Confined Space Alternate Procedures Permit and Cert

Pre-Entry* Test Results Measurement (VOC)	0 ppm
Date & Time (VOC)	03/31/2021
Tester (VOC)	NPM
Test Instruments Type (VOC)	Multi Rae
Test Instruments Serial No. (VOC)	PGM6208
Calib. Date (VOC)	03/30/2021

Client - LMCO -Great Neck- Confined Space Alternate Procedures Permit and Cert

Section 1

ID Number	RW-100
Description	Recovery well vault
Facility Address	1111 Marcus Avenue, Lake Success, NY
Emergency Phone #	
Date of Entry	04/01/2021
Duration:	
From	04/01/2021
To	04/01/2021
Purpose of Entry	Electrical Upgrade

Alternate Procedures Conditions

1. Only hazard is actual or potential Hazardous Atmosphere.	Yes
2. Air ventilation (forced) sufficient to maintain space safe for entry.	Yes
3. Monitoring and inspection data developed.	Yes
4. Initial entry for data collection performed using EnSafe Permit-Required Confined Space Program.	Yes
5. Monitoring and inspection data available to employees.	Yes
6. Entry into space to be in accordance with alternate procedures.	Yes

Alternate Procedure Requirements

1. Entrant training complete.	Yes
2. Condition making cover removal unsafe. Condition eliminated.	Yes
3. Opening guarded by:	Other
4. Internal Atmosphere	

Condition: (O2)

Acceptable Entry Conditions Measurement (O2)	195-23%
Pre-Entry* Test Results Measurement (O2)	20.9
Date & Time (O2)	04/01/2021
Tester (O2)	NPM

Client - LMCO -Great Neck- Confined Space Alternate Procedures Permit and Cert

Test Instruments Type (O2)	MULTI RAE
Test Instruments Serial No. (O2)	PGM6208
Calib. Date (O2)	03/30/2021

Condition: (LEL)

Acceptable Entry Conditions Measurement (LEL)	10%
Pre-Entry* Test Results Measurement (LEL)	0%
Date & Time (LEL)	04/01/2021
Tester (LEL)	NPM
Test Instruments Type (LEL)	MULTI RAE
Test Instruments Serial No. (LEL)	PGM6208
Calib. Date (LEL)	03/30/2021

Condition: (CO)

Acceptable Entry Conditions Measurement (CO)	50 PPM
Pre-Entry* Test Results Measurement (CO)	0ppm
Date & Time (CO)	04/01/2021
Tester (CO)	NPM
Test Instruments Type (CO)	MULTI RAE
Test Instruments Serial No. (CO)	PGM6208
Calib. Date (CO)	03/30/2021

Condition: (H2S)

Acceptable Entry Conditions Measurement (H2S)	10PPM
Pre-Entry* Test Results Measurement (H2S)	0ppm
Date & Time (H2S)	04/01/2021
Tester (H2S)	NPM
Test Instruments Type (H2S)	MULTI RAE
Test Instruments Serial No. (H2S)	PGM6208
Calib. Date (H2S)	03/30/2021

Condition: (VOC)

Acceptable Entry Conditions Measurement (VOC)	50ppm

Client - LMCO -Great Neck- Confined Space Alternate Procedures Permit and Cert

Pre-Entry* Test Results Measurement (VOC)	1
Date & Time (VOC)	04/01/2021
Tester (VOC)	NPM
Test Instruments Type (VOC)	MULTI RAE
Test Instruments Serial No. (VOC)	PGM6208
Calib. Date (VOC)	03/30/2021

Client - LMCO -Great Neck- Confined Space Alternate Procedures Permit and Cert

Section 1

ID Number	EW-1
Description	Well vault
Facility Address	1111 Marcus Avenue, Lake Success, NY
Emergency Phone #	
Date of Entry	04/02/2021
Duration:	
From	04/02/2021
To	04/02/2021
Purpose of Entry	Electrical Upgrade

Alternate Procedures Conditions

1. Only hazard is actual or potential Hazardous Atmosphere.	Yes
2. Air ventilation (forced) sufficient to maintain space safe for entry.	Yes
3. Monitoring and inspection data developed.	Yes
4. Initial entry for data collection performed using EnSafe Permit-Required Confined Space Program.	Yes
5. Monitoring and inspection data available to employees.	Yes
6. Entry into space to be in accordance with alternate procedures.	Yes

Alternate Procedure Requirements

1. Entrant training complete.	Yes
2. Condition making cover removal unsafe. Condition eliminated.	Yes
3. Opening guarded by:	Other
4. Internal Atmosphere	

Condition: (O2)

Acceptable Entry Conditions Measurement (O2)	19.5-23%
Pre-Entry* Test Results Measurement (O2)	20.9
Date & Time (O2)	04/02/2021
Tester (O2)	NPM

Client - LMCO -Great Neck- Confined Space Alternate Procedures Permit and Cert

Test Instruments Type (O2)	MULTI RAE
Test Instruments Serial No. (O2)	PGM6208
Calib. Date (O2)	03/30/2021

Condition: (LEL)

Acceptable Entry Conditions Measurement (LEL)	10%
Pre-Entry* Test Results Measurement (LEL)	0
Date & Time (LEL)	04/02/2021
Tester (LEL)	NPM
Test Instruments Type (LEL)	MULTI RAE
Test Instruments Serial No. (LEL)	PGM6208
Calib. Date (LEL)	03/30/2021

Condition: (CO)

Acceptable Entry Conditions Measurement (CO)	50PPM
Pre-Entry* Test Results Measurement (CO)	0PPM
Date & Time (CO)	04/02/2021
Tester (CO)	NPM
Test Instruments Type (CO)	MULTI RAE
Test Instruments Serial No. (CO)	PGM6208
Calib. Date (CO)	03/30/2021

Condition: (H2S)

Acceptable Entry Conditions Measurement (H2S)	10 PPM
Pre-Entry* Test Results Measurement (H2S)	0PPM
Date & Time (H2S)	04/02/2021
Tester (H2S)	NPM
Test Instruments Type (H2S)	MULTI RAE
Test Instruments Serial No. (H2S)	PGM6208
Calib. Date (H2S)	03/30/2021

Condition: (VOC)

Acceptable Entry Conditions Measurement (VOC)	50 PPM

Client - LMCO -Great Neck- Confined Space Alternate Procedures Permit and Cert

Pre-Entry* Test Results Measurement (VOC)	0PPM
Date & Time (VOC)	04/02/2021
Tester (VOC)	NPM
Test Instruments Type (VOC)	MULTI RAE
Test Instruments Serial No. (VOC)	PGM6208
Calib. Date (VOC)	03/30/2021

Client - LMCO -Great Neck- Confined Space Alternate Procedures Permit and Cert

Section 1

ID Number	EW-1
Description	Well vault at OU1.
Facility Address	1111 Marcus Avenue, Lake Success,NY
Emergency Phone #	
Date of Entry	04/05/2021
Duration:	
From	04/05/2021
To	04/05/2021
Purpose of Entry	Electrical Upgrades.

Alternate Procedures Conditions

1. Only hazard is actual or potential Hazardous Atmosphere.	Yes
2. Air ventilation (forced) sufficient to maintain space safe for entry.	Yes
3. Monitoring and inspection data developed.	Yes
4. Initial entry for data collection performed using EnSafe Permit-Required Confined Space Program.	Yes
5. Monitoring and inspection data available to employees.	Yes
6. Entry into space to be in accordance with alternate procedures.	Yes

Alternate Procedure Requirements

1. Entrant training complete.	Yes
2. Condition making cover removal unsafe. Condition eliminated.	Yes
3. Opening guarded by:	Other
4. Internal Atmosphere	

Condition: (O2)

Acceptable Entry Conditions Measurement (O2)	19.5-23%
Pre-Entry* Test Results Measurement (O2)	20.6%
Date & Time (O2)	04/05/2021
Tester (O2)	NPM

Client - LMCO -Great Neck- Confined Space Alternate Procedures Permit and Cert

Test Instruments Type (O2)	MULTI RAE
Test Instruments Serial No. (O2)	PGM6208
Calib. Date (O2)	04/05/2021

Condition: (LEL)

Acceptable Entry Conditions Measurement (LEL)	10%
Pre-Entry* Test Results Measurement (LEL)	0%
Date & Time (LEL)	04/05/2021
Tester (LEL)	NPM
Test Instruments Type (LEL)	MULTI RAE
Test Instruments Serial No. (LEL)	PGM6208
Calib. Date (LEL)	04/05/2021

Condition: (CO)

Acceptable Entry Conditions Measurement (CO)	50ppm
Pre-Entry* Test Results Measurement (CO)	0ppm
Date & Time (CO)	04/05/2021
Tester (CO)	NPM
Test Instruments Type (CO)	MULTI RAE
Test Instruments Serial No. (CO)	PGM6208
Calib. Date (CO)	04/05/2021

Condition: (H2S)

Acceptable Entry Conditions Measurement (H2S)	10PPM
Pre-Entry* Test Results Measurement (H2S)	0ppm
Date & Time (H2S)	04/05/2021
Tester (H2S)	NPM
Test Instruments Type (H2S)	MULTI RAE
Test Instruments Serial No. (H2S)	PGM6208
Calib. Date (H2S)	04/05/2021

Condition: (VOC)

Acceptable Entry Conditions Measurement (VOC)	50ppm

Client - LMCO -Great Neck- Confined Space Alternate Procedures Permit and Cert

Pre-Entry* Test Results Measurement (VOC)	0ppm
Date & Time (VOC)	04/05/2021
Tester (VOC)	NPM
Test Instruments Type (VOC)	MULTI RAE
Test Instruments Serial No. (VOC)	PGM6208
Calib. Date (VOC)	04/05/2021

Date Submitted: 04/06/2021 01:31 PM
Submitted By: nmccarthy@ensafe.com

Client - LMCO -Great Neck- Confined Space Alternate Procedures Permit and Cert

Section 1

ID Number	EW-1
Description	Well vault.
Facility Address	1111 Marcus Avenue, Lake Success, NY
Emergency Phone #	
Date of Entry	04/06/2021
Duration:	
From	04/06/2021
To	04/06/2021
Purpose of Entry	Electrical upgrade.

Alternate Procedures Conditions

1. Only hazard is actual or potential Hazardous Atmosphere.	Yes
2. Air ventilation (forced) sufficient to maintain space safe for entry.	Yes
3. Monitoring and inspection data developed.	Yes
4. Initial entry for data collection performed using EnSafe Permit-Required Confined Space Program.	Yes
5. Monitoring and inspection data available to employees.	Yes
6. Entry into space to be in accordance with alternate procedures.	Yes

Alternate Procedure Requirements

1. Entrant training complete.	Yes
2. Condition making cover removal unsafe. Condition eliminated.	Yes
3. Opening guarded by:	Other
4. Internal Atmosphere	

Condition: (O2)

Acceptable Entry Conditions Measurement (O2)	19.5-23%
Pre-Entry* Test Results Measurement (O2)	20.6
Date & Time (O2)	04/06/2021
Tester (O2)	NPM

Client - LMCO -Great Neck- Confined Space Alternate Procedures Permit and Cert

Test Instruments Type (O2)	Multi Rae
Test Instruments Serial No. (O2)	PGM6208
Calib. Date (O2)	04/05/2021

Condition: (LEL)

Acceptable Entry Conditions Measurement (LEL)	10%
Pre-Entry* Test Results Measurement (LEL)	0%
Date & Time (LEL)	04/06/2021
Tester (LEL)	NPM
Test Instruments Type (LEL)	Multi Rae
Test Instruments Serial No. (LEL)	PGM6208
Calib. Date (LEL)	04/05/2021

Condition: (CO)

Acceptable Entry Conditions Measurement (CO)	50ppm
Pre-Entry* Test Results Measurement (CO)	0ppm
Date & Time (CO)	04/06/2021
Tester (CO)	NPM
Test Instruments Type (CO)	Multi Rae
Test Instruments Serial No. (CO)	PGM6208
Calib. Date (CO)	04/05/2021

Condition: (H2S)

Acceptable Entry Conditions Measurement (H2S)	10ppm
Pre-Entry* Test Results Measurement (H2S)	0ppm
Date & Time (H2S)	04/06/2021
Tester (H2S)	NPM
Test Instruments Type (H2S)	Multi Rae
Test Instruments Serial No. (H2S)	PGM6208
Calib. Date (H2S)	04/05/2021

Condition: (VOC)

Acceptable Entry Conditions Measurement (VOC)	50ppm

Client - LMCO -Great Neck- Confined Space Alternate Procedures Permit and Cert

Pre-Entry* Test Results Measurement (VOC)	0ppm
Date & Time (VOC)	04/06/2021
Tester (VOC)	NPM
Test Instruments Type (VOC)	Multi Rae
Test Instruments Serial No. (VOC)	PGM6208
Calib. Date (VOC)	04/05/2021

Date Submitted: 04/08/2021 08:02 AM
Submitted By: nmccarthy@ensafe.com

Client - LMCO -Great Neck- Confined Space Alternate Procedures Permit and Cert

Section 1

ID Number	EW-1
Description	Well vault.
Facility Address	1111 Marcus Avenue, Lake Success, NY
Emergency Phone #	911
Date of Entry	04/07/2021
Duration:	
From	04/07/2021
To	04/07/2021
Purpose of Entry	Electrical Upgrade

Alternate Procedures Conditions

1. Only hazard is actual or potential Hazardous Atmosphere.	Yes
2. Air ventilation (forced) sufficient to maintain space safe for entry.	Yes
3. Monitoring and inspection data developed.	Yes
4. Initial entry for data collection performed using EnSafe Permit-Required Confined Space Program.	Yes
5. Monitoring and inspection data available to employees.	Yes
6. Entry into space to be in accordance with alternate procedures.	Yes

Alternate Procedure Requirements

1. Entrant training complete.	Yes
2. Condition making cover removal unsafe. Condition eliminated.	Yes
3. Opening guarded by:	Other
4. Internal Atmosphere	

Condition: (O2)

Acceptable Entry Conditions Measurement (O2)	19.5-23%
Pre-Entry* Test Results Measurement (O2)	20.9
Date & Time (O2)	04/07/2021
Tester (O2)	NPM

Client - LMCO -Great Neck- Confined Space Alternate Procedures Permit and Cert

Test Instruments Type (O2)	Multi Rae
Test Instruments Serial No. (O2)	PGM6208
Calib. Date (O2)	04/05/2021

Condition: (LEL)

Acceptable Entry Conditions Measurement (LEL)	10%
Pre-Entry* Test Results Measurement (LEL)	0%
Date & Time (LEL)	04/07/2021
Tester (LEL)	NPM
Test Instruments Type (LEL)	Multi Rae
Test Instruments Serial No. (LEL)	PGM6208
Calib. Date (LEL)	04/05/2021

Condition: (CO)

Acceptable Entry Conditions Measurement (CO)	50ppm
Pre-Entry* Test Results Measurement (CO)	0ppm
Date & Time (CO)	04/07/2021
Tester (CO)	NPM
Test Instruments Type (CO)	Multi Rae
Test Instruments Serial No. (CO)	PGM6208
Calib. Date (CO)	04/05/2021

Condition: (H2S)

Acceptable Entry Conditions Measurement (H2S)	10ppm
Pre-Entry* Test Results Measurement (H2S)	0ppm
Date & Time (H2S)	04/07/2021
Tester (H2S)	NPM
Test Instruments Type (H2S)	Multi Rae
Test Instruments Serial No. (H2S)	PGM6208
Calib. Date (H2S)	04/05/2021

Condition: (VOC)

Acceptable Entry Conditions Measurement (VOC)	50ppm

Client - LMCO -Great Neck- Confined Space Alternate Procedures Permit and Cert

Pre-Entry* Test Results Measurement (VOC)	0ppm
Date & Time (VOC)	04/07/2021
Tester (VOC)	NPM
Test Instruments Type (VOC)	Multi Rae
Test Instruments Serial No. (VOC)	PGM6208
Calib. Date (VOC)	04/05/2021

Date Submitted: 04/09/2021 08:28 AM
Submitted By: nmccarthy@ensafe.com

Client - LMCO -Great Neck- Confined Space Alternate Procedures Permit and Cert

Section 1

ID Number	EW-1
Description	Extraction well.
Facility Address	1111 Marcus Avenue, Lake Success,NY
Emergency Phone #	911
Date of Entry	04/09/2021
Duration:	
From	04/09/2021
To	04/09/2021
Purpose of Entry	Electrical upgrade.

Alternate Procedures Conditions

1. Only hazard is actual or potential Hazardous Atmosphere.	Yes
2. Air ventilation (forced) sufficient to maintain space safe for entry.	Yes
3. Monitoring and inspection data developed.	Yes
4. Initial entry for data collection performed using EnSafe Permit-Required Confined Space Program.	Yes
5. Monitoring and inspection data available to employees.	Yes
6. Entry into space to be in accordance with alternate procedures.	Yes

Alternate Procedure Requirements

1. Entrant training complete.	Yes
2. Condition making cover removal unsafe. Condition eliminated.	Yes
3. Opening guarded by:	Other
4. Internal Atmosphere	

Condition: (O2)

Acceptable Entry Conditions Measurement (O2)	19.5-23%
Pre-Entry* Test Results Measurement (O2)	20.6
Date & Time (O2)	04/09/2021
Tester (O2)	NPM

Client - LMCO -Great Neck- Confined Space Alternate Procedures Permit and Cert

Test Instruments Type (O2)	Multi Rae
Test Instruments Serial No. (O2)	PGM6208
Calib. Date (O2)	04/05/2021

Condition: (LEL)

Acceptable Entry Conditions Measurement (LEL)	10%
Pre-Entry* Test Results Measurement (LEL)	0%
Date & Time (LEL)	04/09/2021
Tester (LEL)	NPM
Test Instruments Type (LEL)	multi Rae
Test Instruments Serial No. (LEL)	PGM6298
Calib. Date (LEL)	04/05/2021

Condition: (CO)

Acceptable Entry Conditions Measurement (CO)	50ppm
Pre-Entry* Test Results Measurement (CO)	0ppm
Date & Time (CO)	04/09/2021
Tester (CO)	NPM
Test Instruments Type (CO)	multi Rae
Test Instruments Serial No. (CO)	PGM6208
Calib. Date (CO)	04/05/2021

Condition: (H2S)

Acceptable Entry Conditions Measurement (H2S)	10ppm
Pre-Entry* Test Results Measurement (H2S)	0ppm
Date & Time (H2S)	04/09/2021
Tester (H2S)	NPM
Test Instruments Type (H2S)	Multi Rae
Test Instruments Serial No. (H2S)	PGM6208
Calib. Date (H2S)	04/05/2021

Condition: (VOC)

Acceptable Entry Conditions Measurement (VOC)	50ppm

Client - LMCO -Great Neck- Confined Space Alternate Procedures Permit and Cert

Pre-Entry* Test Results Measurement (VOC)	0ppm
Date & Time (VOC)	04/09/2021
Tester (VOC)	NPM
Test Instruments Type (VOC)	multi Rae
Test Instruments Serial No. (VOC)	PGM6208
Calib. Date (VOC)	04/05/2021

Client - LMCO -Great Neck- Confined Space Alternate Procedures Permit and Cert

Section 1

ID Number	RW-1RD/ RW-1RS / RW-100
Description	Recovery well vaults.
Facility Address	1111 Marcus Avenue, Lake Success, NY
Emergency Phone #	911
Date of Entry	04/12/2021
Duration:	
From	04/12/2021
To	04/12/2021
Purpose of Entry	Electrical upgrade

Alternate Procedures Conditions

1. Only hazard is actual or potential Hazardous Atmosphere.	Yes
2. Air ventilation (forced) sufficient to maintain space safe for entry.	Yes
3. Monitoring and inspection data developed.	Yes
4. Initial entry for data collection performed using EnSafe Permit-Required Confined Space Program.	Yes
5. Monitoring and inspection data available to employees.	Yes
6. Entry into space to be in accordance with alternate procedures.	Yes

Alternate Procedure Requirements

1. Entrant training complete.	Yes
2. Condition making cover removal unsafe. Condition eliminated.	Yes
3. Opening guarded by:	Other
4. Internal Atmosphere	

Condition: (O2)

Acceptable Entry Conditions Measurement (O2)	19.5-23%
Pre-Entry* Test Results Measurement (O2)	20.6
Date & Time (O2)	04/12/2021
Tester (O2)	NPM

Client - LMCO -Great Neck- Confined Space Alternate Procedures Permit and Cert

Test Instruments Type (O2)	Multi Rae
Test Instruments Serial No. (O2)	PGM6208
Calib. Date (O2)	04/12/2021

Condition: (LEL)

Acceptable Entry Conditions Measurement (LEL)	10%
Pre-Entry* Test Results Measurement (LEL)	0%
Date & Time (LEL)	04/12/2021
Tester (LEL)	NPM
Test Instruments Type (LEL)	Multi Rae
Test Instruments Serial No. (LEL)	PGM6208
Calib. Date (LEL)	04/12/2021

Condition: (CO)

Acceptable Entry Conditions Measurement (CO)	50ppm
Pre-Entry* Test Results Measurement (CO)	0ppm
Date & Time (CO)	04/12/2021
Tester (CO)	NPM
Test Instruments Type (CO)	multi Rae
Test Instruments Serial No. (CO)	PGM6208
Calib. Date (CO)	04/12/2021

Condition: (H2S)

Acceptable Entry Conditions Measurement (H2S)	10ppm
Pre-Entry* Test Results Measurement (H2S)	0ppm
Date & Time (H2S)	04/12/2021
Tester (H2S)	NPM
Test Instruments Type (H2S)	Multi Rae
Test Instruments Serial No. (H2S)	PGM6208
Calib. Date (H2S)	04/12/2021

Condition: (VOC)

Acceptable Entry Conditions Measurement (VOC)	50ppm

Client - LMCO -Great Neck- Confined Space Alternate Procedures Permit and Cert

Pre-Entry* Test Results Measurement (VOC)	0ppm
Date & Time (VOC)	04/12/2021
Tester (VOC)	NPM
Test Instruments Type (VOC)	MULTI RAE
Test Instruments Serial No. (VOC)	PGM6208
Calib. Date (VOC)	04/12/2021

Client - LMCO -Great Neck- Confined Space Alternate Procedures Permit and Cert

Section 1

ID Number	RW-100
Description	Recovery well vault.
Facility Address	1111 Marcus Avenue, Lake Success,NY
Emergency Phone #	911
Date of Entry	04/13/2021
Duration:	
From	04/13/2021
To	04/13/2021
Purpose of Entry	Electrical upgrade.

Alternate Procedures Conditions

1. Only hazard is actual or potential Hazardous Atmosphere.	Yes
2. Air ventilation (forced) sufficient to maintain space safe for entry.	Yes
3. Monitoring and inspection data developed.	Yes
4. Initial entry for data collection performed using EnSafe Permit-Required Confined Space Program.	Yes
5. Monitoring and inspection data available to employees.	Yes
6. Entry into space to be in accordance with alternate procedures.	Yes

Alternate Procedure Requirements

1. Entrant training complete.	Yes
2. Condition making cover removal unsafe. Condition eliminated.	Yes
3. Opening guarded by:	Other
4. Internal Atmosphere	

Condition: (O2)

Acceptable Entry Conditions Measurement (O2)	19.5-23%
Pre-Entry* Test Results Measurement (O2)	20.9
Date & Time (O2)	04/13/2021
Tester (O2)	NPM

Client - LMCO -Great Neck- Confined Space Alternate Procedures Permit and Cert

Test Instruments Type (O2)	Multi Rae
Test Instruments Serial No. (O2)	PGM6208
Calib. Date (O2)	04/13/2021

Condition: (LEL)

Acceptable Entry Conditions Measurement (LEL)	10%
Pre-Entry* Test Results Measurement (LEL)	0%
Date & Time (LEL)	04/13/2021
Tester (LEL)	NPM
Test Instruments Type (LEL)	Multi Rae
Test Instruments Serial No. (LEL)	PGM6208
Calib. Date (LEL)	04/13/2021

Condition: (CO)

Acceptable Entry Conditions Measurement (CO)	50ppm
Pre-Entry* Test Results Measurement (CO)	0ppm
Date & Time (CO)	04/13/2021
Tester (CO)	NPM
Test Instruments Type (CO)	Multi Rae
Test Instruments Serial No. (CO)	PGM6208
Calib. Date (CO)	04/13/2021

Condition: (H2S)

Acceptable Entry Conditions Measurement (H2S)	10ppm
Pre-Entry* Test Results Measurement (H2S)	0ppm
Date & Time (H2S)	04/13/2021
Tester (H2S)	NPM
Test Instruments Type (H2S)	Multi Rae
Test Instruments Serial No. (H2S)	PGM6208
Calib. Date (H2S)	04/13/2021

Condition: (VOC)

Acceptable Entry Conditions Measurement (VOC)	50ppm

Client - LMCO -Great Neck- Confined Space Alternate Procedures Permit and Cert

Pre-Entry* Test Results Measurement (VOC)	0ppm
Date & Time (VOC)	04/13/2021
Tester (VOC)	NPM
Test Instruments Type (VOC)	Multi Rae
Test Instruments Serial No. (VOC)	PGM6208
Calib. Date (VOC)	04/13/2021

Client - LMCO -Great Neck- Confined Space Alternate Procedures Permit and Cert

Section 1

ID Number	RW-100
Description	Recovery well vault.
Facility Address	1111 Marcus Avenue, Lake Success,NY
Emergency Phone #	911
Date of Entry	04/14/2021
Duration:	
From	04/14/2021
To	04/14/2021
Purpose of Entry	Electrical upgrade .

Alternate Procedures Conditions

1. Only hazard is actual or potential Hazardous Atmosphere.	Yes
2. Air ventilation (forced) sufficient to maintain space safe for entry.	Yes
3. Monitoring and inspection data developed.	Yes
4. Initial entry for data collection performed using EnSafe Permit-Required Confined Space Program.	Yes
5. Monitoring and inspection data available to employees.	Yes
6. Entry into space to be in accordance with alternate procedures.	Yes

Alternate Procedure Requirements

1. Entrant training complete.	Yes
2. Condition making cover removal unsafe. Condition eliminated.	Yes
3. Opening guarded by:	Other
4. Internal Atmosphere	

Condition: (O2)

Acceptable Entry Conditions Measurement (O2)	19.5-23%
Pre-Entry* Test Results Measurement (O2)	20.9%
Date & Time (O2)	04/14/2021
Tester (O2)	NPM

Client - LMCO -Great Neck- Confined Space Alternate Procedures Permit and Cert

Test Instruments Type (O2)	MULTI RAE
Test Instruments Serial No. (O2)	PGM6208
Calib. Date (O2)	04/12/2021

Condition: (LEL)

Acceptable Entry Conditions Measurement (LEL)	10%
Pre-Entry* Test Results Measurement (LEL)	0%
Date & Time (LEL)	04/14/2021
Tester (LEL)	NPM
Test Instruments Type (LEL)	multi Rae
Test Instruments Serial No. (LEL)	PGM6208
Calib. Date (LEL)	04/12/2021

Condition: (CO)

Acceptable Entry Conditions Measurement (CO)	50ppm
Pre-Entry* Test Results Measurement (CO)	0ppm
Date & Time (CO)	04/14/2021
Tester (CO)	NPM
Test Instruments Type (CO)	Multi Rae
Test Instruments Serial No. (CO)	PGM6208
Calib. Date (CO)	04/12/2021

Condition: (H2S)

Acceptable Entry Conditions Measurement (H2S)	10ppm
Pre-Entry* Test Results Measurement (H2S)	0ppm
Date & Time (H2S)	04/14/2021
Tester (H2S)	NPM
Test Instruments Type (H2S)	multi Rae
Test Instruments Serial No. (H2S)	PGM6208
Calib. Date (H2S)	04/12/2021

Condition: (VOC)

Acceptable Entry Conditions Measurement (VOC)	50ppm

Client - LMCO -Great Neck- Confined Space Alternate Procedures Permit and Cert

Pre-Entry* Test Results Measurement (VOC)	1ppm
Date & Time (VOC)	04/14/2021
Tester (VOC)	NPM
Test Instruments Type (VOC)	Multi Rae
Test Instruments Serial No. (VOC)	PGM6208
Calib. Date (VOC)	04/12/2021

Date Submitted: 04/16/2021 08:33 AM
Submitted By: nmccarthy@ensafe.com

Client - LMCO -Great Neck- Confined Space Alternate Procedures Permit and Cert

Section 1

ID Number	RW-100
Description	Recovery well vault.
Facility Address	1111 Marcus Avenue, Lake Success, NY
Emergency Phone #	911
Date of Entry	04/16/2021
Duration:	
From	04/16/2021
To	04/16/2021
Purpose of Entry	Electrical Upgrade.

Alternate Procedures Conditions

1. Only hazard is actual or potential Hazardous Atmosphere.	Yes
2. Air ventilation (forced) sufficient to maintain space safe for entry.	Yes
3. Monitoring and inspection data developed.	Yes
4. Initial entry for data collection performed using EnSafe Permit-Required Confined Space Program.	Yes
5. Monitoring and inspection data available to employees.	Yes
6. Entry into space to be in accordance with alternate procedures.	Yes

Alternate Procedure Requirements

1. Entrant training complete.	Yes
2. Condition making cover removal unsafe. Condition eliminated.	Yes
3. Opening guarded by:	Other
4. Internal Atmosphere	

Condition: (O2)

Acceptable Entry Conditions Measurement (O2)	19.5-23%
Pre-Entry* Test Results Measurement (O2)	20.9%
Date & Time (O2)	04/16/2021
Tester (O2)	NPM

Client - LMCO -Great Neck- Confined Space Alternate Procedures Permit and Cert

Test Instruments Type (O2)	multi Rae
Test Instruments Serial No. (O2)	PGM6208
Calib. Date (O2)	04/12/2021

Condition: (LEL)

Acceptable Entry Conditions Measurement (LEL)	10%
Pre-Entry* Test Results Measurement (LEL)	0%
Date & Time (LEL)	04/16/2021
Tester (LEL)	NPM
Test Instruments Type (LEL)	Multi Rae
Test Instruments Serial No. (LEL)	PGM6208
Calib. Date (LEL)	04/12/2021

Condition: (CO)

Acceptable Entry Conditions Measurement (CO)	50ppm
Pre-Entry* Test Results Measurement (CO)	0ppm
Date & Time (CO)	04/16/2021
Tester (CO)	NPM
Test Instruments Type (CO)	Multi Rae
Test Instruments Serial No. (CO)	PGM6208
Calib. Date (CO)	04/12/2021

Condition: (H2S)

Acceptable Entry Conditions Measurement (H2S)	10ppm
Pre-Entry* Test Results Measurement (H2S)	0ppm
Date & Time (H2S)	04/16/2021
Tester (H2S)	NPM
Test Instruments Type (H2S)	Multi Rae
Test Instruments Serial No. (H2S)	PGM6208
Calib. Date (H2S)	04/12/2021

Condition: (VOC)

Acceptable Entry Conditions Measurement (VOC)	50ppm

Client - LMCO -Great Neck- Confined Space Alternate Procedures Permit and Cert

Pre-Entry* Test Results Measurement (VOC)	0ppm
Date & Time (VOC)	04/16/2021
Tester (VOC)	NPM
Test Instruments Type (VOC)	Multi Rae
Test Instruments Serial No. (VOC)	PGM6208
Calib. Date (VOC)	04/12/2021

Date Submitted: 04/20/2021 07:24 PM
Submitted By: mgibson@ensafe.com

Client - LMCO -Great Neck- Confined Space Alternate Procedures Permit and Cert

Section 1

ID Number	RW-100
Description	
Facility Address	Great Neck South Middle School, 349 Lakeville Rd., Great Neck, NY
Emergency Phone #	911
Date of Entry	04/20/2021
Duration:	
From	04/20/2021
To	04/20/2021
Purpose of Entry	VFD Electrical Upgrades

Alternate Procedures Conditions

1. Only hazard is actual or potential Hazardous Atmosphere.	Yes
2. Air ventilation (forced) sufficient to maintain space safe for entry.	Yes
3. Monitoring and inspection data developed.	Yes
4. Initial entry for data collection performed using EnSafe Permit-Required Confined Space Program.	No
5. Monitoring and inspection data available to employees.	Yes
6. Entry into space to be in accordance with alternate procedures.	Yes

Alternate Procedure Requirements

1. Entrant training complete.	Yes
2. Condition making cover removal unsafe. Condition eliminated.	Yes
3. Opening guarded by:	Temporary Barrier
4. Internal Atmosphere	

Condition: (O2)

Acceptable Entry Conditions Measurement (O2)	20 - 21%
Pre-Entry* Test Results Measurement (O2)	20.9%
Date & Time (O2)	04/20/2021
Tester (O2)	MBG

Client - LMCO -Great Neck- Confined Space Alternate Procedures Permit and Cert

Test Instruments Type (O2)	MiniRae Lite
Test Instruments Serial No. (O2)	PGM6208
Calib. Date (O2)	04/20/2021

Condition: (LEL)

Acceptable Entry Conditions Measurement (LEL)	0%
Pre-Entry* Test Results Measurement (LEL)	0%
Date & Time (LEL)	04/20/2021
Tester (LEL)	MBG
Test Instruments Type (LEL)	MiniRae Lite
Test Instruments Serial No. (LEL)	PGM6208
Calib. Date (LEL)	04/20/2021

Condition: (CO)

Acceptable Entry Conditions Measurement (CO)	0ppm
Pre-Entry* Test Results Measurement (CO)	0ppm
Date & Time (CO)	04/20/2021
Tester (CO)	MBG
Test Instruments Type (CO)	MiniRae Lite
Test Instruments Serial No. (CO)	PGM6208
Calib. Date (CO)	

Condition: (H2S)

Acceptable Entry Conditions Measurement (H2S)	0ppm
Pre-Entry* Test Results Measurement (H2S)	0ppm
Date & Time (H2S)	04/20/2021
Tester (H2S)	MBG
Test Instruments Type (H2S)	MiniRae Lite
Test Instruments Serial No. (H2S)	PGM6208
Calib. Date (H2S)	04/20/2021

Condition: (VOC)

Acceptable Entry Conditions Measurement (VOC)	0ppm

Client - LMCO -Great Neck- Confined Space Alternate Procedures Permit and Cert

Pre-Entry* Test Results Measurement (VOC)	0ppm
Date & Time (VOC)	04/20/2021
Tester (VOC)	MBG
Test Instruments Type (VOC)	MiniRae Lite
Test Instruments Serial No. (VOC)	PGM6208
Calib. Date (VOC)	04/20/2021

Client - LMCO -Great Neck- Confined Space Alternate Procedures Permit and Cert

Section 1

ID Number	RW-100
Description	
Facility Address	349 Lakeville Rd., Greak Neck, NY
Emergency Phone #	911
Date of Entry	04/21/2021
Duration:	
From	04/21/2021
To	04/21/2021
Purpose of Entry	Electrical upgrades

Alternate Procedures Conditions

1. Only hazard is actual or potential Hazardous Atmosphere.	Yes
2. Air ventilation (forced) sufficient to maintain space safe for entry.	Yes
3. Monitoring and inspection data developed.	Yes
4. Initial entry for data collection performed using EnSafe Permit-Required Confined Space Program.	No
5. Monitoring and inspection data available to employees.	Yes
6. Entry into space to be in accordance with alternate procedures.	Yes

Alternate Procedure Requirements

1. Entrant training complete.	Yes
2. Condition making cover removal unsafe. Condition eliminated.	Yes
3. Opening guarded by:	Temporary Barrier
4. Internal Atmosphere	

Condition: (O2)

Acceptable Entry Conditions Measurement (O2)	19.5 - 22%
Pre-Entry* Test Results Measurement (O2)	18.3%
Date & Time (O2)	04/21/2021
Tester (O2)	MBG

Client - LMCO -Great Neck- Confined Space Alternate Procedures Permit and Cert

Test Instruments Type (O2)	MiniRae Lite
Test Instruments Serial No. (O2)	PGM6208
Calib. Date (O2)	04/21/2021

Condition: (LEL)

Acceptable Entry Conditions Measurement (LEL)	0 - 5%
Pre-Entry* Test Results Measurement (LEL)	48%
Date & Time (LEL)	04/21/2021
Tester (LEL)	MBG
Test Instruments Type (LEL)	MiniRae Lite
Test Instruments Serial No. (LEL)	PGM6208
Calib. Date (LEL)	04/21/2021

Condition: (CO)

Acceptable Entry Conditions Measurement (CO)	0-5ppm
Pre-Entry* Test Results Measurement (CO)	47ppm
Date & Time (CO)	04/21/2021
Tester (CO)	MBG
Test Instruments Type (CO)	MiniRae Lite
Test Instruments Serial No. (CO)	PVM6208
Calib. Date (CO)	04/21/2021

Condition: (H2S)

Acceptable Entry Conditions Measurement (H2S)	0 - 2ppm
Pre-Entry* Test Results Measurement (H2S)	10pom
Date & Time (H2S)	04/21/2021
Tester (H2S)	MBG
Test Instruments Type (H2S)	MiniRae Lite
Test Instruments Serial No. (H2S)	PGM6028
Calib. Date (H2S)	04/21/2021

Condition: (VOC)

Acceptable Entry Conditions Measurement (VOC)	0 - 10ppm

Client - LMCO -Great Neck- Confined Space Alternate Procedures Permit and Cert

Pre-Entry* Test Results Measurement (VOC)	94ppm
Date & Time (VOC)	04/21/2021
Tester (VOC)	MBG
Test Instruments Type (VOC)	MiniRae Lite
Test Instruments Serial No. (VOC)	PGM6028
Calib. Date (VOC)	04/21/2021

Client - LMCO -Great Neck- Confined Space Alternate Procedures Permit and Cert

Section 1

ID Number	RW-100
Description	
Facility Address	349 Lakeville Rd., Great Neck, NY
Emergency Phone #	911
Date of Entry	04/22/2021
Duration:	
From	04/22/2021
To	04/22/2021
Purpose of Entry	Electrical upgrades

Alternate Procedures Conditions

1. Only hazard is actual or potential Hazardous Atmosphere.	Yes
2. Air ventilation (forced) sufficient to maintain space safe for entry.	Yes
3. Monitoring and inspection data developed.	Yes
4. Initial entry for data collection performed using EnSafe Permit-Required Confined Space Program.	No
5. Monitoring and inspection data available to employees.	Yes
6. Entry into space to be in accordance with alternate procedures.	Yes

Alternate Procedure Requirements

1. Entrant training complete.	Yes
2. Condition making cover removal unsafe. Condition eliminated.	Yes
3. Opening guarded by:	Temporary Barrier
4. Internal Atmosphere	

Condition: (O2)

Acceptable Entry Conditions Measurement (O2)	20-22%
Pre-Entry* Test Results Measurement (O2)	20.9%
Date & Time (O2)	04/22/2021
Tester (O2)	MBG

Client - LMCO -Great Neck- Confined Space Alternate Procedures Permit and Cert

Test Instruments Type (O2)	MiniRae Lite
Test Instruments Serial No. (O2)	PGM6208
Calib. Date (O2)	04/22/2021

Condition: (LEL)

Acceptable Entry Conditions Measurement (LEL)	0-5%
Pre-Entry* Test Results Measurement (LEL)	0%
Date & Time (LEL)	04/22/2021
Tester (LEL)	MBG
Test Instruments Type (LEL)	MiniRae Lite
Test Instruments Serial No. (LEL)	PGM6208
Calib. Date (LEL)	04/22/2021

Condition: (CO)

Acceptable Entry Conditions Measurement (CO)	0-10ppm
Pre-Entry* Test Results Measurement (CO)	0ppm
Date & Time (CO)	04/22/2021
Tester (CO)	MBG
Test Instruments Type (CO)	MiniRae Lite
Test Instruments Serial No. (CO)	PGM6208
Calib. Date (CO)	04/22/2021

Condition: (H2S)

Acceptable Entry Conditions Measurement (H2S)	0-5ppm
Pre-Entry* Test Results Measurement (H2S)	0ppm
Date & Time (H2S)	04/22/2021
Tester (H2S)	MBG
Test Instruments Type (H2S)	MiniRae Lite
Test Instruments Serial No. (H2S)	PGM6208
Calib. Date (H2S)	04/22/2021

Condition: (VOC)

Acceptable Entry Conditions Measurement (VOC)	0-10ppm

Client - LMCO -Great Neck- Confined Space Alternate Procedures Permit and Cert

Pre-Entry* Test Results Measurement (VOC)	0ppm
Date & Time (VOC)	04/22/2021
Tester (VOC)	MBG
Test Instruments Type (VOC)	MiniRae Lite
Test Instruments Serial No. (VOC)	PGM6208
Calib. Date (VOC)	04/22/2021

Date Submitted: 04/26/2021 04:04 PM
Submitted By: mgibson@ensafe.com

Client - LMCO -Great Neck- Confined Space Alternate Procedures Permit and Cert

Section 1

ID Number	RW-100
Description	
Facility Address	349 Lakeville Rd., Great Neck, NY
Emergency Phone #	911
Date of Entry	04/26/2021
Duration:	
From	04/26/2021
To	04/26/2021
Purpose of Entry	Electrical upgrades

Alternate Procedures Conditions

1. Only hazard is actual or potential Hazardous Atmosphere.	Yes
2. Air ventilation (forced) sufficient to maintain space safe for entry.	Yes
3. Monitoring and inspection data developed.	Yes
4. Initial entry for data collection performed using EnSafe Permit-Required Confined Space Program.	No
5. Monitoring and inspection data available to employees.	Yes
6. Entry into space to be in accordance with alternate procedures.	Yes

Alternate Procedure Requirements

1. Entrant training complete.	Yes
2. Condition making cover removal unsafe. Condition eliminated.	Yes
3. Opening guarded by:	Temporary Barrier
4. Internal Atmosphere	

Condition: (O2)

Acceptable Entry Conditions Measurement (O2)	19.5 - 22%
Pre-Entry* Test Results Measurement (O2)	20.9%
Date & Time (O2)	04/26/2021
Tester (O2)	MBG

Client - LMCO -Great Neck- Confined Space Alternate Procedures Permit and Cert

Test Instruments Type (O2)	MiniRae Lite
Test Instruments Serial No. (O2)	PGM6208
Calib. Date (O2)	04/26/2021

Condition: (LEL)

Acceptable Entry Conditions Measurement (LEL)	0 - 5%
Pre-Entry* Test Results Measurement (LEL)	0%
Date & Time (LEL)	04/26/2021
Tester (LEL)	MBG
Test Instruments Type (LEL)	MiniRae Lite
Test Instruments Serial No. (LEL)	PGM6028
Calib. Date (LEL)	04/26/2021

Condition: (CO)

Acceptable Entry Conditions Measurement (CO)	0-10ppm
Pre-Entry* Test Results Measurement (CO)	0ppm
Date & Time (CO)	04/26/2021
Tester (CO)	MBG
Test Instruments Type (CO)	MiniRae Lite
Test Instruments Serial No. (CO)	PGM6028
Calib. Date (CO)	04/26/2021

Condition: (H2S)

Acceptable Entry Conditions Measurement (H2S)	0-2ppm
Pre-Entry* Test Results Measurement (H2S)	0ppm
Date & Time (H2S)	04/26/2021
Tester (H2S)	MBG
Test Instruments Type (H2S)	MiniRae Lite
Test Instruments Serial No. (H2S)	PGM6028
Calib. Date (H2S)	04/26/2021

Condition: (VOC)

Acceptable Entry Conditions Measurement (VOC)	0-10ppm

Client - LMCO -Great Neck- Confined Space Alternate Procedures Permit and Cert

Pre-Entry* Test Results Measurement (VOC)	0ppm
Date & Time (VOC)	04/26/2021
Tester (VOC)	MBG
Test Instruments Type (VOC)	MiniRae Lite
Test Instruments Serial No. (VOC)	PGM6028
Calib. Date (VOC)	04/26/2021

Client - LMCO -Great Neck- Confined Space Alternate Procedures Permit and Cert

Section 1

ID Number	RW-100
Description	
Facility Address	349 Lakeville Rd, Great Neck, NY
Emergency Phone #	911
Date of Entry	04/27/2021
Duration:	
From	04/27/2021
To	04/27/2021
Purpose of Entry	Electrical upgrades

Alternate Procedures Conditions

1. Only hazard is actual or potential Hazardous Atmosphere.	Yes
2. Air ventilation (forced) sufficient to maintain space safe for entry.	Yes
3. Monitoring and inspection data developed.	Yes
4. Initial entry for data collection performed using EnSafe Permit-Required Confined Space Program.	No
5. Monitoring and inspection data available to employees.	Yes
6. Entry into space to be in accordance with alternate procedures.	Yes

Alternate Procedure Requirements

1. Entrant training complete.	Yes
2. Condition making cover removal unsafe. Condition eliminated.	Yes
3. Opening guarded by:	Temporary Barrier
4. Internal Atmosphere	

Condition: (O2)

Acceptable Entry Conditions Measurement (O2)	20-22%
Pre-Entry* Test Results Measurement (O2)	20.9%
Date & Time (O2)	04/27/2021
Tester (O2)	MBG

Client - LMCO -Great Neck- Confined Space Alternate Procedures Permit and Cert

Test Instruments Type (O2)	MiniRae Lite
Test Instruments Serial No. (O2)	PGM6208
Calib. Date (O2)	04/27/2021

Condition: (LEL)

Acceptable Entry Conditions Measurement (LEL)	0-2%
Pre-Entry* Test Results Measurement (LEL)	0%
Date & Time (LEL)	04/27/2021
Tester (LEL)	MBG
Test Instruments Type (LEL)	MiniRae Lite
Test Instruments Serial No. (LEL)	PGM6208
Calib. Date (LEL)	04/27/2021

Condition: (CO)

Acceptable Entry Conditions Measurement (CO)	0-10ppm
Pre-Entry* Test Results Measurement (CO)	0ppm
Date & Time (CO)	04/27/2021
Tester (CO)	MBG
Test Instruments Type (CO)	MiniRae Lite
Test Instruments Serial No. (CO)	PGM6208
Calib. Date (CO)	04/27/2021

Condition: (H2S)

Acceptable Entry Conditions Measurement (H2S)	0-2ppm
Pre-Entry* Test Results Measurement (H2S)	0ppm
Date & Time (H2S)	04/27/2021
Tester (H2S)	MBG
Test Instruments Type (H2S)	MiniRae Lite
Test Instruments Serial No. (H2S)	PGM6208
Calib. Date (H2S)	04/27/2021

Condition: (VOC)

Acceptable Entry Conditions Measurement (VOC)	0-10ppm

Client - LMCO -Great Neck- Confined Space Alternate Procedures Permit and Cert

Pre-Entry* Test Results Measurement (VOC)	0ppm
Date & Time (VOC)	04/27/2021
Tester (VOC)	MBG
Test Instruments Type (VOC)	MiniRae Lite
Test Instruments Serial No. (VOC)	PGM6208
Calib. Date (VOC)	04/27/2021

Client - LMCO -Great Neck- Confined Space Alternate Procedures Permit and Cert

Section 1

ID Number	RW-100
Description	Recovery well vault.
Facility Address	1111 Marcus Avenue, Lake Success,NY
Emergency Phone #	911
Date of Entry	04/28/2021
Duration:	
From	04/28/2021
To	04/28/2021
Purpose of Entry	Electrical Upgrade

Alternate Procedures Conditions

1. Only hazard is actual or potential Hazardous Atmosphere.	Yes
2. Air ventilation (forced) sufficient to maintain space safe for entry.	Yes
3. Monitoring and inspection data developed.	Yes
4. Initial entry for data collection performed using EnSafe Permit-Required Confined Space Program.	Yes
5. Monitoring and inspection data available to employees.	Yes
6. Entry into space to be in accordance with alternate procedures.	Yes

Alternate Procedure Requirements

1. Entrant training complete.	Yes
2. Condition making cover removal unsafe. Condition eliminated.	Yes
3. Opening guarded by:	Other
4. Internal Atmosphere	

Condition: (O2)

Acceptable Entry Conditions Measurement (O2)	19.5%-23%
Pre-Entry* Test Results Measurement (O2)	21.2
Date & Time (O2)	04/28/2021
Tester (O2)	NPM

Client - LMCO -Great Neck- Confined Space Alternate Procedures Permit and Cert

Test Instruments Type (O2)	Multi Rae
Test Instruments Serial No. (O2)	PGM6208
Calib. Date (O2)	04/27/2021

Condition: (LEL)

Acceptable Entry Conditions Measurement (LEL)	10%
Pre-Entry* Test Results Measurement (LEL)	0%
Date & Time (LEL)	04/28/2021
Tester (LEL)	NPM
Test Instruments Type (LEL)	Multi Rae
Test Instruments Serial No. (LEL)	PGM6208
Calib. Date (LEL)	04/27/2021

Condition: (CO)

Acceptable Entry Conditions Measurement (CO)	50ppm
Pre-Entry* Test Results Measurement (CO)	0ppm
Date & Time (CO)	04/28/2021
Tester (CO)	NPM
Test Instruments Type (CO)	MULTI RAE
Test Instruments Serial No. (CO)	PGM6208
Calib. Date (CO)	04/27/2021

Condition: (H2S)

Acceptable Entry Conditions Measurement (H2S)	10ppm
Pre-Entry* Test Results Measurement (H2S)	0ppm
Date & Time (H2S)	04/28/2021
Tester (H2S)	NPM
Test Instruments Type (H2S)	MULTI RAE
Test Instruments Serial No. (H2S)	PGM6298
Calib. Date (H2S)	04/27/2021

Condition: (VOC)

Acceptable Entry Conditions Measurement (VOC)	50ppm

Client - LMCO -Great Neck- Confined Space Alternate Procedures Permit and Cert

Pre-Entry* Test Results Measurement (VOC)	0ppm
Date & Time (VOC)	04/28/2021
Tester (VOC)	NPM
Test Instruments Type (VOC)	MULTI RAE
Test Instruments Serial No. (VOC)	PGM6208
Calib. Date (VOC)	04/27/2021

Date Submitted: 04/30/2021 07:30 AM
Submitted By: nmccarthy@ensafe.com

Client - LMCO -Great Neck- Confined Space Alternate Procedures Permit and Cert

Section 1

ID Number	RW-1RD, RW-1RS, EW-1, RW-100.
Description	Recovery wells. All tested and results came back normal.
Facility Address	1111 Marcus Avenue, Lake Success,NY
Emergency Phone #	911
Date of Entry	04/29/2021
Duration:	
From	04/29/2021
To	04/29/2021
Purpose of Entry	Finishing electrical upgrades.

Alternate Procedures Conditions

1. Only hazard is actual or potential Hazardous Atmosphere.	Yes
2. Air ventilation (forced) sufficient to maintain space safe for entry.	Yes
3. Monitoring and inspection data developed.	Yes
4. Initial entry for data collection performed using EnSafe Permit-Required Confined Space Program.	Yes
5. Monitoring and inspection data available to employees.	Yes
6. Entry into space to be in accordance with alternate procedures.	Yes

Alternate Procedure Requirements

1. Entrant training complete.	Yes
2. Condition making cover removal unsafe. Condition eliminated.	Yes
3. Opening guarded by:	Other
4. Internal Atmosphere	

Condition: (O2)

Acceptable Entry Conditions Measurement (O2)	19.5%-23%
Pre-Entry* Test Results Measurement (O2)	20.6
Date & Time (O2)	04/29/2021
Tester (O2)	NPM

Client - LMCO -Great Neck- Confined Space Alternate Procedures Permit and Cert

Test Instruments Type (O2)	Multi Rae
Test Instruments Serial No. (O2)	PGM6208
Calib. Date (O2)	04/27/2021

Condition: (LEL)

Acceptable Entry Conditions Measurement (LEL)	10%
Pre-Entry* Test Results Measurement (LEL)	0%
Date & Time (LEL)	04/29/2021
Tester (LEL)	NPM
Test Instruments Type (LEL)	MULTI RAE
Test Instruments Serial No. (LEL)	PGM6208
Calib. Date (LEL)	04/27/2021

Condition: (CO)

Acceptable Entry Conditions Measurement (CO)	50ppm
Pre-Entry* Test Results Measurement (CO)	0ppm
Date & Time (CO)	04/29/2021
Tester (CO)	NPM
Test Instruments Type (CO)	MULTI RAE
Test Instruments Serial No. (CO)	PGM6208
Calib. Date (CO)	04/27/2021

Condition: (H2S)

Acceptable Entry Conditions Measurement (H2S)	10ppm
Pre-Entry* Test Results Measurement (H2S)	0ppm
Date & Time (H2S)	04/29/2021
Tester (H2S)	NPM
Test Instruments Type (H2S)	MULTI RAE
Test Instruments Serial No. (H2S)	PGM6208
Calib. Date (H2S)	04/29/2021

Condition: (VOC)

Acceptable Entry Conditions Measurement (VOC)	50ppm

Client - LMCO -Great Neck- Confined Space Alternate Procedures Permit and Cert

Pre-Entry* Test Results Measurement (VOC)	0ppm
Date & Time (VOC)	04/29/2021
Tester (VOC)	NPM
Test Instruments Type (VOC)	MULTI RAE
Test Instruments Serial No. (VOC)	PGM6208
Calib. Date (VOC)	04/29/2021

Client - LMCO -Great Neck- Confined Space Alternate Procedures Permit and Cert

Section 1

ID Number	RW-100, OU2 influent well vault.
Description	Recovery well vault and an influent vault.
Facility Address	1111 Marcus Avenue, Lake Success,NY
Emergency Phone #	911
Date of Entry	05/03/2021
Duration:	
From	05/03/2021
To	05/03/2021
Purpose of Entry	RW-100 pump test.

Alternate Procedures Conditions

1. Only hazard is actual or potential Hazardous Atmosphere.	Yes
2. Air ventilation (forced) sufficient to maintain space safe for entry.	Yes
3. Monitoring and inspection data developed.	Yes
4. Initial entry for data collection performed using EnSafe Permit-Required Confined Space Program.	Yes
5. Monitoring and inspection data available to employees.	Yes
6. Entry into space to be in accordance with alternate procedures.	Yes

Alternate Procedure Requirements

1. Entrant training complete.	Yes
2. Condition making cover removal unsafe. Condition eliminated.	Yes
3. Opening guarded by:	Other
4. Internal Atmosphere	

Condition: (O2)

Acceptable Entry Conditions Measurement (O2)	19.5%-23%
Pre-Entry* Test Results Measurement (O2)	20.9%
Date & Time (O2)	05/03/2021
Tester (O2)	NPM

Client - LMCO -Great Neck- Confined Space Alternate Procedures Permit and Cert

Test Instruments Type (O2)	Multi Rae
Test Instruments Serial No. (O2)	PGM6208
Calib. Date (O2)	05/03/2021

Condition: (LEL)

Acceptable Entry Conditions Measurement (LEL)	10%
Pre-Entry* Test Results Measurement (LEL)	0%
Date & Time (LEL)	05/03/2021
Tester (LEL)	NPM
Test Instruments Type (LEL)	Multi Rae
Test Instruments Serial No. (LEL)	PGM6208
Calib. Date (LEL)	05/03/2021

Condition: (CO)

Acceptable Entry Conditions Measurement (CO)	50ppm
Pre-Entry* Test Results Measurement (CO)	0ppm
Date & Time (CO)	05/03/2021
Tester (CO)	NPm
Test Instruments Type (CO)	Multi Rae
Test Instruments Serial No. (CO)	PGM6208
Calib. Date (CO)	05/03/2021

Condition: (H2S)

Acceptable Entry Conditions Measurement (H2S)	10ppm
Pre-Entry* Test Results Measurement (H2S)	0ppm
Date & Time (H2S)	05/03/2021
Tester (H2S)	NPM
Test Instruments Type (H2S)	Multi Rae
Test Instruments Serial No. (H2S)	PGM6208
Calib. Date (H2S)	05/03/2021

Condition: (VOC)

Acceptable Entry Conditions Measurement (VOC)	50ppm

Client - LMCO -Great Neck- Confined Space Alternate Procedures Permit and Cert

Pre-Entry* Test Results Measurement (VOC)	0ppm
Date & Time (VOC)	05/03/2021
Tester (VOC)	NPM
Test Instruments Type (VOC)	Multi Rae
Test Instruments Serial No. (VOC)	PGM6208
Calib. Date (VOC)	05/03/2021

Date Submitted: 05/05/2021 01:18 PM
Submitted By: nmccarthy@ensafe.com

Client - LMCO -Great Neck- Confined Space Alternate Procedures Permit and Cert

Section 1

ID Number	EW-1RS, EW-1RD, EW-1
Description	Extraction wells.
Facility Address	1111 Marcus Avenue, Lake Success,NY
Emergency Phone #	911
Date of Entry	05/05/2021
Duration:	
From	05/05/2021
To	05/05/2021
Purpose of Entry	Lighting troubleshooting.

Alternate Procedures Conditions

1. Only hazard is actual or potential Hazardous Atmosphere.	Yes
2. Air ventilation (forced) sufficient to maintain space safe for entry.	Yes
3. Monitoring and inspection data developed.	Yes
4. Initial entry for data collection performed using EnSafe Permit-Required Confined Space Program.	Yes
5. Monitoring and inspection data available to employees.	Yes
6. Entry into space to be in accordance with alternate procedures.	Yes

Alternate Procedure Requirements

1. Entrant training complete.	Yes
2. Condition making cover removal unsafe. Condition eliminated.	Yes
3. Opening guarded by:	Other
4. Internal Atmosphere	

Condition: (O2)

Acceptable Entry Conditions Measurement (O2)	19.5%-23%
Pre-Entry* Test Results Measurement (O2)	20.9
Date & Time (O2)	05/05/2021
Tester (O2)	NPM

Client - LMCO -Great Neck- Confined Space Alternate Procedures Permit and Cert

Test Instruments Type (O2)	Multi Rae
Test Instruments Serial No. (O2)	PGM2500
Calib. Date (O2)	05/05/2021

Condition: (LEL)

Acceptable Entry Conditions Measurement (LEL)	10%
Pre-Entry* Test Results Measurement (LEL)	0%
Date & Time (LEL)	05/05/2021
Tester (LEL)	NPM
Test Instruments Type (LEL)	Multi Rae
Test Instruments Serial No. (LEL)	PGM 2500
Calib. Date (LEL)	05/05/2021

Condition: (CO)

Acceptable Entry Conditions Measurement (CO)	50 ppm
Pre-Entry* Test Results Measurement (CO)	0ppm
Date & Time (CO)	05/05/2021
Tester (CO)	NPM
Test Instruments Type (CO)	Multi Rae
Test Instruments Serial No. (CO)	PGM2500
Calib. Date (CO)	05/05/2021

Condition: (H2S)

Acceptable Entry Conditions Measurement (H2S)	10ppm
Pre-Entry* Test Results Measurement (H2S)	3.5
Date & Time (H2S)	05/05/2021
Tester (H2S)	NPM
Test Instruments Type (H2S)	Multi Rae
Test Instruments Serial No. (H2S)	PGM2500
Calib. Date (H2S)	05/05/2021

Condition: (VOC)

Acceptable Entry Conditions Measurement (VOC)	50 ppm

Client - LMCO -Great Neck- Confined Space Alternate Procedures Permit and Cert

Pre-Entry* Test Results Measurement (VOC)	0ppm
Date & Time (VOC)	05/05/2021
Tester (VOC)	NPM
Test Instruments Type (VOC)	Multi Rae
Test Instruments Serial No. (VOC)	PGM2500
Calib. Date (VOC)	05/05/2021

Date Submitted: 05/07/2021 11:07 AM
Submitted By: nmccarthy@ensafe.com

Client - LMCO -Great Neck- Confined Space Alternate Procedures Permit and Cert

Section 1

ID Number	RW-100
Description	Recovery well vault.
Facility Address	1111 Marcus Avenue, Lake Success,NY
Emergency Phone #	911
Date of Entry	05/07/2021
Duration:	
From	05/07/2021
To	05/07/2021
Purpose of Entry	Hydraulic cement touch ups.

Alternate Procedures Conditions

1. Only hazard is actual or potential Hazardous Atmosphere.	Yes
2. Air ventilation (forced) sufficient to maintain space safe for entry.	Yes
3. Monitoring and inspection data developed.	Yes
4. Initial entry for data collection performed using EnSafe Permit-Required Confined Space Program.	Yes
5. Monitoring and inspection data available to employees.	Yes
6. Entry into space to be in accordance with alternate procedures.	Yes

Alternate Procedure Requirements

1. Entrant training complete.	Yes
2. Condition making cover removal unsafe. Condition eliminated.	Yes
3. Opening guarded by:	Other
4. Internal Atmosphere	

Condition: (O2)

Acceptable Entry Conditions Measurement (O2)	19.5%-23%
Pre-Entry* Test Results Measurement (O2)	20.6
Date & Time (O2)	05/07/2021
Tester (O2)	NPM

Client - LMCO -Great Neck- Confined Space Alternate Procedures Permit and Cert

Test Instruments Type (O2)	Multi Rae
Test Instruments Serial No. (O2)	PGM6208
Calib. Date (O2)	05/03/2021

Condition: (LEL)

Acceptable Entry Conditions Measurement (LEL)	10%
Pre-Entry* Test Results Measurement (LEL)	0%
Date & Time (LEL)	05/07/2021
Tester (LEL)	NPM
Test Instruments Type (LEL)	Multi Rae
Test Instruments Serial No. (LEL)	PGM6208
Calib. Date (LEL)	05/03/2021

Condition: (CO)

Acceptable Entry Conditions Measurement (CO)	50ppm
Pre-Entry* Test Results Measurement (CO)	0ppm
Date & Time (CO)	05/07/2021
Tester (CO)	NPM
Test Instruments Type (CO)	Multi Rae
Test Instruments Serial No. (CO)	PGM6208
Calib. Date (CO)	05/03/2021

Condition: (H2S)

Acceptable Entry Conditions Measurement (H2S)	10ppm
Pre-Entry* Test Results Measurement (H2S)	0ppm
Date & Time (H2S)	05/07/2021
Tester (H2S)	NPM
Test Instruments Type (H2S)	Multi Rae
Test Instruments Serial No. (H2S)	PGM6208
Calib. Date (H2S)	05/03/2021

Condition: (VOC)

Acceptable Entry Conditions Measurement (VOC)	50ppm

Client - LMCO -Great Neck- Confined Space Alternate Procedures Permit and Cert

Pre-Entry* Test Results Measurement (VOC)	0ppm
Date & Time (VOC)	05/07/2021
Tester (VOC)	NPM
Test Instruments Type (VOC)	Multi Rae
Test Instruments Serial No. (VOC)	PGM6208
Calib. Date (VOC)	05/03/2021

Client - LMCO -Great Neck- Confined Space Alternate Procedures Permit and Cert

Section 1

ID Number	RW-1RD, RW-1RS, EW-1.
Description	Recovery well vaults and an extraction well vault.
Facility Address	1111 Marcus Avenue, Lake Success,NY
Emergency Phone #	911
Date of Entry	05/10/2021
Duration:	
From	05/10/2021
To	05/10/2021
Purpose of Entry	Electrical finishing touches.

Alternate Procedures Conditions

1. Only hazard is actual or potential Hazardous Atmosphere.	Yes
2. Air ventilation (forced) sufficient to maintain space safe for entry.	Yes
3. Monitoring and inspection data developed.	Yes
4. Initial entry for data collection performed using EnSafe Permit-Required Confined Space Program.	Yes
5. Monitoring and inspection data available to employees.	Yes
6. Entry into space to be in accordance with alternate procedures.	Yes

Alternate Procedure Requirements

1. Entrant training complete.	Yes
2. Condition making cover removal unsafe. Condition eliminated.	Yes
3. Opening guarded by:	Other
4. Internal Atmosphere	

Condition: (O2)

Acceptable Entry Conditions Measurement (O2)	19.5%-23%
Pre-Entry* Test Results Measurement (O2)	20.6
Date & Time (O2)	05/10/2021
Tester (O2)	NPM

Client - LMCO -Great Neck- Confined Space Alternate Procedures Permit and Cert

Test Instruments Type (O2)	Multi Rae
Test Instruments Serial No. (O2)	PGM6208
Calib. Date (O2)	05/10/2021

Condition: (LEL)

Acceptable Entry Conditions Measurement (LEL)	10%
Pre-Entry* Test Results Measurement (LEL)	0%
Date & Time (LEL)	05/10/2021
Tester (LEL)	NPM
Test Instruments Type (LEL)	Multi Rae
Test Instruments Serial No. (LEL)	PGM6208
Calib. Date (LEL)	05/10/2021

Condition: (CO)

Acceptable Entry Conditions Measurement (CO)	50 PPM
Pre-Entry* Test Results Measurement (CO)	0ppm
Date & Time (CO)	05/10/2021
Tester (CO)	NPM
Test Instruments Type (CO)	Multi Rae
Test Instruments Serial No. (CO)	PGM6208
Calib. Date (CO)	05/10/2021

Condition: (H2S)

Acceptable Entry Conditions Measurement (H2S)	10ppm
Pre-Entry* Test Results Measurement (H2S)	0ppm
Date & Time (H2S)	05/10/2021
Tester (H2S)	NPM
Test Instruments Type (H2S)	Multi Rae
Test Instruments Serial No. (H2S)	PGM6208
Calib. Date (H2S)	05/10/2021

Condition: (VOC)

Acceptable Entry Conditions Measurement (VOC)	50ppm

Client - LMCO -Great Neck- Confined Space Alternate Procedures Permit and Cert

Pre-Entry* Test Results Measurement (VOC)	0ppm
Date & Time (VOC)	05/10/2021
Tester (VOC)	NPM
Test Instruments Type (VOC)	Multi Rae
Test Instruments Serial No. (VOC)	PGM6208
Calib. Date (VOC)	05/10/2021

Client - LMCO -Great Neck- Confined Space Alternate Procedures Permit and Cert

Section 1

ID Number	001
Description	RW-1RS, RW-1RD, EW-1R vaults
Facility Address	1111 Marcus Ave., Lake Success, NY
Emergency Phone #	911
Date of Entry	06/28/2021
Duration:	
From	06/28/2021
To	06/28/2021
Purpose of Entry	VFD punch list and stray voltage investigation

Alternate Procedures Conditions

1. Only hazard is actual or potential Hazardous Atmosphere.	Yes
2. Air ventilation (forced) sufficient to maintain space safe for entry.	No
3. Monitoring and inspection data developed.	Yes
4. Initial entry for data collection performed using EnSafe Permit-Required Confined Space Program.	No
5. Monitoring and inspection data available to employees.	Yes
6. Entry into space to be in accordance with alternate procedures.	Yes

Alternate Procedure Requirements

1. Entrant training complete.	Yes
2. Condition making cover removal unsafe. Condition eliminated.	
3. Opening guarded by:	Railing
4. Internal Atmosphere	

Condition: (O2)

Acceptable Entry Conditions Measurement (O2)	20 - 20.9%
Pre-Entry* Test Results Measurement (O2)	20.9%
Date & Time (O2)	06/28/2021
Tester (O2)	MBG

Client - LMCO -Great Neck- Confined Space Alternate Procedures Permit and Cert

Test Instruments Type (O2)	RAE - QRAE3
Test Instruments Serial No. (O2)	M02A032879
Calib. Date (O2)	06/28/2021

Condition: (LEL)

Acceptable Entry Conditions Measurement (LEL)	0 - 5%
Pre-Entry* Test Results Measurement (LEL)	0%
Date & Time (LEL)	06/28/2021
Tester (LEL)	MBG
Test Instruments Type (LEL)	RAE QRAE3
Test Instruments Serial No. (LEL)	M02A032879
Calib. Date (LEL)	06/28/2021

Condition: (CO)

Acceptable Entry Conditions Measurement (CO)	0 - 10ppm
Pre-Entry* Test Results Measurement (CO)	0ppm
Date & Time (CO)	06/28/2021
Tester (CO)	MBG
Test Instruments Type (CO)	RAE QRAE3
Test Instruments Serial No. (CO)	M02A032879
Calib. Date (CO)	06/28/2021

Condition: (H2S)

Acceptable Entry Conditions Measurement (H2S)	0 - 5ppm
Pre-Entry* Test Results Measurement (H2S)	0ppm
Date & Time (H2S)	06/28/2021
Tester (H2S)	MBG
Test Instruments Type (H2S)	RAE QRAE3
Test Instruments Serial No. (H2S)	M02A032879
Calib. Date (H2S)	06/28/2021

Condition: (VOC)

Acceptable Entry Conditions Measurement (VOC)	

Client - LMCO -Great Neck- Confined Space Alternate Procedures Permit and Cert

Pre-Entry* Test Results Measurement (VOC)	
Date & Time (VOC)	
Tester (VOC)	
Test Instruments Type (VOC)	
Test Instruments Serial No. (VOC)	
Calib. Date (VOC)	

ENSAFE

Jobsite Safety Audit Checklist

Jobsite	UM - VFD / OU1	Date	4/7/21

1. Personal Protective Equipment	Points	YES	NO	N/A
A. High visibility hard hat and safety vest	4	X		
B. Safety glasses	2		X	
C. Face shield or goggles				X
D. Protective toed safety boots	4	X		
E. Full body harness and lanyard or retractable				X
F. Hearing protection				X
G. Respirators				X
H. Gloves (Rings can tear nitrile or latex gloves)	4	X		
16				

2. Heavy Equipment	Points	YES	NO	N/A
A. Have pre-shift inspections been performed?				X
B. Are vehicles being operated safely (speed, capacity, etc.)	4	X		
C. Is operator wearing seat belt?	4	X		
D. Is vehicle in satisfactory condition?	4	X		
E. Are backup alarms operational?	4	X		
F. Are fire extinguisher, lights, brakes, etc., operational?	2		X	
20				

3. Excavations	Points	YES	NO	N/A
A. Are excavations adequately shored or sloped?				X
B. Is access to and from excavations adequate?				
C. Are daily inspections being completed by a competent person?				
D. Are exposed rebar or fence stakes properly capped?				
E. Are excavations adequately barricaded?				
F. Is completed digging and excavation permit available onsite?				

4. Barricades & Signs	Points	YES	NO	N/A
A. Are required barricades in place, in good condition, and maintained?	4	X		
B. Are necessary signs in place, in good condition, and maintained?	4	X		
8				

5. Machine Guarding	Points	YES	NO	N/A
A. Are all nip points guarded?				X
B. Are rotating shafts guarded or is access restricted?	4	X		
C. Are E-stops (E-ropes, E-Buttons, etc.) operative and tested daily?				X
D. Are manufacturer guards in place on all tools and equipment?	4	X		
8				

6. Electrical	Points	YES	NO	N/A
A. Have extension cords been inspected & the inspection documented?				X
B. Are (Ground Fault Circuit Interrupts) GFCIs used as required?	4	X		
C. Are required distances maintained between high voltage lines and mobile equipment?				X
4				

7. Housekeeping	Points	YES	NO	N/A
A. Are work areas organized and clear of clutter and debris?	4	X		
B. Are aisles, footpaths, and walkways clear?	4	X		
C. Is equipment stored properly?	4	X		
12				

ENSAFE

Jobsite Safety Audit Checklist

D. Area all waste streams identified, properly labeled, and disposed?	4	X		
E. Are all containers properly labeled? 8	4	X		
8. Tools	**Points**	**YES**	**NO**	**N/A**
A. Are hand tools appropriate for task and in good condition?	4	X		
B. Are power tools appropriate for task, grounded, & in good condition?	4	X		
C. Is lifting equipment inspected and in good condition? 8				X
D. Are slings, cables & chains inspected & the inspection documented?				X
9. Health	**Points**	**YES**	**NO**	**N/A**
A. Are adequate first aid kits available onsite?	2		X	
B. Are supervisors trained in First Aid?	4	X		
C. Has emergency evacuation plan been developed and tested?	3		X	
D. Are adequate heat stress controls in place? 28	4	X		
E. Are public areas maintained in a sanitary manner?	4	X		
F. Are hazardous chemical product containers properly labeled?	4	X		
G. Are Safety Data Sheets available for all hazardous chemicals onsite?	4	X		
10. Additional Items	**Points**	**YES**	**NO**	**N/A**
A. Hydration supplies available at work sites?	4	X		
B. Hand/face washing provisions available?	4	X		
C. Site specific HASP been reviewed by all employees and documented?	4	X		
D. Daily SWAP usage in place and documented? 24	4	X		
E. Emergency Contact list available for review?	4	X		
G. Are daily toolbox safety meetings being conducted?	4	X		
Total Points	129/136			

Comments

OVERALL JOB SAFETY BEING FOLLOWED - DISCUSS W/TEAM NEEDED AREAS OF IMPROVEMENT, SUCH AS WEARING SAFETY GLASSES CONSISTENTLY, NOT WHEN JUST OPERATING A POWER TOOL, ETC. FIRST-AID/FIRE EXT. / TESTING OF EMERGENCY PLAN IS PM'S RESP. NOT NM / HICNK

Auditors Signature: [signature] **Date:** 4/7/21

ENSAFE

Were audit findings reviewed with site supervisor and assigned to a responsible person for correction? X Yes _____ No
Were the audit findings submitted to Corporate Safety for review? _____ Yes X No

Corrective Actions

Item Number	Responsible Person	Date	Corrective Actions
1.B	Nick McCarthy	4/7/21	Nick needs to be diligent w/ Hands on consistently reminding need for safety glasses / not just when operating equip-b.
2.F.	Marshall Gibson	4/7/21	MBG needs to supply Nick w/ first aid.
9.A	Marshall Gibson	4/7/21	MBG needs to supply Nick w/ first aid kit
9.B	Marshall Gibson	4/7/21	Emergency evacuation plan has been developed but MBG needs to conduct test

Additional Comments: Overall Site Work Area - Review w/ Team. Most issues related to Admin. / Not Nick's Race/Resp.

Total Points Possible: 136	136
Total Points Awarded: 129	129
Percentage Score: 94 1/2	94 1/2
4 = Excellent, 3 = Good, 2 = Items Missing, 1 = Deficient, 0 = Total Non-Compliance	

EnSafe Supervisor: Marshall Gibson **Signature:** [signature] **Date:** 4/7/21

Auditor: Marshall Gibson **Signature:** [signature] **Date:** 4/7/21

ENSAFE

Jobsite Safety Audit Checklist

Jobsite	LM - YFD / 202	Date	6/14/21

1. Personal Protective Equipment	Points	YES	NO	N/A
A. High visibility hard hat and safety vest	4	X		
B. Safety glasses	4	X		
C. Face shield or goggles				X
D. Protective toed safety boots	4	X		
E. Full body harness and lanyard or retractable				X
F. Hearing protection	4	X		
G. Respirators				X
H. Gloves (Rings can tear nitrile or latex gloves)	4	X		
20				

2. Heavy Equipment	Points	YES	NO	N/A
A. Have pre-shift inspections been performed?				X
B. Are vehicles being operated safely (speed, capacity, etc.)	4	X		
C. Is operator wearing seat belt?	4	X		
D. Is vehicle in satisfactory condition?	4	X		
E. Are backup alarms operational?				X
F. Are fire extinguisher, lights, brakes, etc., operational?	4	X		
16				

3. Excavations	Points	YES	NO	N/A
A. Are excavations adequately shored or sloped?				X
B. Is access to and from excavations adequate?				
C. Are daily inspections being completed by a competent person?				
D. Are exposed rebar or fence stakes properly capped?				
E. Are excavations adequately barricaded?				
F. Is completed digging and excavation permit available onsite?				

4. Barricades & Signs	Points	YES	NO	N/A
A. Are required barricades in place, in good condition, and maintained?	4	X		
B. Are necessary signs in place, in good condition, and maintained?				X
4				

5. Machine Guarding	Points	YES	NO	N/A
A. Are all nip points guarded?				X
B. Are rotating shafts guarded or is access restricted?	4	X		
C. Are E-stops (E-ropes, E-Buttons, etc.) operative and tested daily?				X
D. Are manufacturer guards in place on all tools and equipment?	4	X		
8				

6. Electrical	Points	YES	NO	N/A
A. Have extension cords been inspected & the inspection documented?	2		X	
B. Are (Ground Fault Circuit Interrupts) GFCIs used as required?	4	X		
C. Are required distances maintained between high voltage lines and mobile equipment?				X
8				

7. Housekeeping	Points	YES	NO	N/A
A. Are work areas organized and clear of clutter and debris?	4	X		
B. Are aisles, footpaths, and walkways clear?	4	X		
C. Is equipment stored properly?	4	X		
12				

ENSAFE

Jobsite Safety Audit Checklist

D. Area all waste streams identified, properly labeled, and disposed?	4	X		
E. Are all containers properly labeled? 8	4	X		
8. Tools	**Points**	**YES**	**NO**	**N/A**
A. Are hand tools appropriate for task and in good condition?	4	X		
B. Are power tools appropriate for task, grounded, & in good condition?	4	X		
C. Is lifting equipment inspected and in good condition? 8				X
D. Are slings, cables & chains inspected & the inspection documented?				X
9. Health	**Points**	**YES**	**NO**	**N/A**
A. Are adequate first aid kits available onsite?	4	X		
B. Are supervisors trained in First Aid?	4	X		
C. Has emergency evacuation plan been developed and tested?	3		X	
D. Are adequate heat stress controls in place? 23	4	X		
E. Are public areas maintained in a sanitary manner?	4	X		
F. Are hazardous chemical product containers properly labeled?	4	X		
G. Are Safety Data Sheets available for all hazardous chemicals onsite?	4	X		
10. Additional Items	**Points**	**YES**	**NO**	**N/A**
A. Hydration supplies available at work sites?	4	X		
B. Hand/face washing provisions available?				X
C. Site specific HASP been reviewed by all employees and documented?	4	X		
D. Daily SWAP usage in place and documented? 20	4	X		
E. Emergency Contact list available for review?	4	X		
G. Are daily toolbox safety meetings being conducted?	4	X		
Total Points				

Comments

Job Site Work occuring in Generally Safe Manor
Remind Employee need for Coring/ Inspecting
Extension Cords, etc.

Auditors Signature: [signature] **Date:** 6/14/21

ENSAFE

Were audit findings reviewed with site supervisor and assigned to a responsible person for correction? X Yes _____ No
Were the audit findings submitted to Corporate Safety for review? _____ Yes X No

Corrective Actions

Item Number	Responsible Person	Date	Corrective Actions
6.A	ENVIROTECH	6/14/21	INSPECT EXT. CORDS BEFORE PUTTING INTO SERVICE
9.C	MARSHALL GIBSON	6/14/21	~~MRG TO~~ EMER. EVAC. PLAN HAS BEEN DEVELOPED BUT MRG NEEDS TO RUN IT BY TEAM

Additional Comments:

Total Points Possible:	133
Total Points Awarded:	129
Percentage Score:	97%
4 = Excellent, 3 = Good, 2 = Items Missing, 1 = Deficient, 0 = Total Non-Compliance	

EnSafe Supervisor: MARSHALL GIBSON **Signature:** _____ **Date:** 6/14/21

Auditor: MARSHALL GIBSON **Signature:** _____ **Date:** 6/14/21

Near Miss #1: On the first day of demolition at vault RW-1RD, the first vault worked on, Hinck was lifting tools and demoed equipment out of the vault and placing them on the concrete just outside the hatch. A piece of equipment was not laid flat and nearly rolled back into the vault, which would have stuck the worker in the vault who was still positioned under the hatch opening. The team identified this immediately and changed how equipment and tools are removed from the vault – ensuring an assistant is next to the vault and helping to move items away from the edge of the vault opening, as items come up.

Near Miss #2: During construction of the concrete forms for the new stairs at OU2, an Envirotrac worker was cutting long pieces of lumbar into smaller lengths for use. During one cut, the power tool jammed, causing the long side of the board to sway erratically, resulting in an awkward/dangerous position of the power tool blade in relation to the worker's body. Following the incident, work flow was changed such that 1 crew member would hold the long end secure, while the other crew member completed the cut.

Safe Work Modification #1: At the first vault, RW-1RD, during the first day of replacement work, it was noted that the PID on the 4-gas meter was getting high measurements. After some investigation, the source of the VOCs was determined to be from the PVC glue Hinck was using. The second hatch to the vault was opened, to increase ventilation, which reduced the hazard. Moving forward, we increase ventilation by opening additional hatches on days Hinck is using the PVC glue.

Safe Work Modification #2: At vault RW-1RD, Hinck was attempting to lower the temporary fiber control box into the vault. One worker was in the vault, reaching up to grasp the control box as the other worker was lowering it from above. The above worker was bending awkwardly to get the box low enough for the other worker to grasp hold. The above worker realized the bad position his body was in and stopped the procedure. He subsequently got some rope and tied it around the box, such that it could be lowered into the vault using good ergonomics. This process was repeated at the other vaults, moving forward.

APPENDIX I

EQUIPMENT TESTING

Table 1
Equipment Installation Checklist

Document:	Extraction/Recovery Well Commissioning	Description
Project:	Former Unisys Site OU1 and OU2 Extraction/Recovery Well Electrical Upgrades	Initial draft
Location:	Lake Success, New York	Final
		Final Rev 1

Equipment		Dwg. No.	Manufacturer	Wired and Checked			Powered Up and Checked		
Name	Tag #			Date	Eng	RTO[1]	Date	Eng	RTO[1]
Flow Meters									
EW-1R Flow Meter	**FE400**	**D-601**	**McCrometer**		*		4/7/2021	DK	
RW-1RS Flow Meter	**FE510**	**D-601**	**McCrometer**		*		3/24/2021	DK	
RW-1RD Flow Meter	**FE520**	**D-601**	**McCrometer**		*		3/30/2021	DK	
RW-100 Flow Meter	**FE131**	**D-611**	**McCrometer**		*		5/3/2021	DK	
			Installed in correct orientation						
			Check pressure gauges on discharge gauge						
			Check for leaks						
			Pressure test passed						
Well Pumps									
EW-1R Pump	**P-400**	**D-601**	**Grundfos**		*		4/7/2021	DK	
RW-1RS Pump	**P-510**	**D-601**	**Grundfos**		*		3/24/2021	DK	
RW-1RD Pump	**P-500**	**D-601**	**Grundfos**		*		3/30/2021	DK	
RW-100 Pump	**P-100**	**D-611**	**Grundfos**		*		5/3/2021	DK	
			Check connections		*		see above	DK	
			Check rotation		*		**	DK	
			Check for Unusual Noise or Vibration		*		**	DK	
			Pump Performance at 50,75,100% speed (4 data points at each speed including full and zero flow)		*		**	DK	
Vault Electrical									
EW-1R			Removal and Replacement of JBs and conduit per Design Confirmed		*		4/7/2021	DK	
			Light Switches, Receptables, and Lights Replaced and Tested		*		4/7/2021	DK	
RW-1RS			Removal and Replacement of JBs and conduit per Design Confirmed		*		3/24/2021	DK	
			Light Switches, Receptables, and Lights Replaced and Tested		*		3/24/2021	DK	
RW-1RD			Removal and Replacement of JBs and conduit per Design Confirmed		*		3/30/2021	DK	
			Light Switches, Receptables, and Lights Replaced and Tested		*		3/30/2021	DK	
RW-100			Removal and Replacement of JBs and conduit per Design Confirmed		*		5/3/2021	DK	
			Light Switches, Receptables, and Lights Replaced and Tested		*		5/3/2021	DK	
O&M Files									
			Operation and Maintenance Checklists Developed						
			Submittals, Manuals, Contact Lists, etc. Assembled in O&M Document						

Notes:

Not applicable

* Wire connections confirmed by electrician but not formally documented. Checked by engineer through the next power up step.

** Dates of Pump Performance Testing and checks are on dates of re-commissioning.

[1] RTO checks are at the discetion of the RTO if on site and overseeing testing. In general RTO relied on the Engineer for testing documentation.

Table 2
On-Site Panel Demonstration Test Checklist

Document:	Extraction/Recovery Well Commissioning	Revision	By	Date	Chk by	Date	Description
Project:	Former Unisys Site OU1 and OU2 Extraction/Recovery Well Electrical Upgrades	A	SCP	9/11/2019			Initial draft
Location:	Lake Success, New York	B	SCP	10/11/2019			Final
		C	ERC	2/25/2021	SCP	2/26/2021	Final Rev 1

Equipment	Control Function Test	RW-100				EW-1R				RW-1RD				RW-1RS			
Name		Tag #	Date	Eng	RTO[1]	Tag #	Date	Eng	RTO[1]	Tag #	Date	Eng	RTO[1]	Tag #	Date	Eng	RTO[1]
	Contractor Documentation Confirming Testing of I/O	NA				NA				NA				NA			
Starter Panel																	
	Panel Power Light Works	YL100A	5/3/2021	DK		NA				NA				NA			
	Pump Run Light Works	YL100B	5/3/2021	DK		NA				NA				NA			
	Pump Off Light Works	YL100C	5/3/2021	DK		NA				NA				NA			
	VFD Fault Light Works	YL100D	5/3/2021	DK		NA				NA				NA			
	Front Panel Speed Indicator on Keypad Works	SIC100	5/3/2021	DK		NA				NA				NA			
	Local Off Remote Switch Works	SS100A	5/3/2021	DK		NA				NA				NA			
	VFD Bypass Switch Works	SS100B	5/3/2021	DK		NA				NA				NA			
	Speed Input Keypad Works	SS100C	5/3/2021	DK		NA				NA				NA			
	E-Stop Works	PB100A	5/3/2021	DK		NA				NA				NA			
	Reset Works	PB100C	5/3/2021	DK		NA				NA				NA			
	Panel Intrusion Switch Works	ZS100A	5/3/2021	DK		NA				NA				NA			
	Manual Control On-Off Handswitch Works	HS100	5/3/2021	DK		NA				NA				NA			
	VFD Key Pad Works	--	5/3/2021	DK		NA				NA				NA			
Remote Control Panel																	
	Panel Power Light Works	YL100D	5/3/2021	DK		Not listed	4/7/2021	DK		Not listed	3/30/2021	DK		Not listed	3/24/2021	DK	
	Well Pump Hand and Off Work	SS100	5/3/2021	DK		SS400	4/7/2021	DK		SS510	3/30/2021	DK		SS500	3/24/2021	DK	
	Pump Run Light Works	YL100A	5/3/2021	DK		YL400A	4/7/2021	DK		YL510A	3/30/2021	DK		YL500A	3/24/2021	DK	
	Pump Fail Light Works	YL100B	5/3/2021	DK		YL400F	4/7/2021	DK		YL510F	3/30/2021	DK		YL500F	3/24/2021	DK	
	E-Stop Works	PB100A	5/3/2021	DK		PB400A	4/7/2021	DK		PB510A	3/30/2021	DK		PB500A	3/24/2021	DK	
	E-Stop Active Light Works	YL100C	5/3/2021	DK		PB400A	4/7/2021	DK		PB510A	3/30/2021	DK		PB500A	3/24/2021	DK	
	Alarm Reset Works	PB100B	5/3/2021	DK		PB400B	4/7/2021	DK		PB510B	3/30/2021	DK		PB500B	3/24/2021	DK	
	Vault Intrusion Switch Works	ZS100C	5/3/2021	DK		NA				NA				NA			
	Panel Intrusion Switch Works	ZS100B	5/3/2021	DK		NA				NA				NA			
	Flow Meter and Rate Readout Work	FI100	NA		NA	NA				NA				NA			
	Level Indication Works	LI100	5/3/2021	DK		NA				NA				NA			
	Pressure Indication Works	PI101	5/3/2021	DK		NA				NA				NA			
	Flow Alarm Low Works	FAL100	5/3/2021	DK		YL400-FAL	4/7/2021	DK		YL510-FAL	3/30/2021	DK		YL500-FAL	3/24/2021	DK	
	Level Alarm High Works	LAH100	5/3/2021	DK		YL400-LAH	4/7/2021	DK		YL510-LAH	3/30/2021	DK		YL500-LAH	3/24/2021	DK	
	Flex I/O Reset Works	PB100	5/3/2021	DK		Not listed	4/7/2021	DK		Not listed	3/30/2021	DK		Not listed	3/24/2021	DK	
Main Control Panel																	
	Pump Status Light in RUN Works	YL100G	5/3/2021	DK		YL400A	4/7/2021	DK		YL510A	3/30/2021	DK		YL500A	3/24/2021	DK	
	Pump Status Light in FAIL Works	YI100W	5/3/2021	DK		YL400F	4/7/2021	DK		YL510F	3/30/2021	DK		YL500F	3/24/2021	DK	
	Hand Off Auto Switch Works	SS100B	5/3/2021	DK		SS400	4/7/2021	DK		SS510	3/30/2021	DK		SS500	3/24/2021	DK	
	Vault High Level Alarm Light Works	NA				YL400-LAH	4/7/2021	DK		YL510-LAH	3/30/2021	DK		YL500-LAH	3/24/2021	DK	
	Flow Alarm Low Light Works	NA				YL400-FAL	4/7/2021	DK		YL510-FAL	3/30/2021	DK		YL500-FAL	3/24/2021	DK	

Notes:
Not applicable

Notes:
Not applicable

* I/O confirmed by electrician but not formally documented. Checked by engineer through the next performance monitoring steps.

[1] RTO checks are at the discetion of the RTO if on site and overseeing testing. In general RTO relied on the Engineer for testing documentation.

Table 3
SCADA and Autodialer Test Checklist

Document:	Extraction/Recovery Well Commissioning	Revision	By	Date	Chk by	Date	Description
Project:	Former Unisys Site OU1 and OU2 Extraction/Recovery Well Electrical Upgrades	A	SCP	9/11/2019		9/11/2019	Initial draft
Location:	Lake Success, New York	B	SCP	10/11/2019			Final
		C	ERC	2/25/2021	SCP	2/26/2021	Final Rev. 1

Equipment Name	Control Function Test	OU2 HMI/RW-100 Tag #	Date	Eng	RTO[1]	OU1 HMI/EW-1R Tag #	Date	Eng	RTO[1]	OU1 HMI/RW-1RD Tag #	Date	Eng	RTO[1]	OU1 HMI/RW-1RS Tag #	Date	Eng	RTO[1]
HMI																	
	Modified Screens Submitted and Approved		7/20/2021	SCP													
	Pump Status in RUN Works	YI100A	5/3/2021	DK		YI400A	4/7/2021	DK		YI510A	3/30/2021	DK		YI500A	3/24/2021	DK	
	Pump Status FAIL Works	YI100D	5/3/2021	DK		YI400D	4/7/2021	DK		YI510D	3/30/2021	DK		YI500D	3/24/2021	DK	
	Pump Start Switch Works	SS100A	5/3/2021	DK		SS400A	4/7/2021	DK		SS510A	3/30/2021	DK		SS500A	3/24/2021	DK	
	Pump Stop Switch Works	SS100B	5/3/2021	DK		SS400B	4/7/2021	DK		SS510B	3/30/2021	DK		SS500B	3/24/2021	DK	
	Pressure Indication Works	PI101	5/3/2021	DK		NA				NA				NA			
	Pressure Alarm Low Works	PAL101	5/3/2021	DK		NA				NA				NA			
	Pressure Alarm High Works	PAH101	5/3/2021	DK		NA				NA				NA			
	Vault High Level Alarm Works	**LAH111**	5/3/2021	DK		**LAH400**	4/7/2021	DK		**LAH510**	3/30/2021	DK		**LAH500**	3/24/2021	DK	
	Vault High High Level Alarm Works	**LAH111**	5/3/2021	DK		**LAHH400**	4/7/2021	DK		**LAHH510**	3/30/2021	DK		**LAHH500**	3/24/2021	DK	
	Vault High Level Alarm Works					YI401	4/7/2021	DK									
	Vault High High Level Alarm Works					ZSF401	4/7/2021	DK									
	Flow Totalizer Works	FQ131	5/3/2021	DK		FQ400	4/7/2021	DK		FQ510	3/30/2021	DK		FQ500	3/24/2021	DK	
	Flow Indicator Works	FI131	5/3/2021	DK		FI400	4/7/2021	DK		FI510	3/30/2021	DK		FI500	3/24/2021	DK	
	Flow Alarm Low Works	**FAL131**	5/3/2021	DK		**FAL400**	4/7/2021	DK		**FAL510**	3/30/2021	DK		**FAL500**	3/24/2021	DK	
	E-Stop Button Works	PB100A	5/3/2021	DK		PB400A	4/7/2021	DK		PB510A	3/30/2021	DK		PB500A	3/24/2021	DK	
	Alarm Reset Button Works	PB100B	5/3/2021	DK		PB400B	4/7/2021	DK		PB510B	3/30/2021	DK		PB500B	3/24/2021	DK	
	Pump Speed Indicator Works	SI100D	5/3/2021	DK	ON VFD	NA				NA				NA			
	Pump Voltage Indicator Works	EI100	5/3/2021	DK	ON VFD	NA				NA				NA			
	Pump Amps Indication Works	II100	5/3/2021	DK	ON VFD	NA				NA				NA			
	Pump Speed Controller Works and Input Limits are programmed	SC100C	5/5/2021	DK		NA				NA				NA			
	Flow Alarm Low is Operator Adjustable but Can't be Set below minimum in specifications	FAL131	5/3/2021	DK		FAL400	4/7/2021	DK		FAL510	3/30/2021	DK		FAL500	3/24/2021	DK	
	Vault Level Switch (LSH or LSHH) Interlock will Disable Pump	LAH111	5/3/2021	DK		LAH400	4/7/2021	DK		LAH510	3/30/2021	DK		LAH500	3/24/2021	DK	
	Vault Level Switch (LSH or LSHH) Interlock will Disable Pump	LAH111	5/3/2021	DK		LAHH400	4/7/2021	DK		LAHH510	3/30/2021	DK		LAHH500	3/24/2021	DK	
	Vault Level Switch (LSH or LSHH) Interlock will Disable Pump					YI401	4/7/2021	DK									
	Vault Level Switch (LSH or LSHH) Interlock will Disable Pump					ZSF401	4/7/2021	DK									
	Low Flow Alarm Interlock will Disable Pump	FAL131	5/3/2021	DK		FAL400	4/7/2021	DK		FAL510	3/30/2021	DK		FAL500	3/24/2021	DK	
	Confrim Intrusion Alarm	ZA100A	5/3/2021	DK		NA				NA				NA			
	Confrim Intrusion Alarm	ZA100B	5/3/2021	DK		NA				NA				NA			
	Confrim Intrusion Alarm	ZA100C	5/3/2021	DK		NA				NA				NA			
	Remote HOA Status Indication	YE100B/YI100C	5/3/2021	DK			4/7/2021	DK			3/30/2021	DK			3/24/2021	DK	
	Confirm Plant Shutdown will Disable Pump		5/5/2021	DK			4/7/2021	DK			3/30/2021	DK			3/24/2021	DK	
	Confirm duplication of OU1 Screens at SSDS and OU2 plants		5/5/2021	DK			4/20/2021	DK			3/30/2021	DK			3/24/2021	DK	
	Confirm duplication of OU2 Screens at SSDS and OU1 plants		5/5/2021	DK			4/2/2021	DK			3/30/2021	DK			3/24/2021	DK	
Auto Dialer																	
	Vault Level Alarm High High Callout Works	LAHH1111	5/3/2021	DK		LAHH400	4/7/2021	DK		LAHH510	3/30/2021	DK		LAHH500	3/24/2021	DK	
	Flow Alarm Low Callout Works	FAL131	5/3/2021	DK		FAL400	4/7/2021	DK		FAL510	3/30/2021	DK		FAL500	3/24/2021	DK	
	General Fault Callout Works	YI100D	NA	NA		YI400D	NA	NA		YI510D	NA	NA		YI500D	NA	NA	

Notes:
Confirm duplication of the screen changes at remote locations (at SSDS and OU2 for OU1 screens and at SSDS and OU1 for OU2 screens
All alarms (in **bold**) to be confirmed on both the SCADA screen and the WIN911 notification system.
Not applicable
[1] RTO checks are at the discetion of the RTO if on site and overseeing testing. In general RTO relied on the Engineer for testing documentation.

GREATROCK Automation

97 Rome Street
Farmingdale, NY 11735
Phone: (631) 270-1508

REPORT

1. On May 19th, 2021 Great Rock Automation successfully completed startup at Lockheed Martin OU-1 for a TCI HGA Series Active Harmonic Filter.

2. The HGA Active Filter has successfully reduced harmonics and corrected the power factor at the Lockheed Martin Facility OU-1.

3. The table below shows the measurements taken from the Active Filter's touch screen before and during operation. Please note while the VTHD may have increased, a VTHD of 2.6% is still acceptable according to IEEE 519-2014 - IEEE Recommended Practice and Requirements for Harmonic Control in Electric Power Systems

	Prior to Active Filter Operation	During Active Filter Operation
Power Factor	-0.95	1.00
Current Total Harmonic Distortion (ITHD)	16.5%	5.2%
Current Total Demand Distortion (ITDD)	3.3%	1.0%
Voltage Total Harmonic Distortion (VTHD)	1.8%	2.6%

4. The Voltage/Current plot prior to operation shows a non-linear current waveform:



5. The Voltage/Current plot during operation shows a linear current waveform:



The information contained herein is the property Great Rock Automation and constitutes confidential proprietary information which shall not be used, duplicated, or disclosed to any third party without the prior written consent of Great Rock Automation.

Copyright © 2021 Great Rock Automation

Hammond Power Solutions

HPS TruWave™

Active Harmonic Filter
Pre-Start-up Checklist

Performed by

SDM METRO

215 N. Main Street
Freeport, NY 11520
Phone: 516-536-2600

HPS TruWave Active Harmonic Filter Pre-Start-up Checklist

Please contact Hammond Power Solutions (HPS) 4 weeks prior to your desired date to schedule a start up. In order to help us provide the start-up commissioning of your TruWave Active Harmonic Filter (AHF) without any delay, extra cost, voiding or limiting of the warranty, we require the following checklist to be completed, signed and returned to Hammond Power Solutions via email at least 24 hours prior to scheduling.

Electricians - please refer to local electrical regulations and the supplied TruWave Operations and Maintenance Manual (O&M) for proper installation practices. If there are any installation questions, please contact Hammond Power Solutions or our local representative.

Model Number	Serial #:
WAHF1K100A	11222-3/21

☐ All of the AHF's are wired and ready for start-up.
If all AHF's are not ready, ____ are ready.

Note: Our start-up service assumes all AHF's are available for start-up at the same time (up to 5 per day). Extra trips due to AHF's not being ready will result in extra travel charges.

Project and Site Coordination

☐ Jobsite is available for shutdown to accommodate the equipment start-up. Delays caused by the inability to shut down the equipment are not included in our start-up service and will be invoiced.

☐ Customer's representatives scheduled to be available for training at the time of our start-up visit. Additional job visits for customer training (i.e. Owner's demos) are not included unless explicitly stated on our confirming order.

☐ Current Transformers installed on the service bus and wired to the AHF's per the O&M Manual?

☐ Verify no Power Factor Correction Capacitors are installed between the AHF's connection to the main bus and the Variable Frequency Drives that are being mitigated.

☐ Sufficient overhead lighting available for our services?

☐ The AHF located indoors. If not, please coordinate a time and date when the weather is suitable for start-up.
☐ The job site accessible by a standard passenger vehicle.

Equipment Condition

☐ The AHF been installed without any shipping or installation damage. Shipping Damage is not covered by the HPS warranty. Shipping Damage will not be repaired during a start-up visit. Any freight claims must be filed with the freight company and HPS should be notified.
☐ The AHF clean and free of dust and debris. Cleaning dust and/or debris from the enclosure is not part of our start-up service.
☐ The area around the AHF is clean and safe to enter and move around in. Delays caused by site conditions are not covered by the start-up service.
☐ Terminating conduit to the AHF can cause debris and conductive material on the AHF surfaces. Surfaces are clean from debris. Cleaning the enclosure and AHF circuitry is not part of the start-up service and will be invoiced. Damage caused by foreign objects (metal shavings, etc.) in our circuitry is not covered by warranty.
☐ The AHF is mounted per the spacing requirements specified in the manual. Damage caused by restriction of air flow is not covered under warranty. Extra labor on start-up services caused by inaccessibility due to improper mounting will be invoiced.
☐ The AHF in a clean, uncontaminated environment. Do not attempt to operate the AHF in a heavy dust environment unless a suitable enclosure and cooling is provided to stop dust from entering enclosure. Damage due to contamination is not covered by warranty. Do not attempt to operate the AHF with non-HPS provided dust covers. Heat damage is not covered by warranty.
☐ The AHF in an environment with humidity below 95% and temperatures between 16 °C (60 °F) and 40 °C (104 °F)? Check for heat sources.

Electrical Installation

☐ Review HPS TruWave Operations and Maintenance (O&M) Manual thoroughly before performing field start-up procedure
☐ Installation per one-line drawings supplied at bidding time. If Not:
    ☐ Updated one-line drawings sent for review.
☐ Confirm proper input voltage
☐ Confirm that line current sensors are installed on the proper phases in the proper orientation, and wired properly to the CT interface board. Failure to do so may result in additional start-up time if TruWave diagnostics indicates improper installation.
☐ All wiring and cabling tightened per torque requirements in O&M Manual
☐ Grounding wire is installed to the chassis grounding lug. Grounding the conduit and attaching it to the removable conduit plate is inadequate for safe and reliable operation.
☐ The grounding wire is terminated to the utility grounding bus bar or a properly installed grounding rod.
☐ Shielded wire is installed for the DC control circuit interface connections.

■ The shielded wire is terminated to the AHF grounding terminal and is terminated on one end only.
■ The interconnect wiring is terminated in the AHF per the installation diagram provided with the O&M Manual?
■ The AHF to Main Buss cabling is installed in a conduit separate from other wiring.
■ Check Power and Control fuses for continuite
■ Power factor correction capacitors are not located in devices between the AHF and the VFD's or other devices for which Harmonic Mitigation is being provided.
■ All power and control wiring is installed, terminated and ready for power and testing. Delays and/or extra trips due to incomplete installation are not included in our start-up service and will be invoiced.
■ The system is completed and ready for operational testing.

System Start-Up – **To Be Completed at Start-Up Time**

■ Energize system according to the procedure in the Quick Start guide or O&M Manual.
■ Review CT setup display and follow procedure in the quick start Guide to verify proper CT installation.
☐ Perform any corrective action if required by TruWave Diagnostics.
☐ Document any corrective actions.
■ Enable system using the "RUN" command icon on front panel touch screen.
■ Confirm proper operation of system by reviewing information displayed on the "OPERATING STATUS" display screens.
☐ Perform any corrective action if required by TruWave Diagnostics.
☐ Document any corrective actions.
■ Obtain system status report via USB connection when system is fully operational and save information for reference to Flash Drive.
■ Verify and record harmonic correction data (Line and Load; THD I%, Power factor, RMS current, etc.).
☐ If a separate power meter verification is required, end user or installer to supply meter and record values.

☐ The control contractor's wiring is complete and operational for system performance test from the AHF's integral monitoring circuits and HMI. Unless explicitly stated in our confirming order, additional jobsite visits for control start-up are not included, and will be invoiced.

WARNING! Damage caused by applying power to the AHF prior to our start-up services is not covered under the start-up services. Warranty coverage may be affected if power is applied prior to our checkout.

Invoiced amounts per HPS standard rates and not per start-up quotation. Additional invoices must be placed by customer before work is completed.

Project Name:	Lockheed Martin
Project Address:	60 Tanners Road
City, State/Province:	Lake Success, NY 11020
Site Contact:	Bobby Herrman
Contact Phone:	631-255-2785
Contact E-Mail:	
Alternate Contact:	
Alternate Phone:	
Alternate E-Mail:	

Harmonic Filter Commissioning
Lockheed Martin
60 Tanners Road
Lake Success, NY 11020

Date: May 28, 2021

Prepared for:

Jeff Smith
Turtle and Hughes Inc
1000 Prime PL
Hauppauge, NY 11788

Prepared by:

Keith Campbell
SDM METRO
215 N. Main St.
Freeport, NY 11520
Ph: 516-536-2600
Fax: 516-764-0755

-Table of Contents-

Executive Summary **3**

Hammond WAHF1K100A Harmonic Filter **4**

A Phase Current 5
B Phase Currents 6
C Phase Currents 7
Display Readings 8
Unit Parameters 9

Photographs **11**

Equipment Utilized **13**

Executive Summary

On Monday, May 10th, 2021 commissioning was performed at Lockheed Martin, located at 62 Olive St. Lake Success, NY 11020. The system under test was the Hammond WAHF1K100A Harmonic Filter.

Infrared Analysis

An infrared scan was performed on all UPS components, wiring, connections, as well as all associated input and output distribution during the burn in. *There were no infrared issues to report.* A sample of the infrared scan is shown in the report.

Hammond WAHF1K100A Harmonic Filter

The following pages show the waveforms recorded by harmonic filter during commissioning on the unit.

A Phase Current

The following waveform represents the input current, load current, and the harmonic filter current for A phase during commissioning.

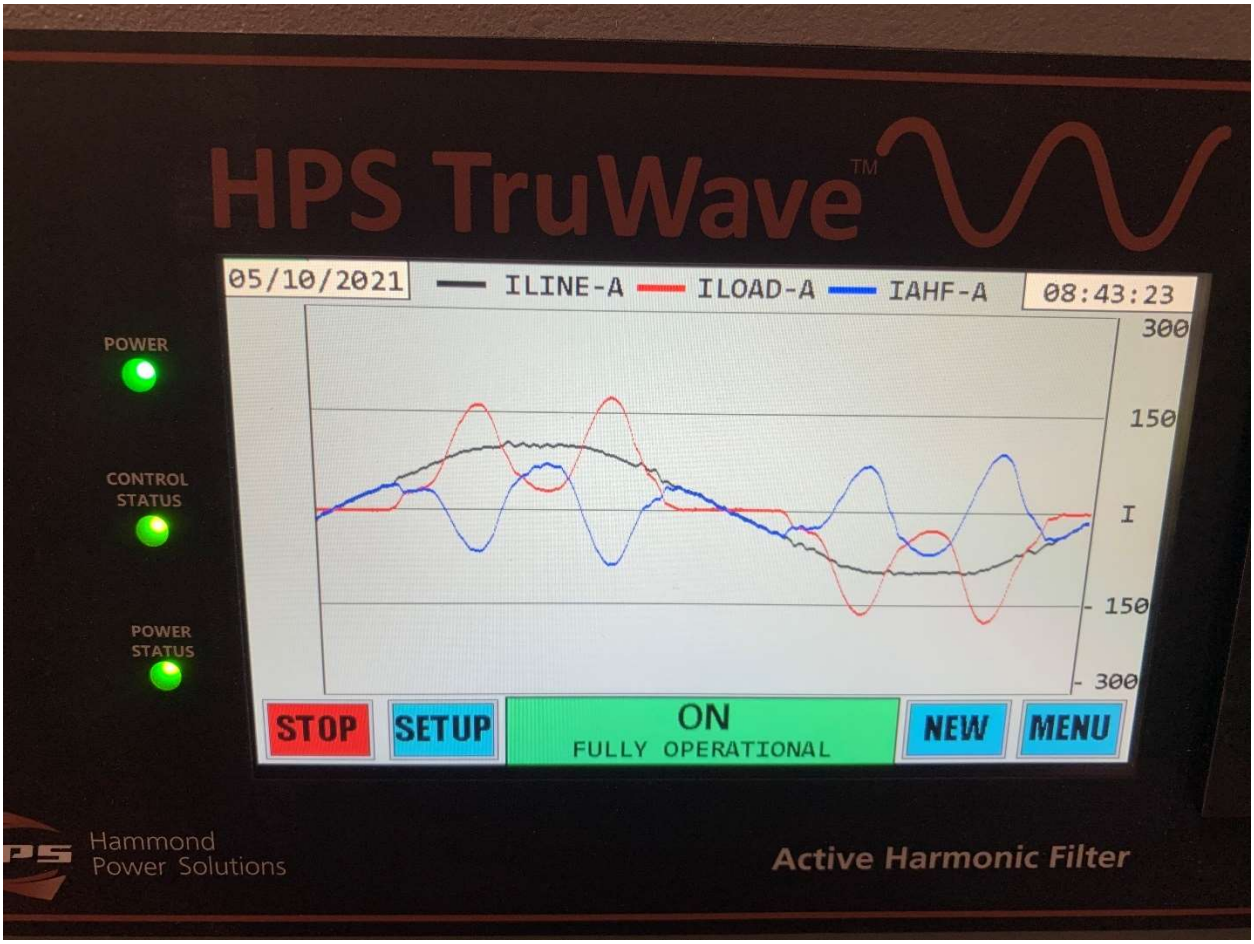

B Phase Currents

The following waveform represents the input current, load current, and the harmonic filter current for B phase during commissioning.

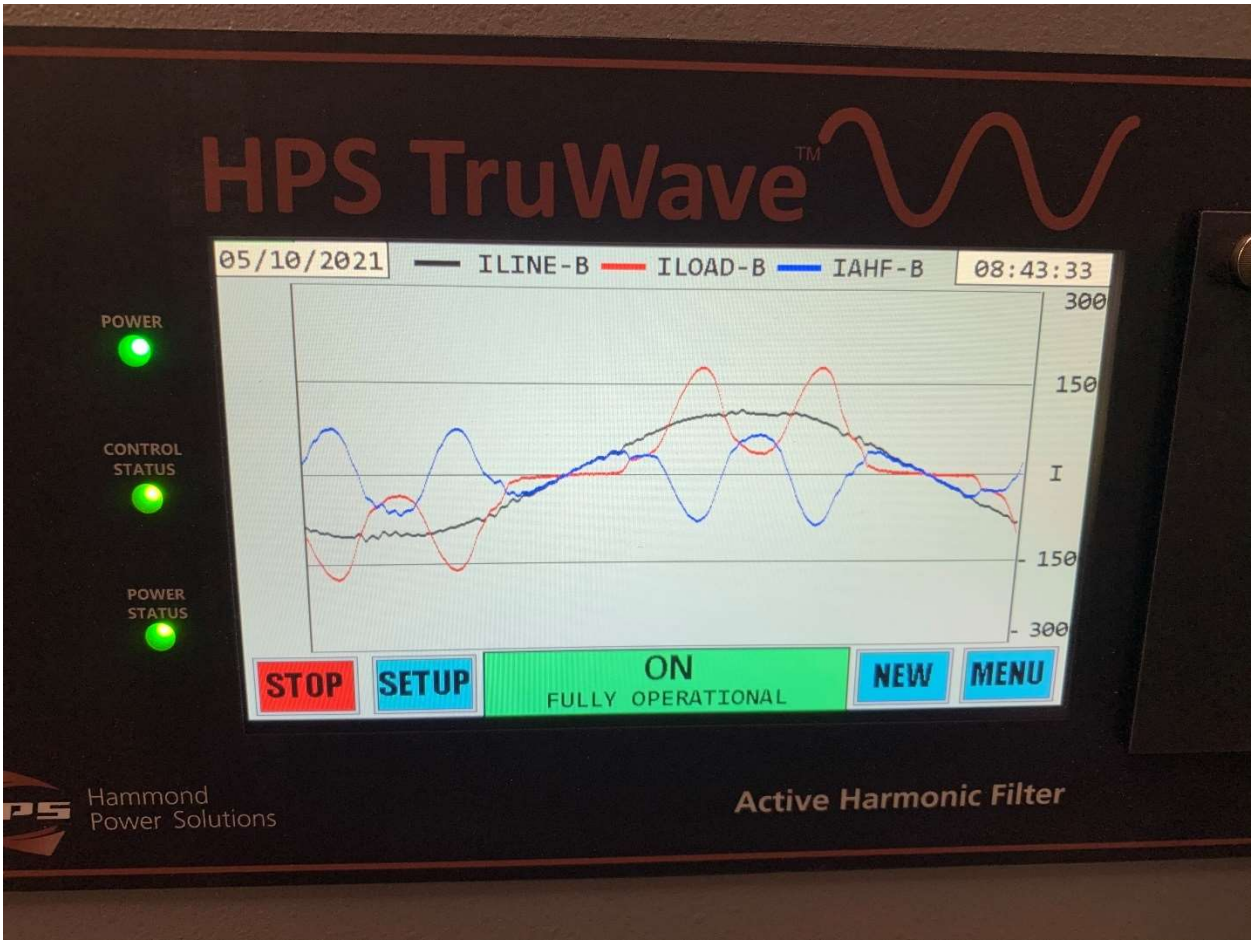

C Phase Currents

The following waveform represents the input current, load current, and the harmonic filter current for C phase during commissioning.

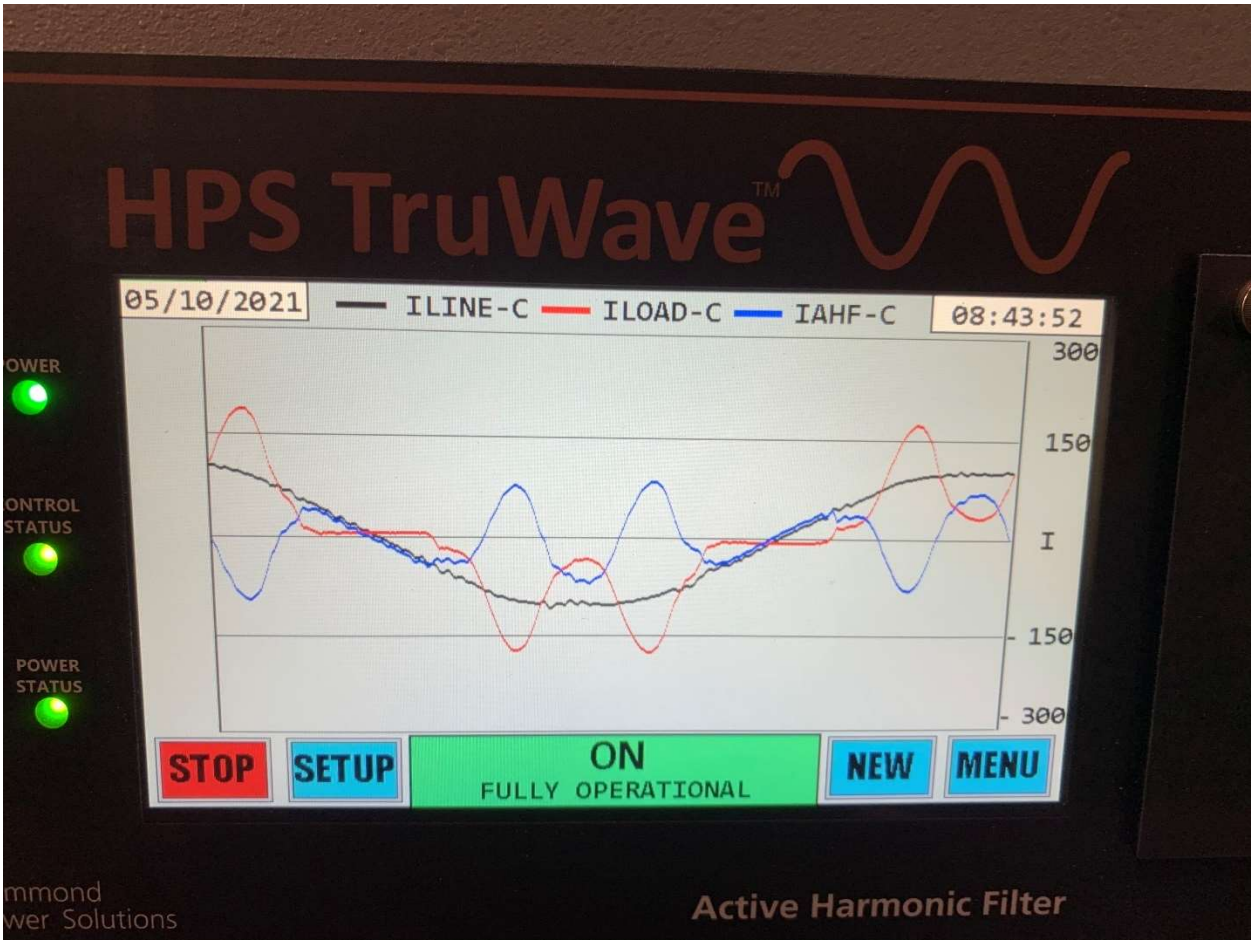

Display Readings

The following reading were recorded from the harmonic filter.

	Line			Load		
TOTAL AMPS	71.7	75.8	74.0	83.4	88.0	86.4
HARMONIC AMPS	2.5	2.5	2.5	44.0	44.0	45.2
HARM THDR	3.50%	3.30%	3.30%	52.80%	50.00%	52.30%
KW/KVA/PF	62.9	63.6	0.989	62.1	73.9	0.84

AHF AMPS	42.1	42.3	43.5
INV AMPS	43.3	43.3	44.7
LINE VOLTS	496.8	497.9	495.57
AHF HF/DC	1.1	1.3	
%CT LOAD	10%		

% LOADED	42%	42%	44%
LINE FREQ	59.98		
VOLT THDR	1%	0.8	0.8
NUETRAL AMPS	2.2		
DC VOLTS(LO+HI)	821.0	411.3	409.7

Unit Parameters

The following are the parameters set on the harmonic filter.

CUSTOMER PARAMETERS	
CT CURRENT RATIO:	800
CT PLACEMENT:	Line
NUMBER OF CTS:	3
% LOAD TO BE CORRECTED:	100
%THD GOAL TO BE ACHIEVED BY THIS UNIT:	3
POWER FACTOR GOAL TO BE ACHIEVED BY THIS UNIT:	0
CURRENT LIMIT % OF RATING:	100
CURRENT LIMIT (1 PHASE % OF TOTAL RATING):	105
UNIT DISABLED IF LOAD POWER BELOW THIS %:	0
THDR OR THDF DISPLAYED:	THDR
DISLPAY FILTERING (0-100 = MIN-MAX)	50
HARMONIC CALC FILTERING (0-100 = MIN-MAX):	20
UNIT WILL NOT START IF LOAD PF LESS THAN:	0.65
EXTERNAL ENABLE INPUT:	NOT USED

CONTROL PARAMETERS	
RESISTIVE GAIN (1000 = NOM):	1000
INDUCTIVE GAIN (1000 = NOM):	1000
VAN CROSSING ADJUSTMENT (25 NSEC/BIT):	0
ILINE CROSSING ADJUSTMENT (1 CYCLE SAMPLE/BIT):	-1
ILINE ERR CLIP (% RATED AMPS):	100
ILINE PROP GAIN (1000 = NOM):	1000
ISC FILT GAIN LEVEL (0-1000 = 0-1.000):	995
ISC CLIP LEVEL (1000 = NOM):	1200
ISC GAIN (1000 = NOM):	1000
ISC ADVANCE (1 CYCLE SAMPLE/BIT):	8
IO ADVANCE (1 CYCLE SAMPLE/BIT):	5
DIO FILT GAIN (0-1000 = 0-1.000):	700
IDMAX PROP GAIN (1000 = NOM)	1000
IDMAX INT GAIN (1000 = NOM)	1000
ID OFFSET SCALE (1000 = GAIN OF 1):	1100
ID OFFSET CLIP (1000=100%)	300
CT ADJUSTMENT:	0
DIAGNOSTIC SUPPRESSION:	0

Unit Parameters (continued)

SYSTEM PARAMETERS	
NOMINAL FAN#1 CURRENT (MA):	800
NOMINAL FAN#2 CURRENT (MA):	800
NOMINAL FAN#3 CURRENT (MA):	800
NOMINAL FAN#4 CURRENT (MA):	0
NOMINAL FAN#5 CURRENT (MA):	0
NOMINAL FAN#6 CURRENT (MA):	0
DSP OVER-TEMPERATURE (DEGREES C):	43
DSP OVER-TEMPERATURE (DEGREES C):	55
DSP OVER-TEMPERATURE (DEGREES C):	72
IDMAX LIMIT 1 (% RATED AMPS):	200
IDMAX LIMIT 2 (% RATED AMPS):	230
% OF LOAD DISTORTION TO BE CORRECTED:	97

CONFIG PARAMETERS	
HMI SOFTWARE VERSION:	001.015
DSP SOFTWARE VERSION:	001.018
GDR SOFTWARE VERSION	02.00
NOMINAL FAN#4 CURRENT (MA):	11048
NOMINAL FAN#5 CURRENT (MA):	11178
NOMINAL FAN#6 CURRENT (MA):	480
DSP OVER-TEMPERATURE (DEGREES C):	100

Photographs

Harmonic Filter



Harmonic Filter Label Plate



Photographs (Continued)

CT Placement Inside Switchgear

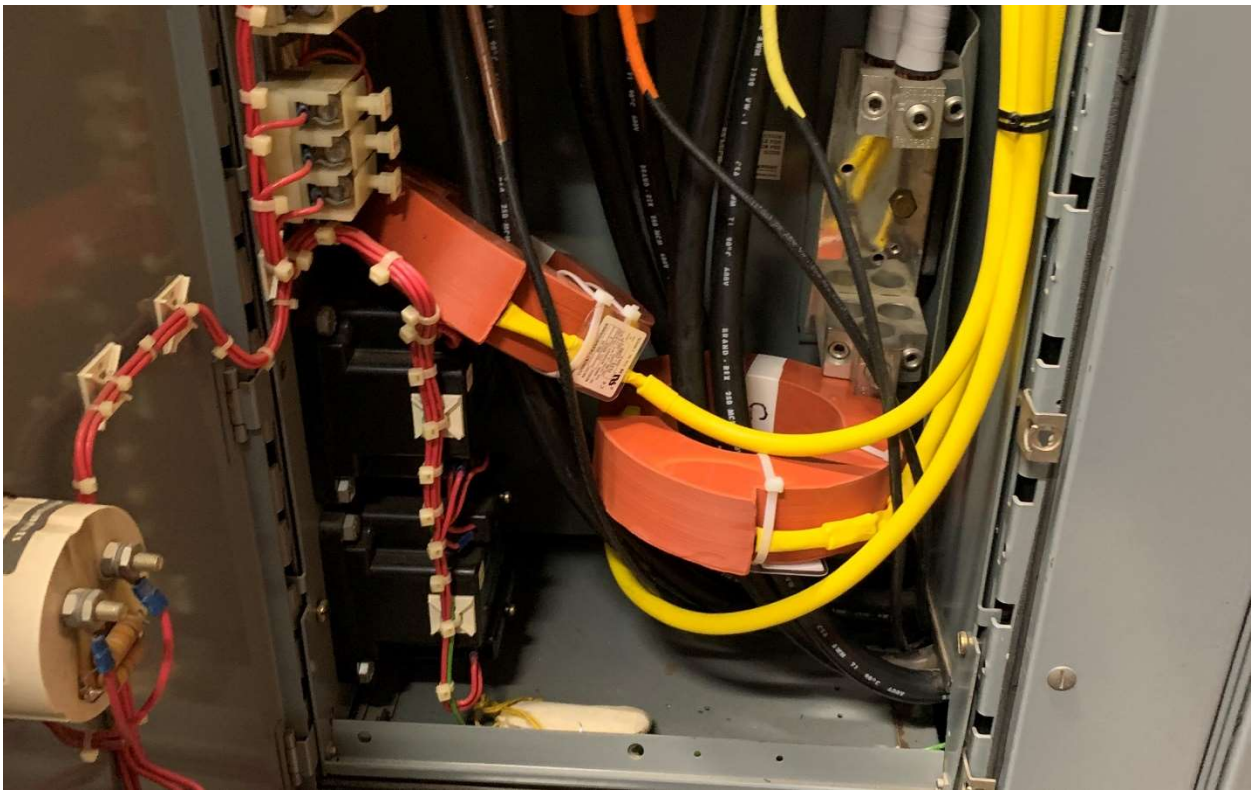

CT Terminal Board Inside Switchgear (Prior to Removing Shorting Screws)

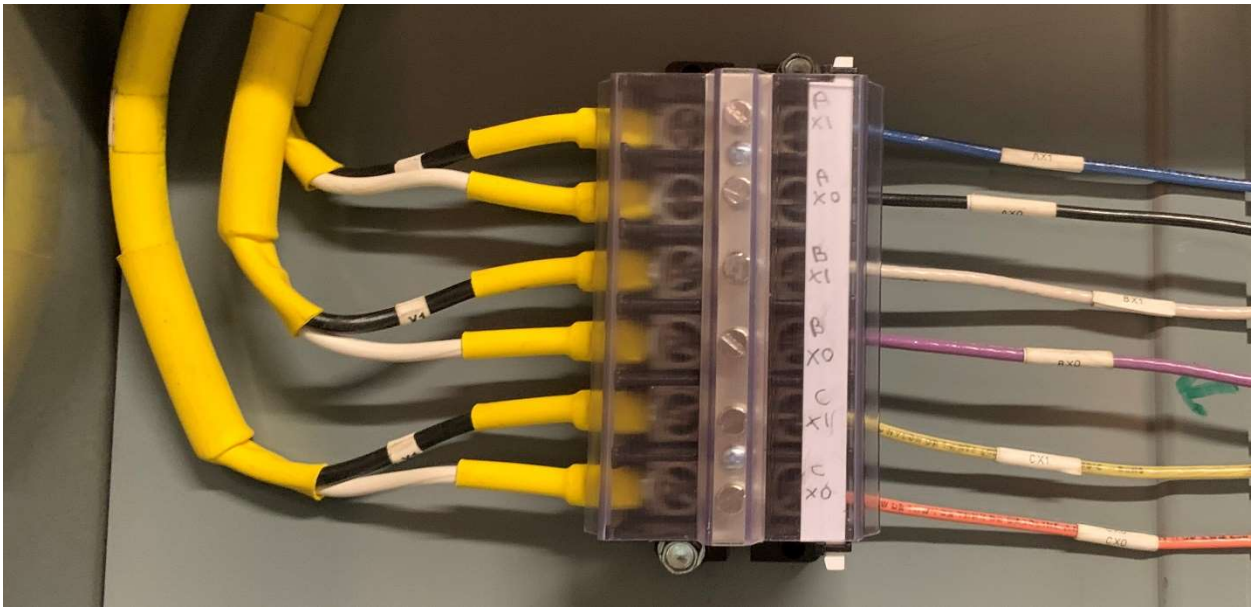

Equipment Utilized

A Flir T400 Infrared Camera was utilized to perform infrared thermal scans on harmonic filter. The specifications for the camera are:

Thermal sensitivity (NETD) 0.05°C @ +30° (+86°F) / 50mK
Detector type Focal Plane Array (FPA), uncooled microbolometer
IR resolution 320 x 240
Spectral range 7.5 to 13 µm
Digital zoom and pan/focus 1-8X continuous/auto & manual focus
IFOV (with 25° lens) 1.36 mRad

APPENDIX J

OPERATION AND MAINTENANCE MANUALS

OPERATION & MAINTENANCE MANUAL

FOR
LOCKHEED MARTIN CORPORATION
FORMER UNISYS FACILITY
LAKE SUCCESS, N.Y.

EXTRACTION/RECOVERY WELL VFD UPGRADES – SPRING 2021

ENGINEER

AMEC E&E, PC
511 CONGRESS ST. SUITE 200
PORTLAND, ME 04101

CONTRACTOR

HINCK ELECTRICAL CONTRACTOR, INC
75 ORVILLE DRIVE #1
BOHEMIA, N.Y. 11716

SUBMITTED BY

EAGLE CONTROL CORPORATION
23 OLD DOCK ROAD
YAPHANK, N.Y. 11980

JOB No. 1026

DATE

MAY 2021

EAGLE CONTROL CORP.

TABLE of CONTENTS

WELL RW-1RS
WELL RW-1RD
WELL EW-1R
WELL RW-3
WELL RW-100
WELL RW-100 SP-1
MODIFICATIONS TO OU1 MCP-100

ENCLOSURES and ACCESSORIES ……1
PILOT DEVICES ……....2
RELAYS and TIMING RELAYS ……..3
CIRCUIT BREAKERS and DISCONNECTS ……..4
REMOTE I/O ……...…5
OPERATOR INTERFACE ……6
COMMUNICATION EQUIPMENT ……7
MOTOR CONTROL and PROTECTION ……8
CONTACTORS and ACCESSORIES ……...9
SURGE SUPPRESSOR ……..10
ELECTRICAL DEVICES ……..11
VARIABLE FREQUENCY DRIVE ……..……...12
TERMINAL BLOCKS ……..…..13
CONTROL PANEL DRAWINGS……....……..…..14

SEE ABOVE LISTED SECTION COVER SHEETS
FOR SPECIFICATION SECTION IDENTIFICATION

(1)

ENCLOSURES and ACCESSORIES

Specification Section 13430-2.2

SAGINAW

ENCLOSURES and SUB-PANELS

SCE-36EL3012SS6LP / SCE36P30
SCE-60EL6018SS6LPPL / SCE-60P60SS6

ACCESSORIES

DEAD FRONT PANEL

SCE-DF36EL30LP
SCE-DF60EL60

HEATER WITH THERMOSTAT

SCE-HF2001A
SCE-HF4001B

EXHAUST GRILL

SCE-N12FGA1010
SCE-N12FGA44

RAIN HOOD

SCE-RH10N12SS
SCE-RH4N12SS

FAN

SCE-N12FA1010
SCE-N12FA44

THERMOSTAT ……. SCE-TEMNO

CABINET LIGHT ……. SCE-LF18NO

DRIP SHIELD ……. SCE-DS30SS6

DOOR SWITCH ……. SCE-LSA

BREATHER VENT ……. SCE-BVK

SUN SHIELD ……. SCE-DS30SS6

MOUNTING FEET ……. SCE-ELMFK4SS6

Saginaw Control and Engineering
95 Midland Road Saginaw, MI 48638-5770
(800) 234-6871 - Fax: (989) 799-4524
SCE@SaginawControl.com

SCE-36EL3012SSLP



Product Specifications:

Part Number: SCE-36EL3012SSLP
Description: S.S. EL Enclosure
Height: 36.00"
Width: 30.00"
Depth: 12.00"
Price Code: S5
List Price: $1,703.48
Catalog Page: 274
Est. Ship Weight: 94.00 lbs

RW-1RS, RW-1RD, EW-1R

Construction
- 0.075 In. stainless steel Type 304.
- Seams continuously welded and ground smooth.
- Flange trough collar around all sides of door opening.
- Pour in place oil & water resistant gasket
- Collar studs 3/8-16 provided for mounting optional panels.
- Stainless steel concealed hinges.
- Removable and interchangeable doors.
- Black quarter turn latches.
- Latches are opened or closed with a screwdriver (optional tamper-resistant inserts are available).
- Mounting holes in back of enclosure.
- Mounting hardware, sealing washer and hole plug included.
- Removable print pocket furnished if height and width of enclosure is greater than 12 inches.
- Ground studs on door and body.

Application
Designed to house electrical and electronic controls, instruments and components in areas which may be regularly hosed down or are in very wet conditions. Provides protection from dust, dirt, oil, and water. For outdoor applicationS a drip shield is recommended.

Options
Optional mounting feet available. Door hardware available.

Finish
#4 brushed finish on all exterior surfaces. Optional sub-panels are powder coated white.

Industry Standards - (IS6)
- NEMA Type 3R, 4, 4X, 12 and Type 13
- UL Listed Type 3R, 4, 4X and 12
- CSA Type 4, 4X and 12
- IEC 60529
- IP 66

Notes
Special Instructions apply for IS3, IS4 and IS6 to maintain the environmental rating of Type 3R for these parts. Instructions are located on the enclosure door. Drip shield is required on IS3, drip shield is recommended on IS4 and IS6. Drain holes are required on all.

Optional Accessories
- SCE-36P30 Subpanel, Bent
- SCE-36P30GALV Subpanel, Bent Galvanized
- SCE-BVK Breather Vent
- SCE-DF36EL30LP Panel, Dead Front (Wall Mount)
- SCE-DS30SS Shield, S.S. Drip
- SCE-ELFM30WSS S.S. EL Flush Mount Frame
- SCE-ELFM36HSS S.S. EL Flush Mount Frame
- SCE-ELMFK4 Foot Kit, EL Mounting (4pc.)
- SCE-ELSP3 KIT, Swing-Out Panel (20 High & Up)
- SCE-RD36EL30SS Door, Replacement

Similar Part Numbers
- SCE-24EL2006SSLPS.S. EL Enclosure
- SCE-24EL2008SSLPS.S. EL Enclosure
- SCE-24EL2010SSLPS.S. EL Enclosure
- SCE-24EL2012SSLPS.S. EL Enclosure
- SCE-24EL2408SSLPS.S. EL Enclosure
- SCE-24EL2410SSLPS.S. EL Enclosure
- SCE-24EL2412SSLPS.S. EL Enclosure
- SCE-24EL2416SSLPS.S. EL Enclosure
- SCE-24EL3008SSLPS.S. EL Enclosure
- SCE-24EL3010SSLPS.S. EL Enclosure

Installation Information
- Mounting Foot Kit for Enviroline Enclosures
- EL Flush Mount Frame
- Drip Shield Kit Assembly
- Sealing Washer Specifications
- Dead Front Wall Mount Installation Instructions
- Swing Panel Assembly for Enviroline Enclosures
- Dead Front Wall Mount < 20 In Height Installation Instructions
- Swing Panel ELSP3 for Encl. Height > 16
- Swing Panel ELSP for Encl. Height <= 16
- Enviroline Series Single Door Enclosure

Saginaw Control and Engineering
95 Midland Road Saginaw, MI 48638-5770
(800) 234-6871 - Fax: (989) 799-4524
SCE@SaginawControl.com

SCE-36EL3012SSLPPL



Product Specifications:

Part Number: SCE-36EL3012SSLPPL
Description: S.S. LPPL Enclosure
Height: 36.00"
Width: 30.00"
Depth: 12.00"
Price Code: S9
List Price: $1,829.72
Catalog Page: 272
Est. Ship Weight: 94.00 lbs

RW-100 RCP

Construction
- 0.075 In. stainless steel Type 304.
- Seams continuously welded and ground smooth.
- Flange trough collar around all sides of door opening.
- Collar studs 3/8-16 provided for mounting optional panels.
- Mounting holes in back of the enclosure for wall mounting.
- Mounting hardware, sealing washers and hole plugs included.
- Stainless steel concealed hinges.
- Removable and interchangeable doors.
- Black zinc die cast keylocking/padlocking handles.
- 3-point latching mechanism.
- Removable print pocket.
- Pour in place oil & water resistant gasket
- Ground stud on door and body.

Application
Designed to house electrical and electronic controls, instrumentation and components in indoor or outdoor locations. For outdoor applications a drip shield is recommended.

Finish
#4 Brushed finish on all exterior surfaces. Optional sub-panels are powder coated white.

Industry Standards - (IS6)
- NEMA Type 3R, 4, 4X, 12 and Type 13
- UL Listed Type 3R, 4, 4X and 12
- CSA Type 4, 4X and 12
- IEC 60529
- IP 66

Notes
Special Instructions apply for IS3, IS4 and IS6 to maintain the environmental rating of Type 3R for these parts. Instructions are located on the enclosure door. Drip shield is required on IS3, drip shield is recommended on IS4 and IS6. Drain holes are required on all.

Optional Accessories
SCE-36P30 Subpanel, Bent
SCE-36P30GALV Subpanel, Bent Galvanized
SCE-BVK Breather Vent
SCE-DF36EL30LP Panel, Dead Front (Wall Mount)
SCE-DS30SS Shield, S.S. Drip
SCE-ELFM30WSS S.S. EL Flush Mount Frame
SCE-ELFM36HSS S.S. EL Flush Mount Frame
SCE-ELMFK4 Foot Kit, EL Mounting (4pc.)
SCE-ELSP3 KIT, Swing-Out Panel (20 High & Up)

Similar Part Numbers
SCE-24EL2010SSLPPLS.S. LPPL Enclosure
SCE-24EL2410SSLPPLS.S. LPPL Enclosure
SCE-30EL2412SSLPPLS.S. LPPL Enclosure
SCE-30EL3012SSLPPLS.S. LPPL Enclosure
SCE-36EL2412SSLPPLS.S. LPPL Enclosure
SCE-36EL3612SSLPPLS.S. LPPL Enclosure
SCE-42EL3612SSLPPLS.S. LPPL Enclosure
SCE-48EL3612SSLPPLS.S. LPPL Enclosure
SCE-48EL3616SSLPPLS.S. LPPL Enclosure

Installation Information
- Sealing Washer Specifications
- Dead Front Wall Mount With 3 Point Latching Hardware
- EL Flush Mount Frame
- Dead Front Wall Mount Installation Instructions
- Swing Panel ELSP3 for Encl. Height > 16
- Drip Shield Kit Assembly
- Service Parts Wall Mount Disconnect Enclosures

Saginaw Control and Engineering
95 Midland Road Saginaw, MI 48638-5770
(800) 234-6871 - Fax: (989) 799-4524
SCE@SaginawControl.com

SCE-36P30



Product Specifications:

Part Number: SCE-36P30
Description: Subpanel, Bent
Height: 33.00"
Width: 27.00"
Depth: 0.88"
Price Code: P3
List Price: $101.27
Catalog Page: 418
Est. Ship Weight: 34.00 lbs

Construction
- Subpanel, Bent - 0.125 In. Carbon Steel.
- Subpanel, Flat - 0.075 In. Carbon Steel.

Finish
Powder Coated White.

Industry Standards - (IS17)
- NEMA Not Applicable
- UL Not Applicable
- CSA N/A

Similar Part Numbers
SCE-24P20Subpanel, Bent
SCE-24P24Subpanel, Bent
SCE-24P24PCSubpanel, Flat
SCE-30P20Subpanel, Bent
SCE-30P24Subpanel, Bent
SCE-30P30Subpanel, Bent
SCE-36P24Subpanel, Bent
SCE-36P36Subpanel, Bent
SCE-40P24Subpanel, Bent
SCE-42P24Subpanel, Bent

Installation Information
- Sub-Plate Layout & Grounding for 3/8-16

Saginaw Control and Engineering
95 Midland Road Saginaw, MI 48638-5770
(800) 234-6871 - Fax: (989) 799-4524
SCE@SaginawControl.com

SCE-60EL6018SSLPPL



Product Specifications:

Part Number: SCE-60EL6018SSLPPL
Description: S.S. 2DR EL LPPL Enclosure
Height: 60.00"
Width: 60.00"
Depth: 18.00"
Price Code: S4
List Price: $8,176.75
Catalog Page: 296
Est. Ship Weight: 590.00 lbs

RW-100 SP-1 VFD PANEL

Construction
- 0.104 In. stainless Steel Type 304
- Seams continuously welded and ground smooth.
- Flange trough collar around all sides of door opening.
- Removable centerpost.
- Heavy duty lifting eyes anchored into reinforced top.
- Body stiffeners.
- Stainless Steel concealed hinges.
- Black keylocking/padlocking handles.
- 3-point latching mechanism.
- Removable print pocket.
- 12 In. removable floor stands.
- Panel supports.
- Provision for mechanical interlock.
- Pour in place oil & water resistant gasket
- Ground stud on door and body.
- Provisions for light kit.
- Collar studs 3/8-16 provided for mounting optional panels.

Application
Designed to house electrical and electronic controls, instrumentation and components in indoor & outdoor locations. For outdoor applications a drip shield is recommended.

Options
Provisions for mechanical interlock. See Accessory section to order.

Finish
#4 brushed finish on all exterior surfaces. Optional sub-panels are powder coated white.

Industry Standards - (IS6)
- NEMA Type 3R, 4, 4X, 12 and Type 13
- UL Listed Type 3R, 4, 4X and 12
- CSA Type 4, 4X and 12
- IEC 60529
- IP 66

Notes
Special Instructions apply for IS3, IS4 and IS6 to maintain the environmental rating of Type 3R for these parts. Instructions are located on the enclosure door. Drip shield is required on IS3, drip shield is recommended on IS4 and IS6. Drain holes are required on all.

Optional Accessories
SCE-104941 Interlock, Mechanical for Left Door as Main
SCE-105604 Interlock, Mechanical for Right Door as Main
SCE-13ELJEXPP Pocket, Exterior Print
SCE-19ELJEXPP Pocket, Exterior Print
SCE-60P60 Subpanel, Bent
SCE-60P60GALV Subpanel, Bent Galvanized
SCE-BP5618 Plate, Barrier
SCE-BPEX18 Barrier Extension
SCE-BVK Breather Vent
SCE-DF60EL60 Panel, Dead Front (Enviroline Floor Mount)
SCE-DS60SS Shield, S.S. Drip
SCE-FS1212SS Shelf, S.S. Folding
SCE-FS1818SS Shelf, S.S. Folding
SCE-FS2424SS Shelf, S.S. Folding
SCE-LF18 Fixture, LED Light
SCE-LF18NO Fixture, LED Light w/o Outlet
SCE-RDL60EL60SS Door, Replacement
SCE-RDR60EL60SS Door, Replacement

Similar Part Numbers
SCE-60EL4812SSLPPLS.S. 2DR EL LPPL Enclosure
SCE-60EL4818SSLPPLS.S. 2DR EL LPPL Enclosure
SCE-60EL6012SSLPPLS.S. 2DR EL LPPL Enclosure
SCE-72EL6012SSLPPLS.S. 2DR EL LPPL Enclosure
SCE-72EL6018SSLPPLS.S. 2DR EL LPPL Enclosure
SCE-72EL7212SSLPPLS.S. 2DR EL LPPL Enclosure
SCE-72EL7218SSLPPLS.S. 2DR EL LPPL Enclosure
SCE-72EL7224SSLPPLS.S. 2DR EL LPPL Enclosure

Installation Information
- Mechanical Interlock
- Dead Front 2 Door W/Center Post Installation Instructions
- LED Light Fixture
- Folding Shelf Hole Pattern
- Drip Shield Kit Assembly
- Service Parts Free Standing & Floor Mount Enclosures

Saginaw Control and Engineering
95 Midland Road Saginaw, MI 48638-5770
(800) 234-6871 - Fax: (989) 799-4524
SCE@SaginawControl.com

SCE-60P60



Product Specifications:

Part Number: SCE-60P60
Description: Subpanel, Bent
Height: 56.00"
Width: 56.00"
Depth: 0.88"
Price Code: P3
List Price: $331.68
Catalog Page: 418
Est. Ship Weight: 123.00 lbs

Construction
- Subpanel, Bent - 0.125 In. Carbon Steel.
- Subpanel, Flat - 0.075 In. Carbon Steel.

Finish
Powder Coated White.

Industry Standards - (IS17)
- NEMA Not Applicable
- UL Not Applicable
- CSA N/A

Similar Part Numbers
SCE-48P48Subpanel, Bent
SCE-60P48Subpanel, Bent
SCE-64P52Subpanel, Bent
SCE-64P64Subpanel, Bent
SCE-72P48Subpanel, Bent
SCE-72P60Subpanel, Bent
SCE-72P72Subpanel, Bent

Installation Information
- Sub-Plate Layout & Grounding for 3/8-16

Saginaw Control and Engineering
95 Midland Road Saginaw, MI 48638-5770
(800) 234-6871 - Fax: (989) 799-4524
SCE@SaginawControl.com

SCE-BVK





Product Specifications:

Part Number: SCE-BVK
Description: Breather Vent
Height: 2.75"
Width: 2.00"
Depth: 1.50"
Price Code: P2
List Price: $20.75
Catalog Page: 375
Est. Ship Weight: 0.20 lbs

RW-1RS, RW-1RD, EW-1R PANELS ONLY

Application
Designed for indoor or outdoor applications to handle the large negative pressure differential caused in a tightly sealed enclosure in extreme weather conditions or wash down applications that draw water into the enclosure. Adding a Breather Vent will equalize this pressure differential. Installed on the side of your enclosure as a breather or installed on the bottom as a drain and vent. Breather vents are made of corrosion and UV resistant Polycarbonate material.

Industry Standards - (IS24)
- UL Component Recognized

Notes
UL Recognized Type 1, 2, 3, 3R, 3RX, 3S, 4, 4X & 12
UL File # E69392
IEC 60529 IP 56

Installation Information
- SCE-BVK, Breather Vent Kit

Saginaw Control and Engineering
95 Midland Road Saginaw, MI 48638-5770
(800) 234-6871 - Fax: (989) 799-4524
SCE@SaginawControl.com

SCE-DF60EL60



Product Specifications:

Part Number: SCE-DF60EL60
Description: Panel, Dead Front (Enviroline Floor Mount)
Height: 56.00"
Width: 25.88"
Depth: 1.83"
Price Code: P2
List Price: $385.11
Catalog Page: 429
Est. Ship Weight: 62.31 lbs

RW-100 RCP & RW-100 SP-1 VFD PANEL

Construction
- 0.075 In. carbon steel.

Application
Designed for installation into Enviroline Series Two-Door Floor-Mounted enclosures with center channel, to be installed in the front of an enclosure and to swing out of the enclosure. Kit consists of heavy gauge brackets, hinges, and mounting hardware. Installed by detaching door hinge from enclosure and installing swing out panel kit to the existing holes. Hinge is supplied with the enclosure. Made from steel. Kit contains one panel and all hardware for one dead front behind one door.

Finish
Powder Coated white inside and out.

Industry Standards - (IS17)
- NEMA Not Applicable
- UL Not Applicable
- CSA N/A

Similar Part Numbers
SCE-DF48EL48Panel, Dead Front (Enviroline Floor Mount)
SCE-DF60EL48Panel, Dead Front (Enviroline Floor Mount)
SCE-DF72EL60Panel, Dead Front (Enviroline Floor Mount)
SCE-DF72EL72Panel, Dead Front (Enviroline Floor Mount)

Installation Information
- Dead Front 2 Door W/Center Post Installation Instructions
- Dead Front 2 Door W/Disconnect Installation Instructions

Saginaw Control and Engineering
95 Midland Road Saginaw, MI 48638-5770
(800) 234-6871 - Fax: (989) 799-4524
SCE@SaginawControl.com

SCE-DS30SS6

Product Specifications:



Part Number: SCE-DS30SS6
Description: Shield, S.S. Drip
Height: 1.06"
Width: 30.00"
Depth: 3.00"
Price Code: P2
List Price: $140.06
Catalog Page: 390
Est. Ship Weight: 3.56 lbs

RW-100 RCP, RW-100 SP-1

Application
Protects door against dripping water and settling dust. Furnished with stainless steel screws and sealing washers. #4 Brushed Finnish

Industry Standards - (IS17)
- NEMA Not Applicable
- UL Not Applicable
- CSA N/A

Similar Part Numbers
SCE-DS20SSShield, S.S. Drip
SCE-DS20SS6Shield, S.S. Drip
SCE-DS24SSShield, S.S. Drip
SCE-DS24SS6Shield, S.S. Drip
SCE-DS30SSShield, S.S. Drip
SCE-DS36SSShield, S.S. Drip
SCE-DS36SS6Shield, S.S. Drip
SCE-DS42SSShield, S.S. Drip
SCE-DS42SS6Shield, S.S. Drip

Installation Information
- Drip Shield Kit Assembly

Saginaw Control and Engineering
95 Midland Road Saginaw, MI 48638-5770
(800) 234-6871 - Fax: (989) 799-4524
SCE@SaginawControl.com

SCE-ELMFK4SS6-OS



Product Specifications:

Part Number: SCE-ELMFK4SS6-OS
Description: Foot Kit, S.S. EL Mounting (4pc.)
Height: 3.00"
Width: 1.50"
Depth: 2.00"
Price Code: P2
List Price: $53.50
Catalog Page: 413
Est. Ship Weight: 0.70 lbs

RW-100, RW-1RS, RW-1RD, EW-1R RCP's

Application
SCE-ELMFK4SS6-OS Made for use with all SCE Enviroline enclosures and two-door wall-mount enclosures. Made from heavy gauge staineless steel type 316 with 3/18-16 stainless steel stud to maintain type 3, 3R, 4, 4X and 12 rating of your enclosure. Available in kits of four.
SCE-HLPMFK Made for use on HLP and SA LPPL EnEnclosure. Zinc Die Cast and Zinc Plated.

Industry Standards - (IS17)
- NEMA Not Applicable
- UL Not Applicable
- CSA N/A

Similar Part Numbers
SCE-HLPMFKMounting Foot Kit for HLP and SA LPPL Enc.

Saginaw Control and Engineering
95 Midland Road Saginaw, MI 48638-5770
(800) 234-6871 - Fax: (989) 799-4524
SCE@SaginawControl.com

SCE-HF2001A



Product Specifications:

Part Number: SCE-HF2001A
Description: Heater W/ Thermostat
Height: 5.41"
Width: 4.38"
Depth: 4.56"
Price Code: P1
List Price: $432.67
Catalog Page: 380
Est. Ship Weight: 4.00 lbs

RW-100 RCP

Construction
- Brushed Aluminum housing.
- Thermostat Range 0° to 100°F (-18° to 38°C).
- Heat discharge at the top of the heater.
- Panel mount.
- Air volume of 16 CFM on 125 & 200 Watt Heaters, 26 CFM on 400 & 800 Watt Heaters.
- Heat Indicator Light.
- Switch for Auto tuning on and off with the heating thermostat or set to - Fan - to run continuous & independent of the heating thermostat.
- Temperature differential hysteresis 5.4°F
- UL Recognized Component.

Application
Designed to protect electrical controls, instruments and sensitive components from low temperatures and the effects of condensation and corrosion by maintaining a stable temperature within the electrical enclosure. These heaters are not intended for use in hazardous, wet, dusty or dirty locations.

Finish
Brushed Aluminum

Industry Standards - (IS24)
- UL Component Recognized

Notes
UL File #E358386

Similar Part Numbers
SCE-HF1251AHeater W/Thermostat
SCE-HF1252AHeater W/ Thermostat (230 Volt)
SCE-HF2002AHeater W/ Thermostat (230 Volt)
SCE-HF4001BHeater W/ Thermostat
SCE-HF4002BHeater W/ Thermostat (230 Volt)
SCE-HF8001BHeater W/ Thermostat
SCE-HF8002BHeater W/ Thermostat (230 Volt)

Installation Information
- Fan/Heater with Thermostat

SP1- VFD Panel Only

Saginaw Control and Engineering
95 Midland Road Saginaw, MI 48638-5770
(800) 234-6871 - Fax: (989) 799-4524
SCE@SaginawControl.com

SCE-LF18NO

Product Specifications:

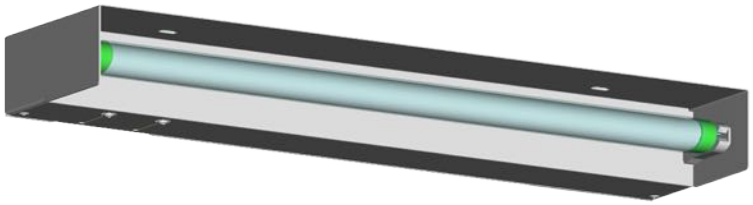

Part Number: SCE-LF18NO
Description: Fixture, LED Light w/o Outlet
Height: 2.75"
Width: 18.18"
Depth: 4.00"
Price Code: P2
List Price: $185.90
Catalog Page: 392
Est. Ship Weight: 6.00 lbs
Operating Temperature: -4 to 140 Degrees F

Construction
- 4000K Frosted White
- 18 inch 850 Lumens
- 24 inch 900 Lumens
- LF1824 24VDC 500 Lumens

Application
LED light fixture is designed to provide interior lighting for an enclosure. Can be mounted to light channels in the top of an enclosure or on the front flange of most enclosures. Door activated adjustable switch, switch can be removed and relocated. Terminal block on each end of fixture, making it easy to wire and daisy chain multiple lights continuously. LED bulb with PVC frosted white protective light diffuser included. Housing made from steel and powder coated white. Units with convenience receptacle outlet are 120 VAC with ground 50/60 HZ. Without convenience receptacle outlet 100 to 277 VAC 50/60 HZ. With the exception of SCE-LF1824VDC.

Industry Standards - (IS24)
- UL Component Recognized

Notes
UL File # E358386

Optional Accessories
SCE-LEDB18 Bulb, 18 Inch LED

Similar Part Numbers
SCE-LF18Fixture, LED Light
SCE-LF1824VDCFixture, LED Light 24VDC
SCE-LF24Fixture, LED Light
SCE-LF24NOFixture, LED Light w/o Outlet

Installation Information
- LED Light Fixture

Saginaw Control and Engineering
95 Midland Road Saginaw, MI 48638-5770
(800) 234-6871 - Fax: (989) 799-4524
SCE@SaginawControl.com

SCE-LSA



Product Specifications:

Part Number: SCE-LSA
Description: Assembly, Light Switch
Height: 2.00"
Width: 2.68"
Depth: 1.00"
Price Code: P2
List Price: $38.34
Catalog Page: 392
Est. Ship Weight: 1.00 lbs

Application
Complete Light Switch Assembly. Designed to remote mount the light switch when space is limited. And easily mounted to Single door enclosures with SCE concealed hinges.

Industry Standards - (IS24)
- UL Component Recognized

Notes
Lamb E-Switch PP1
UL File # E194579
Honywell Micro Switch 1DM1
UL File # E313809

Installation Information
- Light Switch Mounting Bracket (Video)

PANEL INTRUSION DETECTION
RW-100; RW-100 SP-1

Saginaw Control and Engineering
95 Midland Road Saginaw, MI 48638-5770
(800) 234-6871 - Fax: (989) 799-4524
SCE@SaginawControl.com

SCE-N12FA44



Product Specifications:

Part Number: SCE-N12FA44
Description: Fan Assembly (115v)
Height: 5.91"
Width: 5.91"
Depth: 2.88"
Price Code: P1
List Price: $169.95
Catalog Page: 376
Est. Ship Weight: 2.00 lbs

RW-100 RCP

Application
Easy to install snap fit design for use in enclosures that require cooling but have limited space in NEMA 1 and 12 applications. Housing and grille are made of black heat resistant (ABS-FR), self-extinguishing material. Fans are available in 115 or 230 volt AC, 60/50 Hertz (HZ) single phase or 24 volt DC.

Industry Standards - (IS24)
- UL Component Recognized

Notes
Type 12 - IEC 60529 IP 54
UL File Component Recognized SA32278
UL Listed E498756

Optional Accessories
SCE-113947 Replacement Filter, 4in. Nema 3R & 12 (6 Pa...
SCE-N12FGA44 Filter & Grille Assy. (Black)
SCE-RH4N12 Hood, Rain
SCE-RH4N12SS Hood, S.S. Rain
SCE-RH4N4XSS Protection Hood. Hose-proof

Similar Part Numbers
SCE-N12FA1010Fan Assembly (115v)
SCE-N12FA1010-230Fan Assembly (230v)
SCE-N12FA10HFFan Assembly (550 CFM) 115V
SCE-N12FA10HF-230Fan Assembly (550 CFM) 230V
SCE-N12FA10HF-460Fan Assembly (550 CFM) 460V
SCE-N12FA33Fan Assembly. 120V AC, 13/15 CFM
SCE-N12FA33-230Fan Assembly. 230V AC, 13/15 CFM
SCE-N12FA33-24VDCFan Assembly. 24V DC, 20 CFM
SCE-N12FA44-230Fan Assembly (230v)
SCE-N12FA44-24VDCFan Assembly (24VDC)

Installation Information
- Type 12 Fan / Filter Package
- Thermal Management Chart

Saginaw Control and Engineering
95 Midland Road Saginaw, MI 48638-5770
(800) 234-6871 - Fax: (989) 799-4524
SCE@SaginawControl.com

SCE-N12FA1010



Product Specifications:

Part Number: SCE-N12FA1010
Description: Fan Assembly (115v)
Height: 12.80"
Width: 12.80"
Depth: 6.30"
Price Code: P1
List Price: $578.57
Catalog Page: 376
Est. Ship Weight: 6.00 lbs

RW-100 SP-1

Application
Easy to install snap fit design for use in enclosures that require cooling but have limited space in NEMA 1 and 12 applications. Housing and grille are made of black heat resistant (ABS-FR), self-extinguishing material. Fans are available in 115 or 230 volt AC, 60/50 Hertz (HZ) single phase or 24 volt DC.

Industry Standards - (IS24)
- UL Component Recognized

Notes
Type 12 - IEC 60529 IP 54
UL File Component Recognized SA32278
UL Listed E498756

Optional Accessories
SCE-108401 Replacement Filter, 10in. Nema 3R & 12 (6 P...
SCE-N12FGA1010 Filter & Grille Assy. (Black)
SCE-RH10N12 Hood, Rain
SCE-RH10N12SS Hood, S.S. Rain
SCE-RH10N4XSS Protection Hood. Hose-proof

Similar Part Numbers
SCE-N12FA1010-230Fan Assembly (230v)
SCE-N12FA10HFFan Assembly (550 CFM) 115V
SCE-N12FA10HF-230Fan Assembly (550 CFM) 230V
SCE-N12FA10HF-460Fan Assembly (550 CFM) 460V
SCE-N12FA33Fan Assembly. 120V AC, 13/15 CFM
SCE-N12FA33-230Fan Assembly. 230V AC, 13/15 CFM
SCE-N12FA33-24VDCFan Assembly. 24V DC, 20 CFM
SCE-N12FA44Fan Assembly (115v)
SCE-N12FA44-230Fan Assembly (230v)
SCE-N12FA44-24VDCFan Assembly (24VDC)

Installation Information
- Type 12 Fan / Filter Package
- Thermal Management Chart

Saginaw Control and Engineering
95 Midland Road Saginaw, MI 48638-5770
(800) 234-6871 - Fax: (989) 799-4524
SCE@SaginawControl.com

SCE-N12FGA44



Product Specifications:

Part Number: SCE-N12FGA44
Description: Filter & Grille Assy. (Black)
Height: 5.91"
Width: 5.91"
Depth: 1.15"
Price Code: P1
List Price: $53.57
Catalog Page: 377
Est. Ship Weight: 1.00 lbs

RW-100 RCP

Application
Easy to install snap fit design for use on air discharge side of fan package for NEMA 1 and 12 applications. Housing and grille are made of black heat resistant (ABS-FR), self-extinguishing material.

Industry Standards - (IS24)
- UL Component Recognized

Notes
Type 12 - IEC 60529 IP 54
UL File Component Recognized SA32278
UL Listed E498756

Optional Accessories
SCE-113947 Replacement Filter, 4in. Nema 3R & 12 (6 Pa...
SCE-N12FA44 Fan Assembly (115v)
SCE-N12FA44-230 Fan Assembly (230v)
SCE-N12FA44-24VDC Fan Assembly (24VDC)
SCE-RH4N12 Hood, Rain
SCE-RH4N12SS Hood, S.S. Rain

Similar Part Numbers
SCE-N12FGA1010Filter & Grille Assy. (Black)
SCE-N12FGA33Filter & Grille Assy. Type 12
SCE-N12FGA66Filter & Grille Assy. (Black)

Installation Information
- Type 12 Fan / Filter Package
- Thermal Management Chart

Saginaw Control and Engineering
95 Midland Road Saginaw, MI 48638-5770
(800) 234-6871 - Fax: (989) 799-4524
SCE@SaginawControl.com

SCE-N12FGA1010



Product Specifications:

Part Number: SCE-N12FGA1010
Description: Filter & Grille Assy. (Black)
Height: 12.80"
Width: 12.80"
Depth: 1.34"
Price Code: P1
List Price: $89.29
Catalog Page: 377
Est. Ship Weight: 3.00 lbs

RW-100 SP-1

Application
Easy to install snap fit design for use on air discharge side of fan package for NEMA 1 and 12 applications. Housing and grille are made of black heat resistant (ABS-FR), self-extinguishing material.

Industry Standards - (IS24)
- UL Component Recognized

Notes
Type 12 - IEC 60529 IP 54
UL File Component Recognized SA32278
UL Listed E498756

Optional Accessories
SCE-108401 Replacement Filter, 10in. Nema 3R & 12 (6 P...
SCE-N12FA1010 Fan Assembly (115v)
SCE-N12FA1010-230 Fan Assembly (230v)
SCE-RH10N12 Hood, Rain
SCE-RH10N12SS Hood, S.S. Rain
SCE-RH10N4XSS Protection Hood. Hose-proof

Similar Part Numbers
SCE-N12FGA33Filter & Grille Assy. Type 12
SCE-N12FGA44Filter & Grille Assy. (Black)
SCE-N12FGA66Filter & Grille Assy. (Black)

Installation Information
- Type 12 Fan / Filter Package
- Thermal Management Chart

Saginaw Control and Engineering
95 Midland Road Saginaw, MI 48638-5770
(800) 234-6871 - Fax: (989) 799-4524
SCE@SaginawControl.com

SCE-RH4N12SS

Product Specifications:

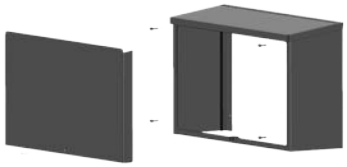

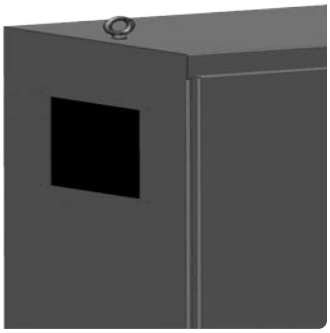

Part Number: SCE-RH4N12SS
Description: Hood, S.S. Rain
Height: 9.44"
Width: 7.81"
Depth: 4.50"
Price Code: P1
List Price: $107.33
Catalog Page: 378
Est. Ship Weight: 2.06 lbs

RW-100 RCP

Application
Designed for use with Type 12 fan and filter kits to prevent rain, sleet, snow, dropping water or fluids from being drawn into the enclosure. Removable cover for easy access to fan and filter kits. Made of heavy gauge galvannealed steel. "SS" parts are made of Type 304 stainless steel.

Finish
ANSI-61 gray powder coat.
"SS" parts with #4 brushed finish.
**-05 Powder Coated White.

Industry Standards - (IS11)
- UL Component Recognized Type 3R

Notes
UL File # E69392

Fan and Filter Kit are sold separately.

Optional Accessories
SCE-N12FA44 Fan Assembly (115v)
SCE-N12FA44-230 Fan Assembly (230v)
SCE-N12FA44-24VDC Fan Assembly (24VDC)
SCE-N12FA44LG Fan Assembly (115v) Type 12 RAL 7035
SCE-N12FGA44 Filter & Grille Assy. (Black)

Similar Part Numbers
SCE-RH10N12Hood, Rain
SCE-RH10N12-05Hood, Rain
SCE-RH10N12SSHood, S.S. Rain
SCE-RH4N12Hood, Rain
SCE-RH6N12Hood, Rain
SCE-RH6N12SSHood, S.S. Rain

Installation Information
- Rain Hood with Removable Cover

Saginaw Control and Engineering
95 Midland Road Saginaw, MI 48638-5770
(800) 234-6871 - Fax: (989) 799-4524
SCE@SaginawControl.com

SCE-RH10N12SS

Product Specifications:

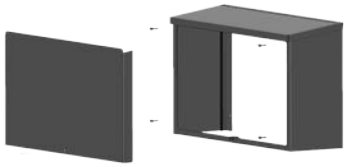

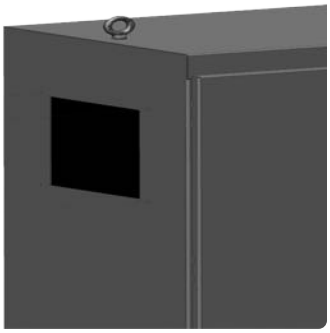

Part Number: SCE-RH10N12SS
Description: Hood, S.S. Rain
Height: 16.44"
Width: 14.81"
Depth: 4.50"
Price Code: P1
List Price: $128.81
Catalog Page: 378
Est. Ship Weight: 9.86 lbs

RW-100 SP-1

Application
Designed for use with Type 12 fan and filter kits to prevent rain, sleet, snow, dropping water or fluids from being drawn into the enclosure. Removable cover for easy access to fan and filter kits. Made of heavy gauge galvannealed steel. "SS" parts are made of Type 304 stainless steel.

Finish
ANSI-61 gray powder coat.
"SS" parts with #4 brushed finish.
**-05 Powder Coated White.

Industry Standards - (IS11)
- UL Component Recognized Type 3R

Notes
UL File # E69392

Fan and Filter Kit are sold separately.

Optional Accessories
SCE-N12FA1010 Fan Assembly (115v)
SCE-N12FA1010-230 Fan Assembly (230v)
SCE-N12FA1010LG Fan Assembly (115v) Type 12 RAL 7035
SCE-N12FGA1010 Filter & Grille Assy. (Black)
SCE-N12FGA1010LG Filter & Grille Assy. Type 12 RAL 7035

Similar Part Numbers
SCE-RH10N12Hood, Rain
SCE-RH10N12-05Hood, Rain
SCE-RH4N12Hood, Rain
SCE-RH4N12SSHood, S.S. Rain
SCE-RH6N12Hood, Rain
SCE-RH6N12SSHood, S.S. Rain

Installation Information
- Rain Hood with Removable Cover

Saginaw Control and Engineering
95 Midland Road Saginaw, MI 48638-5770
(800) 234-6871 - Fax: (989) 799-4524
SCE@SaginawControl.com

SCE-TEMNO

Product Specifications:



Part Number: SCE-TEMNO
Description: Thermostat (Normally Open)
Height: 2.40"
Width: 1.26"
Depth: 1.42"
Price Code: P1
List Price: $50.05
Catalog Page: 374
Est. Ship Weight: 1.00 lbs

FAN CONTROL; TEMPERATURE MONITORING FOR SP-1

Application
Designed to regulate air temperature in enclosures that operate with heaters or fans. This mechanical bi-metallic thermostat has a set point range of 30° to 140° F and is easily installed on 35mm mounting rail. (NC) contact normally closed, or (NO) contact normally open, switch capacity 10 amp 120-250 VAC Resistive load and 1 amp 120-250VAC Inductive load, 1.25 amp 24VDC.

Industry Standards - (IS24)
- UL Component Recognized

Notes
UL File # E358385

Similar Part Numbers
SCE-TEMNCThermostat (Normally Closed)

Installation Information
- Thermostat

(2)

PILOT DEVICES
(PUSHBUTTON, PILOT LIGHT, SELECTOR SWITCH)

Specification Section 13430-2.3

CUTLER-HAMMER

30mm LED PILOT LIGHT
WHITE …….E34TPB120LWG2A
GREEN ……. E34TPB120LGG2A
RED ……. E34TPB120LRG2A

30mm 3-POSITION SELECTOR SWITCH
E34VHBL1-2X

30mm PUSHBUTTON
E34PB1-53X

30mm EMERGENCY STOP PUSHBUTTON
E34GDB63LED120-1X

1

Illuminated Push-Pull Units

UL (NEMA) Type 3, 3R, 4, 4X, 12, 13

- Two-position maintained
- Illuminated

Illuminated Push-Pull Unit



Two-Position Illuminated Maintained Push, Maintained Pull

Operator Position ①

Maintained—Pull	Maintained—Intermediate	Lamp	Type	Voltage	Contact Type	Mounting Location A	Mounting Location B	LED/Lamp Number	Red Standard Push-Pull Catalog Number ②
0 X	X 0	LED	Full voltage	24 Vac/Vdc	1NO			Bayonet base	**E34GDB97LRD24-1X**
				120 Vac/Vdc	1NC				**E34GDB97LRD2A-1X**
			Transformer	24 Vac					**E34GDB89LRD06-1X**
				120 Vac					**E34GDB63LRD06-1X**
0 X	X 0	Incan-descent	Full voltage	24 Vac/Vdc	1NO			#757	**E34GDB79M2-1X**
			Resistor	120 Vac/Vdc	1NC			120MB	**E34GDB80M2-1X**
			Transformer	24 Vac				#755	**E34GDB89M2-1X**
				120 Vac					**E34GDB63M2-1X**

Standard



Lens and Color Selection

Color	Incandescent Suffix Code	LED Suffix Code	Catalog Number
Standard			
Red	**M2**	**RD**	**E34M2**
Red (EMER. STOP)	**M2N8**	**ED**	**E34M2N8**
Green	**M3**	**GD**	**E34M3**
Blue	**M6**	**LD**	**E34M6**
Amber	**M9**	**AD**	**E34M9**
White	**M5**	**WD**	**E34M5**
Clear	**M0**	**CD**	**E34M0**

Notes

Use NEMA 4X 10250T operators where exposed to ultraviolet light, see **Pages V7-T1-213** to **V7-T1-283**.

① X = closed circuit, 0 = open circuit.

② To order different type or color lens, substitute the underlined characters with appropriate suffix code from Lens and Color Selection table above. Example: E34GDB79**M3**-1X. For LEDs with different voltages see ordering example on **Page V7-T1-301**.

Pushbuttons

UL (NEMA) Type 3, 3R, 4, 4X, 12, 13

Momentary Pushbutton Operators, Non-Illuminated

	Button	Color	Catalog Number	
E34PB_ 	Flush button	Black	**E34PB1**	
		Red	**E34PB2**	
		Green	**E34PB3**	
		Yellow	**E34PB4**	
		White	**E34PB5**	
		Blue	**E34PB6**	
		Gray	**E34PB7**	
		Orange	**E34PB8**	
E34EB_ 	Extended button	Black	**E34EB1**	
		Red	**E34EB2**	
		Green	**E34EB3**	
		Yellow	**E34EB4**	
		White	**E34EB5**	
		Blue	**E34EB6**	
		Gray	**E34EB7**	
		Orange	**E34EB8**	
E34EHB_ 	Half shrouded button		**Vertical**	**Horizontal**
		Black	**E34EVB1**	**E34EHB1**
		Red	**E34EVB2**	**E34EHB2**
		Green	**E34EVB3**	**E34EHB3**
		Yellow	**E34EVB4**	**E34EHB4**
		White	**E34EVB5**	**E34EHB5**
		Blue	**E34EVB6**	**E34EHB6**
		Gray	**E34EVB7**	**E34EHB7**
		Orange	**E34EVB8**	**E34EHB8**
E34LB_ 	Mushroom button	Black	**E34LB1**	
		Red	**E34LB2**	
		Green	**E34LB3**	
		Yellow	**E34LB4**	
		Blue	**E34LB6**	
E34JB_ 	Anodized aluminum jumbo mushroom button ①	Black	**E34JB1**	
		Red	**E34JB2**	
		Red (Engraved EMERG. STOP)	**E34JB2N8**	
		Green	**E34JB3**	
		Yellow	**E34JB4**	

Notes

Use NEMA 4X 10250T operators where exposed to ultraviolet light, see **Pages V7-T1-213** to **V7-T1-283**.

① Anodized aluminum head—may not be suitable for some corrosive environments.

1

Selector Switch Units

UL (NEMA) Type 3, 3R, 4, 4X, 12, 13

- Two-, three- and four-position—maintained
- Non-illuminated and illuminated

Two-Position Maint. Switch Knob



Two-Position Selector Switch

Operator Position ①		Operator Action ②	Contact Type	Mounting Location A	Mounting Location B	Cam Code	Non-Illuminated Black Knob Catalog Number ③	Non-Illuminated Black Lever Catalog Number ③	Illuminated—120V Transformer Red Knob Catalog Number ③	Illuminated—120V Transformer Red Lever Catalog Number ③
X 0	0 X	M M	1NC 1NO			1	**E34VFBK1-1X**	**E34VFBL1-1X**	**E34VFB120ER-1X**	**E34VFB120FR-1X**

Three-Position Maint. Switch Knob



Three-Position Selector Switch

Operator Position ①			Operator Action ②	Contact Type	Mounting Location A	Mounting Location B	Cam Code	Non-Illuminated Black Knob Catalog Number ③	Non-Illuminated Black Lever Catalog Number ③	Illuminated—120V Transformer Red Knob Catalog Number ③	Illuminated—120V Transformer Red Lever Catalog Number ③
X 0	0 0	0 X	M M	1NO 1NO			3	**E34VHBK1-2X**	**E34VHBL1-2X**	**E34VHB120TER-2X**	**E34VHB120TFR-2X**
X 0 0	0 X 0	0 0 X		1NO 2NC (Series) 1NO			3	**E34VHBK1-23X**	**E34VHBL1-23X**	**E34VHB120TER-23X**	**E34VHB120TFR-23X**

Four-Position Maint. Switch Lever



Four-Position Selector Switch

Operator Position ①				Operator Action ②	Contact Type	Mounting Location A	Mounting Location B	Cam Code	Non-Illuminated Black Knob Catalog Number ③	Non-Illuminated Black Lever Catalog Number ③	Illuminated—120V Transformer Red Knob Catalog Number ③	Illuminated—120V Transformer Red Lever Catalog Number ③
X 0 0 0	0 X 0 0	0 0 X 0	0 0 0 X	M M M M	1NC 1NO 1NO 1NC			7	**E34VTBK1-23X**	**E34VTBL1-23X**	**E34VRB120TER-23X**	**E34VRB120TFR-23X**

Color Selection, Non-Illuminated

Color	Code Letter	Color	Code Letter
Black	**1**	White	**5**
Red	**2**	Blue	**6**
Green	**3**	Gray	**7**
Yellow	**4**	Orange	**8**

Notes

For Light Unit Voltage Suffix and Knobs, Levers tables, see **Page V7-T1-308**.

Use NEMA 4X 10250T operators where exposed to ultraviolet light, see **Pages V7-T1-213** to **V7-T1-283**.

① X = closed circuit, 0 = open circuit.

② M = Maintained.

③ To order different type or color selector switch, substitute the underlined character with appropriate suffix code from the Color Selection table. Example: E34VFBK**2**-X1.

1

Illuminated Pushbuttons and Indicating Lights

Illuminated Pushbutton



Indicating Light



PresTest



Operators without Lens

Type	Voltage	Lamp Number	Illuminated Pushbutton Catalog Number	Indicating Light Catalog Number	PresTest Catalog Number
LED Lamp (LEDs not included) ①					
Full voltage	—	Bayonet base	**E34CB497L**	**E34FB197L**	**E34FPB297L**
Transformer AC only	24		**E34XB024L**	—	—
	120		**E34XB120L**	**E34TB120L**	**E34TPB120L**
	240		**E34XB240L**	**E34TB240L**	**E34TPB240L**
	277		**E34XB277L**	**E34TB277L**	—
	380		**E34XB380L**	**E34TB380L**	**E34TPB380L**
	480		**E34XB480L**	**E34TB480L**	**E34TPB480L**
	600		**E34XB600L**	**E34TB600L**	**E34TPB600L**
Incandescent Lamp					
Full voltage AC/DC	6	#755	**E34CB06**	**E34FB06**	**E34FPB06**
	12	#756	**E34CB12**	**E34FB12**	**E34FPB12**
	24	#757	**E34CB24**	**E34FB24**	**E34FPB24**
	32	#1828	**E34CB32**	**E34FB32**	**E34FPB32**
	48	#1835	**E34CB48**	**E34FB48**	**E34FPB48**
Resistor AC/DC ②	120	120MB	**E34SB120**	**E34RB120**	**E34RPB120**
	240		**E34SB240**	**E34RB240**	**E34RPB240**
Transformer AC only	24	#755	**E34XB024**	—	—
	120		**E34XB120**	**E34TB120**	**E34TPB120**
	240		**E34XB240**	**E34TB240**	**E34TPB240**
	277		**E34XB277**	**E34TB277**	—
	380		**E34XB380**	**E34TB380**	**E34TPB380**
	480		**E34XB480**	**E34TB480**	**E34TPB480**
	600		**E34XB600**	**E34TB600**	**E34TPB600**
Neon AC/DC	120	NE51H-R-22	—	**E34NB120**	—
	240	NE51H-4-68	—	**E34NB240**	—

Notes

Use NEMA 4X 10250T operators where exposed to ultraviolet light, see **Pages V7-T1-213** to **V7-T1-283**.

① These units do not include lamps. Order LED separately to match lens color, see **Page V7-T1-269** for LED Selection and **Pages V7-T1-287** to **V7-T1-288** for Catalog Numbering Selection.

② Resistor units are not available for use with LEDs, choose either transformer or full voltage LED style.

Indicating Light Lens

Plastic



Glass



Color	Plastic Catalog Number	Glass ① Catalog Number
Red	**E34H2**	**E34G2**
Green	**E34H3**	**E34G3**
Yellow	**E34H4**	**E34G4**
White	**E34H5**	**E34G5**
Blue	**E34H6**	**E34G6**
Ambler	**E34H9**	**E34G9**
Clear	**E34H0**	**E34G0**

Illuminated Pushbutton Lens

E34V_



Color	Catalog Number
Red	**E34V2**
Green	**E34V3**
Yellow	**E34V4**
White	**E34V5**
Blue	**E34V6**
Ambler	**E34V9**
Clear	**E34V0**

PresTest Lens

Plastic



Glass



Color	Plastic Catalog Number	Glass ① Catalog Number
Red	**E34V2**	**E34P2**
Green	**E34V3**	**E34P3**
Yellow	**E34V4**	**E34P4**
White	**E34V5**	**E34P5**
Blue	**E34V6**	**E34P6**
Ambler	**E34V9**	**E34P9**
Clear	**E34V0**	**E34P0**

Note

① Glass lens has black anodized aluminum bezel.

(3)

RELAYS and TIMING RELAYS

Specification Section 13430-2.4

FINDER

2P RELAY and SOCKET
46.52.9.120.0074 / 97.02
60.12.8.120.0050 / 90.02

3P RELAY and SOCKET
60.13.8.120.0050 / 90.03
85.04.0.125.0000 / 94.74

4P TIMING RELAY and SOCKET
85.04.0.125.0000 / 94.74

Features

1 & 2 Pole relay range
46.52 - 2 Pole 8 A
46.61 - 1 Pole 16 A

- Socket mount or direct connection via Faston connectors
- AC coils & DC coils
- Available with: lockable test button, mechanical indicator & LED indicator
- 8 mm, 6 kV (1.2/50 µs) isolation, coil-contacts
- Cadmium Free contacts
- European Patent

46.52	46.61
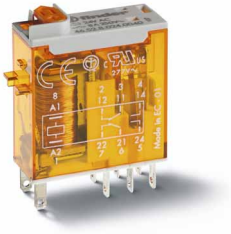	
• 2 Pole CO, 8 A • Plug-in/Solder terminals	• 1 Pole CO, 16 A • Plug-in/Faston 187
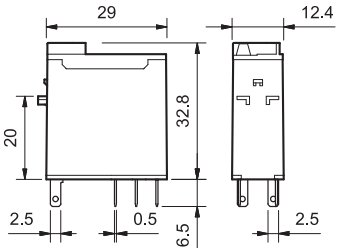 46.52	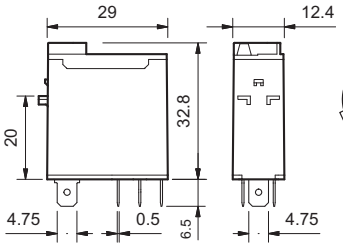 46.61
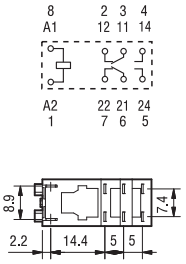	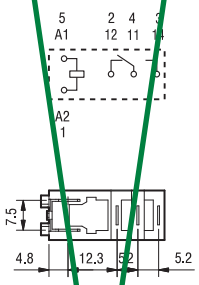

FOR UL RATINGS SEE:
"General technical information" page V

Contact specification			
Contact configuration		2 CO (DPDT)	1 CO (SPDT)
Rated current/Maximum peak current	A	8/15	16/25 *
Rated voltage/Maximum switching voltage	V AC	250/440	250/440
Rated load AC1	VA	2,000	4,000
Rated load AC15 (230 V AC)	VA	350	750
Single phase motor rating (230 V AC)	kW	0.37	0.55
Breaking capacity DC1: 30/110/220 V	A	6/0.5/0.15	12/0.5/0.15
Minimum switching load	mW (V/mA)	300 (5/5)	300 (5/5)
Standard contact material		AgNi	AgNi
Coil specification			
Nominal voltage (U_N)	V AC (50/60 Hz)	12 - 24 - 48 - 110 - 120 - 230 - 240	
	V DC	12 - 24 - 48 - 110 - 125	
Rated power	VA/W	1.2/0.5	1.2/0.5
Operating range	AC	$(0.8...1.1)U_N$	$(0.8...1.1)U_N$
	DC	$(0.73...1.1)U_N$	$(0.73...1.1)U_N$
Holding voltage	AC/DC	$0.8U_N$ /$0.4U_N$	$0.8U_N$ /$0.4U_N$
Must drop-out voltage	AC/DC	$0.2U_N$ /$0.1U_N$	$0.2U_N$ /$0.1U_N$
Technical data			
Mechanical life AC/DC	cycles	$10 \cdot 10^6$	$10 \cdot 10^6$
Electrical life at rated load AC1	cycles	$100 \cdot 10^3$	$100 \cdot 10^3$
Operate/release time	ms	10/3	15/5
Insulation between coil and contacts (1.2/50 µs)	kV	6 (8 mm)	6 (8 mm)
Dielectric strength between open contacts	V AC	1,000	1,000
Ambient temperature range	°C	–40 ... +70	–40 ... +70
Environmental protection		RT II	RT II
Approvals (according to type)			

* With the $AgSnO_2$ material the maximum peak current is 80 A - 5 ms on normally open contact.

Ordering information

46.52.8.120.0054

A

Example: 46 series Miniature industrial relay, 1 CO (SPDT), 24 V DC coil, lockable test button and mechanical indicator.

4	6	.	6	1	.	9	.	0	2	4	.	A: 0	B: 0	C: 4	D: 0

Series

Type
5 = Spade/blade solder terminal (2.5x0.5)mm
6 = Spade/blade terminal Faston 187 (4.8x0.5)mm

No. of poles
1 = 1 pole, 16 A
2 = 2 poles, 8 A

Coil version
9 = DC
8 = AC (50/60 Hz)

Coil voltage
See coil specifications 120

A: Contact material
0 = AgNi
4 = $AgSnO_2$ (46.61 only)
5 = AgNi + Au

B: Contact circuit
0 = CO (nPDT)

D: Special versions
0 = Standard

C: Options
2 = Mechanical indicator
4 = Lockable test button + mechanical indicator
54 = Lockable test button + LED (AC) + mechanical indicator
74 = Lockable test button + double LED (DC non-polarized) + mechanical indicator

Selecting features and options: only combinations in the same row are possible.
Preferred selections for best availability are shown in **bold.**

Type	Coil version	A	B	C	D
46.52	AC - DC	**0** - 5	**0**	2 - **4**	**0**
	AC	0 - 5	0	54	/
	DC	0 - 5	0	74	/
46.61	AC - DC	**0** - 4 - 5	**0**	2 - **4**	**0**
	AC	0 - 4 - 5	0	54	/
	DC	0 - 4 - 5	0	74	/

Special versions for Rail Applications on request

Descriptions: Options

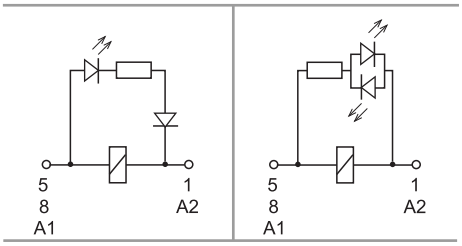

C: Option 54
LED (AC)

C: Option 74
LED (DC, non-polarized)



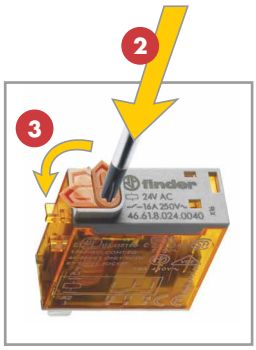

Lockable test button and mechanical flag indicator (0040, 0054, 0074)

The dual-purpose Finder test button can be used in two ways:
Case 1) The plastic pip (located directly below the test button) remains intact. In this case, when the test button is pushed, the contacts operate. When the test button is released the contacts return to their former state.
Case 2) The plastic pip is broken-off (using an appropriate cutting tool). In this case, (in addition to the above function), when the test button is pushed and rotated, the contacts are latched in the operating state, and remain so until the test button is rotated back to its former position.
In both cases ensure that the test button actuation is swift and decisive.

V1-2015, www.findernet.com

A

Technical data

Insulation according to EN 61810-1						
			1 pole		2 pole	
Nominal voltage of supply system		V AC	230/400		230/400	
Rated insulation voltage		V AC	250	400	250	400
Pollution degree			3	2	3	2
Insulation between coil and contact set						
Type of insulation			Reinforced (8 mm)		Reinforced (8 mm)	
Overvoltage category			III		III	
Rated impulse voltage		kV (1.2/50 µs)	6		6	
Dielectric strength		V AC	4,000		4,000	
Insulation between adjacent contacts						
Type of insulation			—		Basic	
Overvoltage category			—		III	
Rated impulse voltage		kV (1.2/50 µs)	—		4	
Dielectric strength		V AC	—		2,000	
Insulation between open contacts						
Type of disconnection			Micro-disconnection		Micro-disconnection	
Dielectric strength		V AC/kV (1.2/50 µs)	1,000/1.5		1,000/1.5	
Conducted disturbance immunity						
Burst (5...50)ns, 5 kHz, on A1 - A2			EN 61000-4-4		level 4 (4 kV)	
Surge (1.2/50 µs) on A1 - A2 (differential mode)			EN 61000-4-5		level 3 (2 kV)	
Other data			**46.61**		**46.52**	
Bounce time: NO/NC		ms	2/6		1/4	
Vibration resistance (10...150)Hz: NO/NC		g	20/12		20/15	
Shock resistance		g	20		20	
Power lost to the environment	without contact current	W	0.6		0.6	
	with rated current	W	1.6		2	
Recommended distance between relays mounted on PCB		mm	≥ 5			

Contact specification

F 46 - Electrical life (AC) v contact current
Type 46.52

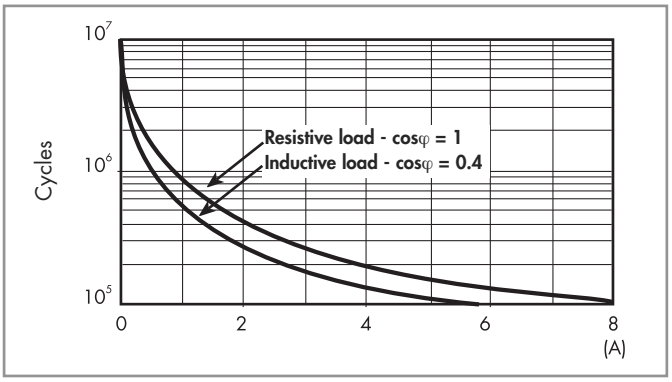

F 46 - Electrical life (AC) v contact current
Type 46.61

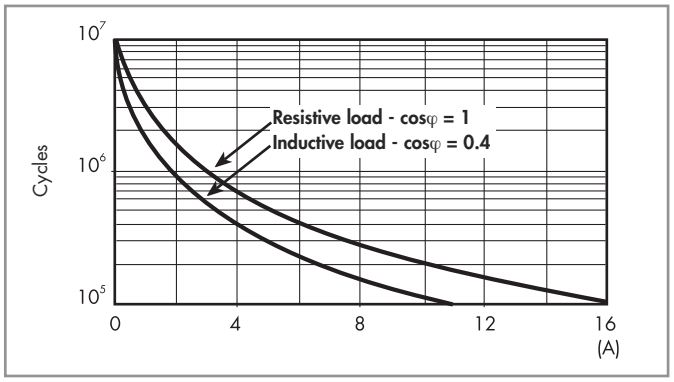

H 46 - Maximum DC1 breaking capacity

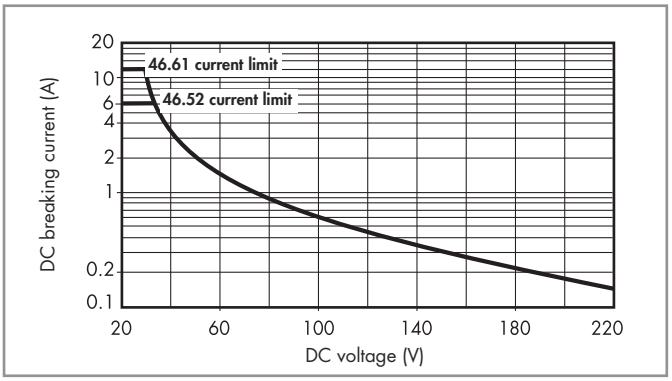

- When switching a resistive load (DC1) having voltage and current values under the curve, an electrical life of ≥ 100·10³ can be expected.
- In the case of DC13 loads, the connection of a diode in parallel with the load will permit a similar electrical life as for a DC1 load.
  Note: the release time for the load will be increased.

I-2014, www.findernet.com

Coil specifications

A

DC coil data

Nominal voltage U_N	Coil code	Operating range U_{min}	Operating range U_{max}	Resistance R	Rated coil consumption I at U_N
V		V	V	Ω	mA
12	**9**.012	8.8	13.2	300	40
24	**9**.024	17.5	26.4	1,200	20
48	**9**.048	35	52.8	4,800	10
110	**9**.110	80	121	23,500	4.7
125	**9**.125	91.2	138	32,000	3.9

AC coil data

Nominal voltage U_N	Coil code	Operating range U_{min}	Operating range U_{max}	Resistance R	Rated coil consumption I at U_N
V		V	V	Ω	mA
12	**8**.012	9.6	13.2	80	90
24	**8**.024	19.2	26.4	320	45
48	**8**.048	38.4	52.8	1,350	21
110	**8**.110	88	121	6,900	9.4
120	**8**.120	96	132	9,000	8.4
230	**8**.230	184	253	28,000	5
240	**8**.240	192	264	31,500	4.1

R 46 - DC coil operating range v ambient temperature

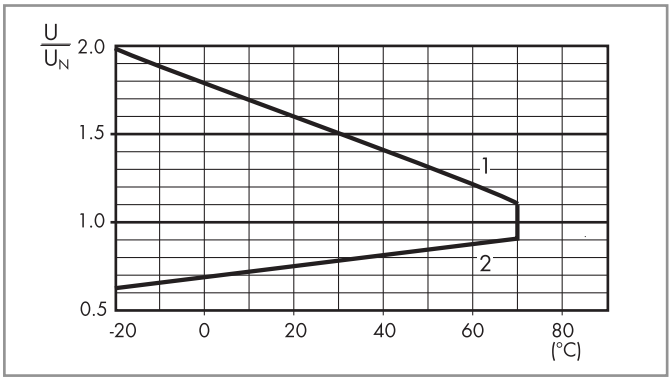

1 - Max. permitted coil voltage.
2 - Min. pick-up voltage with coil at ambient temperature.

R 46 - AC coil operating range v ambient temperature

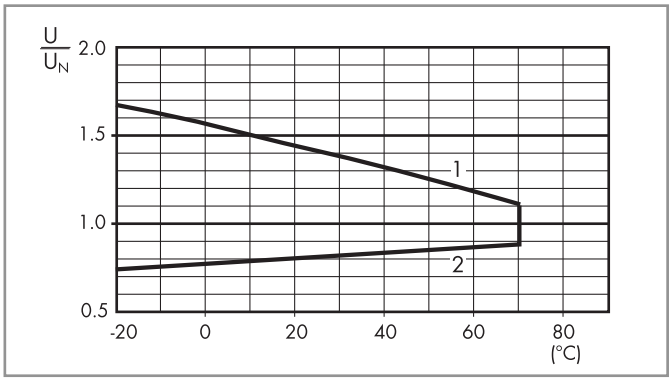

1 - Max. permitted coil voltage.
2 - Min. pick-up voltage with coil at ambient temperature.

Accessories



046.05



046.05 with relay

Flange mount adaptor for relays types 46.52 and 46.61 — 046.05

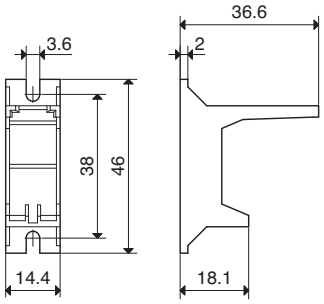

046.05

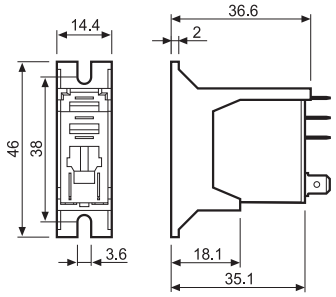

046.05 with relay



046.07



046.07 with relay

35 mm rail adaptor for relays types 46.52 and 46.61 — 046.07

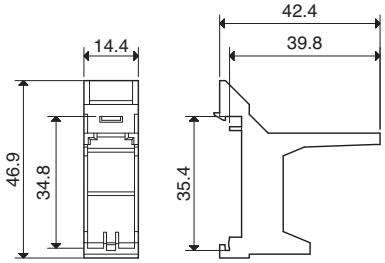

046.07

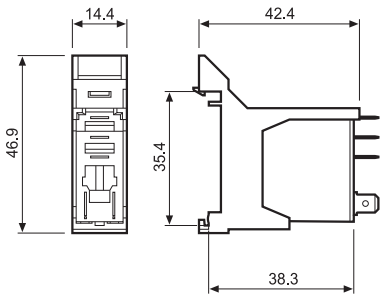

046.07 with relay



060.72

Sheet of marker tags for relays types 46.52 and 46.61 (72 tags), 6x12mm — 060.72

I-2014, www.findernet.com

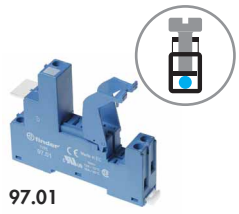

97.01

Approvals (according to type):



097.01

Screw terminal socket panel or 35 mm rail (EN 60715) mount		**97.01 (blue)**	**97.01.0 (black)**	**97.02 (blue)**	**97.02.0 (black)**
For relay type		46.61		46.52	
Accessories					
Plastic retain and release clip (supplied with socket - packaging code SPA)		097.01			
Metal retaining clip		097.71			
Identification tag		095.00.4			
8-way jumper link		095.18 (blue)		095.18.0 (black)	
Modules (see table below)		99.02			
Timer modules (see table below)		86.30			
Technical data					
Rated current		16 A - 250 V AC		8 A - 250 V AC	
Dielectric strength		6 kV (1.2/50 µs) between coil and contacts			
Protection category		IP 20			
Ambient temperature	°C	–40...+70 (see diagram L97)			
Screw torque	Nm	0.8			
Wire strip length	mm	8			
Max. wire size for 97.01 and 97.02 sockets		solid wire		stranded wire	
	mm^2	1x6 / 2x2.5		1x4 / 2x2.5	
	AWG	1x10 / 2x14		1x12 / 2x14	

L 97 - Rated current vs ambient temperature
(for 46.61 relay / 97.01 socket combination)

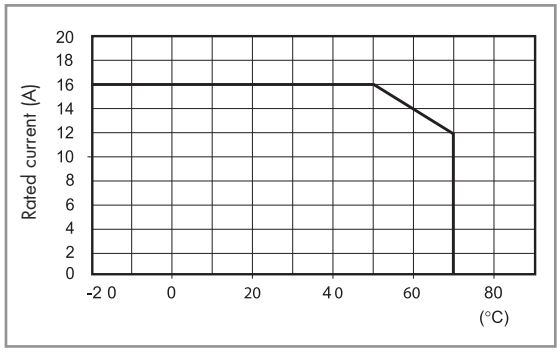

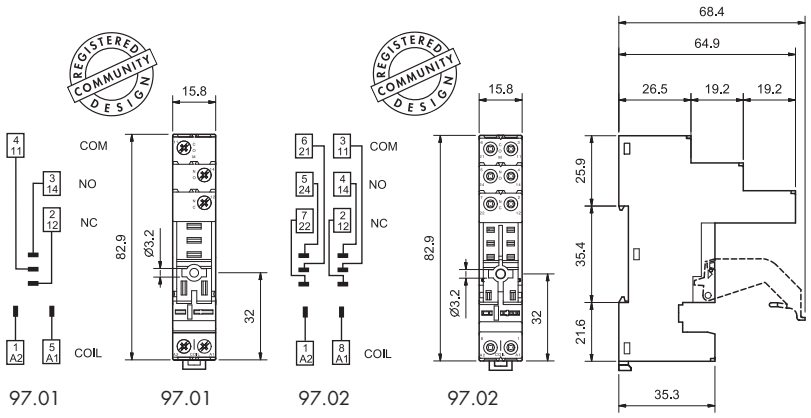

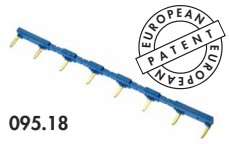

095.18

8-way jumper link for 97.01 and 97.02 sockets	095.18 (blue)	095.18.0 (black)
Rated values	10 A - 250 V	

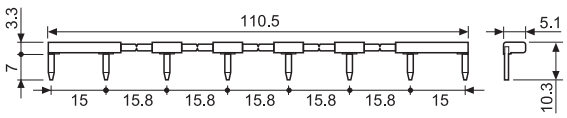



86.30

86 series timer module	
(12...24)V AC/DC; Bi-function: AI, DI; (0.05s...100h)	86.30.0.024.0000
(110...125)V AC; Bi-function: AI, DI; (0.05s...100h)	86.30.8.120.0000
(230...240)V AC; Bi-function: AI, DI; (0.05s...100h)	86.30.8.240.0000

Approvals (according to type):



99.02

Approvals (according to type):

DC Modules with non-standard polarity (+A2) on request.

99.02 coil indication and EMC suppression modules for 97.01 and 97.02 sockets		
Diode (+A1, standard polarity)	(6...220)V DC	99.02.3.000.00
LED	(6...24)V DC/AC	99.02.0.024.59
LED	(28...60)V DC/AC	99.02.0.060.59
LED	(110...240)V DC/AC	99.02.0.230.59
LED + Diode (+A1, standard polarity)	(6...24)V DC	99.02.9.024.99
LED + Diode (+A1, standard polarity)	(28...60)V DC	99.02.9.060.99
LED + Diode (+A1, standard polarity)	(110...220)V DC	99.02.9.220.99
LED + Varistor	(6...24)V DC/AC	99.02.0.024.98
LED + Varistor	(28...60)V DC/AC	99.02.0.060.98
LED + Varistor	(110...240)V DC/AC	99.02.0.230.98
RC circuit	(6...24)V DC/AC	99.02.0.024.09
RC circuit	(28...60)V DC/AC	99.02.0.060.09
RC circuit	(110...240)V DC/AC	99.02.0.230.09
Residual current by-pass	(110...240)V AC	99.02.8.230.07

t-2014, www.findernet.com

55 Series - Miniature General Purpose Relays 7 -10 A

- *Plug-in versions*
- *AC or DC coils*
- *Lockable test button and mechanical flag indicator as standard on 2 and 4 CO relays types*
- *Sockets and accessories: see 94, 99 and 86 series*

	55.32	55.33	55.34
	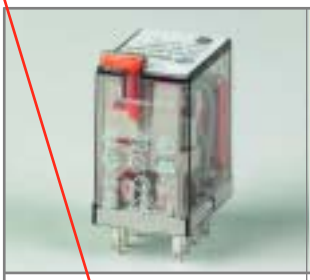		
	- 2 pole, 10 A - Plug-in for use with 94 Series sockets	- 3 pole, 10 A - Plug-in for use with 94 Series sockets	- 4 pole, 7 A - Plug-in for use with 94 Series sockets
	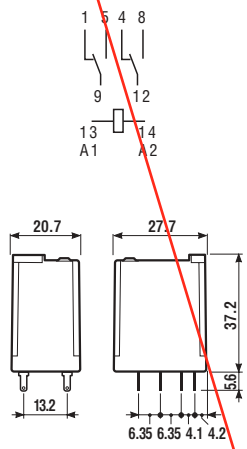	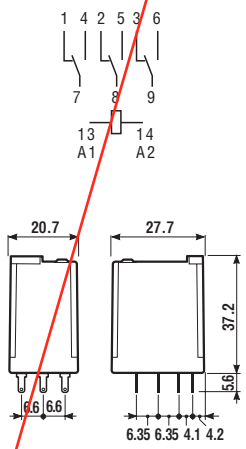	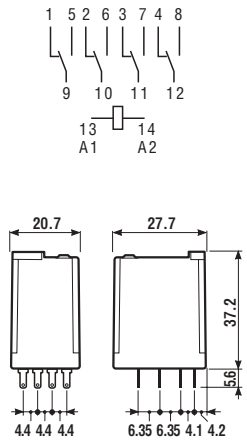
Contact specifications			
Contact configuration	2 CO	3 CO	4 CO
Rated current / Maximum peak current A	10/20	10/20	7/15
Rated voltage / Maximum switching voltage V AC	250/400	250/400	250/250
Rated load in AC1 VA	2,500	2,500	1,750
Rated load in AC15 (230 VAC) VA	500	500	350
Single phase motor rating (230 VAC) kW	0.37	0.37	0.125
Breaking capacity in DC1: 30/110/220V A	10/0.25/0.12	10/0.25/0.12	7/0.25/0.12
Minimum switching load mW (V/mA)	300 (5/5)	300 (5/5)	300 (5/5)
Standard contact material	AgNi	AgNi	AgNi
Coil specifications			
Nominal voltage (U_N) V AC (50/60 Hz)	6 - 12 - 24 - 48 - 60 - 110 - 120 - 230 - 240		
V DC	6 - 12 - 24 - 48 - 60 - 110 - 125 - 220		
Rated power AC/DC VA (50 Hz)/W	1.5/1	1.5/1	1.5/1
Operating range AC	$(0.8...1.1)U_N$	$(0.8...1.1)U_N$	$(0.8...1.1)U_N$
DC	$(0.8...1.1)U_N$	$(0.8...1.1)U_N$	$(0.8...1.1)U_N$
Holding voltage AC/DC	$0.8\ U_N / 0.5\ U_N$	$0.8\ U_N / 0.5\ U_N$	$0.8\ U_N / 0.5\ U_N$
Must drop-out voltage AC/DC	$0.2\ U_N / 0.1\ U_N$	$0.2\ U_N / 0.1\ U_N$	$0.2\ U_N / 0.1\ U_N$
Technical data			
Mechanical life AC/DC cycles	$20 \cdot 10^6 / 50 \cdot 10^6$	$20 \cdot 10^6 / 50 \cdot 10^6$	$20 \cdot 10^6 / 50 \cdot 10^6$
Electrical life at rated load AC1 cycles	$200 \cdot 10^3$	$200 \cdot 10^3$	$150 \cdot 10^3$
Operate/release time ms	9/3	9/3	9/3
Insulation according to EN 61810-5	3.6 kV/2	3.6 kV/2	2.5 kV/2
Insulation between coil and contacts (1.2/50µs) kV	3.6	3.6	3.6
Dielectric strength between open contacts V AC	1,000	1,000	1,000
Ambient temperature range °C	–40...+85	–40...+85	–40...+85
Environmental protection	RT I	RT I	RT I
Approvals: (according to type)	CE B SP D FI GOST IRAM Lloyd's Register N RINA S c UL us NF VDE		

85 Series - Miniature Plug-in Timers 7 - 10 A

- *Plug-in timer relay*
- *2, 3 or 4 CO contact available*
- *Seven time scales, from 0.05s to 100h*
- *Multifunctions*
- *Sockets: see 94 series*

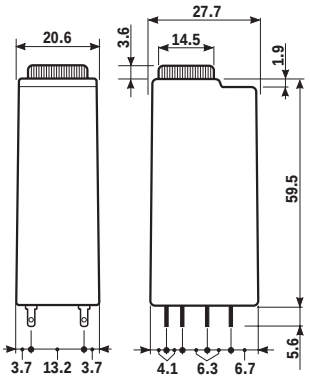

	85.02	85.03	85.04
			
	- 2 Pole, 10A - AC/DC supply non polarized - Plug-in for use with 94 series sockets	- 3 Pole, 10A - AC/DC supply non polarized - Plug-in for use with 94 series sockets	- 4 Pole, 7A - AC/DC supply non polarized - Plug-in for use with 94 series sockets
	AI: ON delay **DI:** ON pulse **SW:** Symmetrical recycler: ON start **GI:** Fixed pulse (0.5s) delayed	**AI:** ON delay **DI:** ON pulse **SW:** Symmetrical recycler: ON start **GI:** Fixed pulse (0.5s) delayed	**AI:** ON delay **DI:** ON pulse **SW:** Symmetrical recycler: ON start **GI:** Fixed pulse (0.5s) delayed
	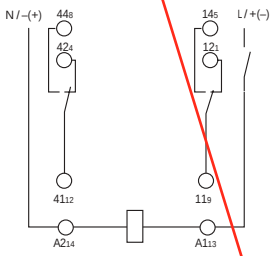	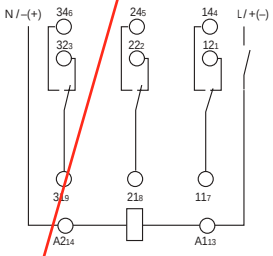	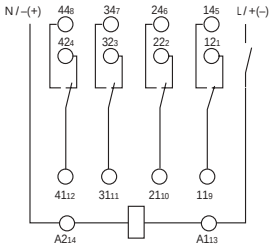
	wiring diagram	wiring diagram	wiring diagram
Contact specifications			
Contact configuration	2 CO	3 CO	4 CO
Rated current / Maximum peak current A	10 / 20	10 / 20	7 / 15
Rated voltage / Maximum switching voltage V AC	250 / 400	250 / 400	250 / 250
Rated load in AC1 VA	2,500	2,500	1,750
Rated load in AC15 (230 VAC) VA	500	500	350
Single phase motor rating (230 VAC) kW	0.37	0.37	0.125
Breaking capacity in DC1: 30 / 110 / 220V A	10 / 0.25 / 0.1	10 / 0.25 / 0.1	7 / 0.25 / 0.1
Minimum switching load mW(V/mA)	300 (5/5)	300 (5/5)	300 (5/5)
Standard contact material	AgNi	AgNi	AgNi
Supply specifications			
Nominal voltage V AC(50/60Hz)	230...240	230...240	230...240
V AC/DC	12 - 24 - 48 - 110...125 (non polarized)		
Rated power AC/DC VA (50Hz) / W	2 / 2	2 / 2	2 / 2
Operating range AC	$(0.85...1.1)U_N$	$(0.85...1.1)U_N$	$(0.85...1.1)U_N$
DC	$(0.85...1.1)U_N$	$(0.85...1.1)U_N$	$(0.85...1.1)U_N$
Technical data			
Specified time range	(0.05...1) s, (0.5...10) s, (5...100) s, (0.5...10) min, (5...100) min, (0.5...10) h, (5...100) h		
Repeatability %	± 2	± 2	± 2
Recovery time ms	≤ 20	≤ 20	≤ 20
Minimum control impulse ms	—	—	—
Setting accuracy-full range %	± 5	± 5	± 5
Electrical life at rated load in AC1 cycles	$200 \cdot 10^3$	$200 \cdot 10^3$	$200 \cdot 10^3$
Ambient temperature range °C	–20...+60	–20...+60	–20...+60
Protection category	IP 40	IP 40	IP 40
Approvals: (according to type)	CE GOST cULus		



Relay type	55.32		55.33		55.32, 55.34	
Colour	BLUE	BLACK	BLUE	BLACK	BLUE	BLACK
Screw terminal socket: panel or 35 mm rail (EN 50022) mount retaining clip 094.71 supplied with socket packaging code SMA	94.72	94.72.0	94.73	94.73.0	94.74	94.74.0
Retaining clip	094.71					
Modules (see table below)	99.01					

Approvals
(according to type):

GOST

- RATED VALUES: 10 A - 250 V
- DIELECTRIC STRENGTH:
  ≥ 2 kV AC
- PROTECTION CATEGORY: IP 20
- AMBIENT TEMPERATURE:
  (-40...+70)°C
- SCREW TORQUE: 0.5 Nm
- WIRE STRIP LENGTH: 8 mm
- MAX WIRE SIZE:

	solid wire	stranded wire
mm²	1x2.5 / 2x1.5	1x2.5 / 2x1.5
AWG	1x14 / 2x16	1x14 / 2x16

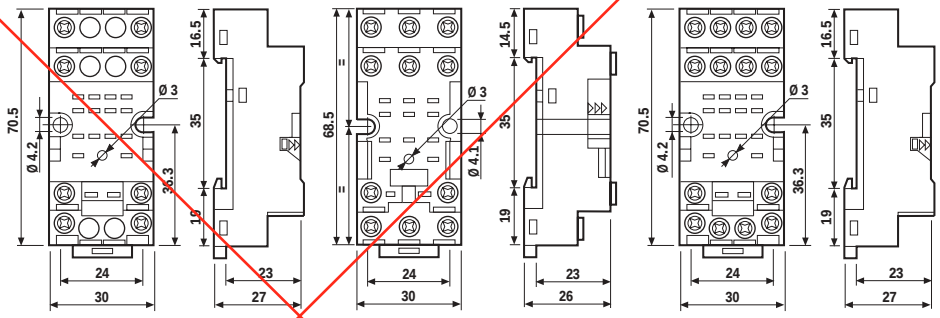

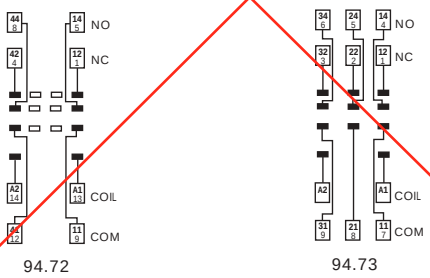

94.72 94.73 94.74

Features

Plug-in mount
10 A General purpose relay

- 2 & 3 pole changeover contacts
- Cadmium Free contacts (preferred version)
- AC coils & DC coils
- UL Listing (certain relay/socket combinations)
- Contact material options
- Lockable test button with mechanical flag indicator (preferred version)
- 90 series sockets
- Coil EMC suppression
- Timer accessories 86 series
- European Patent

	60.12	60.13
		
	• 2 pole, 10 A power contacts • 8 pin plug-in	• 3 pole, 10 A power contacts • 11 pin plug-in
	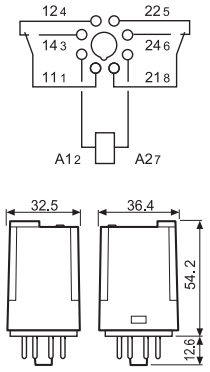	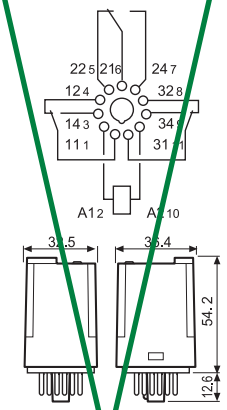

FOR UL RATINGS SEE:
"General technical information" page V

Contact specification			
Contact configuration		2 CO (DPDT)	3 CO (3PDT)
Rated current/Maximum peak current	A	10/20	10/20
Rated voltage/Maximum switching voltage	V AC	250/400	250/400
Rated load AC1	VA	2,500	2,500
Rated load AC15 (230 V AC)	VA	500	500
Single phase motor rating (230 V AC)	kW	0.37	0.37
Breaking capacity DC1: 30/110/220 V	A	10/0.4/0.15	10/0.4/0.15
Minimum switching load	mW (V/mA)	500 (10/5)	500 (10/5)
Standard contact material		AgNi	AgNi
Coil specification			
Nominal voltage (U_N)	V AC (50/60 Hz)	6 - 12 - 24 - 48 - 60 - 110 - 120 - 230 - 240 - 400	
	V DC	6 - 12 - 24 - 48 - 60 - 110 -125 - 220	
Rated power AC/DC	VA (50 Hz)/W	2.2/1.3	2.2/1.3
Operating range	AC	$(0.8...1.1)U_N$	$(0.8...1.1)U_N$
	DC	$(0.8...1.1)U_N$	$(0.8...1.1)U_N$
Holding voltage	AC/DC	0.8 U_N/0.5 U_N	0.8 U_N/0.5 U_N
Must drop-out voltage	AC/DC	0.2 U_N/0.1 U_N	0.2 U_N/0.1 U_N
Technical data			
Mechanical life AC/DC	cycles	$20 \cdot 10^6/50 \cdot 10^6$	$20 \cdot 10^6/50 \cdot 10^6$
Electrical life at rated load AC1	cycles	$200 \cdot 10^3$	$200 \cdot 10^3$
Operate/release time	ms	11/4	11/4
Insulation between coil and contacts (1.2/50 µs)	kV	4	3.6
Dielectric strength between open contacts	V AC	1,000	1,000
Ambient temperature range	°C	–40...+70	–40...+70
Environmental protection		RT I	RT I
Approvals (according to type)			

A

Ordering information

60.12.8.120.0050

Example: 60 series plug-in relay, 3 CO (3PDT), 12 V DC coil, test button and mechanical indicator.

6 0	. 1	3	. 9	. 0 1 2	. 0	0	4	0
Series	Type	No. of poles	Coil version	Coil voltage	A	B	C	D

Series

Type
1 = 8/11 pin plug-in
6 = Faston 187 (4.8x0.8 mm) with flange mount

No. of poles
2 = 2 pole
3 = 3 pole

Coil version
4 = Current sensing (60.12/13 only)
8 = AC (50/60 Hz)
9 = DC

Coil voltage
See coil specifications 120

A: Contact material
0 = Standard
5 = AgNi + Au

B: Contact circuit
0 = CO (nPDT)
2 = Bifurcated contacts 60.12/13 - 6 A only

D: Special versions
0 = Standard

C: Options
0 = None
2 = Mechanical indicator
3 = LED (AC)
4 = Lockable test button + mechanical indicator
5* = Lockable test button + LED (AC)
54* = Lockable test button + LED (AC) + mechanical indicator
6* = LED + diode (DC, polarity positive to pin 2)
7* = Lockable test button + LED + diode (DC, polarity positive to pin 2)
74* = Lockable test button + LED + diode (DC, polarity positive to pin 2) + mechanical indicator

* Options not available for 220 V DC and 400 V AC versions.

Selecting features and options: only combinations in the same row are possible.
Preferred selections for best availability are shown in **bold.**

Type	Coil version	A	B	C	D
60.12/13	AC	**0**	**0**	0 - 2 - 3 - **4** - 5	**0**
	AC	0	0	54	/
	AC	5	0 - 2	0 - 2 - 3 - 4 - 5	0
	AC	5	0 - 2	54	/
	DC	**0**	**0**	0 - 2 - **4** - 6 - 7	**0**
	DC	0	0	74	/
	DC	5	0 - 2	0 - 2 - 4 - 6 - 7	0
	DC	5	0 - 2	74	/
	current sensing	0	0	4	0
60.62/63	AC-DC	**0** - 5	**0**	**0**	**0**

Descriptions: Options and Special versions

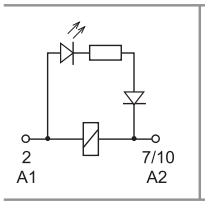

C: Option 3, 5, 54
LED (AC)

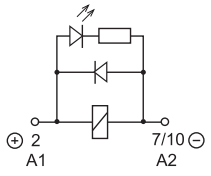

C: Option 6, 7, 74
LED + diode (DC, polarity positive to pin 2)

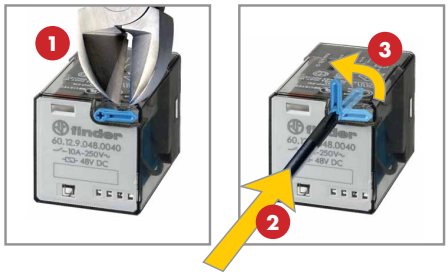

Lockable test button and mechanical flag indicator (0040, 0050, 0054, 0070, 0074)

The dual-purpose Finder test button can be used in two ways:
Case 1) The plastic pip (located directly above the test button) remains intact. In this case, when the test button is pushed, the contacts operate. When the test button is released the contacts return to their former state.
Case 2) The plastic pip is broken-off (using an appropriate cutting tool). In this case, (in addition to the above function), when the test button is pushed and rotated, the contacts are latched in the operating state, and remain so until the test button is rotated back to its former position. In both cases ensure that the test button actuation is swift and decisive.

IV-2014, www.findernet.com

90 Series - Socket overview for 60 series relays


90.03

See page 90

Module	Socket	Relay	Description	Mounting	Accessories
99.02	**90.02**	60.12	**Screw terminal (Box clamp) socket**	Panel or 35 mm rail (EN 50022) mount	- Coil indication and EMC suppression modules - Jumper link - Timer modules - Metal retaining clip
	**90.03**	60.13	Double A1 terminal		


90.21

See page 91

Module	Socket	Relay	Description	Mounting	Accessories
99.01	**90.20**	60.12	**Screw terminal (Box clamp) socket**	Panel or 35 mm rail (EN 50022) mount	- Coil indication and EMC suppression modules - Metal retaining clip
	**90.21**	60.13			


90.83.3

See page 92

Module	Socket	Relay	Description	Mounting	Accessories
—	**90.82.3**	60.12	**Screw terminal (Box clamp) socket**	Panel or 35 mm rail (EN 50022) mount	- Metal retaining clip
—	**90.83.3**	60.13			


90.23

See page 92

Module	Socket	Relay	Description	Mounting	Accessories
—	**90.22**	60.12	**Screw terminal (Box clamp) socket**	Panel or 35 mm rail (EN 50022) mount	- Metal retaining clip
—	**90.23**	60.13			


90.26

See page 93

Module	Socket	Relay	Description	Mounting	Accessories
—	**90.26**	60.12	**Screw terminal (Plate clamp) socket**	Panel or 35 mm rail (EN 50022) mount	- Metal retaining clip
—	**90.27**	60.13			


90.12

See page 93

Module	Socket	Relay	Description	Mounting	Accessories
—	**90.12**	60.12	**Flange mount solder socket**	M3 screw fixing	—
—	**90.13**	60.13			

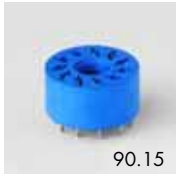
90.15

See page 93

Module	Socket	Relay	Description	Mounting	Accessories
—	**90.14**	60.12	**PCB socket**	PCB	—
—	**90.14.1**	60.12			
—	**90.15**	60.13			
—	**90.15.1**	60.13			


90.03

Approvals (according to type):

Screw terminal (Box clamp) socket panel or 35 mm rail (EN 50022) mount		90.02 Blue	90.02.0 Black	90.03 Blue	90.03.0 Black
For relay type		60.12		60.13	
Accessories					
Metal retaining clip		090.33			
6-way jumper link		090.06			
Identification tag		090.00.2			
Modules (see table below)		99.02			
Timer modules (see table below)		86.00, 86.10, 86.20			
Technical data					
Rated values		10 A - 250 V			
Dielectric strength		≥ 2 kV AC			
Protection category		IP 20			
Ambient temperature	°C	–40...+70			
Screw torque	Nm	0.6			
Wire strip length	mm	10			
Max. wire size for 90.02 and 90.03 sockets		solid wire		stranded wire	
	mm²	1x6 / 2x2.5		1x4 / 2x2.5	
	AWG	1x10 / 2x14		1x12 / 2x14	

60

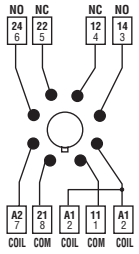

90.02

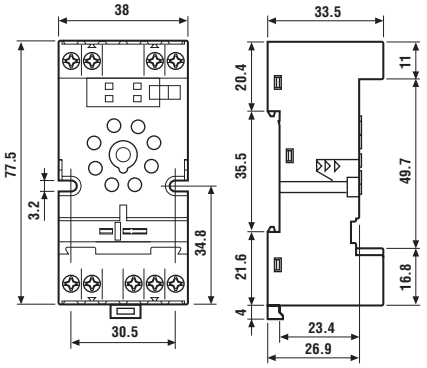

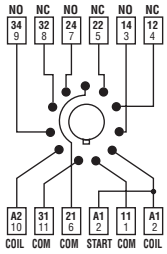

90.03

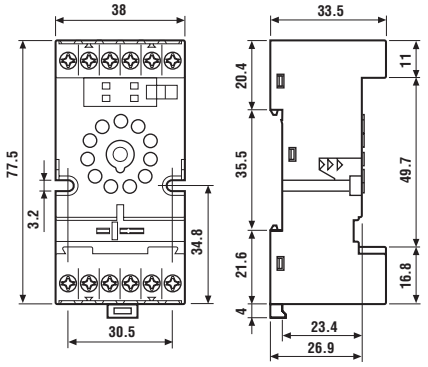


090.06

6-way jumper link for 90.02 and 90.03 sockets	090.06
Rated values	10 A - 250 V

Approvals (according to type):

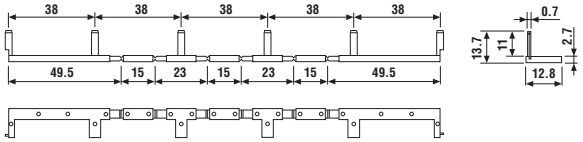


86.00

86 series timer modules (see technical data pages 181/182/187)	
Multi-voltage: (12...240)V AC/DC; Multi-functions: AI, DI, SW, BE, CE, DE, EE, FE; (0.05 s...100 h)	86.00.0.240.0000
Mono-function: (12...24)V AC/DC; function AI; (1.5 s...60 min)	86.10.0.024.0000
Mono-function: (12...24)V AC/DC; function DI; (1.5 s...60 min)	86.20.0.024.0000

Approvals (according to type):


99.02

Approvals (according to type):

99.02 coil indication and EMC suppression modules (see technical data pages 247/248)		**Blue***
Diode (+A1, standard polarity)	(6...220)V DC	99.02.3.000.00
Diode (+A2, non-standard polarity)	(6...220)V DC	99.02.2.000.00
LED	(6...24)V DC/AC	99.02.0.024.59
LED	(28...60)V DC/AC	99.02.0.060.59
LED	(110...240)V DC/AC	99.02.0.230.59
LED + Diode (+A1, standard polarity)	(6...24)V DC	99.02.9.024.99
LED + Diode (+A1, standard polarity)	(28...60)V DC	99.02.9.060.99
LED + Diode (+A1, standard polarity)	(110...220)V DC	99.02.9.220.99
LED + Diode (+A2, non-standard polarity)	(6...24)V DC	99.02.9.024.79
LED + Diode (+A2, non-standard polarity)	(28...60)V DC	99.02.9.060.79
LED + Diode (+A2, non-standard polarity)	(110...220)V DC	99.02.9.220.79
LED + Varistor	(6...24)V DC/AC	99.02.0.024.98
LED + Varistor	(28...60)V DC/AC	99.02.0.060.98
LED + Varistor	(110...240)V DC/AC	99.02.0.230.98
RC circuit	(6...24)V DC/AC	99.02.0.024.09
RC circuit	(28...60)V DC/AC	99.02.0.060.09
RC circuit	(110...240)V DC/AC	99.02.0.230.09
Residual current by-pass (62 kΩ/1W)	(110...240)V AC	99.02.8.230.07

* Modules in Black housing are available on request.

Packaging code

How to code and identify retaining clip and packaging options for sockets.

Code options according to the last three letters:

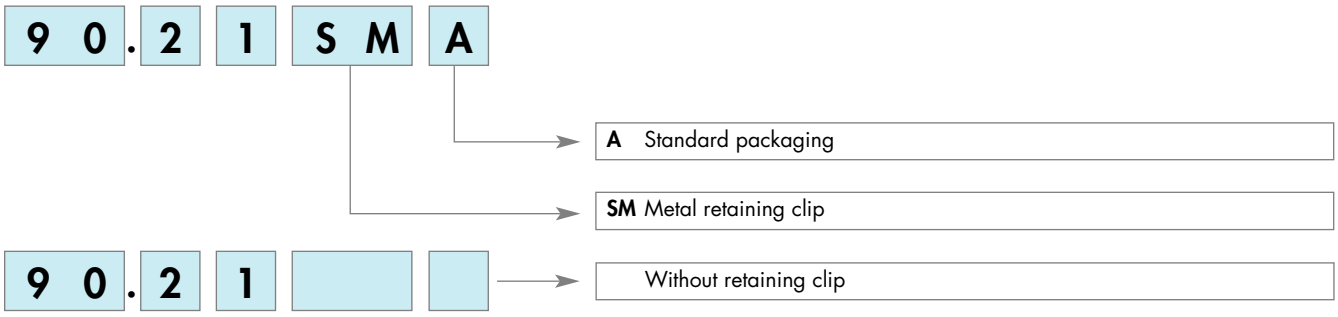

60

(4)

CIRCUIT BREAKERS, DISCONNECTS and ACCESSORIES

Specification Section 16410

SCHNEIDER ELECTRIC

CIRCUIT BREAKERS

40amp ……. M9F42140
20amp ……. M9F21120
10amp ……. M9F21110
15amp ……. M9F42215
15amp ……. M9F21116
5amp ……. M9F21105
4amp ……. M9F21104
2amp ……. M9F21102
1amp ……. M9F21101

CUTLER-HAMMER

3P CIRCUIT BREAKER

100amp ……. F3P100

EXTERNAL OPERATING HANDLE

FHMVD12B

ALLEN BRADLEY

30amp NON-FUSED DISCONNECT

194R-N30-1753

12” SHAFT

194R-S1

RED/YELLOW HANDLE

194R-PY

UL/CSA + IEC/EN 60947-2 + GB

C60SP - UL 1077 - B, C, D curves – Tunnels terminals

DB105730 DB105729 DB405227

UL 1077 / CSA C22.2 No 235 / IEC/EN 60947-2 / GB 14048-2

C60SP are multi-standard miniature circuit breakers and supplementary protection as defined by UL 1077. It combines following functions:

- circuit protection against short-circuit currents
- circuit protection against overload currents
- tripping and fault indication by the addition of auxiliaries.

PB116660-40



PB116661-40



Number of 18 mm (0.71 in.) poles	Rating (A) 25°C/77°F	Breaking capacity (kA rms) AIR UL 1077 / CSA C22.2 No 235				Icu IEC 60947-2			
	Voltage (Ue)	277 V ~	240 V ~	120 V ~	65 V ⎓	440 V ~	415 V ~	240 V ~	60 V ⎓
1P	0.5 to 32	10	14	14	10	-	3	10	20
	40 to 63	5	10	10	10	-	3	10	20
	Voltage (Ue)	480Y/277 V ~		240 V ~	125 V ⎓	440 V ~	415	240 V ~	125 V ⎓
2P	1 to 25	10		14	10	6	10	20	-
	32	10		14	-	6	10	20	-
3P/4P	2 to 32	10		14	-	6	10	20	-
2P/3P/4P	40 to 63	5		10		6	10	20	-

Electrical diagrams

1P	2P	3P	4P
DB408642	DB408610	DB408611	DB408643v

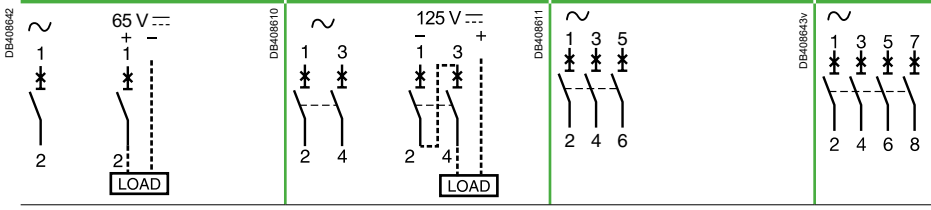

M9F21102
M9F21105
M9F21116
M9F21120

Catalog numbers

Tunnel terminal connection

Type	1P				2P			
Auxiliaries	Remote indication and tripping, see page 43							
Rating (In)	Curve B	Curve C	Curve D (=K)	Width in 9 mm modules	Curve B	Curve C	Curve D (=K)	Width in 9 mm modules
C60SP								
0.5	M9F21170	M9F22170	M9F23170	2	-	-	-	4
1	M9F21101	M9F22101	M9F23101		M9F21201	M9F22201	M9F23201	
2	M9F21102	M9F22102	M9F23102		M9F21202	M9F22202	M9F23202	
3	M9F21103	M9F22103	M9F23103		M9F21203	M9F22203	M9F23203	
4	M9F21104	M9F22104	M9F23104		M9F21204	M9F22204	M9F23204	
5	M9F21105	M9F22105	M9F23105		M9F21205	M9F22205	M9F23205	
6	M9F21106	M9F22106	M9F23106		M9F21206	M9F22206	M9F23206	
8	M9F21108	M9F22108	M9F23108		M9F21208	M9F22208	M9F23208	
10	M9F21110	M9F22110	M9F23110		M9F21210	M9F22210	M9F23210	
13	M9F21113	M9F22113	M9F23113		M9F21213	M9F22213	M9F23213	
16	M9F21116	M9F22116	M9F23116		M9F21216	M9F22216	M9F23216	
20	M9F21120	M9F22120	M9F23120		M9F21220	M9F22220	M9F23220	
25	M9F21125	M9F22125	M9F23125		M9F21225	M9F22225	M9F23225	
32	M9F21132	M9F22132	M9F23132		M9F21232	M9F22232	M9F23232	
40	M9F21140	M9F22140	M9F23140		M9F21240	M9F22240	M9F23240	
45	M9F21145	M9F22145	M9F23145		M9F21245	M9F22245	M9F23245	
50	M9F21150	M9F22150	M9F23150		M9F21250	M9F22250	M9F23250	
63	M9F21163	M9F22163	M9F23163		M9F21263	M9F22263	M9F23263	
Accessories	See page 48							

3P Series Molded Case Circuit Breakers Overview

Overview

Designed to provide branch and feeder circuit protection in industrial control panels, this line of Molded Case Circuit Breakers supplies protection against overload in conductors and short circuit in connected equipment such as motors. They are UL listed for installation in UL 508 control panels. Their small size, in relation to standard circuit breakers or other comparable devices, saves panel space. Four frame sizes and all standard accessories are available.

Features

- UL489 listed performance for branch circuit overcurrent protection and disconnecting means
- Patented contact conductor designs featuring high-speed "blow-open" action, providing superior performance when high level fault currents produce extra-ordinary electromechanical forces
- Advanced arc extinguishing technology
- Toggle handle provides three positions (on/off/tripped) along with visual indicators
- Manufactured in ISO 9000 certified facilities
- HACR (heating, air conditioning and refrigeration) rated
- G-Frame and F-Frame breakers are suitable for reverse feed
- K-Frame and L-Frame breakers include 3-pole adjustable magnetic trip.



Manufactured by Eaton Corporation

Listings

- UL 489 MCCB, File: E7819
- Field-installed accessories: UL file E64983
- CSA 22.2 No.5, File: 43556
- IEC 157-1
- NEMA Standards Pub. No. AB1-1993

Note: These parts available for sale to North American locations only.

Molded Case Circuit Breakers Technical Specifications

Circuit Breaker Type	Ampere Rating at 40°C	No. Poles	Volts		Type of Trip*	Federal Specification W-C-375b	UL 489 Interrupting Ratings (rms Symmetrical Amperes) (kA)			
			AC	DC			Volts AC (50/60 Hz)			Volts DC
							240	*480*	*600*	*250***
G-Frame	15 -100	3	480	250	N.I.T.U	13b	65	22	–	10
F-Frame	60 - 225	3	600	250	N.I.T.U	22a	65	35	18	10
K-Frame	250 - 400	3	600	250	I.T.U	23a	65	35	25	10
L-Frame	400 - 600	3	600	250	I.T.U	23a	65	35	25	22

Note: N.I.T.U denotes non-interchangeable trip unit. I.T.U denotes interchangeable trip unit.
****Note: For DC or 1-phase AC applications, use the two outside poles of the 3-pole circuit breaker***

Molded Case Circuit Breakers Part Numbering System

G 3P - 020 - AUX

Accessory Description Code
AUX: auxiliary contact
STAC: shunt trip AC
STDC: shunt trip DC
UVAC: undervoltage release
UVDC: undervoltage release

Amp Rating

3 Pole

Molded Case Circuit Breaker Series (by frame size)
G: 15 to 100 Amp
F: 60 to 225 Amp
K: 250 to 400 Amp
L: 400 to 600 Amp

3P Series Molded Case Circuit Breakers
60 - 225 Amp F-Frame



F3P-200



FHMVD12B



F1S03C



3TA150F6K



3TA225FD

F-Frame circuit breakers are available as a single unit, or with accessories pre-installed only. Accessories are not field installable on this frame size.

This frame size is suitable for reverse feed use. All breakers include base mounting hardware for panel mount applications.

F-Frame Series Three Pole Molded Case Circuit Breakers

Part Number	Price	Description	Pre-Installed Accessories*	Ampere Rating	Voltage	Interrupt Capacity
F3P-060	$618.00	Molded case circuit breaker with non-adjustable thermal magnetic trip; line and load lug terminals included.	None	60	240VAC 480VAC 600VAC 250VDC**	65kA 35kA 18kA 10kA
F3P-070	$663.00		None	70		
F3P-080	$663.00		None	80		
F3P-090	$625.00		None	90		
F3P-100	$663.00		None	100		
F3P-125	$663.00		None	125		
F3P-150	$663.00	Molded case circuit breaker with non-adjustable thermal magnetic trip; line and load lug terminals included.	None	150		
F3P-150-AUX	$728.00		auxiliary contact, SPDT			
F3P-150-STAC	$728.00		120 VAC shunt trip			
F3P-150-STDC	$728.00		24 VDC shunt trip			
F3P-150-UVAC	$728.00		120 VAC undervoltage release			
F3P-175	$663.00	Molded case circuit breaker with non-adjustable thermal magnetic trip; line and load lug terminals included.	None	175		
F3P-200	$663.00	Molded case circuit breaker with non-adjustable thermal magnetic trip; line and load lug terminals included.	None	200		
F3P-200-AUX	$728.00		auxiliary contact, SPDT			
F3P-200-STAC	$728.00		120 VAC shunt trip			
F3P-200-STDC	$728.00		24 VDC shunt trip			
F3P-200-UVAC	$728.00		120 VAC undervoltage release			
F3P-225	$663.00	Molded case circuit breaker with non-adjustable thermal magnetic trip; line and load lug terminals included.	None	225		

*Note: Available accessories are pre-installed on G-Frame and F-Frame Molded Case Circuit Breakers. They are not field installable or interchangeable.

**Note: For DC or 1-phase AC applications, use the two outside poles of the 3-pole circuit breaker

F-Frame Accessory Selection Guide

Part Number	Price	Description
FHMVD12B	$80.00	NEMA 1/12 rotary handle for F-frame. Position indicating. Lock-off feature. Shaft length: 12"
HM1R12X	$113.00	NEMA 4/4X rotary handle for F-frame. Position indicating. Lock-off feature. Shaft length: 12"
HM1R24X	$127.00	NEMA 4/4X rotary handle for F-frame. Position indicating. Lock-off feature. Shaft length: 24"
F1S03C	$346.00	NEMA 1/12 flex shaft cable operator for F-frame. Flange mountable. Lockable. Cable length: 3'
F1S06C	$376.00	NEMA 1/12 flex shaft cable operator for F-frame. Flange mountable. Lockable. Cable length: 6'
3TA150F6K	$56.00	Multi-wire connector to allow 6 wires to be connected to the F-frame. UL for copper only. 14-6 AWG. Package of 3
3TA225FD	$84.00	Replacement lug kit for F-frame. Package of 3

F-Frame Electrical Ratings [1,2]

	Max Volts	Frequency	Max Amperes	Dielectric Withstand Voltage	Notes
F-Frame Auxiliary Switch	125 VAC[3]	50/60 Hz	1	2500	1. Endurance: 5000 electrical operations plus 4000 mechanical operatons. 2. Pigtail wire size: 18 AWG (0.82 mm2) 3. Minimum switching circuit capabilities of 100 micro-amperes and 15 VDC minimum. 4. Non-inductive load
	600 VAC	50/60 Hz	6		
	125 VDC	DC	0.50[4]		
	250 VDC	DC	0.25[4]		

F-Frame Shunt Trip	Supply Voltage	Min Operating Voltage	VA
	120 VAC	36 VAC	570
	24 VDC	9 VDC	400

F-Frame Under-voltage Release Mechanism	Supply Voltage	Dropout Voltage		Pickup Voltage	VA
		Min	Max	Maximum	
	120 VAC	44.5 VAC	77.0 VAC	93.5 VAC	1.5

AWG Wire Range Specifications

Circuit Breaker	Ampere Rating	Wire Type	AWG Wire Range	Metric Wire Range mm²
F-Frame	60 - 100	Cu/Al	14 - 1/0	2.5 - 50
	125 - 225		4 - 4/0	25 - 95

3P Series Molded Case Circuit Breakers
100 Amp F-Frame

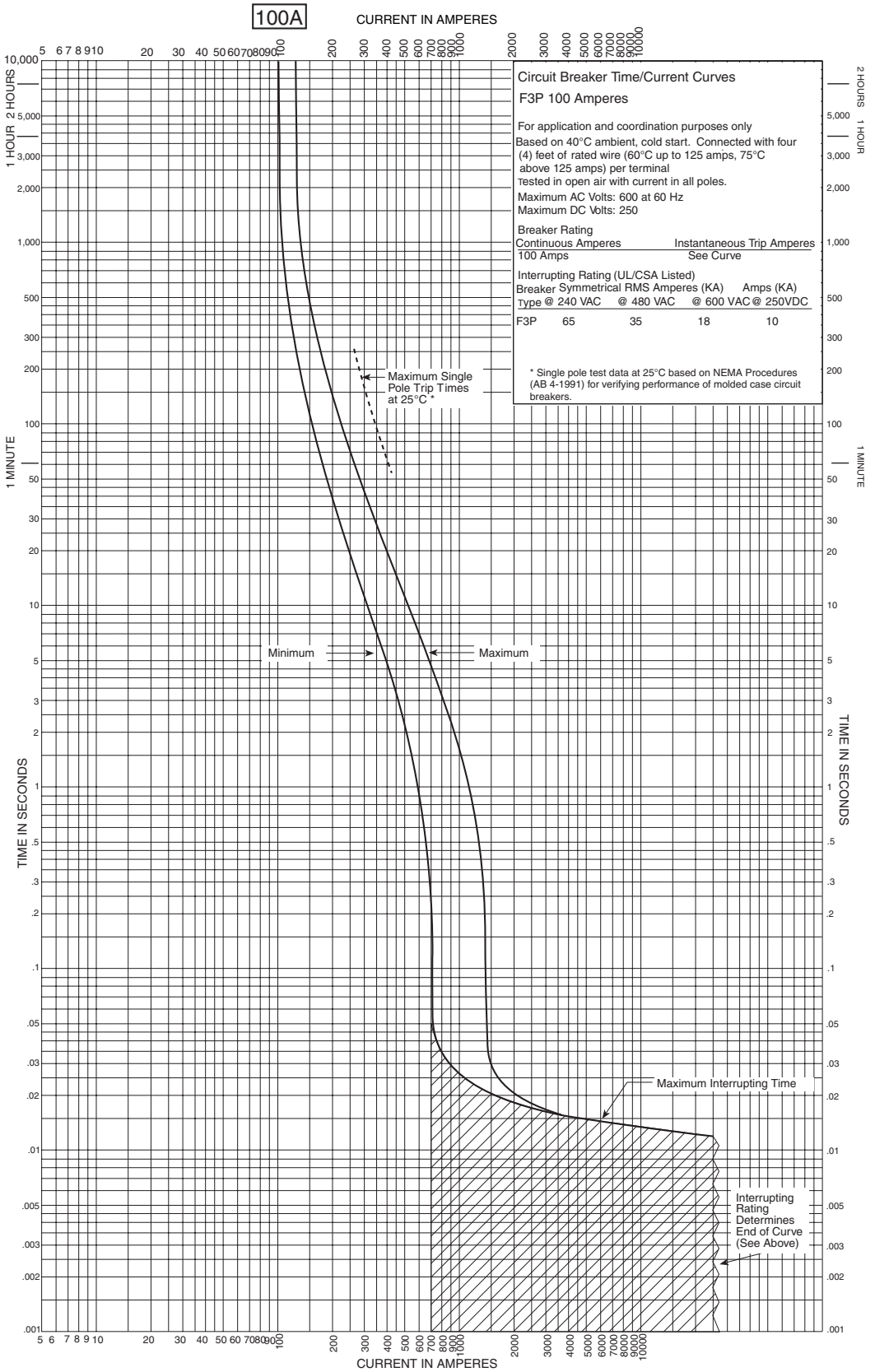

3P Series Molded Case Circuit Breakers – Dimensions

15 - 100 Amp G-Frame

inches(mm)

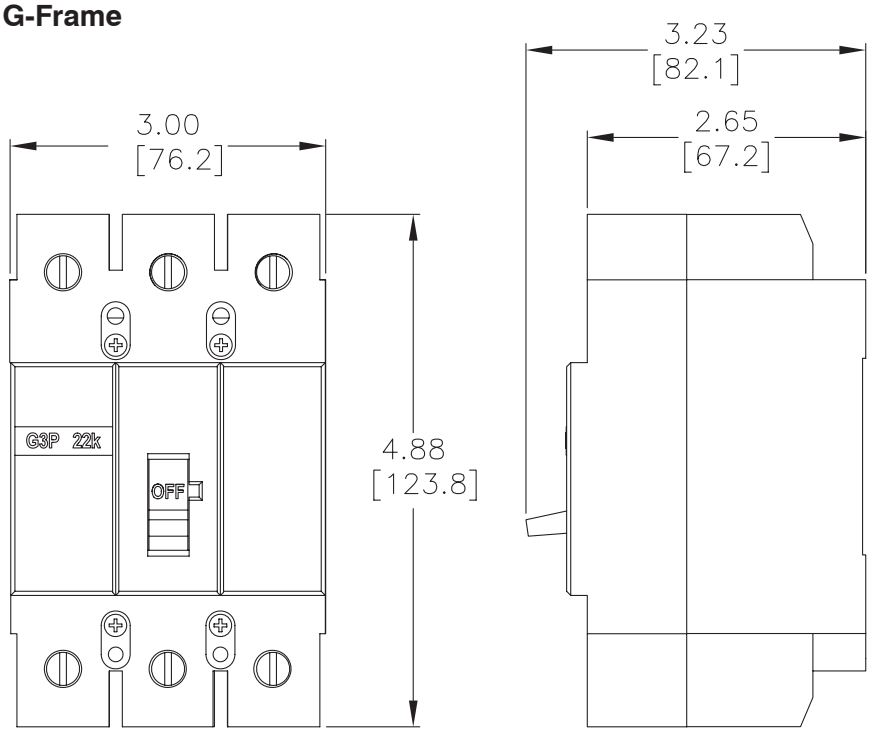

60 - 225 Amp F-Frame

inches(mm)

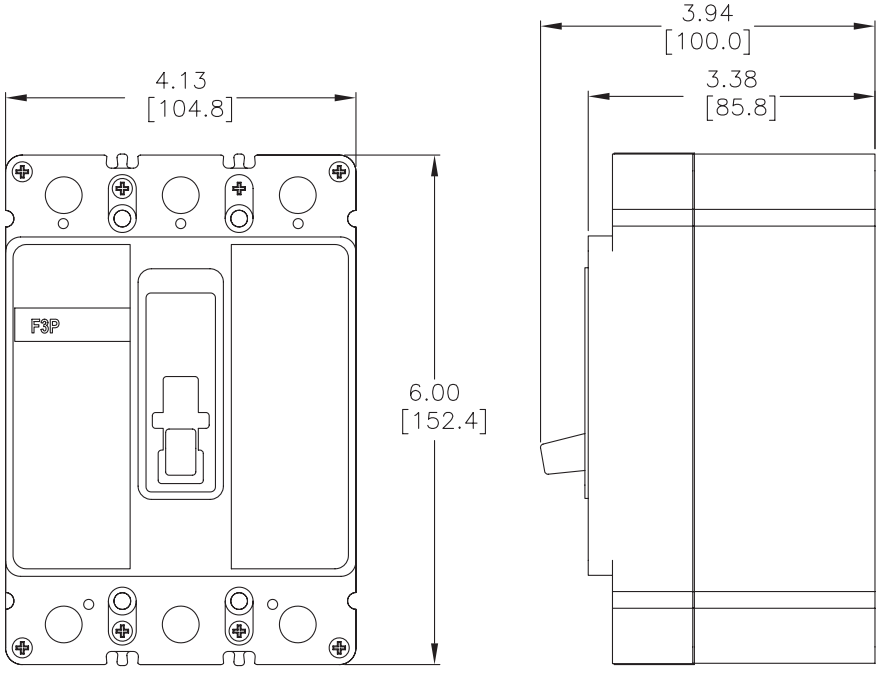

3P Series Molded Case Circuit Breakers – Accessories

Field Mountable Accessories

Rotary Handle

A universal rotary handle is available for each frame size of molded case circuit breaker. The handles are suitable for use with NEMA 1, 12, 4 or 4x enclosures. Features include the following:

- Large handle easily accommodates gloves
- Global ON/OFF markings (I/ON, O/OFF) and TRIP indication on handle
- Access Handle Lock-Off by pressing arrow on handle insert
- Door interlock and defeater
- Metal shaft and base
- Pipe valve operation (ON=Vertical, OFF=Horizontal) with 90 degree rotation
- UL 489, IEC 947-1/-2, CSA



GHMVD12B



HM1R12X

Rotary Handle Accessory Selection Guide		
Part Number	*Price*	*Description*
GHMVD06B	$72.00	NEMA 1/12 black rotary handle for G-Frame MCCB. Shaft length: 6"
GHMVD12B	$80.00	NEMA 1/12 black rotary handle for G-Frame MCCB. Shaft length: 12"
FHMVD12B	$80.00	NEMA 1/12 black rotary handle for F-Frame MCCB. Shaft length: 12"
HM1R12X	$113.00	NEMA 4/4X black rotary handle for F-Frame MCCB. Shaft length: 12"
HM1R24X	$127.00	NEMA 4/4X black rotary handle for F-Frame MCCB. Shaft length: 24"
KHMVD12B	$115.00	NEMA 1/12 black rotary handle for K-Frame MCCB. Shaft length: 12"
HM3R12X	$139.00	NEMA 4/4X black rotary handle for K-Frame MCCB. Shaft length: 12"
HM3R24X	$155.00	NEMA 4/4X black rotary handle for K-Frame MCCB. Shaft length: 24"
LHMVD12B	$133.00	NEMA 1/12 black rotary handle for L-Frame MCCB. Shaft length: 12"
HM4R12X	$181.00	NEMA 4/4X black rotary handle for L-Frame MCCB. Shaft length: 12"
HM4R24X	$191.00	NEMA 4/4X black rotary handle for L-Frame MCCB. Shaft length: 24"

Flex Shaft™ Flexible Handle

Meeting crucial time limits for shutdown procedures is easier with an externally mounted handle. The flexible handle makes it possible to operate the circuit breaker externally and can be used in enclosures of varying depths and heights. It can be used with NEMA 1, NEMA 3R and NEMA 12 enclosures, and it accepts up to three padlock shackles.

Note: A minimum bending radius of four inches is necessary for proper operation.



F0S03C

Flexible Handle Accessory Selection Guide		
Part Number	*Price*	*Description*
F0S03C	$310.00	NEMA 1/12 flex shaft cable operator for G-Frame MCCB. Cable length: 3'
F0S06C	$346.00	NEMA 1/12 flex shaft cable operator for G-Frame MCCB. Cable length: 6'
F1S03C	$346.00	NEMA 1/12 flex shaft cable operator for F-Frame MCCB. Cable length: 3'
F1S06C	$376.00	NEMA 1/12 flex shaft cable operator for F-Frame MCCB. Cable length: 6'
F3S03C	$413.00	NEMA 1/12 flex shaft cable operator for K-Frame MCCB. Cable length: 3'
F3S06C	$435.00	NEMA 1/12 flex shaft cable operator for K-Frame MCCB. Cable length: 6'
F4S04C	$472.00	NEMA 1/12 flex shaft cable operator for L-Frame MCCB. Cable length: 4'
F4S06C	$545.00	NEMA 1/12 flex shaft cable operator for L-Frame MCCB. Cable length: 6'

RW-100 RCP

Allen-Bradley

Fused and Non-Fused Disconnect Switches

Bulletin 194R

Topic	Page
Summary of Changes	1
Overview	2
Catalog Number Explanation	4
Product Selection	5
Accessories	11
Specifications	19
Approximate Dimensions	30
Disconnect Switch Kits	50
Fuse Description	55

Summary of Changes

This publication contains new and updated information as indicated in the following table.

Topic	Pages
Updated product descriptions	13
Updated quantity that is required and package quantity for terminal shields	16
Updated enclosure dimensions	48-49

Overview

	 Bulletin 194R-C, J, H, B, D, F, L, N, NU	 Bulletin 194R-NE
Product Type	Fused and non-fused rotary disconnect switches	Non-fused IEC rotary disconnect switches
Current Range	20…1200 A	125…1250 A
Main Applications	• UL 98 ratings “suitable as service entrance disconnecting means” • UL 508, CSA ratings “suitable as at-motor disconnect” • UL and IEC applications	• Disconnecting means • IEC applications
Functionality	• 3- or 4-pole fusible or non-fusible disconnect for standard OFF-ON or emergency stop in a main panel disconnect application • 4th pole available as modular accessory • Test mode switch position	• 3- or 4-pole non-fusible disconnect for standard OFF-ON or emergency stop in a main panel disconnect application • 4th pole available as modular accessory
Mounting Styles	20…63 A: DIN Rail/Panel mounting; 100…1250 A: Panel mounting	Panel mounting
Handles	• Available in rotary styles, UL Type 1/3R/4/4X/12, IP66, standard, or test mode versions • Handle colors in black and red/yellow and padlockable versions • 30 A/60 A legend markers (optional) — uses Cat. No. 1492-MS6X12 markers	• Available in rotary styles, UL Type 1/3R/4/4X/12, IP66, or standard versions • Handle colors in black and red/yellow and padlockable versions
Open Switch or Enclosed	• Open switch • Enclosed: UL/CSA rated enclosure for 20…63 A devices	• Open switch
UL/CSA Electrical Ratings:		
Rated Voltage U_e	690V AC	690V AC
Rated Current I_e	20…1200 A	125…1250 A
Rated Power P_e [FLA]	Varies w/ 1- or 3-phase switch, voltage	Varies w/ 1- or 3-phase switch, voltage
Short-Circuit Ratings	200 kA	200 kA
Mechanical Life [ops]	Up to 10 000	Up to 10 000
IEC Rated Current I_e		
Ambient Operational Temperature	-20…+60 °C (-4…+140 °F)	-20…+60 °C (-4…+140 °F)
Ambient Enclosed Temperature	-20…+60 °C (-4…+140 °F)	-20…+60 °C (-4…+140 °F)
Ambient Storage Temperature	-40…+65 °C (-40…+149 °F)	-40…+65 °C (-40…+149 °F)
Protection class per IEC 529	• Disconnects with terminal shroud or terminal screen: IP20 • 194R-J100-1753, front mounting: IP20 • Fuse carriers: IP30	• Front-mounted disconnects with terminal shroud or terminal screen: IP20
Optional Accessories	• IP66 handles • Multi-length shafts • Auxiliary contacts • Terminal covers • NFPA 79 internal handle with shaft	• IP66 handles • Multi-length shafts • Auxiliary contacts • Terminal covers

Standards Compliance and Certifications—Bulletin 194R-C, J, H, B, D, F, L, N, NU

Standards Compliance
UL 98
UL 508
CSA C22.2, No. 14
IEC/EN 60947-3 Low Voltage Switchgear and Controlgear part 3
BS EN60947-3
VDE 0660
NEMA KS-1

Certifications
CE Marked
CSA Certified (File No. LR1234)
UL Listed (File No. E 14841, Guide NLRV; File No. E 47426, Guide WHTY)

Standards Compliance and Certifications—Bulletin 194R-NE

Standards Compliance		Certifications
IEC/EN 60947-3 Low Voltage Switchgear and Controlgear part 3		CE Marked

Product Overview

The Bulletin 194R line of fused and non-fused rotary disconnect switches provides the flexibility to meet worldwide applications. The disconnect switches are UL Listed and CSA Certified and are designed to meet IEC 60947-3, VDE, DIN, BS, and applicable NEMA requirements.

Features

- 20 A...1250 A Sizes
- Fused switch versions:
  - BS88 -DIN
  - CSA HRCII-C - CSA HRCI-MISC - HRC-L
  - UL Class J- UL Class CC - UL Class L
  - NFC
- IP66 (Type 3R, 3, 12, 4, 4X) operating handle ingress ratings
- Handle with or without test mode
- Padlockable handle for up to three padlocks
- 6 auxiliary contacts can be added
- Suitable as service entrance disconnecting means (UL 98)
- Suitable as at-motor disconnecting means (UL 508)

Catalog Number Explanation

Fourth pole (20...63 A), additional auxiliary contacts, and handle options available in accessory section.



Cat. No. 194R-J30-1753



Cat. No. 194R-NE160-1753

194R	–	J	30	–	1753	S
		a	b		c	d

a	
Fuse Type	
Code	**Description**
C	UL Class CC, CSA Type HRCI-MISC
J	UL Class J, CSA Type HRCI-J
H	CSA Type HRCII-C
B	BS88(3)
D	DIN(3)
F	NFC(3)
L	UL Class L, CSA Type HRC-L
N	Non-fused (20…63 A)(1)
NE	Non-fused, IEC (100…1250 A)(1)(2)
NU	Non-fused, UL (100…1200 A)(1)

b	
Load Size(3)	
Code	**Description**
20	20 A (BS88)
25	25 A (NFC)
30	30 A (CC, J, HRCI-J)
	30 A (non-fused)
	30 A (HRCII-C)
32	32 A (BS88, NFC)
	32 A (DIN)
60	60 A (J, HRCI-J, HRCII-C)
	60 A (non-fused)
63	63 A (BS88, DIN, NFC)
100	100 A (BS88, DIN, NFC, J, HRCI-J)
125	125 A (BS88, DIN, NFC, Non-fused)
160	160 A (BS88, DIN, NFC, Non-fused)
200	200 A (BS88, DIN, NFC, J, HRCI-J, non-fused)
250	250 A (BS88, DIN, NFC, J, HRCI-J, non-fused)
400	400 A (BS88, DIN, NFC, J, HRCI-J, non-fused)
600	600 A (BS88, DIN, NFC, J, HRCI-J, non-fused)
630	630 A (BS88, DIN, NFC, non-fused)
800	800 A (BS88, DIN, NFC, L, HRCI-L, non- fused)
1200	1200 A (Non-fused)
1250	1250 A (BS88, DIN, non-fused)

c	
No. of Poles	
Code	**Description**
1753	3-poleswitch
1754	4-pole switch (non-fused:100…1250 A)

d	
Fuse Indication	
Code	**Description**
blank	No fuse status indication
S	Fuse status indication (20…63 A)

(1) Non-fused disconnect switches must use separately installed fuses for upstream short-circuit protection
(2) Does not carry UL Certification.
(3) Fuse classes BS88, DIN, and NFC are not suitable for use in North American applications

RW-100 RCP

UL/CSA Non-fused Disconnect Switches



Cat. No. 194R-N30-1753



Cat. No. 194R-J100-1753

Note: Your order must include 1) Cat. No. of disconnect switch, 2) shaft, 3) handle, and 4) any accessories.

Fuse Description	Rated Current [A](1)	No. of Poles	Maximum Hp Ratings							Dim. Ref.	Cat. No.
			1-Phase (60 Hz)		3-Phase (60 Hz)			DC			
			120V	240V	240V	480V	600V	125V	250V		
Non-fused disconnect switches must use separately installed fuses for upstream short circuit protection.	30	3	2	3	7.5	15	20	3	5	A2	194R-N30-1753
	60	3	3	10	15	30	40	5	10	B2	194R-N60-1753
	100	3	7-1/2	15	30	75	100	10	15	F1	194R-NU100-1753
		4	7-1/2	15	30	75	100	10	15	F1	194R-NU100-1754
	200	3	—	50	75	150	200	15	15	F1	194R-NU200-1753
		4	—	50	75	150	200	15	15	F1	194R-NU200-1754
	400	3	—	—	125	250	350	20	50	F2	194R-NU400-1753
		4	—	—	125	250	350	20	50	F2	194R-NU400-1754
	600	3	—	—	200	400	350	20	50	F3	194R-NU600-1753
		4	—	—	200	400	350	20	50	F3	194R-NU600-1754
	800	3	—	—	200	500	500	—	—	F4	194R-NU800-1753
		4	—	—	200	500	500	—	—	F4	194R-NU800-1754
	1200	3	—	—	200	500	500	—	—	F4	194R-NU1200-1753
		4	—	—	200	500	500	—	—	F4	194R-NU1200-1754

(1) 30 A UL-rated device has I_{the} of 40 A per IEC. 60 A UL-rated device has I_{the} of 80 A per IEC.

Complete UL/CSA Disconnect Switch Kits

Includes disconnect switch, operating handle with defeater mechanism and operating shaft, NFPA handle, auxiliary contacts, and padlock attachment.

Catalog Number Explanation

Fourth pole (20...63 A), additional auxiliary contacts, and handle options available in accessory section.



Switch body



Operating handle



NFPA handle and shaft

194R	–	J	30	–	1753	S	–	TY	N1
		a	b		c	d		e	f

a	
Fuse Type	
Code	**Description**
C	UL Class CC, CSA Type HRCI-MISC
J	UL Class J, CSA Type HRCI-J
H	CSA Type HRCII-C
B	BS88[2]
D	DIN[2]
F	NFC[2]
N	Non-fused (20…63 A)[1]

b		
Load Size[2]		
Code	**Description**	**Dimensional Ref.[3]**
20	20 A (BS88)	A1
25	25 A (NFC)	A1
30	30 A (CC, J, HRCI-J)	A1
	30 A (Non-Fused)[1]	A2
	30 A (HRCII-C)	B1
32	32 A (BS88, NFC)	A1
	32 A (DIN)	B1
60	60 A (J, HRCI-J, HRCII-C)	B1
	60 A (Non-Fused)[1]	B2
63	63 A (BS88, DIN, NFC)	B1

c	
No. of Poles	
Code	**Description**
1753	3-pole switch

(1) Non-fused disconnect switches must use separately installed fuses for upstream short-circuit protection
(2) Fuse classes BS88, DIN, and NFC are not suitable for use in North American applications
(3) See page 33 for dimensional reference data.

d	
Fuse Indication	
Code	**Description**
blank	No fuse status indication
S[1]	Fuse status indication

e	
External Handle	
Code	**Description**
PY	Std/pistol red/yellow handle, 4/4X, IP66 (Cat. No. 194R-PY)
PB	Std/pistol black handle, 4/4X, IP66 (Cat. No. 194R-PB)
TY	Test mode red/yellow handle, 4/4X, IP66 (Cat. No. 194R-PYT)
TB	Test mode black handle, 4/4X, IP66 (Cat. No. 194R-PBT)

f	
Shaft and NFPA 79 Handle	
Code	**Description**
S1	Cat. No. 194R-S1 shaft (12 in.)
S2	Cat. No. 194R-S2 shaft (21 in.)
N1	NFPA79 handle with 12 in. shaft and guard tube
N2	NFPA79 handle with 21 in. shaft and guard tube

(1) Class C and J fuses only

(5)

REMOTE I/O

Specification Section 13450-2.2

ALLEN BRADLEY

POWER SUPPLY
1794-PS13

ETHERNET COMMUNICATION ADAPTER
1794-AENTR

120V A.C. INPUT MODULE 8 PT.
1794-IA8

120V A.C. INPUT MODULE 16 PT.
1794-IA16

ANALOG INPUT MODULE 4 PT.
1794-IF4I

ANALOG OUTPUT MODULE 4 PT.
1794-OF4I

ANALOG INPUT/OUTPUT MODULE 2 PT. / 2 PT.
1794-IF2XOF2I

TERMINAL BASE
1794-TB3

Flex I/O

In-Cabinet Modular I/O Platform

Benefits

Reduced Space: Wire direct from sensor to terminal base and eliminate terminal strip

Functionality: 4- through 32-point modules offer functions of larger rack-based I/O

Increased Productivity: Easy configuration and setup of I/O modules using wizards speeds engineeringm and installation

Reduced Downtime: Removal and Insertion Under Power (RIUP) and diagnostics

Exceptional Choices: Over 90 catalog numbers and a breadth of specialty modules meet the needs of a wide variety of applications

Network Flexibility: Communicates on EtherNet/IP, ControlNet, DeviceNet, Remote I/O and other open networks

Improved Plant Operations: HART analog modules pass through HART data to asset management software or controller for improved plant operations



Flex I/O

FLEX™ I/O offers all the functions of larger rack-based I/O without the space requirements. Its cost effectiveness, flexibility, modularity, and reliability have made it the most popular distributed I/O platform with over 4 million modules sold.

FLEX I/O helps eliminate multiple long wiring runs, reduces terminations per point, decreases engineering and installation costs and time, and substantially reduces downtime. It complements all processor platforms from Rockwell Automation for a distributed I/O solution. In addition, it acts as local I/O for the FlexLogix™ programmable automation controller for a tightly integrated control and I/O solution.

Your FLEX I/O system can communicate on EtherNet/IP™, ControlNet™, DeviceNet™, and many other open networks including, but not limited to, Remote I/O, PROFIBUS DP®, and Interbus-S. Independently select the I/O, termination style, and network to meet your application needs. Adapters and other components are available for adding to your system as your requirements change.

FLEX I/O Products

The following table lists the available FLEX I/O products.

General Specifications	
Operating Temperature	0...55 °C (32....131 °F)
Storage Temperature	-40...85 °C (-40...185 °F)
Relative Humidity	5...95% non-condensing
Shock, Operating*	30 g peak acceleration, 11(±1) ms pulse width
Shock, Non-Operating*	50 g peak acceleration, 11(±1) ms pulse width
Vibration*	Tested 5 g @ 10...500 Hz per IEC 68-2-6
	* To maintain these specifications, you must use DIN rail locks

Dimensions and Weights			
		Dimentions (HxWxD), Approx.	**Weight**
I/O Modules		46 x 94 x 53 mm (1.8 x 3.7 x 2.1 in)	0.1 kg (0.3 lb)
I/O Adapters≠		87 x 68 x 69 mm (3.4 x 2.7 x 2.7 in)	0.2 kg (0.4 lb)
Terminal Bases		94 x 94 x 69 mm (3.4 x 3.7 x 2.7 in)	0.2 kg (0.5 lb)
Power Supplies	1794-PS13	87 x 68 x 69 mm (3.4 x 2.7 x 2.7 in)	0.2 kg (0.5 lb)
	1794-PS3	87 x 94 x 69 mm (3.4 x 3.7 x 2.7 in)	0.4 kg (0.8 lb)
		≠ 1794-AENT, 1794-ACN15, and 1794-ACNR15 adapters have the following dimensions: 87 x 94 x 69 mm (3.4 x 3.7 x 2.7 in)	



30440-MC

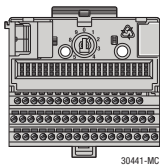

30441-MC



30442-MC

	Product	Catalog Number	Description
Communications Components	Adapter	1794-ACN15	24V dc ControlNet Adapter
		1794-ACNR15	24V dc ControlNet Redundant Media Adapter
		1794-ADN	24V dc DeviceNet Adapter
		1794-AENT	Series B Flex Adapter EtherNet I/P w/enhancements
		1794-APB	12Mbps PROFIBUS DP Adapter
		1794-APBDV1	12Mbps PROFIBUS DP –V1 Adapter
		1794-ASB	24V dc Remote I/O Adapter (to 8 modules)
		1794-ASB2	24V dc Remote I/O Adapter (to 2 modules)
Termination Styles	Terminal Base Units	1794-TB2	2-Wire Screw Clamp Terminal Base Unit
		1794-TB3	3-Wire Screw Clamp Terminal Base Unit
		1794-TB3S	3-Wire Spring Clamp Terminal Base Unit
		1794-TB32	32-Point Screw Clamp Terminal Base Unit
		1794-TB32S	32-Point Spring Clamp Terminal Base Unit
		1794-TB3T	Temperature Terminal Base Unit
		1794-TB3TS	Spring Clamp Temperature Terminal Base Unit
		1794-TB3G	Screw Clamp Grounded Terminal Base Unit
		1794-TB3GS	Spring Clamp Grounded Terminal Base Unit
		1794-TBN	Terminal Base Unit (NEMA-style)
		1794-TBNF	Fused Terminal Base Unit (NEMA-style)
		1794-TBKD	Knife Disconnect Terminal Base Unit
		1794-TB37DS	37 Pin D-Shell Termination (digital & analog modules)
		1794-TB62DS	62 Pin D-Shell Termination (32pt. I/O modules)
AC I/O	120V ac Modules	1794-IA8	120V ac 8 Input Module
		1794-IA8I	120V ac 8 Isolated Input Module
		1794-IA16	120V ac 16 Input Module
		1794-OA8	120V ac Output Module
		1794-OA8I	120V ac 8 Isolated Output Module
		1794-OA16	120V ac 16 Output Module
	220V ac Modules	1794-IM8	220V ac 8 Input Module
		1794-IM16	220V ac 16 Input Module
		1794-OM8	220V ac 8 Output Module
		1794-OM16	220V ac 16 Output Module



30443-MC



30444-MC

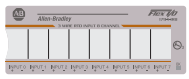

30445-MC

	Product	Catalog Number	Description
DC I/O	5V dc Modules	1794-IG16	5V dc 16 TTL Input Module
		1794-OG16	5V dc 16 TTL Output Module
	24V dc Modules	1794-IB8	24V dc 8 Sink Input Module
		1794-IB10XOB6	24V dc 10 Sink Input/6 2A Source Output Module
		1794-IB16	24V dc 16 Sink Input Module
		1794-IB16D	24V dc 16 Sink Input Module, with Diagnostics
		1794-IB16XOB16P	24V dc Combo Module, 16 Sink Inputs/ 16 Source Ouputs, Protected Module
		1794-IB32	24V dc 32 Sink Input Module
		1794-IV16	24V dc 16 Source Input Module
		1794-IV32	24V dc 32 Source Input Module
		1794-OB8	24V dc 8 Source Output Module
		1794-OB8EP	24V dc Electronically Fused 8 2A Output Module
		1794-OB16	24V dc 16 Source Output Module
		1794-OB16D	24V dc 16 Source Output Module, with Diagnostics
		1794-OB16P	24V dc 16 Source Output Module, Protected
		1794-OB32P	24V dc 32 Source Output Module, Protected
		1794-OV32	24V dc 32 Source Output Module
		1794-OV16	24V dc 16 Sink Output Module
		1794-OV16P	24V dc 16 Sink Output Module, Protected
	48V dc	1794-IC16	48V dc 16 Sink Input Module
		1794-OC16	48V dc 16 Source Output Module
	125V dc	1794-IH16	125V dc 16 Sink Input Module
Analog I/O	24V dc Analog Modules	1794-IE4XOE2	24V dc 4 Input/2 Output Analog Combo Module
		1794-IE8	24V dc Selectable Analog 8 Input Module
		1794-IE8H	24V dc Selectable Analog, 8 Input, with HART pass-thru
		1794-IE8XOE4	24V dc 8 Input/4 Output Selectable Analog Module
		1794-IE12	24V dc Selectable Analog 12 Input Module
		1794-OE4	24V dc Selectable Analog 4 Output Module
		1794-OE8H	24V dc Selectable Analog 8 Output, with HART pass-thru
		1794-OE12	24V dc Selectable Analog 12 Output Module
Isolated Analog I/O	Analog Modules	1794-IF4I	24V d-c Source Isolated 4 Input Module RW-100 ONLY
		1794-OF4I	24V dc Source Isolated 4 Output Module
		1794-IF2XOF2I	24V dc 2 Input/2 Output Isolated Analog Combo Module
		1794-IF8IH	Flex Isolated HART Analog Input
		1794-OF8IH	Flex Isolated HART Analog Output
Relay	Relay Module	1794-OW8	8 Isolated Relay Output Module, 2A normally open
Specialty I/O	Encoder Input Module	1794-ID2	24V dc 2 Channel Incremental Encoder Input Module
	Frequency Input Module	1794-IJ2	24V dc 2 Input Frequency Module
	Pulse Counter Input Module	1794-IP4	24V dc 4 Channel Pulse Counter Module
	RTD Input Module	1794-IR8	24V dc RTD Input Module
	Thermocouple/RTD Input Module	1794-IRT8	24V dc Thermocouple/RTD/mV Module
	Thermocouple/mV Input Module	1794-IT8	24V dc Thermocouple/mV Module
	Very High Speed Counter Module	1794-VHSC	24V dc 4 Digital Output Module
	SCANport Module	1204-FM1	24V dc SCANport Module (SCANBUS interface)
Power Supply	Power Supply	1794-PS13	24V dc, 1.3A
		1794-PS3	24V dc, 3.0A

Allen-Bradley

1794 FLEX I/O Communication Adapters Specifications

Standard FLEX I/O Catalog Numbers 1794-AENT, 1794-AENTR, 1794-ACN, 1794-ACNR, 1794-ACN15, 1794-ACN15K, 1794-ACNR15, 1794-ADN, 1794-ADNK, 1794-ASB, 1794-ASBK, 1794-ASBLT, 1794-ASB2, 1794-APB, 1794-APBDPV1

FLEX I/O XT Catalog Numbers 1794-AENTRXT, 1794-ACNR15XT

Topic	Page
Additional Resources	1
Available 1794 Adapter Modules	2



A FLEX I/O™ adapter module interfaces FLEX I/O modules to an I/O scanner port across a communication network. The FLEX I/O adapter module contains a built-in power supply that converts 24V DC to 5V DC necessary to transfer and receive all the I/O data and configuration for the entire rack.

Your 1794 FLEX I/O system can communicate on:

- EtherNet/IP, single media or redundant
- ControlNet, single media or redundant
- DeviceNet
- Many other open networks including, Remote I/O, PROFIBUS DP, and others from Encompass partners

Additional Resources

These documents contain additional information concerning related products from Rockwell Automation.

Resource	Description
Industrial Automation Wiring and Grounding Guidelines, publication 1770-4.1	Provides general guidelines for installing a Rockwell Automation industrial system.
Product Certifications website, http://www.rockwellautomation.com/products/certification/	Provides declarations of conformity, certificates, and other certification details.

You can view or download publications at http://www.rockwellautomation.com/literature/. To order paper copies of technical documentation, contact your local Allen-Bradley® distributor or Rockwell Automation sales representative.

Available 1794 Adapter Modules

You can select these types of adapter modules.

FLEX I/O Adapter Module Types

Network	Application Requirement
EtherNet/IP	• Plant management (material handling) • Configuration, data collection, and control on a single, high-speed network • Time-critical applications with no established schedule • Data sent regularly • Internet/Intranet connection • Built-in switch, or high availability requirement (2-port AENTR)
ControlNet	• High-speed transfer of time-critical data between controllers and I/O devices • Deterministic and repeatable data delivery • Media redundancy
DeviceNet	• Connections of low-level devices to plant floor controllers • More diagnostics for improved data collection and fault detection • Less wiring and reduced start-up time than a traditional, hard-wired system
Remote I/O	• Connections to Remote I/O networks
PROFIBUS	• Connection to PROFIBUS DP and DPV1 networks

FLEX I/O Adapters

Adapter Type	Catalog Number	Page
EtherNet/IP	1794-AENT 1794-AENTR 1794-AENTRXT	3
ControlNet	1794-ACN 1794-ACNR 1794-ACN15 1794-ACN15K 1794-ACNR15 1794-ACNR15XT	5
DeviceNet	1794-ADN 1794-ADNK	9
Remote I/O	1794-ASB 1794-ASBK 1794-ASBLT 1794-ASB2	11
PROFIBUS	1794-APB 1794-APBDPV1	14

1794-AENT, 1794-AENTR, 1794-AENTRXT

FLEX I/O EtherNer/IP adapter module, FLEX I/O dual port EtherNet/IP adapter module, and FLEX I/O dual port (extreme temperatures) EtherNet/IP adapter module

Technical Specifications - 1794-AENT, 1794-AENTR, 1794-AENTRXT

Attribute	1794-AENT/B	1794-AENTR	1794-AENTRXT
I/O module capacity	8		
Communication rate	10/100 Mbps		
Indicators	Module status – red/green Network status – red/green Link status – green	Module status – red/green Network status – red/green Link 1 status – yellow/green Link 2 status – yellow/green	
Power supply	To comply with the CE Low Voltage Directive (LVD), this equipment must be powered from a source compliant with the following: Safety Extra Low Voltage (SELV) or Protected Extra Low Voltage (PELV).		
Input voltage range	19.2…31.2V DC (includes 5% AC ripple)		
Input voltage, nom	24V DC		
Inrush current	23 A for 2 ms	18 A for 2 ms	
FlexBus output current, max	640 mA		
Isolation voltage	50V continuous, Basic Insulation Type Tested @ 1000V AC for 60 s, power to FlexBus to EtherNet		
Power consumption, max	550 mA 440 mA @ 24V DC	500 mA 400 mA @ 24V DC	
Power dissipation, max	7.3 W @ 19.2V DC	7.1 W @ 19.2V DC	6.1 W @ 19.2V DC
Thermal dissipation	24.9 BTU/hr @ 24V DC	24.2 BTU/hr @ 24V DC	20.8 BTU/hr @ 24V DC
Wire size, power conductors	0.33…3.31 mm^2 (22…12 AWG) stranded copper wire rated @ 75 °C (167 °F) or greater, 1.2 mm (3/64 in.) insulation, max		
Wire category (1)	1 - on power ports 2 - on communications ports		
Ethernet connector	1 Ethernet RJ45 Category 5	2 Ethernet RJ45 Category 5	
North American temperature code	T4A	T5	T4A
IEC Temp code	T4	T5	T4
Terminal screw torque	0.8 Nm (7 lb-in.)		
Dimensions, approx. (HxWxD)	87 x 94 x 69 mm 3.4 x 3.7 x 2.7 in.	87 x 94 x 92 mm 3.4 x 3.7 x 3.6 in.	
Weight, approx.	180 g (6.34 oz)	227 g (8.01 oz)	
Publication, Installation Instructions	1794-IN082	1794-IN131	

(1) Use this conductor category information for planning conductor routing as described in the system-level installation manual. See the Industrial Automation Wiring and Grounding Guidelines, publication 1770-4.1.

Environmental Specifications

Attribute	1794-AENT/B	1794-AENTR	1794-AENTRXT
Temperature, operating	IEC 60068-2-1 (Test Ad, Operating Cold), IEC 60068-2-2 (Test Bd, Operating Dry Heat), IEC 60068-2-14 (Test Nb, Operating Thermal Shock):		
	0…55 °C (32…131 °F)		-25…70 °C (-13…158 °F)
Temperature, surrounding air, max	55 °C (131 °F)		70 °C (158 °F)

Environmental Specifications

Attribute	1794-AENT/B	1794-AENTR	1794-AENTRXT
Temperature, nonoperating	IEC 60068-2-1 (Test Ab, Unpackaged Nonoperating Cold), IEC 60068-2-2 (Test Bb, Unpackaged Nonoperating Dry Heat), IEC 60068-2-14 (Test Na, Unpackaged Nonoperating Thermal Shock): -40…85 °C (-40…185 °F)		
Relative humidity	IEC 60068-2-30 (Test Db, Unpackaged Nonoperating Damp Heat): 5…95% noncondensing		
Vibration	IEC 60068-2-6 (Test Fc, Operating): 5 g @ 10…500 Hz		
Shock, operating	IEC 60068-2-27 (Test Ea, Unpackaged Shock): 30 g		
Shock, nonoperating	IEC 60068-2-27 (Test Ea, Unpackaged Shock): 50 g		
Emissions	CISPR 11: Group 1, Class A		
ESD immunity	IEC 61000-4-2: 6 kV contact discharges 8 kV air discharges		
Radiated RF immunity	IEC 61000-4-3: 10V/m with 1 kHz sine-wave 80% AM from 80… 2000 MHz 10V/m with 200 Hz 50% Pulse 100% AM @ 900 MHz 10V/m with 200 Hz 50% Pulse 100% AM @ 1890 MHz 3V/m with 1 kHz sine-wave 80% AM from 2000…2700 MHz		
EFT/B immunity	IEC 61000-4-4: ±4 kV @ 5 kHz on power ports ±2 kV @ 5 kHz on communications ports	±4 kV @ 5 kHz on power ports ±4 kV @ 5 kHz on communicationss ports	
Surge transient immunity	IEC 61000-4-5: ±1 kV line-line (DM) and ±2 kV line-earth (CM) on power ports ±2 kV line-earth (CM) on communications ports		
Conducted RF immunity	IEC 61000-4-6: 10V rms with 1 Hz sine-wave 80% AM from 150 kHz…80 MHz		

Certifications

Certification[1] (When marked on product)	1794-AENT/B	1794-AENTR	1794-AENTRXT
c-UL-us	UL Listed Industrial Control Equipment, certified for US and Canada. See UL File E65584. UL Listed for Class I, Division 2 Group A,B,C,D Hazardous Locations, certified for U.S. and Canada. See UL File E194810.	UL Listed Industrial Control Equipment, certified for US and Canada. See UL File E322657. UL Listed for Class I, Division 2 Group A,B,C,D Hazardous Locations, certified for U.S. and Canada. See UL File E334470.	
CE	European Union 2004/108/IEC EMC Directive, compliant with: • EN 61326-1; Meas./Control/Lab., Industrial Requirements • EN 61000-6-2; Industrial Immunity • EN 61000-6-4; Industrial Emissions • EN 61131-2; Programmable Controllers (Clause 8, Zone A & B)		
C-Tick	Australian Radiocommunications Act, compliant with: AS/NZS CISPR 11; Industrial Emissions		
EtherNet/IP	ODVA conformance tested to EtherNet/IP specifications		

Certifications

Certification[1] (When marked on product)	1794-AENT/B	1794-AENTR	1794-AENTRXT
Ex	European Union 94/9/EC ATEX Directive, compliant with: EN 60079-15; Potentially Explosive Atmospheres, Protection "n" EN 60079-0; General Requirements		
	—	EN 60079-11; Explosive Atmospheres, Protection "i"	
	II 3 G Ex nA II T4 Gc	II 3 G Ex ic nA IIC T5 Gc	II 3 G Ex ic nA IIC T4 Gc
TÜV	TÜV Certified for Functional Safety: Capable of SIL 2		
KC	Korean Registration of Broadcasting and Communications Equipment, compliant with: Article 58-2 of Radio Waves Act, Clause 3		

(1) See the Product Certification link at http://www.rockwellautomation.com/products/certification/ for Declaration of Conformity, Certificates, and other certification details.

1794-ACN, 1794-ACNR

FLEX I/O ControlNet adapter module, and FLEX I/O redundant ControlNet adapter module

Technical Specifications

Attribute	1794-ACN	1794-ACNR
I/O module capacity	8	
Communication rate	5 Mbps	
Indicators	Comm A – red/green Comm B – red/green I/O status – red/green	
ControlNet protocol	v1.25	
ControlNet port	1 ControlNet BNC	2 ControlNet BNC
Power consumption, max	400 mA, from external 24V supply	
Power supply	**NOTE:** In order to comply with CE Low Voltage Directives, you must use a Safety Extra Low Voltage (SELV) or a Protected Extra Low Voltage (PELV) power supply to power this adapter.	
Input voltage range	19.2V…31.2V DC (includes 5% AC ripple)	
Input voltage, nom	24V DC	
FlexBus output current, max	640 mA @ 5V DC	
Isolation voltage	100% tested @ 850V DC for 1 s between user power and FlexBus	
Power dissipation, max	4.6 W @ 19.2V DC	
Thermal dissipation	15.7 BTU/hr @ 19.2V DC	
Terminal screw torque	0.8…1.01 Nm (7…9 in-lb.)	
ControlNet cable	Allen-Bradley RG-6/U Quad shield coax part number 1786-RG6 (standard-PVC CM-CL2) or 1786-RG6F/A (high-flex)	
Wire size	3.31 mm^2 (12 AWG) stranded max 1.2 mm (3/64 in.), insulation, max	
Wire category	2[1]	
North American temperature code	T4A	
IEC temperature code	T4	

FLEX I/O, FLEX I/O-XT, and FLEX Ex

Allen-Bradley

Bulletin 1794 and 1797
1794-SG002G-EN-P



Allen-Bradley • Rockwell Software

Rockwell Automation

Important User Information

Solid state equipment has operational characteristics differing from those of electromechanical equipment. Safety Guidelines for the Application, Installation and Maintenance of Solid State Controls (publication SGI-1.1 available from your local Rockwell Automation sales office or online at http://www.rockwellautomation.com/literature/) describes some important differences between solid state equipment and hard-wired electromechanical devices. Because of this difference, and also because of the wide variety of uses for solid state equipment, all persons responsible for applying this equipment must satisfy themselves that each intended application of this equipment is acceptable.

In no event will Rockwell Automation, Inc. be responsible or liable for indirect or consequential damages resulting from the use or application of this equipment.

The examples and diagrams in this manual are included solely for illustrative purposes. Because of the many variables and requirements associated with any particular installation, Rockwell Automation, Inc. cannot assume responsibility or liability for actual use based on the examples and diagrams.

No patent liability is assumed by Rockwell Automation, Inc. with respect to use of information, circuits, equipment, or software described in this manual.

Reproduction of the contents of this manual, in whole or in part, without written permission of Rockwell Automation, Inc., is prohibited.

Throughout this manual, when necessary, we use notes to make you aware of safety considerations.

	**WARNING:** Identifies information about practices or circumstances that can cause an explosion in a hazardous environment, which may lead to personal injury or death, property damage, or economic loss.
	**ATTENTION:** Identifies information about practices or circumstances that can lead to personal injury or death, property damage, or economic loss. Attentions help you identify a hazard, avoid a hazard, and recognize the consequence
	**SHOCK HAZARD:** Labels may be on or inside the equipment, for example, a drive or motor, to alert people that dangerous voltage may be present.
	**BURN HAZARD:** Labels may be on or inside the equipment, for example, a drive or motor, to alert people that surfaces may reach dangerous temperatures.
IMPORTANT	Identifies information that is critical for successful application and understanding of the product.

Allen-Bradley, CompactLogix, ControlLogix, FLEX, FLEX Ex, FLEX I/O-XT, Integrated Architecture, PanelView, Rockwell Automation, Rockwell Software, and TechConnect are trademarks of Rockwell Automation, Inc.

CIP, ControlNet, DeviceNet, and Ethernet/IP are trademarks of ODVA, Inc.

Trademarks not belonging to Rockwell Automation are property of their respective companies.

Summary of Changes

New and Updated Information 7

About the FLEX I/O and FLEX Ex I/O Systems

Section 1.1

1794 FLEX I/O Overview 9
1794 FLEX I/O XT Overview 11
General FLEX I/O and FLEX I/O XT Specifications 11
Specify a FLEX I/O or FLEX I/O XT System 13

Select FLEX I/O Communication Adapters

Section 1.2

CIP Network Infrastructure 15
Select a Network 16
- EtherNet/IP Network 16
- ControlNet Network 18
- DeviceNet Network 19
- DeviceNet Communication 20
- Other Networks – Remote I/O 21

Select FLEX I/O Modules

Section 1.3

Digital I/O Modules 23
- Features 23

Select Input Filter Times for Digital Modules 26
Modules Specifications 27
- FLEX I/O Digital AC Input Modules 27
- FLEX I/O Digital AC Output Modules 29
- FLEX I/O Digital DC Input Modules 31
- FLEX I/O Digital DC Output Modules 34
- FLEX I/O Digital DC Protected Output Modules 36
- FLEX I/O Digital DC Diagnostic Modules 38
- FLEX I/O Digital DC Combination Modules 41
- FLEX I/O Digital Contact Output Modules (Relay) 42

FLEX I/O Analog, Thermocouple and RTD Modules 44
Modules Specifications 46
- FLEX I/O Analog Input Modules 46
- 1794-IE8 and 1794-IE8XT Analog 8 Input Module 47
- 1794-IE8H HART Enabled Analog 8 Input Module 48
- 1794-IE12 Analog 12 Input Module 48
- 1794-IF4I and 1794-IF4IXT Isolated Analog 4 Input Module . . . 49
- 1794-IF4ICFXT FLEX XT I/O Isolated Input Analog Module . . 50
- 1794-IF8IH HART Enabled Analog 8 Input Module 52
- 1794-IR8 RTD Input Module 53
- 1794-IRT8 and 1794-IRT8XT Thermocouple/RTD Input Module 54
- 1794-IT8 Thermocouple/mV Input Module 56
- 1794-IE8XOE4 8 Input/4 Output Analog Combination Module 58

1794-IE4XOE2 and 1794-IE4XOE2XT 4 Input/2 Output Analog Combination Modules 59
1794-IF2XOF2I and 1794-IF2XOF2IXT 2 Input/2 Output Isolated Analog Combination Module 60
FLEX I/O Analog Output Modules 61
1794-OE4 and 1794-OE4XT Analog 4 Output Module 62
1794-OE8H HART Enabled Analog 8 Output Module 63
1794-OE12 Analog 12 Output Module 64
1794-OF4I and 1794-OF4IXT Isolated Analog 4 Output Module 65
1794-OF8IH HART Isolated Analog 8 Output Module 66
FLEX I/O Counter Modules 67
1794-IJ2 and 1794-IJ2XT 24V DC Input Frequency Module 69
1794-VHSC 2 Channel Very High Speed Counter Module 71
1794-ID2 2 Input Pulse Counter Module 73
1794-IP4 4 Input Pulse Counter Module 74

Section 1.4

Select a FLEX I/O Terminal Base Unit

General Specification Comparison 75

Section 1.5

Select a FLEX I/O Power Supply

Power Supply Definitions 77
Power Requirements and Transformer Sizing 78

Section 2.1

About the FLEX Ex I/O Systems

1797 FLEX Ex I/O Overview 81
Entity-Based Architecture 85
Hazardous Area Designation 85
Class Designation 85
Division/Zone Designations 85
Gas/Dust Groups 85
Specify a FLEX Ex System 87

Section 2.2

Select FLEX Ex I/O Communication Adapters and Distribution Method

1797-RPA ControlNet Ex Coax Drop Repeater Module 91
1797-RPFM ControlNet Ex 3 km Fiber Media Port Adapter 92
1797-BCNR Coax Barrier Module 92

Section 2.3

Select FLEX Ex I/O Modules

Digital I/O Modules 97
Features 97
Modules Specifications 98
1797-IBN16 16 Point Non-isolated NAMUR Input Module 98

1797-OB4D 24V DC 4 Point Non-isolated Source Output Module 99
Analog Modules 101
Module Specifications 102
1797-IE8, 1797-IE8H (HART), and 1797-IE8NF (with Noise Filter) 8 Point 16-bit Single-ended Non-isolated Analog Input Modules 102
1797-IRT8 8 Point 16-bit Non-isolated RTD Thermocouple/mV Input Module 104
HART Interface Modules 105
FLEX Ex I/O Analog Output Modules 106
1797-OE8 and 1797-OE8H (HART) 8 Point 13-bit Single-ended Non-isolated Analog 8 Output Module 106
Counter I/O Module 108
1797-IJ2 2 Input Frequency Counter Module 108

Section 2.4

Select a FLEX Ex I/O Terminal Base Unit

Terminal Base Wiring Diagrams 111
1797-TB3 and 1797-TB3S 111

Section 2.5

Select a FLEX Ex I/O Power Supply

E Type Power Supply 114
N Type Power Supply 114
Understanding System Planning 114
Assigning Power Supplies 116
Hazardous Area Installation 117
1797-PS1N and 1797-PS1E 85V...253V AC In/Quad-Ex DC Out 118
1797-PS2N2 and 1797-PS2E2 24V DC In/Quad-Ex DC Out 118

Section 3.1

Mount the FLEX System

Section 3.2

Select Optional Accessories

1794-CE1 and 1794-CE3 Extender Cables 123
1794-NM1 FLEX I/O Mounting Kit 123
1492-EA35 DIN Rail Locks 124
1794-LBL FLEX I/O Label Kit 124
1794-N2 FLEX I/O Dummy Filler Module 124
1794-CJC2 124
1797-BOOT ControlNet BNC Boot 125
1797-INS Trunk Insulator and 1797-EXMK Marking Kit 125
ControlNet Ex Taps 126

Related Documentation

Section 4.1

FLEX I/O and FLEX I/O-XT 129
FLEX Ex I/O 134

This manual contains new and updated information. Changes throughout this revision are marked by change bars, as shown to the right of this paragraph.

New and Updated Information

This table contains the additions made to this revision.

Topic	Page
Added temperature, operating data to all 1794 product sections and corrected Operating Temperature information from 185 °F to 158 °F	Chapters 1, 2, 3, and 7
Updated general FLEX I/O and FLEX I/O-XT specifications table	11
Updated table on discontinued catalogs	16
Corrected 1794-OB1D module type information	25
Updated analog I/O module summary table	45
Updated FLEX I/O Analog input comparison table	46
Added new section for 1794-IF4ICFXT	50
Updated Common Terminal Base Characteristics table	75
Updated general specifications comparison table for each FLEX I/O terminal base unit	75
Updated 1794 FLEX I/O and FLEX IO-XT related publications table	129
Updated 1797 FLEX Ex I/O related publications table	134

Notes:

About the FLEX I/O and FLEX Ex I/O Systems

1794 FLEX I/O Overview

FLEX™ I/O offers:

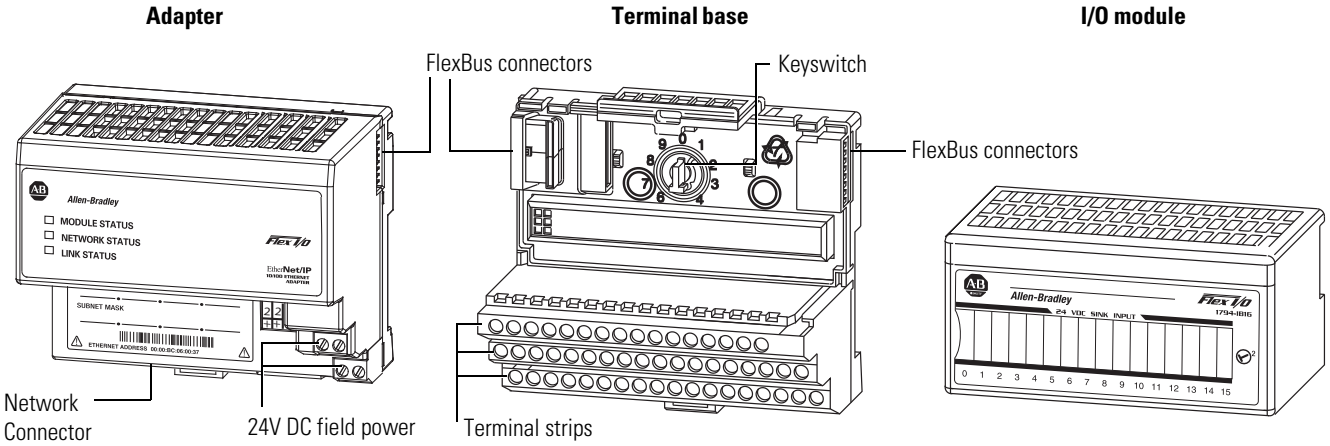

FLEX I/O is a Distributed I/O System that connects to several Networks including EtherNet/IP™, ControlNet®, and DeviceNet®.

Flexible, low-cost, modular I/O for distributed applications. FLEX I/O offers all the functions of larger, rack-based I/O without the space requirements.

Independently select the I/O, termination style, and network to meet your application needs.

Two separate connection terminals for field power let you daisy chain power connections to adjacent terminal bases.

One adapter communicates with up to eight I/O modules. Allows connection to:

- 256 digital input/output points, or
- 96 analog input/output points, or
- mix of I/O to meet your needs.

Modularity of FLEX I/O system provides choice of network and ease of expansion. The wiring terminations are done almost entirely on the terminal base. Terminal base termination selection includes screw-clamp, spring-clamp, and cage-clamp to wire directly to 2-, 3-, or 4-wire devices. Additional options of D-shell, knife disconnect, and fused terminal bases are available.

Adjustable keyswitch helps prevent incorrect module insertion into a preconfigured terminal base.

Terminal bases can be exchanged without moving other bases in your system.

If desired, connect individual power supplies to each base to isolate modules. Plug the I/O module into the terminal base to connect the I/O bus and field devices.

Remove and insert modules under power. No direct wiring to the module enables you to change modules without disturbing field wiring or system power.

Mix and match I/O modules. There is a wide variety of digital, analog, and specialty modules.

Each FLEX I/O system contains at least one adapter, one terminal base, and one I/O module.

You can power the system with a FLEX power supply (1794-PS13 or -PS3), a 1606 switched mode power supply, or any other compatible power source. Use the terminal block on the terminal base to wire your field devices directly. Wiring directly saves you:

- installation and testing time
- multiple, long wiring runs and external terminal blocks
- control cabinet panel space

FLEX I/O provides additional savings if system problems develop. Combining your field-wiring terminations and the I/O interface into the same location saves you time and money by making your system easier to maintain and troubleshoot. Additionally, the full-featured FLEX I/O system lets you, in non-hazardous location, remove, and insert modules under backplane power without disrupting your system.

Your FLEX I/O system can communicate on EtherNet/IP, ControlNet, DeviceNet, and many other open networks including, but not limited, to Remote I/O and PROFIBUS DP.

Adapters and other components are available for adding to your system as your specific application requirements change.

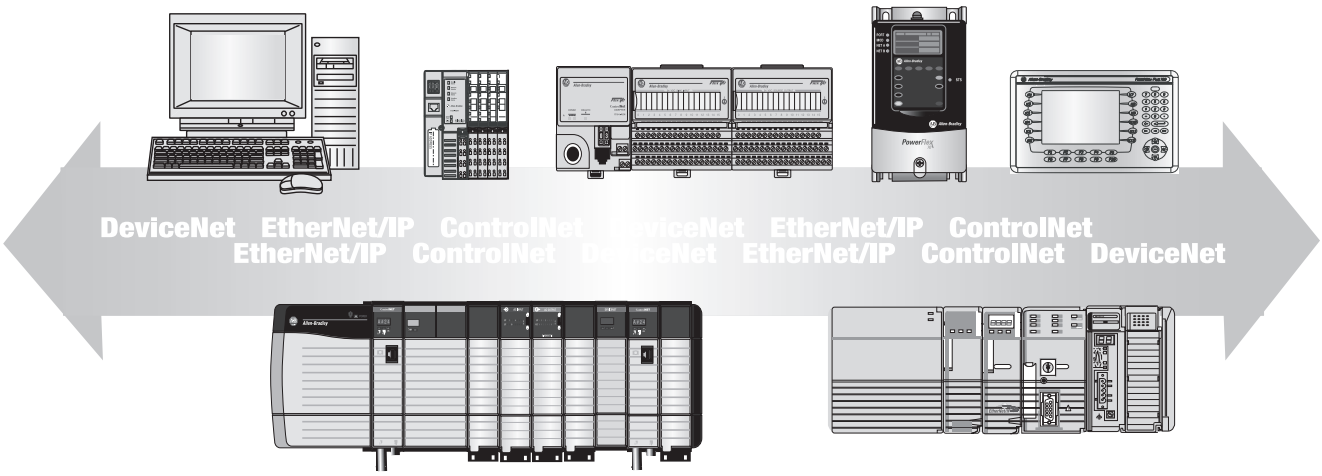

1794 FLEX I/O XT Overview

FLEX I/O-XT™ modules are designated for extreme environment use.

They differ from their non-XT counterparts only in operational temperature ranges and conformal coating is standard for FLEX I/O-XT products.

FLEX I/O-XT modules meet or exceed the following standards:

- ANSI / ISA-S71.04-1985; Class G1, G2, and G3 Environments
- CEI IEC 6065A-4; Class 1 and 2 Environments
- UL 746E
- MIL-1-46058C to ASTM-G21; (Tropicalization and fungicide)

These standards specify common emissions and classify their concentration levels in a number of industrial processes. Just a few of the common reactive agents that the FLEX I/O-XT modules protect against are:

- H2S – Hydrogen sulfide
- SO2, SO3 – Sulfur dioxide
- CnHn – Hydrocarbons
- NOx – Oxides of nitrogen
- CI2 – Wet Chlorine / Dry Chlorine
- NH3 – Ammonia

General FLEX I/O and FLEX I/O XT Specifications

The following table shows the similarities and differences between the FLEX I/O and the FLEX I/O-XT specifications.

Specifications Comparison

Attribute[1]	1794 FLEX I/O	1794 FLEX I/O XT
Temperature, operating[2]	0…55 °C (32…131 °F)	-20...+70 °C (-4....+158 °F)
Temperature, nonoperating	-40…+85 °C (-40…+185 °F)	-40...+85 °C (-40...+185 °F)
Relative humidity	5…95% noncondensing	
Shock, operating[3]	30 g peak acceleration, 11 (±1) ms pulse width	
Shock, nonoperating[1]	50 g peak acceleration, 11 (±1) ms pulse width	
Vibration	Tested 5 g @ 10…500 Hz per IEC 68-2-6	
Wire size	0.34 mm^2…2.5 mm^2 (22…12 AWG) stranded copper wire rated at 75 °C or higher 1.2 mm (3/64 in.) insulation max	
Atmospheric protection[4]	non-conformal coated	conformal coated to meet or exceed the following standards: • ANSI / ISA-S71.04-1985; Class G1, G2, and G3 Environments • CEI IEC 6065A-4; Class 1 and 2 Environments • UL 746E • MIL-1-46058C to ASTM-G21; (Tropicalization and fungicide)

Specifications Comparison

Attribute[1]	1794 FLEX I/O	1794 FLEX I/O XT
Certifications (when product is marked)[5]	• UL Listed Industrial Control Equipment • UL Listed for Class I, Division 2 Groups A, B, C, D Hazardous Locations • CE Marked for all applicable directives • CE / ATEX • CSA Certified Process Control Equipment for Class I, Division 2 Group A, B, C, D Hazardous Locations • RCM Marked for all applicable acts • KCC • Marine Certification • SIL 2 Certification • ODVA • ControlNet	

(1) For all other product-specific specifications, including environmental and certification, see the product sections within this Selection Guide.

(2) Operating temperature may vary per catalog. Refer to the product sections within this selection guide for catalog-specific information.

(3) To maintain these specifications, you must use DIN rail locks.

(4) General specifications does not apply to catalogs that are conformal coated but non-XT modules. Refer to the respective technical data sheet for module-specific data.

(5) See the Product Certification website, http://www.rockwellautomation.com/global/certification/overview.page for Declarations of Conformity, Certificates, and other certification details.

Specify a FLEX I/O or FLEX I/O XT System

Follow these steps as you specify your FLEX I/O or FLEX I/O XT system:

?	Step	See	Page
	1 Select a communication adapter Choose the network for your operating system.	CIP Network Infrastructure Select a Network	15 16
	2 Select I/O modules based on field device • location of the device • your application • number of points needed • number of points available per module • number of modules Or use the Integrated Architecture® Builder tool at http://www.rockwellautomation.com/en/e-tools/configuration.html	Digital I/O Modules FLEX I/O Analog, Thermocouple and RTD Modules FLEX I/O Counter Modules	23 44 67
	3 Select a terminal base Choose an appropriate terminal base for your modules.	General Specification Comparison	75
	4 Choose appropriate power supplies • Choose appropriate power supply • Ensure sufficient power for the communication adapter and modules	Power Supply Definitions Power Requirements and Transformer Sizing	77 78
	5 Determine mounting requirements and select accessories • Determine whether to panel mount or DIN rail mount the FLEX I/O system and at what orientation (horizontal or vertical) • Choose appropriate optional accessories to enhance your system	panel mount or DIN rail mount 1794-CE1 and 1794-CE3 Extender Cables 1794-NM1 FLEX I/O Mounting Kit 1492-EA35 DIN Rail Locks 1794-LBL FLEX I/O Label Kit	121 123 123 124 124

Notes:

Select FLEX I/O Communication Adapters

Step 1 – Select:

a communication adapter based on the appropriate network

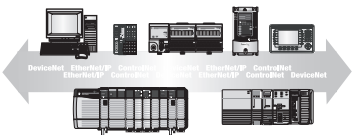

A FLEX I/O adapter module interfaces FLEX I/O modules to an I/O scanner port across a communication network. The FLEX I/O adapter module contains a built-in power supply that converts 24V DC to 5V DC for the backplane to power the FLEX I/O modules.

- Your 1794 FLEX I/O system can communicate on:
- EtherNet/IP
- ControlNet, single media or redundant
- DeviceNet
- Many other open networks including, Remote I/O, PROFIBUS DP, and others from Encompass partners

CIP Network Infrastructure

The Common Industrial Protocol (CIP™) allows complete integration of control with information, multiple CIP networks, and standard Internet technologies. CIP provides manufacturers with a scalable and coherent architecture incorporating discrete, process, safety, synchronization and motion applications using the same network technology as the ERP, MES enterprise levels applications. Ultimately, network convergence helps align technology with business goals for business process transformation and enterprise-wide visibility.

The following networks share the Common Industrial Protocol at their upper levels, while remaining media independent at their lower levels. This allows manufacturers to specify the best network for their application and eliminate costly and complex gateways when connecting dissimilar upper level networks.

- EtherNet/IP is an open industrial networking standard that supports implicit and explicit messaging and uses commercial, off-the-shelf Ethernet equipment and physical media.
- ControlNet allows intelligent, high-speed control devices to share the information required for supervisory control, work-cell coordination, operator interface, remote device configuration, programming, and troubleshooting.
- DeviceNet offers high-speed access to plant-floor data from a broad range of plant floor devices and a significant reduction in wiring.

Select a Network

You can configure your system for information exchange between a range of field devices and a specific scanner. You select the communication adapters for the networks that meet your needs:

Network Comparison by Application Requirement

Application Requirements	Network[1]	Communication Adapter
• Plant management (material handling) • Configuration, data collection, and control on a single, high-speed network • Time-critical applications with no established schedule • Data sent regularly • Internet/Intranet connection • Built-in switch, or high availability requirement (2-port AENTR)	EtherNet/IP	1794-AENT 1794-AENTR 1794-AENTRXT
• High-speed transfer of time-critical data between controllers and I/O devices • Deterministic and repeatable data delivery • Media redundancy	ControlNet	1794-ACN15 1794-ACN15K[2][3] 1794-ACNR15[4] 1794-ACNR15XT[5]
• Connections of low-level devices to plant floor controllers • More diagnostics for improved data collection and fault detection • Less wiring and reduced startup time than a traditional, hard-wired system	DeviceNet	1794-ADN 1794-ADNK
• Connections to Remote I/O networks	Remote I/O	1794-ASB[3] 1794-ASB2[3]
• Connection to PROFIBUS DP and DPV1 networks	PROFIBUS DP PROFIBUS DPV1	1794-APB[3] 1794-APBDPV1

(1) Communication adapters and other components are available for adding to your system as your specific application requirements change. For more information, go to www.rockwellautomation.com/encompass and search for products under the FLEX I/O platform.

(2) Modules that have the letter K in the last position of the catalog number, before the series designation, refer to conformal coated versions of the standard modules. These modules meet the following certifications: ANSI / ISA-S71.04-1985, Class G1, G2, and G3 environments; CEI IEC 6065A-4 Class 1 and 2 environments; UL 746E.

(3) Discontinued catalogs may not have updated specifications. For more information about a specific discontinued catalog, refer to individual installation instructions.

(4) Modules that have the letter R in the catalog number, before the series designation, refer to redundancy versions of the standard modules and are meant for redundancy networks.

(5) Modules that have the letters XT in the catalog number, before the series designation, refer to extended temperatures version of the standard modules.

EtherNet/IP Network

EtherNet/IP is a network suitable for use in industrial environment and time-critical applications. EtherNet/IP uses standard Ethernet and TCP/IP technologies and an open application layer protocol called the Control and Information Protocol (CIP). CIP is also the application layer used in DeviceNet and ControlNet networks. The open Application Layer protocol makes interoperability and interchangeability of industrial automation and control devices on EtherNet/IP a reality for automation and control applications.

The 1794-AENT and 1794-AENTR connect FLEX I/O to Ethernet/IP enabled controllers such as ControlLogix® or CompactLogix™.

Figure 1 - EtherNet/IP Communication

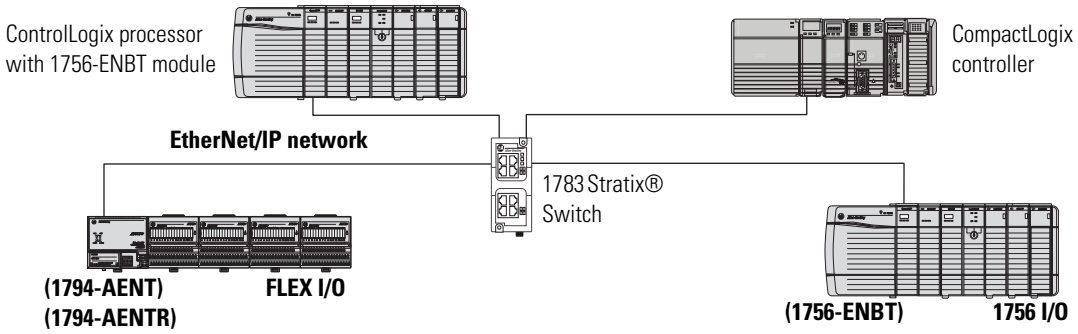

FLEX I/O EtherNet/IP Adapter Specifications

Attribute	1794-AENT	1794-AENTR	1794-AENTRXT
I/O module capacity	8		
Communication rate	10/100 Mbps		
Power consumption at 24V DC	9.6 W	9.3 W	
Power dissipation, max	7.3 W @ 19.2V DC	7.1 W @ 19.2V DC	6.1 W @ 19.2V DC
Thermal dissipation	24.9 BTU/hr @ 24V DC	24.2 BTU/hr @ 24V DC	20.8 BTU/hr @ 24V DC
Power supply 24V current load	450 mA	400 mA @ 24V DC 500 mA max	
Power supply input voltage, nom	24V DC		
Operating voltage range	19.2…31.2V DC (includes 5% AC ripple)		
Ethernet interface	1 – RJ45 category 5	2 – RJ45 category 5	
Dimensions (HxWxD), approx	87 x 94 x 69 mm 3.4 x 3.7 x 2.7 in.	87 x 94 x 92 mm 3.44 x 3.7 x 3.6 in.	
Temperature, operating	0…55 °C (32…131 °F)		-25…+70 °C (-13…+158 °F)

Device Level Ring Topology

A DLR network is a single-fault tolerant ring network intended for the interconnection of automation devices. FLEX I/O modules can connect to a DLR network using EtherNet/IP taps. The following is an illustration of how FLEX I/O systems can be integrated into a DLR topology.

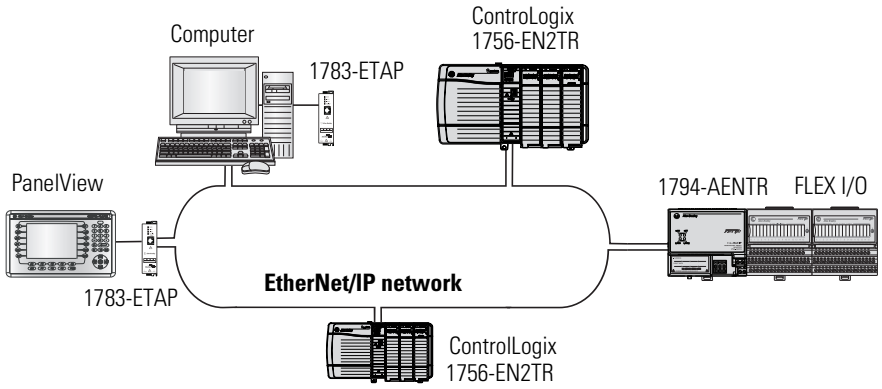

ControlNet Network

ControlNet is a real-time control network that provides high-speed transport of both time-critical I/O and interlocking data and messaging data, including upload/download of programming and configuration data on a single physical media link. The ControlNet network's highly efficient data transfer capability significantly enhances I/O performance and peer-to-peer communication in any system or application where it is used.

The 1794-ACNR15 adapter is capable of accepting redundant ControlNet cable media. The 1794-ACN15 is a non-redundant version.

The following diagram shows the FLEX I/O platform on a ControlNet network.

Figure 2 - ControlNet Communication

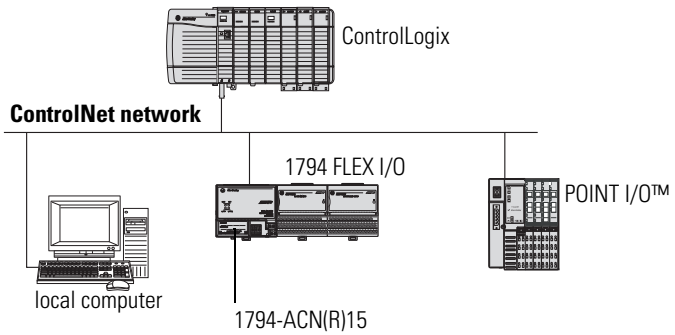

FLEX I/O ControlNet Adapter Specifications

Attribute	1794-ACN15, 1794-ACN15K(1), 1794-ACNR15, 1794-ACNR15XT
I/O module capacity	8
Communication rate	5 Mbps
Power consumption at 24V	7.9 W
Inrush current at 24V	23 A for 2 ms
Power dissipation, max	4.6 W @ 19.2V DC
Thermal dissipation	15.7 BTU/hr @ 19.2V DC
Power supply 24V current load	330 mA
Power supply 24V output current, max	450 mA
Power supply input voltage, nom	24V DC
Operating voltage range	19.2…31.2V DC (includes 5% AC ripple)
ControlNet cable	Allen-Bradley RG-6/U Quad shield coax, part no. 1786-RG6 (standard-PVC CM-CL2) or 1786-RG6F/A (high-flex)
Isolation voltage	Tested @ 850V DC for 1 s, user power to system
Dimensions (HxWxD), approx	87 x 94 x 92 mm 3.4 x 3.7 x 3.6 in.
Temperature, operating	-20…+55 °C (-4…+131 °F) -25…+70 °C (-13…+158 °F) – **1794-ACNR15XT only**

(1) Discontinued catalogs may not have updated specifications. For more information about a specific discontinued catalog, refer to individual installation instructions.

DeviceNet Network

The DeviceNet network is an open low-level network that provides connections between simple industrial devices (such as sensors and actuators) and higher-level devices (such as PLCs and computers). The DeviceNet network uses the proven Common Industrial Protocol (CIP) to provide the control, configure, and data collection capabilities for industrial devices. The DeviceNet network is a flexible network that works with devices from multiple vendors.

The following illustration shows the FLEX I/O platform on a DeviceNet network.

DeviceNet Communication

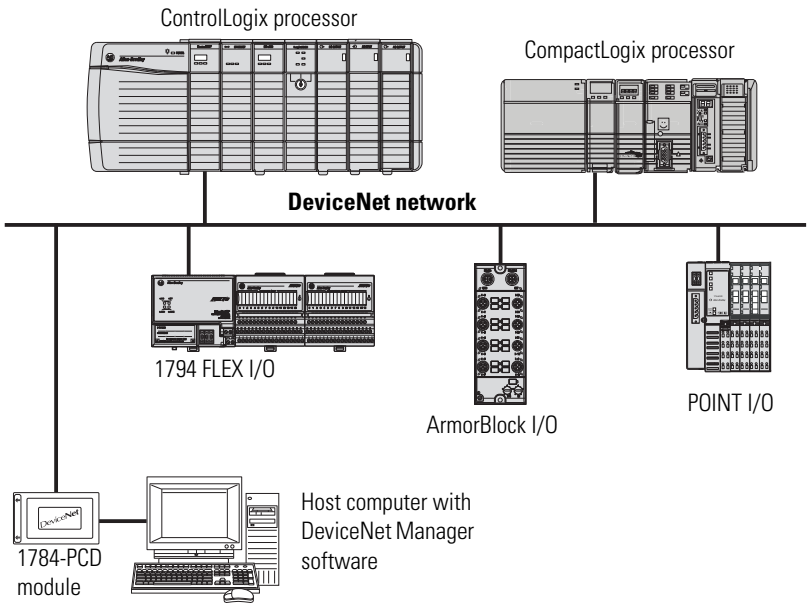

FLEX I/O DeviceNet Adapter Specifications

Attribute	1794-ADN, 1794-ADNK
I/O module capacity	8
Communication rate	125 Kbps 250 Kbps 500 Kbps
Power consumption at 24V	7.9 W
Inrush current at 24V	23 A for 2 ms
Power dissipation, max	4.6 W @ 19.2V DC
Thermal dissipation	15.7 BTU/hr @ 19.2V DC
Power supply 24V current load	330 mA
Power supply 24V output current, max	450 mA
Power supply input voltage, nom	24V DC
Operating voltage range	19.2…31.2V DC (includes 5% AC ripple)
DeviceNet cable	Allen-Bradley part no. 1485C-P1-Cxxx. See publication DNET-UM072 for more information. Extended Local Cable: 1794-CE1 (0.3 m) or 1794-CE3 (0.9 m)
Isolation voltage	Tested @ 850V DC for 1 s, user power to system
Dimensions (HxWxD), approx	87 x 68 x 69 mm 3.4 x 2.7 x 2.7 in.
Temperature, operating	-20…+70 °C (-4…+158 °F)

Other Networks – Remote I/O

The 1794-ASB and 1794-ASB2 adapters provide connection to the Remote I/O network.

The 1794-ASB2 supports only two FLEX I/O modules. The 1794-ASBLT is only for use with classic PLC 5/15 or PLC 5/25 processors.

ATTENTION: Do not use these Remote I/O adapters with the Classic PLC-5/15 or PLC-5/25 processors. Improper operation of the remote I/O may result.

- 1794-ASB, Series E
- 1794-ASB2, Series D
- 1794-ASB2K, Series D

Other Network Communication

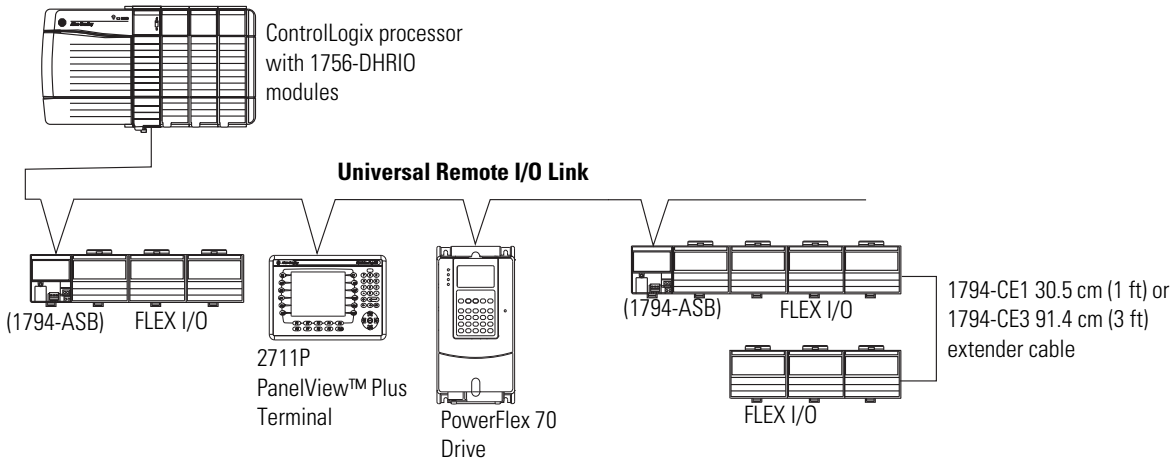

FLEX I/O Remote I/O Adapter Specifications

Attribute	1794-ASB[1], 1794-ASBLT[1][2]	1794-ASB2[1]
I/O module capacity	8	2
Communication rate	57.6 Kbps 115.2 Kbps 230.4 Kbps	
Power consumption at 24V	7.9 W	4.2 W
Inrush current at 24V	23 A for 2 ms	
Power dissipation, max	4.6 W @ 19.2V DC	3.4 W @ 19.2V DC
Thermal dissipation	15.7 BTU/hr @ 19.2V DC	11.6 BTU/hr @ 19.2V DC
Power supply 24V current load	330 mA	175 mA
Power supply input voltage, nom	24V DC	
Operating voltage range	19.2…31.2V DC (includes 5% AC ripple)	

FLEX I/O Remote I/O Adapter Specifications

Attribute	1794-ASB[1], 1794-ASBLT[1][2]	1794-ASB2[1]
DeviceNet cable	Remote I/O: Belden 9463 or equivalent as specified in Allen-Bradley Approved Vendor List, publication ICCG-2.2 Allen-Bradley pin connector part no. 942029-03	
Isolation voltage	Tested @ 850V DC for 1 s, user power to system	
Dimensions (HxWxD), approx	87 x 68 x 69 mm 3.4 x 2.7 x 2.7 in.	
Temperature, operating	-20…+55 °C (-4…+131 °F)	

(1) Discontinued catalogs may not have updated specifications. For more information about a specific discontinued catalog, refer to individual installation instructions.

(2) The 1794-ASBLT is only for use with Class PLC 5/15 or PLC 5/25 processors.

Other Networks – PROFIBUS DP

Use the 1794-APB or 1794-APBDPV1 adapter to connect to a PROFIBUS DP network.

FLEX I/O PROFIBUS I/O Adapter Specifications

Attribute	1794-APB[1]	1794-APBDPV1
I/O module capacity	8	
Communication rate	57.6 Kbps 115.2 Kbps 230.4 Kbps	All rates up to 12 Mbps
Power consumption at 24V	7.9 W	9.6 W
Inrush current at 24V	23 A for 2 ms	
Power dissipation, max	5.3 W @ 19.2V DC	4.2 W @ 19.2V DC
Thermal dissipation	17.9 BTU/hr @ 19.2V DC	14 BTU/hr @ 19.2V DC
Power supply 24V current load	450 mA	640 mA
Power supply input voltage, nom	24V DC	
Operating voltage range	19.2…31.2V DC (includes 5% AC ripple)	
PROFIBUS connector	9-pin D-shell; PROFIBUS standard drop cable	
Isolation voltage	Tested @ 850V DC for 1 s, user power to system	Tested @ 850V DC for 60 s, PROFIBUS to backplane to power
Dimensions (HxWxD), approx	87 x 68 x 69 mm 3.4 x 2.7 x 2.7 in.	
Temperature, operating	0…55 °C (32…131 °F)	

(1) Discontinued catalogs may not have updated specifications. For more information about a specific discontinued catalog, refer to individual installation instructions.

Our Encompass partners offer adapters for connecting to RS-232/422/485, Serial/DF1, and Modbus. For details, go to www.rockwellautomation.com/encompass/ and search for products under the platform FLEX I/O.

Select FLEX I/O Modules

Step 2 – Select:

I/O Modules

The FLEX I/O module plugs into the terminal base, connecting to the I/O bus and field devices. Since there is no direct wiring to the I/O module, you can remove and insert modules under backplane power, enabling you to change modules without disturbing field wiring, other I/O modules, or FLEX backplane power. This eliminates costly downtime and the inefficiencies of restarting a system.

The choices and flexibility you have with I/O types range from digital and analog to temperature and motion control. FLEX I/O allows you to use as many as eight terminal bases per adapter which can provide a maximum of 256 digital I/O points or 96 analog channels per adapter. You can mix and match digital and analog I/O with mounting and wiring options, supplying you with a successful distributed system solution.

This flexibility gives you the following choices of I/O signal types:

- Digital: AC and DC voltage signals
- Analog: current or voltage
- Relay: normally open, 2 A capability
- Protected outputs: non-latching, latching, and with diagnostics
- Temperature: thermocouple or RTD
- Motion: high-speed counters, flow metering, and totalization
- Combo modules: combination of input and output capability
- Harsh environments: use FLEX I/O XT in harsh environments
- Intrinsic Safety (IS): use FLEX Ex I/O in hazardous areas to connect to field devices

Digital I/O Modules

Digital I/O modules interface with field devices such as:

- pushbutton and limit switches
- on/off actuators such as motor starters, pilot lights, and annunciators
- Relay contacts

Features

Modules are available in different densities ranging from 8 to 32 points.

- Digital I/O modules cover a wide electrical range:

120V AC: Input/Output and Isolated Input/Output, 8 and 16 point

220V AC: Input/Output, 8 point

24V DC: Input/Output/Combination, Sink/Source, Protected, Electronically Fused, Diagnostic, 8, 16, and 32 point

48V DC: Sink Input/Source Output, 16 point

Relay: Sink/Source, 8 point

- Isolated inputs and outputs can be used in applications such as motor control centers where individual control transformers are used.
- Protected outputs (P) have electronic protection which acts to shut the output down in reaction to a short circuit, overload, or over-temperature condition.
  Recovery from shutdown is automatic upon removal of the output fault. No fault status is provided to the processor.
- Electronic Fused (EP) module acts to open the output when a fault occurs. The fuse can be reset by operating a pushbutton, via software, or by cycling the input power. Fault status is provided to the processor.
- Diagnostic (D) modules detect, indicate, and report to the processor the following faults:

  open input or output field devices or wiring

  shorted output field devices

  shorted input or output wiring

  reverse polarity of user supply wiring
- Selectable input filter times from <1...60 ms.
- LED for each channel indicating status of:

  corresponding input device

  output signal

Digital I/O Module Summary

Catalog Number	Inputs	Outputs	Terminal Base Unit	Electrical Range	Module Type
AC Modules					
1794-IA8	8	—	1794-TBN, 1794-TB2, 1794-TB3, 1794-TB3S, 1794-TBKD, 1794-TB3K, 1794-TB3SK, 1794-TBNK	120V AC	Nonisolated inputs
1794-IA8I					Isolated inputs
1794-IA16	16		1794-TB3, 1794-TB3S, 1794-TBN(1), 1794-TB3K, 1794-TB3SK, 1794-TBNK	120V AC	Nonisolated inputs
1794-IM8	8	—	1794-TBN, 1794-TBNK	240V AC	
1794-IM16	16				
1794-OA8	—	8	1794-TBNF, 1794-TB2, 1794-TB3, 1794-TB3S, 1794-TBN, 1794-TBKD, 1794-TB3K, 1794-TB3SK, 1794-TBNK	120V AC	Nonisolated outputs
1794-OA8I					Isolated outputs
1794-OA16		16	1794-TB3, 1794-TB2, 1794-TB3S,1794-TB3K 1794-TB3SK, 1794-TBN(1), 1794-TBKD, 1794-TBNK	120V AC	Nonisolated outputs
1794-OM8		8	1794-TBNF, 1794-TBN, 1794-TBNK	240V AC	
1794-OM16		16			

Digital I/O Module Summary

Catalog Number	Inputs	Outputs	Terminal Base Unit	Electrical Range	Module Type
DC Modules					
1794-IB8	8	—	1794-TB3, 1794-TB3S, 1794-TB3K, 1794-TB3SK	24V DC	Nonisolated inputs
1794-IB16	16	—			
1794-IB16D			1794-TB32, 1794-TB32S		Group isolated inputs Diagnostics
1794-IB16XT			1794-TB3, 1794-TB3S, 1794-TB3K, 1794-TB3SK		Nonisolated inputs Extended temperatures
1794-IB10XOB6	10	6	1794-TB2, 1794-TB3, 1794-TB3S, 1794-TB3K, 1794-TB3SK		Nonisolated I/O
1794-IB10XOB6XT					Nonisolated I/O Extended temperatures
1794-IB16XOB16P	16	16	1794-TB32, 1794-TB32S		Nonisolated I/O Protected outputs
1794-IC16		—	1794-TB3, 1794-TB3S, 1794-TB3K, 1794-TB3SK	48V DC	Nonisolated inputs
1794-IG16				5V DC	
1794-IH16				125V DC	
1794-IV16				24V DC	
1794-IB32	32		1794-TB32, 1794-TB32S		
1794-IV32					Nonisolated inputs with groups
1794-OB8	—	8	1794-TB2, 1794-TB3, 1794-TB3S, 1794-TB3K, 1794-TB3SK	24V DC	Nonisolated outputs
1794-OB8EP			1794-TB2, 1794-TB3, 1794-TB3S, 1794-TBN, 1794-TB3K, 1794-TB3SK, 1794-TBNK		Nonisolated, protected outputs
1794-OB8EPXT					Nonisolated, protected outputs Extended temperatures
1794-OB16	—	16	1794-TB2, 1794-TB3, 1794-TB3S, 1794-TB3K, 1794-TB3SK	24V DC	Nonisolated outputs
1794-OB16D					Nonisolated outputs Diagnostics
1794-OB16P			1794-TB2, 1794-TB3, 1794-TB3S, 1794-TBN, 1794-TB3K, 1794-TB3SK, 1794-TBNK		Nonisolated, protected outputs Conformal coated
1794-OB16PXT					Nonisolated, protected outputs Extended temperatures
1794-OB32P		32	1794-TB32, 1794-TB32S	24V DC	Nonisolated, protected outputs with groups

Digital I/O Module Summary

Catalog Number	Inputs	Outputs	Terminal Base Unit	Electrical Range	Module Type
1794-OC16	—	16	1794-TB3, 1794-TB3S, 1794-TB3K, 1794-TB3SK	48V DC	Nonisolated outputs
1794-OG16				5V DC	
1794-OV16				24V DC	
1794-OV16P					Nonisolated, protected outputs
1794-OV32		32	1794-TB32, 1794-TB32S		Nonisolated outputs in groups
Relay Modules					
1794-OW8	—	8	1794-TB2, 1794-TB3, 1794-TB3S, 1794-TBN, 1794-TBNF, 1794-TB3K, 1794-TB3SK, 1794-TBNK	24V DC	Isolated outputs Electromagnetic relays
1794-OW8XT					Isolated outputs Electromagnetic relays Extended temperatures

(1) Auxiliary terminal strips are required when using the 1794-TBN.

Select Input Filter Times for Digital Modules

Input filter times can be set to the following values (EtherNet/IP, ControlNet, and DeviceNet only).

Input Filter Times – AC Modules

Filter Times for Inputs	Maximum Times (ms)			
	OFF to ON		ON to OFF	
	1794-IA8, 1794-IA8I	1794-IA16, 1794-IM8	1794-IA8, 1794-IA8I	1794-IA16, 1794-IM8
Filter time 0 (default)	8.4(1)	7.5	26.4(2)	26.5
1	8.6	8	26.6	27
2	9	9	27	28
3	10	10	28	29
4	12	12	30	31
5	16	16	34	35
6	24	24.5	42	44
7	40	42	58	60.5

(1) OFF to ON filter is 8 ms.

(2) ON to OFF filter is 26 ms.

Input Filter Times – DC Modules

Filter Times for Inputs	Maximum Times (ms)
	OFF to ON and ON to OFF
	1794-IB8, 1794-IB16, 1794-IB32, 1794-IV16, 1794-IC16, 1794-IB10XOB6, 1794-IB16XOB16P
Filter time 0 (default)	0.25
1	0.5
2	1
3	2
4	4
5	8
6	16
7	32

Derating Curve

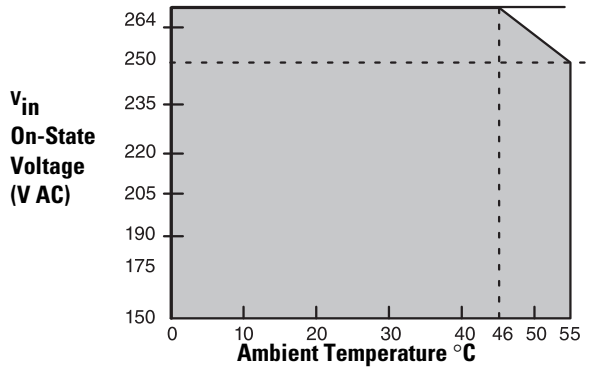

The area within the curve represents the safe operating range for the module under various conditions of user supplied 220V AC supply voltages and ambient temperatures.

= All mounting positions (including normal horizontal, vertical, inverted horizontal) safe operating range.

Modules Specifications

The following section shows more detailed module specifications in comparative groups to facilitate your selection based on your requirements.

FLEX I/O Digital AC Input Modules

Digital AC Input Comparison

Specification	1794-IA8, 1794-IA8I	1794-IA16	1794-IM8	1794-IM16
Voltage, on-state input, nom	120V AC[1]		240V AC	

Digital AC Input Comparison

Specification	1794-IA8, 1794-IA8I	1794-IA16	1794-IM8	1794-IM16
Terminal base unit	1794-TBN, 1794-TB2, 1794-TB3, 1794-TB3S, 1794-TBKD, 1794-TB3K, 1794-TB3SK, 1794-TBNK	1794-TB3, 1794-TB3S, 1794-TBN(2), 1794-TB3K, 1794-TB3SK, 1794-TBNK	1794-TBN, 1794-TBNK	
Current, on-state input, nom	12 mA @ 120V AC, 60 Hz		10 mA @ 240V AC, 60 Hz	11 mA @ 240V AC, 60 Hz
Input impedance, nom	10.6 kΩ	10 kΩ	22.3 kΩ	22.2 kΩ
Voltage, on-state input, min	65V AC	74V AC	159V AC	
Voltage, off-state input, max	43V AC	20V AC	40V AC	
Current, on-state input, min	7.1 mA	5.5 mA @ 74V AC, 47 Hz	5.3 mA @ 159V AC, 47 Hz	
Current, off-state input, max	2.9 mA		2.6 mA	
Power dissipation, max	4.5 W @ 132V AC	6.4 W @ 132V AC	4.7 W @ 264V AC	6 W @ 264V AC
Thermal dissipation, max	15.3 BTU/hr @ 132V AC	21.8 BTU/hr @ 132V AC	16.2 BTU/hr @ 264V AC	20.47 BTU/hr @ 264V AC
Dimensions (HxWxD)	46 x 94 x 53 mm (1.8 x 3.7 x 2.1 in.) 94 x 94 x 69 mm (3.7 x 3.7 x 2.7 in.) installed			
Isolation voltage	120V (continuous), Basic Insulation Type Type tested at 1250V AC (1240V for 1794-IA8I) for 60 s, between field side and system No isolation between individual channels Routine tested to 2150V DC for 1 s, between field side and system No isolation between individual channels	120V (continuous), Basic Insulation Type Type tested at 1264V AC for 60 s, between field side and system No isolation between individual channels Routine tested at 2150V DC for 1 s, between field side and system No isolation between individual channels	250V (continuous), Basic Insulation Type, field side to backplane No isolation between individual channels Type tested at 1250V AC for 60 s	
Temperature, operating	-20…+55 °C (-4…+131 °F)	0…55 °C (32…131 °F)	0…55 °C (32…131 °F)	

(1) 1794-IA8I – isolated voltage.

(2) Auxiliary terminal strips are required when using the 1794-TBN.

1794-IM8 Derating Curve

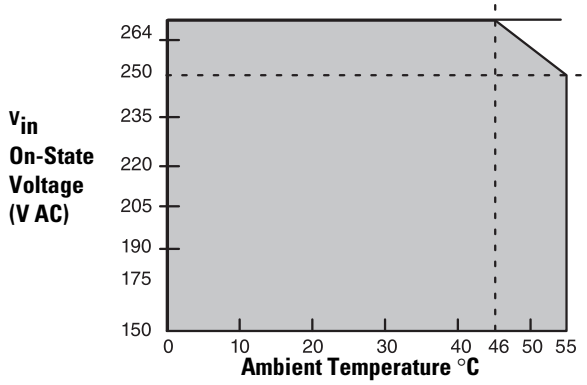

The area within the curve represents the safe operating range for the module under various conditions of user supplied 220V AC supply voltages and ambient temperatures.

= All mounting positions (including normal horizontal, vertical, inverted horizontal) safe operating range.

FLEX I/O Digital AC Output Modules

Digital AC Output Comparison

Specification	1794-OA8, 1794-OA8I	1794-OA16	1794-OM8	1794-OM16
Voltage, on-state output, nom	120V AC[2]		220V AC	240V AC
Terminal base unit	1794-TBN, 1794-TBNF, 1794-TB2, 1794-TB3, 1794-TB3S, 1794-TBKD, 1794-TBNK, 1794-TB3K, 1794-TB3SK	1794-TBN[4], 1794-TBNF, 1794-TB2, 1794-TB3S, 1794-TBKD, 1794-TBNK, 1794-TB3K, 1794-TB3SK	1794-TBN, 1794-TBNF, 1794-TBNK	
Current, on-state output, min	5 mA per output			
Current, on-state output, max	500 mA pre output @ 55 °C [3] 750 mA per output @ 35 °C 1.0 A on 4 nonadjacent outputs and 500 mA on the remaining 4 outputs @ 30 °C	500 mA per output @ 55 °C[5]	500 mA @ 55 °C[6]	
Current, on-state output, per module	4.0 A (8 outputs @ 500 mA)	4.0 A (16 outputs @ 250 mA)	4.0 A (8 outputs @ 500 mA)[5]	4.0 A (16 outputs @ 250 mA)
Leakage current, off-state output, max	2.25 mA		2.5 mA	
Voltage drop, on-state output, max	1.0V @ 0.5 A	1.5V @ 0.5 A		
Output surge current, max	7 A for 45 ms, repeatable every 8 s	7 A for 40 ms, repeatable every 8 s		
Voltage, on-state output, min[1]	85V AC		159V AC	
Voltage, on-state output, nom	120V AC		240V AC	
Voltage, on-state output, max	132V AC		264V AC	
Power dissipation, max	4.1 W @ 0.5 A 6.3 W @ 0.75 A 6.3 W @ 1.0 A	4.7 W @ 0.5 A	5 W @ 0.5 A	6 W @ 264V AC
Thermal dissipation, max	14.0 BTU/hr @ 0.5 A 21.1 BTU/hr @ 0.75 A 21.4 BTU/hr @ 1.0 A	16.1 BTU/hr @ 0.5 A	17.1 BTU/hr @ 0.5 A	20.47 BTU/hr @ 264V AC
Dimensions (HxWxD), approx	46 x 94 x 53 mm (1.8 x 3.7 x 2.1 in.) 94 x 94 x 69 mm (3.7 x 3.7 x 2.7 in.) installed			
Isolation voltage	120V (continuous), I/O to system (and channel to channel for 1794-OA8I) No isolation between individual channels Tested to 2150V DC for 1 s and 1250V AC for 60 s		Tested at 2600V DC for 1 s, I/O to system No isolation between individual channels	250V (continuous), Basic Insulation Type, field side to backplane No isolation between individual channels Type tested at 1250V AC for 60 s
Temperature, operating	-20…+55 °C (-4…+131 °F)	0…55 °C (32…131 °F)		

(1) The external AC supply voltage must be capable of a 50 A surge for 1/2 cycle at power-up.

(2) 1794-OA8I – isolated voltage

(3) sufficient to operate an A-B 500 NEMA size 3 motor starter

(4) Auxiliary terminal strips are required when using the 1794-TBN for the 1794-OA16.

(5) If using 0.5 A outputs, alternate wiring so that no two 0.5 A outputs are adjacent. See the 1794-OA16 Derating Curve for mounting other than the normal horizontal.

(6) See the 1794-OM8 Derating Curve.

IMPORTANT

- The output signal delay, OFF to ON or ON to OFF is 1/2 cycle maximum.
- Modules have a yellow status indicator for each channel. These indicators are driven from the logic-side circuitry.
- Module outputs are not fused. Fusing of individual outputs is required. If applicable, the 1794-TBNF is recommended, otherwise you must provide external fusing. The following fuses are recommended:
  - 1794-OA8, 1794-OA8I – Use 1.6 A, 250V Slow-Blow, Littelfuse (part number 23901.6); San-o SD6-1.6 A (AB part number 94171304). The 1794-TBNF comes with SD6-1.6 A fuses installed.
  - 1794-OA16 – Use 2.5 A, 150V MQ2 normal fuse.
  - 1794-OM8 – Use 0.8 A, 250V MQ4 normal fuse.

1794-OA16 Derating Curve

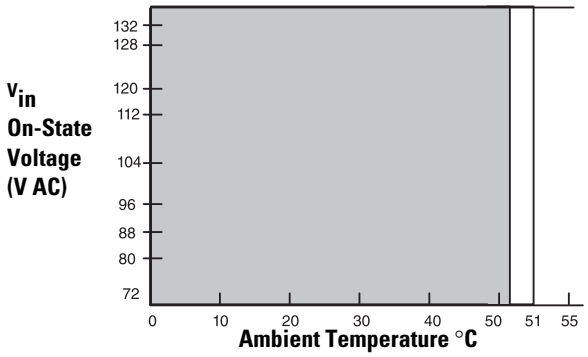

The area within the curve represents the safe operating range for the module under various conditions of user supplied 220V AC supply voltages and ambient temperatures.

□ = Normal mounting safe operating range ▭ included
▭ = Other mounting positions (including inverted horizontal, vertical) safe operating range

1794-OM8 Derating Curve

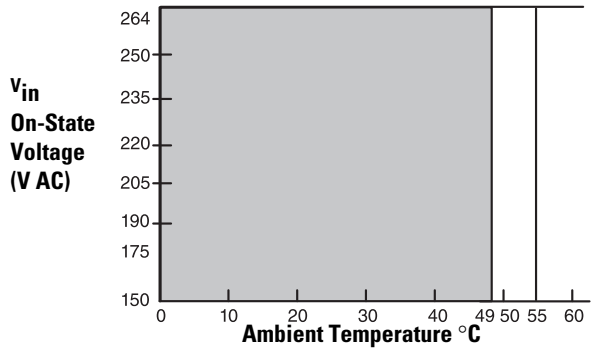

The area within the curve represents the safe operating range for the module under various conditions of user supplied 220V AC supply voltages and ambient temperatures.

= Normal mounting safe operating range included
= Other mounting positions (including inverted horizontal, vertical) safe operating range

FLEX I/O Digital DC Input Modules

Digital DC Input Comparison

Specification	1794-IB8, 1794-IB16, 1794-IB16XT	1794-IV16	1794-IB32	1794-IV32	1794-IC16	1794-IG16	1794-IH16
Voltage, on-state input, min	10V DC, sinking	10V DC, sourcing	19.2V DC, sinking	19.2V DC, sourcing	30V DC, sinking	-0.2V DC, TTL	90V DC, sinking
Voltage, on-state input, nom	24V DC				48V DC	0V DC	125V DC
Voltage, on-state input, max	31.2V DC				60V DC	0.8V DC	146V DC
Voltage, off-state input, max	5V DC				10V DC	2.0...5.5V DC	20V DC
Terminal base unit	1794-TB3, 1794-TB3S, 1794-TB3K, 1794-TB3SK	1794-TB3, 1794-TB3S, 1794-TB3K, 1794-TB3SK	1794-TB32, 1794-TB32S		1794-TB3, 1794-TB3S, 1794-TB3K, 1794-TB3SK		
Current, on-state input, min	2.0 mA					—	1.0 mA
Current, on-state input, nom	8 mA @ 24V DC		4.1 mA @ 24V DC	4.1 mA	5 mA @ 48V DC	—	2 mA @ 125V DC
Current, on-state input, max	**1794-IB16:** 12 mA **1794-IB8, 1794-IV16:** 11 mA **1794-IB16XT:** 5.0 mA		6 mA	6 mA	11 mA	—	3 mA
Current, off-state input, max	1.5 mA					4.1 mA	0.8 mA
Input impedance, max	4.6 kΩ	4.7 kΩ	6 kΩ		11 kΩ	—	60 kΩ
Power dissipation, max	**1794-IB8:** 3.5W @ 31.2V DC **1794-IB16:** 6.1W @ 31.2V DC **1794-IB16XT:** 2W @ 31.2V DC	5.7 W @ 31.2V DC	6.0 W @ 31.2V DC		6.4 W @ 60V DC	1.4 W @ 5.5V DC	6 W @ 146V DC
Thermal dissipation, max	**1794-IB8:** 11.9 BTU/hr @ 31.2V DC **1794-IB16:** 20.8 BTU/hr @ 31.2V DC **1794-IB16XT:** 6.8 BTU/hr @ 31.2V DC	19.4 BTU/hr @ 31.2V DC	20.5 BTU/hr @ 31.2V DC		21.9 BTU/hr @ 60V DC	4.78 BTU/hr @ 5.5V DC	20.47 BTU/hr @ 146V DC
Dimensions (HxWxD), approx	46 x 94 x 53 mm (1.8 x 3.7 x 2.1 in.) 94 x 94 x 69 mm (3.7 x 3.7 x 2.7 in.) installed						

Digital DC Input Comparison

Specification	1794-IB8, 1794-IB16, 1794-IB16XT	1794-IV16	1794-IB32	1794-IV32	1794-IC16	1794-IG16	1794-IH16
Isolation voltage	50V (continuous), Basic Insulation Type, between field side and system No isolation between individual channels **1794-IB8, 1794-IB16XT:** Type tested at 850V DC for 60 s **1794-IV16:** Type tested at 700V DC for 60 s **1794-IB32:** Routine tested at 2121V DC for 2 s **1794-IV32:** Type tested at 707V DC for 60 s **All other modules:** Type tested at 707V DC for 60 s				Tested at 1900V DC for 1 s, I/O to system No isolation between individual channels	50V (continuous), Basic Insulation Type, between field side and system No isolation between individual channels Type tested at 707V DC for 60 s	250V (continuous), Basic Insulation Type, between field side and system Type tested at 1706V DC for 60 s, between field side and system No isolation between individual channels
Temperature, operating	**1794-IB8, 1794-IB16:** -20…+55 °C (-4…+131 °F) **1794-IB16XT:** -20…+70 °C (-4…+158 °F)	-20…+55 °C (-4…+131 °F)	0…55 °C (32…131 °F)				

IMPORTANT

- Do not put the 1794-IB8 module next to an output module in 8-point compact addressing with the 1794-ASB2/C or 1794-ASB/D.
- Modules have a yellow status indicator for each channel. These indicators are driven from the customer field-side input device.

1794-IB16 Derating Curve

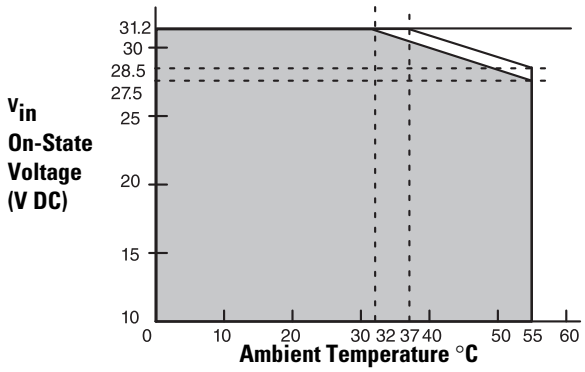

The area within the curve represents the safe operating range for the module under various conditions of user supplied 24V DC supply voltages and ambient temperatures.

□ = Normal mounting safe operating range ▭ included
▭ = Other mounting positions (including inverted horizontal, vertical) safe operating range

1794-IB32 Derating Curve

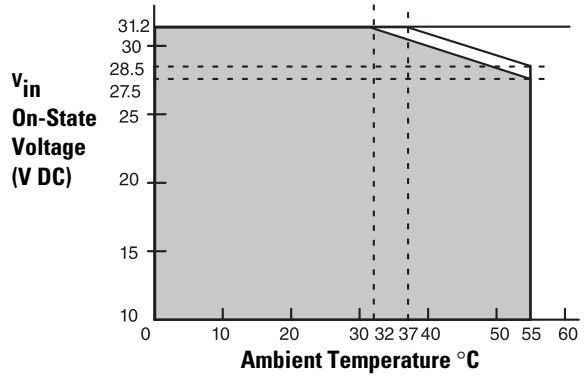

The area within the curve represents the safe operating range for the module under various conditions of user supplied 24V DC supply voltages and ambient temperatures.

□ = Normal mounting safe operating range ▭ included
▭ = Other mounting positions (including inverted horizontal, vertical) safe operating range

1794-IC16 Derating Curve

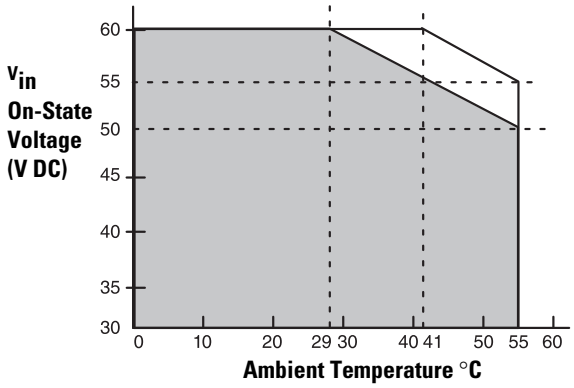

The area within the curve represents the safe operating range for the module under various conditions of user supplied 48V DC supply voltages and ambient temperature.

□ = Normal mounting safe operating range ▭ included
▭ = Other mounting positions (including inverted horizontal) safe operating range

FLEX I/O Digital DC Output Modules

- 1794-OB8 and 1794-OB16 provide 16 sourcing 1/2 Amp outputs (8 for the 1794-OB8) over a wide 10...31.2V DC input voltage range.
- 1794-OV16 is the sinking version of the 1794-OB16.
- 1794-OV32 is the 32 output version of the 1794-OV16.
- 1794-OC16 is the 48V DC version of the 1794-OB16.
- These modules are not fused. External fusing is strongly recommended or use protected output modules. Module outputs are not fused. Fusing of outputs is recommended. If fusing is desired, you must provide external fusing.

  For 1794-OB8, 1794-OB16, and 1794-OV16 use SAN-O MQ4-800 mA fuse.

  For 1794-OC16 use 2 A, 150V AC MQ2 normal fuse.

Digital DC Output Comparison

Specification	1794-OB8	1794-OB16	1794-OV16	1794-OV32	1794-OG16	1794-OC16
Voltage, on-state output, nom	24V DC, sourcing		24V DC, sinking		0V DC	48V DC, sourcing
Voltage, on-state output, min	10V DC				0V DC	30V DC
Voltage, on-state input, max	31.2V DC				0.4V DC	60V DC @ 45 °C 55V DC @ 55 °C
Voltage drop, on-state output, max	0.5V DC		0.2V DC		—	1.0V DC @ 0.5 A
Terminal base unit	1794-TB2, 1794-TB3, 1794-TB3S, 1794-TB3K, 1794-TB3SK		1794-TB3, 1794-TB3S, 1794-TB3K, 1794-TB3SK			1794-TB2, 1794-TB3, 1794-TB3S, 1794-TB3K, 1794-TB3SK
Current, on-state output, min	1.0 mA per channel				0.15 mA per channel	2.0 mA per channel
Current, off-state output, max	500 mA per channel 4 A per module	500 mA per channel 8 A per module		500 mA	24.0 mA per channel	500 mA per channel 8 A per module
Leakage current, off-state output, max	0.5 mA				1 mA	1.0 mA
Output surge current, max	2 A for 50 ms, repeatable every 2 s				—	4 A for 10 ms, repeatable every 2 s
Output delay time, OFF to ON, max	0.5 ms				0.25 ms	0.5 ms(1)
Output delay time, ON to OFF, max	1.0 ms				0.5 ms	1.0 ms @ 25 °C 2.0 ms @ 55 °C(2)
External DC supply voltage range	10…31.2V DC (5% ripple)				4.5...5.5V DC (includes 50 mV p-p ripple)	30…60V DC (5% ripple)
External DC supply current range	10…35 mA	20…65 mA		50 mA	100 mA @ 5V DC	13…27 mA
Power dissipation, max	3.3 W @ 31.2V DC	5.3 W @ 31.2V DC	4.2 W @ 31.2V DC	4.4 W @ 31.2V DC	0.8 W @ 5.5V DC	3.7 W @ 60V DC
Thermal dissipation, max	11.2 BTU/hr @31.2V DC	18.1 BTU/hr @31.2V DC	14.3 BTU/hr @ 31.2V DC	8.53 BTU/hr @ 31.2V DC	3.41 BTU/hr @ 5.5V DC	12.6 BTU/hr @ 60V DC
Dimensions (HxWxD), approx	46 x 94 x 53 mm (1.8 x 3.7 x 2.1 in.) 94 x 94 x 69 mm (3.7 x 3.7 x 2.7 in.) installed					
Isolation voltage	50V continuous, I/O to system Tested to 850V DC for 1 s, I/O to system No isolation between individual channels		50V continuous Tested 1770V DC for 60 s, I/O to system No isolation between individual channels	50V (continuous), Basic Insulation Type, between field side and system Type tested at 707V DC for 60 s, between field side and system No isolation between individual channels		75V continuous, I/O to system Tested to 1900V DC for 1 s, I/O to system (No isolation between individual channels)
Temperature, operating	-20…+55 °C (-4…+131 °F)		-20…+55 °C (-4…+131 °F)	0…55 °C (32…131 °F)		

(1) OFF to ON delay is the time from a valid output ON signal to output energization. ON to OFF delay is the time from a valid output OFF signal to output de-energization.

FLEX I/O Digital DC Protected Output Modules

- 1794-OB16P provides 16 sourcing 1/2 Amp outputs self-protected against shorts, overloads, and over temperature. The faulted output will automatically return when the fault is removed. No feedback to the processor is provided.
- 1794-OB16PXT is the extended temperature version of the 1794-OB16P module. The module is conformal coated.
- 1794-OB8EP provides 8 sourcing 2 Amp outputs with electronic fuse type of overload protection, which opens when overloaded. The fuse can be 'reset' several ways. Fault status is provided to the processor.
- 1794-OB8EPXT is the extended temperature version of the 1794-OB8EP module. The module is conformal coated.
- 1794-OB32P provides 32 self-protected sourcing 1/2 Amp outputs in 2 groups of 16 outputs. Separate voltage sources can be used with each group.
- 1794-OV16P is the sinking version of the 1794-OB16P.

Digital DC Protected Output Comparison

Specification	1794-OB16P, 1794-OB16PXT	1794-OB8EP, 1794-OB8EPXT	1794-OB32P	1794-OV16P
Voltage, on-state output, nom	24V DC, sourcing			24V DC, sinking
Voltage, on-state output, min	10V DC	19V.2 DC	10V DC	
Voltage, on-state output, max	31.2V DC[1]	31.2V DC		
Voltage drop, on-state output, max	0.5V DC	0.2V DC	0.5V DC	0.2V DC
Terminal base unit	1794-TB2, 1794-TB3, 1794-TB3S, 1794-TB3K, 1794-TB3SK	1794-TB2, 1794-TB3, 1794-TB3S, 1794-TBN, 1794-TB3K, 1794-TB3SK, 1794-TBNK	1794-TB32, 1794-TB32S	1794-TB3, 1794-TB3S, 1794-TB3K, 1794-TB3SK
Current on-state output, min	1.0 mA per channel			
Current, on-state output, max	500 mA per channel, 8 A per module	2.0 A per channel, 10 A per module	500 mA per channel, 14 A per module[2]	500 mA per channel, 8 A per module
Leakage current, off-state output, max	0.5 mA			
Output surge current, max	1.5 A for 50 ms, repeatable every 2 s	4 A for 50 ms, repeatable every 3 s	2 A for 50 ms, repeatable every 2 s	
Output delay time, OFF to ON, max	0.5 ms	0.1 ms	0.5 ms	
Output delay time, ON to OFF, max	1.0 ms	0.1 ms	1.0 ms	
External DC supply voltage range	10…31.2V DC (5% AC ripple)	19.2…31.2V DC (5% AC ripple)	10…31.2V DC (5% AC ripple)	
External DC supply current range	25…75 mA	20…35 mA	103…273 mA	20…65 mA
Power dissipation, max	5.0 W @ 31.2V DC	5.5 W @ 31.2V DC	5.3 W @ 31.2V DC	4.2 W @ 31.2V DC
Thermal dissipation, max	17.0 BTU/hr @ 31.2V DC	18.8 BTU/hr @ 31.2V DC	18.1 BTU/hr @ 31.2V DC	14.3 BTU/hr @ 31.2V DC
Dimensions (HxWxD), approx	46 x 94 x 53 mm (1.8 x 3.7 x 2.1 in.) 94 x 94 x 69 mm (3.7 x 3.7 x 2.7 in.) installed			

Digital DC Protected Output Comparison

Specification	1794-OB16P, 1794-OB16PXT	1794-OB8EP, 1794-OB8EPXT	1794-OB32P	1794-OV16P
Isolation voltage	50V (continuous), Basic Insulation Type Type tested at 2121V DC for 60 s, between field side and system No isolation between individual channels	50V (continuous), Basic Insulation Type Type tested at 850V DC for 60 s, between field side and system **1794-OB8EPXT:** Type tested at 1500V AC for 60 s, between field side and system No isolation between individual channels		50V (continuous), Basic Insulation Type Type tested at 1770V DC for 60 s, between field side and system No isolation between individual channels
Temperature, operating	**1794-OB16P:** -20…+55 °C (-4…+131 °F) **1794-OB16PXT:** -20…+70 °C (-4…+158 °F)	**1794-OB8EP:** -20…+55 °C (-4…+131 °F) **1794-OB8EPXT:** -20…+70 °C (-4…+158 °F)	0…55 °C (32…131 °F)	-20…+55 °C (-4…+131 °F)

(1) See 1794-OB16P Derating Curve.

(2) 6.0 A total for channels 0…15; 8.0 A total for channels 16…31.

1794-OB16P Derating Curve

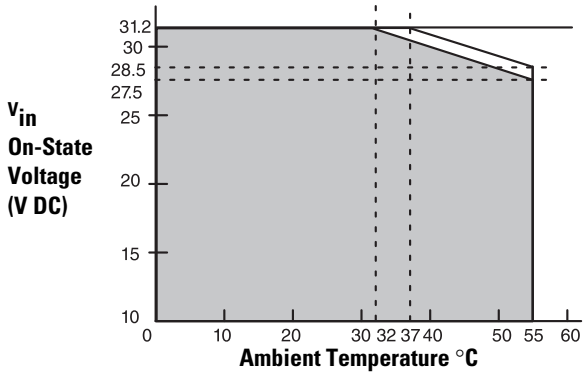

The area within the curve represents the safe operating range for the module under various conditions of user supplied 24V DC supply voltages and ambient temperatures.

= Normal mounting safe operating range included
= Other mounting positions (including inverted horizontal, vertical) safe operating range

1794-OB8EP Output Minimum Surge

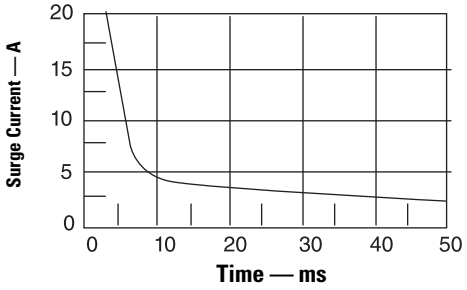

FLEX I/O Digital DC Diagnostic Modules

1794-IB16D is the diagnostic version of the 1794-IB16.

1794-OB16D is the diagnostic version of the 1794-OB16.

The modules can detect open wire, short circuit, and reverse polarity of external power. When the module detects a fault, the module fault LED status indicator lights up, the corresponding red channel LED status indicator lights up, and the corresponding module error bit (open wire, short circuit, or reverse power bit) is set. The reporting function provides results of the diagnostics as bits in its data table.

The modules have 16-bi-color channel LED status indicators and one red module status indicator. These indicators are driven from the customer field side power.

Digital DC Diagnostic Input Module

Specification	1794-IB16D
Voltage, on-state input, min	10V DC, sinking
Voltage, on-state input, nom	24V DC
Voltage, on-state input, max	31.2 DC(1)
Voltage, off-state input, max	5.0V DC
Current, on-state input, nom	8.2 mA @ 24V DC
Current, on-state input, max	12.1 mA @ 31.2V DC
Terminal base unit	1794-TB32, 1794-TB32S
Input impedance, max.	3.1 kΩ
Current, on-state input, min	2.0 mA @ 10V DC
Current, off-state input, max	1.5 mA
Power dissipation, max	8.5 W @ 31.2V DC
Thermal dissipation, max	29 BTU/hr @ 31.2V DC
Detected reverse polarity voltage	10V min(2)
Sensor voltage drop, max	2.2V DC
Current, sensor source, max	50 mA
Dimensions (HxWxD), approx	46 x 94 x 53 mm (1.8 x 3.7 x 2.1 in.) 94 x 94 x 69 mm (3.7 x 3.7 x 2.7 in.) installed
Isolation voltage	50V continuous, I/O to system Tested to 2121V DC for 1 s, I/O to system No isolation between individual channels
Temperature, operating	0…55 °C (32…131 °F)

(1) See 1794-IB16D Derating Curves.

(2) Module must detect if the reverse polarity external power supply voltage is greater than the value.

Digital DC Diagnostic Output Module

Specification	1794-OB16D
Voltage, on-state output, min	10V DC, sinking
Voltage, on-state output, max	31.2 DC
Voltage drop, on-state output, max	0.5V DC @ 0.5 A
Terminal base unit	1794-TB3, 1794-TB3S, 1794-TB3K, 1794-TB3SK
Current, on-state output, min	2.0 mA per channel
Current, on-state output, max	500 mA per channel 8 A per module
Leakage current, off-state output, max	0.5 mA
Output surge current, max	2 A for 50 ms, repeatable every 2 s
External DC supply voltage range	10…31.2V DC (5% AC ripple)
External DC supply current range	56…78 mA
Power dissipation, max	4.8 W @ 31.2V DC
Thermal dissipation, max	16.4 BTU/hr @ 31.2V DC
Short circuit protection	Thermal shutdown (auto reset)(1)
Open wire detection, off-state leakage current	0.1 mA(2)
Detect reverse polarity voltage, min	10V(3)
Current, sensor source, max	Yes
Dimensions (HxWxD), approx	46 x 94 x 53 mm (1.8 x 3.7 x 2.1 in.) 94 x 94 x 69 mm (3.7 x 3.7 x 2.7 in.) installed
Isolation voltage	50V continuous, I/O to system Tested to 2121V DC for 1 s, I/O to system No isolation between individual channels
Temperature, operating	0…55 °C (32…131 °F)

(1) Short circuit protection detection condition: when external power active, output signal active, and output port voltage less than 2V.

(2) When external power active and output signal inactive

(3) Module must detect if the reverse polarity external power supply voltage is greater than the value.

1794-IB16D Derating Curves

Input Voltage

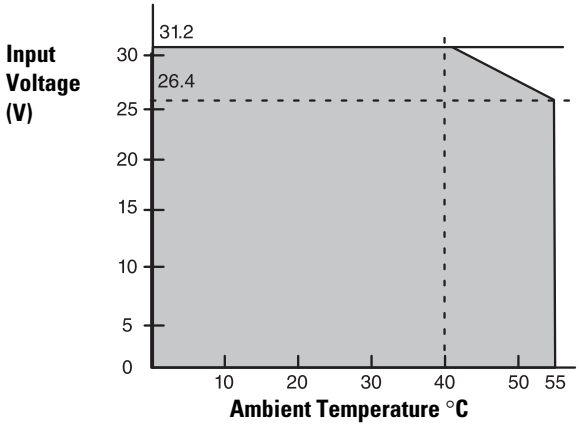

Sensor Power

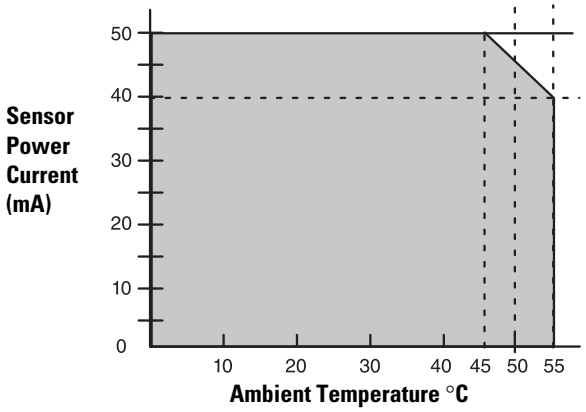

FLEX I/O Digital DC Combination Modules

The 1794-IB16XOB16P module has outputs that are self-protected against shorts, overload, and over temperature similar to the 1794-OB16P module.

The 1794-IB10XOB6 module requires the use of external fusing for individual outputs.

The 1794-IB10XOB6XT module is the extended temperature version of the 1794-IB10XOB6 module.

Digital DC Combination Modules

Specification	1794-IB10XOB6, 1794-IB10XOB6XT[2]	1794-IB16XOB16P[3]
Terminal base unit	1794-TB2, 1794-TB3, 1794-TB3S, 1794-TB3K, 1794-TB3SK	1794-TB32, 1794-TB32S
Isolation voltage	50V (continuous), Basic Insulation Type Type tested at 1250V AC for 60 s, between field side and system Routine tested at 2121V DC for 1 s, between field side and system No isolation between individual channels	50V (continuous), Basic Insulation Type Tested at 2121V DC for 1 s, system to I/O and inputs to outputs
Power dissipation, max	6.0 W @ 31.2V DC	7.0 W @ 31.2V DC
Thermal dissipation, max	20.3 BTU/hr @ 31.2V DC	23.9 BTU/hr @ 31.2V DC
Number of inputs	10	16
Voltage, on-state input, min	10V DC	
Voltage, on-state input, nom	24V DC	
Voltage, on-state input, max	31.2V DC	
Current, on-state input, min	2.0 mA	
Current, on-state input, nom	8.0 mA @ 24V DC	
Current, on-state input, max	11.0 mA	12.1 mA
Voltage, off-state input, max	5V DC	
Current, off-state input, max	1.5 mA	
Input impedance, max	4.8 kΩ	2.5 kΩ
Number of outputs	6	16
Voltage, on-state output, min	10V DC	
Voltage, on-state output, nom	24V DC	
Voltage, on-state output, max	31.2V DC	
Voltage drop, on-state output, max	1V DC @ 2 A 0.5V DC @ 1 A	0.5V DC @ 0.5 A
Current, on-state output, min	1.0 mA per channel	
Current, on-state output, max	2.0 A per channel 10 A per module	0.5 A per channel 8 A per module

Digital DC Combination Modules

Specification	1794-IB10XOB6, 1794-IB10XOB6XT[2]	1794-IB16XOB16P[3]
Voltage, off-state output, max	31.2V DC	
Leakage current, off-state output, max	0.5 mA	
Output delay time, OFF to ON, max[1]	0.5 ms	
Output delay time, ON to OFF, max	1.0 ms	
Output surge current, max	4 A for 50 ms repeatable every 2 s	1.5 A for 50 ms repeatable every 2 s
Voltage, off-state input, max	5.0V DC	
Current, on-state input, min	7.1 mA	5.5 mA @ 74V AC, 47 Hz
Current, off-state input, min	1.5 mA	
Dimensions (HxWxD), approx	46 x 94 x 53 mm (1.8 x 3.7 x 2.1 in.) 94 x 94 x 69 mm (3.7 x 3.7 x 2.7 in.) installed	
External DC supply voltage range	10…31.2V DC (includes 5% AC ripple)	
External DC supply current range	8 mA @ 10V DC 15 mA @ 19.2V DC 19 mA @ 24V DC 25 mA @ 31.2V DC	78 mA @ 10V DC
Temperature, operating	**1794-IB10XOB6:** -20…+55 °C (-4…+131 °F) **1794-IB10XOB6XT:** -20…+70 °C (-4…+158 °F)	0…55 °C (32…131 °F)

(1) Output OFF to ON or ON to OFF delay is the time from the module issuing an output on or off until the output actually turns on or off

(2) Module outputs are not fused. Fusing is recommended. If fusing is desired, you must supply external fusing. Use SAN-O MQ4-3A or Littelfuse 235-003.

(3) Outputs are electronically protected against overloads and shorts.

FLEX I/O Digital Contact Output Modules (Relay)

The 1794-OW8 module provides 8 isolated Form A (normally open) contacts capable of switching up to 2 A at up to 230V AC and 125V DC.

Do not attempt to increase load current or wattage capability beyond the maximum rating by connecting two or more outputs in parallel. The slightest variation in relay switching time may cause one relay to momentarily switch the total load current. Apply only +24V DC power to the power terminals on the terminal base. Make certain that all relay wiring is properly connected before applying any power to the module.

Total current draw through the terminal base unit is limited to 10 A. Separate power connections to the terminal base unit may be necessary.

The use of external fuses or a fused terminal base is required for individual outputs.

The 1794-OW8XT module is the extended temperature version of the 1794-OW8 module. The module is conformal coated.

Digital Contact Output Modules

Specification	1794-OW8	1794-OW8XT
Number of outputs	8	
Terminal base unit	1794-TB2, 1794-TB3, 1794-TB3S, 1794-TBN, 1794-TBNF, 1794-TB3K, 1794-TB3SK, 1794-TBNKF	
External DC supply voltage range	19.2…31.2V DC (includes 5% AC ripple)	
External DC supply current, nom	125 mA	
Leakage current, off-state output, max	1 mA @ 240V AC (through a snubber)	
Output delay time, OFF to ON, max	10 ms(1)	
Output delay time, ON to OFF, max	10 ms(2)	
Relay output current rating, resistive	2.0 A @ 5…30V DC 0.22 A @ 125V DC 2.0 A @ 125V AC 2.0 A @ 250V AC	
Relay output current rating, inductive	0.98 A steady state @ 5…30V DC, L/R = 7ms 0.5 A steady state @ 48V DC, L/R = 7ms 0.22 A steady state @ 125V DC, L/R = 7ms 2.0 A steady state, 15 A make @ 120V AC, PF = cos θ = 0.35 2.0 A steady state, 7.5 A make @ 240V AC, PF = cos θ = 0.35	
Contact resistance, initial	30 mΩ	
Switching frequency	0.3 Hz (1 operation every 3 s)	
Bounce time, mean	1.2 ms	
Contact load, min	100 µA @ 100 mV DC	
Mechanical life	100,000 operations at rated loads	
Fusing	3.0 A. 250V AC slow blow fuse (Littelfuse part number 239003).	
Power dissipation, max	5.5 W @ 31.2V DC	
Thermal dissipation, max	18.8 BTU/hr @ 31.2V DC	
Dimensions (HxWxD), approx	46 x 94 x 53 mm (1.8 x 3.7 x 2.1 in.) 94 x 94 x 69 mm (3.7 x 3.7 x 2.7 in.) installed	
Isolation voltage	250V (continuous), Basic Insulation Type, relay to relay, relay to backplane, and relay to power 50V (continuous), Basic Insulation Type, power to backplane Type tested at 1500V AC for 60 s, relay to relay, all combinations. Type tested at 3250V DC for 60 s, relay to backplane and relay to power Type tested at 720V DC for 60 s, power to backplane.	
Temperature, operating	-20…+55 °C (-4…+131 °F)	-20…+70 °C (-4…+158 °F)

(1) time from valid output on signal to relay energization by module.

(2) time from valid output off signal to relay deenergization by module.

FLEX I/O Analog, Thermocouple and RTD Modules

Choose analog, thermocouple, or RTD I/O modules when you need:

- **Individually configurable channels** allow the module to be used with a variety of sensors.
- **Online configuration**. Modules can be configured in RUN mode using programming software or the control program. This allows you to change configuration while the system is operating.
- **Selectable input filters** on many modules allow you to select from several different filter frequencies for each channel that best meets the performance needs of your application. Lower filter settings provide greater noise rejection and resolution. Higher filter settings provide faster performance. *Note: Isolated analog modules have four filter selections; the thermocouple module has ten; and the combined RTD/thermocouple module has eight.*
- **Ability to direct output device operation during an abnormal condition.**
  Each channel of the output module can be individually configured to hold its last value or assume a user-defined value on either a run-to-program or run-to-fault condition. This feature allows you to set the condition of your analog devices, and therefore your control process, which may help to ensure a reliable shutdown.
- **Selectable response to broken input sensor.** This feature provides feedback to the controller that a field device is not connected. This allows you to specify corrective action based on the channel condition.
- **Single-ended or differential inputs depending on module.** Analog modules have single-ended inputs while isolated analog and temperature modules have differential inputs. Single-ended voltage sensors reduce costs. Differential inputs are more expensive, but are typically more noise immune.
- **Over- and under-range detection and indication** are available with most modules. This eliminates the need to test values in the control program. While standard analog modules have limited diagnostics, temperature and isolated analog modules provide over-range, under-range, and wire-off diagnostics with alarm bits.
- **On-board scaling** is performed by the temperature modules and is user configurable for either °C, °F, °K, Ohms, or mV. This eliminates the need to scale the data in the user program.
- **Accuracy and resolution varies by module** and the associated application. Specifications are given for each module at it's operational conditions.
- **Internal calibration is performed** in the analog modules (1794-IE8, 1794-OE4, and 1794-IE4XOE2). User calibration is recommended (yearly) for isolated analog and temperature modules. All modules come factory calibrated.

Analog I/O Module Summary

Catalog Number	Inputs	Outputs	Terminal Base Unit	Module Type
1794-IE8	8	—	1794-TB2, 1794-TB3, 1794-TB3S, 1794-TB3T, 1794-TB3TS	Selectable, non-isolated inputs
1794-IE8XT			1794-TB2, 1794-TB3, 1794-TB3S, 1794-TB3T, 1794-TB3TS	Selectable, non-isolated inputs, Extended temperatures
1794-IE8H			1794-TB3G, 1794-TB3GS, 1794-TB3GK, 1794-TB3GSK	Single-ended, non-isolated, HART-enabled inputs
1794-IE12	12			Single-ended inputs
1794-IF4I	4	—	1794-TBN, 1794-TB2, 1794-TB3, 1794-TB3S, 1794-TB3T, 1794-TB3TS, 1794-TBNK, 1794-TB3K, 1794-TB3SK, 1794-TB3TK, 1794-TB3TSK	Single-ended, isolated inputs
1794-IF4IXT				Single-ended inputs, Isolated, Extended temperatures
1794-IF4ICFXT	4	—	1794-TB2, 1794-TB3, 1794-TB3S, 1794-TB3T, 1794-TB3TS, 1794-TBN	Isolated input
1794-IF8IH	8	—	1794-TB3, 1794-TB3S, 1794-TB3K, 1794-TB3SK	Single-ended, isolated, HART-enabled inputs
1794-IR8			1794-TB2, 1794-TB3, 1794-TB3S, 1794-TB3T, 1794-TB3TS, 1794-TBKD, 1794-TB3K, 1794-TB3SK, 1794-TB3TK, 1794-TB3TSK	Non-isolated relay inputs
1794-IRT8			1794-TB3G, 1794-TB3GS, 1794-TB3GK, 1794-TB3GSK, 1794-TB3GT (series B only)	Non-isolated RTD/Thermocouple inputs
1794-IRT8XT				Non-isolated RTD/Thermocouple inputs, Extended temperatures
1794-IT8			1794-TB2, 1794-TB3, 1794-TB3S, 1794-TB3T, 1794-TB3TS, 1794-TB3K, 1794-TB3SK, 1794-TB3TK, 1794-TB3TSK(3)	Non-isolated, Thermocouple, Millivolt inputs
1794-IE4XOE2	4	2		Single-ended, non-isolated I/O
1794-IE4XOE2XT				Single-ended, non-isolated I/O, Extended temperatures
1794-IE8XOE4	8	4	1794-TB3G, 1794-TB3GS, 1794-TB3GK, 1794-TB3GSK	Single-ended, non-isolated I/O
1794-IF2XOF2I	2	2	1794-TBN, 1794-TB2, 1794-TB3, 1794-TB3S, 1794-TB3T, 1794-TB3TS, 1794-TBNK, 1794-TB3K, 1794-TB3SK, 1794-TB3TK, 1794-TB3TSK	Single-ended, isolated I/O
1794-IF2XOF2IXT				Single-ended, isolated I/O, Extended temperatures
1794-OE4	—	4		Selectable, non-isolated outputs
1794-OE4XT				Selectable, non-isolated outputs, Extended temperatures
1794-OE8H(1)		8	1794-TB3G, 1794-TB3GS, 1794-TB3GK, 1794-TB3GSK	Single-ended, non-isolated, HART-enabled outputs
1794-OE12(2)		12		Single-ended, non-isolated outputs
1794-OF4I		4	1794-TBN, 1794-TB2, 1794-TB3, 1794-TB3S, 1794-TB3T, 1794-TB3TS, 1794-TBNK, 1794-TB3K, 1794-TB3SK, 1794-TB3TK, 1794-TB3TSK	Source isolated outputs
1794-OF4IXT				Source isolated outputs, Extended temperatures
1794-OF8IH		8	1794-TB3, 1794-TB3S, 1794-TB3K, 1794-TB3SK	Single-ended, isolated, HART-enabled outputs

(1) Do not exceed length of 30 m (100 ft) for signal cabling.

(2) Not supported by 1747-SN or 1747-BSN for use on RIO with SLC controllers.

(3) 1794-TB2, 1794-TB3, 1794-TB3S for mV inputs only.

Modules Specifications

The following section shows more detailed module specifications in comparative groups to facilitate your selection based on your requirements.

FLEX I/O Analog Input Modules

Analog Input Comparison

Catalog Number	Input Signal Range	Accuracy Drift with Temperature	External DC Supply Current, Nom	Power Dissipation, Max	Thermal Dissipation, Max
1794-IE8(1)	4…20 mA 0…20 mA ±10V 0…10V	Current Input: 0.0407% Full Scale/°C Voltage Input: 0.0428% Full Scale/°C	60 mA @ 24V DC	3 W @ 31.2V DC	10.2 BTU/hr @ 31.2V DC
1794-IE8XT					
1794-IE8H	4…20 mA	0.05%/°C of output signal range	295 mA @ 24V DC	3.9 W	13.5 BTU/hr
1794-IE12	4…20 mA (user configurable) 0…20 mA (user configurable)	Current Input: 0.004% Full Scale/°C Voltage Input: 0.004% Full Scale/°C	30 mA @ 24V DC; 45 mA @ 10.0V DC	1.2 W @ 31.2V DC; 1.1 W @ 24V DC; 0.9 W @ 10.0V DC	4.1 BTU/hr @ 31.2V DC
1794-IF4I(1)	4…20 mA 0…20 mA ±20 mA ±10V 0…10V ±5V 0…5V	Current Input: 0.0038% Full Scale/°C Voltage Input: 0.0028% Full Scale/°C	80 mA @ 24V DC	2.0 W @ 31.2V DC	6.9 BTU/hr @ 31.2V DC
1794-IF4IXT					6.8 BTU/hr @ 31.2V DC
1794-IF4ICFXT					
1794-IF8IH	4…20 mA (user configurable) 0…20 mA (user configurable)	0.4% Full Scale for 0…55 °C	190 mA @ 24V DC	4.8 W @ 31.2V DC	6.8 BTU/hr @ 31.2V DC
1794-IR8(1)(2)	1…433 Ω	—	140 mA @ 24V DC	3 W @ 31.2V DC	10.2 BTU/hr @ 31.2V DC
1794-IRT8(1)(2)	-40…+100 mV DC for thermocouples 0…325 mV DC for RTDs 0…500 Ω for resistance range	—	85 mA @ 24V DC		
1794-IRT8XT			95 mA @ 24V DC		
1794-IT8(1)(2)	±76.5 mV	—	150 mA @ 24V DC		
1794-IE8XOE4	4…20 mA (user configurable) 0…20 mA (user configurable)	Current Input or Output: 0.004% Full Scale @ 25 °C Voltage Input or Output: 0.004% Full Scale @ 25 °C	140 mA @ 24V DC; 280 mA @ 10.0V DC	3.0 W @ 31.2V DC; 2.3 W @ 24V DC; 2.0 W @ 10.0V DC	10.3 BTU/hr @ 31.2V DC
1794-IE4XOE2(1)	4…20 mA 0…20 mA ±10V 0…10V	Current Input: 0.0407% Full Scale/°C Voltage Input: 0.0428% Full Scale/°C Current Output: 0.0069% Full Scale/°C Voltage Output: 0.0045% Full Scale/°C	70 mA @ 24V DC	4.0 W @ 31.2V DC	13.6 BTU/hr @ 31.2V DC
1794-IE4XOE2XT			164 mA @ 10.5V DC		15.3 BTU/hr @ 31.2V DC
1794-IF2XOF2I(1)	4…20 mA 0…20 mA ±20 mA ±10V 0…10V ±5V 0…5V	Current Input: 0.0038% Full Scale/°C Voltage Input: 0.0028% Full Scale/°C Current Output: 0.0025% Full Scale/°C Voltage Output: 0.0012% Full Scale/°C	150 mA @ 24V DC	3.3 W @ 31.2V DC	11 BTU/hr @ 31.2V DC
1794-IF2XOF2IXT				2.0 W @ 31.2V DC	6.8 BTU/hr @ 31.2V DC

(1) Each module's channel is individually selectable or as a group of four.

(2) For the accuracy calculation, refer to the module's user manual.

1794-IE8 and 1794-IE8XT Analog 8 Input Module

The 1794-IE8 is a voltage/current measurement module that works with a variety of input sensors to measure input voltage in ±10V range or input current in the 0...20 mA range. Each channel is individually configurable for the desired input range. Use the 1794-IE8 with 2-, 3-, and 4-wire input sensor field devices.

The 1794-IE8XT module is the extended temperature version of the 1794-IE8 module. The module is conformal coated.

IMPORTANT Only connect either a voltage input or a current input per channel, not both.



Use caution to prevent ground loops when using a common ground, since the channels are not isolated.

Analog 8 Input Modules

Specification	1794-IE8 and 1794-IE8XT
Voltage, input, max overload	30V, single channel, continuous
Current, input, max overload	32 mA, single channel, continuous
Input impedance, nom	Current Input: 238 Ω Voltage Input: 100 kΩ
Input resolution	12 bits – unipolar 11 bits + sign – bipolar 5.13 µA/cnt 2.56 mV/cnt – unipolar 5.13 mV/cnt – bipolar
Data format	16-bit 2's complement, left-justified
Input conversion type	Successive approximation
Input conversion rate	256 µs all channels
Normal mode rejection ratio	Current input: -3 dB @ 9 Hz; -20 dB/decade -15.3 dB @ 50 Hz -16.8 dB @ 60 Hz Voltage input: -3 dB @ 17 Hz; -20 dB/decade -10 dB @ 50 Hz -11.4 dB @ 60 Hz
Calibration	None required
Step response to 63% of FS, input	Current input: 18.2 ms Voltage input: 9.4 ms
Dimensions (HxWxD), approx	46 x 94 x 53 mm (1.8 x 3.7 x 2.1 in.) 94 x 94 x 69 mm (3.7 x 3.7 x 2.7 in.) installed
Accuracy	Current input: 0.20% Full Scale @ 25 °C (77 °F) Voltage input: 0.20% Full Scale @ 25 °C (77 °F)(1)
Temperature, operating	**1794-IE8:** -20…+55 °C (-4…131 °F) **1794-IE8XT:** -20…+70 °C (-4…+158 °F)

(1) Includes offset, gain, non-linearity, and repeatability error terms

1794-IE8H HART Enabled Analog 8 Input Module

The 1794-IE8H is a HART enabled analog input module that works with HART enabled input sensors with input current in the 0...20 mA range. Use the 1794-IE8H with 2 or 3 wire transmitters. This module provides wire-off detection on a per-channel basis. The HART analog module can only be used on ControlNet or EtherNet/IP networks with one HART field device per channel.

HART Enabled Analog 8 Input Module

Specification	1794-IE8H
Voltage, input, max overload	—
Current, input, max overload	—
Isolation voltage	50V (continuous), Basic Insulation Type No isolation between individual channels
Input resolution	16 bits
Input resistance	—
Data format	Configurable
Input conversion type	—
Input conversion rate	10 ms (50 Hz) 8.33 ms (60 Hz)
Normal mode rejection ratio	—
Step response to 99% of FS, input	80 ms
Calibration	—
Dimensions (HxWxD), approx	46 x 94 x 75 mm (1.8 x 3.7 x 2.9 in.) 94 x 94 x 91 mm (3.7 x 3.7 x 3.6 in.) installed
Resolution	16 bit
Accuracy	Current input: 0.1% Full Scale @ 20 °C (68 °F)
Temperature, operating	-20…+55 °C (-4…+131 °F)

1794-IE12 Analog 12 Input Module

The 1794-IE12 is a voltage or current measurement module that measures input voltage in a ±10V range or current in the 0...20 mA range. Each channel is individually configurable and the out-of-range notification is by channel.

Analog 12 Input Module

Specification	1794-IE12
Voltage, input, max overload	30 continuous, single channel
Current, input, max overload	32 mA continuous, single channel
Isolation voltage	50 (continuous), Basic Insulation Type Type tested at 850V DC for 60 s, between field side and system No isolation between individual channels
Input resolution	320 μV/cnt 0.641μA/cnt

Analog 12 Input Module

Specification	1794-IE12
Input resistance	Current input: <100 Ω Voltage input: >1 MΩ
Data format	16 bits, 2's complement
Input conversion type	Successive approximation
Input conversion rate	8.0 ms all channels
Normal mode rejection ratio	Voltage/current terminal: -3 dB @ 0.05 Hz -20 dB/decade -52 dB @ 50 Hz -54 dB @ 60 Hz Voltage/current terminal with Quick Step: -3 dB @ 1.5 Hz; -20 dB/decade -29 dB @ 50 Hz -31 dB @ 60 Hz
Step response to 63% of FS, input	Current or voltage input: 1.3 s (0.09 s with Quick Step)
Calibration	None required
Dimensions (HxWxD), approx	46 x 94 x 53 mm (1.8 x 3.7 x 2.1 in.) 94 x 94 x 69 mm (3.7 x 3.7 x 2.7 in.) installed
Resolution	16 bit unipolar 15 bit + bipolar
Accuracy	Current input: 0.1% Full Scale @ 25 °C (77 °F) Voltage input: 0.1% Full Scale @ 25 °C (77 °F)(1)
Temperature, operating	20...+60 °C (-4...+140 °F)

(1) Includes offset, gain, non-linearity, and repeatability error terms

1794-IF4I and 1794-IF4IXT Isolated Analog 4 Input Module

The 1794-IF4I and 1794-IF4IXT are input modules with channel-to-channel isolation that work with a variety of input sensors to measure input voltage in ±10V range or input current in the 0...20 mA range. Each channel is individually configurable for the desired input range. Use the 1794-IF4I or 1794-IF4IXT with 2-, 3-, and 4-wire input sensor field devices.

The 1794-IF4IXT is the extended temperature version of the 1794-IF4I module.

Settings to these parameters affect all inputs set to 150 Hz, 300 Hz, or 600 Hz. The parameters do not affect channels set at 1200 Hz.

IMPORTANT Only connect either a voltage input or a current input per channel, not both.

Isolated Analog Input Modules

Specification	1794-IF4I, 1794-IF4IXT
Voltage, input, max overload	30V, single channel, continuous
Current, input, max overload	32 mA, single channel, continuous

Isolated Analog Input Modules

Specification	1794-IF4I, 1794-IF4IXT
Input resolution	16 bits – unipolar 15 bits + sign – bipolar 0.320 μA/cnt – unipolar 0.640 μA/cnt – bipolar 0.156 mV/cnt – unipolar 0.313 mV/cnt – bipolar
Input resistance	Current input: <100 Ω(1) Voltage input: >10 MΩ
Data format	2's complement 2's complement percent binary offset binary
Input conversion type	Sigma Delta
Input conversion rate	2.5/5.0/7.5 ms all channels
Normal mode rejection ratio	-3 dB @ 12 Hz (300 Hz conversion rate) -80.0 dB @ 50 Hz (300 Hz conversion rate)
Calibration	Factory calibrated(2)
Step response to 63% of FS, input	Current or voltage input: 1200 Hz conversion rate = 0.6 ms 600 Hz conversion rate = 6.7 ms 300 Hz conversion rate = 13.4 ms 150 Hz conversion rate = 26.7 ms
Dimensions (HxWxD), approx	46 x 94 x 53 mm (1.8 x 3.7 x 2.1 in.) 94 x 94 x 69 mm (3.7 x 3.7 x 2.7 in.) installed
Resolution	16 bit unipolar 15 bit + bipolar
Accuracy	Current input: 0.1% Full Scale @ 25 °C (77 °F) Voltage input: 0.1% Full Scale @ 25 °C (77 °F)(3)
Temperature, operating	**1794-IF4I:** 0…55 °C (32…131 °F) **1794-IF4IXT:** -20…+70 °C (-4…+158 °F)

(1) If 24V DC is removed from the module, input resistance = 10 kΩ.

(2) Can be calibrated in field when necessary.

(3) Includes offset, gain, non-linearity, and repeatability error terms

1794-IF4ICFXT FLEX XT I/O Isolated Input Analog Module

In addition to the features supported by the 1794-IF4I and 1794-IF4IXT modules, the 1794-IF4ICFXT features three additional parameters that allow additional control over the way the analog signals are processed by the module. The settings are at the module level.

Settings to these parameters affect all inputs set to 150 Hz, 300 Hz, or 600 Hz. The parameters do not affect channels set at 1200 Hz.

IMPORTANT Only connect either a voltage input or a current input per channel, not both.

Isolated Analog Input Modules

Specification	1794-IF4ICFXT
Maximum overload	30V continuous or 32 mA continuous, one channel at a time
Input resistance Voltage terminal Current terminal	 >10 MΩ <100 Ω(1)
Data format	2's complement 2's complement percent binary offset binary
Conversion type	Sigma Delta
Update rate	2.5/5.0/7.5 ms all channels (see input update rate table in publication 1794-IN130
Normal mode rejection ratio - voltage or current Terminal	-3 dB @ 12 Hz (300 Hz conversion rate) -80 dB @ 50 Hz (300 Hz conversion rate) -3 dB @ 6 Hz (150 Hz conversion rate) -80 dB @ 60 Hz (150 Hz conversion rate)
Calibration required	Factory calibrated. Can be calibrated in field when necessary
Step response to 63% - voltage or current terminal	1200 Hz conversion rate = 0.6 ms 600 Hz conversion rate = 06.7 ms 300 Hz conversion rate = 13.4 ms 150 Hz conversion rate = 26.7 ms
Dimensions (HxWxD), approx	46 mm x 94 mm x 75 mm (1.8 in. x 3.7 in. x 2.95 in.) with module installed in base
Resolution Voltage Current	16 bits - unipolar; 15 bits plus sign - bipolar 0.156 mV/cnt unipolar; 0313 mV/cnt bipolar 0.320 µA/cnt unipolar; 0.640 µA/cnt bipolar
Accuracy	
Temperature, operating	-20…+70 °C (-4…+158 °F)

(1) If 24V DC is removed from the module, input resistance = 10 kΩ.

1794-IF8IH HART Enabled Analog 8 Input Module

The 1794-IF8IH accepts up to 8 analog inputs. The inputs are isolated and will accept current in either of the following two ranges: 4...20 mA or 0...20 mA. The default input range is 0...20 mA. The inputs have both fixed hardware filters and selectable firmware digital filters.

HART Enabled Analog 8 Input Module

Specification	1794-IF8IH
Current input, max overload	32 mA DC continuous, for any or all channels
Isolation voltage	120V (continuous), Basic Insulation Type Type tested @ 1000V AC for 60 s, between user power to system, channel to system, and channel to channel
Input resolution	16 bits – unipolar 15 bits + sign – bipolar 0.320 μA/cnt unipolar 0.640 μA/cnt bipolar
Input resistance	249 Ω ±1%
Data format	Engineering Units Percent of Full Scale Proportional Count
Input conversion type	Sigma Delta Analog to Digital Converter
Normal mode rejection ratio	> 70 dB @ 50/60 Hz (4.17 Hz ADC conversion rate) > 65 dB @ 50/60 Hz (10.0 Hz ADC conversion rate) > 75 dB @ 50 Hz (16.7 Hz ADC conversion rate) > 85 dB @ 60 Hz (19.6 Hz ADC conversion rate)
Calibration	Factory calibrated(1)
Step response to 63% of FS, input	4.17 Hz conversion rate = 480 ms 10.0 Hz conversion rate = 200 ms 16.7 Hz conversion rate = 120 ms 19.6 Hz conversion rate = 101 ms 62 Hz conversion rate = 32 ms 470 Hz conversion rate = 4 ms
Dimensions (HxWxD), approx	46 x 94 x 75 mm (1.8 x.7 x 2.9 in.) 94 x 94 x 91 mm (3.7 x 3.7 x 3.6 in.) installed
Accuracy	0.1% Full Scale @ 25 °C
Temperature, operating	0…55 °C (32…131 °F)

(1) Can be calibrated in field when necessary.

1794-IR8 RTD Input Module

The 1794-IR8 is a temperature-measuring module that accepts 2- and 3-wire RTDs. use the 1794-IR8 in applications where channel fast-update rate is not required. If you need channel fast-update rates, use the 1794-IRT8 module described on page 54.

RTD Input Module

Specification	1794-IR8
Input resolution	16 bits across 435 Ω
Sensors supported	Resistance: 100 Ω Pt μ = 0.00385 Euro (-200…+870 °C) 100 Ω Pt μ = 0.003916 U.S. (-200…+630 °C) 200 Ω Pt μ = 0.00385 Euro (-200…+630 °C) 500 Ω Pt μ = 0.00385 U.S. (-200…+630 °C) 100 Ω Nickel μ = 0.00618 (-60…+250 °C) 120 Ω Nickel μ = 0.00672 (-60…+250 °C) 200 Ω Nickel μ = 0.00618 (-60…+250 °C) 500 Ω Nickel μ = 0.00618 (-60…+250 °C) 10 Ω Copper μ = 0.00427 (-200…+260 °C)
Data format	16 bits, 2's complement, left justified; Offset binary
Settling time	100% of final value available at system throughput rate
Normal mode rejection ratio	60 dB @ 60 Hz for A/D filter cutoff @ 15 Hz
Common mode rejection ratio	-120 dB @ 60 Hz -100 dB @ 50 Hz with A/D filter cutoff @ 10 Hz
Common mode voltage	0V between channels (common return)
Accuracy, normal mode (max)(1)	0.05% Full Scale (low humidity) without calibration
Accuracy, enhanced mode (typical)	0.01% Full Scale (low humidity) without calibration
System throughput, normal mode	Programmable from 28…325 ms/channel 325 ms (1 channel scanned) 2.6 s (8 channels scanned)
System throughput, enhanced mode	Programmable from 56…650 ms/channel 650 ms (1 channel scanned) 2.925 s (8 channels scanned)
Open RTD detection	Out of range upscale reading
Open circuit detection type	Available at system throughput rate
Overvoltage capability	35V DC, 25V AC continuous @ 25 °C 250V peak transient
Channel bandwidth	DC to 2.62 Hz (-3 dB)
RTD excitation current	718.39 μA
RFI immunity	Error of <1% of range @ 10V/m, 27…1000 MHz
Gain drift with temperature	Normal mode: 20 ppm/ °C max Enhanced mode: 10 ppm/ °C max
Dimensions (HxWxD), approx	46 x 94 x 53 mm (1.8 x 3.7 x 2.1 in.) 94 x 94 x 69 mm (3.7 x 3.7 x 2.7 in.) installed
Temperature, operating	-20…+55 °C (-4…+131 °F)

(1) The number is based on the hardware of the module only. Additional errors are introduced depending on the sensor used., environment, and other factors. Contact technical support for more information.

1794-IR8 Derating Curve

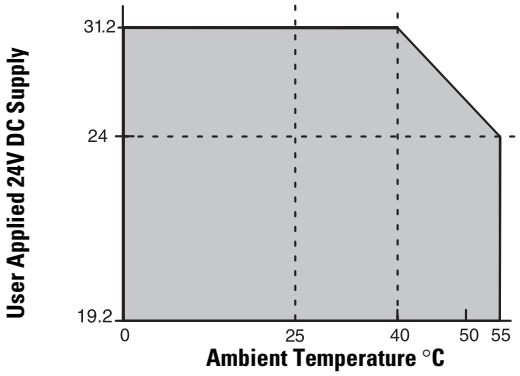

The area within the curve represents the safe operating range for the module under various conditions of user supplied 24V DC supply voltages and ambient temperatures.

= Safe operating area

1794-IRT8 and 1794-IRT8XT Thermocouple/RTD Input Module

The 1794-IRT8 is a high-speed, high-accuracy temperature/mV measuring module that accepts thermocouple inputs, 2-, 3-, and 4-wire RTD inputs, and mV source inputs.

The 1794-IRT8 offers the following:

- wire-off, over-range, and under-range detection
- good common mode rejection
- usage with long thermocouple wiring
- effective in noisy environments
- usage with grounded or ungrounded thermocouples
- more stability with ambient temperature changes than with the 1794-IR8 and the 1794-IT8

Release of Series B version provides capability to work with grounded thermocouples.

Use cold junction compensators 1794-CJC2 in thermocouple mode. Two cold junction compensators are shipped with the 1794-IRT8.

The 1794-IRT8XT is the extended temperature version of the 1794-IRT8 module. The module is conformal coated.

Thermocouple/RTD Input Module

Specification	1794-IRT8 and 1794-IRT8XT
Input resolution	14 bits
Supported RTD types	Resistance: 100 Ω Pt μ = 0.00385 Euro (-200…+870 °C) 100 Ω Pt μ = 0.003916 U.S. (-200…+630 °C) 200 Ω Pt μ = 0.00385 Euro (-200…+400 °C) 200 Ω Pt μ = 0.003916 U.S. (-200…+400 °C) 100 Ω Nickel μ = 0.00618 (-60…+250 °C) 120 Ω Nickel μ = 0.00672 (-60…+320 °C) 200 Ω Nickel μ = 0.00618 (-60…+200 °C) 10 Ω Copper μ = 0.00427 (-200…+260 °C)
Supported Thermocouple types	Type B: 300…1800 °C (572…3272 °F) Type E: -270…+1000 °C (-454…+1832 °F) Type J: -210…+1200 °C (-346…+2192 °F) Type K: -270…+1372°C (-454…+2502 °F) Type N: -270…+1300°C (-454…+2372 °F) Type R: -50…+1768°C (-58…+3214 °F) Type S: -50…+1768°C (-58…+3214 °F) Type T: -270…+400°C (-454…+752 °F) Type TXK/XK (L): -200…+800°C (-328…+1472 °F)
Accuracy	0.05% of full range in mV mode with filtering selected Hardware only = 0.10% of full rang in mV mode
Common mode rejection ratio	-80 dB @ 5V peak-to-peak 50…60 Hz
Common mode input range	Series A – ±4V Series B – ±15V
System throughput	7.4 ms – mV 8.0 ms – Ω – 2-wire 10.0 ms – Ω – 3-wire 10.4 ms – Ω – 4-wire 8.0 ms – Ω – 2-wire RTD (°F) 10.4 ms – Ω – 4-wire RDT (°F) 8.8 ms – Ω – 2-wire RDT (°C), (°K) 10.8 ms – Ω – 4-wire RDT (°C), (°K) 9.8 ms – Ω – 3-wire RDT (°F) 10.0 ms – Ω – 3-wire RDT (°C), (°K) 8.0 ms – Thermocouples (°F) 8.8 ms – Thermocouples (°C), (°K)[1]
Open circuit detection type	Series A: RTD and TC modes – open input – module defaults to max value Series B: RTD mode – open input – module defaults to max value Series B: TC mode – open input – module defaults to min value
Excitation current	630 μA
Overvoltage capability	Series A: 7V DC continuous @ 25 °C Series B: 15V DC continuous @ 25 °C
Open input detection time	0…3.8 s for Series A, revision D or earlier Immediate detection (max 2 scans) for Series A, revision E or later Immediate detection (max 2 scans) for Series B
Cold junction compensation range	0…70 °C for firmware Series A, revision D or earlier -20…100 °C for firmware Series A, revision E or later -20…100 °C for firmware Series B
Cold junction compensation	A-B Cold Junction Compensation Kit, 1794-CJC[2]

Thermocouple/RTD Input Module

Specification	1794-IRT8 and 1794-IRT8XT
Data format	°C (implied decimal point XXX.X) °F (implied decimal point XXX.X) °K (implied decimal point XXX.X) -32767…32767 0…65535 0…5000 (Ω mode) (implied decimal point XXX.X) -4000…10000 (mV mode) (implied decimal point XXX.XX)
Overall drift with temperature, max	Series A: 150 ppm/ °C of span Series B: 50 ppm/ °C of span
Dimensions (HxWxD), approx	46 x 94 x 53 mm (1.8 x 3.7 x 2.1 in.) 94 x 94 x 69 mm (3.7 x 3.7 x 2.7 in.) installed
Temperature, operating	**1794-IRT8:** -20…+55 °C (-4…+131 °F) **1794-IRT8XT:** -20…+70 °C (-4…+158 °F)

(1) For maximum throughput, short circuit all unused channels.

(2) Kit supplied with the module and contains 2 compensators.

1794-IT8 Thermocouple/mV Input Module

The 1794-IT8 module is a temperature/mV measuring module that accepts inputs from a variety of thermocouples and from the mV source in the range of ±76.5 mV. Choose the 1794-IT8 module when you need the following:

- A cost effective module.
- Applications that don't require high accuracy or high speed.
- Support for grounded or ungrounded thermocouples.

Use cold junction compensators (cat. no. 1794-CJC2) in thermocouple mode. Two cold junction compensators are shipped with the 1794-IT8 module. This module is suitable to work with grounded thermocouples, if certain guidelines are followed. Refer to the module's user manual for more information.

The FLEX I/O cold junction compensator kit, containing two compensators, is included with the 1794-IT8 module. You can order additional compensators using the above catalog number.

Thermocouple/mV Input Module

Specification	1794-IT8
Input resolution	16 bits (2.384 µV typical)
Supported Thermocouple types	Type B: 300…1800 °C (572…3272 °F) Type C: 0…2315 °C (32…4199 °F) Type E: -270…+1000 °C (-454…+1832 °F) Type J: -210…+1200 °C (-346…+2192 °F) Type K: -270…+1372°C (-454…+2502 °F) Type N: -270…+1300°C (-454…+2372 °F) Type R: -50…+1768°C (-58…+3214 °F) Type S: -50…+1768°C (-58…+3214 °F) Type T: -270…+400°C (-454…+752 °F) Type TXK/XK (L): -200…+800°C (-328…+1472 °F)

Thermocouple/mV Input Module

Specification	1794-IT8
Data format	16 bits, 2's complement; Offset binary (unipolar)
Settling time	100% of final value available at system throughput rate
Normal mode rejection ratio	60 dB @ 60 Hz
Common mode rejection ratio	-115 dB @ 60 Hz -100 dB @ 50 Hz
Common mode input range	± 10V
Accuracy(1)	With filter (max): 0.025% Full Scale @ 24 °C (±0.5 °C) Without filter (max): 0.05% Full Scale @ 24 °C (±0.5 °C)
System throughput	325 ms (1 channel scanned), programmable to 28 ms 2.6 s (8 channels scanned), programmable to 224 ms
Open input detection	Available at system throughput rate
Open circuit detection type	Out of range reading (upscale)
Overvoltage capability	35V DC, 25V AC continuous @ 25 °C 250V peak transient
Channel bandwidth	0…2.62 Hz (-3 dB)
RFI immunity	Error of <1% of range @ 10V/m, 27…1000 MHz
Input offset drift with temperature	+6 μV/°C max
Gain drift with temperature, max	10 ppm/ °C
Overall drift with temperature, max	50 ppm/ °C of span
Cold junction compensation range	0…70 °C
Cold junction compensation	A-B Cold Junction Compensation Kit, 1794-CJC(2)
Dimensions (HxWxD), approx	46 x 94 x 53 mm (1.8 x 3.7 x 2.1 in.) 94 x 94 x 69 mm (3.7 x 3.7 x 2.7 in.) installed
Temperature, operating	-20…+55 °C (-4…+131 °F)

(1) The number is based on the hardware of the module only. Refer to the user manual for the complete error calculation procedure.

(2) Kit supplied with the module and contains 2 compensators.

1794-IRT8 Derating Curve

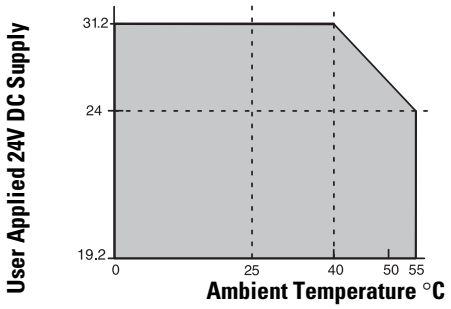

The area within the curve represents the safe operating range for the module under various conditions of user supplied 24V DC supply voltages and ambient temperatures.

= Safe operating area

1794-IE8XOE4 8 Input/4 Output Analog Combination Module

The 1794-IE8XOE4 is a combination module with 8 inputs and 4 outputs. Inputs can be configured individually for different modes, as can outputs. Inputs accept signals from 2, 3, and 4 wire input sensors in the ranges of ±10V or 0... 20 mA. Outputs produce signals in the range of ±10V or 0...20 mA.

8 Input / 4 Output Analog Combination Module

Specification	1794-IE8XOE4
Calibration	None required
Input conversion type	Successive approximation
Input conversion rate	8 ms all channels
Input resolution	16 bit, 2's complement 320 μV/cnt 0.641 μA/cnt
Data format	16 bits, 2's complement
Step response to 63% of FS, input	Current or voltage input: 1.3 s (0.09 s with Quick Step)
Step response to 63% of FS, output	-70% 1st convert 96% 2nd convert 100% 3rd convert
Normal mode rejection ratio	Voltage/current terminal: -3 dB @ 0.05 Hz; -20 dB/decade -52 dB @ 50 Hz -54 dB @ 60 Hz Voltage/current terminal with Quick Step: -3 dB @ 1.5 Hz; -20 dB/decade -29 dB @ 50 Hz -31 dB @ 60 Hz
Accuracy(1)	Current input or output: 0.1% Full Scale @ 25 °C Voltage input or output: 0.1% Full Scale @ 25 °C
Accuracy drift with temperature	Current input or output: 0.004% Full Scale @ 25 °C Voltage input or output: 0.004% Full Scale @ 25 °C
Input impedance(2)	Current input: <100 Ω Voltage input: >1 MΩ
Voltage input, overload, max	30V, single channel, continuous
Output resolution	16 bit, 2's complement 320 μV/cnt 0.641 μA/cnt
Output conversion type	Digital-to-analog converter
Output conversion rate	Outputs: DAC
Current load on voltage output, max	3 mA
Resistive load on current output	0…750 Ω over full power supply range
Dimensions (HxWxD), approx	46 x 94 x 53 mm (1.8 x 3.7 x 2.1 in.) 94 x 94 x 69 mm (3.7 x 3.7 x 2.7 in.) installed
Temperature, operating	-20...+60 °C (-4...+140 °F)

(1) Includes offset, gain, non-linearity and repeatability error terms.

(2) If 24V DC is removed from the module, input resistance = 10 KΩ.

1794-IE4XOE2 and 1794-IE4XOE2XT 4 Input/2 Output Analog Combination Modules

The 1794-IE4XOE2 is a combination module with 4 inputs and 2 outputs. Inputs can be configured individually for different modes. Inputs accept signals from a variety of inputs sensors (2-, 3-, and 4-wire) in the range of ±10V or 0...20 mA. Outputs are also individually configurable for different modes. Outputs produce signals in the range of ±10V or 0...20 mA.

1794-IE4XOE2XT is the extended temperature version of the 1794-IE4XOE2.

4 Input / 2 Output Analog Combination Modules

Specification	1794-IE4XOE2, 1794-IE4XOE2XT
Calibration	None required
Input conversion type	Successive approximation
Input conversion rate	256 μs all channels
Input resolution	12 bits – unipolar 11 bits + sign – bipolar 5.13 μA/cnt 2.56 μV/cnt – unipolar 5.13 μV/cnt – bipolar
Data format	16 bits, 2's complement; left-justified
Step response to 63% of FS, input	Current input: 18.2 ms Voltage input: 9.4 ms
Step response to 63% of FS, output	Current or voltage output: 24 ms
Normal mode rejection ratio	Current input: -3 dB @ 9 Hz; -20 dB/decade -15.3 dB @ 50 Hz -16.8 dB @ 60 Hz Voltage input: -3 dB @ 17 Hz; -20 dB/decade -10 dB @ 50 Hz -11.4 dB @ 60 Hz
Accuracy[1]	Current input: 0.20% Full Scale @ 25 °C Voltage input: 0.20% Full Scale @ 25 °C Current output: 0.425% Full Scale @ 25 °C Voltage output: 0.133% Full Scale @ 25 °C
Accuracy drift with temperature	Current input: 0.0407% Full Scale @ 25 °C Voltage input: 0.0428% Full Scale @ 25 °C Current output: 0.0069% Full Scale @ 25 °C Voltage output: 0.0045% Full Scale @ 25 °C
Input impedance	Current input: 238 Ω Voltage input: 100 kΩ
Voltage input, overload, max	30V, single channel, continuous
Output resolution	12 bits + sign 5.13 μA/cnt 2.56 mV/cnt
Output conversion type	Pulse width modulation
Output conversion rate	1.024 ms all channels
Current load on voltage output, max	3 mA
Resistive load on current output	15…750 Ω

4 Input / 2 Output Analog Combination Modules

Specification	1794-IE4XOE2, 1794-IE4XOE2XT
Dimensions (HxWxD), approx	46 x 94 x 53 mm (1.8 x 3.7 x 2.1 in.) 94 x 94 x 69 mm (3.7 x 3.7 x 2.7 in.) installed
Temperature, operating	**1794-IE4XOE2:** -20…+55 °C (-4…+131 °F) **1794-IE4XOE2XT:** -20…+70 °C (-4…+158 °F)

(1) Includes offset, gain, non-linearity and repeatability error terms.

1794-IF2XOF2I and 1794-IF2XOF2IXT 2 Input/2 Output Isolated Analog Combination Module

The 1794-IF2XOF2I is a combination module with 2 inputs and 2 outputs with isolated, individually-configurable channels. Inputs accept signals from a variety of input sensors (2-, 3-, and 4-wire) in the range of ±10V or ±20 mA. Outputs produce signals in the range of ±10V or 0...20 mA.

The 1794-IF2XOF2IXT is the extended temperature version of the 1794-IF2XOF2I module.

ATTENTION: Only connect either a voltage input or a current input per channel, not both.

2 Input/2 Output Isolated Combination Module

Specification	1794-IF2XOF2I, 1794-IF2XOF2IXT
Calibration	Factory calibration(2)
Input conversion type	Sigma Delta
Input conversion rate	2.5/5.0/7.5 ms all channels
Input resolution	16 bit – unipolar 15 bit + sign – bipolar 0.156 mV/cnt – unipolar 0.313 mV/cnt – bipolar 0.320 µA/cnt – unipolar 0.640 µA/cnt – bipolar
Isolation voltage	120V continuous (when used with 1794-TB3, 1794-TB3S, 1794-TB2, 1794-TB3T, or 1794-TB3TS) 250V continuous (when used with 1794-TBN) Tested at 1500V AC for 60 s and 2550V DC for 1 s, channel to channel, I/O to system
Data format	16 bits, 2's complement 2's complement percent binary offset binary
Step response to 63% of FS, input	Current or voltage input: 1200 Hz conversion rate = 0.6 ms 600 Hz conversion rate = 6.7 ms 300 Hz conversion rate = 13.4 ms 150 Hz conversion rate = 26.7 ms

2 Input/2 Output Isolated Combination Module

Specification	1794-IF2XOF2I, 1794-IF2XOF2IXT
Normal mode rejection ratio	-3 dB @ 12 Hz (300 Hz conversion rate) -80.0 dB @ 50 Hz (300 Hz conversion rate) -3 dB at 6 Hz (150 Hz conversion rate) -80 dB at 60 Hz (150 Hz conversion rate)
Accuracy(1)	Current input or output: 0.1% Full Scale @ 25 °C Voltage input or output: 0.1% Full Scale @ 25 °C
Accuracy drift with temperature	Current input: 0.0038% Full Scale/°C Voltage input: 0.0028% Full Scale /°C Current output: 0.0025% Full Scale /°C Voltage output: 0.0012% Full Scale /°C
Input impedance	Current input: <100 Ω Voltage input: >1 MΩ(3)
Voltage input, overload, max	30V, single channel, continuous
Output resolution	15 bit + sign 0.656 μA/cnt 0.320 mV/cnt
Output conversion type	Digital-to-analog converter
Output conversion rate	2.5/5.0 ms
Current load on voltage output, max	3 mA
Resistive load on current output	0…750 Ω
Dimensions (HxWxD), approx	**1794-IF2XOF2I:** 46 x 94 x 53 mm (1.8 x 3.7 x 2.1 in.) 94 x 94 x 69 mm (3.7 x 3.7 x 2.7 in.) installed **1794-IF2XOF2IXT:** 46 x 94 x 75 mm (1.8 x 3.7 x 2.9 in.) 94 x 94 x 91 mm (3.7 x 3.7 x 3.6 in.) installed
Temperature, operating	**1794-IF2XOF2I:** -20…+55 °C (-4…+131 °F) **1794-IF2XOF2IXT:** -20…+70 °C (-4…+158 °F)

(1) Includes offset, gain, non-linearity and repeatability error terms.

(2) Can be calibrated in field when necessary.

(3) If 24V DC is removed from the module, input resistance = 10 KΩ.

FLEX I/O Analog Output Modules

Analog Output Comparison

Catalog Number	Output Signal Range	External DC Supply Current, Nom	Power Dissipation, Max	Thermal Dissipation, Max
1794-OE4(1)	4…20 mA 0…20 mA ±10V 0…10V	70 mA @ 24V DC(2)	4.5 W @ 31.2V DC	15.3 BTU/hr @ 31.2V DC
1794-OE4XT		180 mA @ 10.5V DC		13.6 BTU/hr @ 31.2V DC
1794-OE8H	4…20 mA (user configurable) 0…20 mA (user configurable)	255 mA @ 24V DC	6.1 W	20.8 BTU/hr
1794-OE12	0 mA output until module is configured 4…20 mA (user configurable) 0…20 mA (user configurable)	320 mA @ 24V DC; 720 mA @ 10.0V DC	40 W @ 31.2V DC; 4.3 W @ 24V DC; 10.0 W @ 10.0V DC	14.7 BTU/hr @ 24V DC

Analog Output Comparison

Catalog Number	Output Signal Range	External DC Supply Current, Nom	Power Dissipation, Max	Thermal Dissipation, Max
1794-OF4I	4…20 mA 0…20 mA ±10V 0…10V ±5V 0…5V	210 mA @ 24V DC	4.7 W @ 31.2V DC	16 BTU/hr @ 31.2V DC
1794-OF8IH	4…20 mA (user configurable) 0…20 mA (user configurable)	450 mA @ 24V DC	5.0 W @ 31.2V DC	6.8 BTU/hr @ 31.2V DC
1794-IE8XOE4(1)	4…20 mA 0…20 mA ±10V 0…10V	140 mA @ 24V DC; 280 mA @ 10.0V DC	3.0 W @ 31.2V DC; 2.3 W @ 24V DC; 2.0 W @ 10.0V DC	10.3 BTU/hr @ 31.2V DC
1794-IE4XOE2(1)	4…20 mA 0…20 mA ±10V 0…10V	70 mA @ 24V DC	4.0 W @ 31.2V DC	13.6 BTU/hr @ 31.2V DC
1794-IF2XOF2I(1)	4…20 mA 0…20 mA ±10V 0…10V ±5V 0…5V	150 mA @ 24V DC	3.3 W @ 31.2V DC	11 BTU/hr @ 31.2V DC

(1) Each module's channel is individually selectable or as a group of four.

(2) Not including outputs.

1794-OE4 and 1794-OE4XT Analog 4 Output Module

The 1794-OE4 module has 4 output, non-isolated, individually-configurable channels. Outputs are capable of driving the field devices that require a voltage of ±10V or a current of 0... 20 mA.

Analog 4 Input Modules

Specification	1794-OE4	1794-OE4XT
Output resolution	12 bit + sign 2.56 mV/cnt 5.13 μA/cnt	12 bits + sign 0.156 mV/cnt 0.320 μA/cnt
Data format	16 bits, 2's complement, left-justified	
Output conversion type	Pulse width modulation	
Output conversion rate	1.024 ms all channels	Outputs: PWM
Step response to 63% of FS, output	Voltage output: 24 ms	
Current load on voltage output, max	3 mA	
Output current, resistive load	15…750 Ω	
Accuracy	Current input: 0.425% Full Scale @ 25 °C (77 °F) Voltage input: 0.133% Full Scale @ 25 °C (77 °F)(1)	

Analog 4 Input Modules

Specification	1794-OE4	1794-OE4XT
Accuracy drift w/temp	Current input: 0.0069% Full Scale /°C Voltage input: 0.0045% Full Scale/°C	
Calibration	None required	
Isolation voltage	50 (continuous), I/O to system Type tested at 850V DC for 1 s, I/O to system Type tested at 850V DC for 60 s (for 1794-OE4XT only) No isolation between individual channels	
Power dissipation, max	4.5 W @ 31.2V DC	
Thermal dissipation, max	15.3 BTU/hr @ 31.2V DC	13.6 BTU/hr @ 31.2V DC
Wire size	0.34…2.5 mm^2 (22…2 AWG) solid or stranded shielded copper wire rated at 75 °C (167 °F) or greater 1.2 mm (3/64 in.) insulation max	
Wire category	2 – on signal ports 2 – on power ports(2)	2 - on signal ports
Dimensions (HxWxD), approx	46 x 94 x 53 mm (1.8 x 3.7 x 3.1 in.) 94 x 94 x 69 mm (3.7 x 3.7 x 2.7 in.) installed	
Temperature, operating	-20…+55 °C (-4…+131 °F)	-20…+70 °C (-4…+158 °F)

(1) Includes offset, gain, non-linearity, and repeatability error terms

(2) Use this Conductor Category information for planning conductor routing. Refer to Industrial Automation Wiring and Grounding Guidelines, publication 1770-4.1.

1794-OE8H HART Enabled Analog 8 Output Module

The 1794-OE8H is a HART enabled analog output module that works with HART enabled field devices that use current in the 0...20 mA range. Use with 2 wire devices. This module provides wire-off detection on a per-channel basis.

This module can be used on ControlNet, EtherNet/IP, or PROFIBUS DP networks. One HART field device per channel.

HART Enabled Analog 8 Output Module

Specification	1794-OE8H
Output resolution	13 bit
Data format	Configurable
Output conversion type	—
Output conversion rate	10 ms for all channels
Step response to 99% of FS, output	13 ms to 99% of FS 115 ms during HART communication
Current load on voltage output, max	0…22 mA @ > 15V
Output current, resistive load	0…680 Ω @ 22 mA 0…770 Ω @ 20 mA
Accuracy	0.1% Full Scale @ 20 °C (68 °F)
Accuracy drift with temperature	0.010% Full Scale @ 20 °C (68 °F)

HART Enabled Analog 8 Output Module

Specification	1794-OE8H
Calibration	—
Isolation voltage	50V (continuous), Basic Insulation Type No isolation between individual channels
Power dissipation, max	6.1 W
Thermal dissipation, max	20.8 BTU/hr
Wire size	0.34…2.5 mm^2 (22...12 AWG) solid or stranded shielded copper wire rated at 75 °C (167 °F) or greater 1.2 mm (3/64 in.) insulation max
Wire category	2 – on signal ports 2 – on power ports(1)
Dimensions (HxWxD), approx	46 x 94 x 75 mm (1.8 x 3.7 x 2.95 in.) 94 x 94 x 91 mm (3.7 x 3.7 x 3.6 in.) installed
Temperature, operating	-20...+55 °C (-4...+131 °F)

(1) Use this Conductor Category information for planning conductor routing. Refer to Industrial Automation Wiring and Grounding Guidelines, publication 1770-4.1.

1794-OE12 Analog 12 Output Module

1794-OE12 module is a High Density analog output module, capable of providing current in the range of 0...20mA or voltage in the range of ±10V, depending on the user configuration. Out of Range status bit exists for each channel.

Analog 12 Output Module

Specification	1794-OE12
Output resolution	320 µV/cnt 0.641 µA/cnt
Data format	Configurable
Output conversion type	Digital to analog converter
Output conversion rate	Outputs: DAC
Step response to 63% of FS, output	~70% 1st convert 96% 2nd convert 100% 3rd convert
Current load on voltage output, max	3 mA
Output current, resistive load	0…750 Ω over full power supply range
Accuracy	Current Output: 0.1% Full Scale at 25 °C Voltage Output: 0.1% Full Scale at 25 °C
Accuracy drift w/temp	Current Output: 0.004% Full Scale/°C Voltage Output: 0.004% Full Scale/°C
Calibration	None required
Isolation voltage	50V (continuous), Basic Insulation Type Type tested at 850V DC for 60 s, between field side and system No isolation between individual channels

Analog 12 Output Module

Specification	1794-OE12
Power dissipation, max	4.0 W @ 31.2V DC 4.3 W @ 24V DC 4.0 W @ 10.0V DC
Thermal dissipation, max	14.7 BTU/hr @ 24V DC
Wire size	0.34…2.5 mm^2 (22...12 AWG) solid or stranded shielded copper wire rated at 75 °C (167 °F) or greater 1.2 mm (3/64 in.) insulation max
Wire category	2 – on signal ports 2 – on power ports(1)
Dimensions (HxWxD), approx	46 x 94 x 53 mm (1.8 x 3.7 x 3.1 in.) 94 x 94 x 69 mm (3.7 x 3.7 x 2.7 in.) installed
Temperature, operating	-20...+60 °C (-4...+140 °F)

(1) Use this Conductor Category information for planning conductor routing. Refer to Industrial Automation Wiring and Grounding Guidelines, publication 1770-4.1.

1794-OF4I and 1794-OF4IXT Isolated Analog 4 Output Module

The 1794-OF4I module provides 4 isolated outputs for 2-, 3-, and 4-wire output devices that use voltage in the range of ±10V or 0...20 mA current.

1794-OF4IXT is the extended temperature version of the 1794-OF4I module.

Isolated Analog 4 Output Module

Specification	1794-OF4I, 1794-OF4IXT
Output resolution	15 bit + sign 0.656 µA/cnt 0.320 mV/cnt
Data format	2's complement 2's complement percent binary offset binary
Output conversion type	Digital to analog converter
Output conversion rate	2.5/5.0 ms
Step response to 63% of FS, output	Current or voltage output: <25 µs
Current load on voltage output, max	3 mA
Output current, resistive load	0…750 Ω
Accuracy	Current input: 0.1% Full Scale @ 25 °C (77 °F) Voltage input: 0.1% Full Scale @ 25 °C (77 °F)(1)
Accuracy drift w/temp	Current input: 0.0025% Full Scale /°C Voltage input: 0.0012% Full Scale/°C
Calibration	Factory calibrated

Isolated Analog 4 Output Module

Specification	1794-OF4I, 1794-OF4IXT
Isolation voltage	120V (continuous), when used with 1794-TB2, 1794-TB3, 1794-TB3S, 1794-TB3T, or 1794-TB3TS 250V (continuous), when used with 1794-TBN Type tested at 1500V AC for 60 s, and 2550V DC for 1 s, channel to channel, I/O to system
Power dissipation, max	4.7 W @ 31.2V DC
Thermal dissipation, max	16 BTU/hr @ 31.2V DC
Wire size	0.34... 2.5 mm^2 (22...12 AWG) solid or stranded shielded copper wire rated at 75 °C (167 °F) or greater 1.2 mm (3/64 in.) insulation max
Wire category	2 – on signal ports 3 – on power ports(2)
Dimensions (HxWxD), approx	**1794-OF4I:** 46 x 94 x 53 mm (1.8 x 3.7 x 3.1 in.) 94 x 94 x 69 mm (3.7 x 3.7 x 2.7 in.) installed **1794-OF4IXT:** 46 x 94 x 75 mm (1.8 x 3.7 x 2.95 in.) 94 x 94 x 91 mm (3.7 x 3.7 x 3.6 in.) installed
Temperature, operating	**1794-OF4I:** -20…+55 °C (-4…+131 °F) **1794-OF4IXT:** -20…+70 °C (-4…+158 °F)

(1) Includes offset, gain, non-linearity, and repeatability error terms

(2) Use this Conductor Category information for planning conductor routing. Refer to Industrial Automation Wiring and Grounding Guidelines, publication 1770-4.1.

1794-OF8IH HART Isolated Analog 8 Output Module

The 1794-OF8IH modules provides 8 HART enabled isolated outputs for 2-, 3-, and 4-wire output devices that use voltage in the range of ±10V or 0...20 mA current.

HART Enabled Isolated Analog 8 Output Module

Specification	1794-OF8IH
Output resolution	16 bits – unipolar 0.305 µA/cnt unipolar
Data format	Engineering units Percent of Full Scale RAW/proportional count
Output conversion type	16 Bit Digital to Analog Converter
Output conversion rate	10 ms
Step response to 63% of FS, output	< 70 ms
Output current, resistive load	0…750 Ω
Accuracy	± 0.1% Full Scale at 25 °C ± 0.35% Full Scale at 0…55 °C
Accuracy drift w/temp	± 0.008% /ºC 0.0038 Full Scale /°C
Calibration	Factory calibrated

HART Enabled Isolated Analog 8 Output Module

Specification	1794-OF8IH
Isolation voltage	120V (continuous), Basic Insulation Type Type tested at 1000V AC for 60 s, between user power to system, channel to system, and channel to channel
Power dissipation, max	5.0 W @ 31.2V DC
Thermal dissipation, max	16 BTU/hr @ 31.2V DC
Wire size	0.34... 2.5 mm^2 (22...12 AWG) solid or stranded shielded copper wire rated at 75 °C (167 °F) or greater 1.2 mm (3/64 in.) insulation max
Wire category	2 – on signal ports 3 – on power ports(1)
Dimensions (HxWxD), approx	46 x 94 x 75 mm (1.8 x 3.7 x 2.95 in.) 94 x 94 x 91 mm (3.7 x 3.7 x 3.6 in.) installed
Temperature, operating	0…55 °C (32…131 °F)

(1) Use this Conductor Category information for planning conductor routing. Refer to Industrial Automation Wiring and Grounding Guidelines, publication 1770-4.1.

FLEX I/O Counter Modules

In order to decide which FLEX I/O counter module would best suit your application needs, you should identify the following:

- What type of application the module will be used for
- What field devices, signal levels, and signal type are being connected to the counter module

Counter Module Comparison

Catalog Number	Application	Network Capability	Number of Inputs/ Outputs	External DC Supply Current, Nom	Power Dissipation, Max	Thermal Dissipation, Max
1794-IJ2 1794-IJ2XT	Rational control, including: • turbine generators • motors • drives • gears • shaft	All networks supported by FLEX I/O	2 Input 2 Output	220 mA @ 19.2V DC 180 mA @ 24V DC 140 mA @ 31.2V DC	4.5 W @ 31.2V DC	15.3 BTU/hr @ 31.2V DC
1794-VHSC	Applications including: • packaging • material handling • flow monitoring • cut-to-length • motor speed control • monitoring	ControlNet: • 1794-ACN15 • 1794-ACNR15 EtherNet/IP: • 1794-AENT • 1794-AENTR	2 Input 2 Output	100 mA @ 24V DC(1)	5 W @ 31.2V DC	17.1 BTU/hr @ 31.2V DC

Counter Module Comparison

Catalog Number	Application	Network Capability	Number of Inputs/ Outputs	External DC Supply Current, Nom	Power Dissipation, Max	Thermal Dissipation, Max
1794-ID2	Applications including: • quality counting • positioning • speed calculations	All networks supported by FLEX I/O	2 Input	150 mA @ 12V DC 75 mA @ 24V DC	5.0 W @ 26.4V DC	17.1 BTU/hr @ 26.4V DC
1794-IP4	Applications including: • counting pulse from flow meters • counting pulse from density meters • quality counting • speed calculations		4 Input			

(1) Does not represent power required to supply the inputs or outputs

1794-IJ2 and 1794-IJ2XT 24V DC Input Frequency Module

The 1794-IJ2 is essentially a tachometer with the capability of reporting frequency, acceleration, and direction. Outputs are activated by alarms. Input devices range from magnetic pickup to flowmeters, to incremental encoders to proximity detectors. This intelligent I/O module is designed to perform high-speed frequency algorithms. The module provides 2 frequency inputs, 2 gate inputs, and 2 outputs. The frequency inputs are capable of accepting frequencies up to 32 KHz. The module accepts and returns binary data.

The 1794-IJ2 measures frequency over a user-specified time interval. A frequency calculation can start before the time interval has elapsed, if a user-specified number of frequency input pulses have occurred.

The module's primary target is high-speed, accurate frequency measurement. As such, a high-speed internal clock is synchronized with the frequency input to count over a user-selected sampling time or a user-defined number of frequency input pulses.

Power to the module is supplied from the external power supply. All power for input devices (24V DC) is supplied by the I/O module. Outputs are used to set alarms depending on the input conditions.

The 1794-IJ2 module accepts the following frequency inputs:

- 24V DC IEC1+ proximity switch as defined by standard IEC 1131-2
- 24V DC contact switch with wire off capability
- 500 mV AC magnetic pickup
- 50 mV AC magnetic pickup
- 6V AC vortex
- 3V AC vortex

The 1794-IJ2 module accepts the following gate inputs:

- 24V DC IEC1+ proximity switch as defined by standard IEC 1131-2
- 24V DC contact switch
- 500 mV AC magnetic pickup
- 50 mV AC magnetic pickup

Customer supplied power, ranging from 10...31.2V DC, is connected internally to the power output transistor. When an output is turned on, current flows into the source out of the drain, through the load connected to the ground of the customer supply (customer return). Diode D6 protects the power output transistors from damage due to inductive loads. Output Q1 is a thermally protected FET and will turn off at 3 A (approximately). After an output goes into thermal shutdown, you must fix the cause of the shutdown and toggle the outputs ON and OFF to reenergize the output. RT1 protects D6 and Q1 if power supply polarity is reversed.

The frequency input module isolated power supply consists of 1 isolated 24V DC power supply that provides 2 current limited outputs of 30 mA maximum (1 for each channel).

24V DC Input Frequency Module

Specification	1794-IJ2, 1794-IJ2XT
Processing time	≤ 4 ms
Input frequency, max	1…32 kHz w/sine wave 1…32 kHz w/square wave input
Frequency value, max	32,767 or 3,276.7 (dependent on range)
Input pulse width, min	20 μs
Voltage, on-state input, min	10V (24V IEC+1 proximity, encoder input or switch inputs)
Voltage, on-state input, nom	24V DC
Voltage, on-state input, max	Limited to isolated 24V DC power supply
Current, on-state input, min	2.0 mA
Current, on-state input, nom	9.0 mA
Current, on-state input, max	10.0 mA
Voltage, off-state input, max	5.0V DC on 24V DC IECI + terminal
Current, off-state input, max	1.5 mA into 24V DC IECI + terminal
Wire-off detection	0.4 mA for proximity, encoder, or contact switch with 50 kW shunt resistor
Impedance, frequency input	>5 kΩ for 50 mV extended magnetic pickup >5 kΩ for 500 mV magnetic pickup >10 kΩ for 3V vortex flowmeter >10 kΩ for 6V vortex flowmeter >2.5 kΩ for 24V DC IEC1+ proximity or encoder input >2.5 kΩ for 24V DC contact switch input
Impedance, gate input	>5 kΩ for 50 mV extended magnetic pickup >5 kΩ for 500 mV magnetic pickup >2.5 kΩ for 24V DC IEC1+ proximity or encoder input >2.5 kΩ for 24V DC contact switch input
Output voltage source	Customer supplied
Voltage, on-state output, min	10V DC
Voltage, on-state output, nom	24V DC
Voltage, on-state output, max	31.2V DC
Current, on-state output, min	1.0 mA per output
Current, on-state output, max	1.0 A per channel sourced out of module(1)
Output surge current, max	2 A for 50 ms, repeatable every 2 s
Voltage drop, on-state output, max	0.9V DC @ 1 A
Output control	Outputs individually assignable to: Frequency % Full Scale Acceleration alarm
Output switching time	Triggered by frequency alarm or acceleration alarm Turn On: < 0.5 ms Turn Off: < 1 ms

24V DC Input Frequency Module

Specification	1794-IJ2, 1794-IJ2XT
Dimensions (HxWxD), approx	46 x 94 x 53 mm (1.8 x 3.7 x 3.1 in.) 94 x 94 x 69 mm (3.7 x 3.7 x 2.7 in.) installed
Temperature, operating	**1794-IJ2:** -20…+55 °C (-4…+131 °F) **1794-IJ2XT:** -20…+70 °C (-4…+158 °F)

(1) Current Limited: All outputs can be on simultaneously without derating.

1794-VHSC 2 Channel Very High Speed Counter Module

A counter module has two incremental quadrature encoder interfaces each with three inputs (A, B, and Z). Each input module has ± inputs for connection to pulse transmitters with complementary or non-complementary signals.

The counter can count pulses of one or two pulse trains for up/down counting and detection of a selectable number of edges (X1, X2, X4). Each of the two counters has an upper limit of 1 MHz, a 24-bit counter register, a preset register, and a latch register.

Power to the module is supplied from an external 24V power supply. The 1794-VHSC has two outputs that can be configured for overlapping, multiple windows, and/or pulse-width modulation.

2 Channel Very High Speed Counter Module

Specification	1794-VHSC
Input groups	2 groups of A/A, B/B, and Z/Z pairs with 5V DC or 15…24V DC terminations
Input frequency, max	1.0 MHz counter and encoder X1 (no filters) 500 kHz encoder X2 (no filters) 250 kHz encoder X4 (no filters)
Voltage, on-state input, min	5V DC terminations: >2.6V DC 15…24V DC terminations: >12.5V DC
Voltage, on-state input, max	5V DC terminations: ±6V 15…24V DC terminations: Refer to derating curve
Voltage, off-state input, min	5V DC terminations: ≤ 1.25V DC 15…24V DC terminations: ≤ 1.8V DC
Current, on-state input, min	>5 mA
Current, on-state input, max	≤ 0.250 mA
Input filter selections	5: Off, 10 μs, 100 μs, 1.0 ms, 10.0 ms per A/B/Z group
Output control	Outputs can be tied to 8 compare windows
Output supply voltage range	5…7V DC or 10…31V DC
Leakage current, off-state output, max	≤ 0.3 mA
Voltage drop, on-state output, max	5V operation – 0.5 A 12…24V operation – 1.0 A

2 Channel Very High Speed Counter Module

Specification	1794-VHSC
Current, on-state output, max	5V operation – 0.5 A 12…24V operation – 1.0 A
Current per output pair, max	5V operation – 0.9 A 12…24V operation – 4.0 A
Short circuit current	5V operation – 0.9V DC @ 0.5 A(1) 12…24V operation – 0.9V DC @ 1.0 A
Output delay time, OFF to ON	25 μs (load dependent)
Output delay time, ON to OFF	150 μs (load dependent)
Dimensions (HxWxD), approx	46 x 94 x 53 mm (1.8 x 3.7 x 3.1 in.) 94 x 94 x 69 mm (3.7 x 3.7 x 2.7 in.) installed
Temperature, operating	0…55 °C (32…131 °F)

(1) Outputs are short circuit protected and turned off until power is cycled.

1794-VHSC Derating Curve

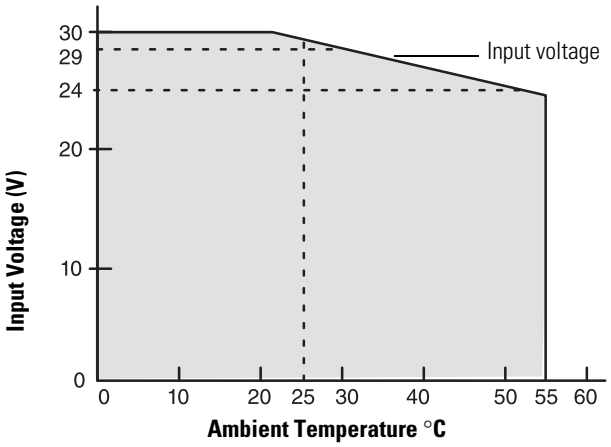

The area within the curve represents the safe operating range for the module under various conditions of user supplied 24V DC supply voltages and ambient temperatures. This includes all possible mounting positions, including inverted horizontal.

= Safe operating area

1794-ID2 2 Input Pulse Counter Module

The 1794-ID2 module is a 2-channel counter used in applications where pulse counting is required. Typical input devices include quadrature incremental encoders with or without reference and/or gate function and pulse transmitters. You can use one or two pulse trains.

2 Input Pulse Counter Module

Specification	1794-ID2
Input pulse width	Each signal condition must be stable for at least 2 ms to be recognized
Input groups	2 groups of A, B, Z, G inputs
Counting frequency, max	100 kHz
Cable type	Input: Belden 8761
Wire category	2(1)
Conductor length, max	304.8 m (1000 ft)
Input signal range	3 mA @ 6V DC 9 mA @ 12V DC 15 mA @ 24V DC
Dimensions (WxHxD), approx	46 x 94 x 53 mm (1.8 x 3.7 x 3.1 in.) 94 x 94 x 69 mm (3.7 x 3.7 x 2.7 in.) installed
Temperature, operating	0…55 °C (32…131 °F)

(1) Use this Conductor Category information for planning conductor routing. Refer to Industrial Automation Wiring and Grounding Guidelines, publication 1770-4.1.

1794-IP4 4 Input Pulse Counter Module

The pulse counter modules perform high-speed scaling, calculation operations for various industrial applications. Some sample applications include:

- quantity counting
- speed calculation
- flow monitoring

All the input devices for the pulse counter module should be able to provide the input signal of 6V amplitude. The 1794-IP4 has a 6V minimum threshold for an input ON condition and a maximum 3V threshold for an input OFF condition. The region between 3V and 6V is a transitional one and therefore requires input signals to pass cleanly through that region.

4 Input Pulse Counter Module

Specification	1794-IP4
Counting frequency, max	100 kHz(1)
Input frequency, max	100
Input signal range	3 mA @ 6V DC 9 mA @ 12V DC 15 mA @ 24V DC
Overflow	Maximum period – 65 ms when 1 MHz internal clock selected Maximum period – 6.5 ms when 10 MHz internal clock selected
Dimensions (WxHxD), approx	46 x 94 x 53 mm (1.8 x 3.7 x 3.1 in.) 94 x 94 x 69 mm (3.7 x 3.7 x 2.7 in.) installed
Temperature, operating	0…55 °C (32…131 °F)

(1) Each signal condition must be stable for at least 2 ms to be recognized.

Select a FLEX I/O Terminal Base Unit

Step 3 – Select:

the appropriate terminal base unit for your module and system

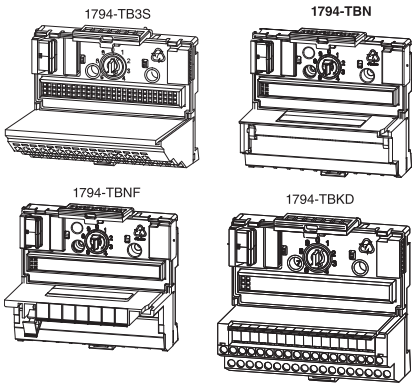

Each FLEX I/O module requires a terminal base unit that snaps onto the DIN rail to the right of the I/O adapter. The terminal bases provide terminal connection points for the I/O wiring and plug together to form the backplane. They are available with screw, clamp, or spring terminations.

Common Terminal Base Characteristics

Current Capacity, max	Wire Size	Dimensions (HxWxD)
10	0.34…3.3 mm^2 (22…12 AWG) solid or stranded copper wire rated at 75 °C (167 °F) or greater, 1.2 mm (3/64 in.) insulation max	94 x 94 x 69 mm 3.7 x 3.7 x 2.7 in. **1794-TB37DS and 1794-TB62DS*** (1) 127 x 94 x 69 mm 5.0 x 3.7 x 2.7 in

(1) Measured with expansion module installed.

The following table is a comparison of general specifications for each FLEX I/O terminal base unit. For compatibility with FLEX I/O modules, see Table Digital I/O Module Summary on page 24.

General Specification Comparison

Catalog(1)	Termination Type	Connections	Used in Applications	Current Capacity, max	Wiring Category	Purpose	Temperature, operating
1794-TB2	Cage clamp	16 I/O; 18 common; 2 +V	Up to 132V AC/156V DC	10	2	A generic 2-wire version of the 1794-TB3.	-20…+55 °C (-4…+131 °F)
1794-TB3, 1794-TB3K(2)		16 I/O; 18 common; 18 +V			Module dependent	Primarily intended for use with input modules when using 3-wire input proximity switches – can also be used with output modules.	-20…+70 °C (-4…+158 °F)
1794-TB3S, 1794-TB3SK	Spring clamp					A spring clamp version of the 1794-TB3 – provides faster, simpler wire installation.	
1794-TB32	Cage clamp	32 I/O; 8 common; 8 +V	Up to 31.2V DC			A 32-point version of the 1794-TB3 to be used with 32-point digital modules and the 1794-IB16D module.	
1794-TB32S	Spring clamp					A spring clamp version of the 1794-TB32.	
1794-TB3G, 1794-TB3GK(2)	Grounded screw clamp	36 I/O; 2 common; 2 +V; 10 chassis ground				A screw clamp terminal base unit with individual grounding used with certain analog modules.	
1794-TB3GS, 1794-TB3GSK(2)	Grounded spring clamp				2	A spring clamp version of the 1794-TB3G.	

General Specification Comparison

Catalog[1]	Termination Type	Connections	Used in Applications	Current Capacity, max	Wiring Category	Purpose	Temperature, operating
1794-TB3T, 1794-TB3TK	Cage clamp, temperature	16 I/O; 10 common; 4 +V; 8 chassis ground; 2 sets of CJC for temperature modules	Up to 132V AC/156V DC	10	Module dependent	A cage clamp terminal base to be used with the 1794-IT8 or 1794-IRT8 module (when used in thermocouple mode) – also provides chassis ground connections for the 1794-IR8 and analog modules.	-20…+70 °C (-4…+158 °F)
1794-TB3GT	Cage clamp, grounded			V/COM terminals: 10 A I/O terminals: 2 A			
1794-TB3TS, 1794-TB3TSK[2]	Spring clamp, temperature	16 I/O; 10 common; 4 +V; 8 chassis ground; 2 sets of CJC for temperature modules	Up to 132V AC/156V DC	10	2	A spring clamp version of the 1794-TB3T.	-20…+70 °C (-4…+158 °F)
1794-TBKD[3]	Cage clamp, knife disconnect	16 I/O; 18 common; 2 +V	—		Module dependent	A cage clamp terminal base with 16 knife disconnects.	0…55 °C (32…131 °F)
1794-TBN, 1794-TBNK[2]	Screw clamp, NEMA-style	16 I/O; 2 common; 2 +V	264V AC/DC			A NEMA-style screw clamp terminal base for larger gauge wires with a cover for I/O wiring.	-20…+70 °C (-4…+158 °F)
1794-TBNF	Screw clamp, fused NEMA-style					Provides eight 5 x 20 mm fused, screw terminals with a cover for I/O wiring – shipped with fuses for the 1794-OA8 module; can be used to fuse the 1794-OM8 and 1794-OW8 modules with a replacement fuse.[4]	-20…+55 °C (-4…+131 °F)
1794-TB37DS	D-shell	37 Pin; digital and analog	—		Module dependent	A 37-pin D-shell termination for both digital and analog modules.	0…55 °C (32…131 °F)
1794-TB62DS		62 Point;				A 62-pin D-shell termination for both digital and analog modules.	

(1) Isolation voltage, channel to channel, is determined by the insert module. Use this conductor category information for planning conductor routing. Refer to Industrial Automation Wiring and Grounding Guidelines, publication 1770-4.1.

(2) The letter K in the last position of the catalog number, before the series designation, indicates a conformal coated versions of standard modules and can be used with extended temperature modules (modules ending in -XT).

(3) Discontinued catalogs may not have updated specifications. For more information about a specific discontinued catalog, refer to individual installation instructions.

(4) Contains eight 5 x 20 mm fuses (one for each even-numbered terminal – 0…14 on row B). Shipped with 1.6 A, 250V AC Slow Blow fuse suitable for the 1794-OA8 AC output module. Refer to individual installation instructions for fusing recommendations for other modules. Littlefuse PN23901.6 A-B PN94171304, SAN-O PNSD6-1.6A.

Select a FLEX I/O Power Supply

Step 4 – Select:

if power consumption exceeds the maximum for a single power supply, install additional power supplies

FLEX I/O modules are interfaced to the I/O link through a FLEX I/O adapter module with a built-in 24V DC input power supply. The FLEX I/O modules receive power from the adapter/power supply through the backplane. The 120V AC to 24V DC power supply (1794-PS13 or 1794-PS3) is also available for powering the adapter/power supply.

General Specification Comparison

Catalog	Power Supply Input Voltage, nom	Power Supply Input Power	Apparent Input Power, max	Transformer Load, max	Output Current, max	Output Voltage, nom	Dimensions (HxWxD), approx
1794-PS3	120V/220V AC	86 W	205 VA	250 VA	3.0 A	24V DC	87 x 94 x 69 mm (3.4 x 3.7 x 2.7 in.)
1794-PS13		36 W	53 VA	90 VA	1.3 A		87 x 69 x 69 mm (3.4 x 2.7 x 2.7 in.)

Power Supply Definitions

Module Supply Voltage — This is typically either 120V AC or 24V DC nominal voltage that is supplied from an external power source wired to the module terminal base unit.

All Flex I/O adapters provide internal power to the maximum possible number of 8 Flex I/O modules. Power supply modules are required to provide 24V to the adapters.

The 1794-PS13 power supply is capable of supplying a maximum of 1.3 A at 24V DC. The output surge current is sufficient to drive four adapters with a surge of 23 A for 2 ms each operating at 24V DC.

The 1794-PS3 power supply is capable of supplying a maximum of 3 A(1) at 24V DC. The output surge current is sufficient to drive six adapters with a surge of 23 A for 2 ms each operating at 24V DC.

Non-Allen-Bradley DC power supplies can also be used, but should operate within the specifications for the devices they are powering. Size the power supply by calculating the total current consumed by summing the currents for each of the modules used for the power supply operating voltage applied.

(1) This refers to horizontal mounting: 2.8 A maximum for all other mountings. Refer to the derating curve in the installation instructions for that module.

The 1606 switched mode power supplies are capable of supplying a maximum of up to 40 A at 24V DC and can be used as an alternative when more power is needed.

Digital Input Modules require supplied 24V DC (19.2...31.2V DC) and consume the currents listed in the module specifications.

Digital Output Modules require supplied 24V DC (19.2...31.2V DC) and consume the currents listed in the module specifications plus the total current consumed by their loads. The load current is limited by the maximum load current and surge listed.

Combination Digital Modules have a combination of inputs and outputs. The current load should be determined as described for the combined input and output specifications listed.

Analog Input Modules require supplied 24V DC (19.2...31.2V DC) and consume the currents listed in the module specifications. In addition, adequate power must be supplied to the 1794-IE8 and 1794-IF4I transmitters to deliver input terminal voltage or drive 20 mA into the input impedance listed. This power source may be the same as the module power and can be included in the power supply calculated.

Analog Output Modules require supplied 24V DC (19.2...31.2V DC) and consume the currents listed plus the total current consumed by their loads. The load current is limited by maximum current or resistive load permitted per channel.

Combination Analog Modules have a combination of analog inputs and outputs. The current load should be determined as described previously for the combined modules and output specifications listed. The output load current is limited by the maximum current or resistive load permitted per channel. In addition, adequate power must be supplied to the 1794-IE8 and 1794-IF4I transmitters to deliver input terminal voltage or drive 20 mA into the input impedance listed. This power source may be the same as the module power and can be included in the power supply calculation.

Counter Modules require module power, transmitter input power, and in some cases output load power. If output load power is required, use a separate power supply for output load power for noise immunity.

Power Requirements and Transformer Sizing

- Use the real power value in watts for determining the amount of heat dissipation you will have inside the enclosure.
- Use the apparent power value in VA for estimated power distribution sizing.
- Use the transformer load value in VA of each power supply plus all other loads on a transformer to determine the required transformer size.

1794-PS3 AC/DC

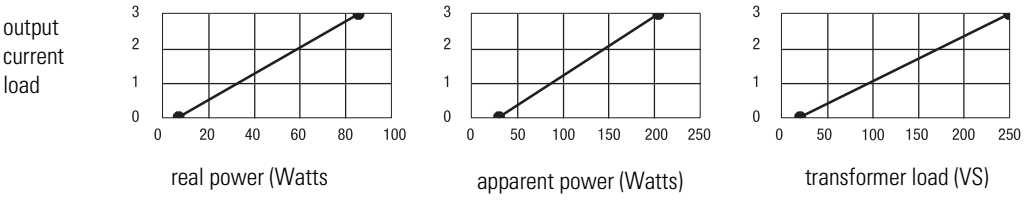

1794-PS13 AC/DC

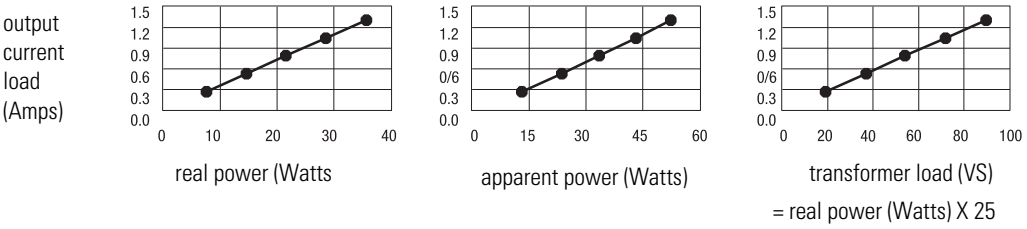

Notes:

About the FLEX Ex I/O Systems

1797 FLEX Ex I/O Overview

FLEX Ex™ I/O offers:

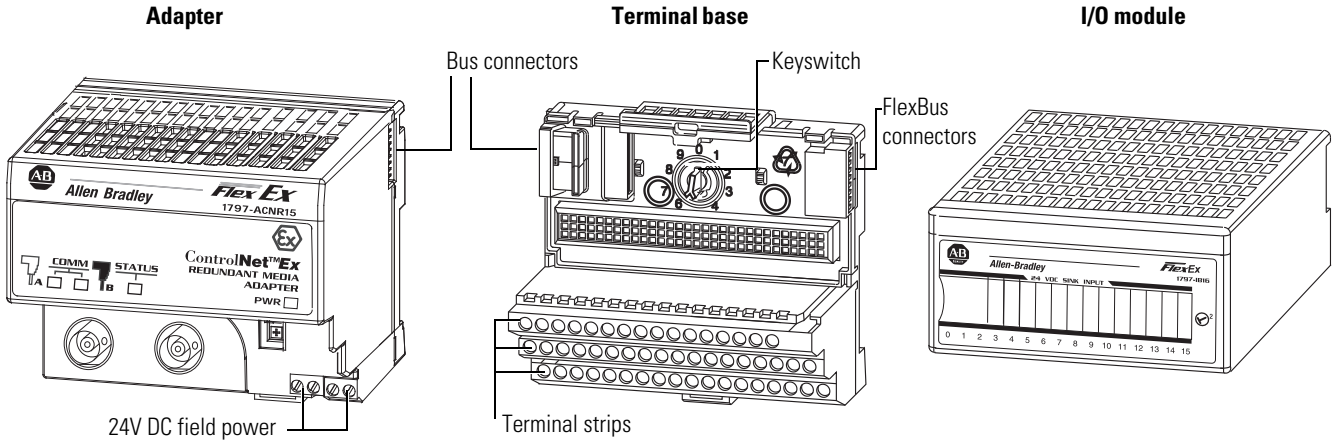

FLEX Ex I/O leverages advanced technologies allowing the application to move to a distributed architecture in the hazardous area. We have taken our experience gained with the standard FLEX I/O system and used it to create an intrinsically safe system with the same look, feel, and ease of use.

Mounts without purged or explosion-proof enclosures in the hazardous area. FLEX Ex I/O is a modular I/O system that eliminates the need for Intrinsic Safety (IS) barriers/isolators or long wiring runs to the control cabinet.

One adapter communicates with up to eight I/O modules. Allows connection to:

- 128 digital inputs/outputs, or
- 64 analog inputs, or
- mix to meet your needs.

Redundant media ControlNet adapter communicates with up to eight I/O modules and can be mounted in the hazardous area.

Adjust the keyswitch to prevent incorrect module insertion into a preconfigured terminal base.

Exchange terminal bases without moving other bases in your system.

Connect FLEX Ex power supplies to the terminal base that provides power to the I/O modules and field devices. No additional power supplies are needed.

Plug the I/O module into the terminal base. Use the module to connect to the I/O bus and field devices.

Remove and insert modules under power. No direct wiring to the module enables you to change modules without disturbing field wiring or system power.

Mix and match I/O modules. Wide variety of digital, analog, temperature, frequency, and HART modules.

FlexBus Isolator allows connection to standard FLEX I/O adapters and I/O thus providing a choice of other networks.

Conformal coating on all modules meets the noxious gas requirement of ISAS71.04-1985 severity level G3 for hydrogen sulfide, sulfur dioxide, chlorine, nitrogen dioxide, hydrogen fluoride, ammonia, and ozone.

FLEX Ex combines a terminal strip and intrinsic-safety isolation with an I/O interface. Use the terminal strip on the terminal base to wire your field devices directly. The FLEX Ex design also offers these features:

- modularity for distributed IS systems
- all of the features of a larger, rack-based system
- installation near the field devices to reduce wiring costs and complexity
- terminations for field wiring eliminating the need for marshalling or extra terminal strips
- ControlNet-based networking solution in the hazardous area with ControlNet Ex products
- DIN-rail mounting

FLEX Ex provides additional value if system problems develop. The terminal base lets you remove and insert I/O modules under power without rewiring or disrupting your system. Combining your field-wiring terminations, IS isolation, and the I/O interface into the same location saves you time, money, and makes your system easier to maintain and troubleshoot. Additional benefits include:

- galvanic isolation between the I/O backplane, input circuitry, and power supply
- dual-fault protection IS circuits provide the highest fault tolerance
- I/O circuitry provides full IS field-device protection
- the modules themselves are IS protected for installation in hazardous environments

FLEX Ex I/O modules may be removed and inserted while operating under power. Network module maintenance and cable connections can be made in the hazardous area while the system is in operation and the area is hazardous.

FLEX Ex Typical Configurations

The following are typical configurations of FLEX Ex I/O in an intrinsically safe system:

- FLEX Ex I/O modules are interfaced through a ControlNet Ex I/O adapter module to a coax ControlNet segment that is confined to the hazardous area. This coax ControlNet Ex segment is interfaced through a ControlNet Ex coax drop repeater module and ControlNet Ex fiber media port adapter to a fiber-optic ControlNet segment, which is fed through from the safe area. A FLEX Ex power supply powers the repeater module, fiber media port adapter, ControlNet Ex I/O adapter module, and I/O modules individually. This configuration is best for long distances and a large number of nodes.
- The FLEX Ex ControlNet barrier allows connection to a ControlNet Ex I/O adapter module in the hazardous area via coax directly from the safe area. The barrier is mounted in the safe area. This is more economical for intermediate distances and nodes.
- Sensors and actuators in a hazardous area can be connected to FLEX Ex I/O modules, which are connected through a bus isolator module and connector to a FLEX I/O adapter in a safe area thus allowing connectivity to DeviceNet, ControlNet, Universal Remote I/O, and EtherNet/IP. This configuration may be most economical for low-point applications or when networks other than ControlNet are required.
- FLEX Ex I/O modules in a hazardous area can be connected through an extender cable to a FlexBus feed-through connector in an explosion-proof enclosure. Inside the enclosure, the feed-through connector is connected through a FLEX Ex extender cable, and then a bus isolator module and connector, to a FLEX I/O adapter.

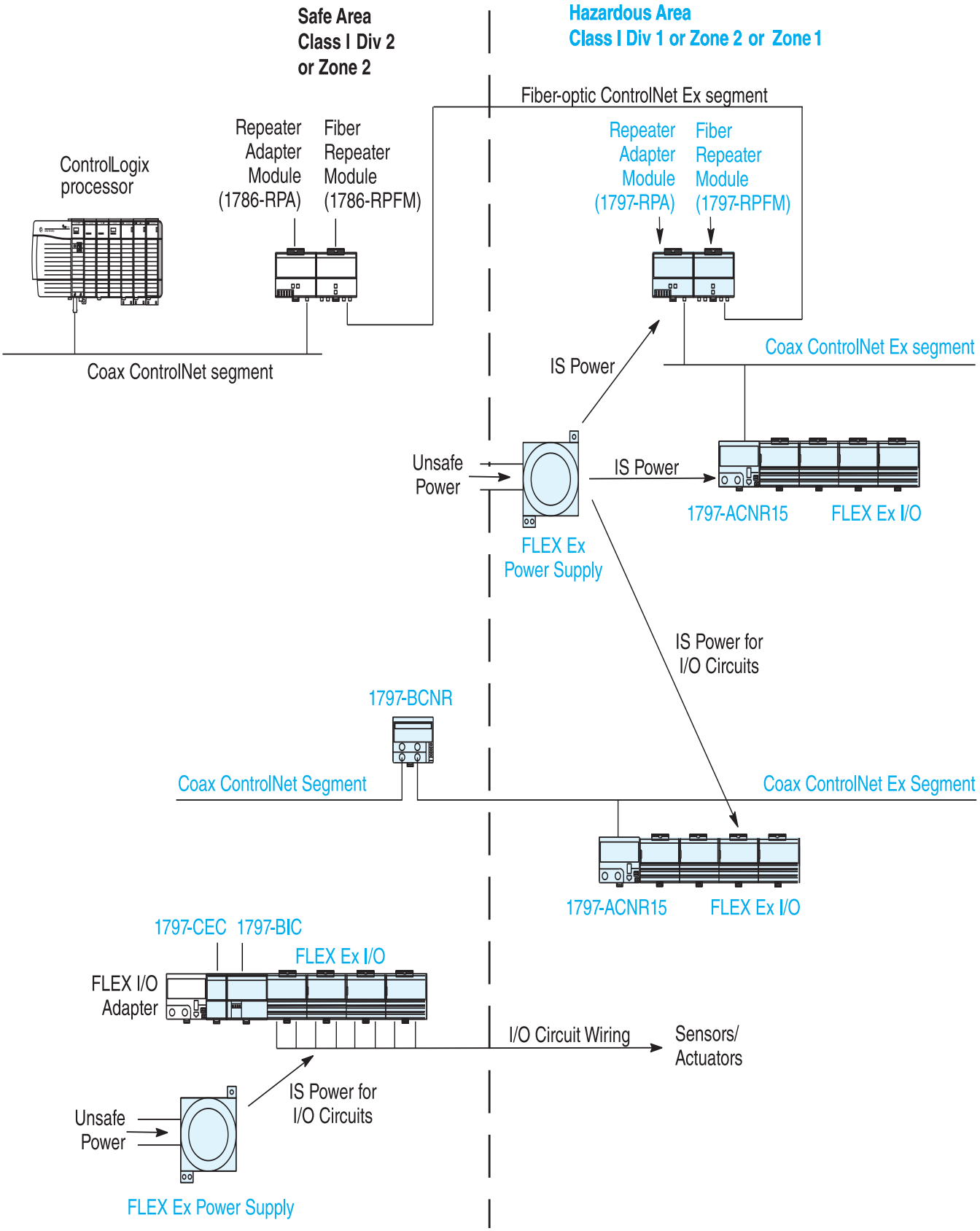
Safe Area
Class I Div 2
or Zone 2
Hazardous Area
Class I Div 1 or Zone 2 or Zone 1
Fiber-optic ControlNet Ex segment
ControlLogix
processor
Repeater
Adapter
Module
(1786-RPA)
Fiber
Repeater
Module
(1786-RPFM)
Repeater
Adapter
Module
(1797-RPA)
Fiber
Repeater
Module
(1797-RPFM)
Coax ControlNet segment
Coax ControlNet Ex segment
IS Power
Unsafe
Power
IS Power
1797-ACNR15
FLEX Ex I/O
FLEX Ex
Power Supply
IS Power for
I/O Circuits
1797-BCNR
Coax ControlNet Segment
Coax ControlNet Ex Segment
1797-ACNR15
FLEX Ex I/O
1797-CEC
1797-BIC
FLEX Ex I/O
FLEX I/O
Adapter
I/O Circuit Wiring
Sensors/
Actuators
IS Power for
I/O Circuits
Unsafe
Power
FLEX Ex Power Supply

Entity-Based Architecture

Entity parameters provide a system of quantifying and matching safe levels for voltage, current, inductance, and capacitance when connecting intrinsically safe field devices and system devices together.

Configuration of the FLEX Ex system is based on the entity parameter method. Using entity parameters allows high system flexibility in matching field and system devices. This provides maximum utility to the IS system designer and installer. For more information, refer to the FLEX Ex System Certification Reference Manual, publication 1797-RM001.

Hazardous Area Designation

A hazardous area is designated as any location in which a combustible material is or may be present in the atmosphere in sufficient concentration to produce an ignitable mixture.

The North American method identifies these areas by Class, Division, and Group while the IEC (CENELEC) designates these areas by Zone and Gas Group.

Recently, North America has adopted the Zone method of identifying hazardous locations as an option to the Division method.

Class Designation

Class identifies the type of hazardous atmosphere.

Class I	Gas or vapor
Class II	Dust
Class III	Fiber or flying (no group designation)

Division/Zone Designations

Division/Zone identifies the likelihood of a hazardous atmosphere being present.

	Division Method (North America)	IEC Standard Zone Method
Ignitable mixture present continuously (long periods)	Division 1	Zone 0 (Zone 20 - Dust)
Ignitable mixture present intermittently		Zone 1 (Zone 21 - Dust)
Ignitable mixture is not normally present	Division 2	Zone 2 (Zone 22 - Dust)

Gas/Dust Groups

Hazardous locations are grouped according to their ignition properties.

Typical Gas	North American Gas Group	IEC Gas Group
Acetylene	A	IIC
Hydrogen	B	
Ethylene	C	IIB
Propane	D	IIA
Methane[1]	D	I
Metal dust	E	—
Coal dust	F	
Grain dust	G	

(1) Mining applications under jurisdiction of MSHA.

Use in North American Hazardous Locations

FLEX Ex modules are rated for installation in Class I Division 1 & 2, Groups A-D hazardous areas. They are also rated to connect to field devices that are located in Class I, II, or III, Groups A-G hazardous areas.

If FLEX Ex components are to be installed in a Class II or III location in your application, you must mount them in a suitable, dust-proof enclosure with the appropriate connectors, glans, and seals. For example, a NEMA 9 enclosure may be appropriate. The FLEX Ex modules are rated to connect to devices located in Class II or III locations.

FLEX Ex modules are rated for installation in North American Class I Zone 1 & 2, Groups IIC, IIB, & IIA hazardous areas. They are also rated to connect to field devices that are located in North American Class I Zone 0, 1, & 2, Groups IIC, IIB, & IIA hazardous areas.

As always, observe local code requirements when applying your FLEX Ex application. For more information, refer to the FLEX Ex System Certification Reference Manual, publication 1797-RM001.

Use in ATEX Hazardous Locations

FLEX Ex modules are rated for installation in European Zones 1, 2 and 22. They are also rated to connect to field devices that are located in European Zones 0, 1, 2, 21 and 22 hazardous areas. The FLEX Ex power supplies (1797-PS1E and -PS2E2) are rated for use in Zone 1 and 22.

If FLEX Ex components are to be installed in a European Zone method dust or fiber location in your application, you must mount them in an approved, dust-proof enclosure with the appropriate connectors, glans, and seals. Pepperl+Fuchs have three cabinets that are approved for use with FLEX Ex components in Zone 22 applications: IVK2-ISRPI-V8LC; IVK2-ISRPI-V8HYW; and IVK2-ISRPI-V16LC. P+F has offices in Twinsburg, Ohio, USA, and Mannheim, Germany. See their website at www.pepperl-fuchs.com.

As always, observe local code requirements when applying your FLEX Ex application. For more information and full certification, refer to the FLEX Ex System Certification Reference Manual, publication 1797-RM001.

Specify a FLEX Ex System

Follow these steps as you specify your FLEX Ex I/O system:

?	Step	See	Page
	1 Select an adapter and distribution method Choose an adapter and fiber hub or coax barrier to distribute FLEX Ex into the hazardous area. Or, choose a bus isolator pair to connect to various networks.	Select FLEX Ex I/O Communication Adapters and Distribution Method	89
		1797-RPFM ControlNet Ex 3 km Fiber Media Port Adapter	92
		1797-BCNR Coax Barrier Module	92
		1797-BIC Bus Isolator Module and 1797-CEC FlexBus Connector	94
	2 Determine the I/O devices • location of the device • number of points needed • appropriate catalog number • number of points available per module • number of modules	Digital I/O Modules	97
		Analog Modules	101
		HART Interface Modules	105
		Counter I/O Module	108
	3 Select a terminal base Choose an appropriate terminal base for your modules.	Terminal Base Wiring Diagrams	111
	4 Select power supplies • Choose appropriate power supply • Ensure sufficient power for the communication adapter and modules	Select a FLEX Ex I/O Power Supply	113
		Understanding System Planning	114
		Assigning Power Supplies	116
		Hazardous Area Installation	117
		General Specification Comparison	113
	5 Select optional accessories • Determine whether to panel mount or DIN rail mount the FLEX I/O system and at what orientation (horizontal or vertical) • Choose appropriate optional accessories to enhance your system	Mount the FLEX System	121
		1794-CE1 and 1794-CE3 Extender Cables	123
		1797-BOOT ControlNet BNC Boot	125
		1797-INS Trunk Insulator and 1797-EXMK Marking Kit	125
		ControlNet Ex Taps	126

Notes:

Select FLEX Ex I/O Communication Adapters and Distribution Method

Step 1 – Select:

the communication adapter for the ControlNet Ex network the coax barrier to distribute into hazardous areas

The diagnostic capabilities and determinism of the ControlNet network make it an ideal choice for distributing I/O into hazardous area applications.

The redundant media ControlNet Ex communications adapter (1797-ACNR15) is high speed and capable of communicating with as many as 8 I/O modules for up to 128 I/O points.

The ControlNet Ex segment in the hazardous area must be protected from other ControlNet segments in safe areas. Isolation can be achieved via two approaches: by converting coax to fiber with a pair of fiber hubs/repeaters or by using a coax barrier.

The combination of a ControlNet fiber hub (1786-RPA and -RPFM) and a ControlNet Ex fiber hub (1797-RPA and 1797-RPFM) allows for flawless, high-speed, deterministic data flow and messaging between hazardous and safe areas. This combination functions as an intrinsically safe isolator between hazardous and safe areas and can provide long-distance communication up to three kilometers. It is best for longer distance and largest number of adapters and I/O points.

An intrinsically safe network and I/O system installed in the hazardous area allows your data to be gathered at its origin and transported out of the area with minimum amount of wiring. Cable penetrations into the hazardous area, cable trays, and conduit are all drastically reduced.:

Network Comparison by Application Requirement

Catalog Number.	Description	Agency Certification	Intrinsically Safe Output Characteristics	Intrinsically Safe Power Supply (V, -V)	See page:
1797-ACRN15	Redundant media ControlNet Ex adapter	Class I Division 1 Groups A…D T4 Class I Zone 1 AEx ib IIC T4	16 position male/female FlexBus connector: $U_0 \leq 5.4V$ DC $I_0 \leq 400$ mA $P_0 \leq 2.16$ W $L_0 \leq 10$ µH $C_0 \leq 65$ µF	$U_i \leq 9.5V$ DC $I_i \leq 1$ A $P_i \leq 9.5$ W L_i = Negligible $C_i \leq 120$ nF	91

Network Comparison by Application Requirement

Catalog Number.	Description	Agency Certification	Intrinsically Safe Output Characteristics	Intrinsically Safe Power Supply (V, -V)	See page:
1797-RPA	ControlNet Ex modular repeater adapter	Class I Division 1 Groups A…D T4 Class I Zone 1 AEx ib IIC T4 Class II Division 1 Groups E, F, G; Class III(1)	30 pin male TTL bus connector $U_0 \leq 5.4V$ DC $I_0 \leq 201mA$ $P_0 \leq 1.09$ W $L_0 \leq 0.45$ µH $C_0 \leq 71$µF	$U_i \leq 9.5V$ DC $I_i \leq 1A$ $P_i \leq 9.5$ W L_i = Negligible $C_i \leq 120$ nF	91
1797-RPFM	ControlNet Ex fiber repeater module, medium distance	Class I Division 1 Groups A-D T4 Class I Zone 1 AEx ib [ia] IIC T4 Class II Division 1 Groups E, F, G; Class III(1)	30 pin male TTL bus connector $U_0 \leq 5.4$ $I_0 \leq 201$ mA $P_0 \leq 1.1$ W $L_0 \leq 0.45$ mH $C_0 \leq 71$ µF	—	92
1797-BCNR	Redundant ControLnet galvanic isolation barrier module	II (2) G [EEx ib] IIC	Open circuit voltage $U_0 = 7V$, max $I_0 = 14$ mA (at the resonant frequency of 66kHz)	—	92
1797-BIC	Bus isolator module	Nonincendive, use for Class I, Division 2 Groups A…D or Class I, Zone 2 Group IIC Provides intrinsically safe outputs to Class I, Division 1 Groups A…D or Class I, Zone 1 Group IIC	$V_t \leq 5.75V$ DC $I_t \leq 3.98.25$ mA $C_a \leq 39.67$ µF $L_a \leq 210$ µH	—	94
1797-CEC	FlexBus connector module	Nonincendive, use for Class I, Division 2 Groups A…D or Class I, Zone 2 Group IIC	—	—	94

(1) For Class II Division 1 Groups E, F, G and Class III, modules must be installed in a UL listed Type 4, 4X, 6, 6P, 9, 12, or 12K enclosure.

Figure 1 - Distribution Between Areas

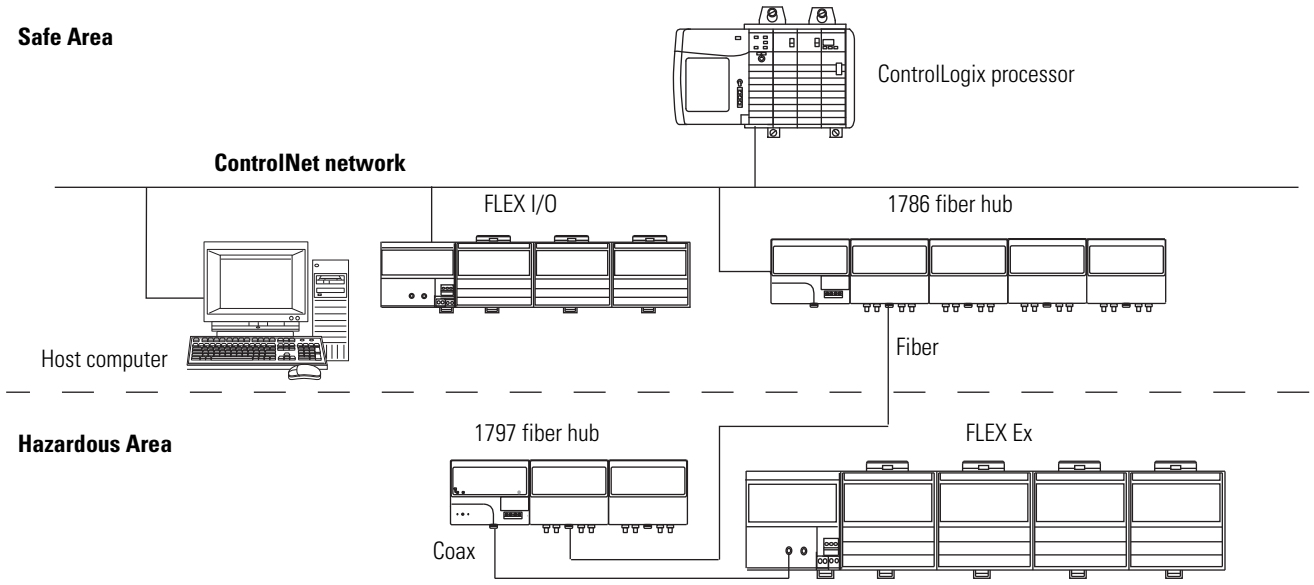

1797-ACNR15 Dual Media ControlNet Ex 1.5 Adapter

The 1797-ACNR15 interfaces FLEX Ex I/O modules to a coax segment of a ControlNet Ex I/O link. It provides power to the backplane to run bus interface circuitry aboard I/O modules and is capable of dual ControlNet Ex cable media.

FLEX I/O EtherNet/IP Adapter Specifications

Attribute	1797-ACNR15
I/O module capacity	8
Temperature, operating	-20…+70°C (-4 …+158°F)
Communication interface	Quad-shield RG-6 coax
Communication rate	5 Mbps
Noxious gas exposure	Tested to severity level G3, ISA-S71.04-1985
Dimensions (HxWxD), approx	94 x 94 x 91 mm (3.7 x 3.7 x 3.58 in.)
Weight, approx.	0.2 kg (0.44 lbs)
Thermal dissipation	29 BTU/hr

1797-RPA ControlNet Ex Coax Drop Repeater Module

The 1797-RPA functions as part of the fiber repeater hub within the hazardous area to extend the length of the ControlNet Ex segments to interlink systems all operating within the area. It functions as the intelligent starter block for a multiport repeater and is configured with at least one media adapter.

FLEX I/O ControlNet Adapter Specifications

Attribute	1797-RPA
Fiber media port adapter capacity	2
Temperature, operating	-20…+70°C (-4 …+158°F)
ControlNet cable	Quad-shield RG-6 coax
Communication rate	5 Mbps
Noxious gas exposure	Tested to severity level G3, ISA-S71.04-1985
Power dissipation	8.5 W
Dimensions (HxWxD), approx	46 x 94 x 75 mm (1.8 x 3.7 x 2.95 in.) 94 x 94 x 91 mm (3.7 x 3.7 x 3.6 in.) installed
Weight, approx.	0.2 kg (0.44 lbs)
Thermal dissipation	29 BTU/hr

1797-RPFM ControlNet Ex 3 km Fiber Media Port Adapter

The 1797-RPFM (part of the fiber repeater hub) functions as a non-intelligent fiber to backplane conversion device and converts glass fiber infrared LED media signals to backplane signals for use by the 1797-RPA repeater module.

FLEX I/O DeviceNet Adapter Specifications

Attribute	1797-RPFM
Communication interface	Fiber optic cable
Fiber type	62.5/125 mm
Fiber termination type	ST (plastic or ceramic)
Communication rate	5 Mbps
Noxious gas exposure	Tested to severity level G3, ISA-S71.04-1985
Power dissipation	Included in 1797-RPA
Dimensions (HxWxD), approx	94 x 94 x 91 mm (3.7 x 3.7 x 3.58 in.)
Weight, approx.	0.1 kg (0.22 lbs)
Thermal dissipation	Included in 1797-RPA

1797-BCNR Coax Barrier Module

The redundant media ControlNet coax barrier (1797-BCNR) isolates the ControlNet segment in the safe area from that in the hazardous area. It allows connection into the hazardous area without converting to/from fiber media. The barrier can support up to 20 adapters and distances up to 500 meters. Thus, it addresses intermediate size applications in a highly cost-effective manner. The barrier can be mounted in safe, Division 2 or Zone 2 areas.

When using a 1797-BCNR, the total allowable length of a segment containing standard RG-6 quad-shield cable depends on the number of taps in your segment. There is no minimum trunk-cable section length requirement. The maximum allowable length of a segment that contains a 1797-BCNR is 500 m (1640 ft) with two taps connected. Each additional tap decreases the maximum length of the segment according to the chart. The maximum number of taps allowed on a segment is 20 with a maximum length of 250 m (820 ft).

FLEX I/O Remote I/O Adapter Specifications

Attribute	1797-BCNR
Temperature, operating	-20…+70°C (-4 …+158°F)
ControlNet Ex system characteristics	U_0 = 7V I_0 = 55 mA @ 52 KHz P_0 = negligible
Non Ex ControlNet characteristics	U_n = 5V U_m = 253V AC I = not defined P = not defined
ControlNet communication rate	5 Mbps
Transmission attenuation	-7.84 dB
Noxious Gas exposure	—
Dimensions (HxWxD), approx.	70 x 100 x 90 mm (2.76 x 3.94 x 3.55 in.)
Weight, approx.	0.2 kg (0.44 lbs)

1797-BIC Bus Isolator Module and 1797-CEC FlexBus Connector

The bus isolator modules, 1797-BIC and -CEC, allow you to configure FLEX Ex modules and FLEX I/O modules on the DIN Rail when attached to the same adapter and grouped together on appropriate sides of the bus isolator module. This highly flexible, cost-effective solution combines intrinsically safe and non-intrinsically safe systems.

Intermixed system can be configured for use in the:

- safe area much like traditional IS and I/O systems
- hazardous and safe control equipment where the distance of physical separation is short
- FLEX Ex I/O with communication adapters that are not intrinsically safe

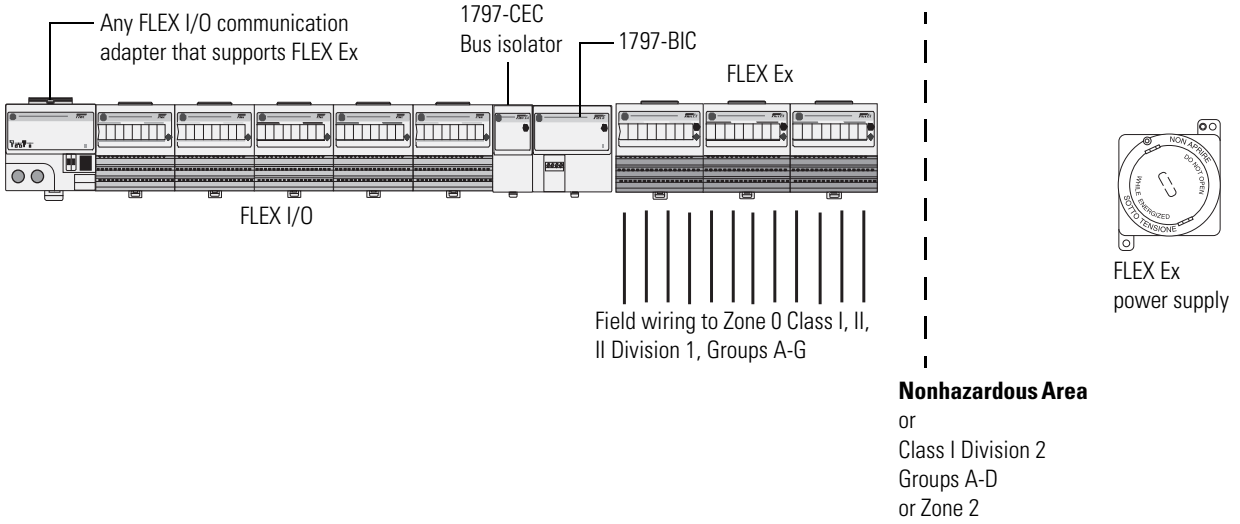

The 1797-BIC and -CEC modules provide an IS-compatible mechanism to separate two sections of the backplane, allowing IS and non-IS field-device wiring to the same I/O group. It converts hazardous power to IS-safe power to run one side of the bus receiver/transmitter circuitry and IS-safe power to slave side modules. A total of eight I/O modules (1794 FLEX I/O or 1797 FLEX Ex I/O) may be attached to the adapter.

When combining 1794 FLEX I/O and 1797 FLEX Ex I/O, the 1794 FLEX I/O modules are placed to the left of the 1797-BIC and -CEC modules while the 1797 FLEX Ex I/O modules are placed on the right.

IMPORTANT A FLEX Ex power supply (1797-PSxxx) must be used to power the 1797 FLEX Ex I/O regardless of where they are located.

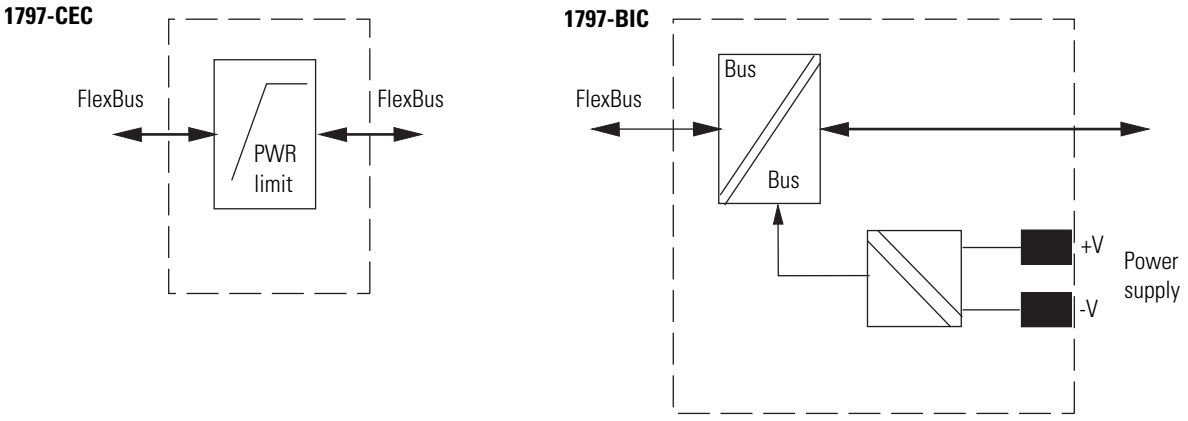

Attribute	1797-BIC
I/O module capacity	8(1)
Isolation voltage	System to System and System Slave Side to Power Supply: Galvanic to DIN EN 50020
Power consumption, max	0.15 A @ 18…32V DC
Power source failure, max input	U_m = 253V AC
Noxious gas exposure	Tested to severity level G3, ISA-S71.04-1985
Power dissipation	2.1 W
Thermal dissipation	7.2 BTU/hr
Dimensions HxWxD	87 x 94 x 75 mm 3.4 x 3.7 x 2.95 in.
Weight, approx.	0.2 kg (0.44 lbs)

(1) 8 FLEX Ex modules. Note that a total of eight I/O modules can be attached to a 1794 FLEX I/O adapter. The 1797-BIC and 1797-CEC are not included in this number. In intermixed systems, the number of 1797 FLEX Ex I/O modules (attached onto the 1797-BIC) plus the number of 1794 FLEX I/O modules (connected between the adapter and the 1797-CEC) cannot exceed eight.

Notes:

Select FLEX Ex I/O Modules

Step 2 – Select:

I/O modules based on field devices

FLEX Ex follows a producer/consumer model for remote I/O. Input modules produce data for the system. Controllers, output modules, and intelligent modules produce and consume data. The producer/consumer model multicasts data. This means that multiple nodes can consume the same data at the same time from a single device.

FLEX Ex I/O modules offer 2 through 16 I/O each. You can connect together a maximum of eight FLEX Ex I/O modules with a FLEX Ex I/O adapter, for a maximum of 128 I/O per assembly.

Mix and match digital and analog I/O to meet your application needs.

Digital I/O Modules

Digital I/O modules have digital I/O circuits that interface to on/off sensors (pushbuttons and limit switches) and actuators (motor starters, pilot lights, and annunciators).

These outputs are controlled by the PLC controller while the inputs control the state of corresponding bits in the PLC.

Features

- Modules detect, indicate, and report the following faults:
  - open input or output field devices or wiring
  - shorted output field devices
  - shorted input or output wiring
  - Selectable input filter times from less than 1 to 33 ms.
- LED for each channel indicating status of:
  - corresponding input device
  - output signal

Digital I/O Module Summary

Catalog Number	Inputs	Outputs	Terminal Base Unit	Electrical Range	Module Type
Input Modules					
1797-IBN16	16	—	1797-TB3, 1797-TB3S	—	Nonisolated NAMUR inputs
Output Modules					
1797-OB4D	—	4	1797-TB3, 1797-TB3S	—	Nonisolated source outputs

Modules Specifications

The following section shows more detailed module specifications in comparative groups to facilitate your selection based on your requirements.

1797-IBN16 16 Point Non-isolated NAMUR Input Module

- Fault detection, fault bits in data table and status indicator LED (per channel) blinking red (1 Hz)
- Lead breakage defeat on four-channel group basis via module DIP switch selection
- Fault detection can be disabled via data table
- Programmable digital input filtering 1...33 ms (OFF to ON and ON to OFF)
- All channels updated to FlexBus ≤ 500 µs
- Compatible with NAMUR sensors and dry contacts

Schematic drawing of the 1797-IBN16 module

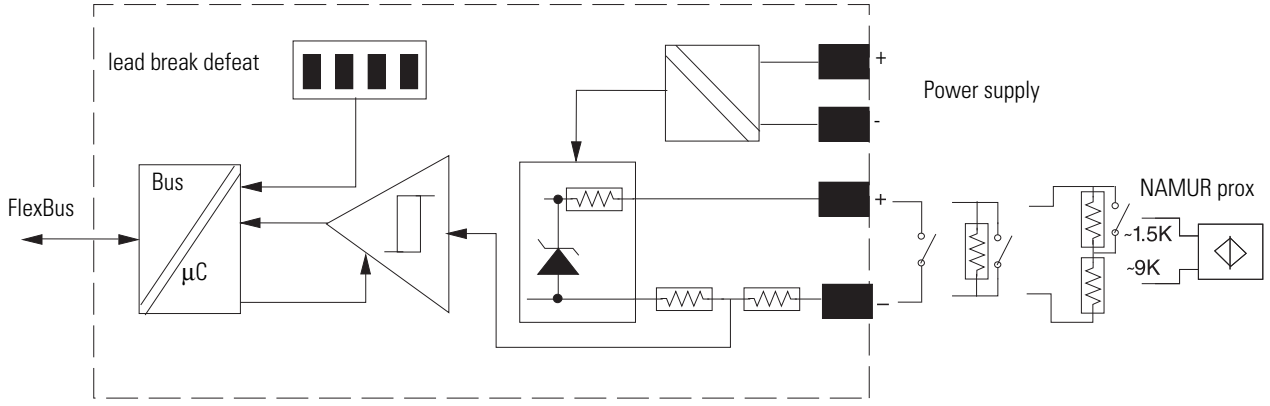

16 Point Non-isolated NAMUR Input Module

Specification	1797-IBN16
Number of inputs	16
Input type	EN 60947-5-6, NAMUR compatible
Current, on-state input, min	2.1 mA
Current, off-state input, max	1.2 mA
Hysteresis	0.2 mA
Input frequency, max	1000 Hz
Input pulse width	≥25µs for on or off
Load voltage, max	U/V = 7.5V DC
Short circuit current	7.5 mA
Short circuit threshold current	> 6 mA
Lead breakage threshold current	≤ 0.15 mA
Input delay time, OFF to ON	1 ms, 2 ms, 3 ms, 5 ms, 9 ms, 17 ms, 33 ms(1)
Input delay time, ON to OFF	1 ms, 2 ms, 3 ms, 5 ms, 9 ms, 17 ms, 33 ms(2)

16 Point Non-isolated NAMUR Input Module

Specification	1797-IBN16
Intrinsically safe input type	II (1)2G Ex ib[ia] IIC T4 Class I, Div. 1, Groups A-D and Class I, Zone 1, AEx ib/[ia] IIC
Noxious gas exposure	Tested to severity level G3, ISA-S71.04-1985
FLEX Ex power consumption	2.8 W @ 9V
Power dissipation	2.8 W
Thermal dissipation, max	9.6 BTU/hr
Dimensions (HxWxD), approx	46 x 94 x 75 mm (1.8 x 3.7 x 2.95 in.) 94 x 94 x 91 mm (3.7 x 3.7 x 3.6 in.) installed

(1) 1 ms default selectable.

(2) 1 ms default selectable.

1797-OB4D 24V DC 4 Point Non-isolated Source Output Module

- 4 output channels referenced to a single supply
- Yellow LED to indicate output state, output ON = LED ON
- Fault indication, signal to the backplane and status indicator LED (per channel) blinking red for fault
- Output short circuit detection
- Output wire-off detection
- Output wire-off detection on per channel basis via module data bit
- Electronically short-circuit protected, fault reported to controller
- All channels updated from the backplane every 2 ms
- Output fault state programmable

Schematic Drawing of the 1797-OB4D Module

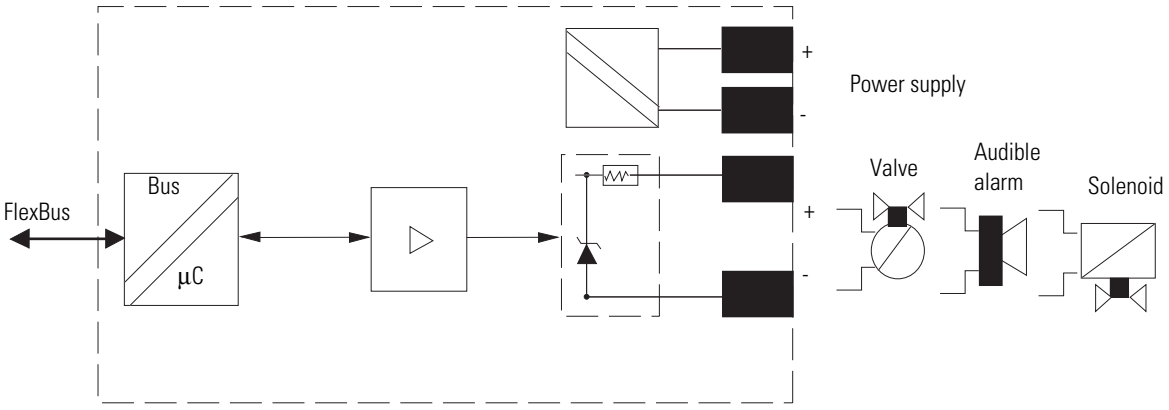

24V DC 4 Point Non-isolated Source Output Module

Specification	1797-OB4D
Number of outputs	4
Output load range	30…5000 Ω
Fault detection	Fault bits in data table and LED (per channel) blinking red (1 Hz)
Protection	Overload
Output delay time, OFF to ON	≤ 1.2 ms
Output delay time, ON to OFF	≤ 1.2 ms
Intrinsically safe output type	II (1)2G Ex ib[ia] IIC T4 Class I, Div. 1, Groups A-D and Class I, Zone 1, AEx ib/[ia] IIC
Noxious gas exposure	Tested to severity level G3, ISA-S71.04-1985
FLEX Ex power consumption	7.5 W @ 9V
Power dissipation	5 W
Thermal dissipation, max	17.07 BTU/hr
Dimensions (H x W x D)	46 x 94 x 75 mm (1.8 x 3.7 x 2.95 in.) 94 x 94 x 91 mm (3.7 x 3.7 x 3.6 in.) installed

1797-OB4D Output Voltage/Current Capability

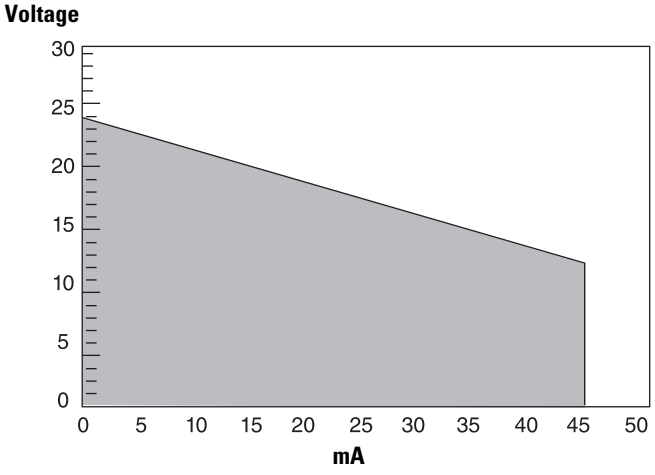

Analog Modules

Choose analog I/O modules when you need:

- **Configurable channels** allow the module to be used with a variety of sensors.
- **On-board scaling** eliminates the need to scale the data in the controller. Controller processing time and power are preserved for more important tasks, such as I/O control, communications, or other user-driven functions.
- **On-line configuration**. Modules can be configured in RUN mode using the programming software or the control program. This allows you to change configuration while the system is operating. For example, the input filter for a particular channel could be changed, or a channel could be disabled based on a batch condition.
- **Over- and under-range detections and indications** eliminates the need to test values in the control program, saving valuable processing power of the controller. In addition, since alarms are handled by the module, the response is faster and only a single bit needs to be monitored to determine if an error condition has occurred.
- **Ability to direct output device operation during an abnormal condition**. Each channel of the output module can be individually configured to hold its last value or assume a user-defined value on either a run-to-program or run-to-fault condition. This feature allows you to set the condition of your analog devices, and therefore your control process, which may help to ensure a reliable shutdown.
- **Selectable input filters** allows you to select from several different filter frequencies for each channel that best meets the performance needs of your application based on environmental limitations. Lower filter settings provide greater noise rejection and resolution. Higher filter settings provide faster performance.
- **Selectable response to broken input sensor**. This feature provides feedback to the controller that a field device is not connected or operating properly. This allows you to specify corrective action based on the bit or channel condition.

Analog I/O Module Summary

Catalog Number	Inputs	Outputs	Terminal Base Unit	Signal Range	Module Type
Input Modules					
1797-IE8	8	—	1797-TB3, 1797-TB3S	0…20 mA	16-bit single-ended, nonisolated inputs
1797-IE8H					16-bit single-ended, nonisolated inputs with HART capability
1797-IE8NF					16-bit single-ended, nonisolated inputs with noise filter
1797-IRT8				0…500 Ω -40…100 mV TC RTD	16-bit, nonisolated RTD thermocouple/mV inputs

Analog I/O Module Summary

Catalog Number	Inputs	Outputs	Terminal Base Unit	Signal Range	Module Type
Output Modules					
1797-OE8	—	8	1797-TB3, 1797-TB3S	0…20 mA 4…20 mA	16-bit single-ended, nonisolated outputs
1797-OE8H					16-bit single-ended, nonisolated outputs with HART capability

Module Specifications

The following section shows more detailed module specifications in comparative groups to facilitate your selection based on your requirements.

1797-IE8, 1797-IE8H (HART), and 1797-IE8NF (with Noise Filter) 8 Point 16-bit Single-ended Non-isolated Analog Input Modules

Eight single-ended input channels referenced to a single common

- 3-wire input for 2- and 3-wire transmitters
- Functional data: normal input
  input current = 4...20 mA, full-current range
  0...22 mA to allow for over and underrange indication
- Wire-off detection, signal to the backplane and LED (per channel) blinking red for fault
- Wire-off detection on per channel basis via module data bits
- Input filter cutoff programmable
- Resolution: 16 bits
- Accuracy: 0.1%
- The 1797-IE8 is typically used to act on change-of-state and high-speed applications. It is not compatible with HART handheld devices.
- The 1797-IE8NF has additional hardware filtering that damps out spurious signals and can be used for slower changing, steady-state processes. It has slower step response than the 1797-IE8 (100 ms versus 4 ms). It is compatible with HART handheld devices.
- The 1797-IE8H is similar to the 1797-IE8NF with real time data table updates. It also supports pass-through of HART commands as unscheduled ControlNet messages. It is compatible with FDT software packages.

Schematic Drawing of the 1797-IE8 Module

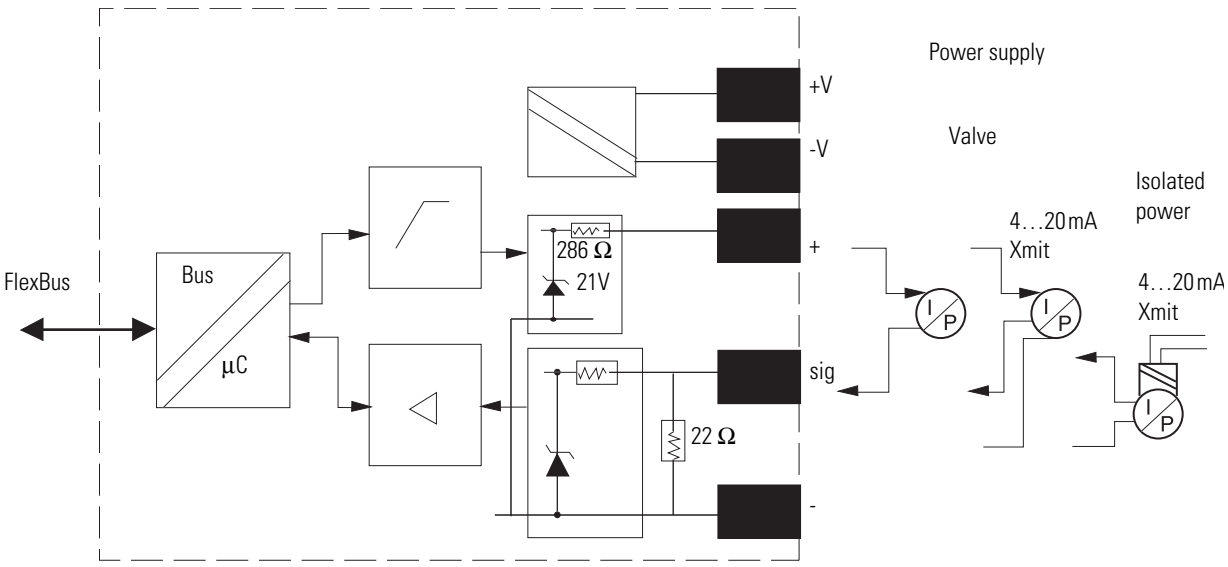

FLEX Ex Analog Input Comparison

Specification	1797-IE8	1797-IE8NF	1797-IE8H
Input resolution	16 bits		
Input signal range	0…22 mA		
Transfer characteristics, temperature drift	0.1% of output signal range at 20 °C (68 °F)		
Functional data range	> 15V @ 22 mA > 21.5V @ 0 mA		> 17V @ 22 mA > 23V @ 0 mA
Data format	Configurable		
Step response to 99% of Full Scale	4 ms	80 ms	100 ms
Update time, module to adapter	200…1600 µs		
Noxious gas exposure	Tested to severity level G3, ISA-S71.04-1985		
FLEX Ex power consumption	7.5 W @ 9V		7.1 W @ 9V
Power dissipation, max	5.2 W		
Thermal dissipation, max	17.75 BTU/hr		13.5 BTU/hr
Instrinsically safe input type	$U_0 \leq$ 23.7V $I_0 \leq$ 93.5 mA $P_0 \leq$ 555 mW		$U_0 \leq$ 24.4V $I_0 \leq$ 92.5 mA $P_0 \leq$ 565 mW
	II (1)2G Ex ib[ia] IIC T4 Class I, Div. 1, Groups A-D and Class I, Zone 1, AEx ib [ia] IIC		
Dimensions (HxWxD), approx.	46.0 x 94.0 x 75.0 mm (1.8 x 3.7 x 2.95 in.)		

1797-IRT8 8 Point 16-bit Non-isolated RTD Thermocouple/mV Input Module

- input channels referenced to a single common
  - RTD mode
  - RTD types Pt100, Pt200, Ni100, Ni200, Ni120, Cu10
  - 2-, 3-, and 4-wire connection
  - sensor lead breakage and short circuit detection all 4 leads
  - measuring resistance 0...500 Ω
  - accuracy: 0.1% of span at 20 °C, filter cutoff < 1 Hz
- mV mode
  - input voltage -40...100 mV differential sensing
  - sensor breakage detection
- thermocouple mode
  - types B, E, J, K, TXK/XK (L), N, R, S, T
  - cold junction compensation (CJC)
  - external reference junction (programmable)
  - sensor breakage detection
  - accuracy: 0.1% of span, filter cutoff < 1 Hz
  - accuracy of CJC: ± 1 C/K

Schematic Drawing of the 1797-IRT8 Module

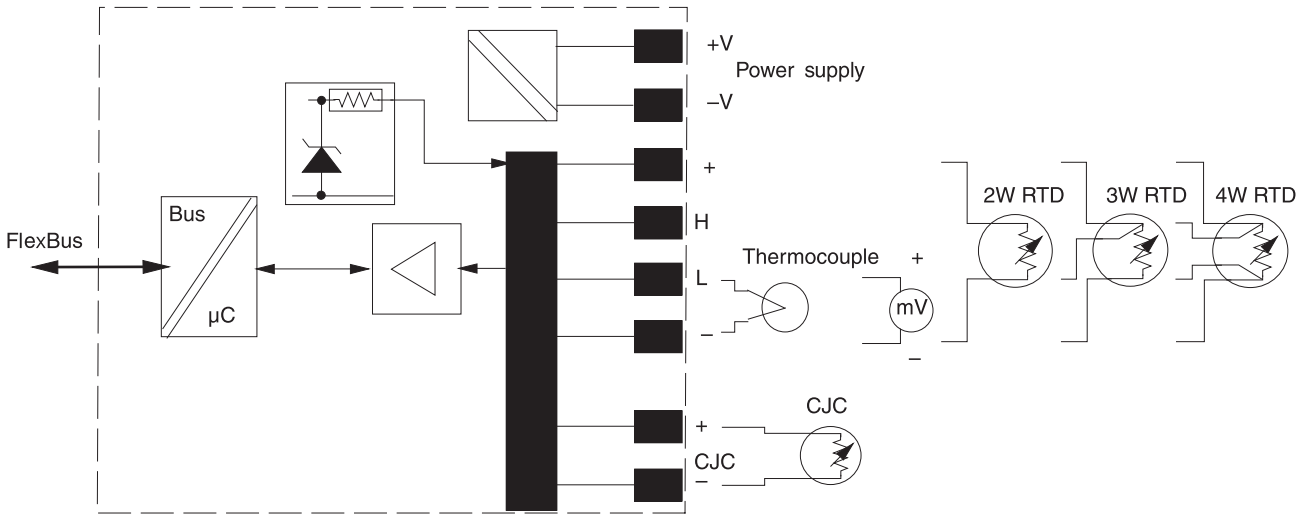

8 Point 16-bit Non-isolated RTD Thermocouple/mV Input Module

Specification	1797-IRT8
Input type	Suitable for Pt 100, Pt200, Ni 100, Ni120, Ni200, Cu10 RTD, Thermocouple Type B, E, J, K, N, R, S, T, TXK/XK(L) Configuration via internal bus

8 Point 16-bit Non-isolated RTD Thermocouple/mV Input Module

Specification	1797-IRT8
Input signal range	0…500 Ω -40…100 mV TC RTD
Settling time	8 ms to 99% of final value (mV mode, °F thermocouple)
Open RTD detection	Out of range upscale reading
Lead resistance compensation	< 15 Ω total
Transfer characteristics, accuracy	RTD: 0.1% of span @ 20 °C, filter cutoff < 1 Hz Thermocouple: 0.1% of span @ 20 °C, filter cutoff < 1 Hz Cold junction compensation: ± 1 °C
Temperature drift	150ppm/ °C (primary range)
Data organization	Overrange Alarm – Individually for each channel Lead Breakage Alarm – Individually for each channel Fault State – Individually for each channel (includes overrange, lead breakage and short circuit) Sensor Mode RTD 2, 3, or 4-wire – Common to groups of 4 channels (ch 0…3, ch 4…7) TC Sensor Type (for example TC, Type B, E, J..., RTD or mV) - Common to groups of 4 channels (ch 0…3, ch 4…7) Internal Reference Junction (TC mode) – Common to all channels (0 °C, 20 °C, 25 °C, 30 °C, 40 °C, 50 °C, 60 °C, 70 °C
Noxious gas exposure	Tested to severity level G3, ISA-S71.04-1985
FLEX Ex power consumption	1.6 W @ 9V
Power dissipation, max	1.6 W
Thermal dissipation, max	5.46 BTU/hr
Dimensions (H x W x D)	46 x 94 x 75 mm (1.8 x 3.7 x 2.95 in.) 94 x 94 x 91 mm (3.7 x 3.7 x 3.6 in.) installed

HART Interface Modules

FLEX Ex HART analog modules (1797-IE8H and 1797-OE8H) are ideal for use in applications that need connection with FDT (Field Device Tool) compatible asset management software, such as Rockwell Software FieldCare HART Communication bundle or Endress + Hauser Fieldcare. For HART Device Type Management (DTM) programs and drivers, go to http://www.ab.com/io, and select Configurations Files, DTM files for HART.

- FLEX HART analog modules can be used on ControlNet or EtherNet/IP. The FLEX Ex Ethernet adapter requires firmware v3.1 or later, which is flash upgradeable, to support these modules.
- Each HART field device is wired to its own input or output channel:
  - 8 single-ended channels
  - does not support multi-drop
  - 2- or 3-wire devices
- HART commands can be transmitted by unscheduled message:
  - sample RLL subroutines are available.
  - currently limited to one instance of RLL subroutine per module, one channel at a time.

FLEX Ex I/O Analog Output Modules

1797-OE8 and 1797-OE8H (HART) 8 Point 13-bit Single-ended Non-isolated Analog 8 Output Module

- Eight dual-ended output channels referenced over sense resistors to a single common
- Functional data:
  - normal output
  - current = 4...20 mA, full current
  - range = 0...22 mA to allow for over- and under-range indication
- Output wire-off detection, LED (per channel) blinking red for fault, threshold < 2 mA
- Output wire-off detection on per channel basis via module data bits
- Short circuit detection
- All channels updated to the backplane every 4 ms
- Resolution: 13 bits
- Accuracy: 0.1%
- One power supply loop for one module
- Output fault state programmable
- The 1797-OE8 and 1797-OE8H can be used in digital mode for low energy digital field devices.
- The 1797-OE8H is similar to the 1797-OE8 with real time data table updates. It also supports pass-through of HART commands as unscheduled ControlNet messages. It is compatible with FDT software packages.

Schematic Drawing of the 1797-OE8 and 1797-OE8H Modules

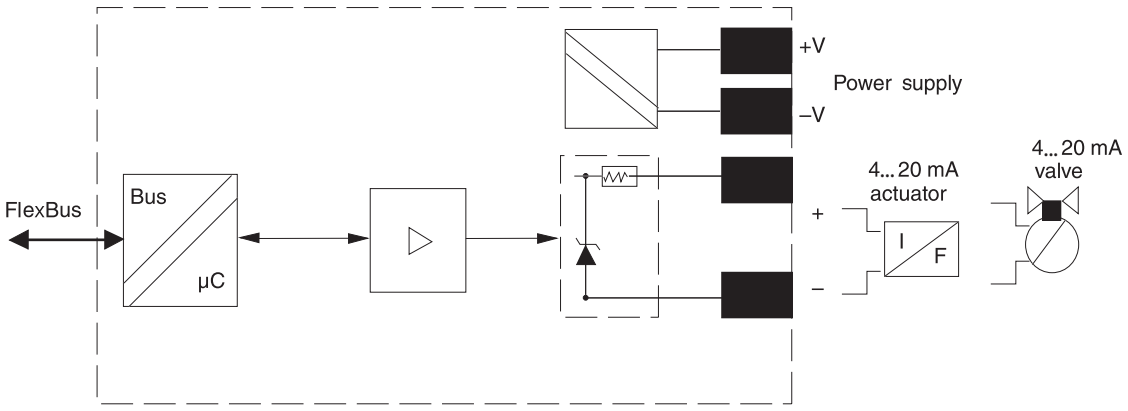

8 Point 13-bit Single-ended Non-isolated Analog 8 Output Modules

Specification	1797-OE8	1797-OE8H
Output resolution	13 bits	
Output load range	0…500 Ω @ 22 mA > 11V @ 22 mA	0…680 Ω @ 22 mA > 15V @ 22 mA
Step response to 99% of Full Scale	4 ms	18 ms; 115 ms with HART active

8 Point 13-bit Single-ended Non-isolated Analog 8 Output Modules

Specification	1797-OE8	1797-OE8H
Transfer characteristics, accuracy	0.1% of output signal at 20 °C (68 °F)	
Transfer characteristics, temperature drift	0.010%/C of output signal range	
Noxious gas exposure	Tested to severity level G3, ISA-S71.04-1985	
FLEX Ex power consumption	6.3 W @ 9V	6.1 W @ 9V
Power dissipation, max	5.4 W	6.1 W
Thermal dissipation, max	18.4 BTU/hr	20.8 BTU/hr
Intrinsically safe output type	II (1)2G Ex ib[ia] IIC T4 Class I, Div. 1, Groups A-D and Class I, Zone 1, AEx ib [ia] IIC	
Instrinsically safe input characteristics	Ch 0…7 Terminals: 0…1; 4…5; 8…9; 12…13; 17…18; 21…22; 25…26; 29…30 $U_0 \leq$ 21V $I_0 \leq$ 100 mA $P_0 \leq$ 520 mW	Ch 0…7 Terminals: 0…1; 4…5; 8…9; 12…13; 17…18; 21…22; 25…26; 29…30 $U_0 \leq$ 21.6V $I_0 \leq$ 92 mA $P_0 \leq$ 500 mW
Dimensions (H x W x D), approx	46 x 94 x 75 mm (1.8 x 3.7 x 2.95 in.) 94 x 94 x 91 mm (3.7 x 3.7 x 3.6 in.) installed	

1797-OE8 Output Voltage/Current Capability

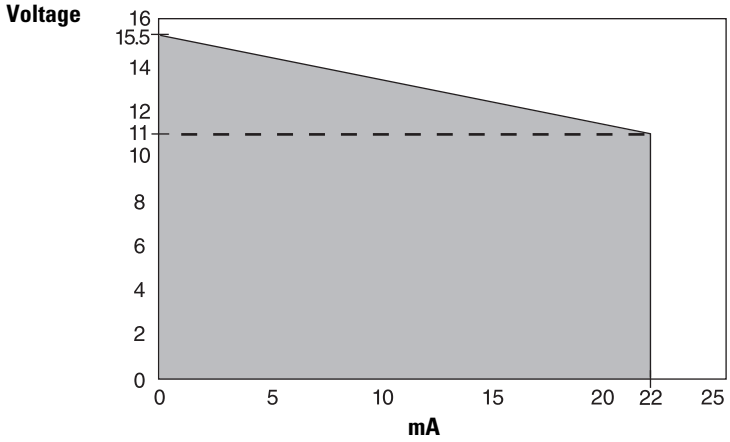

1797-OE8H Output Voltage/Current Capability

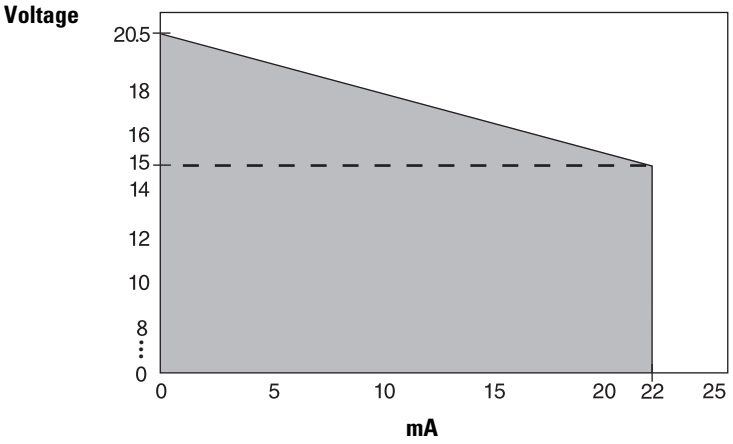

Counter I/O Module

Ideal for applications requiring rotational control, the FLEX Ex counter is essentially a tachometer with the capability of reporting frequency, acceleration, and direction. Outputs are activated by alarms. Input devices range from magnetic pickup to flowmeters, to incremental encoders to proximity detectors.

This intelligent I/O module is designed to perform high-speed frequency algorithms. The module provides two frequency inputs, two gate inputs, and two outputs. The frequency inputs are capable of accepting frequencies up to 32 kHz. The module accepts and returns binary data.

The counter measures frequency over a user-specified time interval. A frequency calculation can start before the time interval clock is synchronized with the frequency input to count over a user-selected sampling time or a user-defined number of frequency input pulses. All power for input devices (24V DC) is supplied by the module.

1797-IJ2 2 Input Frequency Counter Module

- Software configurable frequency operating mode, with independent selections per frequency input
- Frequency inputs, two gate inputs, and two outputs
- Functional data: four selectable ranges: 50 mV; 500 mV (magnetic pickup); flowmeter; and NAMUR
- Provides IS power to drive up to two NAMUR and two flowmeter frequency inputs and/or contact switches and NAMUR gate inputs
- NAMUR lead breakage indication for any lead, signal to the backplane and LED (per channel) blinking red for fault
- NAMUR lead breakage defeat on per channel basis via module data table (NAMUR inputs only)
- Frequency count range up to 32 kHz

- Calculate frequency on time interval or input count
- Programmable scaling
- Acceleration value calculated
- Maximum frequency or acceleration alarms
- All channels updated to the backplane every ≤ 4 ms (according to sampling time)

Schematic Diagram for the 1797-IJ2 Module

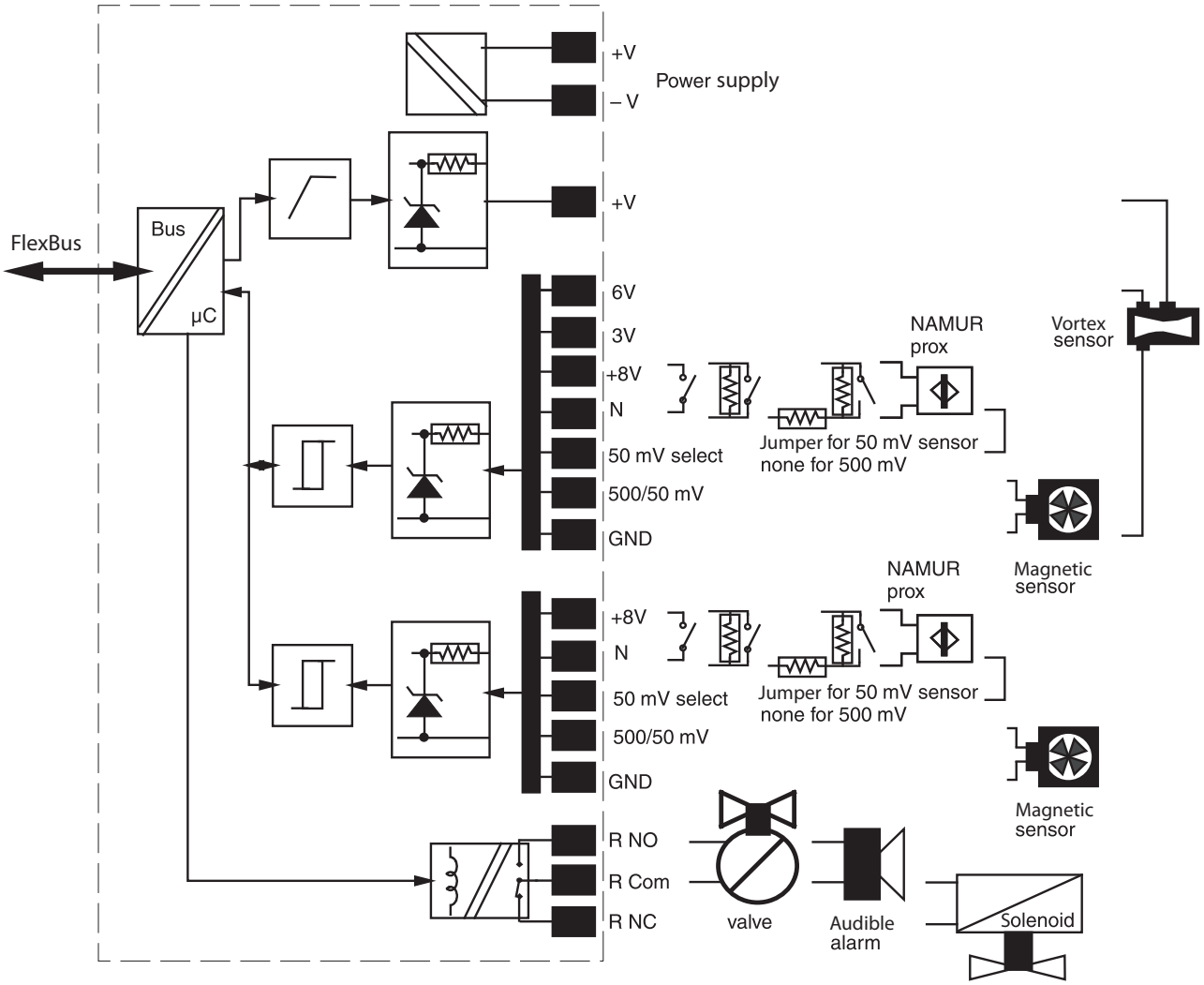

2 Input Frequency Counter Module

Specification	1797-IJ2
Number of inputs	2
Flowmeter input signal threshold	3V or 6V, selectable
Flowmeter input voltage available	< 15V @ 20 mA
Magnetic pickup input signal	50 mV or 500 mV, selectable
Processing time	≤ 4 ms

2 Input Frequency Counter Module

Specification	1797-IJ2
Input frequency range	1.0…32,767 Hz
Frequency resolution, min	Sampling Time – Accuracy 2 ms – 0.043% 4 ms – 0.033% 5 ms – 0.031% 10 ms – 0.027% 20 ms – 0.025% 50 ms – 0.023% 100 ms – 0.023% 200 ms – 0.023% 500 ms – 0.023% 1000 ms – 0.023%
Frequency input, characteristics	Magnetic pickup: 50 mV, 500 mV NAMUR: 8V, 8 mA Flowmeter: low ≥ 3V; high ≥ 6V
Impedance, frequency input	> 5 kΩ magnetic pickup > 10 kΩ flowmeter
Number of outputs	2
FLEX Ex power consumption	4.25 W
Power dissipation, max	4.25 W
Thermal dissipation, max	14.5 BTU/hr
Instrinsically safe input characteristics	EN 60947-5-6 (NAMUR)
Noxious gas exposure	Tested to severity level G3, ISA-S71.04-1985
Dimensions (H x W x D)	46 x 94 x 75 mm (1.8 x 3.7 x 2.95 in.) 94 x 94 x 91 mm (3.7 x 3.7 x 3.6 in.) installed

Select a FLEX Ex I/O Terminal Base Unit

Step 3 – Select:

the appropriate terminal base unit for your module and system

Each FLEX Ex I/O module requires a FLEX Ex I/O terminal base unit that snaps onto the DIN rail to the right of the I/O adapter. The terminal bases provide terminal connection points for the I/O wiring and plug together to form the backplane. They are available with screw, clamp, or spring terminations.

The following table is a comparison of general specifications for each FLEX Ex I/O terminal base unit. For compatibility with FLEX Ex I/O modules, see Table Digital I/O Module Summary on page 97 and Table Analog I/O Module Summary on page 101.

Terminal Base Wiring Diagrams

1797-TB3 and 1797-TB3S

Wiring when total module current draw is less than 8.5 W

Daisy-chaining Using Adapter Power Supply

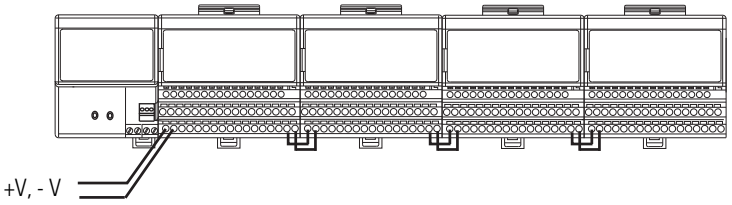

Use this method when the total module power draw is less that 8.5 W. Otherwise, power is connected to individual modules.

Wiring when total module current draw is greater than 8.5 W

Combination Daisy-chaining and Separate Power Supplies.

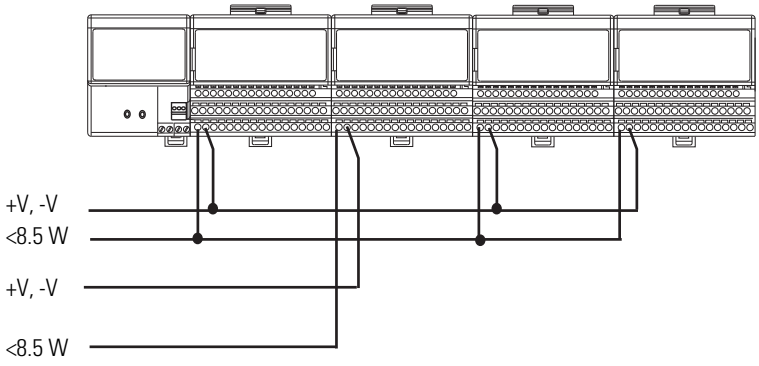

Separate power supply can be brought in on the last module in the chain if necessary. Make sure you do not jumper to the adapter if using this method.

Use this method when the total current draw through terminal base units is greater than 8.5 W.

Select a FLEX Ex I/O Power Supply

Step 4 – Select:

if power consumption exceeds the maximum for a single power supply, install additional power supplies

The power supply is an essential component in the operation of an intrinsically safe system. It must isolate the unsafe incoming power from the control system and limit the available energy to IS-safe levels.

FLEX Ex I/O power supplies provide power for the FLEX Ex ControlNet network, communication adapter, I/O modules, fiber hub, and IS field devices. No other power sources are needed to operate any components attached to the FLEX Ex system in the hazardous area. Power for valves, actuators, or transmitters come from the FLEX Ex modules.

FLEX Ex I/O power supply modules must be used to supply power to FLEX Ex I/O modules. Other power supplies are not allowed in order to meet the certification of the system. Power for valves, actuators, and transmitters come from the FLEX Ex modules.

There are two types of enclosures: (N-Type) explosion-proof with 1 inch conduit pipe thread input/output terminations that are certified in North America and (E-Type) flame-proof with increased safety input/output terminations that are certified to European standards. Each type is available in 24V DC or 85...253V AC for supply sources.

The 24V DC power supply includes dual power feeds for sour input redundancy whereas the AC power supplies support daisy chaining.

Common features include:

- four channels, 8.5 W output each channel
- outputs are IS galvanically isolated from the source
- all channels are independently IS limited

General Specification Comparison

Catalog	Description	Input Voltage, max	Output Power (W)	Dimensions (HxWxD), approx	Weight approx
1797-PS1N	FLEX Ex 85…250V AC Power Supply	250V AC	34 W[1]	174 x 174 x 140 mm (6.9 x 6.9 x 5.51 in.)	6 kg (13.2 lbs)
1797-PS1E	FLEX Ex 24V DC Power Supply	253V AC		260 x 174 x 140 mm (10.2 x 6.9 x 5.51 in.)	6.9 kg (15.2 lbs)
1797-PS2N2	FLEX Ex conduit pipe North American-certified Power Supply	32V DC max		174 x 174 x 140 mm (6.9 x 6.9 x 5.51 in.)	6.1 kg (13.4 lbs)
1797-PS2E2	FLEX Ex flame-proof European-certified Power Supply			260 x 174 x 140 mm (10.2 x 6.9 x 5.51in.)	7 kg (15.4 lbs)

(1) 8.5 W at each of 4 outputs.

E Type Power Supply

1797-PS1E
or
1794-PS2E2

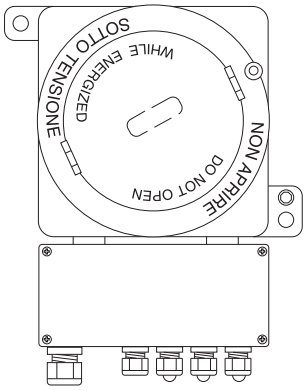

N Type Power Supply

1797-PS1N
or
1797-PS2N2

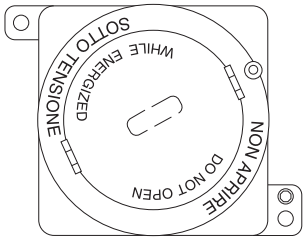

Understanding System Planning

Part of system planning is determining what modules are needed for the application, how many power supplies are needed, how to best partition the system, and where to locate the system cabinets.

A key task in the development cycle is determining the number of power supply outputs (thus power supplies) you will need.

Each power supply has four independent IS power outputs capable of 8.5W each. In this example, we required eleven IS power outputs so three power supplies were sufficient.

Power Requirements

Modules	Requires
Fiber hub	8.5 W
Two ControlNet adapters	8.5 W each
Two analog inputs	7.5 W each
Two analog outputs	6.3 W each
Two thermocouple inputs	1.6 W each
Two digital outputs	7.5 W each
Three NAMUR digital inputs	2.8 W each
Two counter inputs	4.25 W each

The total number of power supplies needed depends on the modules used and the total system configuration. The following illustration shows how this example may be configured.

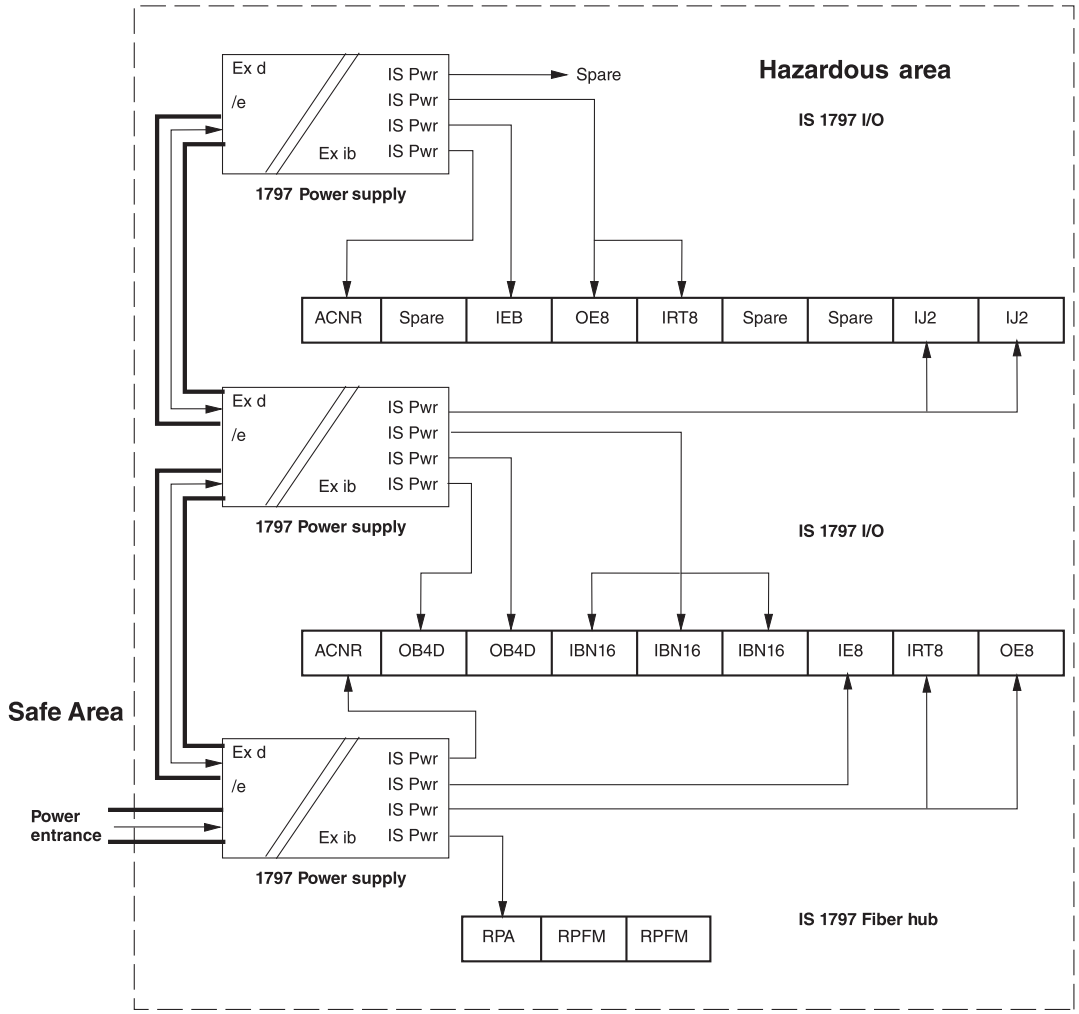

Assigning Power Supplies

Note the amount of power each module requires and assign it to a power supply output. Continue to assign modules to the power supply output until the supply's output power rating is consumed.

Each power supply output in the FLEX Ex system is rated for 8.5 W. Modules can be attached to the output until their combined power equals that number. Do not exceed the power supply maximum of 8.5 W.

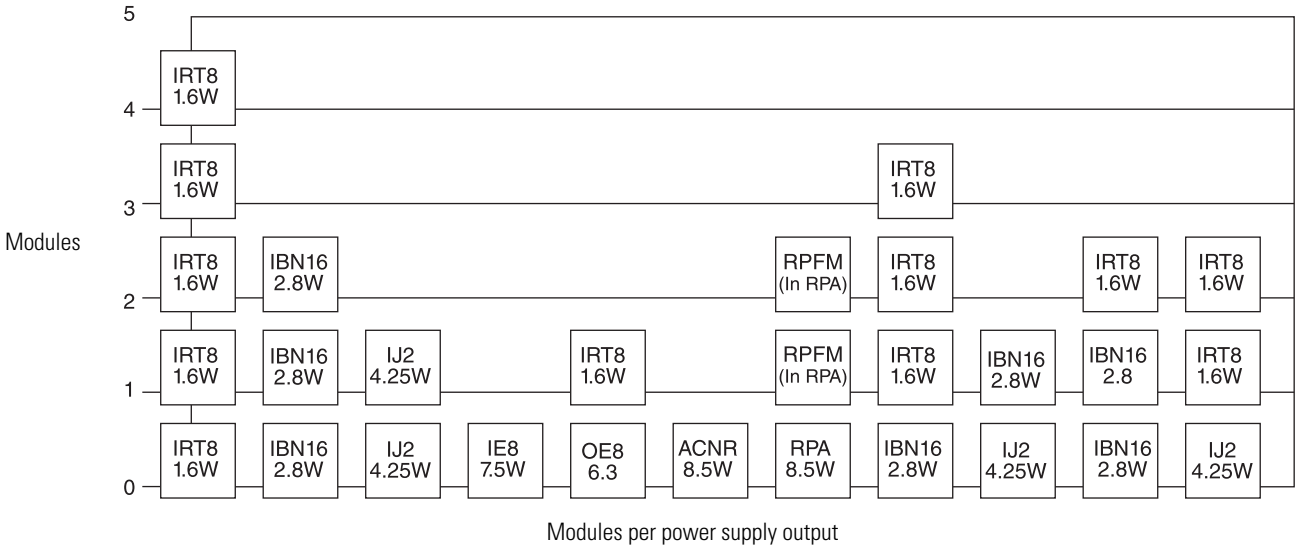

Hazardous Area Installation

The following illustration provides an example of how power supplies are arranged within the FLEX Ex system when using fiber hubs.

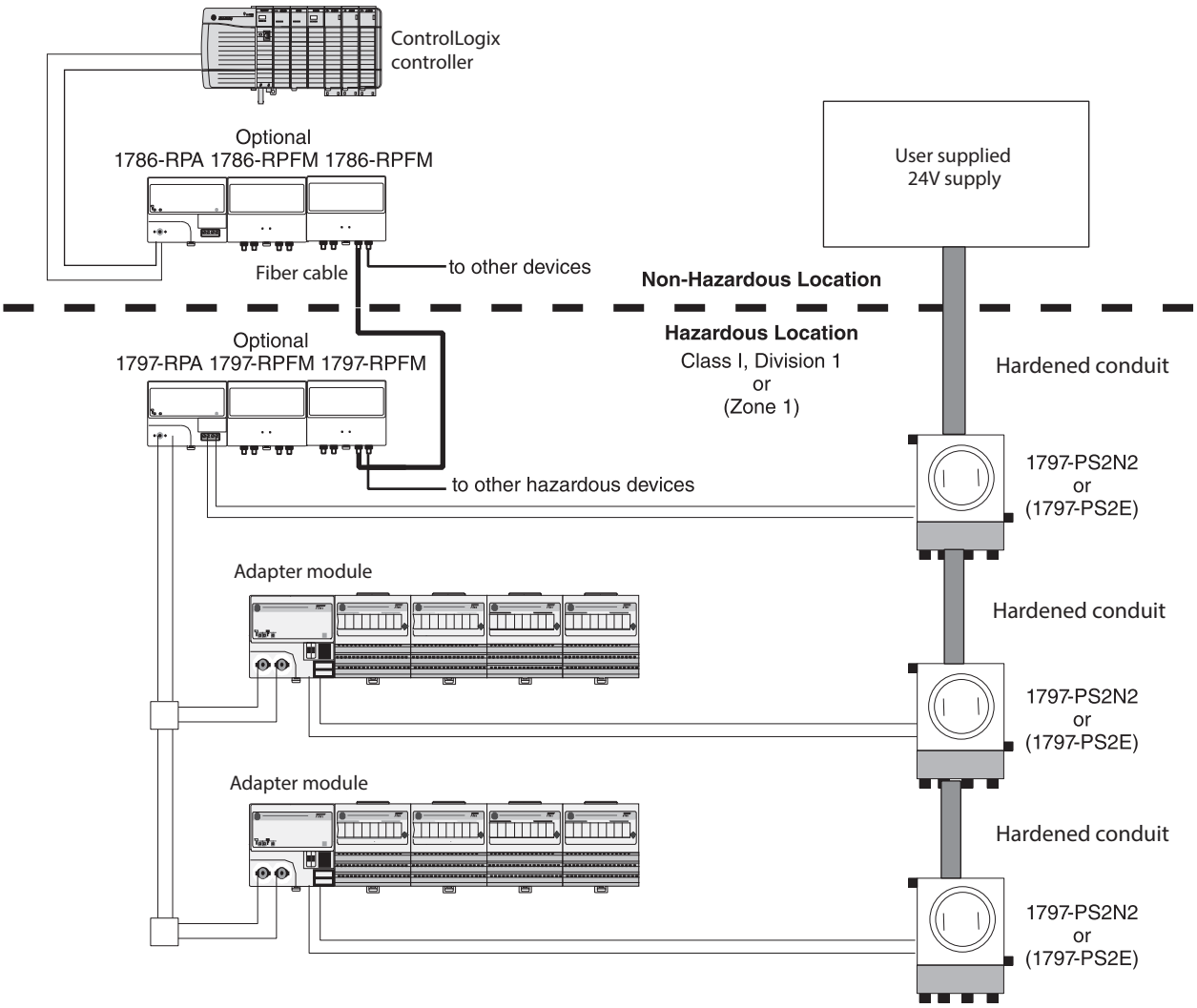

1797-PS1N and 1797-PS1E 85V…253V AC In/Quad-Ex DC Out

Type of Power Input

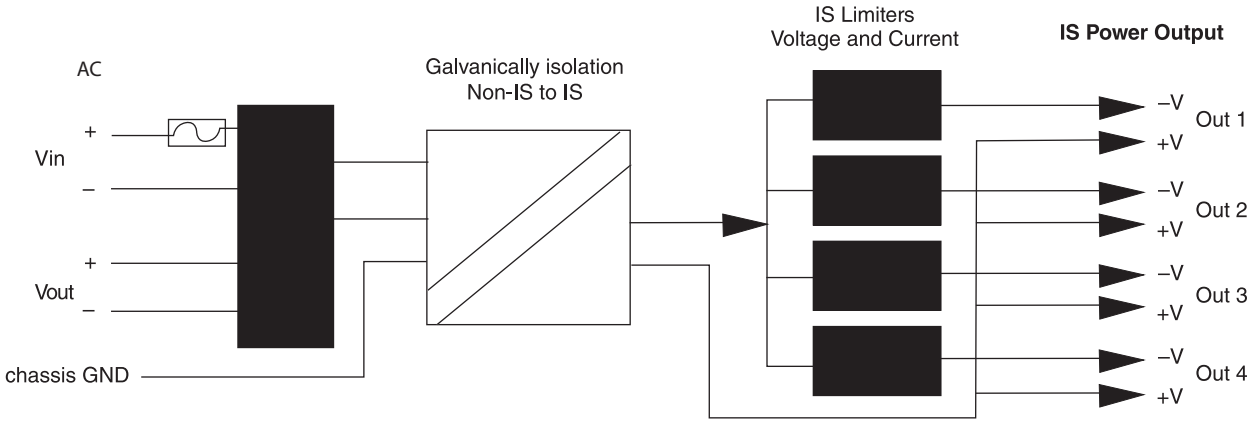

1797-PS2N2 and 1797-PS2E2 24V DC In/Quad-Ex DC Out

Type of Power Input

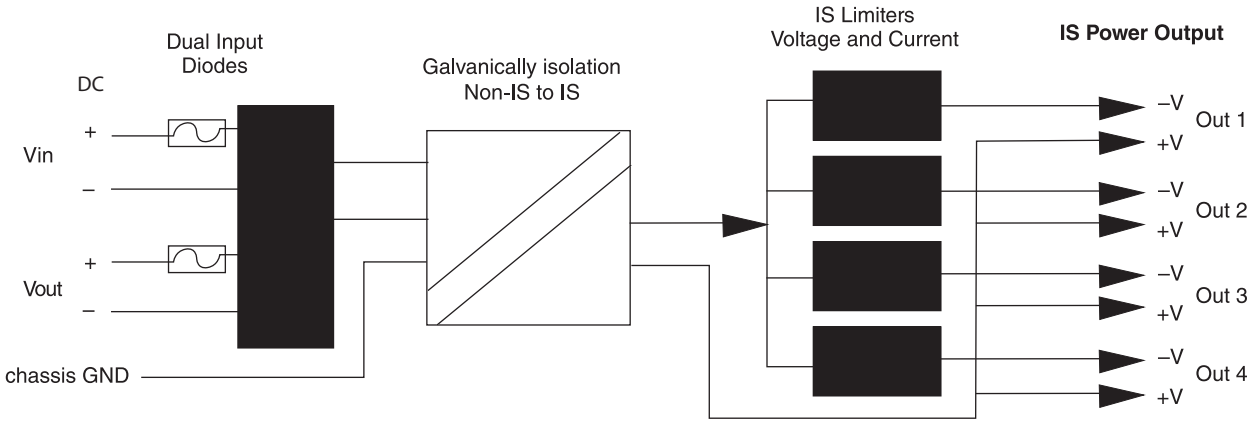

General Specifications Summary

Specification	1797-PS1N	1797-PS1E	1797-PS2N2	1797-PS2E2
Intrinsically safe module	Class I, Division 1, Groups A…D T4 (UL and C-UL) Class II, Division 1 Groups E…G (UL and C-UL) Class III (UL, FM and C-UL)	Zone1: II 2G Ex de [ib] IIC T4 Zone 22: II 3D Ex tD A22 IP54 T90°C X	Class I Division 1 Groups A…D T4 (UL, C-UL and FM) Class II Division 1 Groups E…G (UL, FM, CUL) Class III	Zone1: II 2G Ex de [ib] IIC T4 Zone 22: II 3D Ex tD A22 IP54 T90°C X
Input connector terminals	Terminals 1, 2, 4, 5	Terminals 1, 2, 4, 5	Terminals 1, 2, 4, 5	Terminals 1, 2, 4, 5
Operating voltage range	85…250V AC 120…250V DC	85…253V AC	18…32V DC	18…32V DC
Current consumption	0.9 A	0.9 A	3.1 A	3.1 A
Ripple	—		5% AC	

General Specifications Summary

Specification	1797-PS1N	1797-PS1E	1797-PS2N2	1797-PS2E2
Input power entry	1 in NPT, ≤ 6 in conduit allowed between power supply and seal (UL, FM and C-UL)	Increased safety	1 in NPT, 6 in conduit allowed between power supply and seal (UL and C-UL) 1 in NPT, 0 in conduit allowed between power supply and seal (FM)	Increased safety
Output connector terminals	Terminals 10…17			
Power supply output power (W)	34 W(1)			
Safe voltage, max U_m	250V AC	253V AC	40V DC	
Voltage U_0	≤ 9.5V			
Current I_0	≤ 1 A			
C_0 (IIC)	≤ 500 nF			
L_0 (IIC)	≤ 8µH			
Output cable resistance, max	≤ 0.1 Ω (both directions)			
Power supply input power	55 W			
Power dissipation	21 W			
Thermal dissipation, max	71.67 BTU/hr			
Dimensions (HxWxD), approx(2)	174 x 174 x 140 mm 6.9 x 6.9 x 5.51 in	260 x 174 x 140 mm 10.2 x 6.9 x 5.51 in	174 x 174 x 140 mm 6.9 x 6.9 x 5.51 in	260 x 174 x 140 mm 10.2 x 6.9 x 5.51 in
Weight, approx. (with packaging)	6 kg (13.2 lbs)	6.9 kg (15.2 lbs)	6.1 kg (13.4 lbs)	7 kg (15.4 lbs)
Protection class	IP 66/NEMA 7B	IP 65/NEMA 7B	IP 66/NEMA 7B	IP 65/NEMA 7B

(1) 8.5 W at each of 4 outputs.

(2) Refer to individual installation instructions for mounting dimensions.

Notes:

Mount the FLEX System

Step 6 – Select:

•panel mount or DIN rail mount

•appropriate number of panels or DIN rails based on the number of modules and the physical requirements

•one end cap per controller system

You can horizontally or vertically mount the FLEX I/O or FLEX Ex I/O system on a standard 35 mm DIN rail. The adapter and terminal base unit easily snap on the DIN rail by hand. Use a flat-blade screwdriver to remove components from the DIN rail.

Screw holes allow you to horizontally or vertically panel-mount your system in an enclosure. Maintain at least 25 mm (1 in.) of air space around your FLEX system.

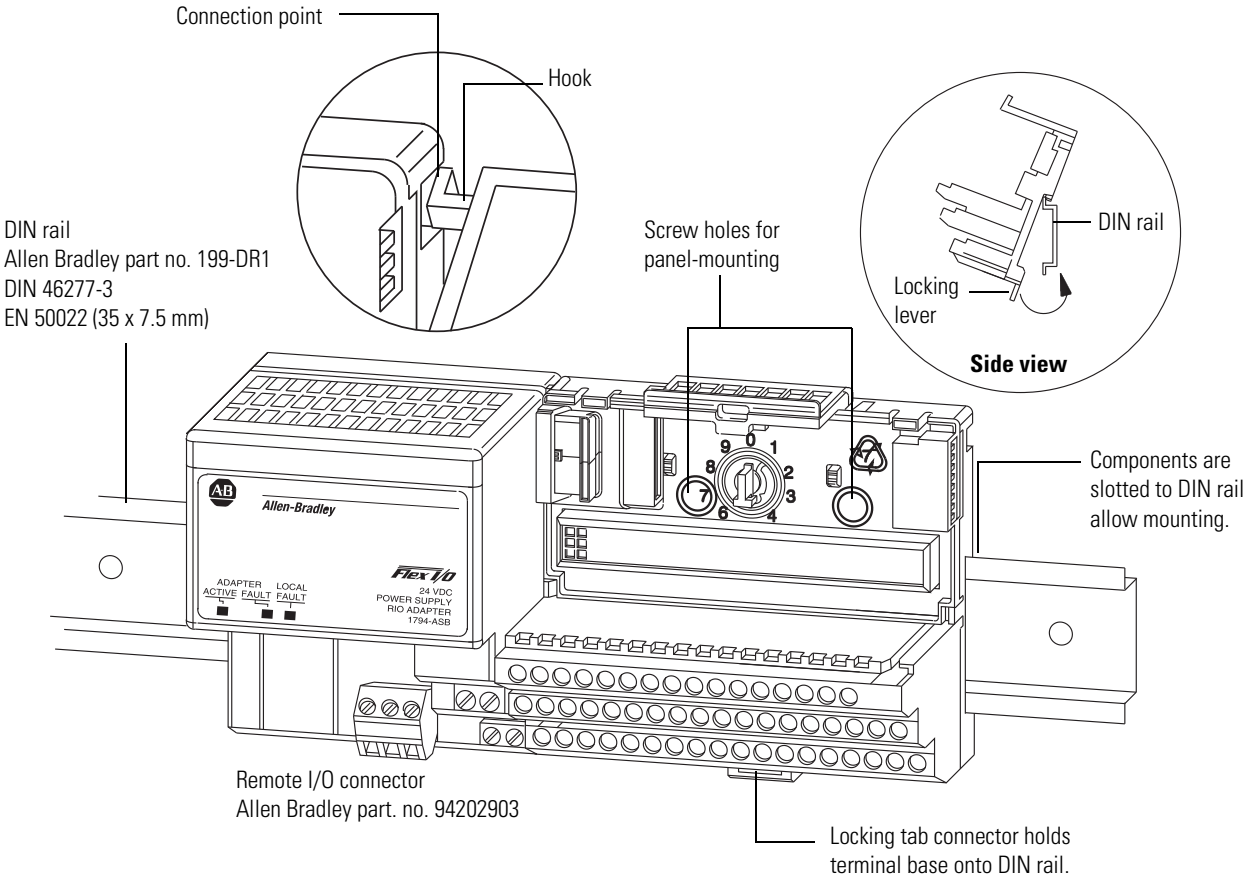

When properly installed, FLEX I/O and FLEX Ex I/O are grounded through the DIN rail to chassis ground. Use a zinc-plated, yellow-chromated steel DIN rail to assure proper grounding. Using other DIN rail materials, for example, aluminum or plastic, which can corrode, oxidize, or are poor conductors can result in improper or intermittent platform grounding.

If installing FLEX on non-recommended DIN rail materials, use the mounting holes provided with each terminal base, or use a 1794-NM1 mounting kit with an approved mounting bracket. Use mounting screws with star washers to provide the FLEX platform with a chassis ground connection that is not likely to be affected by shock, vibration, or oxidation over time.

The hook (on the terminal base unit) and adjacent connection point (on the communication adapter) keep the terminal base units tight together. These components are capable of maintaining a reliable connection in case of shock and/or vibration. Refer to the environmental specifications section for each module.

Select Optional Accessories

Step 5 – Select:

optional accessories for FLEX I/O and FLEX I/O-XT modules

1794-CE1 and 1794-CE3 Extender Cables

Use one optional 1794-CE1 – 0.3 m (1 ft) or 1794-CE3 – 0.9 m (3 ft) extender cable, per system, to arrange your system in two rows or split your system into horizontal and vertical orientation. The cable can be used between any module or between adapters and modules.

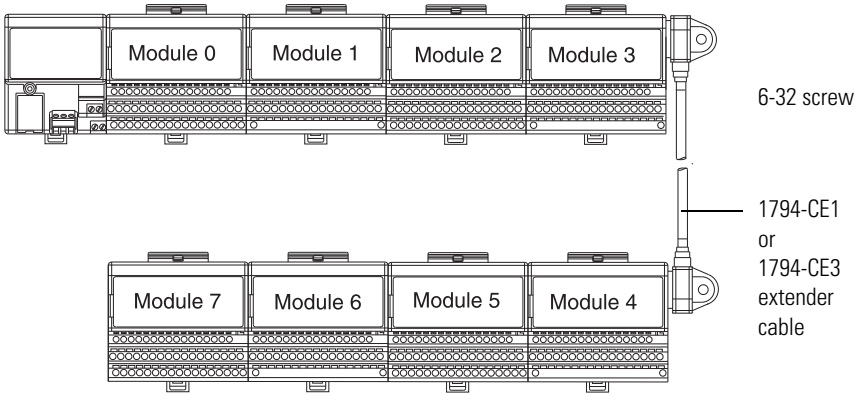

1794-NM1 FLEX I/O Mounting Kit

Use the optional 1794-NM1 FLEX I/O mounting kit to mount your FLEX I/O system on a panel without a DIN Rail.

1794-NM1 mounting kit with 18 screws (2 screws for the adapter and 2 screws for each module)

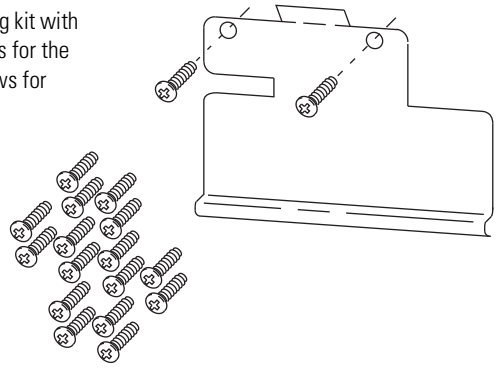

1492-EA35 DIN Rail Locks

When you use FLEX I/O modules in a high-vibration installation, and particularly when mounting the modules vertically, we recommend using DIN-rail locks (Allen-Bradley part number 1492-EA35).

1794-LBL FLEX I/O Label Kit

Use the label kit to tailor the label on your FLEX I/O terminal base unit to meet your needs. The label kit includes a diecut drawing and label sheet with five labels.

1794-N2 FLEX I/O Dummy Filler Module

This module is used to fill in an otherwise empty slot: a terminal base with no I/O module. It contains no electronics.

1794-CJC2

This Cold Junction Compensation kit contains two replacements for the CJCs supplied with 1794-IT8 and 1794-IRT8 modules.

Step 5 – Select:

optional accessories for FLEX Ex I/O modules

1797-BOOT ControlNet BNC Boot

Use the ControlNet BNC boot, trunk isolator, and marking kit in your cable connections.

The 1797-BOOT covers the BNC connector on the ControNet Ex trunk cable. The kit contains 50 pieces.

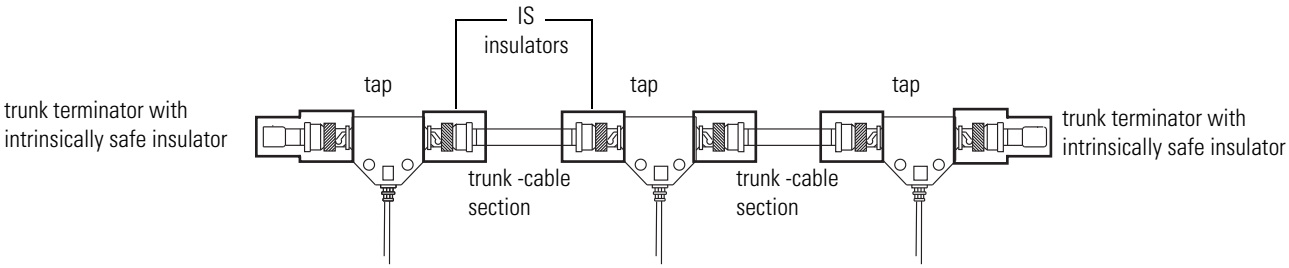

1797-INS Trunk Insulator and 1797-EXMK Marking Kit

The 1797-INS is a bag of 50 assorted insulators that you can use to replace those shipped with the product. The 1797-EXMK is a marking kit for FLEX Ex cable, containing 100 pieces.

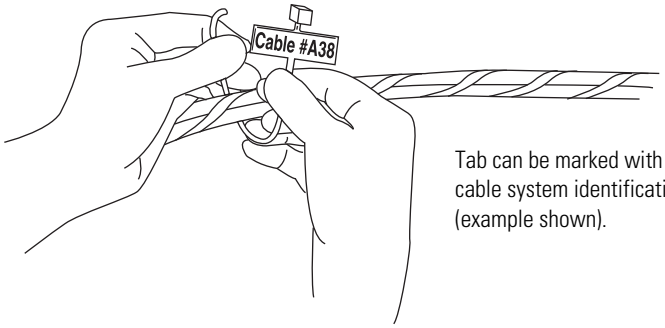

Tab can be marked with cable system identification (example shown).

ControlNet Ex Taps

1797-TPS ControlNet Ex Straight T-Tap

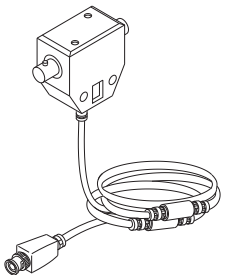

1797-TPR ControlNet Ex Right-Angle T-Tap

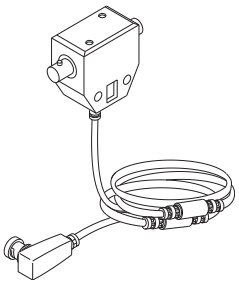

1797-TPYS ControlNet Ex Straight Y-Tap

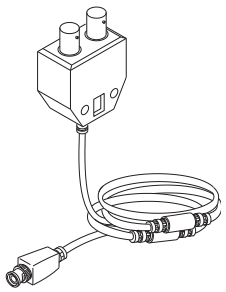

1797-TPYR ControlNet Ex Right-Angle Y-Tap

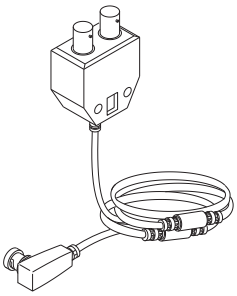

1797-XT ControlNet Ex 75Ω Terminator

The terminator is sold in lots of 50.

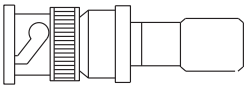

1797-TCAP ControlNet Tap Terminator

This kit contains five pieces.

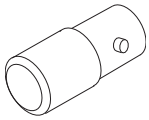

1786-RG6 Coax Trunk Cable

The 1786-RG6 Coax Trunk Cable can be used in Flex Ex applications in hazardous areas.

Notes:

Related Documentation

FLEX I/O and FLEX I/O-XT

Additional user documentation presents information according to the tasks you perform and the programming environment you use. Refer to the table for information on 1794 FLEX I/O, FLEX I/O-XT publications.

1794 FLEX I/O and FLEX IO-XT Related Publications

Type	Catalog Number	Installation Instructions	Publication Title	User Manual
Adapters	1794-AENT	1794-IN082	FLEX I/O EtherNet/IP Adapter Module	ENET-UM006
	1794-AENTR	1794-IN131	FLEX I/O Dual Port EtherNet/IP Adapter Modules	1794-UM066
	1794-AENTRXT			
	1794-ACN15	1794-IN128	FLEX I/O ControlNet Adapter Modules	CNET-UM001
	1794-ACN15K(1)			
	1794-ACNR15			
	1794-ACNR15XT			
	1794-ADN	1794-IN099	FLEX I/O DeviceNet Adapter Modules	
	1794-ADNK			
	1794-ASB2(1)	1794-IN098	FLEX I/O Remote I/O Adapter Modules	
	1794-ASB2K			
	1794-ASB(1)			1794-UM009
	1794-ASBLT(1)	1794-IN110	FLEX I/O Remote I/O Adapter Module	—

1794 FLEX I/O and FLEX IO-XT Related Publications

Type	Catalog Number	Installation Instructions	Publication Title	User Manual
Bases	1794-TB2	1794-IN092	FLEX I/O Terminal Base Units	—
	1794-TB3			
	1794-TB3K			
	1794-TB3S			
	1794-TB3SK			
	1794-TB32			
	1794-TB32S			
	1794-TB3T			
	1794-TB3TK			
	1794-TB3TS			
	1794-TB3TSK			
	1794-TB3G			
	1794-TB3GK			
	1794-TB3GS			
	1794-TB3GSK			
	1794-TBKD(1)			
	1794-TBN			
	1794-TBNK			
	1794-TBNF			
	1794-TB3GT	1794-IN133	FLEX I/O Grounded Cage Clamp Temperature Terminal Base Unit	—
	1794-TB62DS	1794-IN107	FLEX I/O D-Shell Terminal Base Units and Distribution Boards	—
	1794-TB37DS			
	1794-TB62EXD4X15(1)			
	1794-TB37EXD4CM8(1)			
	1794-TB37EXD4VM8(1)			
	1203-FB1	—	Installation 1203-FB1 FLEX I/O SCANport Base	1203-UM000

1794 FLEX I/O and FLEX IO-XT Related Publications

Type	Catalog Number	Installation Instructions	Publication Title	User Manual
AC	1794-IA8	1794-IN102	FLEX I/O AC Digital Input Modules	—
	1794-IA8I			
	1794-IA16			
	1794-IM8	1794-IN104	FLEX I/O 220V AC Digital Input and Output Modules	
	1794-IM16	1794-IN123	FLEX I/O 240V AC Digital Input and Output Modules	
	1794-OA8	1794-IN103	FLEX I/O AC Digital Output Modules	
	1794-OA8K [1]			
	1794-OA8I			
	1794-OA16			
	1794-OM8	1794-IN104	FLEX I/O 220V AC Digital Input and Output Modules	
	1794-OM16	1794-IN123	FLEX I/O 240V AC Digital Input and Output Modules	
DC	1794-IB8	1794-IN093	FLEX I/O Digital Input Modules	
	1794-IB16			
	1794-IB16D	1794-IN096	FLEX I/O Digital Input and Output Modules with Diagnostics	1794-UM061
	1794-IB16XT	1794-IN124	FLEX I/O-XT Digital DC Input and Output Modules	—
	1794-IB10XOB6	1794-IN083	FLEX I/O Digital Input and Output Modules	
	1794-IB10XOB6XT	1794-IN124	FLEX I/O-XT Digital DC Input/Output Modules	
	1794-IB16XOB16P	1794-IN083	FLEX I/O Digital Input and Output Modules	
	1794-IC16	1794-IN105	FLEX I/O 48V DC Digital Input and Output Modules	
	1794-IG16	1794-IN119	FLEX I/O 5V DC TTL Digital Input and Output Modules	
	1794-IH16	1794-IN118	FLEX I/O 125V DC Digital Input Module	

1794 FLEX I/O and FLEX IO-XT Related Publications

Type	Catalog Number	Installation Instructions	Publication Title	User Manual
DC	1794-IV16	1794-IN095	FLEX I/O Digital Sourcing Input and Sinking Output Modules	—
	1794-IB32	1794-IN093	FLEX I/O Digital Input Modules	
	1794-IV32	1794-IN122	FLEX I/O Digital Sourcing Input and Sinking Output Modules	
	1794-OB8	1794-IN094	FLEX I/O Digital DC Output Modules	
	1794-OB8EP			
	1794-OB8EPXT	1794-IN124	FLEX I/O-XT Digital DC Input and Output Modules	
	1794-OB16	1794-IN094	FLEX I/O Digital DC Output Modules	
	1794-OB16P			
	1794-OB16D	1794-IN096	FLEX I/O Digital Input and Output Modules with Diagnostics	1794-UM061
	1794-OB16PXT	1794-IN124	FLEX I/O-XT Digital DC Input and Output Modules	—
	1794-OB32P	1794-IN094	FLEX I/O Digital DC Output Modules	
	1794-OC16	1794-IN105	FLEX I/O 48V DC Digital Input and Output Modules	
	1794-OG16	1794-IN119	FLEX I/O 5V DC TTL Digital Input and Output Modules	
	1794-OV16	1794-IN095	FLEX I/O Digital Sourcing Input and Sinking Output Modules	
	1794-OV16P			
	1794-OV32	1794-IN122	FLEX I/O Digital Sourcing Input and Sinking Output Modules	
Relay	1794-OW8	1794-IN019	FLEX I/O 8-Channel Relay Output Modules	
	1794-OW8XT			

1794 FLEX I/O and FLEX IO-XT Related Publications

Type	Catalog Number	Installation Instructions	Publication Title	User Manual
Analog	1794-IE8	1794-IN100	FLEX I/O Input, Output and Input/Output Analog Modules	1794-UM062
	1794-IE8XT	1794-IN125	FLEX I/O-XT Input, Output and Input/Output Analog Modules	
	1794-IE12	1794-IN106	FLEX I/O 12-Channel DC Input, Output, and Input/Output Analog Modules	
	1794-IE8H	1794-IN108	FLEX I/O 8-Channel Input HART Analog Module	1794-UM063
	1794-OE4	1794-IN100	FLEX I/O Input, Output and Input/Output Analog Modules	1794-UM002
	1794-OE4XT	1794-IN125	FLEX I/O-XT Input, Output and Input/Output Analog Modules	
	1794-OE8H	1794-IN108	FLEX I/O 8-Channel Input HART Analog Module	1794-UM063
	1794-OE12	1794-IN106	FLEX I/O 12-Channel DC Input, Output, and Input/Output Analog Modules	—
	1794-IE4XOE2	1794-IN100	FLEX I/O Input, Output and Input/Output Analog Modules	1794-UM002
	1794-IE4XOE2XT	1794-IN125	FLEX I/O-XT Input, Output and Input/Output Analog Modules	1794-UM062
	1794-IE8XOE4	1794-IN106	FLEX I/O 12-Channel DC Input, Output, and Input/Output Analog Modules	
Isolated Analog	1794-IF4I	1794-IN038	FLEX I/O 4-Channel Isolated Input Analog Module	1794-UM008
	1794-IF4IXT	1794-IN129	FLEX I/O-XT Isolated Input Analog Modules	
	1794-IF4ICFXT	1794-IN130	FLEX I/O-XT Isolated Input Analog Module	
	1794-IF8IH	1794-IN115	FLEX I/O 8-Channel Isolated Input HART Analog Module	1794-UM065
	1794-IF8IHNFXT	1794-IN134	FLEX I/O-XT 8-Channel Isolated Input HART Analog Module	
	1794-OF4I	1794-IN037	FLEX I/O Isolated Output Analog Module	1794-UM008
	1794-OF4IXT	1794-IN129	FLEX I/O-XT Isolated Output Analog Modules	
	1794-OF8IH	1794-IN120	FLEX I/O Isolated Output HART Analog Module	1794-UM065
	1794-IF2XOF2I	1794-IN039	FLEX I/O Isolated Input/Output Analog Module	1794-UM008
	1794-IF2XOF2IXT	1794-IN129	FLEX I/O-XT Isolated Input Analog Modules	
Specialty	1794-IR8	1794-IN021	FLEX I/O 8-Channel Thermocouple Input Analog Module and RTD Module	1794-UM004
	1794-IRT8	1794-IN050	FLEX I/O Thermocouple/RTD Input Analog Modules	1794-UM012
	1794-IRT8XT			
	1794-IT8	1794-IN021	FLEX I/O 8-Channel Thermocouple Input Analog Module and RTD Module	1794-UM004

1794 FLEX I/O and FLEX IO-XT Related Publications

Type	Catalog Number	Installation Instructions	Publication Title	User Manual
Counters	1794-IJ2	1794-IN049	FLEX I/O 2 Input Frequency Modules	1794-UM011
	1794-IJ2XT			
	1794-VHSC	1794-IN067	FLEX I/O Very High Speed Counter Module	—
	1794-ID2	1794-IN063	FLEX I/O 2-Channel Incremental Encoder Module	1794-UM015
	1794-IP4	1794-IN064	FLEX I/O 4-Channel Pulse Counter Module	1794-UM016
Power Supply	1794-PS3	1794-IN069	FLEX I/O Power Supply Modules	—
	1794-PS13			
Accessories	1794-CE1	1794-IN012	FLEX I/O Interconnect Cable	
	1794-CE3			

(1) Discontinued catalogs may not have updated specifications. For more information about a specific discontinued catalog, refer to individual installation instructions.

FLEX Ex I/O

Additional user documentation presents information according to the tasks you perform and the programming environment you use. Refer to the table for information on 1794 FLEX Ex I/O publications.

1797 FLEX Ex I/O Related Publications

	Catalog Number	Description	Publication
Communication	1797-ACNR15	ControlNet Ex Redundant Media Adapter Installation Instructions	1797-IN014
	1797-RPA	ControlNet Ex Modular Repeater Adapter & Fiber Repeater Module Installation Instructions	1797-IN015
	1797-RPFM		
Intermixed	1797-BIC	FLEX Ex Bus Isolator and FlexBus Connector Installation Instructions	1797-IN513
	1797-CEC		
	1797-BCNR	FLEX Ex Redundant ControlNet Barrier Module Installation Instructions	1797-IN536
Bases	1797-TB3	FLEX Ex Terminal Base Units Installation Instructions	1794-IN001
	1797-TB3S		
Digital	1797-IBN16	FLEX Ex NAMUR Input Module Installation Instructions	1797-IN007
	1797-OB4D	FLEX Ex 24V DC Non-Isolated Source Output Module Installation Instructions	1797-IN006
Analog	1797-IE8	FLEX Ex Analog Module User Manual	1797-UM002
	1797-IE8H	FLEX Ex HART Analog Module User Manual	1797-UM005
	1797-IE8NF	FLEX Ex Analog Module User Manual	1797-UM002
	1797-IRT8	FLEX Ex Thermocouple/RTD Module Installation Instructions	1797-IN004
		FLEX Ex Thermocouple/RTD/mV Input Module User Manual	1797-UM003
Analog	1797-OE8	FLEX Ex Analog Modules User Manual	1797-UM002
	1797-OE8H	FLEX Ex 8 Output and HART Analog Module Installation Instructions	1797-IN003
		FLEX Ex HART Analog Modules User Manual	1797-UM005
Counter	1797-IJ2	FLEX Ex Frequency Input Module Installation Instructions	1797-IN009

1797 FLEX Ex I/O Related Publications

	Catalog Number	Description	Publication
Power supplies	1797-PS1N	FLEX Ex 85…250V AC In/Quad-Ex DC Out Power Supply Installation Instructions	1797-IN534
	1797-PS1E	FLEX Ex 85…253V AC In/Quad-Ex DC Out Power Supply Installation Instructions	1797-IN533
	1797-PS2N2	FLEX Ex Power Supply Installation Instructions	1797-IN012
	1797-PS2E2	FLEX Ex Power Supply Installation Instructions	1797-IN535
Accessories	1797-EXMK	FLEX Ex Cable Marking Kit Installation Instructions	1797-IN023
	1797-TCAP	ControlNet Tap Terminator Installation Instructions	1797-IN030

For More Information

If you would like a manual, you can:

- download a free electronic version from the Internet: http://www.rockwellautomation.com/literature/
- purchase a printed manual by contacting your local Allen-Bradley distributor or Rockwell Automation representative.

(6)

OPERATOR INTERFACE

Specification Section 13700

ALLEN BRADLEY

PANEL VIEW
2713P-T6CD1

Technical Data

Original Instructions

Allen-Bradley

PanelView 5310 Terminals Specifications

Catalog Numbers 2713P-T6CD1, 2713P-T6CD1-B, 2713P-T6CD1-K, 2713P-T7WD1, 2713P-T7WD1-B, 2713P-T7WD1-K, 2713P-T9WD1, 2713P-T9WD1-B, 2713P-T9WD1-K, 2713P-T10CD1, 2713P-T10CD1-B, 2713P-T10CD1-K, 2713P-T12WD1, 2713P-T12WD1-B, 2713P-T12WD1-K

Topic	Page
Summary of Changes	2
Environmental Specifications	2
Certifications	2
Technical Specifications	3
Terminal Dimensions	4
Studio 5000 Environment	5
Accessories	5
Additional Resources	7

The PanelView™ 5310 terminals are operator interface devices that monitor and control devices attached to ControlLogix® 5570 and 5580, and CompactLogix™ L1, L2, and L3 controllers over an EtherNet/IP™ network. Animated graphic and text displays provide operators with a view into the operating state of a machine or process. Operators interact with the control system by using the touch screen.

The PanelView 5310 terminals include these features and capabilities:

- Tightly integrated control and design environment allows information to be shared between the PanelView 5310 terminal and the Logix platforms.
- The Studio 5000® environment provides one point of access for the Studio 5000 View Designer® and Studio 5000 Logix Designer® applications.(1)
- Connection to one ControlLogix 5570, ControlLogix 5580, or CompactLogix L1, L2, or L3 controller with revision 27 firmware or later.
- Supports a maximum of 100 user-defined screens.
- Supports a maximum of 4,000 Logix-based alarms.(1)
- Easily configured screen navigation menu.
- Conformal coating available for all terminal sizes.

(1) PanelView 5310 firmware can support up to 4,000 Logix-based alarms in a single controller if you use Studio 5000 View Designer application version 5 and Studio 5000 Logix Designer application version 32 or higher. Of the 4,000 alarms, no more than 1,000 can be instruction-based. Earlier versions of the Studio 5000 View Designer or Studio 5000 Logix Designer applications can support up to 1,000 Logix-based alarms.

Summary of Changes

This publication contains new and updated information as indicated in this table.

Topic	Page
Added catalog numbers for the PanelView 5310 conformal-coated terminals.	1
Added a statement about conformal coating to the bulleted list.	1
Added a line to the Technical Specifications table for conformal coating availability. Also added catalog numbers for the conformal-coated terminals to this table.	3
Added catalog numbers for protective overlays that are available for the PanelView 5310 terminals.	6

Environmental Specifications

This table provides environmental specifications for the PanelView 5310 terminals.

Attribute	Value
Temperature, operating	0…50 °C (32…122 °F)
Temperature, nonoperating	-25…+70 °C (-13…+158 °F)
Relative humidity	5…95% without condensation
Vibration	0.012 pk-pk, 10…57 Hz 2 g peak at 57…500 Hz
Shock, operating	15 g at 11 ms
Shock, nonoperating	30 g at 11 ms
Altitude, operating	Sea level to 2,000 m (6,562 ft)
Enclosure ratings	NEMA and UL Type 4X, 12, 13, and classified by UL as IP66 (when mounted on a flat surface of an equivalent enclosure)

Certifications

This table provides certification information for the PanelView 5310 terminals.

Certification(1)	Value
c-UL-us	c-UL-us Listed to UL 61010-1, UL 61010-2-201, CAN/CSA-C22.2 No. 61010-1, and CAN/CSA-C22.2 No. 61010-2-201; see 2713P-CT002
CE (EMC)	European Union EMC Directive, compliance with: • EN 61131-2; Programmable Controllers (pertinent EMC sections); see 2713P-CT004
EAC	Russian Customs Union TP TC 020/2011 EMC Technical Regulation; see 2713P-CT001
EtherNet/IP	ODVA conformance tested to EtherNet/IP specifications; see 2713P-CT005
KC	KC registered; see 2713P-CT001
RCM	Australian Radiocommunications Act, compliance with: • EN 61000-6-4; Industrial Emissions; see 2713P-CT003
Morocco	Moroccan EMC Directive, compliance with: • NM EN 61131-2; Programmable Controllers EMC; see 2713P-CT008
RoHS	• China RoHS • European RoHS • Turkey RoHS (EEE Yönetmeliğine Uygundur. In Conformity with the EEE Regulation.) • UAE RoHS ENV-CT001

(1) When marked. See the Rockwell Automation® Product Certifications site at rok.auto/certifications for declarations of conformity, certificates, and other certification details.

Technical Specifications

This section provides technical specifications for the PanelView 5310 terminals.

Technical Specifications - PanelView 5310 Terminals

Attribute	6-in. Touch 2713P-T6CD1 2713P-T6CD1-B(1) 2713P-T6CD1-K(2)	7-in. Wide Touch 2713P-T7WD1 2713P-T7WD1-B(1) 2713P-T7WD1-K(2)	9-in. Wide Touch 2713P-T9WD1 2713P-T9WD1-B(1) 2713P-T9WD1-K(2)	10.4-in. Touch 2713P-T10CD1 2713P-T10CD1-B(1) 2713P-T10CD1-K(2)	12.1-in. Wide Touch 2713P-T12WD1 2713P-T12WD1-B(1) 2713P-T12WD1-K(2)
Operator input	Touch				
Conformal coated	Yes				
Display type	Color TFT LCD (thin-film-transistor, liquid-crystal display)				
Display size, diagonal	5.7-in. screen	7-in. widescreen	9-in. widescreen	10.4-in. screen	12.1-in. widescreen
View area, W x H	115 x 86 mm (4.5 x 3.4 in.)	152 x 91 mm (6.0 x 3.6 in.)	196 x 118 mm (7.7 x 4.6 in.)	211 x 158 mm (8.3 x 6.2 in.)	261 x 163 mm (10.3 x 6.4 in.)
Display resolution/ aspect ratio	640 x 480 VGA/4:3	800 x 480 WVGA/5:3	800 x 480 WVGA/5:3	800 x 600 SVGA/4:3	1280 x 800 WXGA/16:10
Color depth	24-bit color graphics (16.7 million colors)				
Brightness, typical	300 cd/m^2 (Nits)				
Backlight	• Light-emitting diode, non-replaceable • Life: 50,000 h min at 40 °C (104 °F) to half-brightness				
Backlight power consumption, typical	2.4 W	3 W	3.5 W	4 W	5 W
Touch screen	• Analog resistive • Actuation rating: 1 million presses • Operating force: <100 grams				
Battery (real-time clock backup)	• Accuracy: +/-2 minutes per month. • Battery life: 4 years min at 25 °C (77 °F) • Replacement: CR2032 lithium coin cell				
Memory RAM User available	 1 GB RAM 1 GB nonvolatile storage for projects				
Secure Digital (SD) card slot	One SD card slot for external storage; supports cat. no. 1784-SD*x* cards. See Secure Digital (SD) Cards on page 6.				
USB ports Host Device	 One USB high-speed 2.0 host port (type A) supports removable drives for external storage. One high-speed 2.0 device port (type B) supports connection to host computer (available in a future release).				
Ethernet port	One 10/100Base-T, Auto MDI/MDI-X Ethernet port for controller communication.				
Status indicators	STS (status, green), ERR (error, red)				
Software	Studio 5000 environment provides single portal to View Designer and Logix Designer applications.				
Electrical					
USB host port (type A)	0.5 A at 5V DC				
Input voltage	24V DC nom (18…30V DC)				
Power consumption, max	13 W		14 W	15 W	16 W
Power consumption, typical	9 W		11 W	12 W	12 W
Power dissipation	31 BTU/hr.		38 BTU/hr.	41 BTU/hr.	41 BTU/hr.

Technical Specifications - PanelView 5310 Terminals (Continued)

Attribute	6-in. Touch 2713P-T6CD1 2713P-T6CD1-B(1) 2713P-T6CD1-K(2)	7-in. Wide Touch 2713P-T7WD1 2713P-T7WD1-B(1) 2713P-T7WD1-K(2)	9-in. Wide Touch 2713P-T9WD1 2713P-T9WD1-B(1) 2713P-T9WD1-K(2)	10.4-in. Touch 2713P-T10CD1 2713P-T10CD1-B(1) 2713P-T10CD1-K(2)	12.1-in. Wide Touch 2713P-T12WD1 2713P-T12WD1-B(1) 2713P-T12WD1-K(2)
Inrush current, max	15 A				
Power supply	Supports safety extra low voltage and protected extra low voltage 24V DC supplies(3)(4)				
Mechanical					
Weight, approx	0.79 kg (1.7 lb)	2.0 kg (4.4 lb)	2.41 kg (5.31 lb)	3.35 kg (7.39 lb)	3.65 kg (8.0 lb)
Terminal dimensions, approx	See PanelView 5310 Terminal and Cutout Dimensions on this page.				
Cutout dimensions, approx	See PanelView 5310 Terminal and Cutout Dimensions on this page.				

(1) Add -B to the end of a catalog number to order a terminal without the Allen-Bradley® logo and product identification, for example, 2713P-T7WD1-B.
(2) Add -K to the end of a catalog number to order a terminal with conformal coating, for example, 2713P-T6CD1-K.
(3) DC-powered terminals support safety extra low voltage (SELV) and protective extra-low voltage (protected extra low voltage) 24V DC power supplies, such as catalog numbers 1606-XLP95E, 1606-XLP100E, and 2711P-RSACDIN.
(4) Where PELV is defined in IEC 61131-2.

Terminal Dimensions

This section provides dimensions for the PanelView 5310 terminals. The 9-inch widescreen terminal is shown for illustrative purposes. All other terminal sizes look similar.

PanelView 5310 Terminal Dimensions - (9-in. widescreen terminal shown)

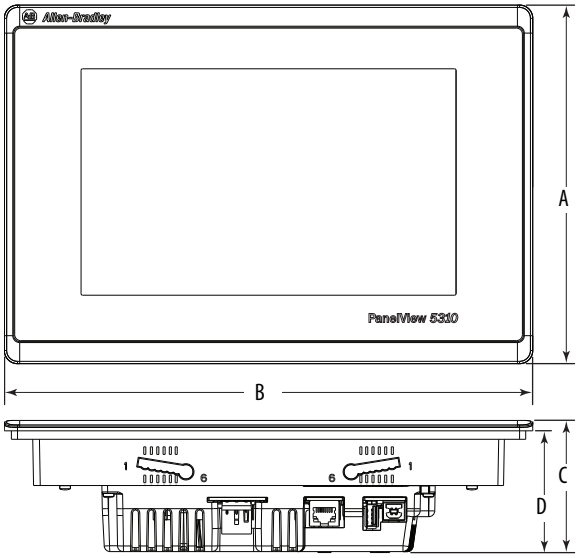

PanelView 5310 Terminal and Cutout Dimensions

Terminal Size (in.)	Input Type	Terminal Dimensions				Cutout Dimensions	
		Height (A) mm (in.)	Width (B) mm (in.)	Overall Depth (C) mm (in.)	Mounted Depth (D) mm (in.)	Height (A) mm (in.)	Width (B) mm (in.)
6	Touch	153 (6.0)	186 (7.3)	69.5 (2.74)	64 (2.5)(1)	123 (4.84)	156 (6.14)
7		178 (7.0)	237 (9.3)			148 (5.82)	207 (8.15)
9		190 (7.48)	280 (11.02)			162 (6.38)	252 (9.92)
10.4		252 (9.92)	297 (11.69)			224 (8.82)	269 (10.59)
12.1		246 (9.69)	340 (13.39)			218 (8.58)	312 (12.28)

(1) When mounted in a panel, the front of the bezel extends less than 6 mm (0.24 in.) from the panel.

SOFTWARE TO BE USED

Studio 5000 Environment

Use the Studio 5000 environment to create HMI applications for the PanelView 5310 terminal platform. This environment includes these major components:

- **Studio 5000 View Designer** – you can create and design a project for a specific PanelView 5310 terminal and download the project to the terminal.

  You can create an application for any PanelView 5310 terminal and reuse that same application across the entire platform.
- **Studio 5000 Logix Designer** – you can develop control logic for a CompactLogix or ControlLogix controller and download the logic to the controller.



In the Studio 5000 environment, you can create an application for any PanelView 5310 terminal and reuse that same application across the entire platform.

Accessories

This section lists accessories for the PanelView 5310 terminals.

Power Supplies and Replacement Power Terminal Blocks

Cat. No.	Description	Quantity
1606-XLB120E	DIN rail power supply, 24…28V DC output voltage, 120 W	1
1606-XLP100E	DIN rail power supply, 24…28V DC output voltage, 100 W	1
1606-XLP95E	DIN rail power supply, 24…28V DC output voltage, 95 W	1
2711P-RSACDIN	DIN rail power supply, AC-to-DC, 85…265V AC, 47…63 Hz	1
2711-TBDC	3-pin DC power terminal block	10

Mounting Hardware

Cat. No.	Description	Quantity
2711P-RMCP(1)	Mounting levers (black)	16

(1) Catalog number 2711P-RMCP mounting levers are used with the PanelView 5310 terminals. Do not use gray mounting levers; they are not compatible with PanelView 5310 terminals.

Secure Digital (SD) Cards(1)

Cat. No.	Description
1784-SD1	1 GB SD card
1784-SD2	2 GB SD card
1784-SDHC8	8-GB SDHC card
1784-SDHC32	32-GB SDHC card
2711C-RCSD	USB to SD adapter for SD card

(1) To help reduce the chance of corruption when you use SD Cards or USB drives with the terminal, Rockwell Automation recommends that you use only the above SD card catalog numbers.

The SD™ and SDHC™ accessory cards in the above table have been designed to meet industrial robustness and environmental requirements. Rockwell Automation recommends that you use these accessory cards with the terminal to help reduce the chances of corruption. Studio 5000 View Designer software requires the following for SD cards that are inserted into the HMI device:

- 4 GB of free space
- A supported SDHC card type, preferably one listed in the Secure Digital (SD) Cards table
- An environmental rating for the PanelView 5000 environment
- A supported format of either FAT32 or ext3

USB Programming Cable

Cat. No.	Description	Length
6189V-USBCBL2	Programming cable that connects the device port of the terminal to a USB host port of a computer	1.8 m (5.9 ft)

Battery Replacement

Cat. No.	Description	Quantity
2711P-RY2032	Lithium coin cell battery, CR2032 equivalent	1

Protective Overlays

Cat. No.(1)	Display Size	Quantity
2711P-RGT6S	6-in.	3
2711P-RGT7SP	7-in. widescreen	
2711P-RGT9SP	9-in. widescreen	
2711P-RGT10SP	10.4-in.	
2711P-RGT12SP	12.1-in. widescreen	

(1) Although these protective overlays were designed for the PanelView 5510 terminals, they can also be used for the PanelView 5310 terminals. However, when these overlays are used on a PanelView 5310 terminal, there is an increased air gap between the overlay and the terminal screen.

User Manual

Original Instructions

Allen-Bradley

PanelView 5310 Terminals

Catalog Numbers 2713P-T6CD1, 2713P-T6CD1-B, 2713P-T6CD1-K, 2713P-T7WD1, 2713P-T7WD1-B, 2713P-T7WD1-K, 2713P-T9WD1, 2713P-T9WD1-B, 2713P-T9WD1-K, 2713P-T10CD1, 2713P-T10CD1-B, 2713P-T10CD1-K, 2713P-T12WD1, 2713P-T12WD1-B, 2713P-T12WD1-K









Important User Information

Read this document and the documents listed in the additional resources section about installation, configuration, and operation of this equipment before you install, configure, operate, or maintain this product. Users are required to familiarize themselves with installation and wiring instructions in addition to requirements of all applicable codes, laws, and standards.

Activities including installation, adjustments, putting into service, use, assembly, disassembly, and maintenance are required to be carried out by suitably trained personnel in accordance with applicable code of practice.

If this equipment is used in a manner not specified by the manufacturer, the protection provided by the equipment may be impaired.

In no event will Rockwell Automation, Inc. be responsible or liable for indirect or consequential damages resulting from the use or application of this equipment.

The examples and diagrams in this manual are included solely for illustrative purposes. Because of the many variables and requirements associated with any particular installation, Rockwell Automation, Inc. cannot assume responsibility or liability for actual use based on the examples and diagrams.

No patent liability is assumed by Rockwell Automation, Inc. with respect to use of information, circuits, equipment, or software described in this manual.

Reproduction of the contents of this manual, in whole or in part, without written permission of Rockwell Automation, Inc., is prohibited.

Throughout this manual, when necessary, we use notes to make you aware of safety considerations.

	**WARNING:** Identifies information about practices or circumstances that can cause an explosion in a hazardous environment, which may lead to personal injury or death, property damage, or economic loss.
	**ATTENTION:** Identifies information about practices or circumstances that can lead to personal injury or death, property damage, or economic loss. Attentions help you identify a hazard, avoid a hazard, and recognize the consequence.
IMPORTANT	Identifies information that is critical for successful application and understanding of the product.

Labels may also be on or inside the equipment to provide specific precautions.

	**SHOCK HAZARD:** Labels may be on or inside the equipment, for example, a drive or motor, to alert people that dangerous voltage may be present.
	**BURN HAZARD:** Labels may be on or inside the equipment, for example, a drive or motor, to alert people that surfaces may reach dangerous temperatures.
	**ARC FLASH HAZARD:** Labels may be on or inside the equipment, for example, a motor control center, to alert people to potential Arc Flash. Arc Flash will cause severe injury or death. Wear proper Personal Protective Equipment (PPE). Follow ALL Regulatory requirements for safe work practices and for Personal Protective Equipment (PPE).

Preface

Summary of Changes 7
Package Contents 7
Request Corresponding Source for Open Source Packages 8
Product Firmware and Release Notes 8
Additional Resources 9

Chapter 1

Overview

About the PanelView 5310 Terminals 11
Hardware Features 12
Operator Control 13
Touch Gestures 13
Studio 5000 Environment 14
EtherNet/IP Communication 15
Typical Configuration 15
Catalog Number Explanation 16
Product Selections 16
Accessories 16
Ethernet Cables 17

Chapter 2

Install the PanelView 5310 Terminal

Installation Precautions 20
- Environment and Enclosure Information 20
- Wiring and Safety Guidelines 21
- Outdoor Installation Recommendations 21

Mounting Considerations 23
Mounting Clearances 23
Panel Guidelines 24
Panel Cutout Dimensions 24
Terminal Dimensions 25
Prepare for Panel Mounting 26
Mount the Terminal in a Panel 29
Remove and Replace Power Terminal Block 32
Connect Power 33
Connect to a Network 34
- Ethernet Port 34
- Linear Network Topology 36
- Star Network Topology 36

Initial Startup 37
- Update the Firmware before You Use the Terminal 37

Chapter 3

Configure Terminal Settings

Runtime Environment. 39
Enter Data With Virtual Keyboards 41
Log On to the Terminal 43
Log Off of the Terminal 44
Settings Menu 44
Configure the IP Address of the Terminal 46
Use DHCP to Assign an IP Address for the Terminal 46
Assign a Static IP Address for the Terminal 47
Configure a DNS Address for the Terminal 48
Configure the Ethernet Port 49
View the Network Diagnostics 50
Export a Data Log. 51
Adjust the Brightness of the Display 52
Configure the Display Screen Saver 53
Calibrate the Touch Screen 54
Disable Downloads to the Terminal 56
Change the HMI Device Name 57
View the Firmware Revision 58
Display Terminal Diagnostics 59
Enable the VNC Server 60
Load an Application from Removable Media 61
Reboot the Terminal 62
Change the Date and Time 63
View General Information for the Configured Controller 64

Chapter 4

Monitor and Manage Control System Alarms

Alarm Indicator. 65
Alarm Help Menu. 66
View the Alarm Summary. 68
Manage the Alarms. 69
Alarm Detail Pane Descriptions 70
Filter the Alarms 72

Chapter 5

Install and Replace Components

Accessories and Replacement Parts 75
Voltage Precautions 75
Electrostatic Discharge Precautions 76
Connect to USB Ports. 76
USB Cables 77
Insert an SD Card. 77
Replace the Battery. 78

Update Firmware

Chapter 6

Before You Begin. 81
Firmware Requirements 81
Get the Terminal Firmware 82
Install the ControlFLASH Software 82
Update the Firmware by Using ControlFLASH Software 83
Verify the Firmware Update 85

Troubleshooting

Chapter 7

Status Indicators 88
View Diagnostic Information for the Configured Controller. 89
Troubleshooting Profiles. 89
    Import a Troubleshooting Profile 90
    Export a Troubleshooting Log. 91
Terminal Does Not Start Up. 93
Terminal Restarts Intermittently 93
Touch Screen Issues 93
Display Issues 94
Ethernet Issues. 95
Cannot Download Application to Terminal. 95
Performance Is Slow. 95
Resistance to Chemicals 96
Clean the Display 96
    Remove Paint and Grease 96
    Equipment Wash Downs 97
Ship the Terminal. 97
Restore Factory Defaults. 97
Dispose of the Terminal 98

Index

. 99

Notes:

This manual describes how to install, configure, operate, and troubleshoot the PanelView™ 5310 terminals. This manual does not provide procedures on how to create applications that run on the terminals, or ladder logic that runs in the controller.

Other tasks that you must do include:

- Configure the Ethernet settings and update the firmware of the terminal.

  IMPORTANT You must configure the Ethernet settings and update the firmware before you can download a View Designer project and use the terminal. See Initial Startup on page 37.

- Create a project by using the Studio 5000 View Designer® application.
- Create control logic for the controller by using the Studio 5000 Logix Designer® application.

Summary of Changes

This manual contains new and updated information as indicated in the following table.

Topic	Page
Added catalog numbers for the PanelView 5310 conformal-coated terminals.	—
Added a statement about conformal coating to the bulleted list.	11
Updated the Catalog Number Explanation table with conformal coating catalog numbers.	16
Added conformal coating catalog numbers to the Product Selection table.	16
Added instructions on how to configure the keypad size.	42
Added instructions for modifying the PanelView 5000 screen color settings by using HMI device tags.	54
Added instructions on how to load an application from removable media.	63
Added instructions on how to view and export the alarm history.	78

Package Contents

The PanelView 5310 terminals ship with these items.

Item	Description
Hardware	• Mounting levers for panel installation • Removable DC power terminal block
Documents	• PanelView 5310 Terminals Product Information, publication 2713P-PC001 • Cutout Templates for PanelView 5310 Terminals, publication 2713P-DS001

Request Corresponding Source for Open Source Packages

The software included in this product contains copyrighted software that is licensed under one or more open source licenses. Copies of those licenses are included with the software. Corresponding Source for open source packages included in this product can be found at the websites identified in the product documentation.

You may alternately obtain complete Corresponding Source by contacting Rockwell Automation via our Contact form on the Rockwell Automation website: http://www.rockwellautomation.com/global/about-us/contact/contact.page. Please include 'Open Source' as part of the request text.

IMPORTANT	Do not modify the DMK file. The DMK file is used in firmware updates and a modified DMK file can cause the firmware update to fail.

Product Firmware and Release Notes

Product firmware and release notes are available online at the Product Compatibility and Download Center at https://compatibility.rockwellautomation.com/Pages/home.aspx.

1. On the PCDC home page, search for your product.

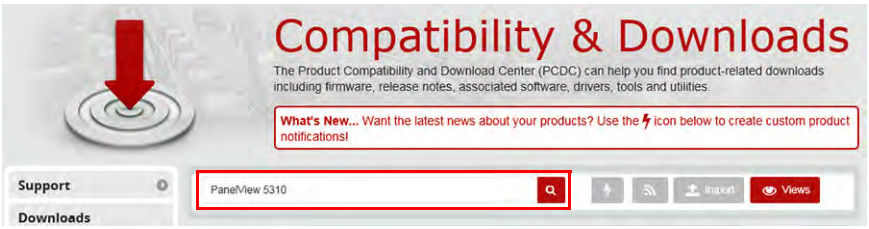

2. On the search results page, find the firmware and release notes for your product.

See the Product Compatibility and Download Center Quick Start Guide, publication PCDC-QS001, for instructions on how to find and download firmware and release notes for the terminal.

Additional Resources

These documents contain additional information about related products from Rockwell Automation.

Resource	Description
PanelView 5310 Terminals Specifications Technical Data, publication 2713P-TD001	Provides specifications and certifications for the PanelView 5310 terminal.
Industrial Automation Wiring and Grounding Guidelines, publication 1770-4.1	Provides general guidelines for installing a Rockwell Automation industrial system.
Guidelines for Handling Lithium Batteries Technical Data, publication AG-5.4	Provides guidelines to store, handle, install, and dispose of lithium batteries.
Safety Guidelines for the Application, Installation, and Maintenance of solid-state Controls, publication SGI-1.1	Provides general guidelines for the application, installation, and maintenance of solid-state equipment.
Product Certifications website, rok.auto/certifications	Provides declarations of conformity, certificates, and other certification details.

You can view or download publications at http://www.rockwellautomation.com/global/literature-library/overview.page.

Notes:

Overview

Topic	Page
About the PanelView 5310 Terminals	11
Hardware Features	12
Operator Control	13
Touch Gestures	13
Studio 5000 Environment	14

Topic	Page
EtherNet/IP Communication	15
Typical Configuration	15
Catalog Number Explanation	16
Product Selections	16
Accessories	16

About the PanelView 5310 Terminals

The PanelView™ 5310 terminals are operator interface devices that monitor and control devices attached to ControlLogix controllers, CompactLogix™ 5370, 5380, or 5480 controllers, or CompactLogix L1, L2, or L3 controllers over an EtherNet/IP™ network. Animated graphic and text displays provide operators with a view into the operating state of a machine or process. Operators interact with the control system by using the touch screen.

The PanelView 5310 terminals include these features and capabilities:

- Tightly integrated control and design environment allows information to be shared between the PanelView 5310 terminal and the Logix platforms.
- The Studio 5000® environment provides one point of access for the Studio 5000 View Designer® and Studio 5000 Logix Designer® applications.(1)
- Connection to one ControlLogix, CompactLogix 5370, 5380, or 5480 controller, or CompactLogix L1, L2, or L3 controller with revision 27 firmware or later.
- Supports a maximum of 100 user-defined screens.
- Supports a maximum of 4,000 Logix-based alarms.(1)
- Easily configured screen navigation menu.
- Conformal coating available for all terminal sizes.

(1) PanelView 5310 firmware can support up to 4,000 Logix-based alarms in one controller if you use Studio 5000 View Designer application version 5 and Studio 5000 Logix Designer application version 32 or higher. Of the 4,000 alarms, no more than 1,000 can be instruction-based. Earlier versions of the Studio 5000 View Designer or Studio 5000 Logix Designer applications can support up to 1,000 Logix-based alarms.

Hardware Features

The PanelView 5310 terminal features fixed-hardware configurations in a range of display sizes with touch screen input.

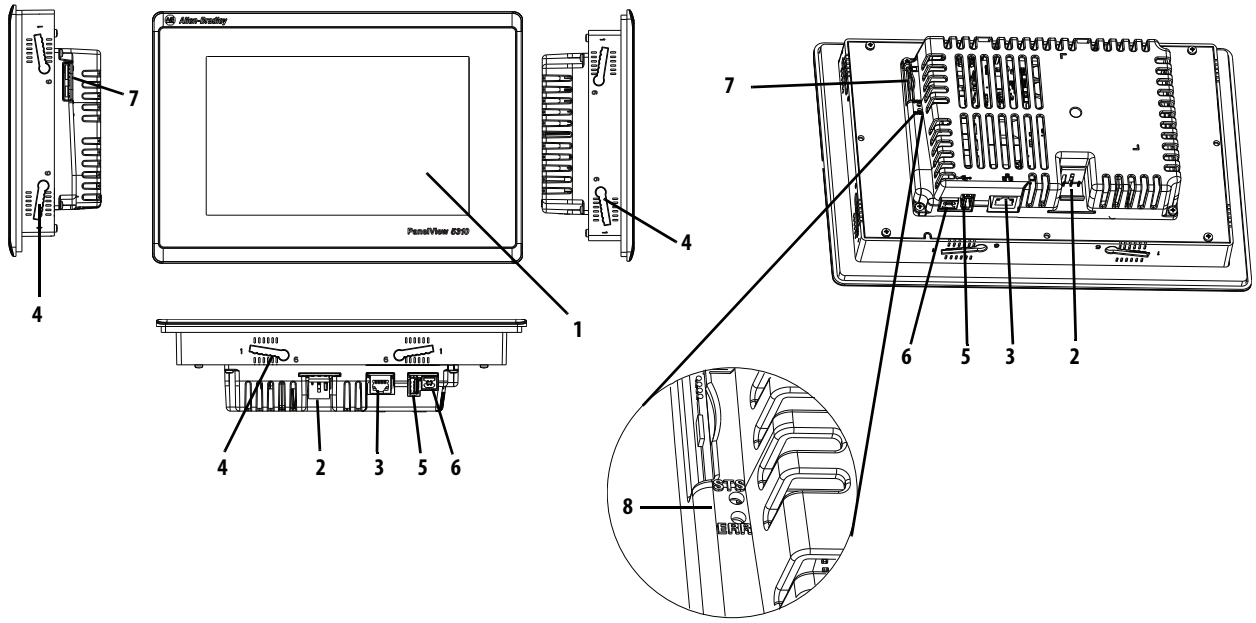

Table 1 - Hardware Features

Item	Feature	Description
1	Display/Touch screen	TFT color, SVGA, VGA, WVGA, or WXGA graphic display with a touch screen available in sizes of 5.7-in., 7-in., 9-in., 10.4-in., and 12.1-in.
2	Power	24V DC nom (18…30V DC) non-isolated power input
3	Ethernet port	One 10/100Base-T, Auto MDI/MDI-X, EtherNet/IP port for controller communication.
4	Mounting slots	Mounting levers insert into the slots to mount device in a panel or enclosure. The number of slots varies by terminal size.
5	Universal serial bus (USB) host port	One USB 2.0 high-speed (type A) host port.
6	USB device port	One USB 2.0 high-speed (type B) device port to connect a host computer that is software-feature dependent.
7	SD card slot	One slot that supports an SD™ or SDHC™ card that is recommended in Table 5 on page 17.
8	Status Indicators	STS indicator (green) indicates that the terminal is on and in use. ERR indicator (red) indicates hardware and firmware faults.

Operator Control

All PanelView 5310 terminals have a color display with a touch screen for operator control. The resistive touch screen provides accurate, durable touch control for industrial applications.

ATTENTION: The touch screen accepts input from a finger, stylus, or gloved hand for operation in dry or wet environments.

The plastic stylus must have a minimum tip RADIUS of 1.3 mm (0.051 in.). Any other object or tool can damage the touch screen.

ATTENTION: Do not perform multiple operations simultaneously. Multiple simultaneous operations can result in unintended operation.

Touch only one operating element on the screen with one finger at a time.

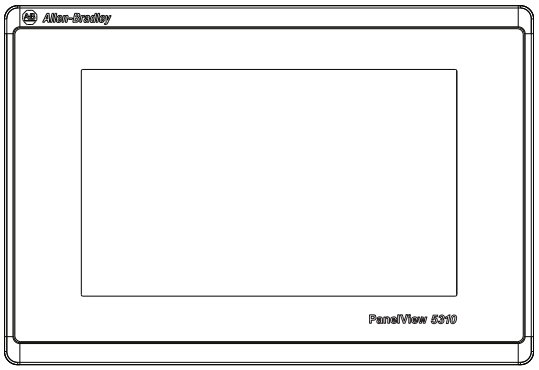

TIP During runtime, a virtual keyboard or numeric keypad opens on HMI displays for data entry.

Touch Gestures

The PanelView 5310 terminal supports touch gestures to interact with screen elements during runtime. Standard touch gestures include:

- **Tap** – Briefly touch the target on the HMI display with your fingertip.
- **Drag** – Move your fingertip over the target on the HMI display without contact loss.

For a list of actions you can perform by using touch gestures, see the View Designer help.

Studio 5000 Environment

Use the Studio 5000 environment to create HMI applications for the PanelView 5310 terminal.



The Studio 5000 environment includes these applications:

- **View Designer** – you can create and design a project for a specific PanelView 5310 terminal and download the project to the terminal.

  You can create an application for any PanelView 5310 terminal and reuse that same application across the entire platform.
- **Logix Designer application** – you can develop control logic for a CompactLogix or ControlLogix controller and download the logic to the controller.

Figure 1 - How Studio 5000 Applications Work Together

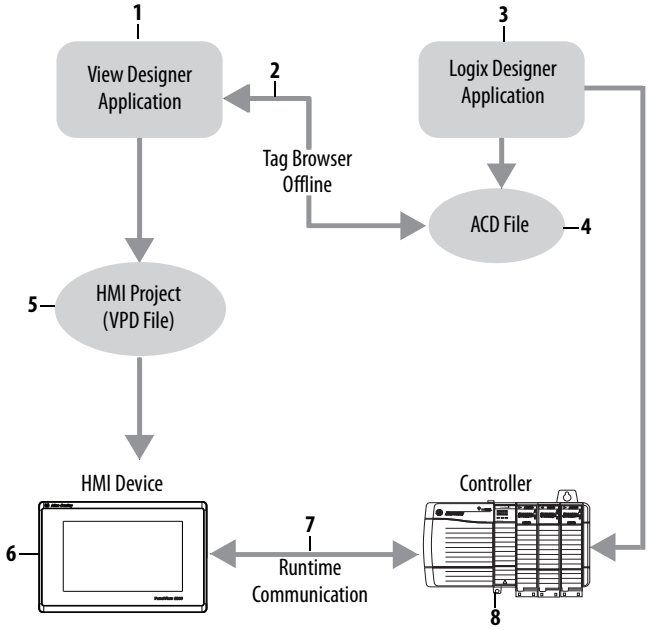

Table 2 describes how the View Designer and Logix Designer applications work together to create an HMI runtime project.

Table 2 - Studio 5000 Applications and Tools

Item	Component	Description
1	View Designer application	A Studio 5000 application that is used to build HMI projects. Studio 5000 View Designer projects are stored as VPD files that can be downloaded to the PanelView 5310 terminal.
2	Tag browser	A tool that is used to search for and select tags within a Studio 5000 Logix Designer application ACD project file. You can bind the tags to graphic element properties and properties of an HMI display. The Studio 5000 View Designer application uses the tag browser to read data from an ACD file.
3	Logix Designer application	A Studio 5000 application that is used to develop control logic for an industrial automation system. The Studio 5000 Logix Designer application interfaces with controllers to read and write tag information. Studio 5000 Logix Designer application projects are stored as ACD files that can be downloaded to the controller.
4	ACD file	An Automation Controller Database (ACD) file. An ACD file is a Logix Designer application project file that contains the logic or code, including tags and data types, which runs within a controller.
5	HMI project (VPD file)	A View Project Database (VPD) file. A VPD project is a file that contains the operator interface application, including HMI displays, controller references, and information about the HMI device to run the application.
6	HMI device	A Human Machine Interface (HMI) device, such as the PanelView 5310 terminal, which runs the HMI project. At runtime, the HMI device communicates directly with the controller.
7	Runtime	The environment in which the runtime HMI project communicates with the controller. During runtime, the HMI device runs the downloaded project, exchanges data with the controller, animates displayed data, and responds to operator input.
8	Controller	A logic controller such as a ControlLogix or CompactLogix controller.

EtherNet/IP Communication

The PanelView 5310 terminals contain EtherNet/IP technology. These terminals communicate with ControlLogix or CompactLogix controllers over an Ethernet connection with linear network topologies. Star technology is also supported when using switches.

Typical Configuration

Linear and star network topologies are supported. See these topics for examples:

- Linear Network Topology on page 36
- Star Network Topology on page 36

Catalog Number Explanation

This table provides an explanation of the catalog numbers.

Bulletin	Input Type	Display Size	Display Type	Power	Ethernet Port	–	Special Option
	|	|	|	|	|	|
2713P-	**T** = Touch	**6** = 5.7-in.	**C** = Color, 4:3 aspect ratio	**D** = DC	**1** = Single	–	**B** = Without brand identity[2]
		7 = 7-in.	**W** = Color, widescreen[1] aspect ratio				**K** = Conformal coating[3]
		9 = 9-in.					
		10 = 10.4-in.					
		12 = 12.1-in.					

(1) Depending on the PanelView 5310 terminal model, the widescreen aspect ratio is either 5:3 or 16:10. For further details, see the Product Selections section on this page.
(2) A catalog number with -B at its end (for example, 2713P-T9WD1-B) is a terminal without the Allen-Bradley logo and product identification on the front bezel.
(3) A catalog number with -K at its end (for example, 2713P-T6CD1-K) is a terminal with conformal coating.

Product Selections

This table provides information for the product selections.

Cat. No.	Display				Input Power	Ethernet Port	Memory	
Touch Screen	Display Size	Type	Aspect Ratio	Pixels (W x H)			RAM	User[1]
2713P-T6CD1 2713P-T6CD1-B 2713P-T6CD1-K	5.7-in.	VGA TFT color	4:3	640 x 480	DC	One	1 GB	1 GB
2713P-T7WD1 2713P-T7WD1-B 2713P-T7WD1-K	7-in.	WVGA TFT color	5:3	800 x 480				
2713P-T9WD1 2713P-T9WD1-B 2713P-T9WD1-K	9-in.							
2713P-T10CD1 2713P-T10CD1-B 2713P-T10CD1-K	10.4-in.	SVGA TFT color	4:3	800 x 600				
2713P-T12WD1 2713P-T12WD1-B 2713P-T12WD1-K	12.1-in.	WXGA TFT color	16:10	1280 x 800				

(1) Nonvolatile memory that is available to store projects.

Accessories

Table 3 through Table 7 list accessories for the PanelView 5310 terminals.

Table 3 - Power Supplies and Power Terminal Blocks

Cat. No.	Description	Quantity
1606-XLB120E	DIN rail power supply, 24…28V DC output voltage, 120 W	1
1606-XLP100E	DIN rail power supply, 24…28V DC output voltage, 100 W	1
1606-XLP95E	DIN rail power supply, 24…28V DC output voltage, 95 W	1
2711P-RSACDIN	DIN rail power supply, AC-to-DC, 85…265V AC, 47…63 Hz	1
2711-TBDC	3-pin DC power terminal block	10

Table 4 - Mounting Hardware

Cat. No.	Description	Quantity
2711P-RMCP(1)	Mounting levers (black)	16

(1) Use catalog number 2711P-RMCP mounting levers (black) for PanelView 5310 terminals. Do not use gray mounting levers; they are not compatible with PanelView 5310 terminals.

Table 5 - Secure Digital (SD) Cards (1)

Cat. No.	Description	Quantity
1784-SD1	1-GB SD card	1
1784-SD2	2-GB SD card	1
1784-SDHC8	8-GB SDHC card	1
1784-SDHC32	32-GB SDHC card	1
2711C-RCSD	USB to SD adapter for SD card	1

(1) To help reduce the chance of corruption when you use SD Cards or USB drives with the terminal, Rockwell Automation recommends that you use only the above SD card catalog numbers.

SD™ and SDHC™ accessory cards in Table 5 have been designed to meet industrial robustness and environmental requirements. Rockwell Automation recommends that you use these accessory cards with the terminal to help reduce the chances of corruption. Studio 5000 View Designer software requires the following for SD cards that are inserted into the HMI device:

- 4 GB of free space if the project uses data logging
- A supported SDHC card type, preferably one listed in Table 5
- An environmental rating for the PanelView 5310 environment
- A supported format of either FAT32 or ext3

Table 6 - USB Programming Cable

Cat. No.	Description	Length
6189V-USBCBL2	Programming cable that connects the device port of the terminal to a USB host port of a computer.	1.8 m (5.9 ft)

Table 7 - Battery Replacement

Cat. No.	Description	Quantity
2711P-RY2032	Lithium coin-cell battery, CR2032 equivalent	1

Table 8 - Protective Overlays

Cat. No.(1)	Display Size	Quantity
2711P-RGT6S	6-in.	3
2711P-RGT7SP	7-in. widescreen	
2711P-RGT9SP	9-in. widescreen	
2711P-RGT10SP	10.4-in.	
2711P-RGT12SP	12.1-in. widescreen	

(1) Although these protective overlays were designed for the PanelView 5510 terminals, they can also be used for the PanelView 5310 terminals. However, when these overlays are used on a PanelView 5310 terminal, there is an increased air gap between the overlay and the terminal screen.

Ethernet Cables

See the Industrial Ethernet Media Brochure, publication 1585-BR001, for recommended Ethernet cables and media solutions.

See the USB to Serial Adapter Quick Start Guide, publication GMSC10-QS003, for information on USB to serial port adapters.

Install the PanelView 5310 Terminal

Topic	Page
Installation Precautions	20
Mounting Considerations	23
Mounting Clearances	23
Panel Guidelines	24
Panel Cutout Dimensions	24
Terminal Dimensions	25
Prepare for Panel Mounting	26
Mount the Terminal in a Panel	29
Remove and Replace Power Terminal Block	32
Connect Power	33
Connect to a Network	34
Initial Startup	37



ATTENTION: Do not use a PanelView™ 5310 terminal for emergency stops or other controls critical to the safety of personnel or equipment. Use separate hard-wired operator interface devices that do not depend on solid-state electronics.

Installation Precautions

Read and follow these precautions before you install the PanelView 5310 terminal.

Environment and Enclosure Information



ATTENTION: This equipment is intended for use in a Pollution Degree 2 industrial environment, in overvoltage Category II applications (as defined in IEC 60664-1), at altitudes up to 2000 m (6561 ft) without derating. The terminals are intended for use with programmable logic controllers.

This equipment is considered Group 1, Class A industrial equipment according to IEC CISPR 11. Without appropriate precautions, there can be difficulties with electromagnetic compatibility in residential and other environments due to conducted or radiated disturbances.

Korean Radio Wave Suitability Registration - When so marked this equipment is registered for Electromagnetic Conformity Registration as business equipment (A), not home equipment. Sellers or users are required to take caution in this regard.

이 기기는 업무용 (A 급) 전자파적합기기로서 판 매자 또는 사용자는 이 점을 주의하시기 바 라 며 , 가정외의 지역에서 사용하는 것을 목적으 로 합니다 .

This equipment is supplied as open-type equipment. It must be mounted within an enclosure that is suitably designed for those specific environmental conditions that can be present, and appropriately designed to help prevent personal injury resulting from accessibility to live parts. The interior of the enclosure must be accessible only by the use of a tool. The terminals meet specified NEMA, UL Type, and IEC ratings only when mounted in a panel or enclosure with the equivalent rating. Subsequent sections of this publication can contain additional information regarding specific enclosure type ratings that are required to comply with certain product safety certifications.

In addition to this publication, see the following:

- Industrial Automation Wiring and Grounding Guidelines, publication 1770-4.1, for additional installation requirements.
- NEMA 250 and IEC 60529, as applicable, for explanations of the degrees of protection provided by different types of enclosure.

Wiring and Safety Guidelines



ATTENTION: Use publication NFPA 70E, Electrical Safety Requirements for Employee Workplaces, IEC 60364 Electrical Installations in Buildings, or other applicable wiring safety requirements for the country of installation when wiring the devices. In addition to the NFPA guidelines, here are some other guidelines to follow:

- Connect the device and other similar electronic equipment to its own branch circuit.
- Protect the input power by a fuse or circuit breaker rated at no more than 15 A.
- Route incoming power to the device by a separate path from the communication lines.
- Cross power and communication lines at right angles if they must cross.
- Communication lines can be installed in the same conduit as low-level DC I/O lines (less than 10V).
- Shield and ground cables appropriately to avoid electromagnetic interference (EMI). Grounding minimizes noise from EMI and is a safety measure in electrical installations.

For more information on grounding recommendations, refer to the National Electrical Code published by the National Fire Protection Association.

Outdoor Installation Recommendations

When you use a PanelView 5310 terminal outdoors, follow these recommendations to maximize the field life of the front bezel and display:

- Do not expose terminal to direct sunlight
- Add UV protection and/or shielding
- Manage terminal temperature
- Mount terminal in an acceptable position
- Select a proper enclosure

Ultraviolet (UV) and infrared radiation can reduce the field life of any electronic terminal. While the materials used in the terminal bezels provide long field life, that life can be improved by proper installation and by following the suggested guidelines.

UV radiation from the sun causes all plastics to fade or yellow and become brittle over time. Avoid direct sunlight exposure, use a sacrificial antiglare overlay and/or use a shield to shade the terminal to help protect the front of the terminal from direct exposure to UV radiation and greatly increase its field life. When you install a sun shield that closes over the display, the temperature between the sun shield and the display cannot exceed the maximum temperature of the display, which is 50 °C (122 °F). Adequately ventilate all sun shields to help prevent excess heat rise on the terminal display.

Use stirring fans or active cooling in high altitude and high ambient temperature locations to keep the internal enclosure temperature below 50 °C (122 °F).

Verify that the ambient temperature at which the product is operating does not fall below its minimum rated 0 °C (32 °F).

Minimize the temperature differential between the inside of the terminal enclosure and the front panel to help reduce the potential for condensation and possible pressure variation between the inside and outside of the terminal.

If possible, avoid placing the terminal on the south (north in the southern hemisphere) or west side of the cabinet, which helps reduce the heat rise due to solar heating during the hottest part of the day.

Mount the terminal vertically to minimize solar heating on the display. Do not mount the terminal in a sloped enclosure if it exposes the terminal to direct sunlight. For more information, see Mounting Considerations on page 23.

To help protect the terminal from water and dust, mount it in a proper enclosure by following the instructions in the PanelView 5310 Terminals Product Information, publication 2713P-PC001. The terminals meet specified NEMA, UL Type, and IEC ratings only when properly mounted in a panel or enclosure with the equivalent rating. Other sections of this publication can contain additional information about specific enclosure type ratings that are required to comply with certain product safety certifications.



ATTENTION: Failure to follow the recommended installation practices for outdoor use can substantially reduce terminal life and void its warranty.

Mounting Considerations

Consider the following items when mounting the PanelView 5310 terminal:

- Figure 2 shows the acceptable mounting positions where the terminal functions properly.
- Mount the terminal at a height suitable for most operators.
- Mount the terminal in an area that has good lighting.
- Do not mount the terminal where it is exposed to direct sunlight.

Figure 2 - Acceptable Mounting Positions for PanelView 5310 Terminals

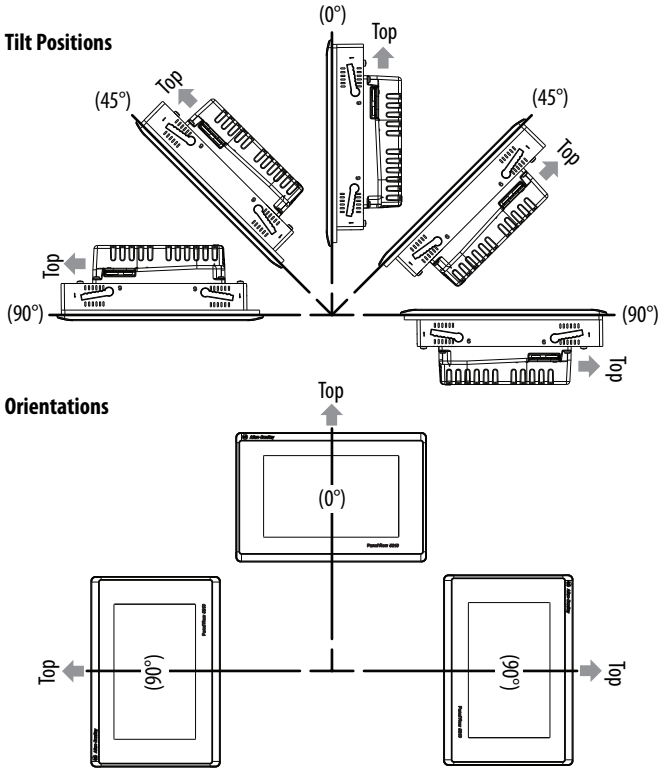

Mounting Clearances

Plan for adequate space around the terminal, inside the enclosure, for ventilation and cables. Consider the heat from other devices in the enclosure. The ambient temperature around the terminal must be 0...50 °C (32...122 °F).

Table 9 - Minimum Required Clearances

Terminal Area	Minimum Clearance
Top	51 mm (2 in.)
Bottom	102 mm (4 in.)
Side	25 mm (1 in.) 102 mm (4 in.) is required to insert and remove an SD™ or SDHC™ card, or cable on one side
Back	0 mm (0 in.)

Panel Guidelines

The terminals are panel-mounted devices that mount in the door or wall of a NEMA, UL Type, or IP rated enclosure:

- Enclosure panels must meet the panel thickness requirements in Table 11 on page 26.
- The material strength and stiffness of the panel must be sufficient to hold the terminal and maintain an appropriate seal against water and dust.
- The panel surface must be flat and free of imperfections to maintain an adequate seal and NEMA, UL Type, or IP ratings.

Panel Cutout Dimensions

Use the template that is shipped with your terminal to mark the cutout dimensions.

PanelView 5310 - Panel Cutout Dimensions

Terminal Size (in.)	Input Type	Height, mm (in.)	Width, mm (in.)
6	Touch	123 (4.84)	156 (6.14)
7		150 (5.9)	210 (8.25)
9		162 (6.38)	252 (9.92)
10.4		224 (8.82)	269 (10.59)
12.1		218 (8.58)	312 (12.28)

Terminal Dimensions

This section provides terminal dimensions.

Figure 3 - PanelView 5310 Terminal Dimensions (9-in. wide terminal shown)

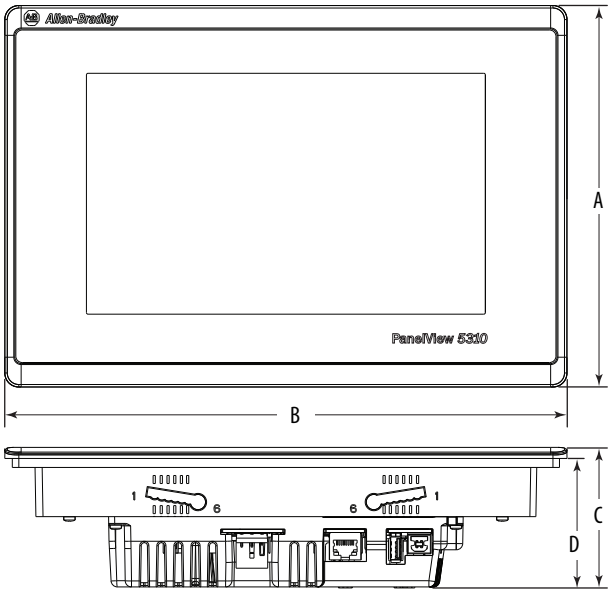

Table 10 - PanelView 5310 Terminal Dimensions

Display Size (in.)	Input Type	Height (A) mm (in.)	Width (B) mm (in.)	Overall Depth (C) mm (in.)	Mounted Depth (D) mm (in.)
6	Touch	153 (6)	186 (7.3)	69.5 (2.74)	64 (2.5)(1)
7		178 (7)	237 (9.3)		
9		190 (7.5)	280 (11)		
10.4		252 (9.92)	297 (11.69)		
12.1		246 (9.7)	340 (13.4)		

(1) When mounted in a panel, the front of the bezel extends less than 6 mm (0.24 in.) from the panel.

Prepare for Panel Mounting

Before mounting a terminal in a panel, read this section and the entire installation procedure on page 29.

IMPORTANT Use catalog number 2711P-RMCP mounting levers (black) for PanelView 5310 terminals. Do not use gray mounting levers; they are not compatible with PanelView 5310 terminals.

Mounting levers insert into the slots around the bezel to secure the terminal in the panel. The number of mounting levers varies by terminal size.

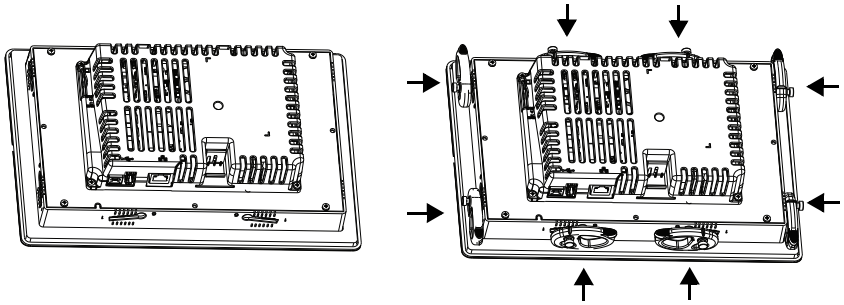

Each slot has six notches with alignment marks that are locking positions for a mounting lever. The thickness of the panel that you mount the terminal in determines the locking position that is required to maintain a NEMA, UL Type, and IP seal.

Table 11 - Mounting Lever Locking Positions

Mounting Slot	Mounting Lever Lock Position	Panel Thickness Range	Typical Gauge
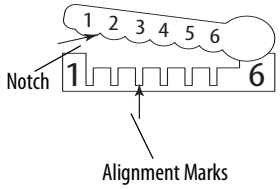	1	1.50…2.01 mm (0.060…0.079 in.)	16
	2	2.03…2.64 mm (0.08…0.104 in.)	14
	3	2.67…3.15 mm (0.105…0.124 in.)	12
	4	3.17…3.66 mm (0.125…0.144 in.)	10
	5	3.68…4.16 mm (0.145…0.164 in.)	8/9
	6	4.19…4.80 mm (0.165…0.188 in.)	7

Always orient a mounting lever vertically before inserting it into a slot. This method is the only way to slide the mounting lever knob within the slot for positioning. After sliding the mounting lever to a specific notch, rotate the mounting lever toward the panel to lock it in position. The flat side of the mounting lever must come into contact with the panel.

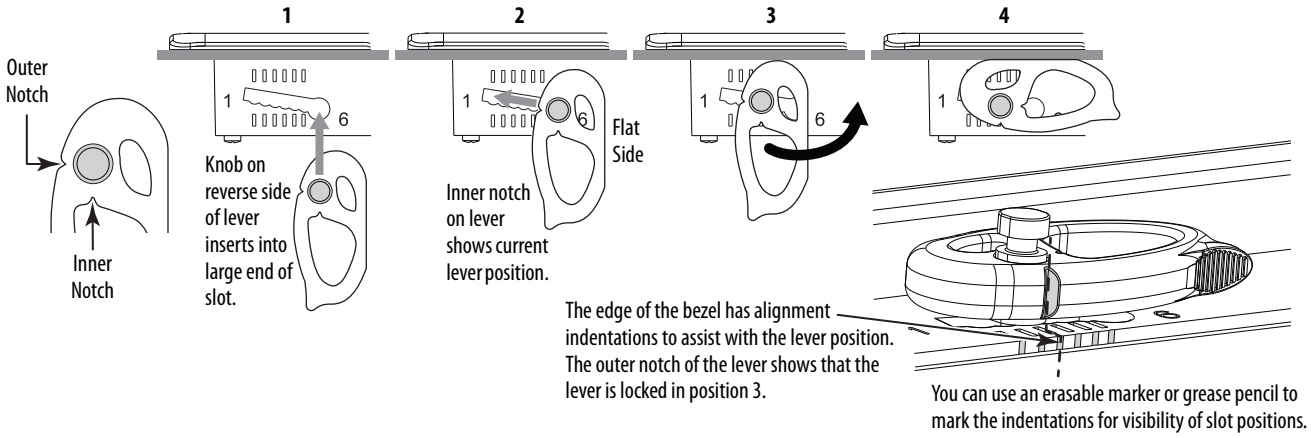

Initially, you secure the terminal in the panel by sliding each mounting lever to a position that is one or two notches greater than the final lock position. For example, if the final lock position is 1, slide each mounting lever to position 2 or 3. Follow the sequence specific to the terminal size shown in Figure 5 on page 28.

TIP If the lock position is 6, slide the mounting lever to the large end of the slot or insertion hole.

Figure 4 on page 27 shows the mounting lever orientation and locking sequence for a 9-in. terminal. See Figure 5 on page 28 for locking sequence and mounting lever orientations for all terminals.

Figure 4 - Mounting Levers Shown in Locked Position

All mounting levers are locked in position 4, which is appropriate for a panel thickness of 3.17…3.66 mm (0.125…0.144 in.).

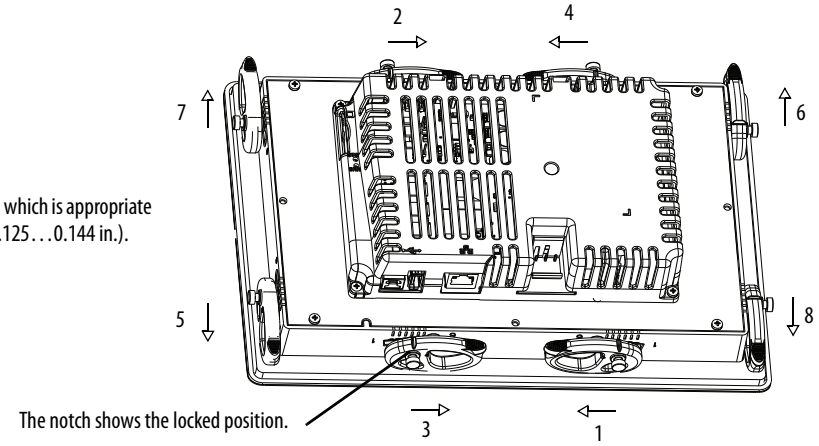

Figure 5 - Mounting Lever Orientation and Lock Sequence

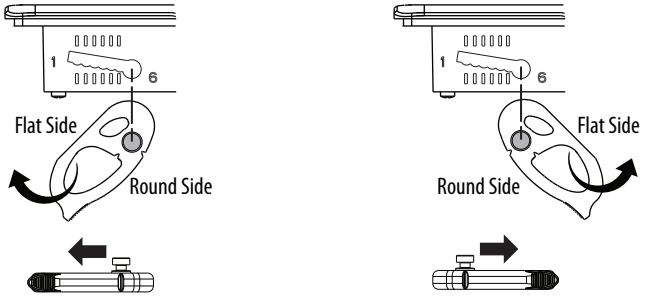

6-in. Touch Screen – 4 Levers

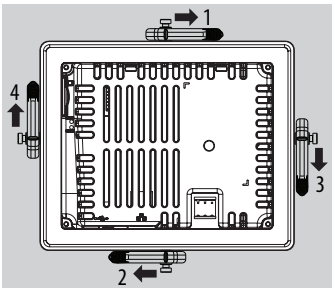

7-in. Touch Widescreen – 6 Levers

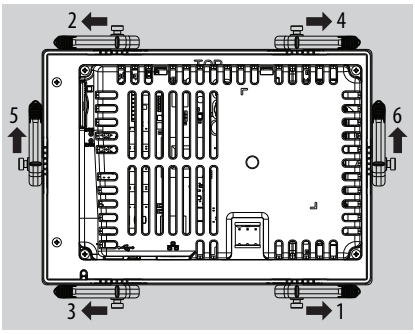

9-in. Touch Widescreen – 8 Levers

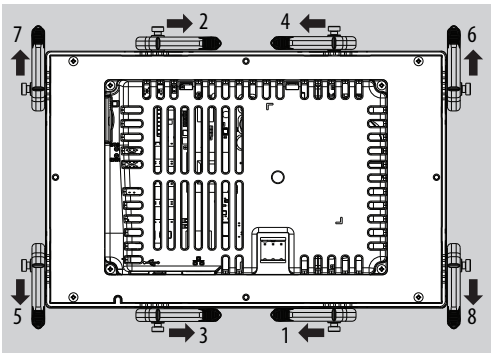

10.4-in. Touch Screen – 8 Levers

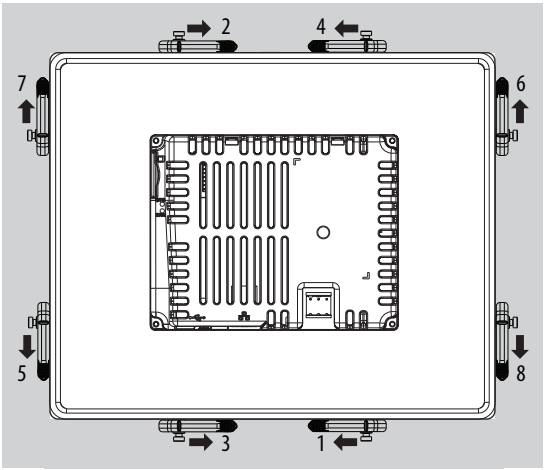

12.1-in. Touch Widescreen – 10 Levers

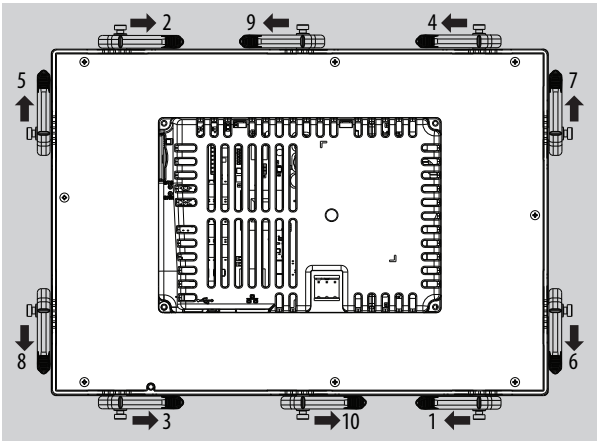

IMPORTANT The mounting lever orientations that are shown are required to maintain NEMA, UL Type, and IP seals. If you require a NEMA, UL Type, or IP seal, do not use a mounting lever in another orientation than shown.

Mount the Terminal in a Panel

The PanelView 5310 terminals are designed for single-person installation. No tools are required except for tools to make the panel cutout.

To mount the terminal in a panel, follow these steps.

ATTENTION: Disconnect all electrical power from the panel before making the panel cutout.

Make sure that the area around the panel cutout is clear and that the panel is clean of any debris, oil, or other chemicals.

Make sure that metal cuttings do not enter any components that are already installed in the panel and that the edges of the cutout have no burrs or sharp edges.

Failure to follow these precautions can result in personal injury or damage to panel components.

1. Use the cutout dimensions on page 24 to cut an opening in the panel.
2. Verify that the sealing gasket is present on the terminal.

   This gasket forms a compression seal. Do not use sealing compounds.

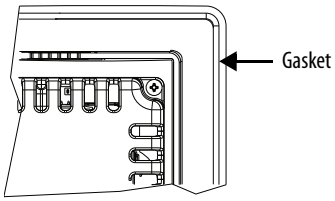

3. Insert and stabilize the terminal in the panel cutout.
   a. Insert levers in the top corner slots in the orientation that is shown and rotate the non-flat side of the levers toward panel.

TIP The mounting levers for PanelView 5310 terminals are black (catalog number 2711P-RMCP).

Do not use gray mounting levers; they are not compatible with PanelView 5310 terminals.

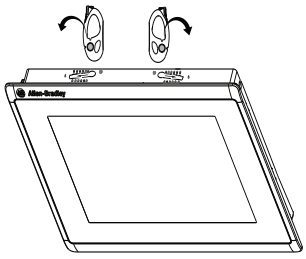

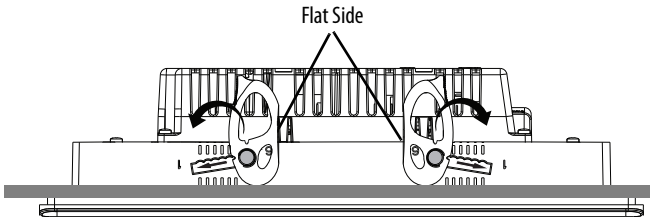

b. Tilt the terminal toward the panel cutout and guide upward into the cutout. Make sure that the levers stay intact.

TIP The levers help prevent the terminal from falling out of the panel.

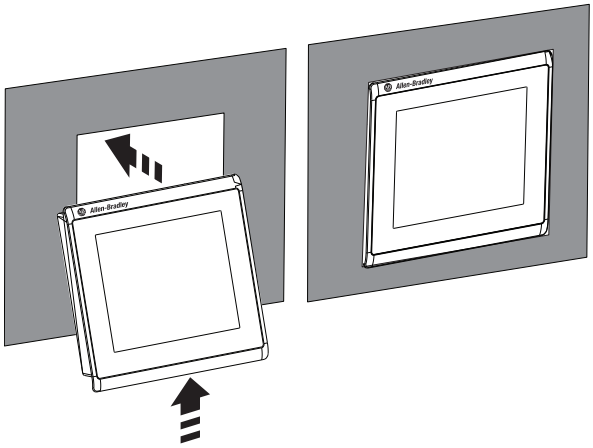

c. Pull the top of the terminal toward you to verify that the levers are still intact and the terminal is stabilized in the panel.

d. Insert the remaining levers in the slots by using the orientations in Figure 5 on page 28 that are correct for your terminal.

The direction that you rotate the levers varies for each terminal size.

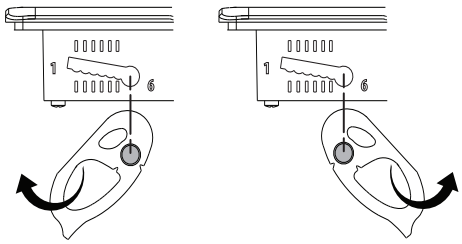

4. Slide and rotate each lever to a notch that is one or two positions greater than the final lock position. Start with the first lever in the sequence.

For example, if the final lock position is 3, slide the lever to notch 4 or 5.

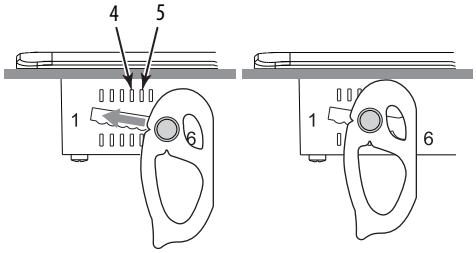

TIP To help position the levers and identify the final slot position, use the alignment marks or previous marks you made on the bezel.

a. See Table 11 on page 26 to get the final lock position of the levers.

b. See Figure 5 on page 28 to get the locking sequence.

c. Rotate each lever until its flat side comes in contact with the panel.

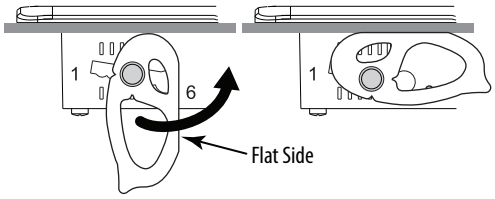

5. Adjust each lever to its final lock position shown in the same locking sequence in Figure 5 on page 28.

a. Unlock lever one in the sequence by rotating it away from the bezel.

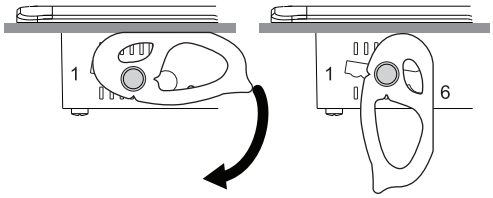

b. With the lever positioned vertically to the slot, slide the lever to the final locking position in Table 11 on page 26.

The outer notch of the lever aligns with the bezel indentation.

c. Carefully rotate the lever back toward panel.

TIP A broken lever does not damage the product.

d. Lock the remaining levers to their final position.

6. Inspect all levers and make sure each is in the correct locked position.

ATTENTION: All levers must be in the correct and same locked position to provide an adequate gasket seal between the terminal and the panel. Rockwell Automation assumes no responsibility for water or chemical damage to the terminal or other equipment within the enclosure because of improper installation.

The notch on the outside of lever shows its locked position.

These two views show levers that are locked in position 4.

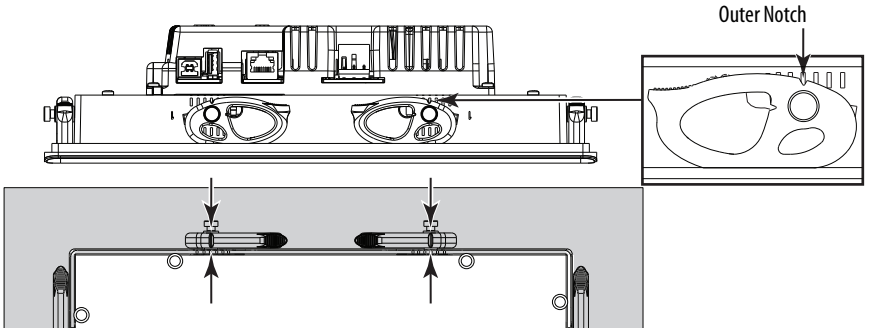

Remove and Replace Power Terminal Block

The product has a three-pin terminal block for DC power connections. You can remove the terminal block for ease of installation, wiring, and maintenance.

SHOCK HAZARD: Turn off the power before you connect or disconnect wiring. If the power is on, an electric arc can occur.

Failure to turn power off can result in electric shock or damage to the terminal.

Use a 0.6 x 3.5 mm screwdriver for terminal block wiring.

Table 12 - Wire Specifications for Power Input Terminal Block

Wire Type	Dual-wire Size(1)	Single-wire Size	Strip Length	Screw Torque
Stranded or solid Cu 90 °C (194 °F)	0.3…1.3 mm^2 22…16 AWG	0.3…2.1 mm^2 (22…14 AWG)	7 mm (0.28 in.)	0.56 N•m (5.0 lb•in)

(1) Two-wire maximum per terminal.

To remove the power terminal block, follow these steps.

1. Insert the tip of a small screwdriver into the terminal block access slot.
2. To release the locking mechanism, gently pry the terminal block away from terminal.

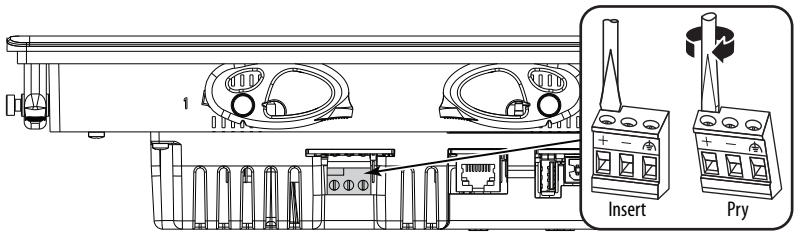

To install the power terminal block, follow these steps.

1. Press the terminal block base in first with the terminal block leaning outward.
2. Gently push the top of the terminal block back to vertical position to snap in the locking tab.

Connect Power

The terminals have a 24V DC non-isolated power supply at these power ratings.

Table 13 - DC Power Ratings

Terminal	Power Supply	Input Voltage	Power Consumption
2713P-T6CD1	Non-isolated	24V DC nom (18…30V DC)	13 W max (0.54 A at 24V DC)
2713P-T7WD1			
2713P-T9WD1			14 W max (0.58 A at 24V DC)
2713P-T10CD1			15 W max (0.62 A at 24V DC)
2713P-T12WD1			16 W max (0.67 A at 24V DC)

ATTENTION: The power supply is internally protected against reverse polarity. Do not connect DC+ or DC- to the earth ground terminal, which can damage the terminal. Do not connect AC power, or more than 30V DC, which can also damage the terminal.

The terminals support operation from a safety extra low voltage (SELV) or protective extra low voltage (PELV) 24V DC power supply. Supported power supplies include catalog numbers 1606-XLP95E, 1606-XLP100E, 1606-XLP120E, and 2711P-RSACDIN.

ATTENTION: Use a SELV or PELV supply as required by local wiring codes for your installation. The SELV and PELV power sources provide protection so that under normal and single fault conditions, the voltage between conductors and earth ground does not exceed a safe value.

To power the terminal from the same power source as other equipment, use a DC power bus.

To connect the operator terminal to a DC power source, follow these steps.

1. Verify that the wiring is not connected to a power source.
2. Strip 7 mm (0.28 in.) of insulation from your power supply wires.

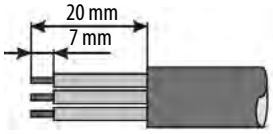

3. Secure the DC power wires to the marked terminals (+ and –) on the terminal block.

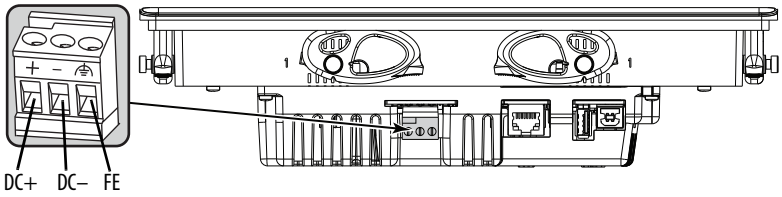

4. Secure the functional earth (FE) ground wire to the GND terminal on the terminal block.

   The GND terminal must be connected to a low-impedance FE ground.

> **ATTENTION:** The FE ground connection to FE ground is mandatory. This connection is required for noise immunity, reliability, and Electromagnetic Compliance (EMC) with the European Union (EU) EMC Directive for CE marking conformance. This connection is required for safety by Underwriters Laboratory (UL).

> **IMPORTANT** Secure the power cable to help prevent these actions:
>
> - Vibration at the connector.
> - Pulling when the panel door is opened and closed, or when personnel are working inside the panel.

5. Apply power to the operator terminal.

Connect to a Network

The Ethernet port connects to controllers on an EtherNet/IP™ network by using standard Ethernet connections. These types of networks are supported:

- Linear Network Topology on page 36
- Star Network Topology on page 36

Ethernet Port

The terminal has one 10/100Base-T, Auto MDI/MDI-X, Ethernet port for controller communication.

The terminal connects to an EtherNet/IP network by using a CAT5, CAT5E, or CAT6 twisted-pair, Ethernet cable with RJ45 connectors.

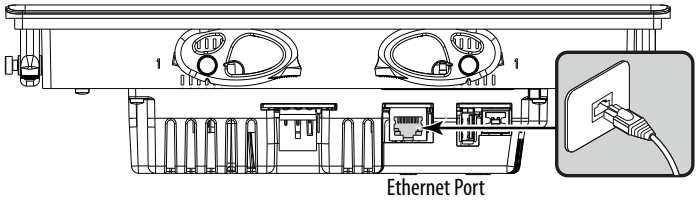

> **IMPORTANT** To help prevent accidental disconnection of the Ethernet cable, follow these steps:
>
> - To minimize vibration at the connector and help reduce the chance that personnel working inside the panel can accidentally disconnect the cable, secure the Ethernet cable.
> - To help prevent pulling on the cable when the panel door is opened and closed, do not install the Ethernet cable too tightly. Leave some slack in the cable.

The maximum cable length between the Ethernet port and a 10/100Base-T port on an Ethernet hub (without repeaters or fiber) is 100 m (328 ft).

SHOCK HAZARD: Do not connect or disconnect any communication cable with power that is applied to this device or any device on the network. If the power is on, an electric arc can occur.

Failure to turn power off can result in electric shock or damage to the terminal.

Table 14 - Ethernet Connector Pinout

Connector	Pin	Pin Name
View of RJ45 Connector 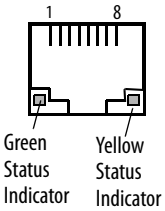 	1	TD+
	2	TD-
	3	RD+
	4	Unused
	5	Unused
	6	RD-
	7	Unused
	8	Unused
	Shield connection	No direct connection (AC coupled to chassis GND)

The Ethernet port has two indicators that provide the status of activity.

Table 15 - Ethernet Status Indicators

Indicator	Color	Description
Link integrity	Green	On when a link is present.
Activity	Yellow	Blinks when activity is detected on the Ethernet link.

Linear Network Topology

A linear network topology is a collection of devices that are daisy-chained together across an EtherNet/IP network. Devices that can connect to a linear network topology use embedded switch technology so you do not need a separate switch, as required in star network topologies.

Figure 6 - PanelView 5310 Terminal at the End of a Linear Network

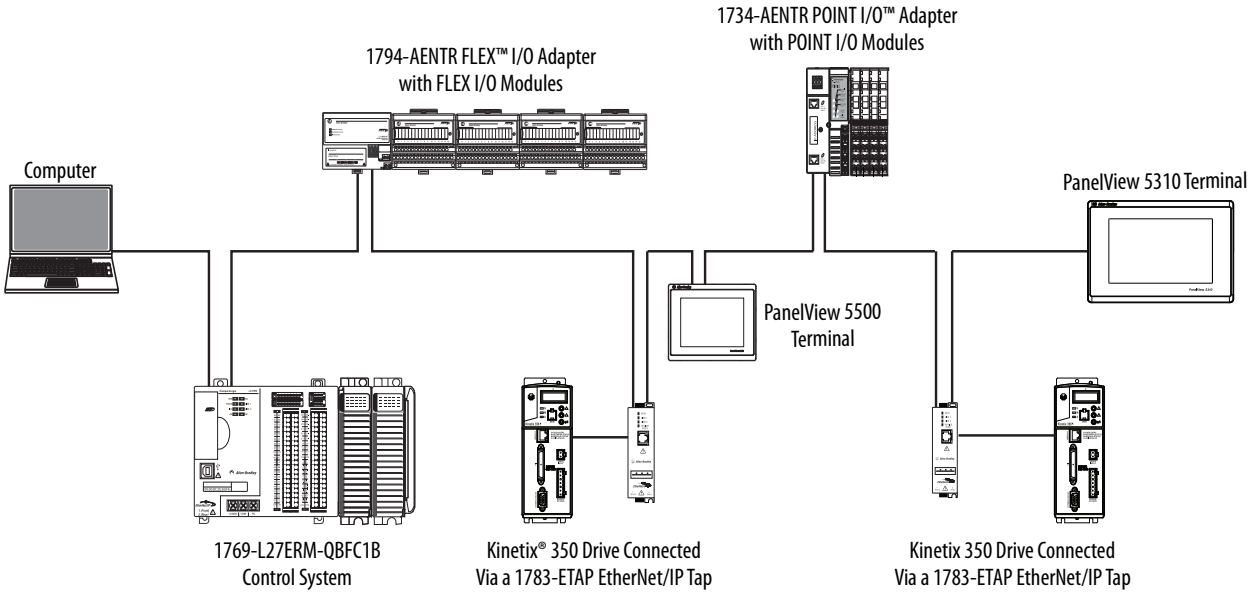

Star Network Topology

A star network topology is a traditional EtherNet/IP network that has multiple devices that are connected to each other via an Ethernet switch.

Figure 7 - PanelView 5310 Terminal Connected Via a Stratix 6000 Switch

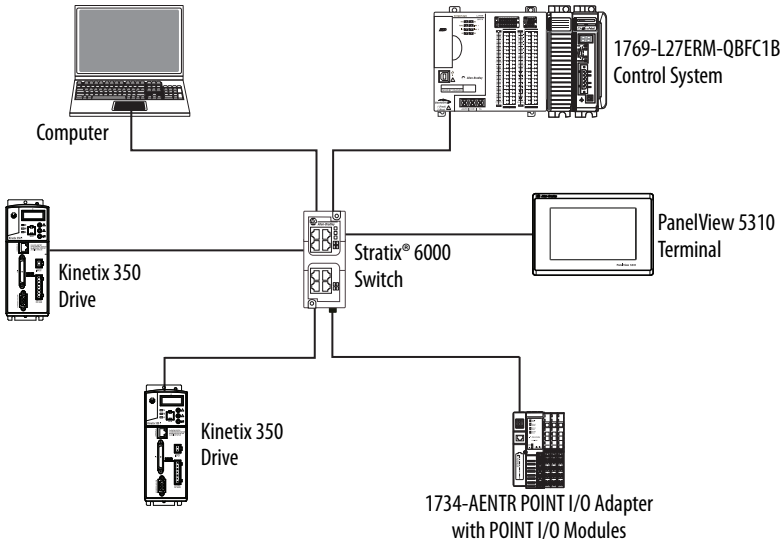

Initial Startup

IMPORTANT You must configure the Ethernet settings and update the firmware before you can download a View Designer project and use the terminal. See Update the Firmware before You Use the Terminal on page 37.

If you attempt to configure the terminal settings without updating the firmware, the Settings menu shows an update firmware message at the bottom of the screen.

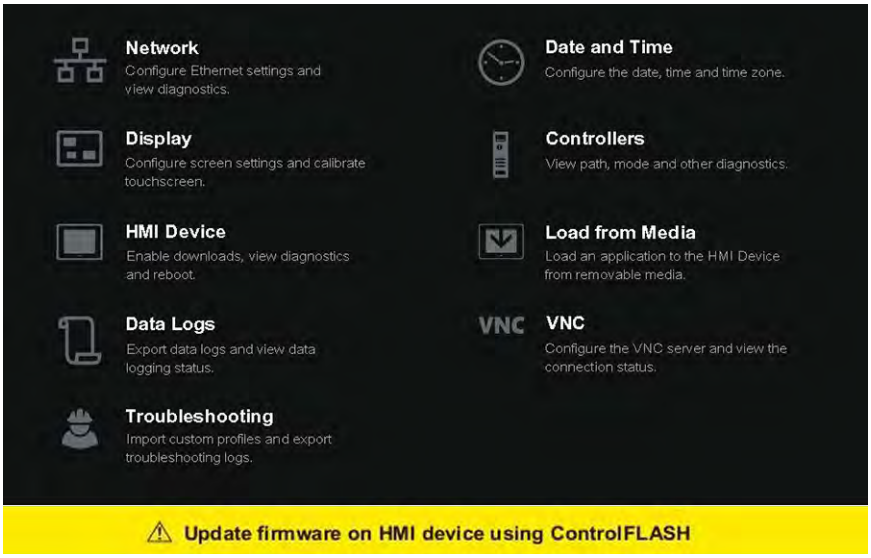

Update the Firmware before You Use the Terminal

When power is turned on, the terminal goes through its startup sequence. The Welcome screen displays with a Configure the Ethernet Network button.

To configure the Ethernet settings and update the firmware, follow these steps.

1. Start up the terminal.

   The Welcome dialog box displays.



2. Tap Configure the Ethernet Network.

   The Internet Protocol (IP) Settings dialog box displays.

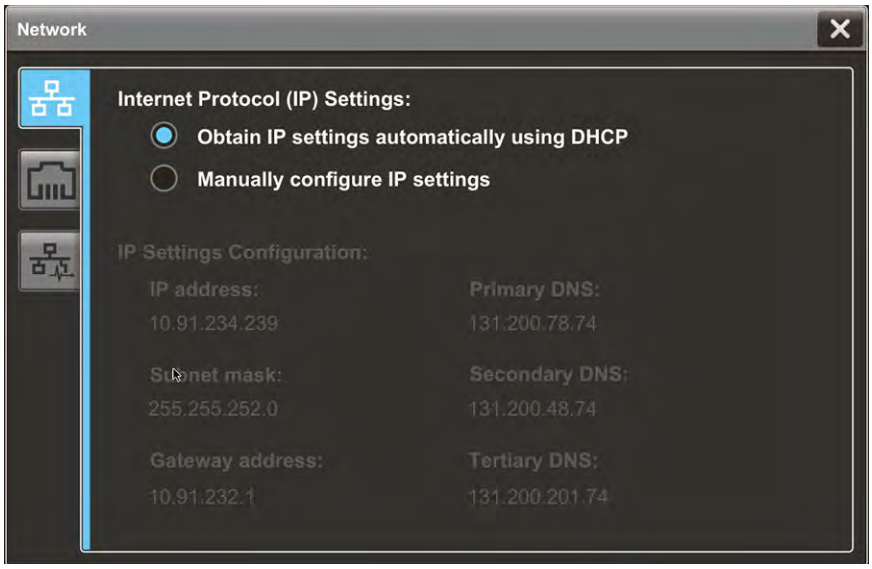

3. Configure the IP settings for the terminal.
   - To obtain an IP address automatically, see Use DHCP to Assign an IP Address for the Terminal on page 47.
   - To configure IP settings manually, see Assign a Static IP Address for the Terminal on page 48.
4. Tap the Ethernet icon.
5. Configure the Ethernet ports for the terminal.

   See Configure the Ethernet Port on page 50.

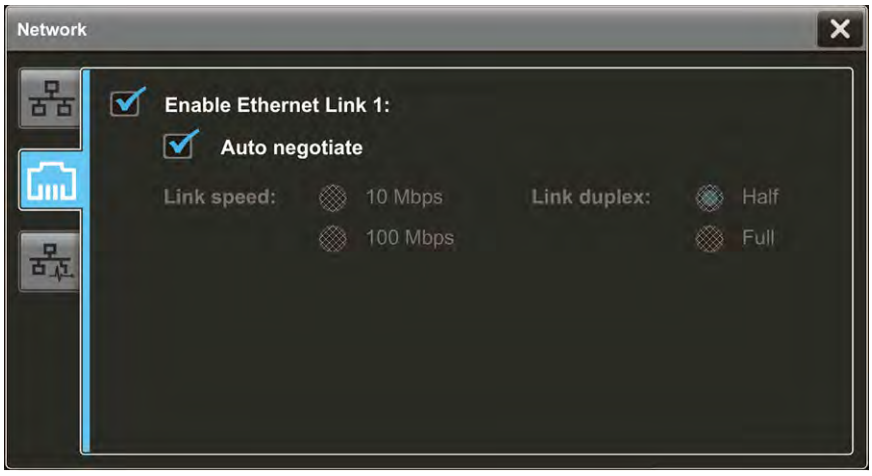

6. Update the firmware by using the ControlFLASH™ software.

   Begin the update at Get the Terminal Firmware on page 87.

You can now download a View Designer application to the terminal. After the application is downloaded, the terminal resets then automatically launches the application.

Configure Terminal Settings

Topic	Page
Runtime Environment	39
Enter Data With Virtual Keyboards	41
Log On to the Terminal	44
Log Off of the Terminal	45
Settings Menu	45
Configure the IP Address of the Terminal	47
Configure a DNS Address for the Terminal	49
Configure the Ethernet Port	50
View the Network Diagnostics	51
Use the Data Export Feature	52
Adjust the Brightness of the Display	53

Topic	Page
Configure the Display Screen Saver	54
Calibrate the Touch Screen	56
Disable Downloads to the Terminal	58
Change the HMI Device Name	59
View the Firmware Revision	60
Display Terminal Diagnostics	61
Enable the VNC Server	62
Load an Application from Removable Media	63
Reboot the Terminal	64
Change the Date and Time	65
View Information for the Configured Controller	66

Runtime Environment

During runtime, the PanelView™ 5310 terminal runs HMI projects. A project is configured and downloaded to your terminal from the View Designer application. The project launches each time that the terminal restarts.

The terminal exchanges data values with the controller, animates the displayed data, and responds when you press keys or touch a screen or element on a screen.

During runtime, you can perform these tasks:

- Navigate screens and their graphic elements
- View and manage alarms
- View and perform operations on a trend chart
- Display error information
- Configure terminal settings and view diagnostic information

Here is an example of a screen in a project that is downloaded to the terminal.



Item	Name	Description
1	Alarm status indicator button	Opens the Alarm Summary screen. A button on the screen turns red and flashes when there are active alarms that are unacknowledged. The button returns to its pictured default state with a gray icon when all alarms return to normal, even if alarms are unacknowledged.
2	Unacked (unacknowledged) number	Displays the number of unacknowledged alarms in the project, regardless of the inhibit state of the alarms.
3	Previous button	Opens the previous screen in the navigation history of the terminal.
4	Next button	Opens the next screen in the navigation history of the terminal. **IMPORTANT:** Using the Next button requires that a previous screen is first displayed.
5	Navigation button	Displays the navigation menu at the bottom of the screen. Use the Navigation menu to display shortcuts and folder contents.
6	Log On	Logs you on and off the project. The name of the logged-on user appears in the system banner. **IMPORTANT:** The logged-on user sees only the screens for which the user has access.
7	General Di agnostics status	Displays data log status and project event errors when the following conditions occur: • The data log is exporting. • The data log is in error while collecting data or exporting. • The media containing the data log is ready to remove without corrupting files or making files read-only on the USB storage device or SD card. • Tags in the data log are in error. You can select the icon to view the error details. A data log status icon only appears when a project contains a data log and there are no project event errors. • Project events and data logs are in error. You can select the icon to open the predefined popup for data log and project event status details. • Project events are in error. You can select the icon to view the error details. The Project Event Error ion only appears when a project event is in error.
8	Network status	Appears only if there is an issue with network communication. Tap the icon to open the Device Configuration Network popup for details about the issue.
9	Controller status	Appears only if there is an issue with the controller. Tap the icon to open the Controllers popup for details about the issue.
10	Time and date	Displays the current time and date.
11	System banner	Appears at the top of each screen in a project.
12	Project screen	Displays screens, shortcuts, and popups of a project that is created in the View Designer application.
13	Navigation menu	Displays menu items that you have access to when you are logged in. To display the navigation menu, press the Navigation button below the screen or in the system banner above the screen. You can tab to menu items to open the screens of the project. Tap a menu item to display that project in the screen. The navigation menu also provides access to the Settings menu for the terminal.

Enter Data With Virtual Keyboards

The virtual keyboard or virtual numeric keypad opens during runtime when text or numeric input is required.

- The virtual keyboard opens on the PanelView 5310 terminal screen when you tap a field or element that requires text or numeric input.
- The virtual numeric keypad opens on the PanelView 5310 terminal screen when you tap a field or element that requires only numeric input.

Figure 8 - Virtual Keyboard



Table 16 - Virtual Keyboard Description

Item	Feature	Description
1	Text entry field	Tap the letters, numbers, and character keys to enter text into this field. The text entry field is always active when the keyboard is open.
2	Clear	Tap this button to remove all characters that are entered in the text entry field.
3	Backspace	Tap this key to delete one character to the left at a time.
4	éüç	Tap this key to toggle between Roman characters and alpha-European characters. Numeric keys are not part of the alpha-European keyboard.
5	Arrow keys	Tap the left arrow key to move the cursor one space to the left. Tap the right arrow key to move the cursor one space to the right.
6	Cancel	Tap Cancel to cancel the entry.
7	OK	Tap OK to complete the entry.
8	Space bar	Tap the space bar to enter a space in the text entry field.
9	#?= ABC	Tap this key to toggle between symbols and alpha-numeric characters: • When in symbol mode, the key displays as ABC. • When in alpha-numeric mode, the key displays as #?=.
10	Shift	Tap this key to toggle the keyboard between uppercase and lowercase letters. The keyboard returns to lowercase characters after one character has been entered.
11	Caps lock	Tap this key to toggle the keyboard between uppercase or lowercase letters. The keyboard remains in the selected state until you tap this key again.

Figure 9 - Virtual Numeric Keypad



Table 17 - Virtual Numeric Keypad Description

Item	Feature	Description
1	Numeric entry field	The numeric entry field into which you type the numeric value for the graphic element.
2	Min-Max value	The displayed minimum and maximum values you can enter for the selected field or element.
3	Clear	Tap the X to remove all numbers that are entered into the numeric entry field.
4	Backspace	Tap the backspace button to delete one number to the left at a time.
5	+ _	Tap the positive-negative value button to toggle between a positive or negative number.
6	Cancel	Tap Cancel to cancel the entry.
7	OK	Tap OK to complete the entry.

Specify Keypad or Keyboard Size

If you prefer to work with a larger-size keypad or keyboard, PanelView provides a larger size option.

To specify the keypad or keyboard size, follow these steps.

1. In View Designer, select Project Properties.
2. In the Project Properties dialog box, select Application in the left panel.

3. In the Keypad and Keyboard Size section, select either Normal or Large.

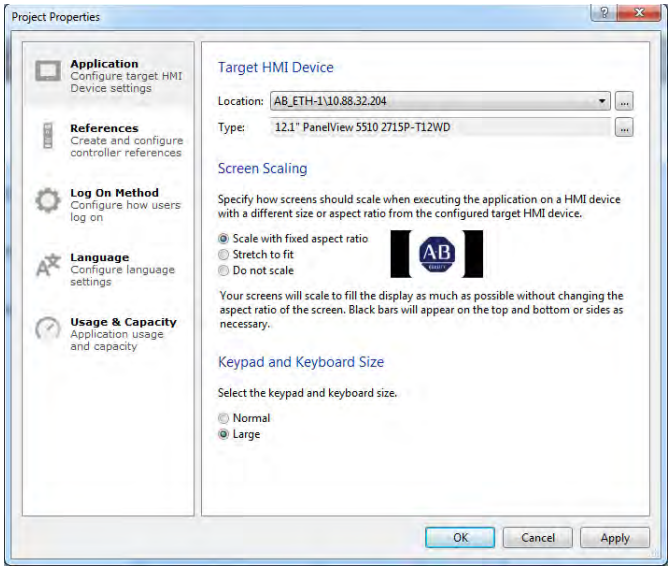

Figure 10 provides a comparison between the Normal and Large size keypad. The larger size of both the keypad and keyboard gives you easier touch operation, which is useful if you use gloves during equipment operation.

Figure 10 - Normal versus Large Keypad



Normal Size Keypad

Large Size Keypad

Log On to the Terminal

When you log on to the terminal, the screens that you have security access to appear as items in the navigation menu. For example, if you have been assigned the administrator role, all screens that have administrator access appear in the navigation menu.

TIP
- The Guest user is logged on automatically at system startup. Anyone that is not logged on to the system can view or access only those screens assigned the level of security that is given to the Guest user account.
- Screen security and user roles are assigned in Studio 5000 View Designer® and cannot be modified on the PanelView 5310 terminal.

To log on to the terminal, follow these steps.

1. In the system banner at the top of the screen, tap 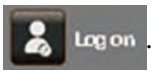

.

   The Log On dialog box opens.



2. Tap the User Name field.

   The virtual keyboard opens.
3. To enter your user name with no spaces, tap the keys.
4. Tap OK.
5. Tap the Password field.

   The virtual keyboard opens.
6. To enter your password with no spaces, tap the keys.

   Passwords are case-sensitive.
7. Tap OK.
8. Tap Log on.

   The Log On dialog box closes and your user name appears on the Log On button on the status banner.

TIP
- You can only be logged on as one user at a time.
- If you are already logged on to the terminal, you can log on as another user. Open the Log On dialog box, enter another user name and password, then tap Log On.

Log Off of the Terminal

When you log off, these actions occur:

- The Guest user is logged in by default.
- If the Guest user has access to the current screen, the terminal continues to display the current screen.
- If the Guest user does not have access to the current screen, the Home screen for the project is displayed.

To log off the terminal, follow these steps.

1. In the status banner at the top of the screen, tap 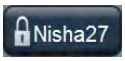

that shows your user name.

   The Log On dialog box opens.

2. Tap Log Off.

   You are logged off the terminal.

Settings Menu

You can access configuration parameters and systemwide information for the terminal from the Navigation menu.

To open the Settings menu, follow these steps.

1. On an application screen, press  .

2. On the Settings screen, tab to the menu item and press Enter.

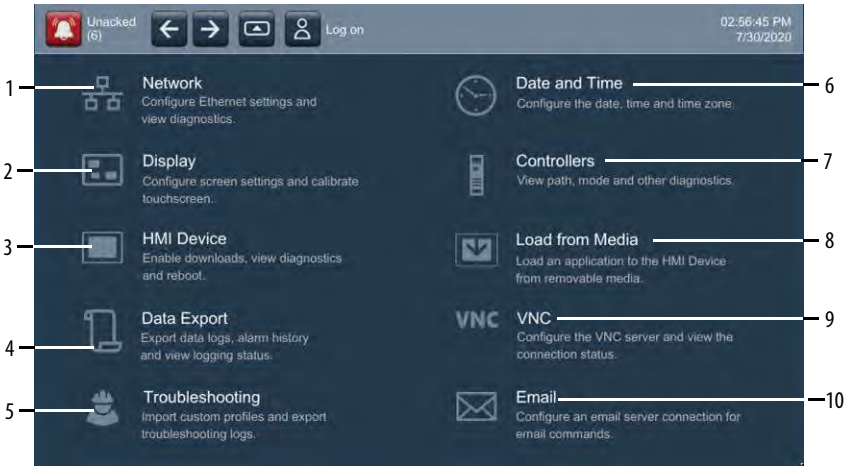

Item	Menu Topic	Tasks That You Can Perform
1	Network	• Configure a static or dynamic device IP address • Configure Ethernet Link 1 settings • View network diagnostics
2	Display	• Adjust the brightness of the display • Enable or disable the screen saver • Configure the screen saver settings • Calibrate the touch screen
3	HMI Device	• Enable or disable downloads and firmware updates • Enter an HMI device name • View the catalog number and current firmware revision • View terminal diagnostic information • Restart the terminal
4	Data Export	• Export data logs • Remove the SD™ or SDHC™ card safely • View data logging status • Export alarm history
5	Troubleshooting	• Select a default or imported profile for troubleshooting • Save the troubleshooting log to a USB drive or SD card for Rockwell Automation technical support
6	Date and Time	• Set the date and time on the terminal • Set the time zone on the terminal
7	Controllers	• View general information for the controller • View diagnostic information for the controller
8	Load from Media	• Load an application to the HMI device from removable media
9	VNC	• Configure the VNC server and view the connection status
10	Email	• Configure the terminal to send and receive email

Configure the IP Address of the Terminal

You can configure the IP address of the terminal to use the Dynamic Host Configuration Protocol (DHCP), or manually configure a static IP address.

A project is downloaded to the terminal from the View Designer software through the IP address of the terminal.

TIP You cannot configure network IP addresses in the View Designer software.

Use DHCP to Assign an IP Address for the Terminal

In a DHCP configuration, the network assigns the IP address, subnet mask, and default gateway address fields.

To configure DHCP for the terminal, follow these steps.

1. On an application screen, press  .
2. On the Settings screen, tap  .
3. Tap the Obtain IP settings automatically using DHCP radio button.

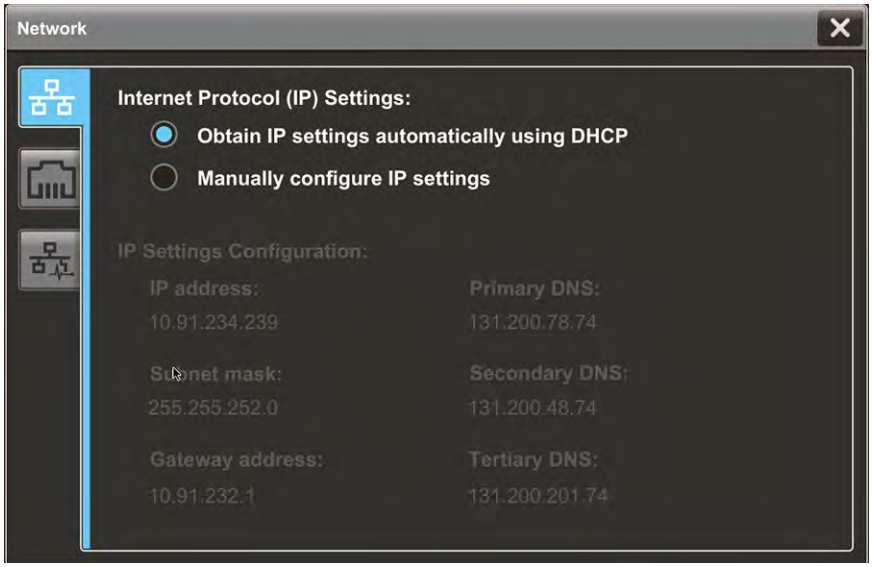

4. To close the window, tap  .

Assign a Static IP Address for the Terminal

To assign a static IP address for the terminal, follow these steps.

1. On an application screen, press .
2. On the Settings screen, tap .
3. Tap the Manually configure IP settings radio button.

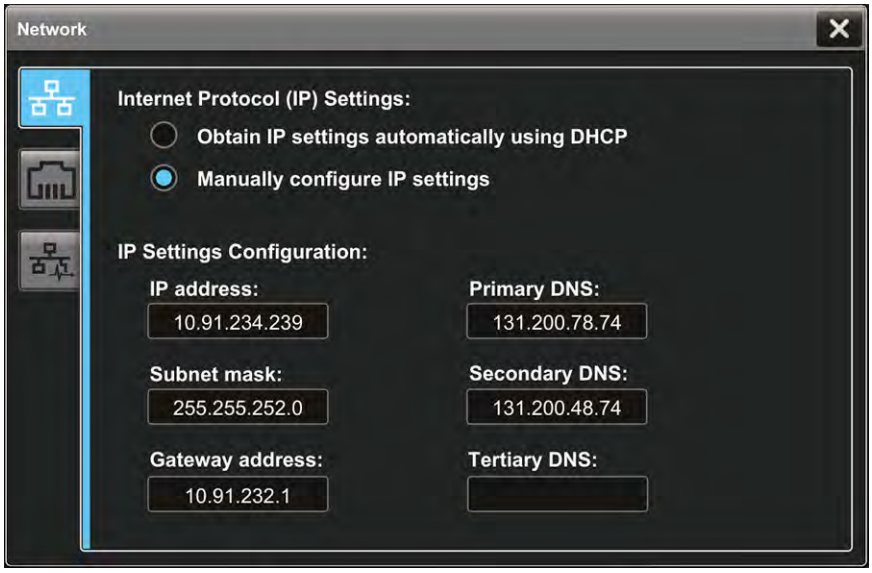

Follow these guidelines to assign the IP Settings Configuration.

Parameter	Description
IP address	The range of values for the first set of numbers is 1…255. The range of values for last three sets of numbers is 0…255
Subnet mask	The subnet mask address must be identical to server subnet mask.
Gateway address	Optional address.

4. Tap the IP address field.

   The virtual keyboard opens.
5. To enter the IP address, use the virtual keyboard.
6. Tap OK to close the virtual keyboard.
7. Repeat steps 4...6 for the subnet mask and the Gateway address fields.
8. To close the window, tap .

Configure a DNS Address for the Terminal

The domain name system (DNS) translates Internet domain and host names to IP addresses. DNS automatically converts a name that is typed in a web browser address bar to the IP addresses of web server that host that site. You can configure DNS addresses for common domain or host names.

TIP You cannot configure DNS addresses within the View Designer software.

To configure a DNS address for the terminal, follow these steps.

1. On an application screen, press  .
2. On the Settings screen, tap  .
3. Tap the Manually configure IP settings radio button.

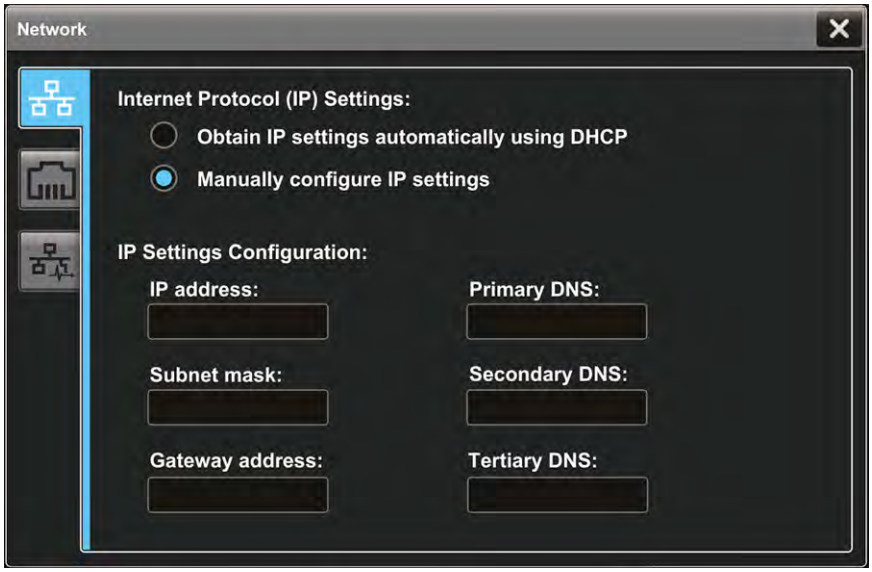

Follow these guidelines to assign the DNS settings.

Parameter	Description
Primary DNS	The range of values for this address is 0…255
Secondary DNS	The range of values for this address is 0…255
Tertiary DNS	The range of values for this address is 0…255

4. Tap the Primary DNS field.

   The virtual keyboard opens.
5. To enter the DNS address, use the virtual keyboard.
6. Tap OK to close the virtual keyboard.
7. Repeat steps 4…6 for the Secondary DNS and the Tertiary DNS fields.
8. To close the window, tap  .

Configure the Ethernet Port

You can configure the link speed and duplex mode for the Ethernet port on the terminal. The port is identified as Ethernet Link 1.

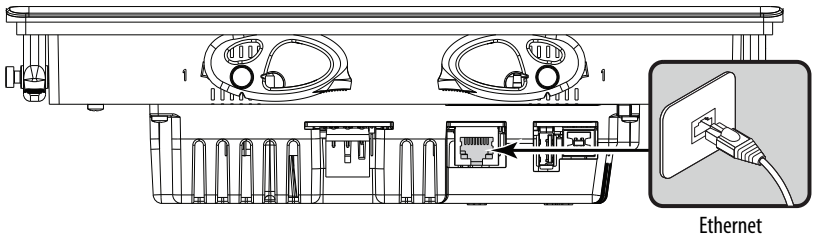

TIP You cannot configure the Ethernet port within the View Designer software.

To view or change the link settings of the Ethernet port, follow these steps.

1. On an application screen, press .
2. On the Settings screen, tap .
3. Tap the Ethernet icon.

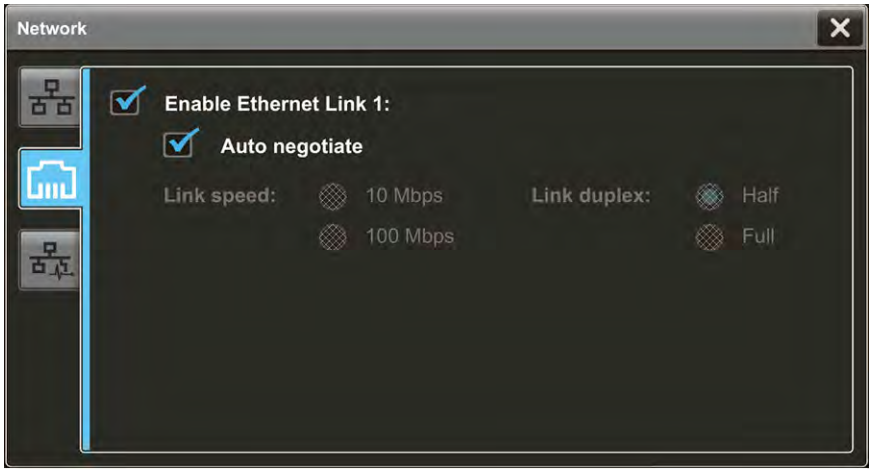

4. Select the Ethernet options for your network configuration:
   - Tap the Enable Ethernet Link 1 checkbox to add or remove the check mark. The option is enabled when the box is checked.
   - To set the speed and duplex options that are based on the network connection, tap the Auto negotiate checkbox. The option is enabled when the box is checked.
   - To set the speed and duplex options, tap the Auto negotiate checkbox to remove the check mark from the box. Then tap the speed and duplex options for your network.
5. To close the window, tap .

View the Network Diagnostics

From the Network Diagnostics screen, you can view Ethernet Link 1 network connection data, network status data, and IP settings configuration data.

To view the Network Diagnostics screen, follow these steps.

1. On an application screen, press  .
2. On the Settings screen, tap  .
3. Tap the network diagnostic icon.

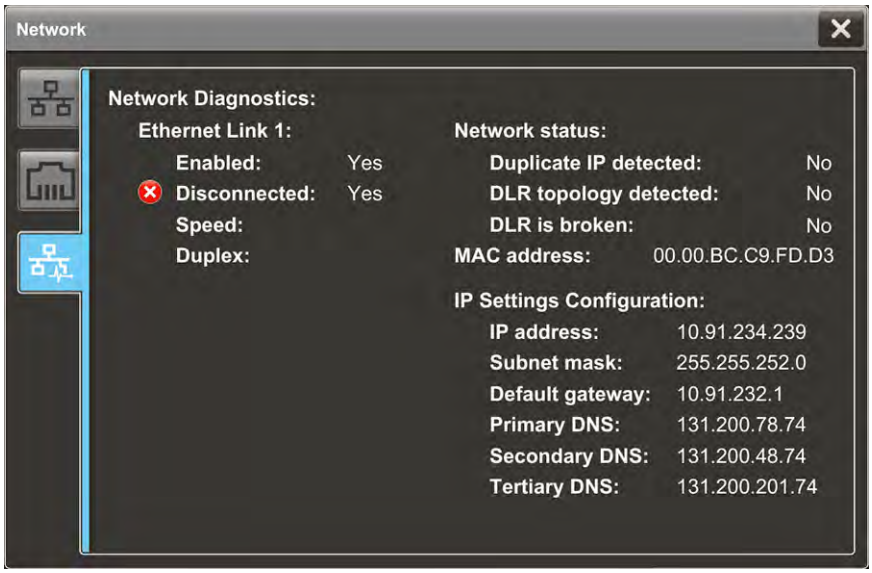

4. To close the window, tap  .

Use the Data Export Feature

You can export a configured data log or alarm history from the terminal to removable media to view tag values collected on the terminal. The exported ZIP file contains individual CSV files for each data log in the project. You can then open the exported data log file on a personal computer to view the values in the data log.

To export a data log or alarm history to removable media, follow these steps.

IMPORTANT Before you can export a data log, verify that a FAT32-formatted USB device or SD card is inserted in the terminal.

1. On an application screen, press  .
2. On the Settings screen, tap  .



3. In the Export to file box, type a name for the export file.

   Datalog is the default name.
4. Under Destination, select the media type.
5. Tap Export.

   A progress bar appears to show export progress, and a data log popup displays the date and time of the last exported data log.
6. If an SD card is used, verify the following before you remove the media:
   a. After the data export completes and the progress bar disappears, tap 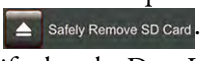

   .
   b. Verify that the Data Logger status changes from Running to Remove SD card.
   c. You can safely remove the SD card.
7. To close the window, tap  .

Adjust the Brightness of the Display

You can adjust the brightness level of the terminal display in increments from 1...100%.

- 1% is the minimum display visibility.
- 100% is the maximum display visibility.

TIP Lower the brightness level to reduce the power that the backlight consumes, and extend the life of the backlight.

These tags can also be set to control backlight brightness level:

::Local:HMIDevice.Display.BacklightIntensity

::Local:HMIDevice.Display.ScreenSaverIntensity

To adjust the brightness of the display, follow these steps.

1. On an application screen, press  .
2. On the Settings screen, tap  .
3. Tap the Brightness field.

   The virtual numeric keypad opens.

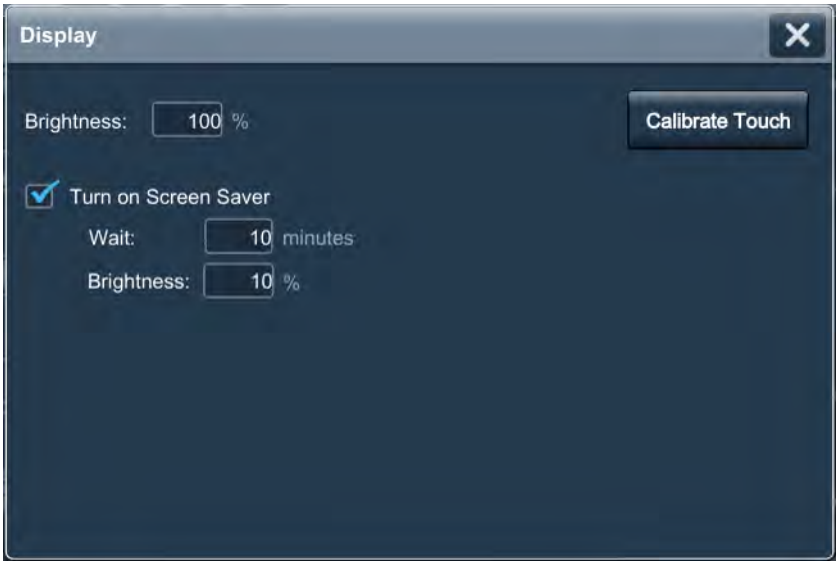

4. Enter the value for the brightness in increments from 1...100%.
5. Tap OK.
6. To close the window, tap  .

Modify Screen Color Settings By Using HMI Device Tags

If you need to adjust the color of the PanelView 5000 LCD display, there are three HMI device tags available under the Display category:

- BlueAdjustment
- GreenAdjustment
- RedAdjustment

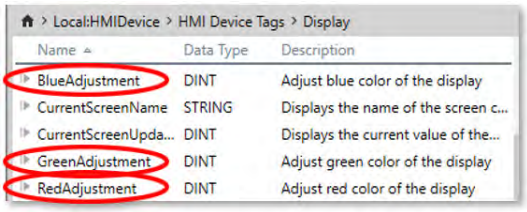

To use these tags, bind them to Numeric Input elements you put on your custom screen. The default value for each color is 50. To make the color more or less pronounced, enter higher or lower values using your Numeric Inputs.

Configure the Display Screen Saver

The screen saver extends the life of the back light by dimming the brightness level when activity is not sensed for a specified amount of time. When the screen saver is activated, the terminal displays a moving image at a reduced brightness level. When user input is sensed, the screen saver is deactivated and the display brightness returns to its configured level.

TIP After the screen saver is deactivated, touch or keypad input is ignored for at least 0.5 seconds.

To configure the brightness and screen saver for the display, follow these steps.

1. On an application screen, press  .
2. On the Settings screen, tap  .

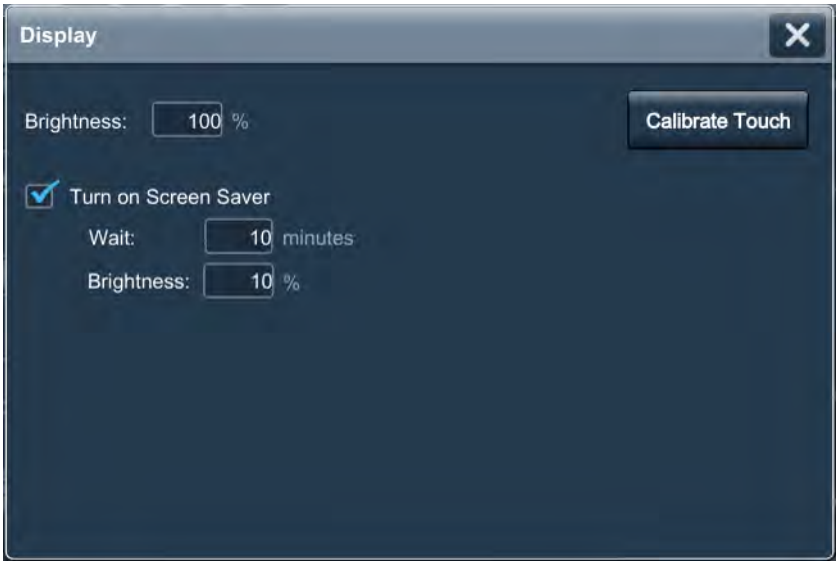

3. To add or remove the check mark next to Turn on Screen Saver, tap the checkbox.

   The option is enabled when the box is checked.

4. Tap the Wait field.

   The virtual numeric keyboard opens.

5. Enter the number of continuous, idle minutes from 1...5999 to wait before activating the screen saver.

   The default is 10 minutes.

6. Tap OK.

7. Tap the Brightness (%) field.

   The virtual numeric keyboard opens.

8. Enter the value for the brightness in increments from 1...100%.

9. Tap OK.

10. To close the window, tap  .

Calibrate the Touch Screen

The touch screen is calibrated at the factory. After installation, you can recalibrate the touch screen to compensate for parallax if the screen is viewed at an angle.

The calibration process requires you to touch a series of targets on the screen.

IMPORTANT For accuracy and to help prevent damage to the touch screen, use a plastic stylus device with a minimum tip radius of 1.3 mm (0.051 in.).

To calibrate the touch screen, follow these steps.

1. On an application screen, press  .
2. On the Settings screen, tap  .

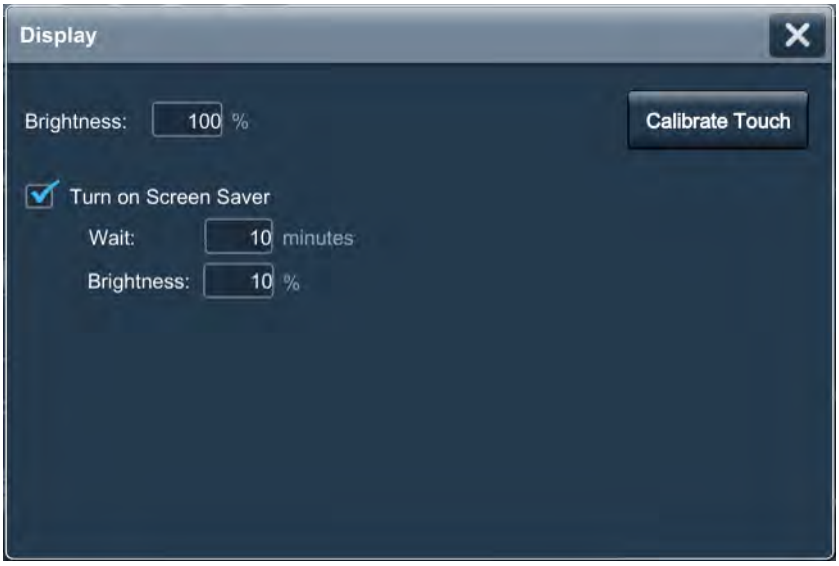

3. Tap **Calibrate Touch**.

   A red target appears on the screen.

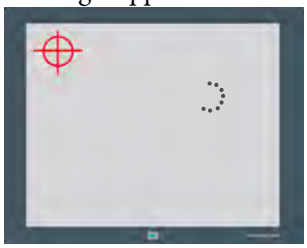


4. Press and hold the center of the target until the target completes the circle.

   The next target appears.

   TIP Touch inside the target areas before the progress indicator completes a circle.

5. Continue to press and hold the centers of all remaining targets as they appear.

   All processed targets are replaced with white targets.

A green circle with a check indicates a successful calibration.



A red circle with an X indicates a failed calibration.

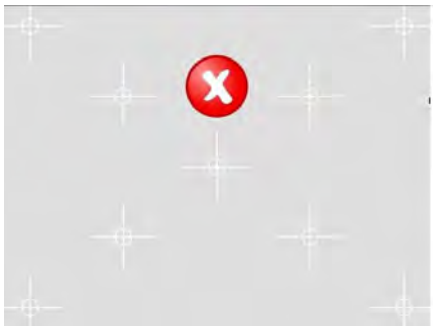

If the calibration fails, the process automatically repeats. Continue the calibration until the calibration is successful.

TIP The calibration is retained after a reset or power cycle.

6. Tap OK.
7. To close the window, tap .

Disable Downloads to the Terminal

As a security measure, you can disable downloads to the terminal, including application downloads and firmware updates. Disable downloads to help prevent the current application from being replaced when an application is downloaded from the View Designer application.

To disable downloads to the terminal, follow these steps.

1. On an application screen, press  .
2. On the Settings screen, tap  .

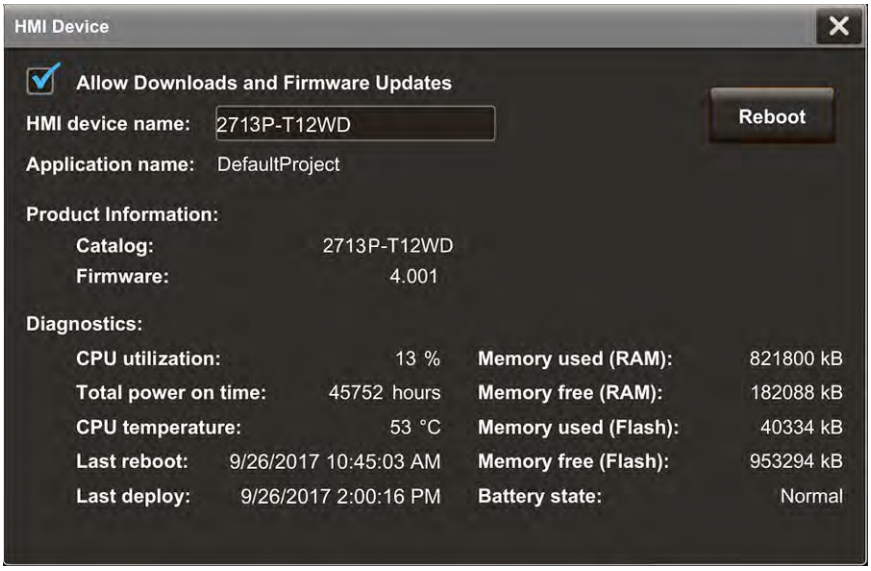

3. Tap the Allow Downloads and Firmware Updates checkbox to clear the checkbox.
   - Downloads are not permitted when the checkbox is cleared.
   - Downloads are permitted when the checkbox is checked.
4. To close the window, tap  .

While this setting is unchecked, you cannot download another application to the terminal or update the terminal firmware.

Attempts to download an application from the View Designer application results in an error.

Change the HMI Device Name

Each terminal has a unique default HMI device name that identifies it to other devices on the network. You can view or change this name.

To view or change the HMI device name, follow these steps.

1. On an application screen, press .
2. On the Settings screen, tap .

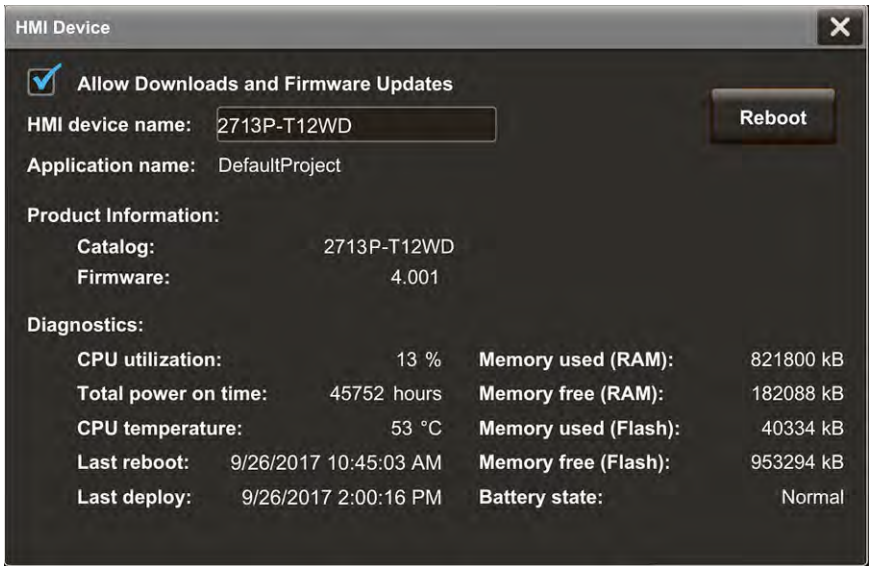

   The HMI device name field shows the current name.

3. Tap the HMI device name field.

   The virtual keyboard opens.

4. To enter or modify the current name, tap the virtual keyboard keys.

   TIP
   - You can enter up to 15 characters including letters, numbers, and hyphens.
   - The first character of the terminal name must be an upper or lowercase letter.

5. Tap OK.
6. To close the window, tap .

View the Firmware Revision

You can view the current firmware revision on the terminal. You need this information for firmware updates, or when you call technical support.

To view the firmware revision, follow these steps.

1. On an application screen, press  .
2. On the Settings screen, tap  .

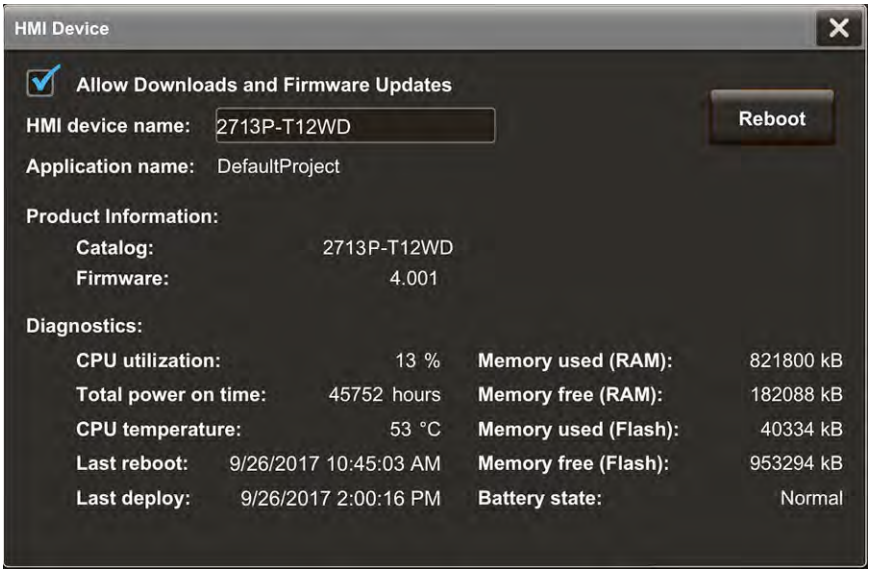

   View the firmware revision under Product Information.

3. To close the window, tap  .

Display Terminal Diagnostics

To view the diagnostic data for the terminal, follow these steps.

1. On an application screen, press .
2. On the Settings screen, tap .

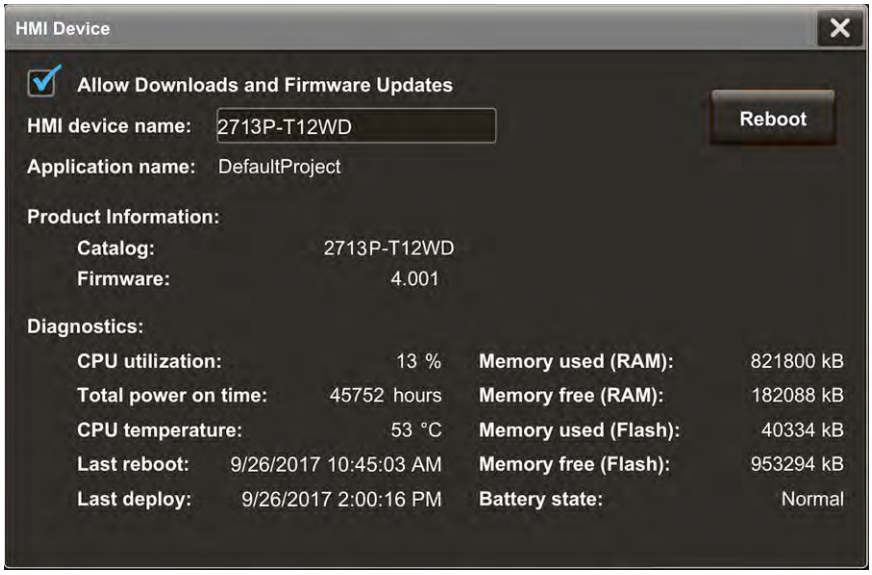

3. View the information under Diagnostics.

Diagnostic Parameter	Description
CPU utilization	The processor usage.
Total power on time	The total time the terminal has been running (powered).
CPU temperature	Displays the current temperature of the CPU: • Normal: 25…94 °C (77…201 °F) • High: 100 °C (212 °F) and higher An over-temperature condition of 105…110 °C (221…230 °F) causes a delayed automatic system restart. The restarts continue indefinitely until the system is cool enough to resume normal operation.
Last reboot	Displays the date and time for the most recent restart of the terminal.
Last deploy	Displays the date and time of the most recent project application download.
Memory used (RAM)	The total RAM memory that is in use.
Memory free (RAM)	The total RAM memory that is remaining.
Memory used (Flash)	The total nonvolatile memory that is in use.
Memory free (Flash)	The total nonvolatile memory that is remaining.
Battery state	• Normal • Low • Depleted

4. To close the window, tap .

Enable the VNC Server

You can enable VNC to connect remotely to a PanelView 5310 terminal. Use the Remote Connectivity screen to enable or disable the VNC server.

To enable or disable a VNC connection, follow these steps.

1. On an application screen, press .
2. On the Settings screen, tap **VNC**.

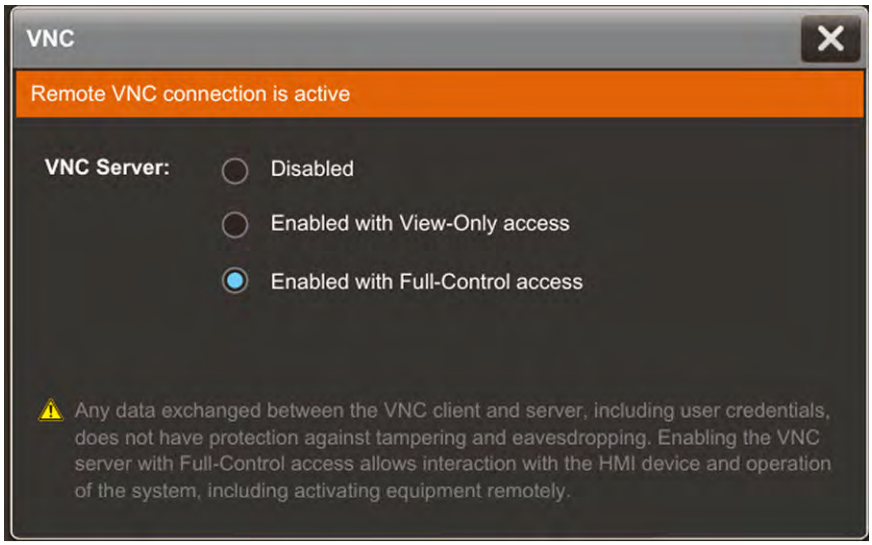

3. Select an access:
   - **Disabled:** Disables the VNC server
   - **Enabled with view-only access:** You can only view content on the HMI device
   - **Enabled with full-control access:** You can view content and interact with the HMI device

     TIP A warning displays with full-control access that the full-control connection is unprotected.

4. To close the window, tap .

Load an Application from Removable Media

You can load a runtime application from removable media to the HMI device. For PanelView terminals with firmware version 6.0 or higher, if you load a runtime application and it requires a different firmware version than the version on the PanelView terminal, the Load from Media procedure updates the firmware.

To load a runtime application from removable media, follow these steps.

1. Insert a USB storage device or SD card with the runtime application into the HMI device.

   IMPORTANT Verify the following before you insert removable media into the terminal:
   - The format is FAT32 for the USB device or the SD card
   - The media has write permissions and sufficient space

2. On an application screen, press  .
3. On the Settings screen, tap  .

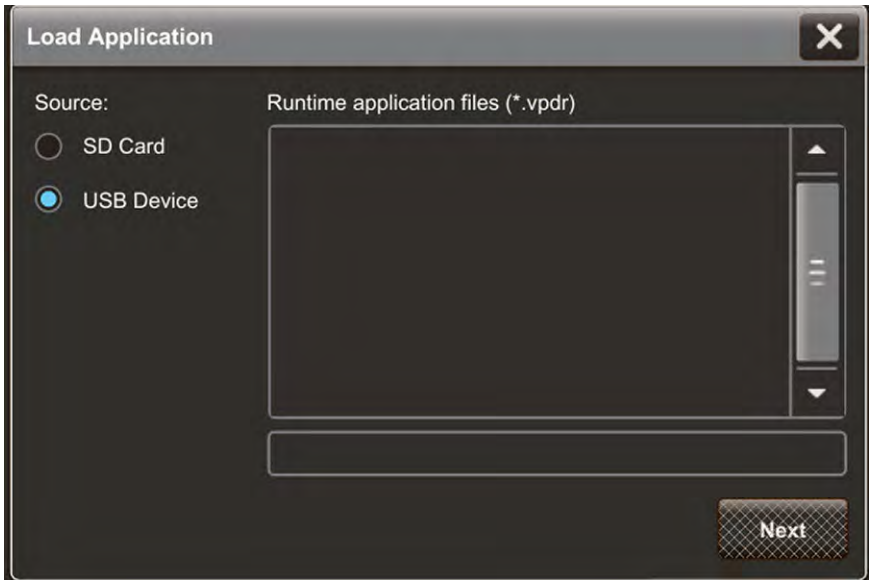

4. Select the appropriate source.
5. From the Runtime application files panel, select the runtime application to load.
6. The application appears in the box underneath the Runtime application files panel.
7. Tap  .
8. Under HMI to controller path, specify the path to use to load the runtime application:
   - **Keep path currently in use on HMI device:** Use the controller path currently used on the HMI device; the current HMI to controller path appears
   - **Load path defined in the runtime application file:** Use the controller path configured in the runtime application on the removable media

Note: To allow Load from Media to install a new revision of firmware on the PanelView 5000, copy the firmware .dmk file to the root directory of the SD card or USB drive. The firmware major revision must match the major revision of View Designer used to create the .vpdr project. Firmware .dmk files are usually a part of the Studio 5000 install located at: C:\Users\Public\Documents\Rockwell Automation\Firmware Kits.

9. Tap Load.

   The HMI device performs a firmware update if needed and then loads and runs the runtime application.
   The Home screen of the runtime application opens on the HMI device.

10. To close the window without performing the load from media, tap ✕.

Reboot the Terminal

To restart the terminal, follow these steps.

1. On an application screen, press .
2. On the Settings screen, tap .

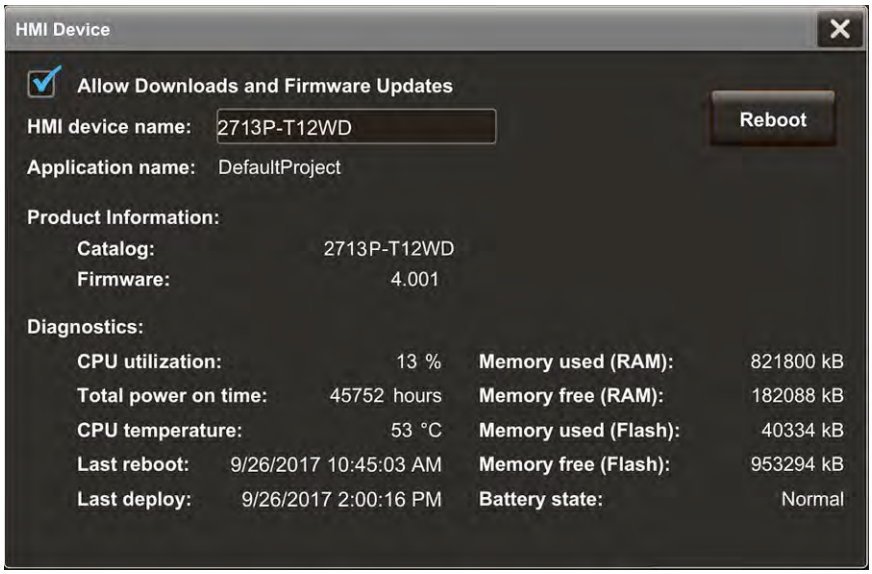

3. Tap Reboot.

   You are prompted to confirm the reboot.

4. To reboot the terminal, tap Yes.

   If you tap Yes to reboot the terminal, it restarts and displays the project that is downloaded to the terminal.

   To cancel, tap No, and then tap ✕ to close the window.

Change the Date and Time

You can change the date and time that is used for terminal operations. The date and time is displayed on the terminal screen and recorded in log files. You can also change the time zone for the terminal.

To change the date and time that is used for terminal operations, follow these steps.

1. On an application screen, press  .
2. On the Settings screen, tap  .

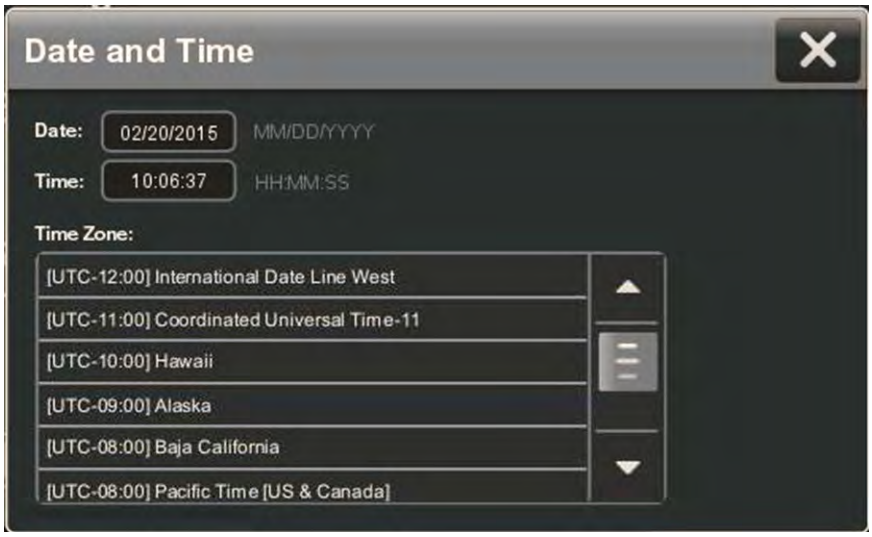

3. Change the Date and Time fields as appropriate.
   a. Tap a Date or Time field.
      The virtual keyboard opens.
   b. Enter a value and tap OK.

Date and Time Parameters		Valid Values
Date MM/DD/YYYY Enter the date format including the '/' characters.	Year	Up to 2999
	Month	1…12
	Day	0…31
Time HH:MM:SS (24-hour format) Enter the time format including the ':' characters.	Hour	0…23
	Minute	0…60
	Second	0…60

4. Change the time zone, if desired.
   a. To move up and down the list, press and drag the scroll bar (or press and hold an arrow button).
      Or tab to the list and use the arrows keys on the physical keypad of the terminal.
   b. Tap the time zone for the terminal.
      The time on the terminal is adjusted to match the selected time zone.
5. To close the window, tap  .

View Information for the Configured Controller

You can view general information for the controller that is configured to operate with the terminal.

To view the general information for the controller, follow these steps.

1. On an application screen, press  .
2. On the Settings screen, tap Controllers.



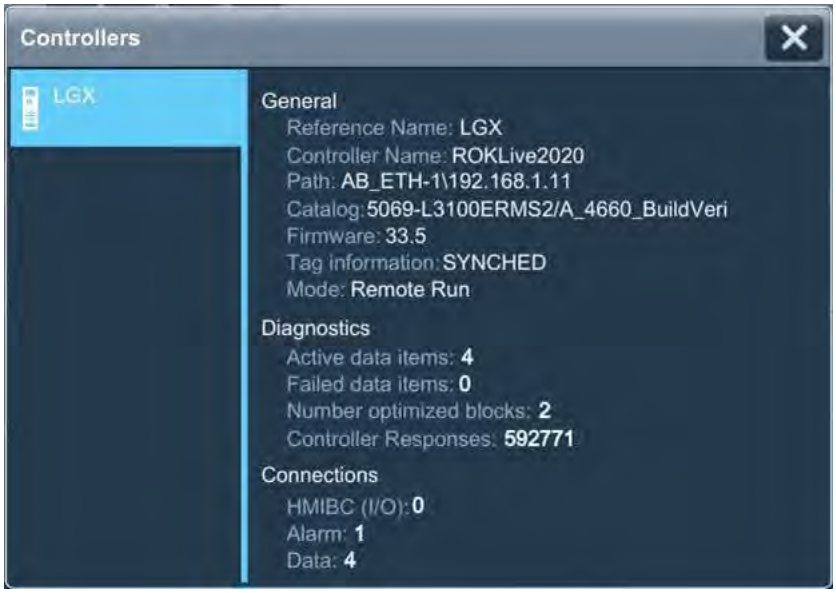

The general information for the controller includes the following data.

Data Type	Description
Reference Name	The name of the controller reference that is configured in the View Designer application. The name does not appear if a controller is not configured for the project.
Controller Name	The name of the controller that is configured in the Logix Designer application. The name does not appear if a controller is not configured for the project.
Path	The communication path for the controller. The path does not appear if a controller is not configured for the project.
Catalog	The Catalog number of the controller. The catalog number does not appear if the controller is disconnected from the network.
Firmware	The major and minor revision numbers for the firmware in the controller. The firmware revision numbers do not appear if the controller is disconnected from the network.
Tag information	The synchronization state to process changes from the controller. For example, the state can be Synchronized, Updating, or Detecting changes. Some tag information cannot appear if the controller tag information is not synchronized (UNINITIATED).
Mode	The operating mode of the controller. For example, the mode can be Run, Program, or Fault. The mode does not appear if the controller is disconnected from the network.

The diagnostic information for the controller includes the following data.

Data Type	Description
Active data items	The number of data items on scan for the controller.
Failed data items	The number of failed data items on scan for the controller.
Number optimized blocks	The numeric of optimized data blocks on scan for the controller.
Controller Responses	The number of responses received from the controller.

The connection information for the controller includes the following data.

Data Type	Description
HMIBC (I/O)	The number of Class 1 Common Industrial Protocol (CIP) connections to the controller.
Alarm	The number of alarm CIP connections to the controller.
Data	The number of Class 3 CIP connections to the controller.

3. To close the window, tap  .

Notes:

Monitor and Manage Control System Alarms

Topic	Page
Alarm Indicator	69
Alarm Help Menu	70
View the Alarm Summary	72
Manage the Alarms	73
Alarm Detail Pane Descriptions	74
Filter the Alarms	76

Alarm Indicator

The Unacked icon in the system banner displays the number of unacknowledged alarms for the system.

To open the alarm summary and view process and machine alarms, tap  .



Alarm Help Menu

To view a brief description of the alarm function keys and status counts, follow these steps.

1. Open the Alarm Summary (page 72) or Alarm Manager (page 73) screen.
2. Tap ?.

   The Help window displays a brief description of the alarm function keys and status counts.

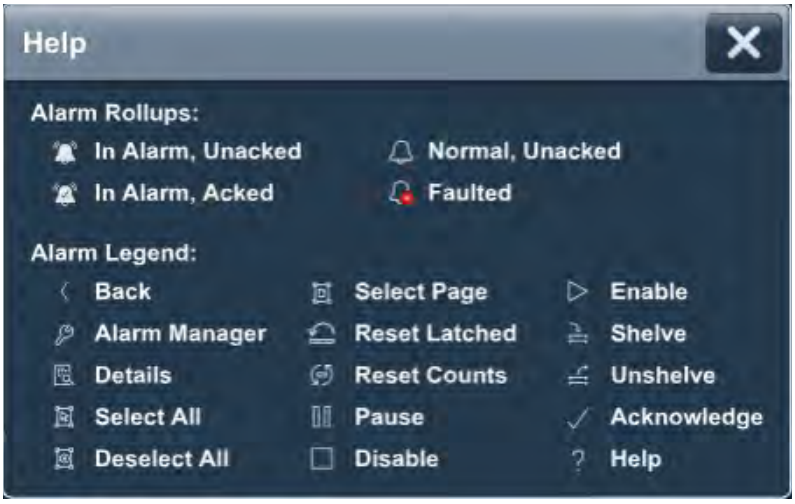

3. To close the window, tap ✕.

See Table 18 for a detailed description of the alarm function keys and alarm status counts.

Table 18 - Alarm Function Key Descriptions

Symbol	Function Key or Message	Description
✓	Acknowledge	Indicates that you are aware of the alarm. This button changes the state of the alarm from unacknowledged to acknowledged.
	Alarm Manager	Opens the alarm manager screen. The alarm manager lists all alarms that are configured in the system and their current states. Therefore, the alarm manager shows alarms that are not shown in the alarm summary, and provides additional tasks for alarms.
〈	Back	Opens the previously displayed screen. When you open the alarm manager screen from the alarm summary screen, this button reopens the alarm summary screen.
	Deselect All	Deselects all alarms in the alarm table, including the alarms that are not displayed on the current page of alarms.
	Details	Hides or shows the details pane, which contains the details of the last selected alarm. The details pane appears on the bottom half of large alarm tables and replaces the list of alarms in medium alarm tables. If no alarm is selected, the details pane is empty.
□	Disable	Stops the alarm condition from being evaluated. In effect, turns off the selected alarm. You can only disable an entire alarm. You cannot disable an individual alarm condition.

Table 18 - Alarm Function Key Descriptions (Continued)

Symbol	Function Key or Message	Description
	Enable	Enables the selected alarms in the alarm manager table, which allows the alarm condition to be evaluated, which turns on the alarm. An enabled alarm enables all conditions for that alarm. You cannot enable an individual alarm condition.
	Faulted	Provides a count of the alarms in a faulted state.
	Help	Provides a description of the help buttons and alarm status.
	In Alarm, Acked	Provides a count of the alarms in an acknowledged state.
	In Alarm, Unacked	Provides a count of the alarms in an unacknowledged state.
	Normal, Unacked	Provides a count of the alarms where the input of the alarm has returned to normal, but the alarm has not yet been acknowledged.
	Pause	Stops updates to the alarm summary table for 10 seconds, or until another operation is performed on the table. While updates to the alarm summary table are paused, alarms in the controller are still evaluated. When the table is no longer paused, any changes to alarm states are reflected in the table and updates resume.
	Reset Counts	Resets the alarm count in the controller and the alarm count value in the details pane of the alarm manager table to zero. The reset is performed for all conditions of the currently selected alarm.
	Reset Latched	Sets the selected digital latched state of the alarm to normal if the input of the alarm has returned to normal. A reset of a digital latched alarm acknowledges the alarm, if it is not acknowledged.
	Select All	Selects all alarms in the alarm table, including the alarms that are not displayed on the current page of alarms.
	Select Page	Selects all alarms that are displayed on the current page of alarms.
	Shelve	Helps prevent the notification of new state changes to the selected alarm if the alarm is acknowledged. Updates to the alarm do not appear. The alarm remains shelved until the shelve duration from the controller expires automatically or you unshelve the alarm manually. Updates to the alarm then resume. When you shelve an alarm in the alarm summary table, you shelve only the selected alarm conditions. When you shelve an alarm in the alarm manager table, you shelve all conditions of the alarm. From the condition list in the details pane of the alarm manager table, you can also shelve individual alarm conditions.
	Unshelve	Unshelves the selected alarm in the alarm manager table, which allows notification of new state changes to alarms. From the condition list in the details pane of the alarm manager table, unshelve individual alarm conditions.

View the Alarm Summary

The alarm summary lists alarms that are in alarm or out of alarm but still unacknowledged. It displays one alarm condition per row. Use the alarm summary to monitor and interact with alarms.

To view the alarm summary for the control system, follow these steps.

1. On an application screen, press  .

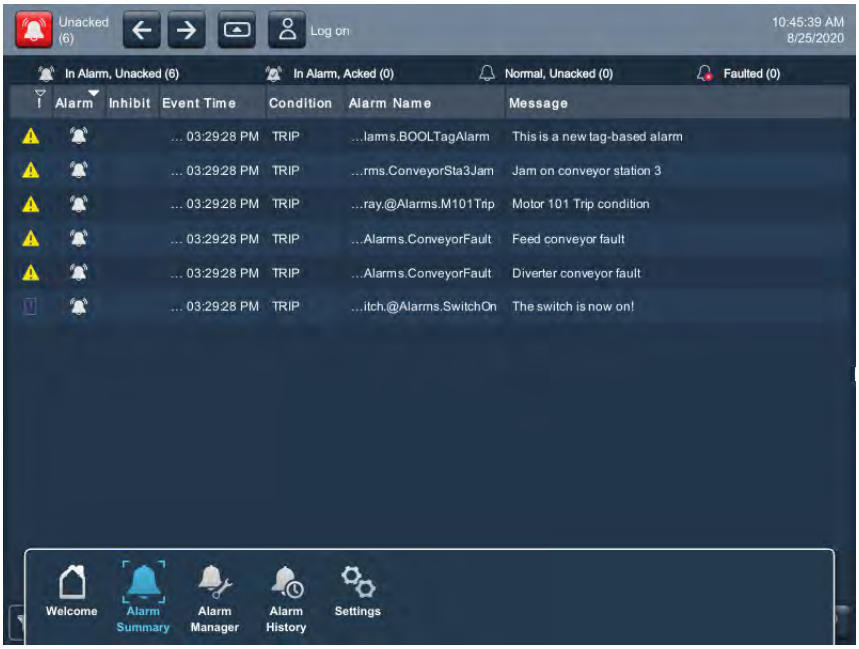

2. Tap  , or tab to the menu item and press Enter.

3. To interact with the alarms, tap the alarm function keys.

   See Alarm Help Menu on page 70 for a description of the keys.

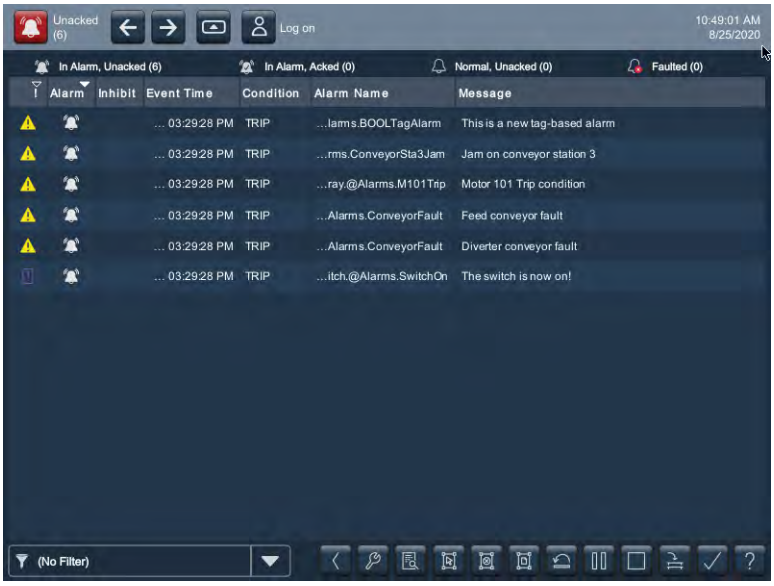

4. To return to the navigation menu, tap the navigation button on an application screen.

5. To return to the application screens, tap an application icon.

Manage the Alarms

The Alarm Manager lists all alarms that are configured in a system and their current states.

To manage the alarms for the control system, follow these steps.

1. On an application screen, press  .

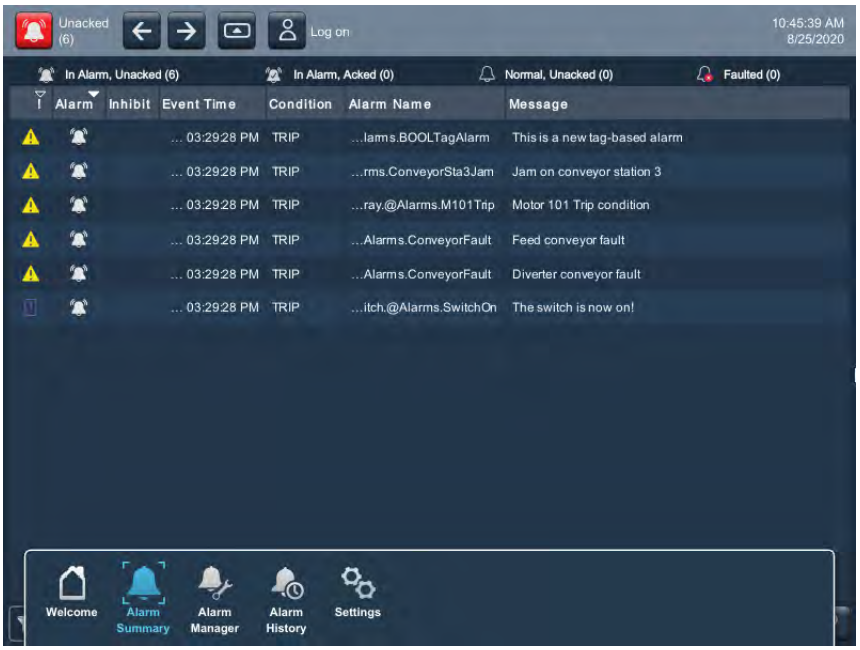

2. Tap 

, or tab to the menu item and press Enter.

3. To manage the alarms, tap the alarm function keys.

   See Alarm Help Menu on page 70 for a description of the keys.

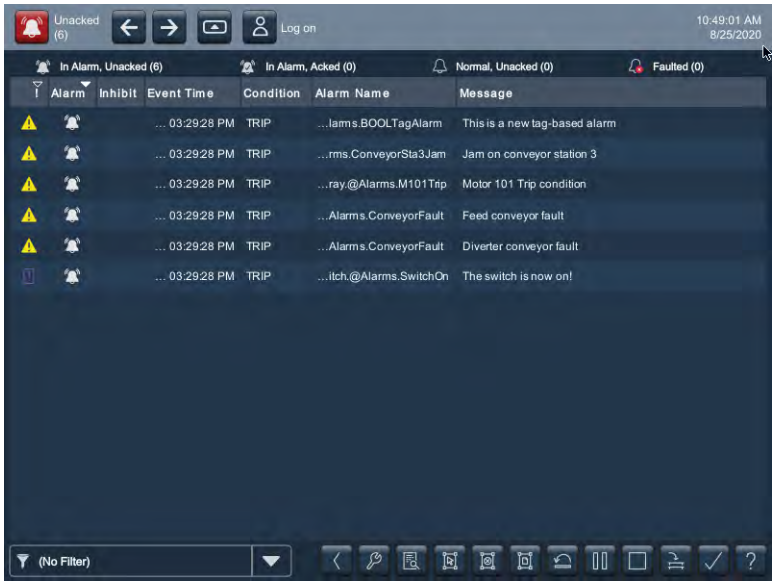

4. To return to the navigation menu, tap  on an application screen.
5. To return to the application screens, tap an application icon.

Alarm Detail Pane Descriptions

The details pane shows details for the selected alarm condition of a selected alarm. Condition details display the selected alarm condition in the alarm manager table.

To view the details pane for a selected alarm, follow these steps.

1. Open the Alarm Summary (page 72) or Alarm Manager (page 73) screen.
2. Tap  .

The details pane displays a list of alarm states and conditions.

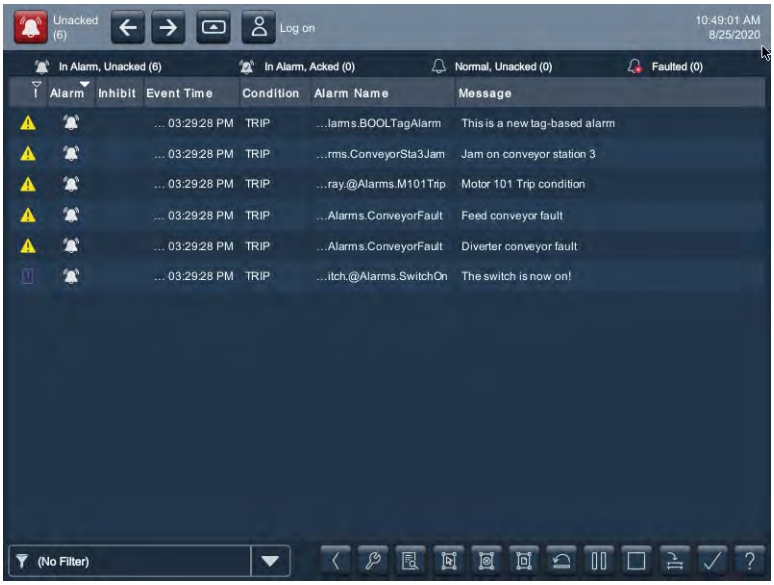

Tap  again to toggle off the details pane.

See Table 19 for a description of the alarm details.

Table 19 - Alarm Detail Descriptions

Alarm Detail	Description
Acknowledge Time	The time the selected alarm was acknowledged.
Alarm Class	The user-defined class that is assigned to the alarm in the Studio 5000 Logix Designer project.
Alarm Count	The number of times the alarm condition has entered the In Alarm state.
Alarm State	The state of the alarm condition: • Normal Unacknowledged (Normal, Unacked) • In Alarm Acknowledged (In Alarm, Acked) • In Alarm Unacknowledged (In Alarm, Unacked) • Normal Acknowledged (Acknowledge)
Condition	• Analog conditions include: HIHI, HI, LO, LOLO, ROC_POS, and ROC_NEG • Discrete conditions include: TRIP and TRIP_L
Current Value	The current tag input value that results in the alarm state.
Disable Time	The time the selected alarm was disabled.
Enable Time	The time the selected alarm was enabled.

Table 19 - Alarm Detail Descriptions (Continued)

Alarm Detail	Description
Event Category	• Digital events are categorized as discrete. • Analog events are categorized as level.
Event Time	The date and time the alarm event occurred.
In Alarm Time	The time the selected alarm entered the In Alarm state.
Inhibit State	The value that is applied to the alarm condition that inhibits the alarm at some level. These states, indicated by an icon in the alarm table, include: • Bad Quality • Disabled • Suppressed • Shelved These states can be combined. When an alarm has multiple inhibit states that are applied, the icon of the highest inhibit state appears in the table.
Limit Value Exceeded	The condition limit that is assigned to the alarm in the Studio 5000 Logix Designer application project.
Max Shelve Duration	The maximum time the alarm can be shelved.
Message	The message that is assigned to the alarm in the Studio 5000 Logix Designer application project.
Name	The name of the alarm. This name includes the controller name of the alarm and the tag name. It can also include the name of the program if the tag is defined at the program level. Therefore, the alarm name can be configured in these configurations: ::ControllerName.TagName Or ::ControllerName\ProgramName.TagName
Out of Alarm Time	The time the selected alarm entered the Normal or Inactive state.
Priority	The urgency of the alarm condition: • Low • Medium • High • Urgent
Quality	The list of reasons why the alarm is of bad quality. This field is blank in the alarm summary because the alarm summary does not show bad quality alarms.
Severity	The numeric value that is mapped to the assigned priority of the alarm condition: • 1…250 (low) • 251…500 (medium) • 501…750 (high) • 751…1000 (urgent)
Shelve Duration	The default time for which the selected alarm condition is shelved to help prevent the notification of new state changes. Shelve duration is assigned to the alarm in the Studio 5000 Logix Designer project.
Shelve Time	The time the selected alarm was shelved.
Suppress Time	The time the selected alarm was suppressed.
Tag 1 Value	The value of the associated tag parameter 1.
Tag 2 Value	The value of the associated tag parameter 2.
Tag 3 Value	The value of the associated tag parameter 3.
Tag 4 Value	The value of the associated tag parameter 4.
Unshelve Time	The time the selected alarm was unshelved. If the alarm is shelved, this time is the time that the alarm is unshelved automatically when the shelve duration expires.
Unsuppress Time	The time the selected alarm was unsuppressed.

Filter the Alarms

You can filter the alarms to view only the alarms in the selected alarm state.

TIP Filters are defined for the alarm summary, alarm manager, and alarm history viewer in View Designer.

To filter the alarms, follow these steps.

1. To the right of the filter field, tap .

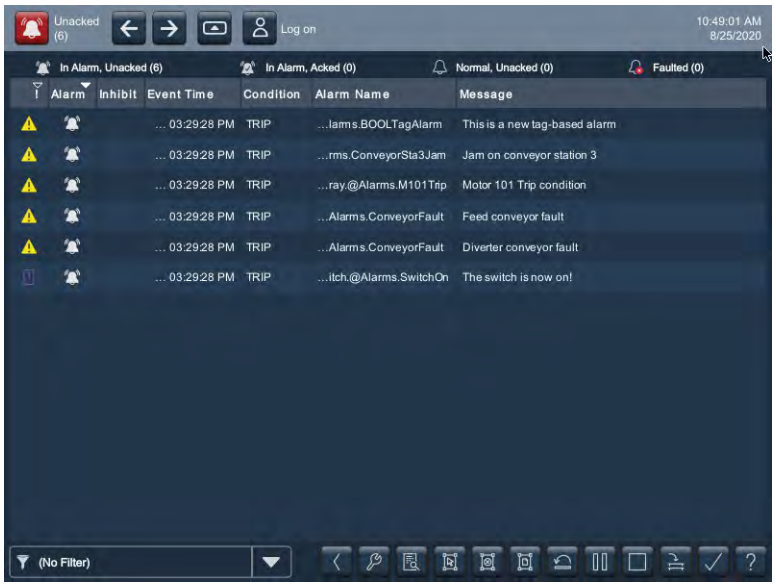

2. To scroll through the filter choices, tap the up or down arrows on the scroll bar.

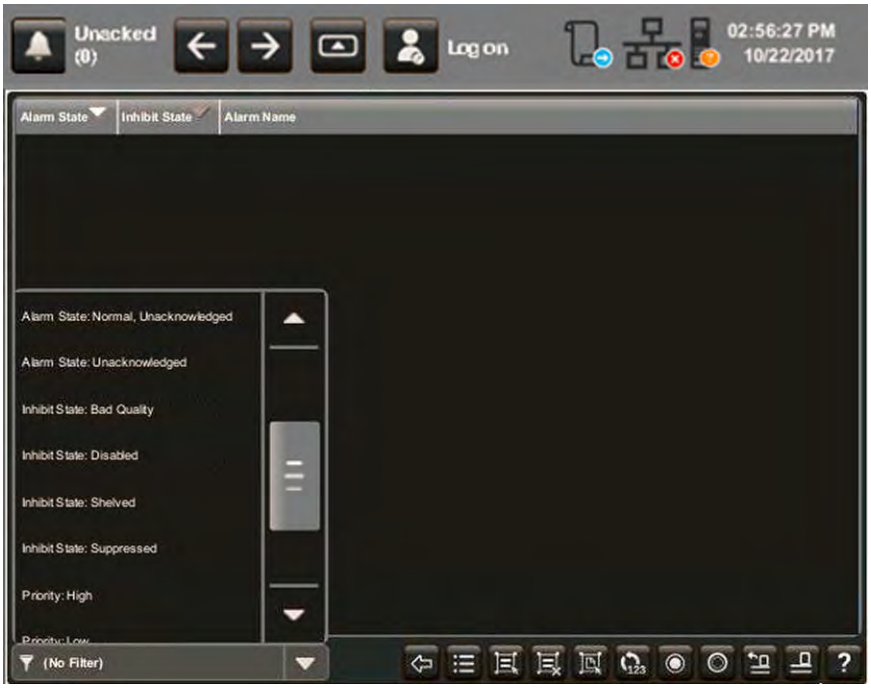

3. Tap the alarm filter that you want to use.

The selected filter displays in the filter pull-down menu.

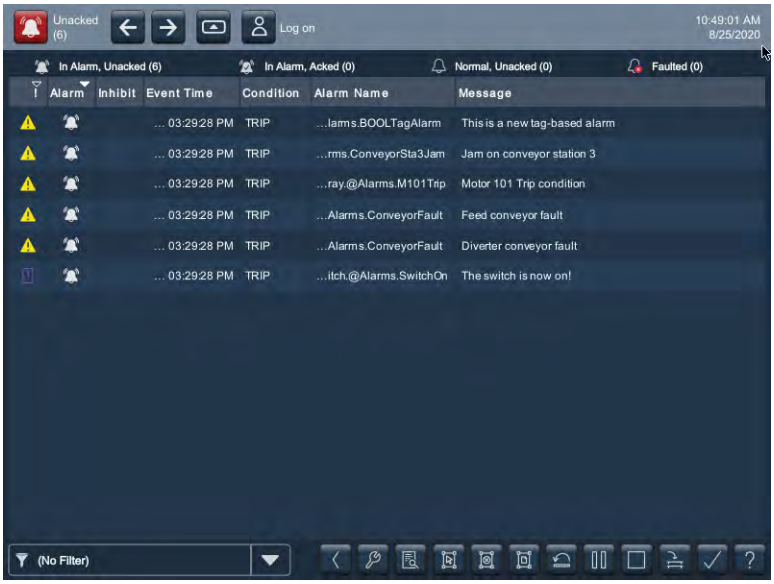

To change the filter, tap the filter pull-down menu and select another filter.

To turn off the filter, tap (No Filter).

View the Alarm History

The PanelView 5310 terminal stores up to 40,000 alarms. The Alarm History Viewer lets you view the alarm history at runtime. You can sort columns, filter by alarm attributes and by time, and view a details pane to see more information about a selected alarm record. The viewer supports both tag-based and instruction-based Logix alarms.

To view the alarm history, follow these steps:

1. On an application screen, press  .
2. Tap 

, and press Enter.

   The Alarm History Viewer displays the alarm history.

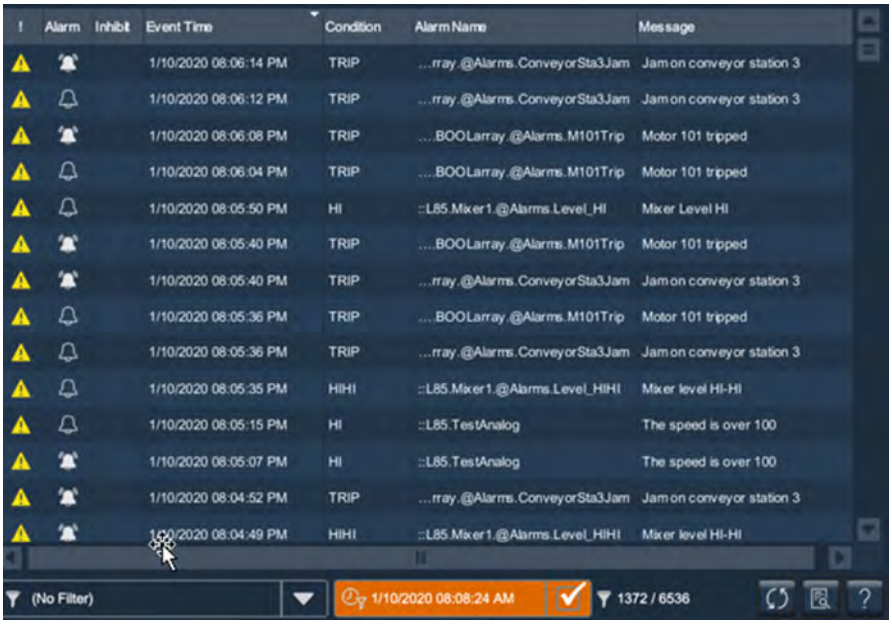

3. To change the way information is presented, you can sort columns by clicking on the column header or select filters by following the instructions in Filter the Alarms on page 76.

Export the Alarm History

You can export the alarm history to an SD card or USB drive. The alarm history is exported as a zipped .CSV file that can be opened and analyzed in Excel.

To export the alarm history, follow these steps:

1. Insert a USB device or an SD card into the PanelView terminal.
2. Navigate to the Settings screen.
3. Click Data Export.
4. In the Data Export dialog box, do the following:
   a. Select Alarm history.
   b. In the File name field, type a name for the file to be exported.

c. Select either USB Device or SD Card.

d. Click Export.

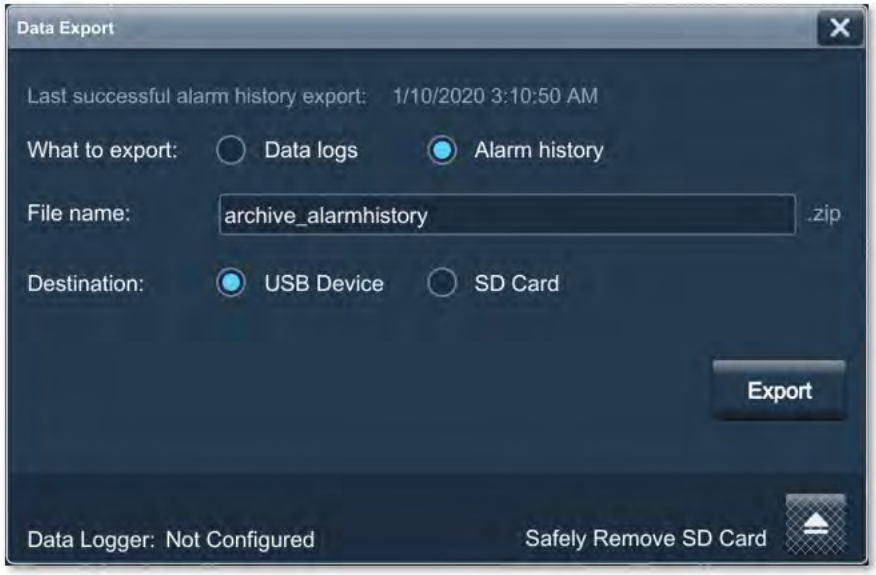

The alarm history is saved as a .zip file containing a .csv file. The .csv file can be opened in Excel for further analysis.

Notes:

Install and Replace Components

Topic	Page
Accessories and Replacement Parts	81
Voltage Precautions	81
Electrostatic Discharge Precautions	82
Connect to USB Ports	82
Insert an SD Card	83
Replace the Battery	84

Accessories and Replacement Parts

You can view a list of accessories and replacement parts in Table 3 through Table 7 in Chapter 1.

Review the specifications of a new component before you install it to verify that it is compatible with the terminal. Record the model, serial number, and any other pertinent information of new components for future reference.

IMPORTANT We recommend that you use only Allen-Bradley® approved accessories and replacement parts.

Voltage Precautions

The terminals contain line voltages. Disconnect all power to the terminal before you install or remove components.



SHOCK HAZARD: Disconnect all power to the terminal before you remove components.

Failure to disconnect power can result in severe electrical shock to an individual or damage to the terminal.

Electrostatic Discharge Precautions

ATTENTION: Electrostatic discharge (ESD) can damage static-sensitive devices or microcircuitry.

- Disconnect all power before you work on the terminal as detailed in Voltage Precautions on page 81.
- Observe proper packaging and grounding techniques to help prevent damage.

Follow these ESD precautions when you handle this terminal:

- Touch a grounded object to discharge potential static.
- Use an anti-static wriststrap connected to the work surface.
- Use properly grounded tools and equipment.
- Avoid touching pins, leads, or circuitry.
- Always hold components with a printed circuit board (PCB) by its edges and place it with the assembly side down.

Connect to USB Ports

Each terminal has one USB 2.0 (type A) host connection and one USB 2.0 (type B) device connection.

IMPORTANT The USB host connection is intended for temporary use with USB drives during deployment (user application file transfers) or maintenance (file transfers and troubleshooting profiles). It can be used with an external hub, keyboard, and mouse during runtime operations but it is not recommended for data logging or user application runtime files.

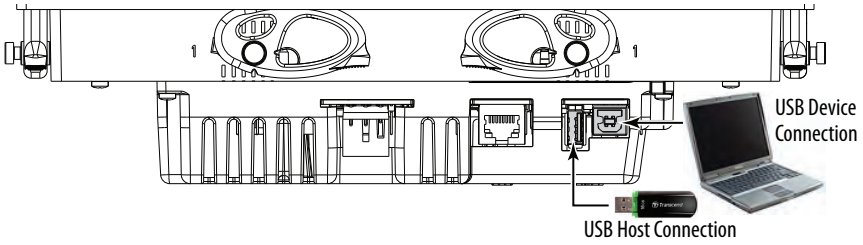

Icons identify the USB host connections. The USB host connection supports 0.5 A at 5V DC. Connected USB devices must not exceed this power load.

Table 20 - USB Connector Pinout

USB Port	USB Icon	USB Connector	Pin	Signal	Description
Host			1	VCC	+5V
			2	D-	Data -
Device			3	D+	Data +
			4	GND	Ground

ATTENTION: USB devices that are not powered by the USB port must adhere to the following:

- The USB device must be within the same enclosure as the terminal.
- The USB device must be connected to a ground system common with the terminal or used with a USB hub that provides galvanic isolation.
- The USB device port is not for runtime operation.

Connect only externally powered USB hubs to the terminal that are USB 2.0 compatible. Before you attach devices to a USB hub, make sure that the power adapter is connected and powered on.

USB Cables

Use high-speed, USB 2.0 certified cables for error-free transmissions.

IMPORTANT	The terminals have not been tested with USB 3.0 cables. We recommend only the use of USB 2.0 certified cables.

Insert an SD Card

Only use a SD™ or SDHC™ card to load troubleshooting profiles and to save troubleshooting logs. For a list of cards recommended by Rockwell Automation, see Table 5 on page 17. The SD cards are hot-swappable; they can be inserted and removed while the terminal is powered on and in operation.

The SD card slot is accessible from the inside or back of the panel when the operator terminal is installed.

Follow these steps to install an SD card in the card slot.

1. Verify that the SD card is locked or unlocked according to your preference.
   - If unlocked, the terminal can write data to or read data from the card.
   - If locked, the terminal can only read data from the card.

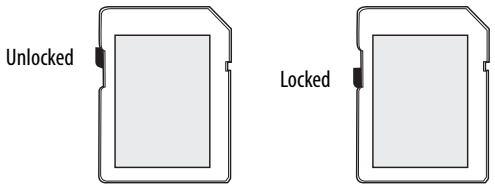

ATTENTION: Orient the SD card correctly before inserting into slot. If you force the card into the slot, you can damage the card or the terminal.

2. Insert the SD card firmly into the slot.

   The SD card snaps into the retention feature.

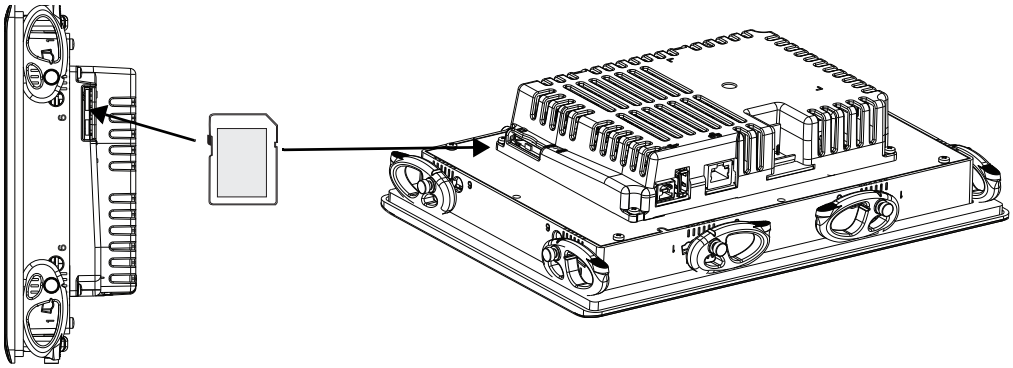

To remove the card, press the card so the retention feature releases the card, and pull out the card.

Replace the Battery

The product has a lithium battery that provides backup power for the real-time clock and static RAM. The battery can be replaced while the product is mounted in the panel. No special tools are required to replace the battery.



This product contains a sealed lithium battery, which may need to be replaced during the life of the product.

At the end of its life, the battery contained in this product should be collected separately from any unsorted municipal waste.

The collection and recycling of batteries helps protect the environment and contributes to the conservation of natural resources as valuable materials are recovered.



WARNING: There is a danger of explosion if the lithium battery or real-time clock module in this product is incorrectly replaced. Do not replace the battery or real-time clock module unless power has been removed.

Replace the battery only with catalog number 2711P-RY2032 or an equivalent CR2032 coin-cell battery.

Do not dispose of the lithium battery or real-time clock module in a fire or incinerator. Dispose of used batteries in accordance with local regulations.

For safety information on the handling of lithium batteries, including handling and disposal of leaking batteries, see Guidelines for Handling Lithium Batteries, publication AG 5-4.

Perchlorate material – special handling may apply. See www.dtsc.ca.gov/hazardouswaste/perchlorate.

This perchlorate warning only applies to primary Lithium Manganese Dioxide ($LiMnO_2$) cells or batteries, and products containing these cells or batteries, sold or distributed in California, USA.

To replace the battery, follow these steps.

1. Disconnect power from the terminal.
2. Remove the screws from the logic module.

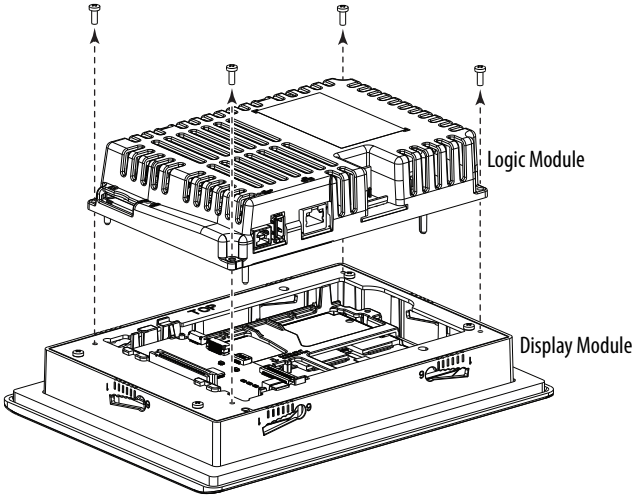

3. Carefully lift the logic module away from the display module and turn over to expose the circuit board.
4. Locate the coin-cell battery on the circuit board.

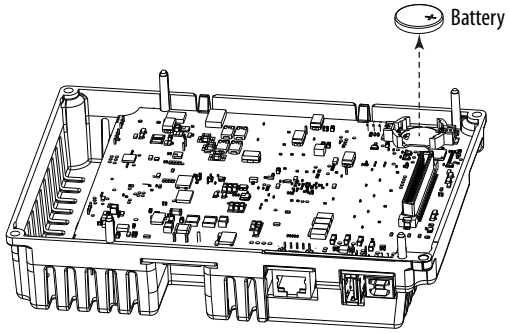

5. Remove the battery by lifting the side of the battery.
6. Insert the new battery so the positive (+) polarity faces up.

7. Reattach the logic module by aligning the connector on the bottom of the logic module with the connector on the display module.

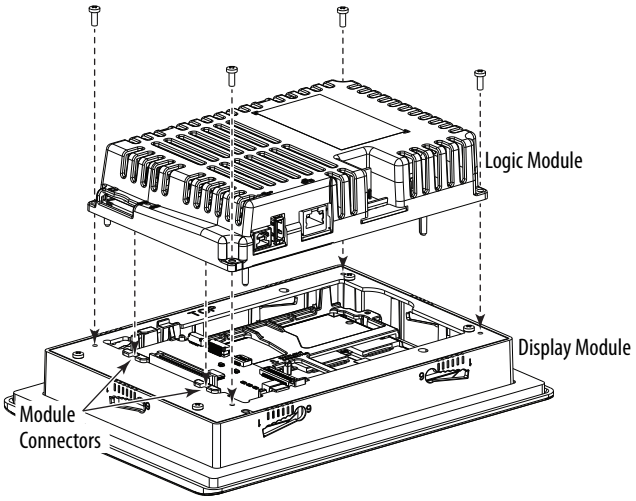

8. Push down on the logic module and make sure that it is fully seated.
9. Torque the screws to 0.68...0.90 N•m (6...8 lb•in).

Update Firmware

Topic	Page
Before You Begin	87
Get the Terminal Firmware	87
Install the ControlFLASH Plus Software	88
Update the Firmware by Using ControlFLASH Plus Software	88
Verify the Firmware Update	89

Before You Begin

Perform these tasks to prepare for the update:

- Verify that FactoryTalk® Linx and ControlFLASH Plus™ are installed.
- Verify that FactoryTalk Linx is configured with an Ethernet driver to communicate with the PanelView® 5000 terminal.
- Verify that downloads to the terminal are allowed. If downloads are disabled, you cannot update the terminal firmware.

  See Disable Downloads to the Terminal on page 58 and make sure that downloads are allowed to the terminal.
- Verify the catalog number of your product and the current firmware revision on the terminal.

  See View the Firmware Revision on page 60 to get the catalog number and current firmware revision.
- Verify that you have a View Designer .vpd file of your application currently running on the PanelView 5000 terminal. If not, upload the application to View Designer, so you can re-download it after the firmware update.

  The firmware update clears the existing application on the PanelView 5000 terminal, but maintains configuration data such as Ethernet settings, display brightness, time and date, and touch screen settings.

Get the Terminal Firmware

To download terminal firmware and release notes, see Product Firmware and Release Notes on page 8.

The terminal firmware is also typically installed along with Studio 5000 in default folder C:\Users\Public\Documents\Rockwell Automation\Firmware Kits.

Install the ControlFLASH Plus Software

ControlFLASH Plus or ControlFLASH software is required to update firmware on the PanelView 5310 terminal. This software is included in the Studio 5000® installation package.

For details on how to install ControlFLASH software, see the ControlFLASH Plus Quick Start Guide, publication CFP-QS001.

Update the Firmware by Using ControlFLASH Plus Software

To use the ControlFLASH Plus software to update the firmware in a PanelView 5310 terminal, follow these steps.

1. Click Start>FLASH Programming Tools>ControlFLASH Plus.
2. To open the FactoryTalk Linx Network Browser, click the Network Browse button.

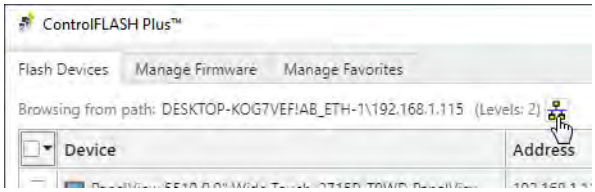

3. Select your PanelView 5000 terminal, and click OK.

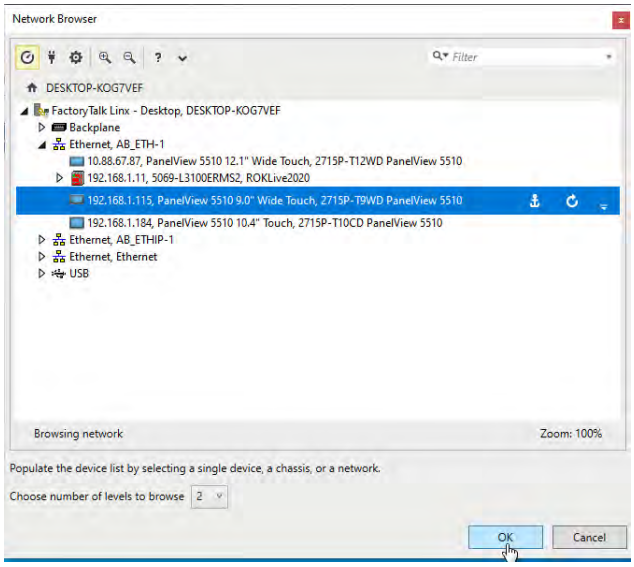

4. Select the firmware version to use in the Flash To column, make sure the checkbox to the left of your PanelView 5000 terminal is selected, and then press Next.

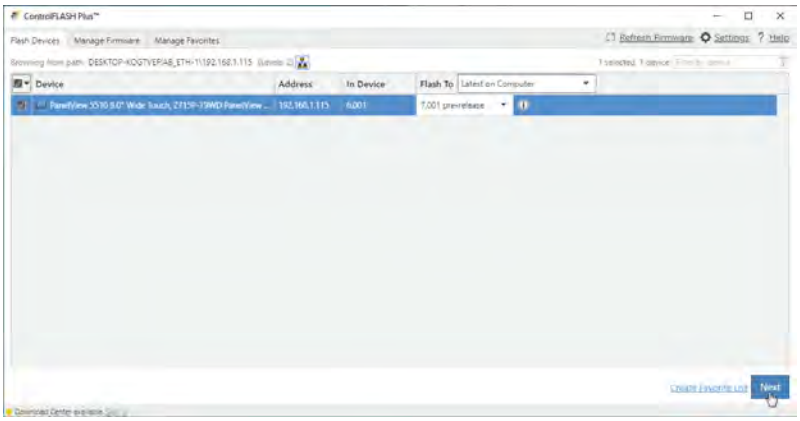

5. Read the warning and confirm the flash update by pressing Flash.



6. Once the flash update is complete, press Close.

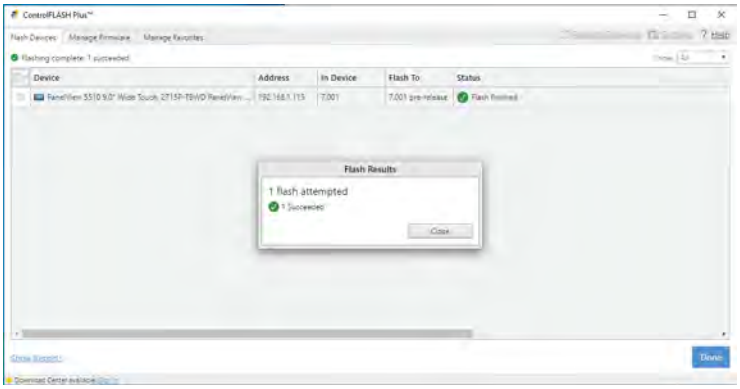

7. To exit ControlFLASH Plus, press Done.

Verify the Firmware Update

To verify that the firmware revision is updated, use the HMI Device settings. For instructions on how to do this, see View the Firmware Revision on page 60.

Notes:

Troubleshooting

Topic	Page
Status Indicators	92
Troubleshooting Profiles	92
Terminal Does Not Start Up	97
Terminal Restarts Intermittently	97
Touch Screen Issues	97
Display Issues	98
Ethernet Issues	99
Cannot Download Application to Terminal	99
Performance Is Slow	99
Resistance to Chemicals	100
Clean the Display	100
Ship the Terminal	101
Restore Factory Defaults	101
Dispose of the Terminal	102

Status Indicators

The back of the terminal has two indicators to identify system status:

- Status (STS) indicates that the terminal is on and in use. Its light color is green.
- Error (ERR) indicates hardware and firmware faults. Its light color is red.

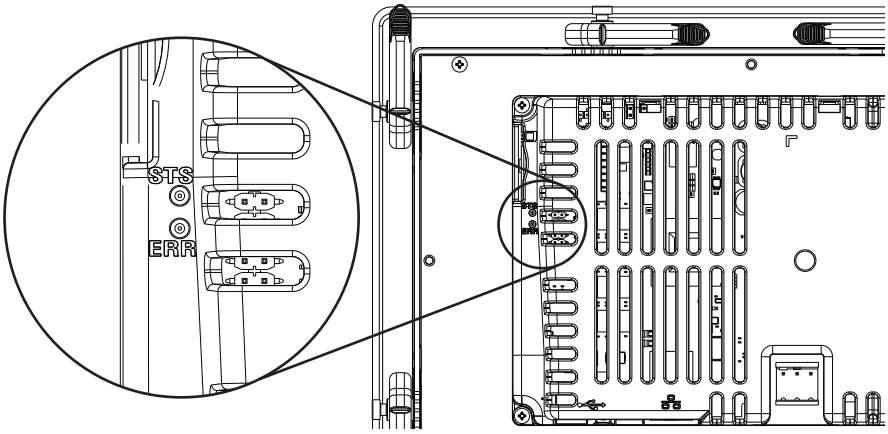

At startup, the STS and ERR indicators blink on and off, then the STS indicator blinks to signal progress during startup. If the indicators remain off, check the power cable.

After a successful startup, the STS indicator remains on.

Table 21 shows indicator states if the terminal stops during startup.

Table 21 - Fault Indicator States during Terminal during Startup

ERR (red) Indicator	STS (green) Indicator	Description	Recommended Action
Blinking	On	Recoverable firmware error.	Reload the firmware.
	Off	Recoverable configuration failure	Restore factory defaults. Refer to Restore Factory Defaults on page 101.
On	On	Fatal hardware error	Replace the terminal.
	Blinking	Fatal display hardware error	Verify that nothing is touching the terminal during startup and try rebooting the terminal again. If the indicator continues to blink after the second startup attempt, replace the terminal.

Troubleshooting Profiles

Rockwell Automation compiles data about your system in a secure, encrypted format. This profile is stored on the terminal and can be used to improve usability and assist with troubleshooting.

If you contact technical support, a representative can ask you to export the troubleshooting log to a USB drive, or SD™ or SDHC™ card. You can also import a troubleshooting profile from a USB drive or SD card to capture additional data.

TIP If removable media is needed, then the USB device or SD card must be FAT32 formatted, have write permissions, and sufficient space.

Import a Troubleshooting Profile

The Troubleshooting window indicates whether a default or imported troubleshooting profile is being used in the terminal. If an imported file is in use, a green check mark and the name of the imported file appears next to the Import Profile button.

To import a troubleshooting profile from a USB drive or SD card, follow these steps.

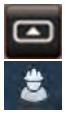

1. Press the navigation button on an application screen.
2. On the Settings screen, tap Troubleshooting.
3. Insert a USB drive or SD card that contains the troubleshooting profile into the appropriate slot on the terminal.
4. Tap Import Profile.



5. Tap to select the target USB device or SD card that contains the profile.
6. Tap Save.



7. To close the window, tap OK.

The name of the imported file is displayed. A green check next to the file name means that the import is complete.

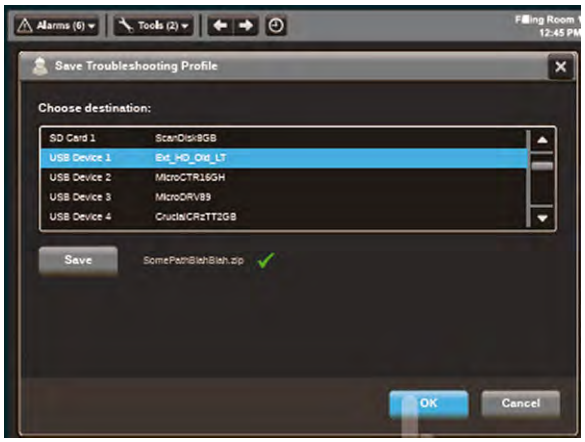

ATTENTION: Do not remove the USB drive or SD card before the import operation is complete. Otherwise, the USB drive or SD card can become corrupt.

8. Tap OK.

   The file is stored on the terminal and captures data in an encrypted format for use by Rockwell Automation technical support.

Export a Troubleshooting Log

To export the troubleshooting log to a USB device or SD card, follow these steps.

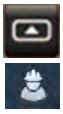

1. Press the navigation button on an application screen.
2. On the Settings screen, tap Troubleshooting.
3. Insert a USB drive or SD card into a slot on the terminal.
4. Tap Export.



The troubleshooting log is exported and the date a time of the last export is displayed next to the Export button.

ATTENTION: Do not remove the USB drive or SD card before the import operation is complete. Otherwise, the USB drive or SD card can become corrupt.

5. To close the window, tap  .

Your technical support contact at Rockwell Automation can provide you with information on where to send the profile.

Terminal Does Not Start Up

If the terminal does not start up normally, check the table for possible causes.

Table 22 - Terminal Does Not Start Up Properly

Check For	What to Do	See
Insufficient power	Make sure that device is receiving adequate power: • Check the DC power requirements.	page 33
Improper power wiring	Verify that the power wiring is correct: • Check the wiring specifications. • Check the DC power wiring.	page 32 page 33
Status indicators	Check the status indicators during startup.	page 92
Stalled progress indicator	If a terminal stalls at the progress indicator and does not load an application or configuration screens, restore the factory defaults.	page 101
Does an object touch the display	Verify that nothing is pressing against the display or that you are not touching the display during startup.	

Terminal Restarts Intermittently

If the terminal restarts intermittently, check the table for possible causes.

Table 23 - Terminal Restarts Intermittently

Check For	What to Do	See
Improper power wiring	Verify that the power wiring is correct: • Check the wiring specifications. • Check the DC power wiring.	page 32 page 33
Over-temperature conditions	Make sure that the processor is not exceeding temperatures for normal terminal operations: • Check the processor temperature. • Check for adequate clearances around the terminal in the panel. • Check for the proper operating temperature.	page 61 page 23 page 61

Touch Screen Issues

If the touch screen does not operate or respond correctly to touches with a finger or stylus, check the table for possible causes.

Table 24 - Touch Screen Not Responding

Check For	What to Do	See
Improper calibration	Check for activation points offset from touch points. Calibrate the touch screen.	page 56
Non-functional touch screen	Check the touch screen for damage, such as cuts or excessive wear. If there is damage, replace the terminal.	
Multiple input elements touched	Application screens contain graphic input elements that are configured in the View Designer application. When touched, these elements perform operations in a predictable manner. For example, an input element is configured to navigate to a specific screen in the application or start a motor when touched. Multiple operations cannot be conducted simultaneously. Doing so results in an unintended operation. • Do not touch multiple input elements at one time. • Do not rest a hand or multiple fingers on the display.	

Display Issues

The display is unreadable or dims unexpectedly.

ATTENTION: If the display darkens, or if the backlight is not functioning properly, the screen can be difficult to read and use of this touch screen could result in a potentially hazardous outcome. **Do not use the touch screen under these circumstances.** The design of the system must take into account the possibility of the touch screen losing functionality and unable to be used to maintain or change control of the system. The touch screen shall not be the single point of control of critical functions and is not intended to replace an E-stop.

Design of the system should follow all applicable code and good engineering practice. Factors to consider include:

- The possibility of an unreadable display
- The possibility of an inoperable touch screen
- Unexpected communication errors or delays
- Operator error in the control of the system
- Proper use of E-stops and other safety practices

The user shall provide means to achieve a safe state during anomalies and make sure the system has adequate redundancy for critical functions.

Failure to follow these instructions can result in death, serious injury, or equipment damage.

Table 25 - Dim Display

Check for	See
Low display brightness setting	Adjust the Brightness of the Display on page 53
Low brightness level of screen saver	Configure the Display Screen Saver on page 54

TIP Extend the life of the backlight by reducing the display brightness, by using the screen saver with reduced brightness, or operating at lower temperatures.

Ethernet Issues

Table 26 provides tips on how to isolate Ethernet anomalies.

Table 26 - Ethernet Connection Issues

Check for	Description
Status of invalid Ethernet connection	• Green indicator is on when a link is established. • Yellow indicator blinks when activity is detected. • Verify network connections.
Poor cable connections	Check the Ethernet cabling for the following: • Make sure that the cable is fully connected. • Check for cable crimping. • Check the Ethernet switch connections. • Check the Uplink ports.
Invalid IP address of terminal	If DHCP is enabled, the terminal automatically acquires a valid IP address from the network after startup. The TCP/IP protocol automatically assigns 169.254.*xxx.xxx* when it fails to acquire an IP address from the network. In general, an IP address that begins with 169 does not support a network connection. See Configure the IP Address of the Terminal on page 47.
Conflict Between IP addresses	If DHCP is not enabled and a static IP address is specified, make sure that the IP address does not conflict with the address of another device on the network. See Configure the IP Address of the Terminal on page 47.

Cannot Download Application to Terminal

You are unable to download an application to the terminal.

Table 27 - Unable to Download Project to Terminal

Check for	Description
Application downloads are disabled in Settings screens	Verify that downloads are enabled. See Disable Downloads to the Terminal on page 58.
Download of project to correct HMI device	Check the following in the View Designer application: • The project that is downloaded to the correct HMI device • IP address of HMI device is correct
Ethernet connection	Make sure that an Ethernet cable is connected between the computer and terminal. Verify that the Ethernet port is configured properly. See Configure the Ethernet Port on page 50.

Performance Is Slow

If the response time of the application is slow, for example screen changes or text display changes, check for the following conditions:

- Application screens that contain too many elements
- The controller has sufficient bandwidth for communications.
- Slow network performance or noise that result in retries

Resistance to Chemicals

The outer surfaces of the terminal including the bezel, touch screen overlay, and panel gasket are tested for chemical resistance. Some of the chemicals can cause discoloration, but they do not interfere with the operation of the terminal.

TIP For more information on chemical resistance of the product, go to https://rockwellautomation.custhelp.com/ and search the Knowledgebase for keywords 'Chemical Resistance PanelView Plus'.

IMPORTANT Do not operate the terminal in direct sunlight. Direct exposure to ultraviolet light can discolor the touch screen.

Clean the Display



ATTENTION: Do not use abrasive cleaners or solvents, they can damage the display. Do not scrub or use brushes.

Do not apply cleaning solution directly on the terminal screen, the solution can drip or seep onto the gasket. Apply cleaning solution to a clean sponge or soft cloth, and gently wipe the screen to remove the dirt and grime.

To clean the display, follow these steps.

1. Disconnect power from the terminal at the power source.

   

   ATTENTION: Do not clean a display while power is applied. If you clean a display while power is applied, you can unintentionally activate screen items.

2. To clean the display and help prevent scratches, use a clean sponge or soft cloth with mild soap or detergent.
3. Dry the display with a chamois or moist cellulose sponge to avoid water spots.

Remove Paint and Grease

To remove paint or grease from the bezel that is properly mounted in a NEMA, UL Type, or IP rated enclosure, follow these steps.

1. Rub lightly with isopropyl alcohol (70% concentration).
2. To remove residue, use a mild soap or detergent solution.
3. Rinse with clean water.

Equipment Wash Downs

ATTENTION: Do not use a high-pressure washer for cleaning the front bezel of the terminal. A high-pressure washer can damage the terminal.

Do not use a high-pressure washer for cleaning vented enclosures. Water can enter the enclosure and damage the terminal and other equipment.

Ship the Terminal

If you ship the enclosure with the terminal installed, make sure that the terminal is properly secured and protected against damage from impact, sharp objects, or abrasive materials.

ATTENTION: Rockwell Automation is not responsible for damage to a product that is shipped or transported while installed in a panel or enclosure.

Restore Factory Defaults

Restore a terminal to its default settings to refresh the terminal or to recover from an invalid application configuration. The restore process does not affect the firmware revision on the terminal.

ATTENTION: The process that restores factory defaults also removes some data.

- Upload the application with the View Designer application.
- Record the terminal settings so you can update them after the restore.

TIP If a terminal stalls at the progress indicator after a restart and does not load the application or configuration screens, you can restore the factory defaults.

The restore procedure performs the following actions:

- Removes the user application
- Restores the terminal settings to their default state

Table 28 - Factory-default Terminal Settings

Terminal Settings	Factory Default Setting
Backlight intensity: 1…100%	100%
Screen saver • Enabled or disabled • Timeout • Dimmer: 1…100%	 • Disabled • 10 minutes • 10%
Touch screen calibration	Factory calibrated
Ethernet • DHCP-enabled or static IP address • Speed: 10 Mbps, 100 Mbps, Auto sense • Duplex: Half, full, auto sense	 • DHCP-enabled • Auto sense link speed • Auto sense duplex mode

To restore the terminal to its default state, follow these steps.

1. Cycle power to the terminal.

   The Allen-Bradley logo displays during startup.

2. Wait a few seconds, and then touch the Allen-Bradley logo when the copyright line becomes brighter.

   Copyright ©2017 Rockwell Automation

   TIP Wait a few seconds before you touch the logo. If you touch the logo too soon during startup, this error text is displayed under the copyright line.

   ERROR! FEHLER! ERREUR! ERRORE!

   If this error text is displayed, cycle power to the terminal and wait a few seconds longer before you touch the logo.

   The normal startup is suspended so the restore procedure can initiate.

   You are asked if you want to restore the terminal to its defaults.

3. To continue, tap Yes, or tap Cancel to resume a normal startup.

   You are asked to confirm the removal of all user files such as applications.

4. To continue, tap Yes, or tap Cancel to resume a normal startup.

   Progress messages appear on the screen during the restore operation. When the restore is complete, the terminal performs a normal startup.

5. From the Settings menu, update the terminal network settings.
6. Download an application to the terminal by using the View Designer application.
7. From the Settings menu, update any remaining terminal settings as appropriate.

Refer to Disable Downloads to the Terminal on page 58 for details on how to modify device configuration settings.

Dispose of the Terminal



At the end of its life, collect the terminal separately from any unsorted municipal waste.

These terminals contain heavy metals that can contaminate the earth. Therefore, check with local health and sanitation agencies for ways to dispose this equipment safely.

A

accessories 16
ACD file 15
alarm
- condition 70
- details 70
- filter 72
- function keys 66
- manager 69
- summary 68

application
- overview 15

application download security 56

B

back-up power 78
battery
- back-up power 78
- lithium 78
- replacement 79
- state 59

branch circuit 21

C

cable
- lengths between Ethernet ports 35

calibration
- touch screen 54

catalog numbers
- accessories 16
- battery replacement 17
- explanation 16
- mounting hardware 16
- PanelView 5300 terminals 16
- power supplies 16
- power terminal blocks 16
- SD cards 17
- USB programming cable 17

circuit breaker rating 21
ControlFLASH software 81, 82
cutout dimensions 24

D

date and time
- setting 63

DC power bus 33
device name 57
DHCP 46
diagnostics
- data 59
- network 50

dimensions
- product 25

disable downloads to the terminal 56
display
- brightness 52
- unreadable or dimming 94

DNS address
- primary 48
- secondary 48
- tertiary 48

E

earth ground
- connection 34
- wire 34

electrostatic discharge 75
environment and enclosure specifications 20, 21
equipment wash downs 97
Ethernet
- connector pinout 35
- status indicators 35

Ethernet port
- duplex mode 49
- link speed 49

explosion hazard 78

F

factory defaults 97
firmware revision 58
firmware update 81
firmware upgrade
- requirements 82

fuse rating 21

H

hardware specifications
- display/touch screen 12
- Ethernet port 12
- SD card slot 12
- status indicators 12
- USB device port 12
- USB host port 12

hazardous location 21

I

indicators
ERR 88
error 88
fault 88
status 88
STS 88
installation
environment and enclosure 22
hazardous location 21
product dimensions 25
IP address
DHCP 46
static 47
IP settings
configuration 47

K

keyboard
virtual 41

L

ladder logic 7
lithium batteries
safe handling 78
log off of the terminal 44
log on to the terminal 43
Logix Designer 14

M

mount the terminal
ambient temperature 23
cutout dimensions 24
minimum clearances 23
mounting levers 26
panel guidelines 24
preparation 26

N

network
types supported 34
network diagnostics 50
network topology
linear 36
star 36
numeric keypad
virtual 41

P

power
24V DC nominal 33
connection 33
DC bus 33
ratings 33
specification 12
supplies 33
terminal block
install 32
remove 32
wire specifications 32
power supply
PELV 33
SELV 33
product compatibility and download center 8
product dimensions 25
publications
download 9

R

reboot the terminal 62
release notes 8
restore factory defaults 97
RJ45 connector 35
runtime 15, 39

S

safety notices
battery replacement 78
earth ground connection 34
electrical arc 32, 35
mounting the terminal 29
unintended operation 13
water or chemical damage 29
screen saver 53
SD card
installing 77
slot 77
startup sequence 37
status indicators
Ethernet 35
Studio 5000 Logix Designer 7
see also Logix Designer
Studio 5000 View Designer 7
see also View Designer

T

tag browser 15
terminal block
power 32
time and date
setting 63
touch screen
calibration 54
input 13
troubleshooting 87
log, exporting 91
profile, importing 90

U

USB
cables 77
host connections 76
hubs 76
USB to serial port adapters 17

V

View Designer 14
virtual
keyboard 41
numeric keypad 41
VPD file 15

W

wash downs 97
wiring and safety guidelines 21

(7)

COMMUNICATION EQUIPMENT
(FIBER TO COPPER TRANSCEIVERS)

Specifications Section 16125-2.1B

PHOENIX CONTACT

8 PORT MANAGED ETHERNET SWITCH
2701554 (FL SWITCH 7006-2GC-EIP)

FIBER TRANSCEIVER CARTRIDGE
2891081 (FL-SFP-FX)

10 PORT MANAGED SWITCH
2702981 (FL NAT 2304-2GC-2SFP)

10 PORT MANAGED SWITCH W/SFP PORTS
2701418 (FL SWITCH 7008-EIP)

Industrial Ethernet Switch - FL SWITCH 7006-2GC-EIP - 2701554

Please be informed that the data shown in this PDF Document is generated from our Online Catalog. Please find the complete data in the user's documentation. Our General Terms of Use for Downloads are valid (http://phoenixcontact.com/download)



Managed Switch 7000, 6 RJ45 ports 10/100 Mbps, 2 Combo ports 10/100/1000 Mbps, degree of protection: IP20, PROFINET Conformance-Class A, EtherNet/IP™

Your advantages

- Device Level Ring (DLR)
- Common Industrial Protocol (CIP)
- DHCP client, DHCP server (pool-based and port-based), DHCP option 82
- VLANs
- RSTP with fast switch-over
- -40°C ... +70°C ambient temperature
- Slim design
- Web-based management, SNMP

RoHS EtherNet/IP

Key Commercial Data

Packing unit	1 pc
GTIN	4 046356 766807
GTIN	4046356766807
Weight per Piece (excluding packing)	1,140.000 g
Custom tariff number	85176200
Country of origin	Germany

Technical data

Note

Utilization restriction	EMC: class A product, see manufacturer's declaration in the download area

Industrial Ethernet Switch - FL SWITCH 7006-2GC-EIP - 2701554

Technical data

Dimensions

Width	60 mm
Height	130 mm
Depth	135.5 mm

Ambient conditions

Degree of protection	IP20
Ambient temperature (operation)	-40 °C ... 70 °C
Ambient temperature (storage/transport)	-40 °C ... 85 °C
Permissible humidity (operation)	10 % ... 95 % (non-condensing)
Permissible humidity (storage/transport)	10 % ... 95 % (non-condensing)
Air pressure (operation)	86 kPa ... 108 kPa (1500 m above sea level)
Air pressure (storage/transport)	66 kPa ... 108 kPa (3500 m above sea level)

Interfaces

Interface	Ethernet (RJ45)
No. of ports	6 (RJ45 ports)
Note on the connection method	Auto negotiation and autocrossing
Transmission physics	Copper
Transmission speed	10/100 Mbps
Transmission length	100 m (per segment)
Signal LEDs	Data receive, link status
Interface	Ethernet (combo)
No. of ports	2 (Combo ports)
Connection method	SFP or RJ45 ports
Note on the connection method	Auto negotiation and autocrossing
Transmission physics	Depending on the SFP module
Transmission speed	10/100/1000 Mbps (full duplex)
Transmission length	up to 80 km (Depending on the fiber/SFP module used)
Signal LEDs	Data receive, link status

Function

Basic functions	Store-and-forward switch, complies with IEEE 802.3
Configuration memory	max. 8 GByte (SD card)
Management	Web-based management (HTTP/HTTPS)
	SNMPv1/v2/v3
Diagnostic functions	Remanente Event-Table
	RMON History
	N:1-Portmirroring
	LLDP (Link Layer Discovery Protocol)

Industrial Ethernet Switch - FL SWITCH 7006-2GC-EIP - 2701554

Technical data

Function

	SNMP-Traps
	ACD (Address Conflict Detection)
Filter functions	Quality of Service (8 priority classes)
	Port-Priorisierung
	VLAN (up to 32 VLANs)
	IGMP Snooping/Querier (v1/v2)
	Auto-Query-Port
	Extended Multicast Filtering
	Static Multicast Filtering (32 groups)
	Link Aggregation (up to 4 trunks)
Redundancy	DLR (Device Level Ring)
	RSTP (Rapid Spanning Tree Protocol)
	FRD (Fast Ring Detection)
	Large Tree Support
Additional functions	MAC-based Port Security
MAC address table	16k
IP parameterization	DHCP-Client
	DHCP Option 82 (Relay Agent)
	DHCP server (pool-based, port-based)
	BootP
PROFINET device function	Fast Startup
PROFINET conformance class	Conformance-Class A
EtherNet/IP™ supported protocols	Common Industrial Protocol (CIP)
Time synchronization	PTP 1588 (Transparent clock on the DLR ports)
Status and diagnostic indicators	LEDs: US1, US2 (power supply), Fail (alarm contact), 2 LEDs per Ethernet port (Link and switchable Activity/Speed/Duplex) EtherNet/IP™ status LED: Net, Mod
Signal contact control voltage	24 V DC (typical)
Signal contact control current	1 A (maximum)

Network expansion parameters

Cascading depth	Network, linear, and star structure: any
Maximum conductor length (twisted pair)	100 m

Supply voltage

Supply voltage	24 V DC (redundant)
Residual ripple	3.6 V_{PP} (within the permitted voltage range)
Supply voltage range	12 V DC ... 58 V DC
Typical current consumption	520 mA (at U_S = 24 V DC)

Industrial Ethernet Switch - FL SWITCH 7006-2GC-EIP - 2701554

Technical data

Supply voltage

Current consumption	520 mA

General

Mounting type	DIN rail
Type AX	Book type
Net weight	1010 g
Special properties	EtherNet/IP™
MTTF	142.37 Years (SN 29500 standard, temperature 25°C, operating cycle 21%)
	86.72 Years (SN 29500 standard, temperature 40°C, operating cycle 34.25%)
	15.25 Years (SN 29500 standard, temperature 70°C, operating cycle 100%)

Connection data

Connection method	Screw connection
Conductor cross section solid min.	0.2 mm²
Conductor cross section solid max.	2.5 mm²
Conductor cross section flexible min.	0.2 mm²
Conductor cross section flexible max.	2.5 mm²
Conductor cross section AWG min.	24
Conductor cross section AWG max.	12
Stripping length	7 mm

Standards and Regulations

Electromagnetic compatibility	Conformance with EMC Directive 2004/108/EC
Type of test	Vibration resistance in acc. with EN 60068-2-6/IEC 60068-2-6
Test result	Operation/Storage/Transport: 5g, 150 Hz, Criterion 3
Noise emission	EN 61000-6-4
Noise immunity	EN 61000-6-2:2005
Vibration (storage/transport)	5g, 150 Hz, in acc. with IEC 60068-2-6
Free from substances that could impair the application of coating	Yes
Vibration (operation)	in acc. with IEC 60068-2-6: 5g, 150 Hz
Noxious gas test	ISA S71.04.2013 G3 Harsh Group A

Environmental Product Compliance

REACh SVHC	Lead 7439-92-1
China RoHS	Environmentally Friendly Use Period = 50 years
	For details about hazardous substances go to tab “Downloads”, Category “Manufacturer's declaration”

Industrial Ethernet Switch - FL SWITCH 7006-2GC-EIP - 2701554

Classifications

eCl@ss

eCl@ss 10.0.1	19170401
eCl@ss 11.0	19170401
eCl@ss 4.0	27250500
eCl@ss 4.1	27250500
eCl@ss 5.0	19030100
eCl@ss 5.1	19030100
eCl@ss 6.0	19170100
eCl@ss 7.0	19170106
eCl@ss 8.0	19170106
eCl@ss 9.0	19170106

ETIM

ETIM 3.0	EC000734
ETIM 4.0	EC000734
ETIM 5.0	EC000734
ETIM 6.0	EC000734
ETIM 7.0	EC000734

UNSPSC

UNSPSC 6.01	43172015
UNSPSC 7.0901	43201404
UNSPSC 11	43172015
UNSPSC 12.01	43201410
UNSPSC 13.2	43222612
UNSPSC 18.0	43222612
UNSPSC 19.0	43222612
UNSPSC 20.0	43222612
UNSPSC 21.0	43222612

Approvals

Approvals

Approvals

UL Listed / cUL Listed / cULus Listed

Industrial Ethernet Switch - FL SWITCH 7006-2GC-EIP - 2701554

Approvals

Ex Approvals

UL Listed / cUL Listed / cULus Listed

Approval details

UL Listed		http://database.ul.com/cgi-bin/XYV/template/LISEXT/1FRAME/index.htm	FILE E 140324
cUL Listed		http://database.ul.com/cgi-bin/XYV/template/LISEXT/1FRAME/index.htm	FILE E 140324
cULus Listed			

Phoenix Contact 2020 © - all rights reserved
http://www.phoenixcontact.com

OU1 MCP-100

Industrial Ethernet Switch - FL NAT 2304-2GC-2SFP - 2702981

Please be informed that the data shown in this PDF Document is generated from our Online Catalog. Please find the complete data in the user's documentation. Our General Terms of Use for Downloads are valid (http://phoenixcontact.com/download)



The figure shows a version of the product

Managed NAT Switch 2000, 4 RJ45 ports 10/100/1000 Mbps, 2 SFP ports 100/1000 Mbps, 2 Combo ports 10/100/1000 Mbps, degree of protection: IP20, PROFINET Conformance-Class B, 1:1-NAT, Virtual NAT, IP-Masquerading

Your advantages

- Suitable for PROFINET and EtherNet/IP™ networks
- Easy and fast startup and commissioning with the FL NETWORK MANAGER software
- Configuration memory
- RSTP
- DHCP client, DHCP server (pool-based and port-based), DHCP option 82
- VLANs
- MRP (client and master)
- Web-based management, SNMP
- Slim design
- -40°C ... +70°C ambient temperature
- Flexible distribution into several LAN and WAN areas
- 1:1 NAT, virtual NAT, IP masquerading, port forwarding

Key Commercial Data

Packing unit	1 pc
GTIN	4 055626 446035
GTIN	4055626446035
Weight per Piece (excluding packing)	460.000 g
Custom tariff number	85176200
Country of origin	Germany

192.168.0.254

192.168.0.254

App Suite. Inbox | Rockwell Automati... | Sierra Wireless Con... | Fix all Windows up...

PHOENIX CONTACT



FL NAT 2304-2GC-2SFP

- + Information
- - Configuration
  - System
  - **Quick Setup**
  - Network
  - Service
  - Port Configuration
  - VLAN Configuration
  - Multicast Filtering
  - Network Redundancy
  - Security
  - DHCP Service
  - Local Events
  - Quality of Service
  - Routing
  - NAT
- + Diagnostics

Copyright© by Phoenix Contact GmbH&Co.KG and Other

OU1

Quick Setup

Automation Profile (?) Universal | ETH/IP | Profinet

IP Address Assignment (?) STATIC

IP Address (?) 192.168.0.254

Network Mask (?) 255.255.255.0

Default Gateway (?) 0.0.0.0

Administrator Password (?)

Retype Password (?)

Operating Mode/Automation Procotol (?) None

Device Name (?) OU1

Device Description (?) OU1_ENET_SW

Apply | Revert | Apply&Save

Type here to search

12:16 PM
6/3/2021

192.168.0.254

192.168.0.254

App Suite. Inbox | Rockwell Automati... | Sierra Wireless Con... | Fix all Windows up...

PHOENIX CONTACT



FL NAT 2304-2GC-2SFP

- + Information
- - Configuration
  - System
  - Quick Setup
  - **Network**
  - Service
  - Port Configuration
  - VLAN Configuration
  - Multicast Filtering
  - Network Redundancy
  - Security
  - DHCP Service
  - Local Events
  - Quality of Service
  - Routing
  - NAT
- + Diagnostics

Copyright© by Phoenix Contact GmbH&Co.KG and Other

OU1

Network

IP Address Assignment	(?)	STATIC
IP Address	(?)	192.168.0.254
Network Mask	(?)	255.255.255.0
Default Gateway	(?)	0.0.0.0
Management VLAN	(?)	1
ACD Mode	(?)	None
ACD Status Information	(?)	See ACD status on Device status page

Apply | Revert | Apply&Save

PHOENIX CONTACT



FL NAT 2304-2GC-2SFP

+ Information
- Configuration
System
Quick Setup
Network
Service
Port Configuration
VLAN Configuration
Multicast Filtering
Network Redundancy
Security
DHCP Service
Local Events
Quality of Service
Routing
NAT
+ Diagnostics

Copyright© by Phoenix Contact GmbH&Co.KG and Other

OU1

Service

Operating Mode/Automation Procotol	(?)	None
Web Server	(?)	HTTP
SNMP Agent	(?)	SNMP v2
CLI Service	(?)	Telnet
CLI Network Scripting UI	(?)	Enable
Persistent Event Logging	(?)	Disable

LLDP Configuration

LLDP Mode	(?)	Enable
LLDP Transmit Interval	(?)	5
LLDP Transmission	(?)	1 2 3 4 5 6 7 8 ☑ ☑ ☑ ☑ ☑ ☑ ☑ ☑
LLDP Reception	(?)	1 2 3 4 5 6 7 8 ☑ ☑ ☑ ☑ ☑ ☑ ☑ ☑
LLDP Topology	(?)	Link to LLDP Topology webpage

System Time

Current system time	(?)	2021/06/03 06:55:46 UTC-5
Manual time set	(?)	click to set time
Network time protocol	(?)	None

Apply | Revert | Apply&Save

192.168.0.254

192.168.0.254

App Suite. Inbox | Rockwell Automati... | Sierra Wireless Con... | Fix all Windows up...

PHOENIX CONTACT



FL NAT 2304-2GC-2SFP

- + Information
- - Configuration
  - System
  - Quick Setup
  - Network
  - Service
  - **Port Configuration**
  - VLAN Configuration
  - Multicast Filtering
  - Network Redundancy
  - Security
  - DHCP Service
  - Local Events
  - Quality of Service
  - Routing
  - NAT
- + Diagnostics

Copyright© by Phoenix Contact GmbH&Co.KG and Other

OU1

Port Configuration

Individual Port Configuration

Port	(?)	port-1
Status	(?)	Enable
Name	(?)	Port 1
Type	(?)	TX 10/100/1000
Link	(?)	Connected
Negotiation Mode	(?)	Auto
Speed	(?)	100 MBit/s
Duplex	(?)	Full Duplex
Mode	(?)	Auto
Link Monitoring	(?)	Disable
Default Priority	(?)	0
Jumbo Frames	(?)	Disable
MTU	(?)	1536
Flow Control	(?)	Disable

Advanced Port Configuration

Apply | Revert | Apply&Save

192.168.0.254

192.168.0.254

App Suite. Inbox | Rockwell Automati... | Sierra Wireless Con... | Fix all Windows up...

PHOENIX CONTACT



FL NAT 2304-2GC-2SFP

- + Information
- - Configuration
  - System
  - Quick Setup
  - Network
  - Service
  - Port Configuration
  - VLAN Configuration
  - **Multicast Filtering**
  - Network Redundancy
  - Security
  - DHCP Service
  - Local Events
  - Quality of Service
  - Routing
  - NAT
- + Diagnostics

Copyright© by Phoenix Contact GmbH&Co.KG and Other

OU1

Multicast Filtering

IGMP

IGMP Snooping	(?)	enable
Snoop Aging Time	(?)	300
IGMP Query Version	(?)	Version 2
Query Interval	(?)	125
Current Querier	(?)	192.168.0.113

IGMP Extensions

Extension FUQ	(?)	enable
Extension BUQ	(?)	enable
Auto Query Ports	(?)	enable
	(?)	Clear AQP

Static Query Ports	(?)	1	2	3	4	5	6	7	8
		☐	☐	☐	☐	☐	☐	☐	☐

(?) Current multicast groups

Apply | Revert | Apply&Save

192.168.0.254

192.168.0.254

App Suite. Inbox | Rockwell Automati... | Sierra Wireless Con... | Fix all Windows up...

PHOENIX CONTACT



FL NAT 2304-2GC-2SFP

- + Information
- - Configuration
  - System
  - Quick Setup
  - Network
  - Service
  - Port Configuration
  - VLAN Configuration
  - Multicast Filtering
  - **Network Redundancy**
  - Security
  - DHCP Service
  - Local Events
  - Quality of Service
  - Routing
  - NAT
- + Diagnostics

Copyright© by Phoenix Contact GmbH&Co.KG and Other

OU1

Network Redundancy

Spanning-Tree Configuration

RSTP Mode	(?)	802.1w
Large Tree Support	(?)	Disable
Fast Ring Detection	(?)	Enable
Bridge Priority	(?)	32768
Bridge Hello Time	(?)	2
Bridge Forward Delay	(?)	15
Bridge Max Age	(?)	20

(?) RSTP Port Configuration

(?) RSTP Port Configuration Table

(?) RSTP Diagnostic

Media Redundancy Protocol (MRP)

MRP device mode	(?)	Disable

Apply | Revert | Apply&Save

Industrial Ethernet Switch - FL NAT 2304-2GC-2SFP - 2702981

Technical data

Note

Utilization restriction	Use in potentially explosive areas is not permitted in China.

Dimensions

Width	45 mm
Height	130 mm
Depth	115 mm

Ambient conditions

Degree of protection	IP20
Ambient temperature (operation)	-40 °C ... 70 °C
Ambient temperature (storage/transport)	-40 °C ... 85 °C
Permissible humidity (operation)	10 % ... 95 % (non-condensing)
Permissible humidity (storage/transport)	10 % ... 95 % (non-condensing)
Air pressure (operation)	79 kPa ... 108 kPa up to 2000 m above mean sea level (Without derating)
Air pressure (storage/transport)	79 kPa ... 108 kPa up to 2000 m above mean sea level (Without derating)
Degree of pollution	2

Interfaces

Interface	Ethernet (RJ45)
No. of ports	4 (RJ45 ports)
Note on the connection method	Auto negotiation and autocrossing
Transmission physics	Copper
Transmission speed	10/100/1000 Mbps
Transmission length	100 m (per segment)
Signal LEDs	Data receive, link status
Interface	SFP module
No. of ports	2 (SFP ports)
Transmission physics	Depending on the SFP module
Transmission speed	100/1000 Mbps (full duplex)
Transmission length	up to 80 km (Depending on the fiber/SFP module used)
Signal LEDs	Data receive, link status
Interface	Ethernet (combo)
No. of ports	2 (Combo ports)
Number of interfaces	2
Connection method	SFP or RJ45 ports
Note on the connection method	Auto negotiation and autocrossing
Transmission physics	Depending on the SFP module
Transmission speed	10/100/1000 Mbps (full duplex)

Industrial Ethernet Switch - FL NAT 2304-2GC-2SFP - 2702981

Technical data

Interfaces

Transmission length	up to 80 km (Depending on the fiber/SFP module used)
Signal LEDs	Data receive, link status

Function

Basic functions	Store-and-forward switch, complies with IEEE 802.3
Management	Web-based management (HTTP/HTTPS)
	Role-based user management
	SNMPv1/v2/v3
	Command-line interface (Telnet, SSH)
Diagnostic functions	RMON History
	LLDP (Link Layer Discovery Protocol)
	SNMP-Traps
	N:1-Portmirroring
	ACD (Address Conflict Detection)
	SysLog
	CRC-Surveillance
Filter functions	Quality of Service (8 priority classes)
	Class of Service
	DiffServ/DSCP
	Port-Priorisierung
	VLAN (up to 8 VLANs)
	IGMP Snooping/Querier (v1/v2)
	Auto-Query-Port
	Extended Multicast Filtering
NAT functions	1:1-NAT
	Virtual-NAT
	IP-Masquerading
	Port forwarding
Redundancy	MRP (Media Redundancy Protocol)
	RSTP (Rapid Spanning Tree Protocol)
	FRD (Fast Ring Detection)
	Large Tree Support
	LACP (Link Aggregation Control Protocol)
Additional functions	Jumbo frames (Max. 9,600 bytes)
MAC address table	8k
IP parameterization	DHCP-Client
	DHCP Option 82 (Relay Agent)
	DHCP server (pool-based, port-based)

Industrial Ethernet Switch - FL NAT 2304-2GC-2SFP - 2702981

Technical data

Function

	BootP
	DCP (Discovery and Configuration Protocol)
PROFINET device function	PROFINET device
PROFINET conformance class	Conformance-Class B
Time synchronization	SNTP (Simple Network Time Protocol)
Status and diagnostic indicators	LEDs: US1, US2 (power supply), Fail (alarm contact), 2 LEDs per Ethernet port (Link/Activity and Speed)
Signal contact control voltage	typ. 24 V DC

Security functions

Port security	MAC-based, RADIUS (IEEE 802.1X)

Network expansion parameters

Cascading depth	Network, linear, and star structure: any
Maximum conductor length (twisted pair)	100 m

Supply voltage

Supply voltage	24 V DC (redundant)
Residual ripple	3.6 V_{PP} (within the permitted voltage range)
Supply voltage range	12 V DC ... 57 V DC
Typical current consumption	290 mA (at U_S = 24 V DC and 25 °C ambient temperature)
Max. current consumption	1.5 A (U_S = Min, T_{amb} = Max, DO_I = Max)
Current consumption	290 mA

General

Mounting type	DIN rail
Type AX	Book type
Net weight	439 g
Housing material	Polycarbonate fiber reinforced
Note	Support by phone or on-site (fee is charged)
Special properties	1:1-NAT, Virtual NAT, IP-Masquerading
MTTF	362.94 Years (SN 29500 standard, temperature 25°C, operating cycle 21%)
	158.13 Years (SN 29500 standard, temperature 40°C, operating cycle 34.25%)
	19.77 Years (SN 29500 standard, temperature 70°C, operating cycle 100%)

Connection data

Connection method	Screw connection
Conductor cross section solid min.	0.08 mm²

Industrial Ethernet Switch - FL NAT 2304-2GC-2SFP - 2702981

Technical data

Connection data

Conductor cross section solid max.	1.5 mm²
Conductor cross section flexible min.	0.08 mm²
Conductor cross section flexible max.	1.5 mm²
Conductor cross section AWG min.	28
Conductor cross section AWG max.	16
Stripping length	7 mm

Standards and Regulations

Electromagnetic compatibility	Conformance with EMC Directive 2014/30/EU
Interference emission	EN 61000-6-2 EN 61000-6-4 (interference) Class A
Conducted noise emission	EN 61000-6-2 EN 61000-6-4 (conducted interference) Class A
Immunity to surge	EN 61000-6-2 EN 61000-4-5 (surge) Criterion A
Immunity to burst	EN 61000-6-2 EN 61000-4-4 (EFT burst) Criterion A
Immunity to EF	EN 61000-6-2 EN 61000-4-3 (electromagnetic fields) Criterion A
Immunity to ESD	EN 61000-6-2 EN 61000-4-2 (ESD) Criterion B
Immunity to conducted interference	EN 61000-6-2 EN 61000-4-6 (line noise immunity) Criterion A
Type of test	Free fall in accordance with EN 61131-2
Noise emission	EN 61000-6-4
Noise immunity	EN 61000-6-2
Vibration (storage/transport)	5g, 150 Hz, in acc. with IEC 60068-2-6
Free from substances that could impair the application of coating	Yes
Vibration (operation)	in acc. with IEC 60068-2-6: 5g, 150 Hz
Shock (operation)	30g (EN 60068-2-27)
ATEX	# II 3 G Ex ec IIC T4 Gc
IECEx	Ex ec IIC T4 Gc
UL, USA	UL 60079-0, Ed.6 / UL 60079-7, Ed.5
UL, USA/Canada	Class I, Div. 2, Groups A, B, C, D T4 Class I, Zone 2, IIC T4
UL, Canada	CSA C22.2 NO.60079-0, Ed.3 / CSA C22.2 NO.60079-7:16
Noxious gas test	ISA S71.04.2013 G3 Harsh Group A

Environmental Product Compliance

REACh SVHC	Lead 7439-92-1
China RoHS	Environmentally Friendly Use Period = 50 years
	For details about hazardous substances go to tab “Downloads”, Category “Manufacturer's declaration”

Industrial Ethernet Switch - FL NAT 2304-2GC-2SFP - 2702981

Classifications

eCl@ss

eCl@ss 10.0.1	19170401
eCl@ss 11.0	19170401
eCl@ss 5.0	19030100
eCl@ss 5.1	19030100
eCl@ss 6.0	19170100
eCl@ss 7.0	19170106
eCl@ss 8.0	19170106
eCl@ss 9.0	19170106

ETIM

ETIM 5.0	EC000734
ETIM 6.0	EC000734
ETIM 7.0	EC000734

Approvals

Approvals

Approvals

DNV GL / LR / ABS / BSH / RINA / UL Listed / cUL Listed / EAC / NK / BV / cULus Listed

Ex Approvals

UL Listed / cUL Listed / cULus Listed

Approval details

DNV GL	https://approvalfinder.dnvgl.com/	TAA00000YV
LR	http://www.lr.org/en	17/20056
ABS	http://www.eagle.org/eagleExternalPortalWEB/	17-HG1592765-1-PDA

Industrial Ethernet Switch - FL SWITCH 7008-EIP - 2701418

Please be informed that the data shown in this PDF Document is generated from our Online Catalog. Please find the complete data in the user's documentation. Our General Terms of Use for Downloads are valid (http://phoenixcontact.com/download)

Managed Switch 7000, 8 RJ45 ports 10/100 Mbps, degree of protection: IP20, PROFINET Conformance-Class A, EtherNet/IP™

Your advantages

- Device Level Ring (DLR)
- Common Industrial Protocol (CIP)
- DHCP client, DHCP server (pool-based and port-based), DHCP option 82
- VLANs
- RSTP with fast switch-over
- -40°C ... +70°C ambient temperature
- Slim design
- Web-based management, SNMP

RoHS EtherNet/IP

Key Commercial Data

Packing unit	1 pc
GTIN	4 046356 749732
GTIN	4046356749732
Weight per Piece (excluding packing)	1,000.000 g
Custom tariff number	85176200
Country of origin	Germany

Technical data

Note

Utilization restriction	EMC: class A product, see manufacturer's declaration in the download area

Industrial Ethernet Switch - FL SWITCH 7008-EIP - 2701418

Technical data

Dimensions

Width	60 mm
Height	130 mm
Depth	135.5 mm

Ambient conditions

Degree of protection	IP20
Ambient temperature (operation)	-40 °C ... 70 °C
Ambient temperature (storage/transport)	-40 °C ... 85 °C
Permissible humidity (operation)	10 % ... 95 % (non-condensing)
Permissible humidity (storage/transport)	10 % ... 95 % (non-condensing)
Air pressure (operation)	86 kPa ... 108 kPa (1500 m above sea level)
Air pressure (storage/transport)	66 kPa ... 108 kPa (3500 m above sea level)

Interfaces

Interface	Ethernet (RJ45)
No. of ports	8 (RJ45 ports)
Note on the connection method	Auto negotiation and autocrossing
Transmission physics	Copper
Transmission speed	10/100 Mbps
Transmission length	100 m (per segment)
Signal LEDs	Data receive, link status

Function

Basic functions	Store-and-forward switch, complies with IEEE 802.3
Configuration memory	max. 8 GByte (SD card)
Management	Web-based management (HTTP/HTTPS)
	SNMPv1/v2/v3
Diagnostic functions	Remanente Event-Table
	RMON History
	N:1-Portmirroring
	LLDP (Link Layer Discovery Protocol)
	SNMP-Traps
	ACD (Address Conflict Detection)
Filter functions	Quality of Service (8 priority classes)
	Port-Priorisierung
	VLAN (up to 32 VLANs)
	IGMP Snooping/Querier (v1/v2)
	Auto-Query-Port
	Extended Multicast Filtering

Industrial Ethernet Switch - FL SWITCH 7008-EIP - 2701418

Technical data

Function

	Static Multicast Filtering (32 groups)
	Link Aggregation (up to 4 trunks)
Redundancy	DLR (Device Level Ring)
	RSTP (Rapid Spanning Tree Protocol)
	FRD (Fast Ring Detection)
	Large Tree Support
Additional functions	MAC-based Port Security
MAC address table	16k
IP parameterization	DHCP-Client
	DHCP Option 82 (Relay Agent)
	DHCP server (pool-based, port-based)
	BootP
PROFINET device function	Fast Startup
PROFINET conformance class	Conformance-Class A
EtherNet/IP™ supported protocols	Common Industrial Protocol (CIP)
Time synchronization	PTP 1588 (Transparent clock on the DLR ports)
Status and diagnostic indicators	LEDs: US1, US2 (power supply), Fail (alarm contact), 2 LEDs per Ethernet port (Link and switchable Activity/Speed/Duplex) EtherNet/IP™ status LED: Net, Mod
Signal contact control voltage	24 V DC (typical)
Signal contact control current	1 A (maximum)

Network expansion parameters

Cascading depth	Network, linear, and star structure: any
Maximum conductor length (twisted pair)	100 m

Supply voltage

Supply voltage	24 V DC (redundant)
Residual ripple	3.6 V_{PP} (within the permitted voltage range)
Supply voltage range	12 V DC ... 58 V DC
Typical current consumption	350 mA (at U_S = 24 V DC)
Current consumption	350 mA

General

Mounting type	DIN rail
Type AX	Book type
Net weight	900 g
Special properties	EtherNet/IP™
MTTF	209.8 Years (SN 29500 standard, temperature 25°C, operating cycle 21%)

Industrial Ethernet Switch - FL SWITCH 7008-EIP - 2701418

Technical data

General

	105.79 Years (SN 29500 standard, temperature 40°C, operating cycle 34.25%)
	14.78 Years (SN 29500 standard, temperature 70°C, operating cycle 100%)

Connection data

Connection method	Screw connection
Conductor cross section solid min.	0.2 mm²
Conductor cross section solid max.	2.5 mm²
Conductor cross section flexible min.	0.2 mm²
Conductor cross section flexible max.	2.5 mm²
Conductor cross section AWG min.	24
Conductor cross section AWG max.	12
Stripping length	7 mm

Standards and Regulations

Electromagnetic compatibility	Conformance with EMC Directive 2004/108/EC
Type of test	Vibration resistance in acc. with EN 60068-2-6/IEC 60068-2-6
Test result	Operation/Storage/Transport: 5g, 150 Hz, Criterion 3
Noise emission	EN 61000-6-4
Noise immunity	EN 61000-6-2:2005
Vibration (storage/transport)	5g, 150 Hz, in acc. with IEC 60068-2-6
Free from substances that could impair the application of coating	Yes
Vibration (operation)	in acc. with IEC 60068-2-6: 5g, 150 Hz
Noxious gas test	ISA S71.04.2013 G3 Harsh Group A

Environmental Product Compliance

REACh SVHC	Lead 7439-92-1
China RoHS	Environmentally Friendly Use Period = 50 years
	For details about hazardous substances go to tab “Downloads”, Category “Manufacturer's declaration”

Drawings

Industrial Ethernet Switch - FL SWITCH 7008-EIP - 2701418

Schematic diagram

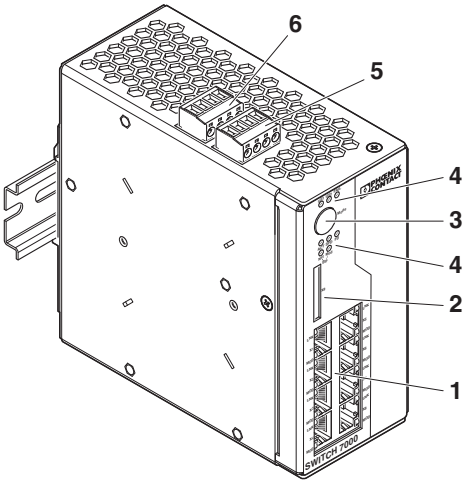

Schematic diagram

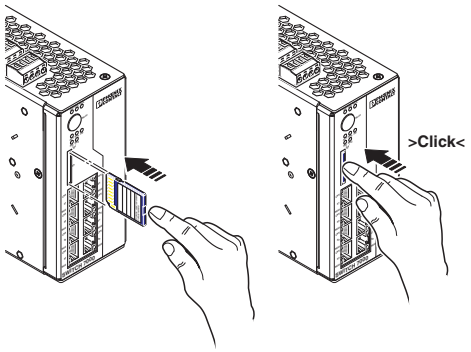

Inserting/removing the SD card

Key:
1 Ethernet ports
2 Slot for optional SD memory card
3 Mode switch with LEDs
4 Diagnostics and status indicators
5 Connection of the supply voltage
6 Floating signal contact

Classifications

eCl@ss

eCl@ss 10.0.1	19170401
eCl@ss 11.0	19170401
eCl@ss 4.0	27250500
eCl@ss 4.1	27250500
eCl@ss 5.0	19030100
eCl@ss 5.1	19030100
eCl@ss 6.0	19170100
eCl@ss 7.0	19170106
eCl@ss 8.0	19170106
eCl@ss 9.0	19170106

ETIM

ETIM 3.0	EC000734
ETIM 4.0	EC000734
ETIM 5.0	EC000734
ETIM 6.0	EC000734

Industrial Ethernet Switch - FL SWITCH 7008-EIP - 2701418

Classifications

ETIM

ETIM 7.0	EC000734

UNSPSC

UNSPSC 6.01	43172015
UNSPSC 7.0901	43201404
UNSPSC 11	43172015
UNSPSC 12.01	43201410
UNSPSC 13.2	43222612
UNSPSC 18.0	43222612
UNSPSC 19.0	43222612
UNSPSC 20.0	43222612
UNSPSC 21.0	43222612

Approvals

Approvals

Approvals

EtherNet/IP CONFORMANCE TESTED TM / UL Listed / cUL Listed / cULus Listed

Ex Approvals

UL Listed / cUL Listed / cULus Listed

Approval details

EtherNet/IP CONFORMANCE TESTED TM	11221.01

UL Listed		http://database.ul.com/cgi-bin/XYV/template/LISEXT/1FRAME/index.htm	FILE E 140324

cUL Listed		http://database.ul.com/cgi-bin/XYV/template/LISEXT/1FRAME/index.htm	FILE E 140324

Industrial Ethernet Switch - FL SWITCH 7008-EIP - 2701418

Approvals

cULus Listed

Phoenix Contact 2020 © - all rights reserved
http://www.phoenixcontact.com



FL SWITCH 7000

User manual

Order No. —

PHOENIX CONTACT
INSPIRING INNOVATIONS

User manual
FL SWITCH 7000

2017-11-08

Designation: UM EN FL SWITCH 7000

Revision: 04

Order No.: —

This user manual is valid for:

Designation	Revision	Order No.
FL SWITCH 7008-EIP		2701418
FL SWITCH 7006/2FX-EIP		2701419
FL SWITCH 7005/FX-2FXSM-EIP		2701420
FL SWITCH 7004-4GC-EIP		2701553
FL SWITCH 7006-2GC-EIP		2701554
FL SWITCH 7004-2TC-2GC-EIP		2702175

Please observe the following notes

User group of this manual

The use of products described in this manual is oriented exclusively to:

– Qualified electricians or persons instructed by them, who are familiar with applicable standards and other regulations regarding electrical engineering and, in particular, the relevant safety concepts.
– Qualified application programmers and software engineers, who are familiar with the safety concepts of automation technology and applicable standards.

Explanation of symbols used and signal words



This is the safety alert symbol. It is used to alert you to potential personal injury hazards. Obey all safety measures that follow this symbol to avoid possible injury or death.

There are three different categories of personal injury that are indicated with a signal word.

DANGER This indicates a hazardous situation which, if not avoided, will result in death or serious injury.

WARNING This indicates a hazardous situation which, if not avoided, could result in death or serious injury.

CAUTION This indicates a hazardous situation which, if not avoided, could result in minor or moderate injury.



This symbol together with the signal word **NOTE** and the accompanying text alert the reader to a situation which may cause damage or malfunction to the device, hardware/software, or surrounding property.



This symbol and the accompanying text provide the reader with additional information or refer to detailed sources of information.

How to contact us

Internet

Up-to-date information on Phoenix Contact products and our Terms and Conditions can be found on the Internet at:
phoenixcontact.com

Make sure you always use the latest documentation.
It can be downloaded at:
phoenixcontact.net/products

Subsidiaries

If there are any problems that cannot be solved using the documentation, please contact your Phoenix Contact subsidiary.
Subsidiary contact information is available at phoenixcontact.com.

Published by

PHOENIX CONTACT GmbH & Co. KG
Flachsmarktstraße 8
32825 Blomberg
GERMANY

Should you have any suggestions or recommendations for improvement of the contents and layout of our manuals, please send your comments to:
tecdoc@phoenixcontact.com

General terms and conditions of use for technical documentation

Phoenix Contact reserves the right to alter, correct, and/or improve the technical documentation and the products described in the technical documentation at its own discretion and without giving prior notice, insofar as this is reasonable for the user. The same applies to any technical changes that serve the purpose of technical progress.

The receipt of technical documentation (in particular user documentation) does not constitute any further duty on the part of Phoenix Contact to furnish information on modifications to products and/or technical documentation. You are responsible to verify the suitability and intended use of the products in your specific application, in particular with regard to observing the applicable standards and regulations. All information made available in the technical data is supplied without any accompanying guarantee, whether expressly mentioned, implied or tacitly assumed.

In general, the provisions of the current standard Terms and Conditions of Phoenix Contact apply exclusively, in particular as concerns any warranty liability.

This manual, including all illustrations contained herein, is copyright protected. Any changes to the contents or the publication of extracts of this document is prohibited.

Phoenix Contact reserves the right to register its own intellectual property rights for the product identifications of Phoenix Contact products that are used here. Registration of such intellectual property rights by third parties is prohibited.

Other product identifications may be afforded legal protection, even where they may not be indicated as such.

Table of contents

1 Factoryline SWITCH 7000 range 7

1.1 Properties and versions 7
1.1.1 Dimensions of the FL SWITCH 7000 7
1.1.2 Elements of the Fast Ethernet devices 8
1.1.3 Elements of the Gigabit devices 9
1.1.4 Description of the combo ports 9
1.1.5 Status and diagnostics indicators 11

2 Mounting and installation 13

2.1 Mounting and removing the devices 13
2.2 Installing the devices 14
2.2.1 Connecting the supply voltage 14
2.2.2 Grounding 16
2.2.3 Floating signal contacts 16
2.2.4 Assignment of the RJ45 Ethernet connectors 17
2.2.5 Use of SFP slots (principle) 17
2.2.6 Using the SD card 18

3 Startup and function 19

3.1 Delivery state / factory settings 19
3.2 Using Smart mode 19
3.2.1 Calling Smart mode 19
3.2.2 Selecting the desired setting 20
3.2.3 Possible operating modes in Smart mode 20
3.2.4 Exiting Smart mode 20
3.3 Assigning IP parameters via BootP 20
3.3.1 Assigning the IP address using FL NETWORK MANAGER Basic 21
3.3.2 Assigning the IP address using IPAssign.exe 23
3.4 Operating with a default IP address 25

4 Frame switching 27

4.1 Store and forward 27
4.2 Multi-address function 27
4.2.1 Learning addresses 27
4.2.2 Prioritization 28

5 Configuration and diagnostics in web-based management 29

5.1 Requirements for the use of WBM 29
5.2 Functions/information in WBM 30
5.2.1 Information area of WBM 31
5.2.2 Configuration area of WBM 35
5.2.3 Diagnostics area of WBM 59

6 Simple Network Management Protocol (SNMP) 67
6.1 General function 67
6.2 Tree structure of the MIB 70

7 Device Level Ring - DLR 73

8 Common Industrial Protocol (CIP) 77
8.1 Supported EtherNet/IP™ objects 78
8.1.1 Identity object (class code 01) 78
8.1.2 Message Router object (class code 02) 79
8.1.3 Connection Manager object (class code 06) 80
8.1.4 TCP/IP Interface object (class code F5) 81
8.1.5 Ethernet Link object (class code F6) 83
8.1.6 Device Level Ring (DLR) object (class code 47) 84
8.1.7 Simple Network Management (SNMP) object (class code 0x52) 86
8.1.8 QoS object (class code 48) 87
8.1.9 Base Switch object (class code 51) 88
8.1.10 Assembly object 89
8.1.11 Input Assemblies 89
8.1.12 Output Assemblies 92
8.1.13 Configuration Assemblies 93
8.1.14 Power source and link status assembly 96

9 Multicast Filtering 97
9.1 Multicast Configuration 97

10 Virtual Local Area Network - VLAN 101

11 Technical data and ordering data 105
11.1 Technical data 105
11.2 Ordering data 109

A Appendix for document lists 111
A 1 List of figures 111
B 1 List of tables 115
C 1 Index 117

1 Factoryline SWITCH 7000 range

1.1 Properties and versions

The Managed Switch from the 7000 series is an Ethernet switch which is suitable for industrial use. It is available in the following versions:

– With eight 10/100 Mbps RJ45 ports (FL SWITCH 7008-EIP)
– With six 10/100 Mbps RJ45 ports and two 10/100 Mbps FO ports in SC format for multimode (FL SWITCH 7006/2FX-EIP)
– With five 10/100 Mbps RJ45 ports, one 10/100 Mbps FO port in SC format for multimode, and two 10/100 Mbps FO ports in SC format for single mode (FL SWITCH 7005/FX-2FXSM-EIP)
– With four 10/100 Mbps RJ45 ports and four Gigabit combo ports (FL SWITCH 7004-4GC-EIP)
– With six 10/100 Mbps RJ45 ports and two Gigabit combo ports (FL SWITCH 7006-2GC-EIP)
– With four 10/100 Mbps RJ45 ports, two Fast Ethernet combo ports, and two Gigabit combo ports (FL SWITCH 7004-2TC-2GC-EIP)

The combo ports can either be used as RJ45 ports or as SFP ports (see “Description of the combo ports” on page 9).

1.1.1 Dimensions of the FL SWITCH 7000

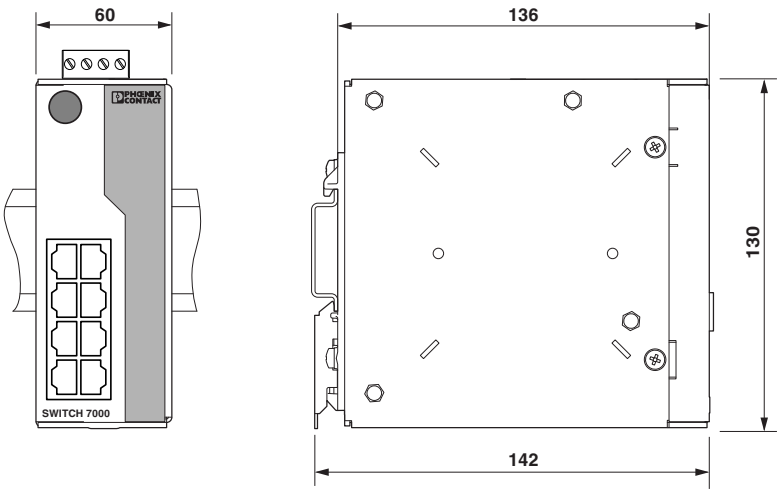

Figure 1-1 Housing dimensions

1.1.2 Elements of the Fast Ethernet devices



Figure 1-2 Elements of the Fast Ethernet devices

Number	Meaning
1	Multimode fiberglass ports
2	RJ45 ports
3	Slot for optional SD card
4	Diagnostic and status indicators
5	Mode switch with LEDs
6	Diagnostic and status indicators
7	Connection for the supply voltage
8	Connection for the floating signal contacts
9	Multimode fiberglass port
10	Single-mode fiberglass ports

1.1.3 Elements of the Gigabit devices



Figure 1-3 Elements of the Gigabit devices

Number	Meaning
1	SFP ports (see “Description of the combo ports” on page 9)
2	RJ45 ports (see “Description of the combo ports” on page 9)
3	Slot for optional SD card
4	Diagnostic and status indicators
5	Mode switch with LEDs
6	Diagnostic and status indicators
7	Connection for the supply voltage
8	Connection for the floating signal contacts

1.1.4 Description of the combo ports

Combo ports enable a high degree of flexibility when setting up networks. They consist of a corresponding RJ45 port (e.g., X5.1) and a corresponding SFP port (e.g., X5.2). Only one port of the pair can be used at a time. Each combo port can therefore be used as a copper

or fiberglass port. Inserting an SFP module disables the corresponding RJ45 port. If a combo port is used as a fiberglass port, the Link LED of the corresponding RJ45 port lights up orange when there is an active connection.

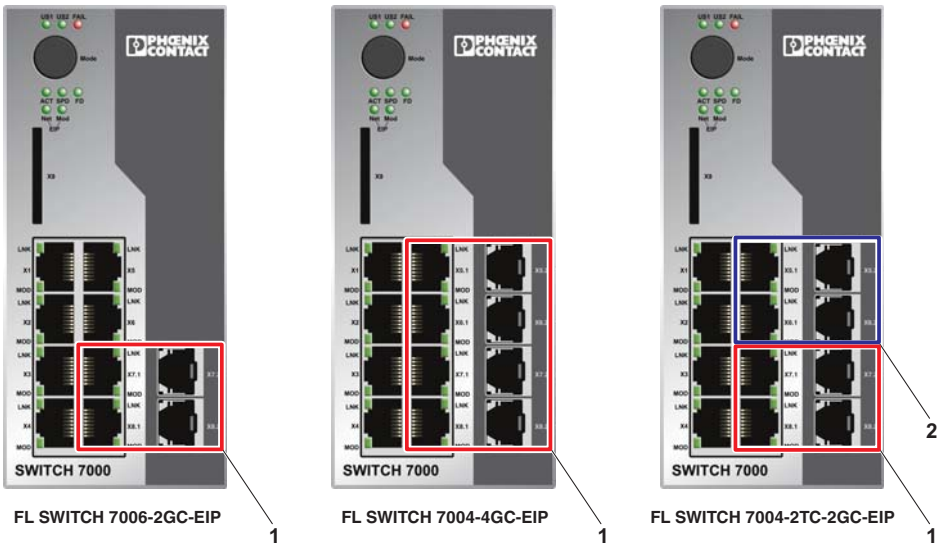

Figure 1-4 Device versions with combo ports

Number	Meaning
1	Gigabit combo ports
2	Fast Ethernet combo ports

1.1.5 Status and diagnostics indicators

Please note that the meaning of the LEDs differs in Smart mode (see “Using Smart mode” on page 19).

For versions with combo ports, the status of the SFP ports (e.g., X5.2) is indicated via the LEDs of the corresponding RJ45 port (e.g., X5.1).

Des.	Color	Status	Meaning
US1	Green	On	Supply voltage 1 within the tolerance range
		Off	Supply voltage 1 too low
US2	Green	On	Supply voltage 2 within the tolerance range
		Off	Supply voltage 2 too low
FAIL	Red	On	Signal contact open, i.e., an error has occurred
		Off	Signal contact closed, i.e., an error has not occurred
Each port has a Link LED located on the front of the device			
LNK (Link)	Green/ Orange	On	Green: link active (RJ45 port) Orange: link active (SFP port)
		Off	Link not active
Each port has an additional LED located on the front of the device. The function of the second LED (MOD) for each port can be set using the MODE button. There are three options (during the boot process the mode and port LEDs are permanently on):			
ACT (Activity)	Green	On	Transmitting/receiving telegrams
		Flashing	The device has no valid IP address
		Off	Not transmitting/receiving telegrams
SPD (Speed)	Green/ Orange	On	Green: 100 Mbps Orange: 1000 Mbps
		Off	10 Mbps if Link LED is active
FD (Duplex)	Green	On	Full duplex
		Off	Half duplex if Link LED is active
ACT/SPD/FD	Green	Flashing	Switch is in Smart mode (see “Using Smart mode” on page 19)
LEDs for EtherNet/IP™			
NET	Green/ Red	Off	Supply voltage not present or no IP parameters configured
		On (green)	CIP connection active
		Flashing (green)	IP parameters configured, no active CIP connection
		On (red)	The device has detected an IP address conflict
		Flashing (red)	An “Exclusive Owner” connection has run into a timeout
		Flashing (red/green)	The device is performing a “Power on Selftest - POST”

Des.	Color	Status	Meaning
MOD	Green/ Red	Off	Supply voltage not present
		On (green)	The device is operating correctly
		Flashing (green)	The device is not configured
		On (red)	The device has an irreversible error
		Flashing (red)	The device has a reversible error
		Flashing (red/green)	The device is performing a “Power on Selftest - POST”

2 Mounting and installation

2.1 Mounting and removing the devices

Mount the device on a clean DIN rail according to DIN EN 50022 (e.g., NS 35 ... from Phoenix Contact). To avoid contact resistance, only use clean, corrosion-free DIN rails. End brackets (E/NS 35 N, Order No. 0800886) can be mounted to the right and left of the device to stop the modules from slipping on the DIN rail.

Mounting:

- Place the module onto the DIN rail from above (A1). The upper holding keyway of the module must be hooked onto the top edge of the DIN rail. Push the module from the front towards the mounting surface (A2).

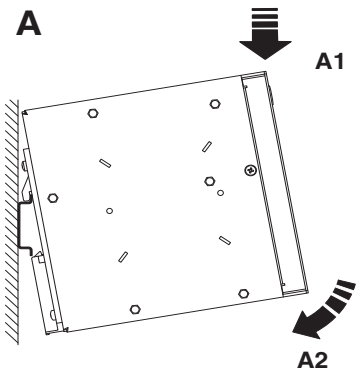

Figure 2-1 Snapping the device onto the DIN rail

- Once the module has been snapped on properly, check that it is fixed securely on the DIN rail.

Removal:

- Pull down the positive latch using a suitable tool (e.g., screwdriver). The positive latch remains snapped out. Then swivel the bottom of the device away from the DIN rail slightly (B1). Next, lift the device upwards away from the DIN rail (B2).

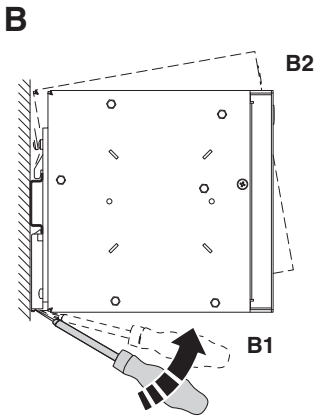

Figure 2-2 Removing the device

2.2 Installing the devices

2.2.1 Connecting the supply voltage

The device is operated using a 24 V DC voltage, which is applied via COMBICON. If required, the voltage can also be supplied redundantly (see Figure 2-4).

If redundant power supply monitoring is active (default setting), an error is indicated if only one voltage is applied. A bridge between US1 and US2 prevents this error message. It is possible to deactivate monitoring in web-based management or via SNMP.

Operation with one power supply

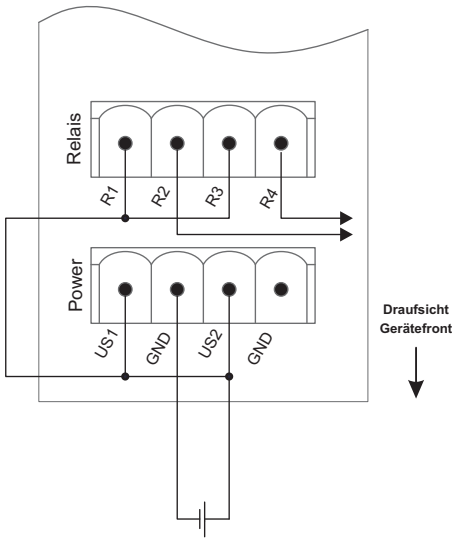

Figure 2-3 Operating the device with one power supply (example)

Redundant operation with two power supplies

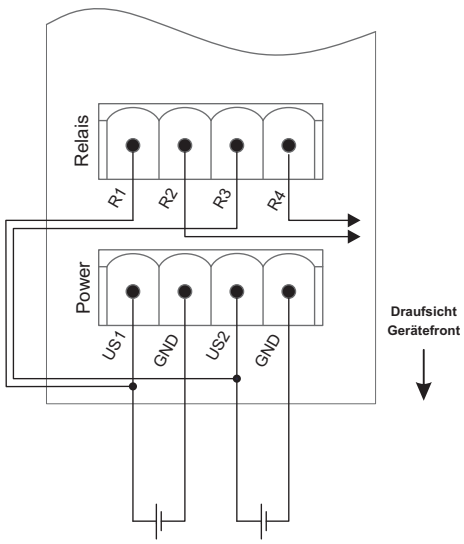

Figure 2-4 Redundant operation with two power supplies (example)

Please note that load distribution does not take place. The power supply unit with the higher voltage will supply the device on its own.

2.2.2 Grounding

Grounding protects people and machines against hazardous voltages. To avoid these dangers, as far as possible, correct grounding, taking the local conditions into account, is vital.

All Factoryline devices must be grounded so that any possible interference is shielded from the data telegram and discharged to ground potential. A conductor of at least 2.5 mm^2 must be used for grounding. Mount the module on a grounded DIN rail. The module is grounded by snapping it onto the DIN rail.

2.2.3 Floating signal contacts

Signal contact

The device has two floating signal contacts. An error is indicated when the contact is opened.

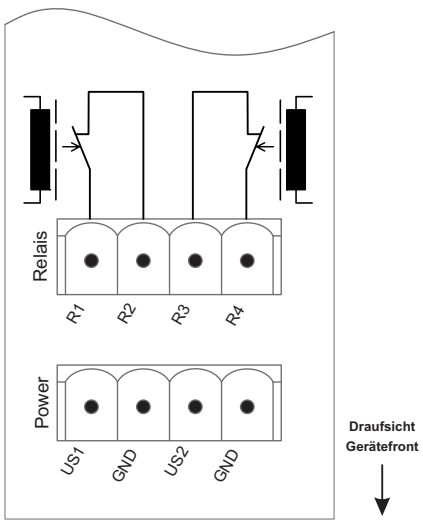

Figure 2-5 Basic circuit diagram for the signal contact

The indicated error states are configured in web-based management or via SNMP.

In the event of non-redundant voltage supply, the switch indicates the failure of a supply voltage by opening the signal contact. This error message can be prevented by connecting the supply voltage to both US1/US2 terminal blocks in parallel, as shown in Figure 2-3, or by deactivating redundant power supply monitoring in web-based management or via SNMP.

2.2.4 Assignment of the RJ45 Ethernet connectors

Please note that for operation with 1000 Mbps (Gigabit), cables with four twisted pairs (eight wires), which meet the requirements of CAT5e as a minimum, must be used.

Table 2-1 Pin assignment of RJ45 connectors

Pin number	10Base-T / 10 Mbps	100Base-T/100 Mbps	1000Base-T / 1000 Mbps
1	TD+ (transmit)	TD+ (transmit)	BI_DA+ (bidirectional)
2	TD- (transmit)	TD- (transmit)	BI_DA- (bidirectional)
3	RD+ (receive)	RD+ (receive)	BI_DB+ (bidirectional)
4	-	-	BI_DC+ (bidirectional)
5	-	-	BI_DC- (bidirectional)
6	RD- (receive)	RD- (receive)	BI_DB- (bidirectional)
7	-	-	BI_DD+ (bidirectional)
8	-	-	BI_DD- (bidirectional)

2.2.5 Use of SFP slots (principle)

The SFP slots are used by SFP modules (FO fiberglass modules in SFP format). By selecting the SFP modules, the user can specify whether the switch has multimode or single-mode FO ports, for example.

The SFP modules are available separately as accessories, see “Technical data” on page 105.

2.2.5.1 Elements of the SFP modules

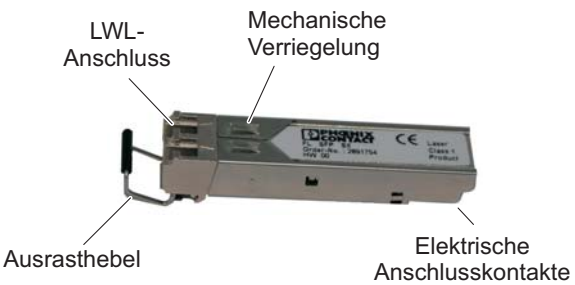

Figure 2-6 Elements of the SFP modules

2.2.5.2 Mounting the SFP modules

Inserting the SFP modules

- Insert the SFP modules in the relevant slots on the switch.

- Ensure correct mechanical alignment of the SFP modules.

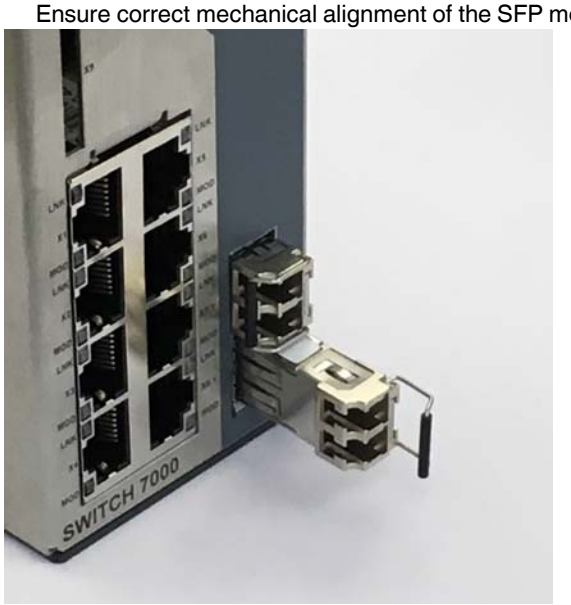

Figure 2-7 Inserting the SFP modules

Removing the SFP modules

- Remove the FO connector before removing the SFP module.
- Turn the release latch to the side and pull out the SFP module.

2.2.6 Using the SD card

The switch can optionally be configured quickly using a compatible SD card. To do so, the SD card must use the VFAT file system (standard with SD cards). SD and SDHC cards up to 8 GB max. are supported.

Please also observe that functionality of the SD card and the product can only be ensured with the use of a Phoenix Contact SD card (e.g., Order No. 2988162 // SD FLASH 2 GB). When using SD cards from other providers, it is recommended that card compatibility be verfied.

Using configuration files on the SD card

The configuration file used must be saved on the SD card under this path and file name:

FLConfig\config.cfg

Automatically reading the configuration on the SD card

To automatically read the configuration on the SD card, make sure that the card is inserted when the switch is started. As soon as the boot process is completed, as indicated by the ACT, SPD and FD LEDs no longer being on, the configuration has been incorporated into the switch's internal memory and is active in continous operation. The SD card can then be removed. The configuration also remains active when the switch is restarted, provided an SD card is not inserted in the device.

3 Startup and function

3.1 Delivery state / factory settings

By default upon delivery or after the system is reset to the factory settings, the following functions and properties are available:

- The user name is: REDACTED
- The password is: REDACTED
- All IP parameters are deleted. The switch has no valid IP address.
- The available RJ45 ports are set to auto negotiation and auto crossing
- All counters of the SNMP agent are reset
- The web server (HTTP) and SNMPv2 are activated
- Port Mirroring, Device Level Ring are deactivated
- Rapid Spanning Tree is activated
- The switch is in the “EtherNet/IP” mode.
- The alarm contacts open in the event of non-redundant power supply.
- BootP for assigning IP parameters is activated
- The MAC address table does not contain any entries
- LLDP is activated
- DHCP server is deactivated

3.2 Using Smart mode

Smart mode enables the user to change the operating mode of the switch, without having access to one of the management interfaces.

The following setting options can be selected via Smart mode:

- Activating Universal mode
- Resetting the IP configuration
- Activating EtherNet/IP mode (default setting)
- Operating with a static IP address

The Mode button is used to call/exit Smart mode and to select the desired setting. The three mode LEDs indicate the mode that is currently selected and will apply when exiting Smart mode.

3.2.1 Calling Smart mode

- Following the switch boot phase, as soon as the three mode LEDs **go out**, press and hold down the Mode button for more than five seconds. If Smart mode is active, the three LEDs (ACT, SPD, and FD) will flash.
- When Smart mode is started, the switch is initially in the “Exit without changes” state.

3.2.2 Selecting the desired setting

- To select the various settings, press the Mode button briefly and select the desired operating mode (see Table “Operating modes in Smart mode” on page 20).

3.2.3 Possible operating modes in Smart mode

The switch supports the selection of the following operating modes in Smart mode:

Table 3-1 Operating modes in Smart mode

Mode	ACT LED 1	SPD LED 2	FD LED 3
Exit Smart mode without changes	Off	Off	**On**
Setting Universal mode	Off	**On**	Off
Reset the IP configuration	**On**	**On**	**On**
Setting EtherNet/IP mode (default setting)	**On**	Off	Off
Operating with a default IP address	**On**	**On**	Off

3.2.4 Exiting Smart mode

- To exit, press and hold down the Mode button for at least five seconds. The previously selected operating mode is saved and activated.

3.3 Assigning IP parameters via BootP



BootP is activated by default.



In EtherNet/IP mode, the device still continues to send BootP requests, even after receipt of a valid IP address.

For IP address assignment, the device uses the BootP protocol. Numerous BootP servers are available on the Internet. You can use any of these programs for address assignment.

This section explains IP address assignment using the “FL NETWORK MANAGER Basic” (Order No. 2702889) and “IP Assignment Tool” software tools from Phoenix Contact.

Notes on BootP

During initial startup, the device sends BootP requests without interruption until it receives a valid IP address. As soon as it receives a valid IP address, the device stops sending BootP requests.

After a restart, the device sends three BootP requests and will only then accept the old IP address if there is no BootP response.

3.3.1 Assigning the IP address using FL NETWORK MANAGER Basic

Requirements

The device is connected to a PC with a Microsoft Windows operating system and the FL NETWORK MANAGER has been successfully installed.

Step 1: parameterizing the BootP server

- Open the FL NETWORK MANAGER software
- Open a new project in the software
- Under Tools → Options, select the BOOTP/DHCP SERVER menu item
- Configure the network interface on your PC to which the device is connected and select “BootP” mode. You can also adjust the subnet mask and configure a default gateway.
- Click “OK” to confirm the parameterization

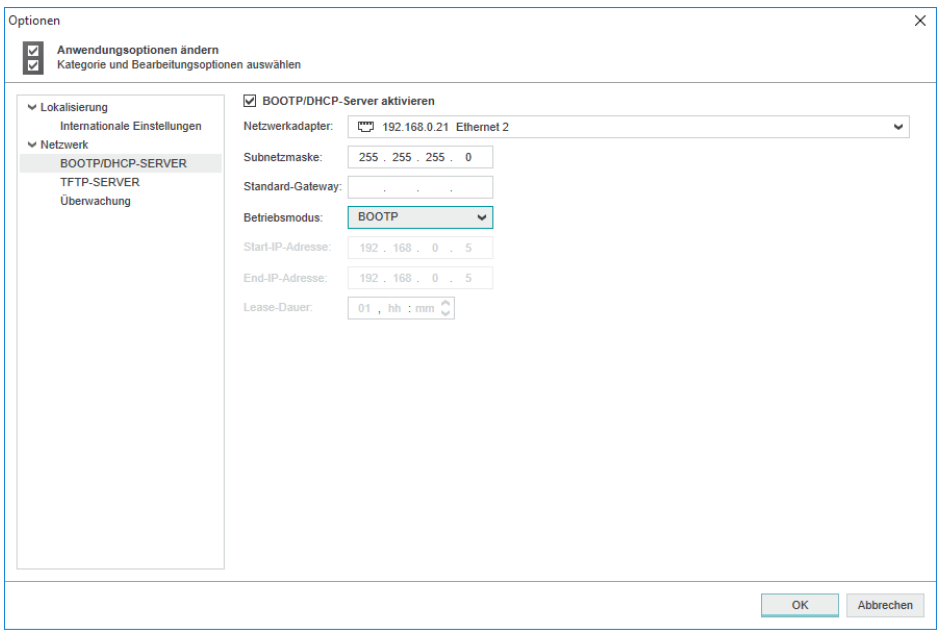

Figure 3-1 Settings for the BootP server

Step 2: starting the BootP server

- In your project in the BOOTP/DHCP SERVER window, click on the Play icon next to the selected network interface. The BootP server is now activated.

- BootP requests that are received are listed in the BOOTP/DHCP SERVER window in table format

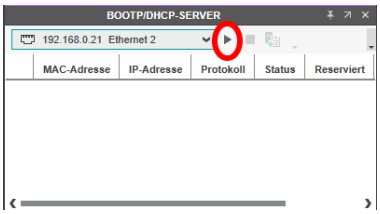

Figure 3-2 BootP server

Step 3: inserting incoming BootP requests in the reservation list and assigning IP parameters

- If you would now like to assign IP parameters to a device, such as an IP address, subnet mask or default gateway, right-click on an incoming BootP request in the BOOTP/DHCP SERVER window and select “Add to BOOTP/DHCP reservations”.
- Now enter the IP address to be assigned in the BOOTP/DHCP reservations window. The IP parameters are immediately transferred to the device.
- You can check whether IP address assignment was successful in the “IP address” column in the BOOTP/DHCP SERVER window.

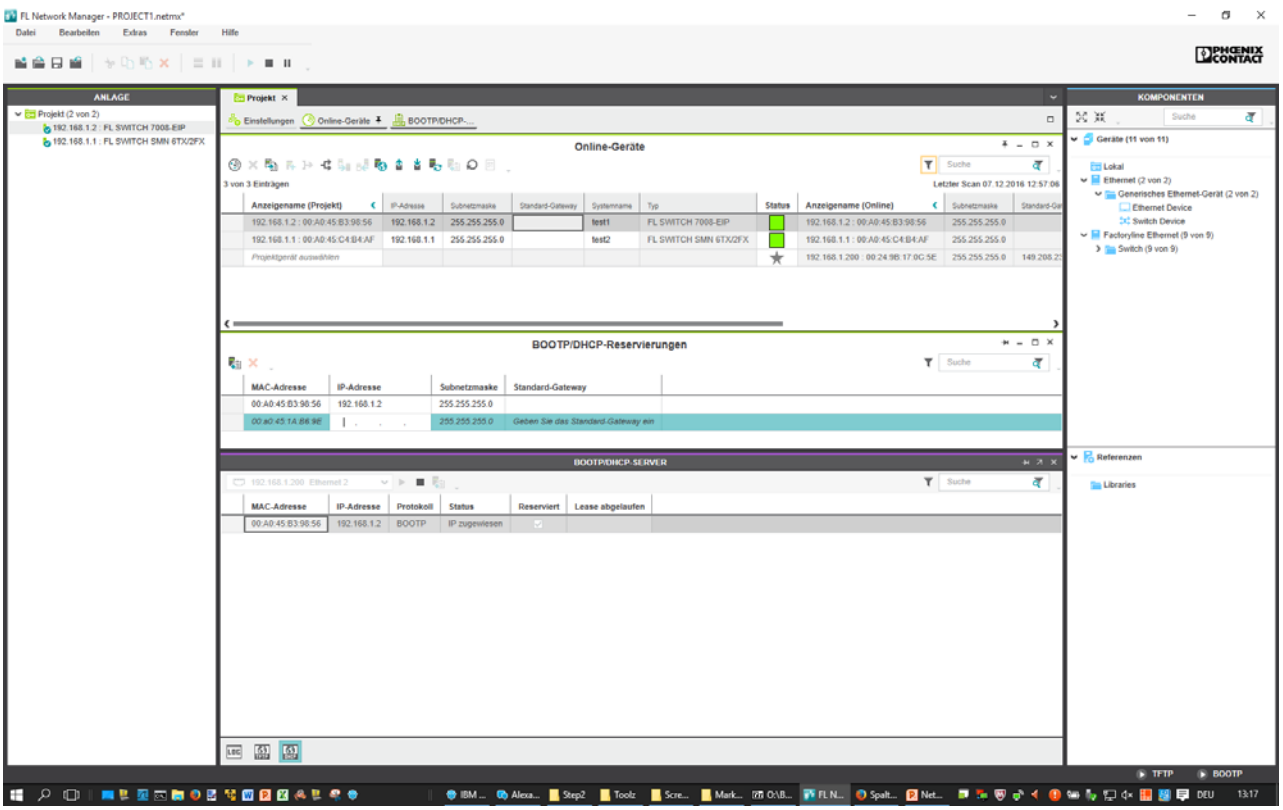

Figure 3-3 FL Network Manager with BootP/DHCP reservation list displayed

If required, the IP parameters set here can be changed in web-based management (see Unknown source of cross-reference).

3.3.2 Assigning the IP address using IPAssign.exe

Requirements

The device is connected to a computer with a Microsoft Windows operating system.

Step 1: downloading and executing the program

- On the Internet, select the link phoenixcontact.net/catalog.
- Follow further instructions in order to access the search field.
- Enter order number 2702323 in the search field, for example.

The BootP IP addressing tool can be found among the various product-related downloads.

- Double-click on the “IPAssign.exe” file.
- In the window that opens, click on the “Run” button.

Step 2: “IP Assignment Tool”

The program opens and the start screen of the addressing tool appears.

The program is mostly in English for international purposes. However, the program buttons change according to the country-specific settings.

The start screen displays the IP address of the PC. This helps when addressing the device in the following steps.

- Click on the “Next” button.

Step 3: “IP Address Request Listener”

All devices sending a BootP request are listed in the window which opens. These devices are waiting for a new IP address.

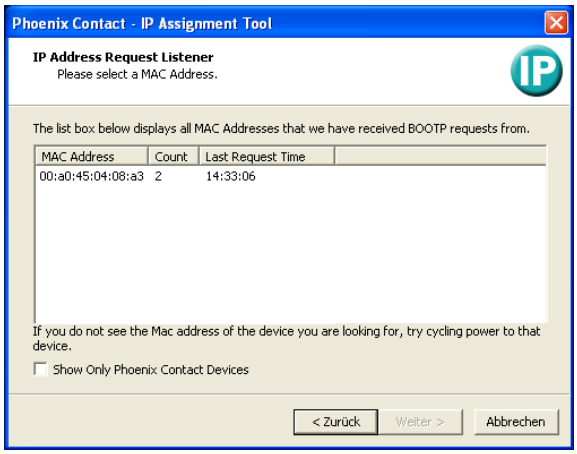

Figure 3-4 “IP Address Request Listener” window

The MAC address of the switch can be found on the sticker on the side.

In this example, the switch has MAC address 00.A0.45.04.08.A3.

- Select the device to which you want to assign an IP address.
- Click on the “Next” button.

Step 4: “Set IP Address”

The following information is displayed in the window which opens:

– IP address of the PC
– MAC address of the selected device
– IP parameters of the selected device
(IP address, subnet mask, and gateway address)
– Any incorrect settings

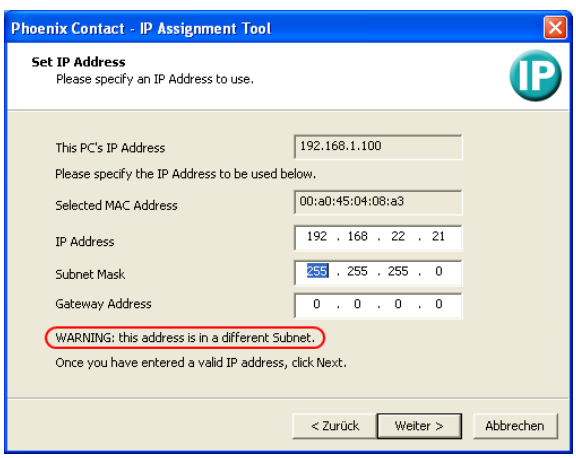

Figure 3-5 “Set IP Address” window with incorrect settings

- Adjust the IP parameters according to your requirements.

If inconsistencies are no longer detected, a message appears indicating that a valid IP address has been set.

- Click on the “Next” button.

Step 5: “Assign IP Address”

The program attempts to transmit the set IP parameters to the device.

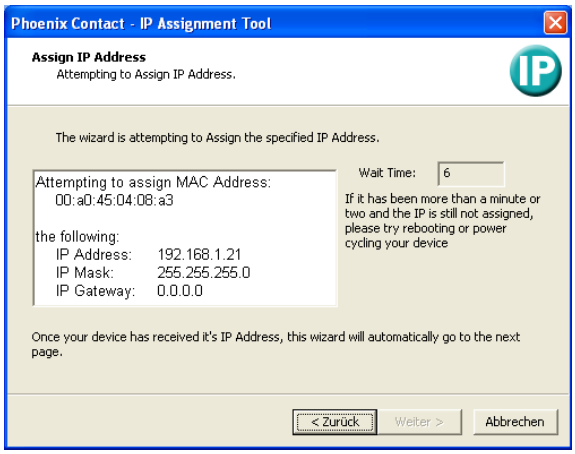

Figure 3-6 “Assign IP Address” window

Following successful transmission, the next window opens.

Step 6: completing IP address assignment

The window that opens informs you that IP address assignment has been successfully completed. It gives an overview of the IP parameters that have been transmitted to the device with the MAC address shown.

To assign IP parameters for additional devices:

- Click on the “Back” button.

To exit IP address assignment:

- Click on the “Finish” button.

If required, the IP parameters set here can be changed in web-based management (see Section “Network” on page 39).

3.4 Operating with a default IP address

For operation with a default IP address, the device receives a fixed IP address. A DHCP server is activated on the switch and assigns an IP address to the connected PC via DHCP.

To start up the device with a default IP address, activate the “Operating with a static IP address” Smart mode as described in “Using Smart mode” on page 19.

1. In the network settings on your PC, select the “Obtain an IP address automatically” option.



Deactivate all other network interfaces on your PC.

2. Connect the switch to your PC.
3. Select the “Operating with a default IP address” Smart mode as described in “Using Smart mode” on page 19.
4. The switch assigns an IP address to the PC via DHCP.
5. The switch can now be accessed via IP address “192.168.0.254”.

Set the desired IP address via web-based management.

4 Frame switching

The switch operates in store and forward mode. When receiving a data packet, the switch analyzes the source and destination addresses. The switch stores up to 16386 MAC addresses in its address table with an adjustable aging time of 10 to 825 seconds.

4.1 Store and forward

All data telegrams received by the switch are stored and checked for validity. Invalid or faulty data packets (> 1536 bytes or CRC errors) and fragments (< 64 bytes) are rejected. Valid data telegrams are forwarded by the switch.

4.2 Multi-address function

The switch learns all the source addresses for each port. Only packets with:

– Unknown source addresses
– A source address for this port or
– A multicast/broadcast address

in the destination address field are forwarded via the relevant port. The switch can learn up to 16386 addresses. This is important if more than one end device is connected to one or more ports. Several independent subnetworks can be connected to one switch.

4.2.1 Learning addresses

The switch independently learns the addresses for end devices, which are connected via this port, by evaluating the source addresses in the data telegrams. When the switch receives a data telegram, it forwards this data telegram to only that port that connects to the specified device (if the address could be learned beforehand).
The switch can learn up to 16386 addresses and store them in its table. The switch monitors the age of the learned addresses. The switch automatically deletes from its address table address entries that exceed a specific age (default: 40 seconds, adjustable from 10 to 825 seconds, aging time).



All learned entries are deleted on a restart.
A link down deletes all the entries of the affected port.



A list of detected MAC addresses can be found in the MAC address table. The MAC address table can be deleted via the “Clear” button.



The aging time is set using the “dot1dTpAgingTime” MIB object
(OID 1.3.6.1.2.1.17.4.2). The possible settings range is 10 - 825 seconds. For static configuration, an aging time of 300 seconds is recommended.

4.2.2 Prioritization

The switch supports eight priority queues (traffic classes according to IEEE 802.1Q) for adjusting the internal packet processing sequence. Data telegrams that are received are assigned to these classes according to their priority, which is specified in the VLAN/prioritization tag, where the value “0” in the tag indicates the lowest priority and the value “7” indicates the highest priority.

Processing rules

The switch controller in the device forwards received packets to the available receive queues according to the following decisions:

– BPDU packets are always assigned to the high-priority queue.
– Packets with VLAN/prioritization tag are forwarded according to the queues listed above.
– All remaining data is assigned to the low-priority queue.

4.2.2.1 Class of Service (CoS)

Class of Service refers to a mechanism used to take into consideration the value of the priority field (values 1 to 7) in VLAN data packets with a tag. The switch assigns the data streams in various processing queues, depending on the priority information contained in the CoS tag. The switch supports four internal processing queues.

4.2.2.2 Quality of Service (QoS)

Quality of Service affects the forwarding and handling of data streams and results in individual data streams being given differential treatment (usually preferential). QoS can be used, e.g., to guarantee a transmission bandwidth for individual data streams. The switch uses QoS in connection with prioritization.

5 Configuration and diagnostics in web-based management

The user-friendly web-based management (WBM) interface can be used to manage the switch from anywhere in the network using a standard browser (e.g., Internet Explorer 8/9). The configuration and diagnostic functions are clearly displayed on a graphical user interface. Every user with a network connection to the device has read/write access to that device via a browser. A wide range of information about the device itself, set parameters, and the operating state can be viewed.

Modifications to the device can only be made by entering the valid password. By default upon delivery, the user name is REDACTED and the password is REDACTED.

For security reasons, we recommend changing the existing password to a new one known only to you.

5.1 Requirements for the use of WBM

As the web server operates using the Hyper Text Transfer Protocol, a standard browser can be used. Access is via the URL “http://IP address of the device”. Example: “http://172.16.29.112”. If the web server is set to the secure HTTPS protocol in WBM, access is via the URL “http**s**://IP address of the device”. For full operation of the web pages, the browser must support JavaScript 1.2 and Cascading Style Sheets Level 1. We recommend the use of Microsoft Internet Explorer 8.0 or 9.0.

WBM can only be called using a valid IP address. By default upon delivery, the switch has no valid IP address (see “Assigning IP parameters via BootP” on page 20).

Device login is only possible if cookies are allowed in the browser settings.

Some functions are opened in pop-up windows. It is therefore only possible to use all of the functions if pop-ups are permitted in the browser settings.

In order to make changes, you must log into the device. To do so, click on the “Login” button.

By default upon delivery, the user name is REDACTED and the password is REDACTED.



Figure 5-1 Login window

5.2 Functions/information in WBM

WBM is split into the following areas:

– Information: general device information
– Configuration: device configuration
– Diagnostics: device-specific diagnostics

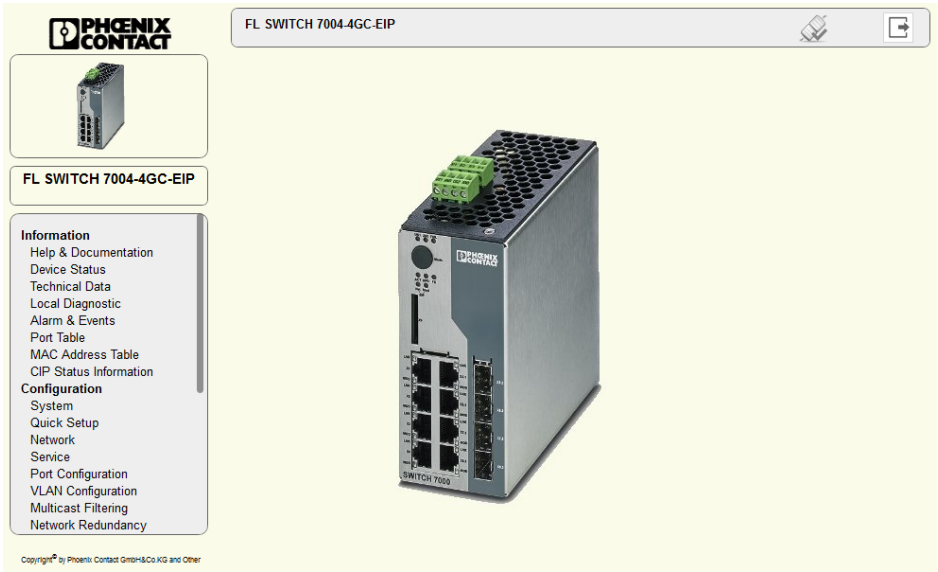

Figure 5-2 Start page for web-based management

5.2.1 Information area of WBM

5.2.1.1 Help & Documentation

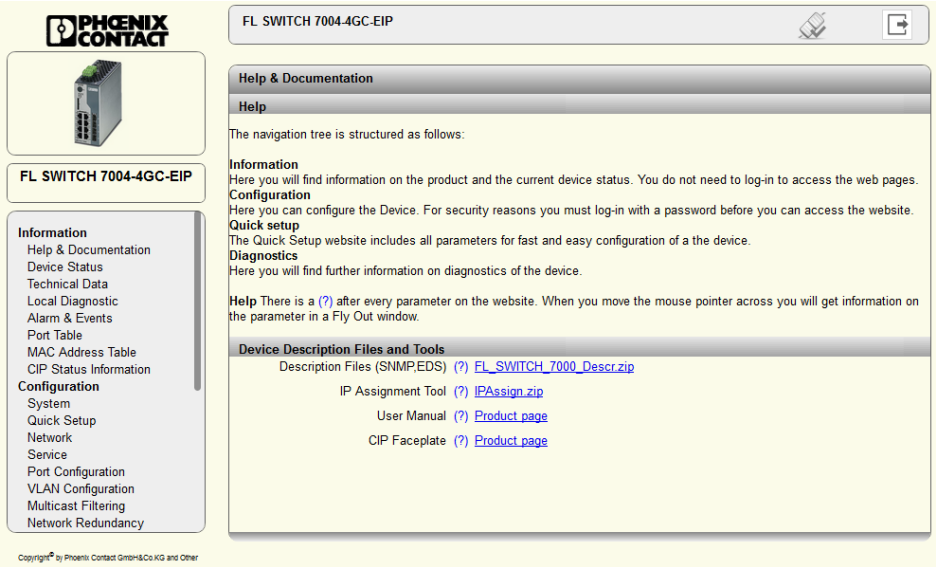

Figure 5-3 “Help & Documentation” web page

Here you will find useful information about using web-based management. On this page, the following files and software, which are supplied with the device, can be downloaded directly from the device:

– Description Files (SNMP, EDS)
– IP Assignment Tool (see Unknown source of cross-reference)

5.2.1.2 Device Status

Here you will find general information about your device, such as the serial number, firmware version or hardware version.

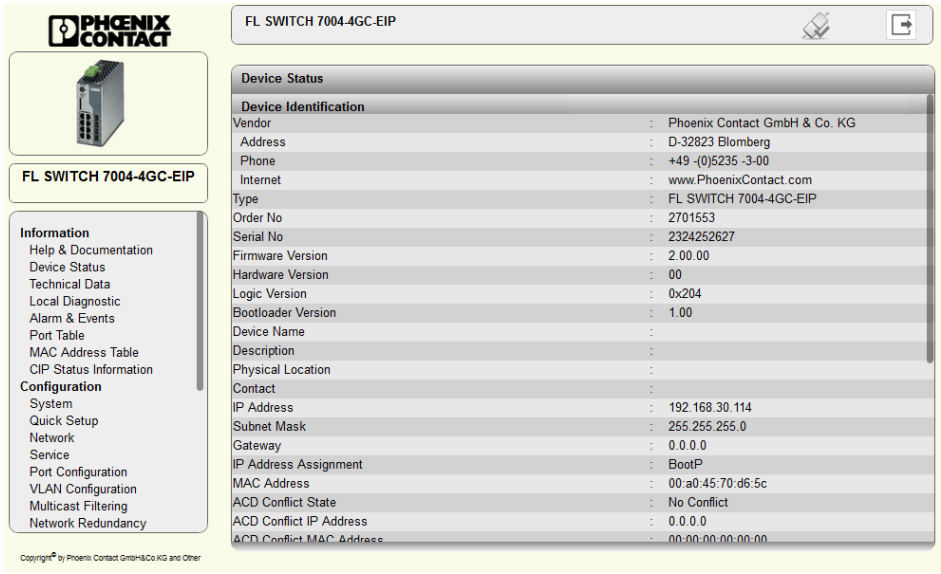

Figure 5-4 “Device Status” web page

5.2.1.3 Technical Data

Here you will find the technical data for your device, such as specifications for the power supply.

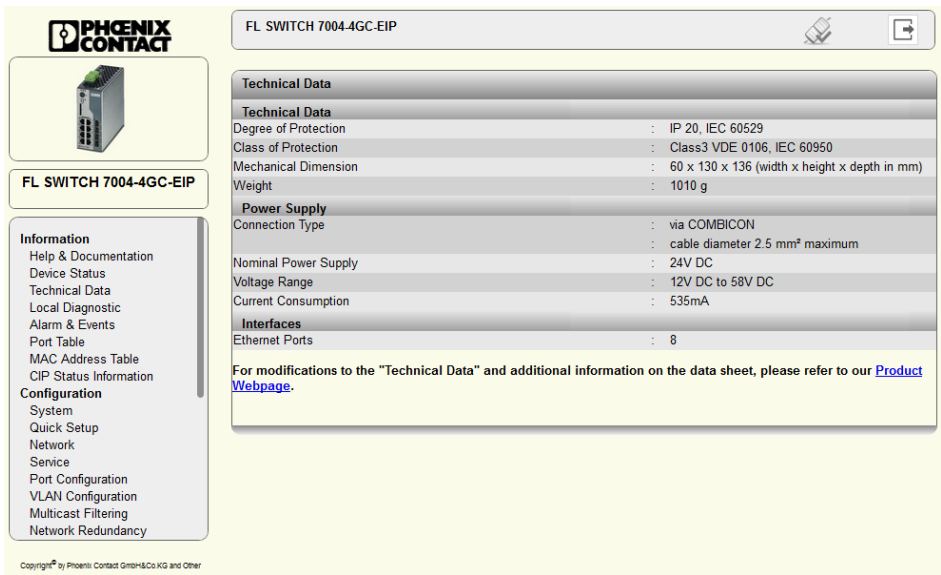

Figure 5-5 “Technical Data” web page

5.2.1.4 Local Diagnostics

Here you will find a brief explanation of how to interpret the individual LEDs on the device.

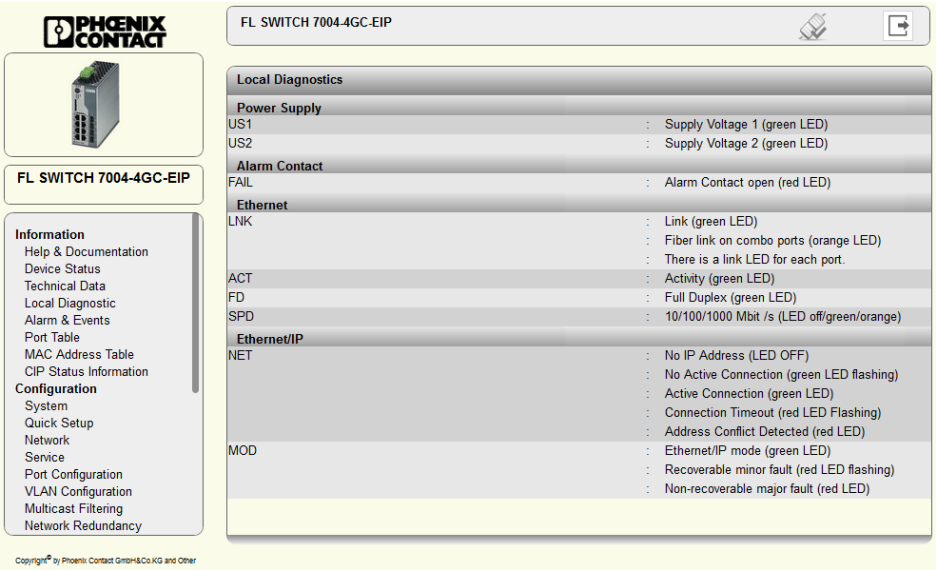

Figure 5-6 “Local Diagnostics” web page

5.2.1.5 Alarm & Events

You will find a list of alarms and events on this page. The entries in the “Event Table” are also retained after power up. The “Event Table” can be downloaded from the device in CSV format.

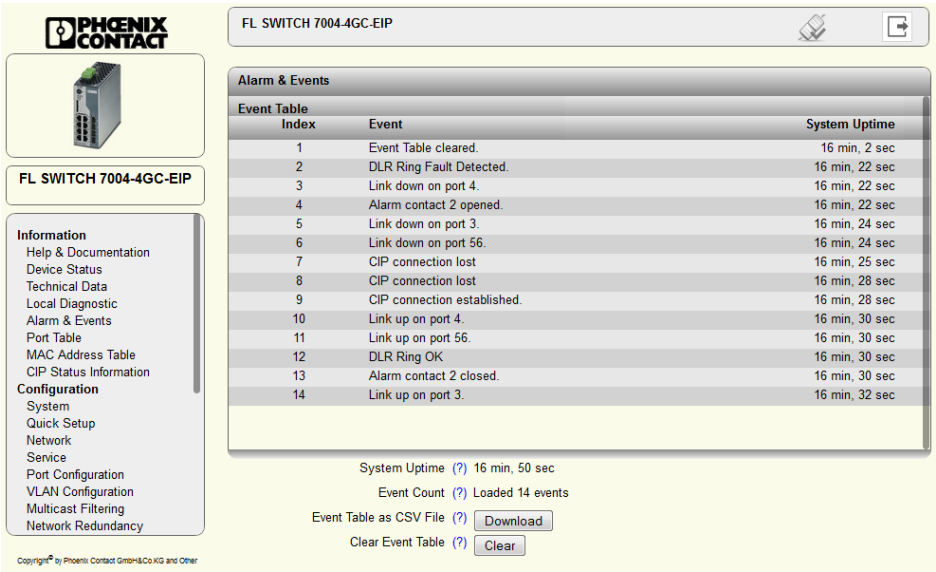

Figure 5-7 “Alarm & Events” web page

5.2.1.6 Port Table

You will find a list of the current states of the individual ports on this page.

Clicking on the “Redundancy Port Table” button opens a table with information on the individual ports and their redundancy mechanism assignment.

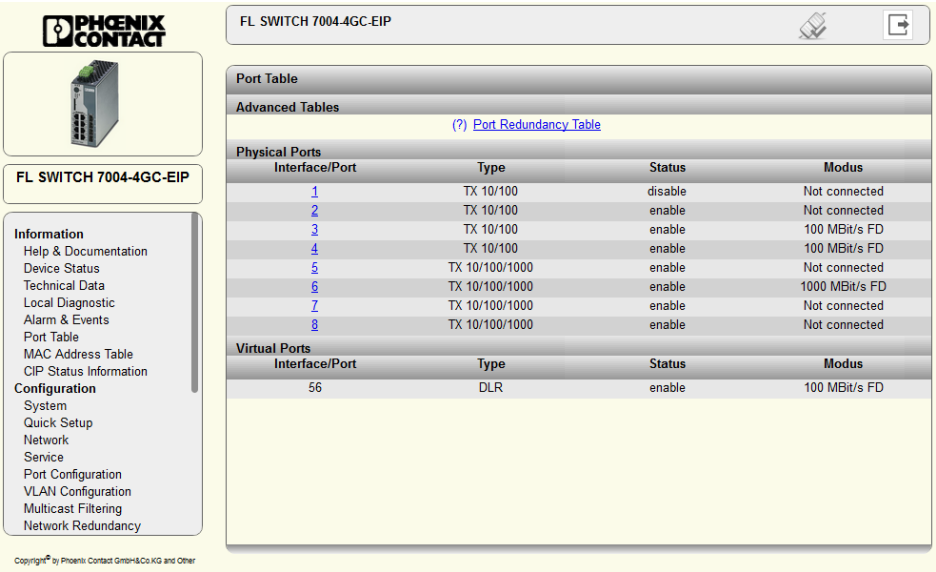

Figure 5-8 “Port Table” web page

5.2.1.7 MAC Address Table

You will find a list of the current devices in the network on this page. The list can be downloaded from the device in CSV format.

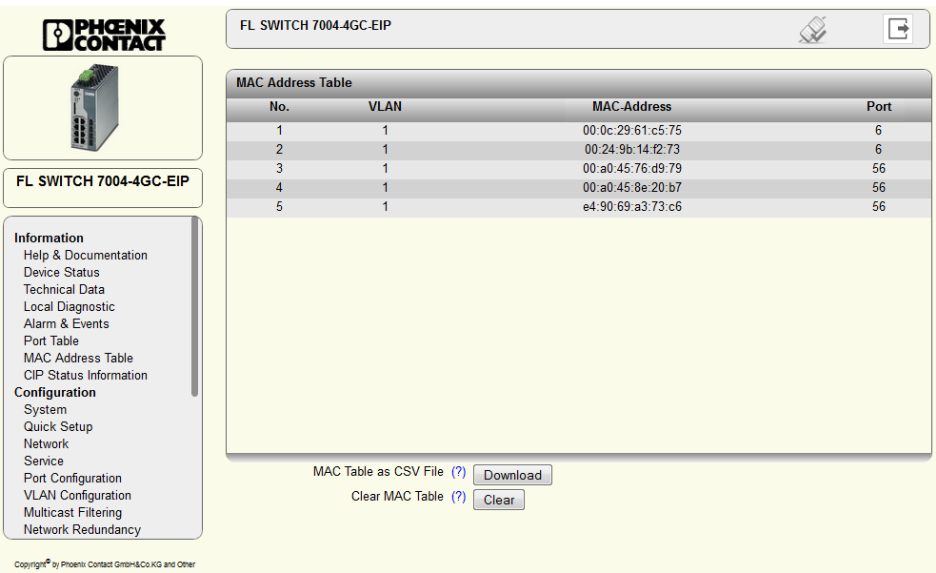

Figure 5-9 “MAC Address Table” web page

5.2.1.8 CIP Status Information

You will find the CIP status information listed on this page.

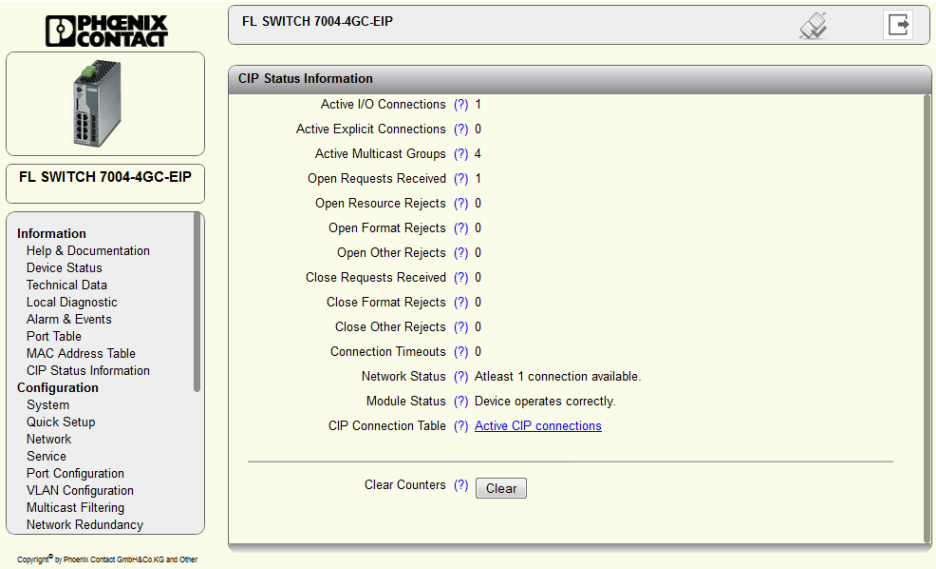

Figure 5-10 “CIP Status Information” web page

5.2.2 Configuration area of WBM

5.2.2.1 System

Reset Device: clicking on the “Reset” button restarts the device. All unsaved parameters will be lost.

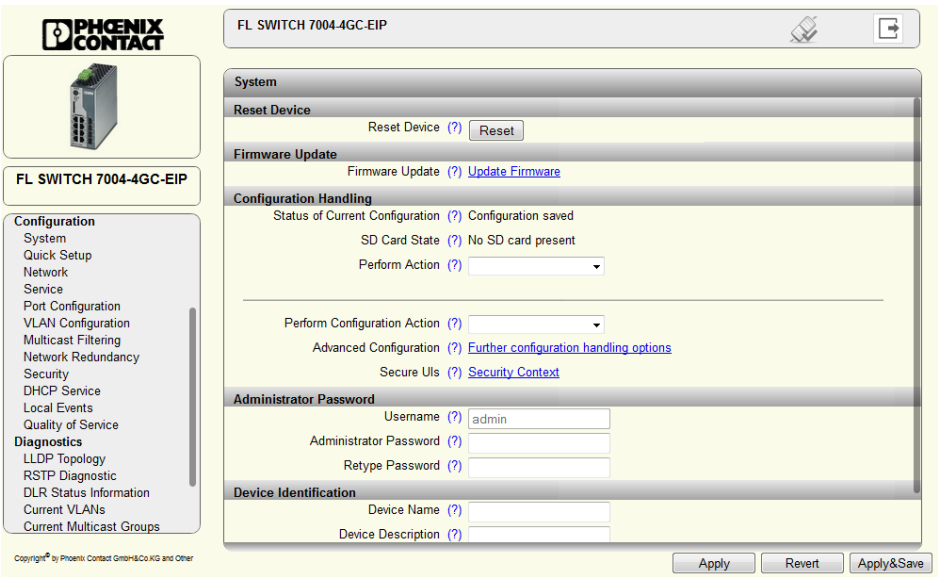

Figure 5-11 “System” web page

The connection to the device is interrupted for the boot phase.

Firmware Update

Clicking on the “Update Firmware” link opens a pop-up in which the parameters for the firmware update must be entered.

Pop-up: Update Firmware

Update via HTTP: select “HTTP” as the method. Clicking on “Browse” allows you to select the desired file on your PC. Clicking on “Apply” starts the update.

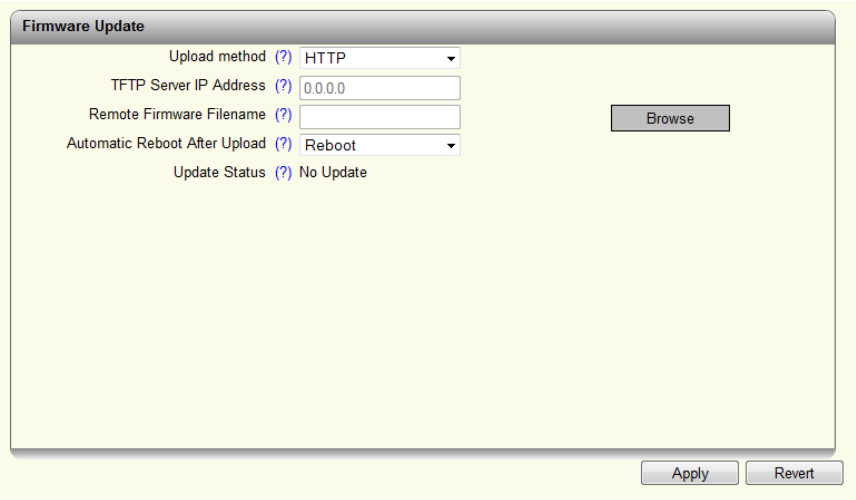

Figure 5-12 “Firmware Update via HTTP” pop-up

Update via TFTP: select “TFTP” as the method.

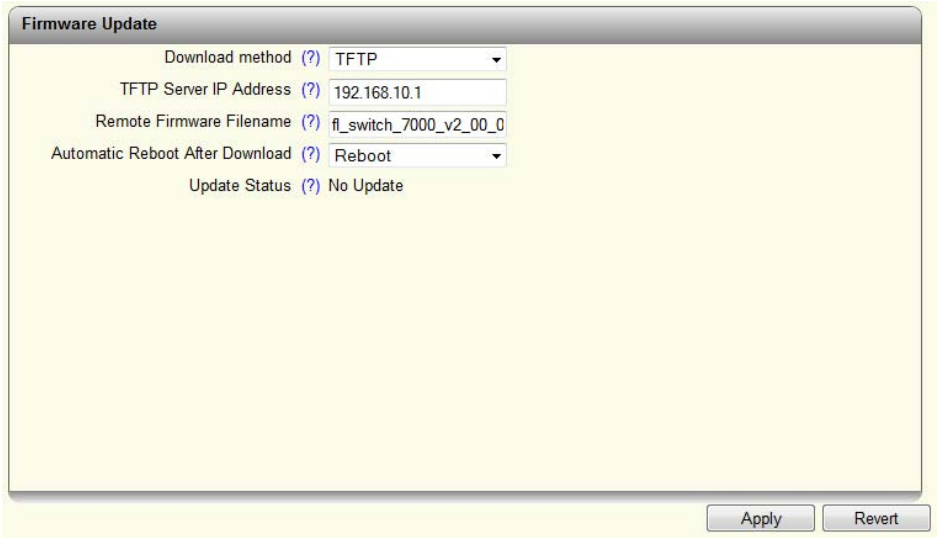

Figure 5-13 “Firmware Update via TFTP” pop-up

– TFTP server IP address:
  Here, set the IP address of the computer on which the TFTP server is active.
– Remote firmware filename:
  Here, set the name of the firmware file which is to be transferred to the device.
– Automatic reboot after upload:
  Here, set whether a reboot should be carried out after the firmware update. The firmware update starts as soon as you click on “Apply”.

Configuration Handling

Status of Current Configuration: indicates the status of the active configuration

SD Card State: indicates whether or not an SD card is inserted

This display can only be refreshed by reloading the web page.

Perform Action:

– Compare: compares the configuration file on the SD card with the one on the device.
– Clear: deletes the configuration file on the SD card.

The selected action is performed by clicking in the drop-down list.

Perform Configuration Action:

– Factory Default: resets the device configuration to the delivery state.
– Save Configuration: saves the active device configuration to the SD card.
– Reload Configuration: loads the configuration file from the SD card and applies it. The device is then restarted.

The selected action is performed by clicking in the drop-down list.

Advanced Configuration: clicking on the “Further configuration handling options” link opens a window in which the parameters for transferring a configuration file from the device to the PC (download) or from the PC to the device (upload) must be entered.

Secure UIs: clicking on the “Security Context” link opens the “Security Context” pop-up (see Page 39).

Pop-up: Advanced Configuration

File Type: select the file type here.

Direction: here you should select whether the configuration is to be uploaded to or downloaded from the device.

Update status: indicates the current transfer status.

Start transfer: click on the “Start” button to start the transfer of the configuration.

Configuration name: here you should enter the name under which you want to save the configuration on the PC.

Transfer via HTTP: select “HTTP” as the transfer method. Clicking on “Browse” allows you to select the desired file on your PC.

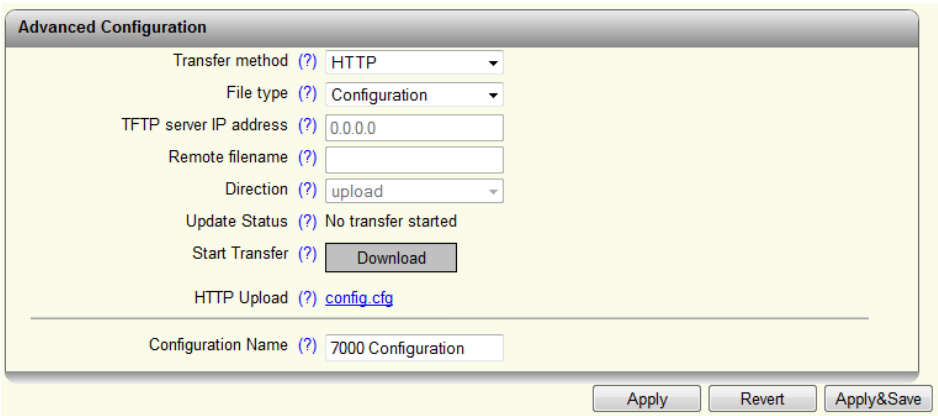

Figure 5-14 “Advanced Configuration” pop-up

Transfer via TFTP: select “TFTP” as the transfer method.

TFTP server IP address: here you should enter the IP address via which the TFTP server can be reached.

Remote filename: here you should enter the name of the file to be uploaded or downloaded.

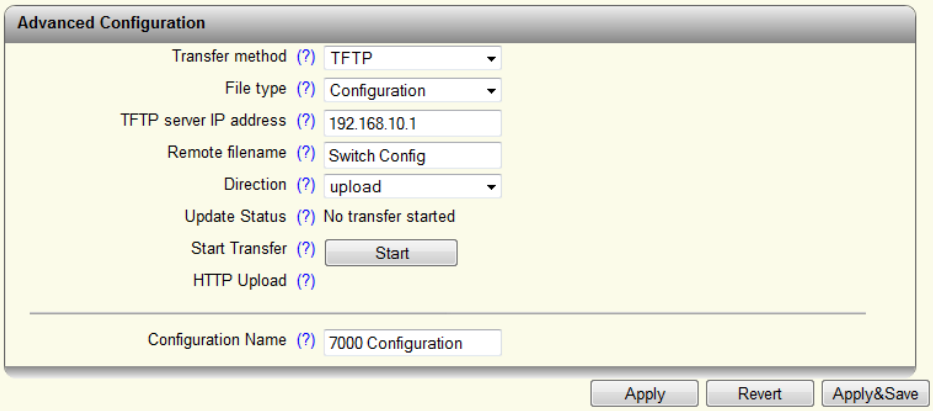

Figure 5-15 “Advanced Configuration” pop-up

Pop-up: Security Context

Create new context: clicking on the “Generate” button creates all the necessary keys and certificates for operation with HTTPS and SSH.

Current state: displays the status of the current availability of the security context.

Root CA: clicking on the “cacert.cer” link loads the Root CA certificate for the installation in the browser.

Advanced Configuration: clicking on the “File transfer” link opens the “Advanced Configuration” pop-up (see “Pop-up: Advanced Configuration” on page 38).

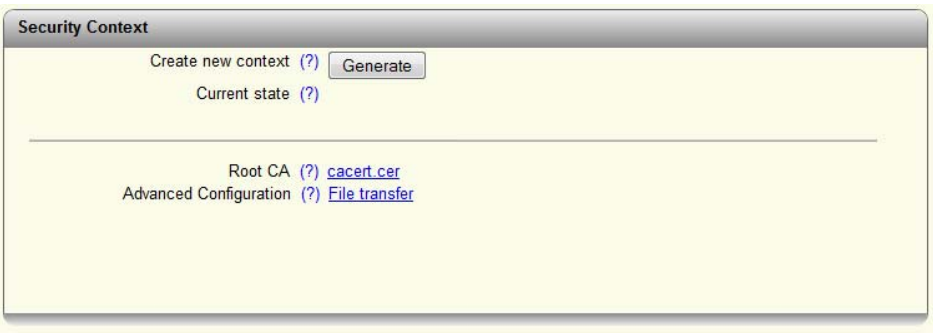

Figure 5-16 “Security Context” pop-up

Administrator Password



Figure 5-17 “Administrator Password” configuration area

You can change the administrator password here. The new password must be between 8 and 14 characters long. The new password will be activated after logout. By default upon delivery, the password is “private” (please note that it is case-sensitive). For security reasons, the input fields do not display your password, but instead “*******” is displayed.

Device Identification

Device information can be configured in this area, which is then displayed on the “Device Status” page.

Device Name: you can configure the device name here.

Device Description: you can enter a device description in this text field.

Physical Location: here you can provide the location of the device, such as the building in which it is installed.

Device Contact: you can enter a contact address in this field.

5.2.2.2 Quick Setup

The basic settings can be made in Quick Setup.

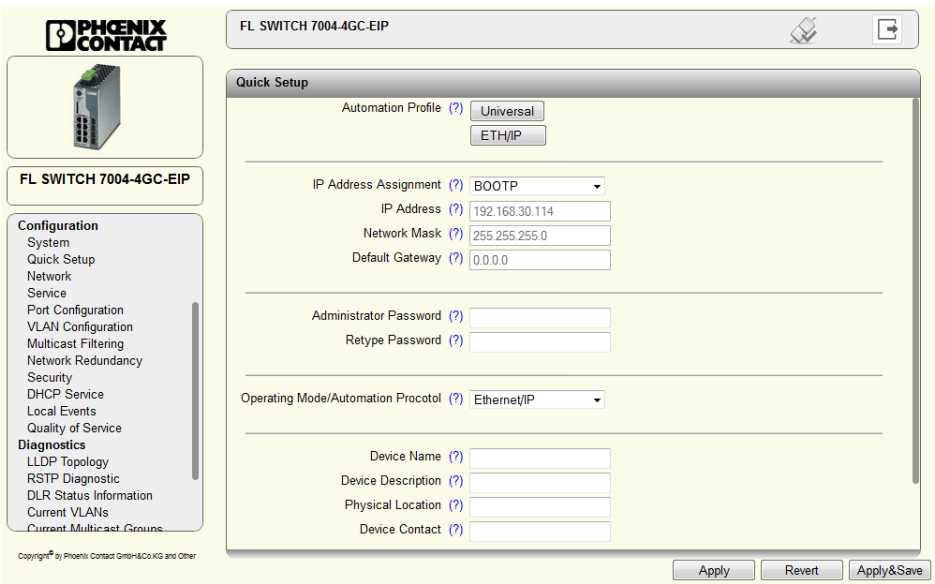

Figure 5-18 “Quick Setup” web page

Automation Profile: select a profile which is optimized for the desired operating mode.

– Universal: Standard mode
– ETH/IP: EtherNet/IP mode

IP Assignment: Select the type of IP address assignment.
– STATIC: static IP address
– BOOTP: assignment via the Bootstrap protocol
– DHCP: assignment via a DHCP server

IP address: set the desired IP address.

Network mask: set the desired subnet mask here.

Default gateway: set the desired default gateway here.

Administrator password: you can change the administrator password here.

Operation Mode/Automation Protocol: you can change the operating mode of the device here.
– None: The device operates without EtherNet/IP stack.
– EtherNet/IP: the EtherNet/IP stack is activated.

Device Name: you can enter the device name of the switch here.

Device Description: you can enter a description for the device here.

Physical Location: you can enter a location for the device here.

Device Contact: you can enter the name of a contact person for the device here.

LLDP Mode: you can enable or disable LLDP here.
– Disable: LLDP is deactivated
– Enable: LLDP is activated
– Send only: received LLDP BPDUs are ignored
– Receive only: no LLDP BPDUs are sent

The “LLDP Topology” link opens the corresponding page which can also be accessed via the menu item of the same name.

5.2.2.3 Network

The basic network settings are made here.

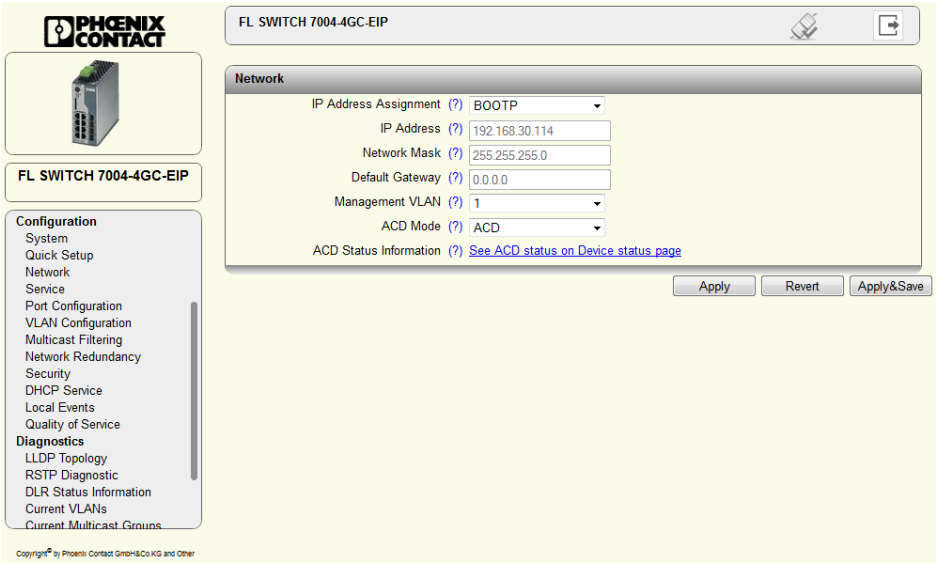

Figure 5-19 “Network” web page

IP Address Assignment: select the type of IP address assignment.

– STATIC: static IP address
– BOOTP: assignment via the Bootstrap protocol
– DHCP: assignment via a DHCP server

If you have chosen “STATIC”, now make the following settings:

IP Address: set the desired IP address.

Network Mask: set the desired subnet mask here.

Default Gateway: set the desired default gateway here.

Management VLAN: set the VLAN here, in which the management is to be located. Default: “1”

ACD Mode: you can enable/disable the “Address Conflict Detection” function here.

ACD Status Information: clicking on the link opens the “Device Status” page.



Figure 5-20 ACD status information on the “Device Status” page

5.2.2.4 Service

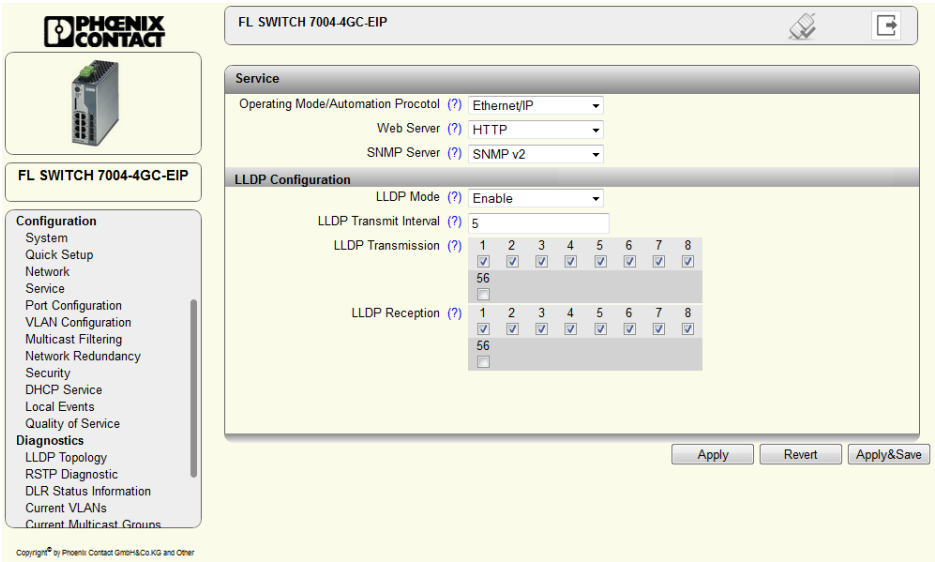

Figure 5-21 “Service” web page

Operating Mode / Automation Protocol:

– None: The device operates without stack.
– Ethernet/IP: The device operates with EtherNet/IP stack.

Web Server: you can enable/disable the web server function here.

SNMP Server: you can enable/disable the SNMP server function here.

LLDP Mode:

– Disable: LLDP is disabled
– Enable: LLDP is enabled
– Send only: only LLDP BPDUs are sent.
– Receive only: only LLDP BPDUs are received.

LLDP Transmit Interval: here you can set the interval in which LLDP telegrams are to be sent. The value must be between 5 and 32786 seconds (default: 5 s).

LLDP Transmission: you can enable/disable port-specific forwarding of LLDP telegrams here

LLDP Reception: you can enable/disable port-specific ignoring of LLDP telegrams here.

5.2.2.5 Port Configuration

Individual Port Configuration

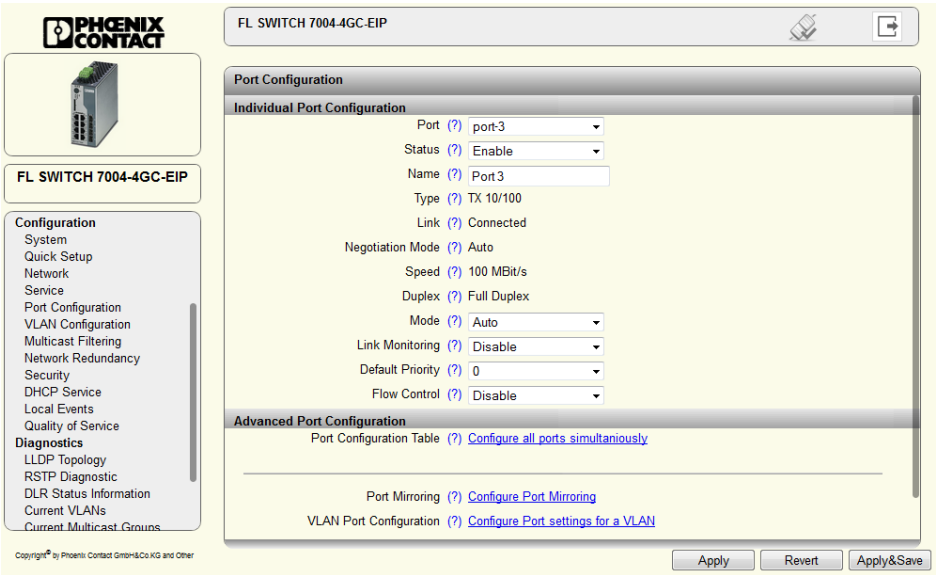

Figure 5-22 “Port Configuration” web page

Port: select the port that you want to configure individually.

Status: the port can be disabled here.

Name: you can assign the port a name.

Type: describes the physical properties of the port.

Link: displays the current link status of the port.

Negotiation Mode: displays the negotiation mode.

Speed: displays the speed at which the port is operating.

Duplex: displays the transmission mode of the port.

Mode: the port can be set to a fixed speed and transmission mode here.

Link Monitoring: here you can set whether the link behavior is to be monitored at the selected port.

Default Priority: set the priority for incoming data packets at this port here.

Flow Control: flow control for the selected port can be enabled and disabled here.

Advanced Port Configuration

Clicking on the “Configure all ports simultaneously” link takes you to the “Port Configuration Table” page. You can set the status, mode, and link monitoring there for all ports.

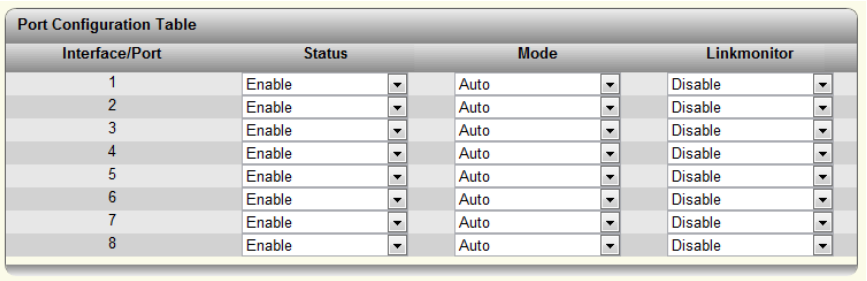

Figure 5-23 “Port Configuration Table” web page

Clicking on the “Configure Port Mirroring” button takes you to the port mirroring configuration (see “Port Mirroring” on page 62).

Clicking on the “Configure Port Settings for a VLAN” button takes you to the “VLAN Port Configuration” page (see “VLAN Configuration” on page 101).

Clicking on the “Configure Port Trunking” button takes you to the “Link Aggregation” page (see ““Link Aggregation” web page” on page 45).

Clicking on the “Configure Port Security” button takes you to the “Port Based Security” page (see ““Port Based Security” web page” on page 53).

“Link Aggregation” web page

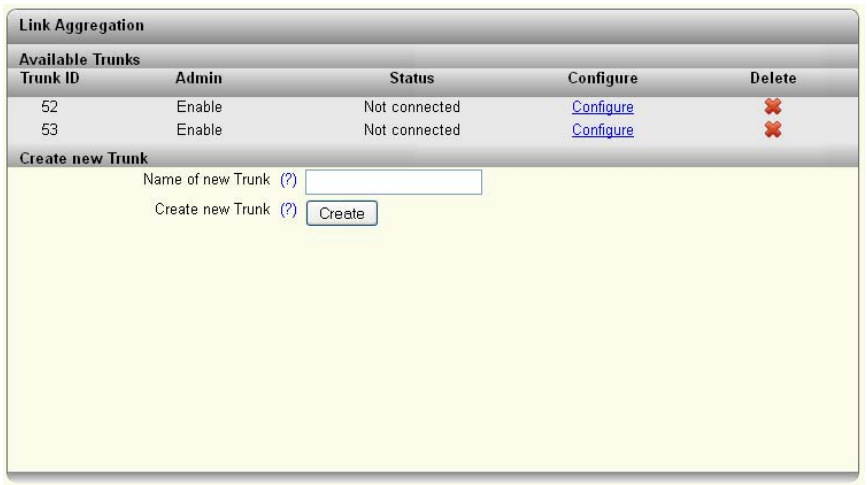

Figure 5-24 “Link Aggregation” web page

In order to create a new trunk, enter a name for the trunk in the “Name of new Trunk” field and click on the “Create” button. The trunk appears in the table at the top of the web page.

	A maximum of four trunks is possible on one device.

To configure a trunk, click on the “Configure” button next to the trunk that you wish to configure. To delete a trunk, use the red “X”.

“Configure Trunk” pop-up

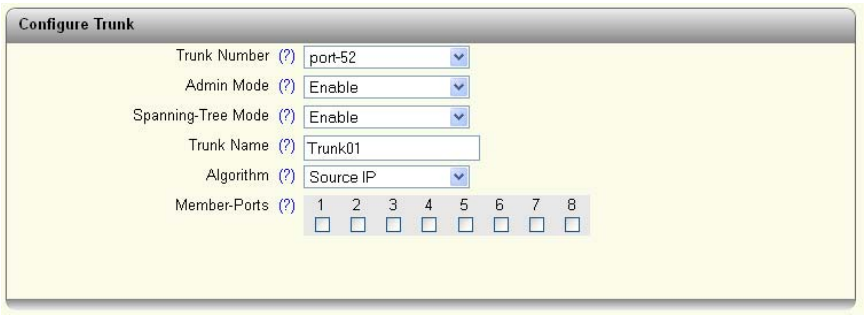

Figure 5-25 “Configure Trunk” web page

Trunk Number: all trunks created by you are displayed here. Select the trunk that you want to configure here.

Admin Mode: you can enable/disable a trunk here.

Spanning-Tree Mode: select whether the RSTP protocol is to be enabled for this trunk here.

Trunk Name: you can set a name for the trunk here.

Algorithm: you can specify the parameters that will be used as the basis for the physical output port here.

Member-Ports: select up to four ports that should belong to the trunk here.

5.2.2.6 VLAN Configuration

For additional information on “VLAN”, refer to “Virtual Local Area Network - VLAN” on page 101.

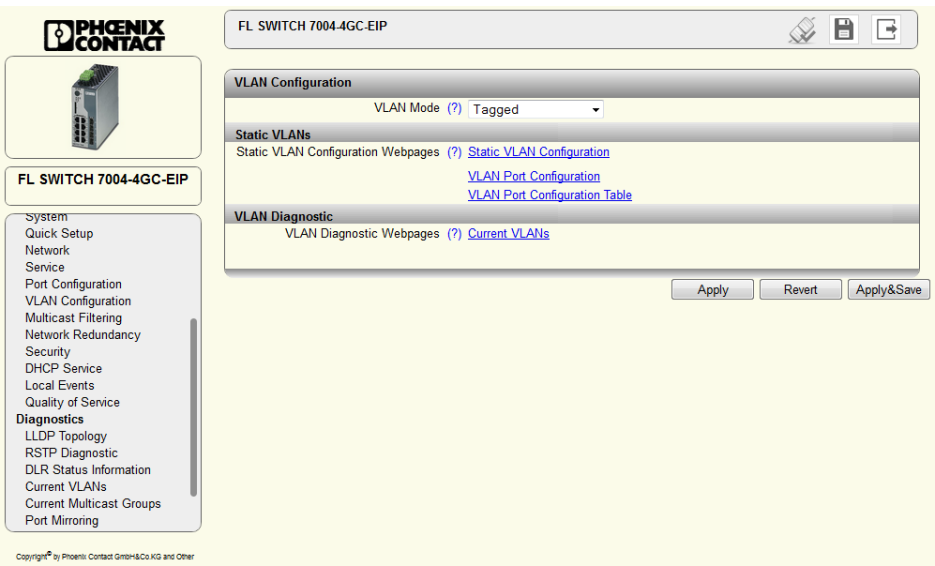

Figure 5-26 “VLAN Configuration” web page

5.2.2.7 Multicast Filtering

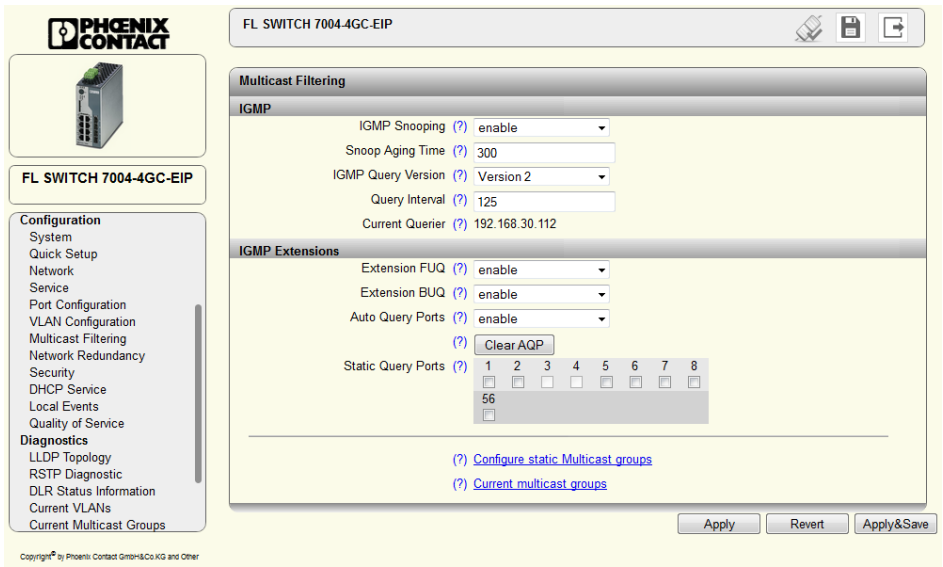

Figure 5-27 “Multicast Filtering” web page

For additional information on “Multicast”, refer to “Multicast Filtering” on page 97.

5.2.2.8 Network Redundancy

Spanning-Tree Configuration

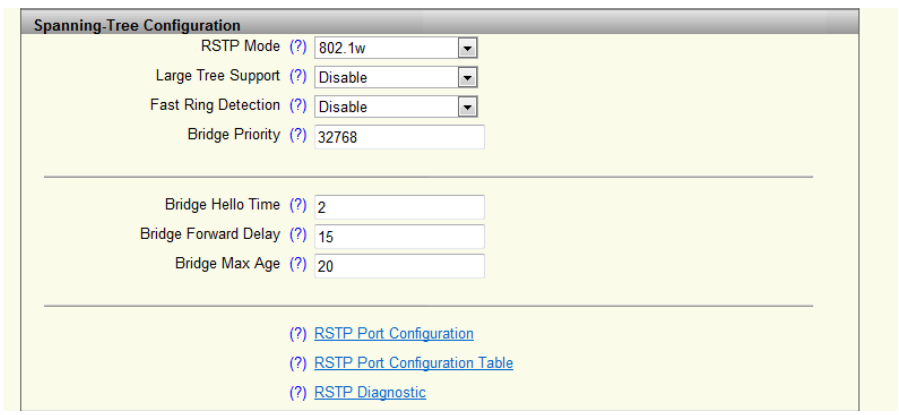

Figure 5-28 “Spanning-Tree Configuration” configuration area

RSTP Mode:

– Disable: the RSTP function is not activated
– 802.1w: the RSTP function is activated globally and operates according to standard 802.1w

The functions below are only available if “802.1w” is activated.

- Large Tree Support: the “Large Tree Support” option makes the ring topology suitable for 28 switches along the relevant path if RSTP is used. The “Large Tree Support” option could provide an RSTP ring topology with up to 57 devices.
- Fast Ring Detection: this function speeds up switch-over to a redundant path in the event of an error and provides easy diagnostics. RSTP fast ring detection provides each ring with an ID. This ID is made known to each switch in the relevant ring. A switch can belong to several different rings at the same time.
- Bridge Priority: the bridge and backup roots can be specified via “Bridge Priority”. Only multiples of 4096 are permitted. The value will be rounded automatically to the next multiple of 4096. Once you have clicked on “Apply&Save”, the initialization mechanism is started (default value: 32768).
- Bridge Hello Time: specifies the time interval within which the root bridge regularly reports to the other switches via BPDU.
- Bridge Forward Delay: the bridge forward delay value indicates how long the switch is to wait for the port state in STP mode to change from “Discarding” to “Listening” and from “Listening” to “Learning” (2 x forward delay).
- Bridge Max Age: the parameter is set by the root switch and used by all switches in the ring. The parameter is sent to make sure that each switch in the network has a constant value, against which the age of the saved configuration is tested.

Clicking on the “RSTP Port Configuration” button takes you to the “RSTP Port Configuration” pop-up.

Clicking on the “RSTP Port Configuration Table” button takes you to the “RSTP Port Configuration Table” pop-up (see Page 49).

Clicking on the “RSTP Diagnostic” button opens the “RSTP Diagnostic” page as a pop-up (see Page 60).

Pop-up: RSTP Port Configuration

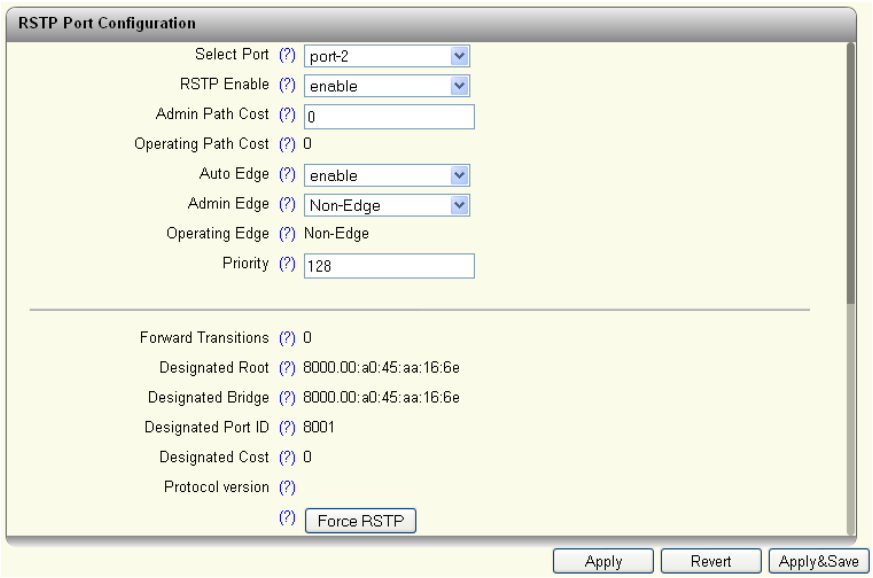

Figure 5-29 “RSTP Port Configuration” web page

Select Port: select the port for which you want to change the RSTP settings here.

RSTP Enable:

– Enable: RSTP is activated for the port
– Disable: RSTP is deactivated for the port

Admin Path Cost: displays the path costs set for this port. A path cost equal to “0” activates the cost calculation according to the transmission speed (10 Mbps = 2000000; 100 Mbps = 200000).

Operating Path Cost: displays the path costs used for this port.

Auto Edge: here you can set whether an automatic change from non-edge port to edge port is to be carried out after a link up.

Admin Edge: here you can set whether this port is to be operated as an edge port (default setting), if possible.

Operating Edge: indicates whether this port is operated as an edge port or a non-edge port.

Priority: indicates the priority set for this port (default value: 128).

Forward Transitions: indicates the number of times the port switches from the “Discarding” state to the “Forwarding” state.

Designated Root: indicates the root bridge for this spanning tree.

Designated Bridge: indicates the switch from which the port receives the best BPDUs.

Designated Port ID: indicates the port via which the BPDUs are sent from the designated bridge. The value is based on the port priority (2 digits) and the port number.

Designated Cost: displays the path costs of this segment to the root switch.

Protocol Version: displays the protocol version.

Pop-up: RSTP Port Configuration Table

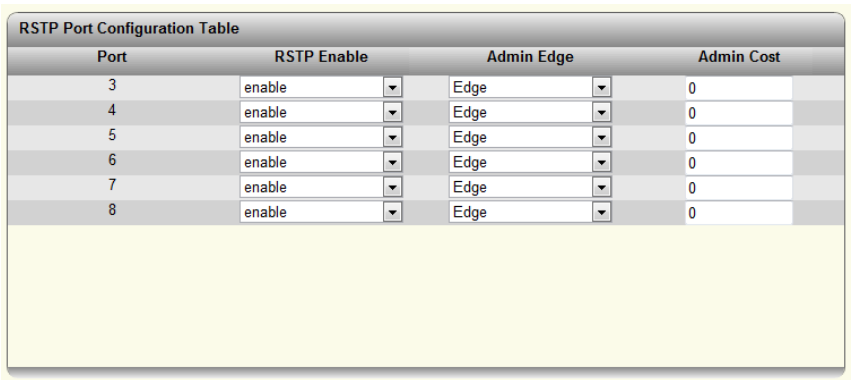

Figure 5-30 “RSTP Port Configuration Table” web page

Port: indicates the ports for which RSTP is available.

RSTP Enable: here you can individually activate or deactivate RSTP for each port.

Admin Edge: here you can set whether this port is to be operated as an edge port (default setting), if possible.

Admin Cost: displays the path costs set for this port. A path cost equal to “0” activates the cost calculation according to the transmission speed (10 Mbps = 2000000; 100 Mbps = 200000).

“Redundancy Port Table” pop-up

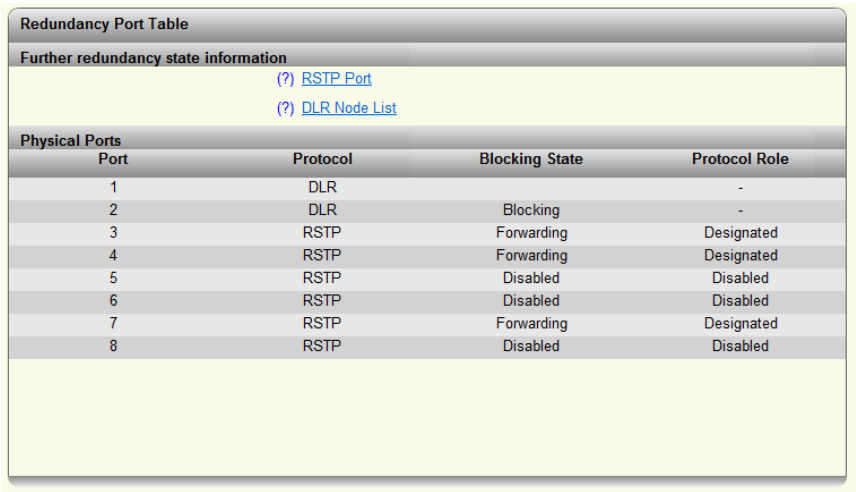

Figure 5-31 “Redundancy Port Table” web page

Device Level Ring / IEEE 1588 Transparent Clock Configuration

Device Level Ring is a ring redundancy protocol that allows up to 50 participants in the ring a switching time that is 3 ms faster. Please observe that the number of devices in the ring can be limited by the controller.

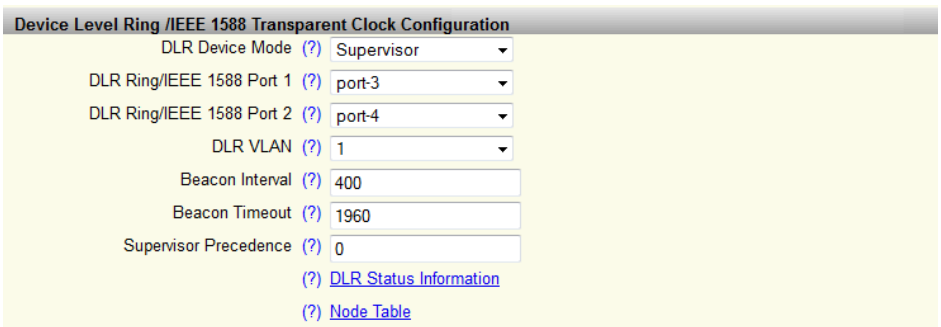

Figure 5-32 “Device Level Ring / IEEE 1588 Transparent Clock Configuration” web page

DLR Device Mode: select the role of the switch in your Device Level Ring.

– Disable: DLR is deactivated.
– Supervisor: the device acts as the master in the ring.
– Node: the device acts as a node in the ring.

The DLR ring ports can be freely configured. Port 1 and port 2 do not necessarily have to be used. Gigabit ports cannot be configured as DLR ring ports.

DLR Ring/IEEE 1588 Port 1: determines the first ring port for the Device Level Ring.

DLR Ring/IEEE 1588 Port 2: determines the second ring port for the Device Level Ring.

The following fields are only available in supervisor mode.

Make sure that the DLR ports available on the supervisor are only connected to the DLR ports of the other devices.

Beacon Interval: here you can set the interval in which the beacon telegrams are sent. The value must be between 200 and 100000 (default: 400).

Beacon Timeout: here you can set the permitted timeout of a beacon telegram. The value must be between 400 and 500000 (default: 1960).

Supervisor Precedence: set the priority of the supervisor here. The highest value has the highest priority in the network. The value must be between 0 and 255 (default: 0).

If two devices in a DLR ring are configured with the same priority, the devices with the smaller MAC address will become the supervisor. The other device will assume the role of backup supervisor.

For the two configured DLR ports, the physical settings remain available. Settings for VLAN or port trunking are deleted and are reset to the default value.

Clicking on the “Status Information” link opens the “DLR Status Information” web page as a pop-up (see “DLR Status Information” on page 61).

Clicking on the “Node Table” button opens the “DLR Node Table” pop-up, which lists all the devices in the Device Level Ring. The “DLR Node Table” is only available in supervisor mode.

“DLR Node Table” pop-up

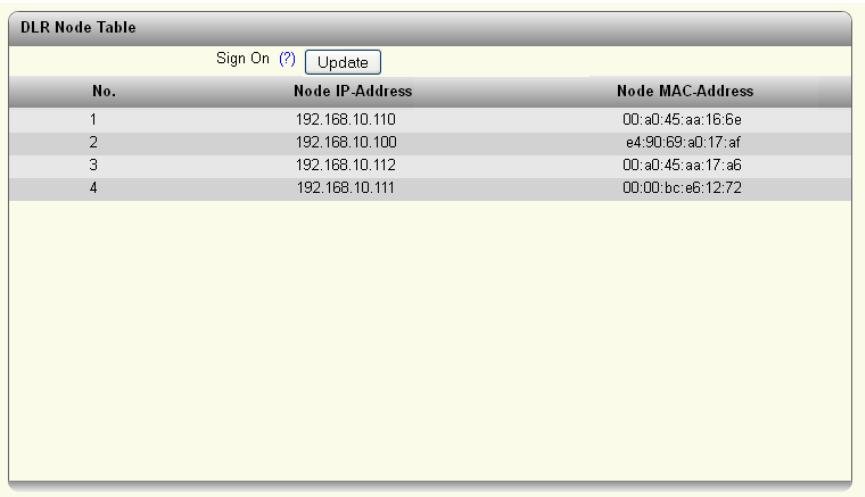

Figure 5-33 “DLR Node Table” web page

5.2.2.9 Security

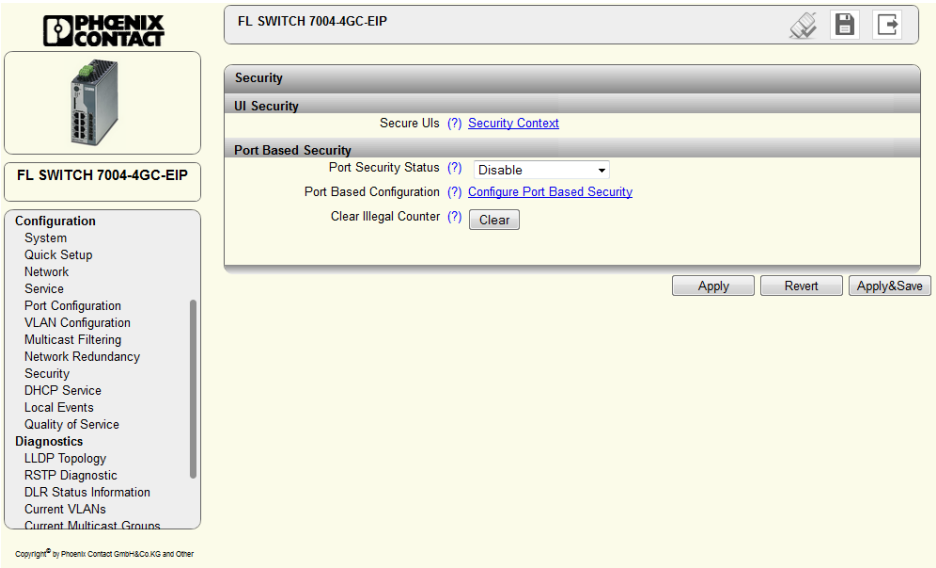

Figure 5-34 “Security” web page

Secure UIs: clicking on the “Security Context” link opens the pop-up of the same name (see Page 39).

Port Security Status: the port security can be globally activated here.

Port Based Configuration: clicking on the button opens the “Port Based Security” web page (see Page 53).

Clear Illegal Counter: clicking on the button sets the counter to “0”.

“Port Based Security” web page

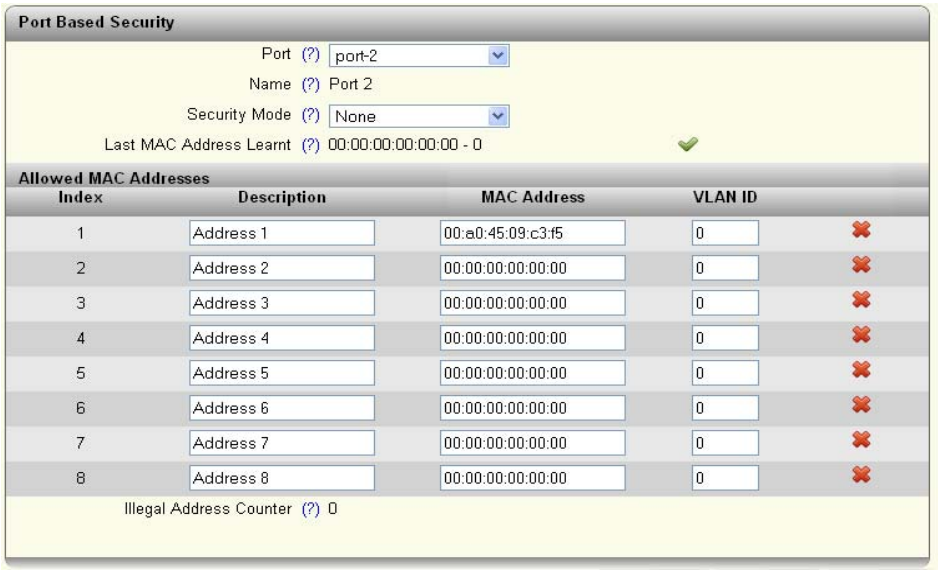

Figure 5-35 “Port Based Security” web page

Port: select the port for which the security settings should be made here.

Name: indicates the name of the selected port.

Security Mode: set here what the process should be if a MAC address that is not permitted is detected by the device.

– None: no security settings are available for this port.
– Trap: if a MAC address that is not permitted is detected at the port, a trap is sent to the predefined trap destination address. The packets are not blocked.
– Block: if a MAC address that is not permitted is detected at the port, all packets are blocked at the port and a trap is sent to the predefined trap destination address. The packets at this port remain blocked until a permitted MAC address is detected.

Last MAC Address Learned: displays the MAC address of the last connected device. By clicking on the green tick, this MAC address can be added to the list of permitted MAC addresses.

Allowed MAC Addresses

Index: indicates the index of the permitted MAC addresses.

Description: a description for a permitted MAC address can be provided here.

MAC Address: enter a MAC address, for which you want to allow access. Alternatively, you can select the green tick after the “Last MAC Address Learned” field to use the last MAC address which was learned.

VLAN ID: enter the VLAN where the device is located which occupies the permitted MAC address.

Clicking on the red “X” to the right of this column deletes the permitted MAC address for this port.

Illegal Counter: counter which counts the packets of MAC addresses that are not permitted.

5.2.2.10 DHCP Service

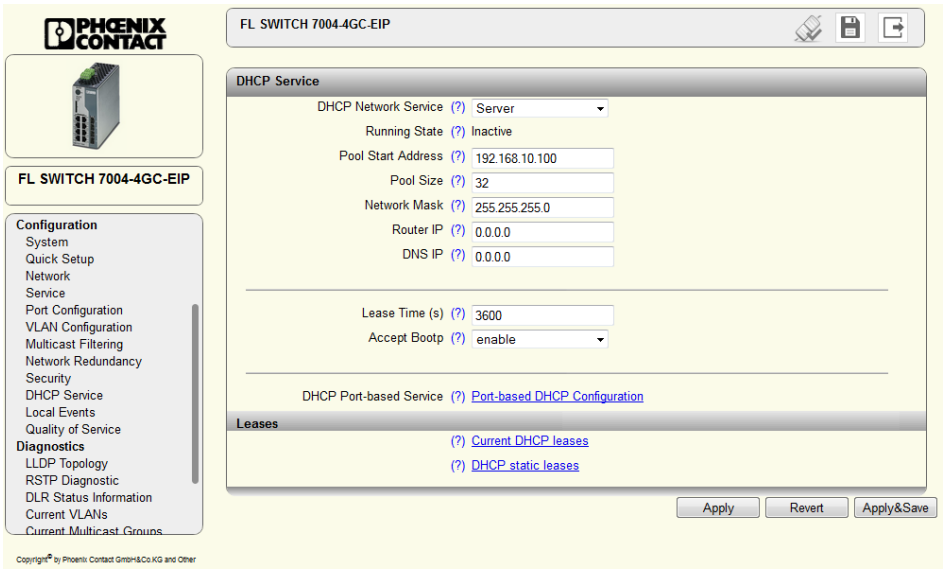

Figure 5-36 “DHCP Service” web page

DHCP Mode: select the DHCP service you wish to use here.

– None: a DHCP service is not used on the switch.
– Relay Agent: the DHCP relay agent (DHCP Option 82) is enabled.
– Server: the switch is used as the DHCP server.

The following fields are only available after selecting “Relay Agent” as the DHCP mode.

Option82: select the address which should be used as the remote ID here.

– IP: uses the IP address of the switch as the remote ID.
– MAC: uses the MAC address of the switch as the remote ID.

Server IP Address: set the IP address of the DHCP server in your network here.

Port Mode: select the ports for which the DHCP relay agent should be activated here.

The following fields are only available after selecting “Server” as the DHCP mode.

– Running State: shows the current status of the DHCP server. The status is “Inactive” if some setting options are incorrect.
– Pool Start Address: set the first IP address of the DHCP server address pool here.
– Pool Size: set the number of IP addresses in the DHCP server address pool here. Please note that the number of IP addresses must match the configured subnetwork.
– Network Mask: set the subnet mask that is assigned to the DHCP clients here.
– Router IP: set the router/default gateway IP address that is assigned to the DHCP clients here.
– DNS IP: set the DNS IP address that is assigned to the DHCP clients here.

- Lease Time(s): the time that the DHCP server leases an IP address to a client before it has to report to the server again can be set here. The value must be between 300 and 2592000 seconds, “0” is interpreted as an infinite time (default: 3600).
- Accept Bootp: here you can set whether the switch acting as the DHCP server accepts BootP requests. If this function is activated, an IP address with an infinite lease time is assigned to the requesting DHCP clients.
- Current leases: opens the “Current DHCP Leases” pop-up where the IP addresses that are currently assigned are displayed.
- Static leases: opens the “DHCP Static Leases” pop-up for configuring static IP address assignment.
- Port Local service: opens the “Port-based DHCP Configuration” pop-up.

Pop-up: Current DHCP Leases

This pop-up displays the IP addresses that are currently assigned.

- Leased IP: displays the assigned IP addresses.
- Client ID: displays the MAC address of the client to which the IP address is assigned.
- System Uptime: displays the time that has elapsed since the IP address was assigned to the client.
- Local Port: indicates the port to which the client is connected.
- State: indicates the status of the client.
- Lease count: displays the number of assigned IP addresses.
- Release: clicking on the “Release” button releases unused entries.

Pop-up: DHCP Static Leases

This pop-up displays the configured static IP assignment.

Lease list:

- IP address: displays the static IP address assigned.
- Client address: displays the MAC address of the client.
- Delete: clicking on the red cross deletes the entry.

Create new static entry:

- IP address: enter the static IP address that you wish to assign here.
- Client address: enter the MAC address to which you wish to assign a static IP address here.
- Create: click on the “Create” button to carry out static assignment.

Pop-up: Port-based DHCP Configuration

The port-based DHCP server functionality can be configured in this pop-up.

- Select Port: select the port for which you wish to carry out port-based DHCP server configuration here.
- Local Service enable: activate the port-based DHCP server functionality for the selected port here.
- Local IP: enter the IP address that is assigned to the client at the selected port here.
- Netmask: enter the subnet mask that is assigned to the client at the selected port here.
- Router: enter the gateway address that is assigned to the client at the selected port here.

– DNS: enter the DNS address that is assigned to the client at the selected port here.

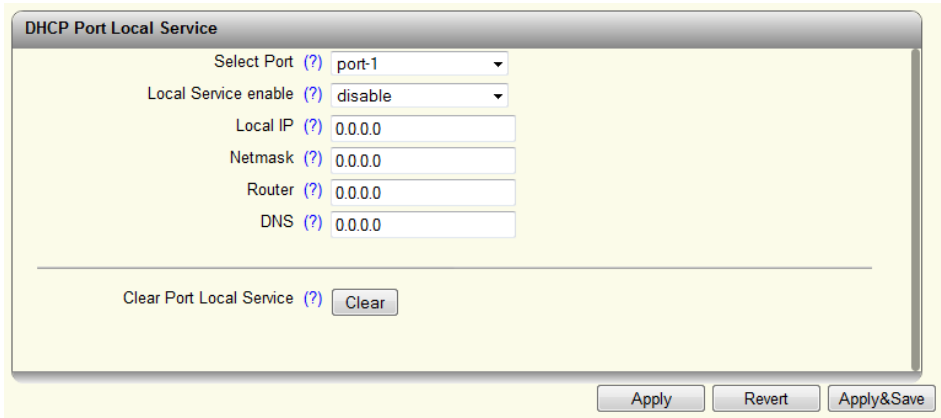

Figure 5-37 “DHCP Port Local Service” pop-up

5.2.2.11 Local Events

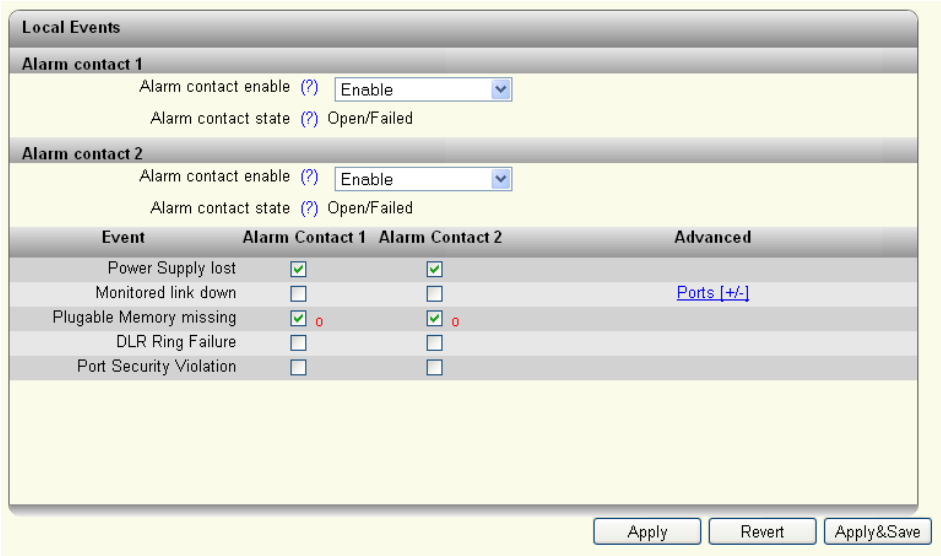

Figure 5-38 “Local Events” web page

Alarm contact 1:

Here you can activate alarm contact 1 and read the current status of the alarm contact (if a red “**o**” is present, this event has occurred).

Alarm contact 2:

Here you can activate alarm contact 2 and read the current status of the alarm contact (if a red “**o**” is present, this event has occurred).

Events: here you can determine under which conditions an alarm contact should report an error.

– Power Supply lost: in the event that US1 or US2 is lost

– Monitored link down: under “Advanced”, select the ports to which link down behavior should be reported.
– Pluggable Memory missing: an error message is generated if no memory card is present.
– DLR Ring Failure: if there is an error in the Device Level Ring, this is indicated by an error message.
– Port Security Violation: the alarm contact indicates an error if a MAC address that is not permitted is detected at a port.

5.2.2.12 Quality of Service

Flow Control

Port Configuration: clicking on the “Configure Flow Control per port” link opens the “Port Configuration” web page, which contains the configuration options for flow control.

Port Configuration Table: clicking on the “Configure Flow control for multiple ports at once” link opens the “Port Configuration Table” web page where flow control can be configured for all ports.

Storm Control

Storm Control Configuration: clicking on the “Configure Storm Control per port” link opens the “Storm Control Configuration” web page.

Storm Control Configuration Table: clicking on the “Configure Storm control for multiple ports at once” link opens the “Storm Control Configuration Table” web page.

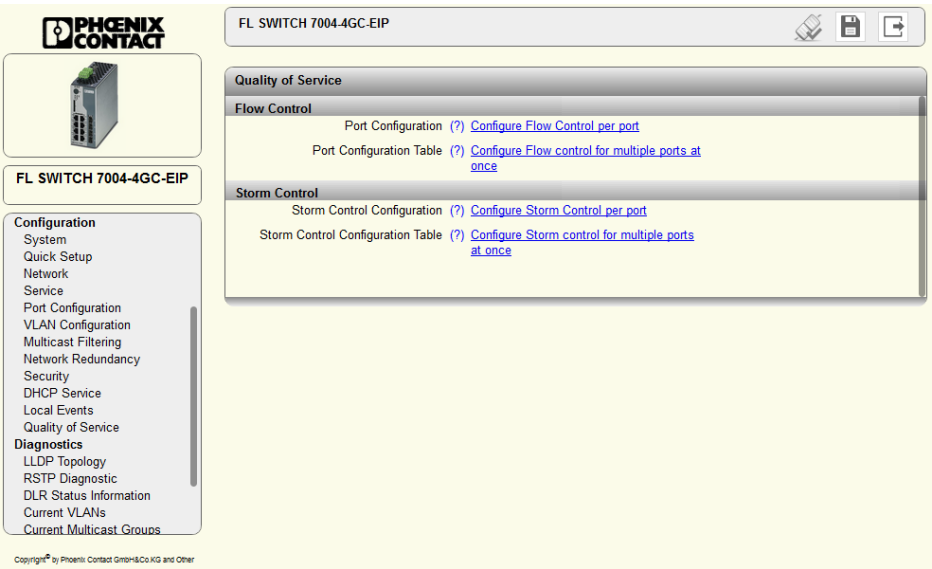

Figure 5-39 “Quality of Service” web page

“Storm Control Configuration” web page

Port: select the port here for which storm control is to be configured.

Name: the name of the selected port is displayed here.

Broadcast Storm Control: broadcast storm control can be activated or deactivated here.

Broadcast Threshold: set the threshold value in kbps for broadcast storm control here.

Multicast Storm Control: multicast storm control can be activated or deactivated here.

Multicast Threshold: set the threshold value in kbps for multicast storm control here.

Unknown Unicast Storm Control: storm control for unknown unicasts can be activated or deactivated here.

Unknown Unicast Threshold: set the threshold value in kbps for unknown unicast storm control here.

Storm Control Configuration Table: clicking on the “Configure Storm control for multiple ports at once” link opens the “Storm Control Configuration Table” web page.

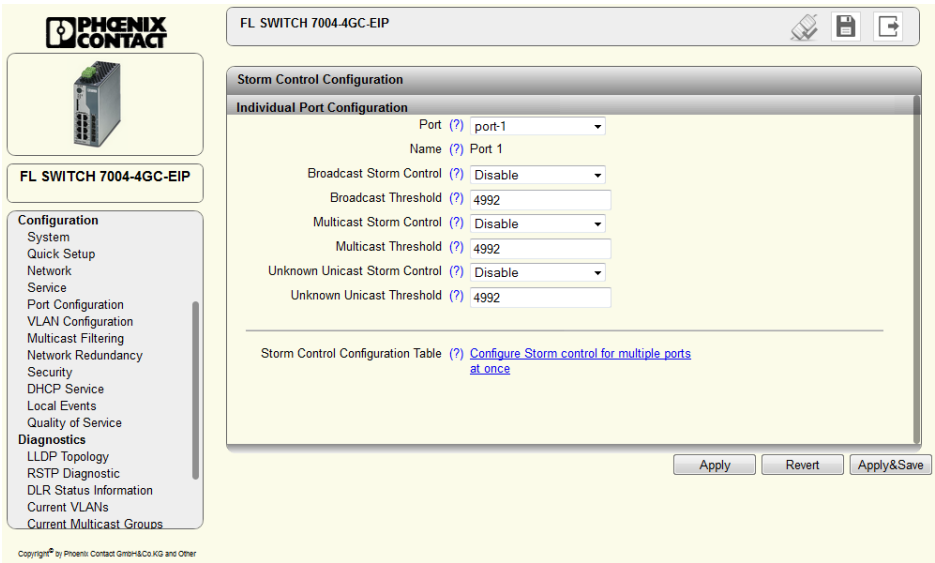

Figure 5-40 “Storm Control Configuration” web page

Web page: Storm Control Configuration Table

Broadcast Mode: broadcast storm control can be activated or deactivated here.

Broadcast Rate: set the threshold value in kbps for broadcast storm control here.

Multicast Mode: multicast storm control can be activated or deactivated here.

Multicast Rate: set the threshold value in kbps for multicast storm control here.

Unicast Mode: storm control for unknown unicasts can be activated or deactivated here.

Unicast Rate: set the threshold value in kbps for unknown unicast storm control here.

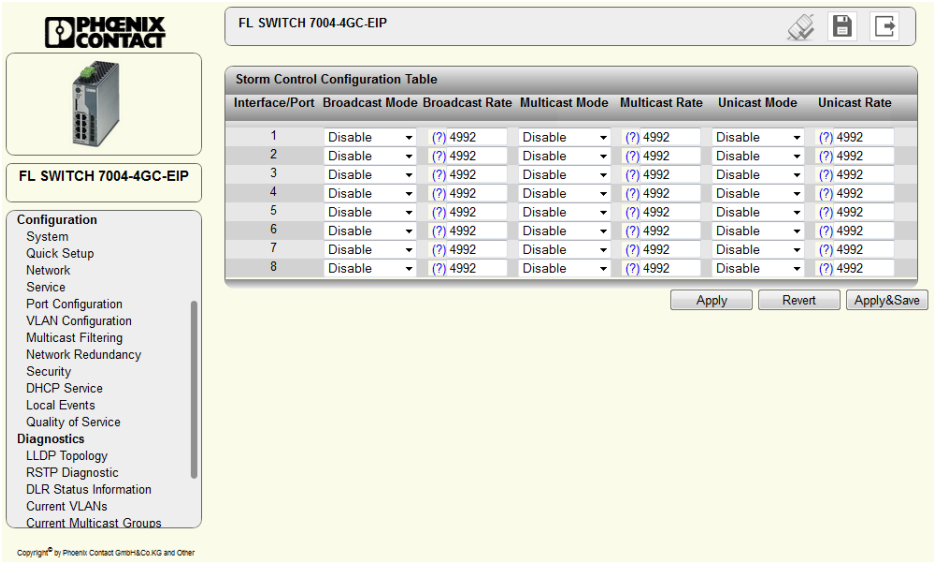

Figure 5-41 “Storm Control Configuration Table” web page

5.2.3 Diagnostics area of WBM

5.2.3.1 LLDP Topology

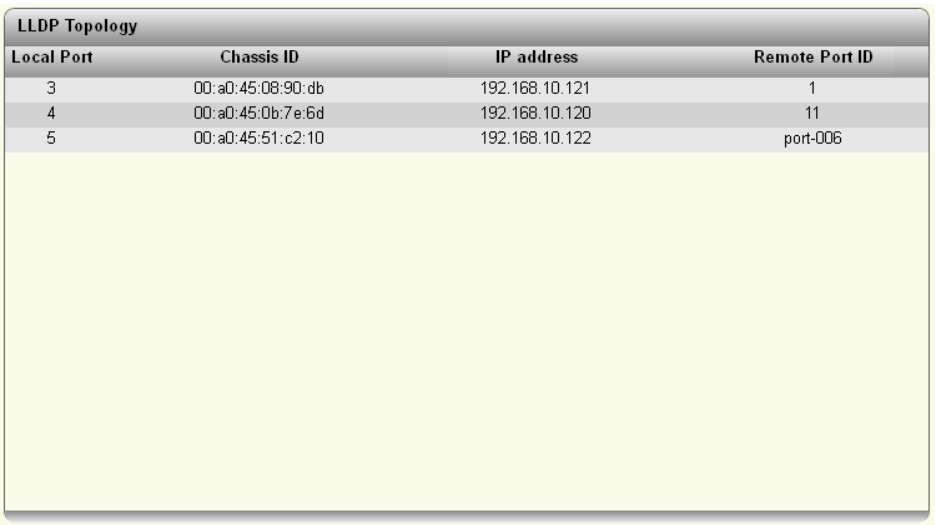

Figure 5-42 “LLDP Topology” web page

This web page provides neighborhood/topology information which the device has been able to obtain from the network to which it is connected.

5.2.3.2 RSTP Diagnostic



Figure 5-43 “RSTP Diagnostic” web page

Designated Root: indicates the root bridge for this spanning tree.

Root Port: indicates the port to which the root is connected. If the root is not directly connected, it shows the direction of the root.

Root Cost: displays the total path costs for the root.

Topology Changes: indicates the number of topology changes.

Last Topology Change: indicates when the last topology change took place.

Hello Time: shows the hello time set at the root.

Forward Delay: shows the forward delay set at the root.

Max Age: shows the max age time set at the root.

Clicking on the “Redundancy Port Table” button opens a table with information on the individual ports and their redundancy mechanism assignment.

5.2.3.3 DLR Status Information

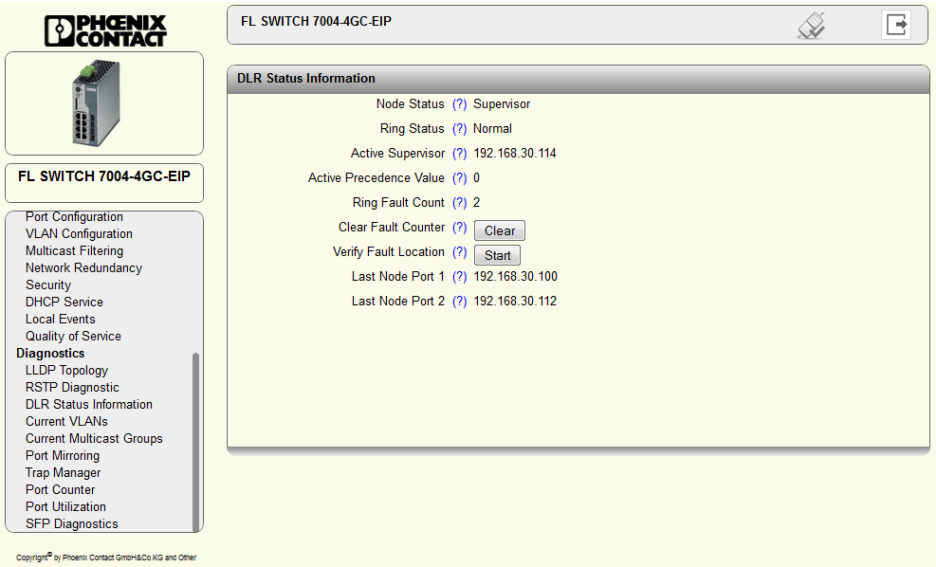

Figure 5-44 “DLR Status Information” web page

Node Status: indicates the status of the device in the DLR ring.

Ring Status: indicates the status of the DLR ring.

Active Supervisor: displays the IP address of the active DLR supervisor.

Active Precedence Value: indicates the priority value of the supervisor.

Ring Fault Counter: displays the number of errors in the ring since the last counter reset or device restart.

Clear Fault Counter: resets the ring fault counter.

Verify Fault Location: determines the last ring node that can be reached in the event of an error.

Last Node Port 1: shows the IP address of the last node that can be reached at DLR port 1.

Last Node Port 2: shows the IP address of the last node that can be reached at DLR port 2.

5.2.3.4 Current VLANs

For additional information, refer to “Current VLANs” on page 103.

5.2.3.5 Current Multicast Groups

For additional information, refer to “Multicast Filtering” on page 97.

5.2.3.6 Port Mirroring

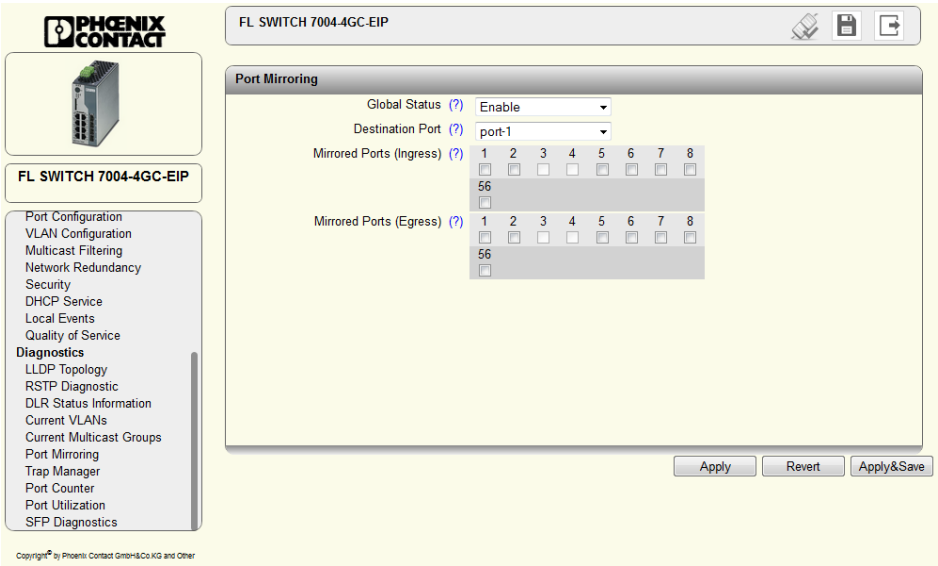

Figure 5-45 “Port Mirroring” web page

Global Status:

– Enable: port mirroring is activated globally
– Disable: port mirroring is deactivated globally

Destination Port: select the port to which the measuring device (PC) is connected here.

Mirrored Ports (Ingress): specify the ports from which the incoming data traffic should be mirrored here.

Mirrored Ports (Egress): specify the ports from which the outgoing data traffic should be mirrored here.

5.2.3.7 Trap Manager

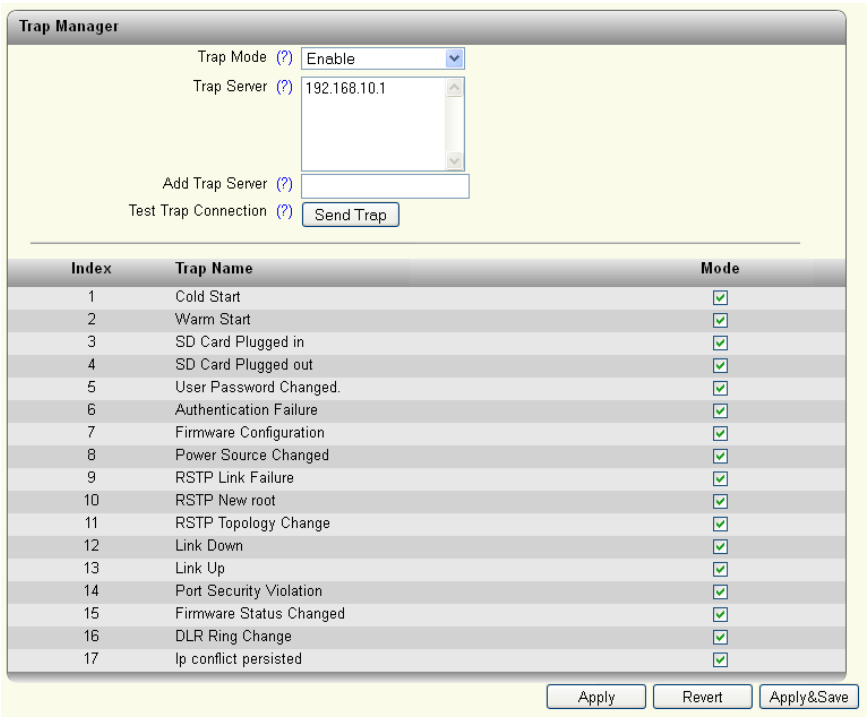

Figure 5-46 “Trap Manager” web page

Trap Mode:

– Enable: sending of SNMP traps is enabled
– Disable: sending of SNMP traps is disabled

Trap Server: All trap servers which are to receive SNMP traps from this device are displayed here.

Add Trap Server: enter the IP address of a trap server and click on “Add&Save” to create this trap server.

Test Trap Connection: the connection to the trap server is tested by clicking on the “Send Trap” button.

The table lists the SNMP traps which can be sent by the device. Here you can select the actions for which SNMP traps should be sent.

5.2.3.8 Port Counter

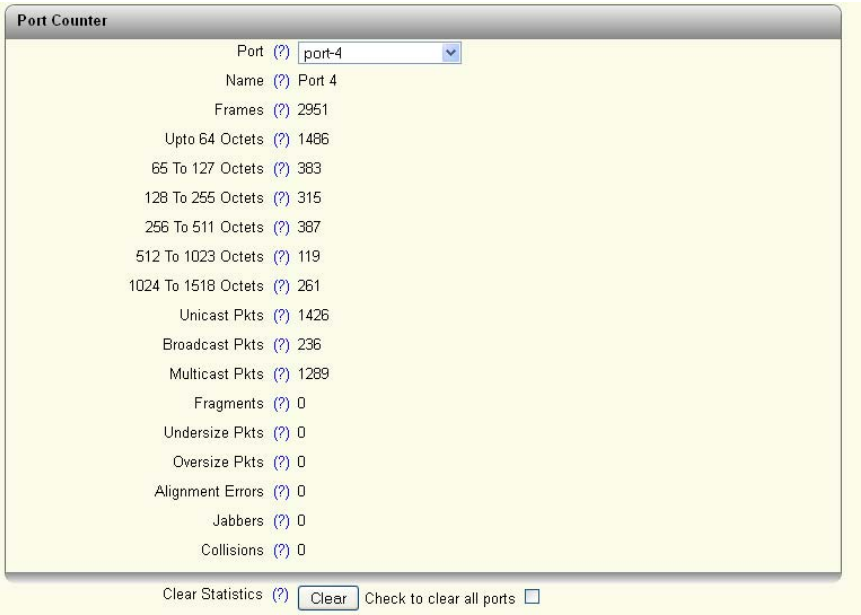

Figure 5-47 “Port Counter” web page

Here you will find an overview of the port statistics.

5.2.3.9 Port Utilization

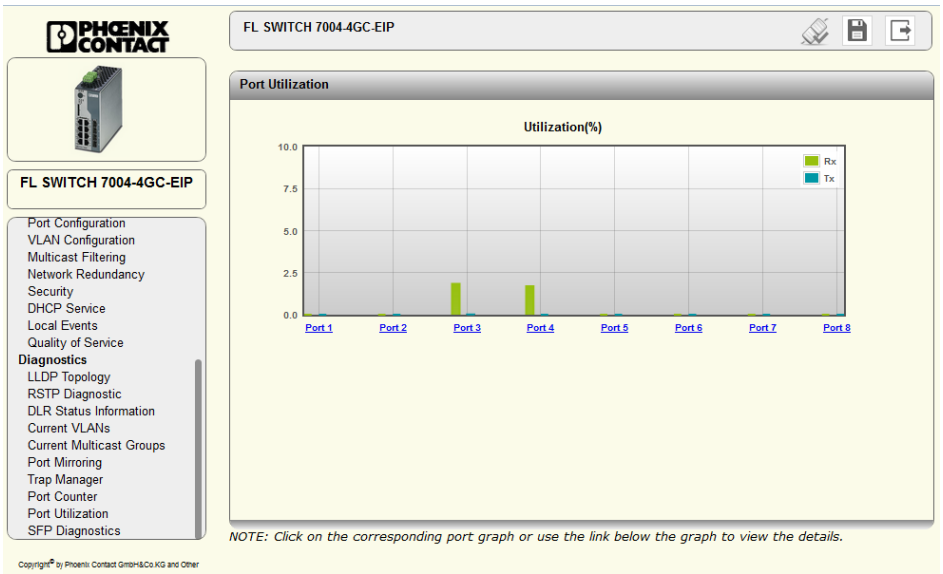

Figure 5-48 “Port Utilization” web page

Here you will find an overview of the port utilization for this device as a percentage. For a detailed overview, click on the graph of an individual port.

5.2.3.10 SFP Diagnostics

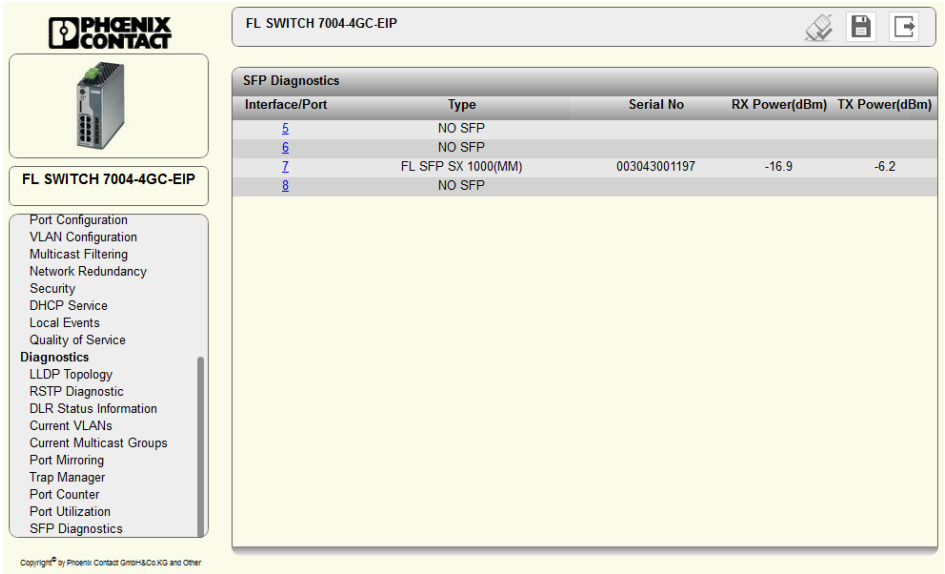

Figure 5-49 “SFP Diagnostics” web page

Here you will find an overview of the SFP ports.

Interface/Port: the ports that can be used with SFP modules are displayed here. Clicking on a port number opens the port configuration for that port.

Type: the type of SFP module used is displayed here. If no SFP module is inserted, “NO SFP” is displayed.

Serial No: the serial number of the SFP module used is displayed in this column.

RX Power (dBm): the incoming power level is displayed in this column.

TX Power (dBm): the outgoing power level is displayed in this column.

6 Simple Network Management Protocol (SNMP)

6.1 General function

SNMP is a non-proprietary standard for Ethernet management. It defines commands for reading and writing information, and defines formats for error and status messages. SNMP is also a structured model that consists of agents, their relevant Management Information Base (MIB), and a manager. The manager is a software tool that is executed on a network management station. The agents are located inside switches, bus terminals, routers, and other devices that support SNMP. The task of the agents is to collect and provide data in the MIB. The manager regularly requests and displays this information. The devices can be configured by writing data from the manager to the MIB. In the event of an emergency, the agents can also send messages (traps) directly to the manager.

All configuration modifications, which are to take effect after a device restart, must be saved permanently using the “flWorkFWCtrlConfSave” object.

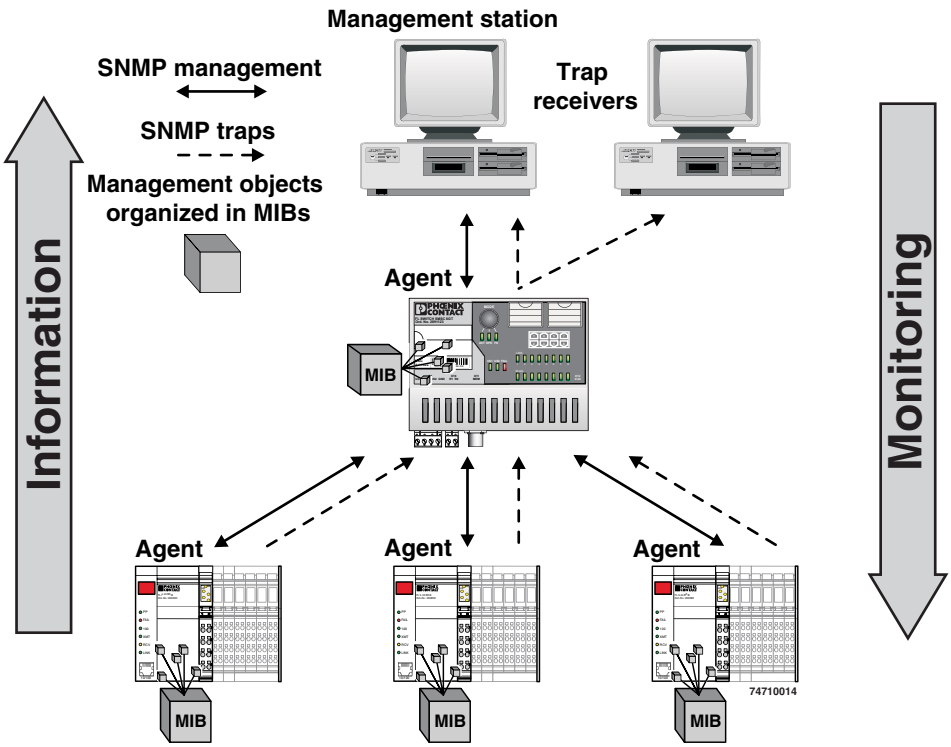

Figure 6-1 Schematic view of SNMP

SNMP interface

All managed Factoryline components have an SNMP agent. The agent of this type of device manages the following MIBs (Management Information Bases):

– FL Managed Infrastructure MIB
– lldpMIB

- RFC1213 MIB
- rmon
- snmpMIB
- ifMIB
- snmpFrameworkMIB
- etherMIB
- pBridgeMIB
- qBridgeMIB
- dot1dBridge
- rstpMIB
- IP MIB

Network management stations, such as a PC with Factory Manager, can read and modify configuration and diagnostic data from network devices via the Simple Network Management Protocol. In addition, any SNMP tools or network management tools can be used to access Factoryline products via SNMP. To do this, the MIBs supported by the relevant device must be made available to the SNMP management tools.

On the one hand, these are globally valid MIBs, which are specified and described in RFCs (Requests for Comments). This includes, for example, MIB2 according to RFC1213, which is supported by all SNMP-compatible network devices. On the other hand, manufacturers can specify their own SNMP objects, which are then assigned to a private manufacturer area in the large SNMP object tree. Manufacturers are then responsible for their own private (enterprise) areas, i.e., they must ensure that only one object (object name and parameters) is assigned to an object ID and can be published. If an object is no longer needed, it can be labeled as “expired”, but it cannot be reused with other parameters under any circumstances.

Phoenix Contact provides notification of ASN1 SNMP objects by publishing their descriptions on the Internet.

Reading SNMP objects is not password-protected. However, a password is required for read access in SNMP, but this is set to “public”, which is usual for network devices, and cannot be modified. By default upon delivery, the password for write access is REDACTED and can be changed by the user.



SNMP and the web interface use the same password, which can be changed by the user.

Another benefit for the user is the option of sending traps using the Simple Network Management Protocol.

Management Information Base (MIB)

Database which contains all the data (objects and variables) required for network management.

Agent

An agent is a software tool which collects data from the network device on which it is installed and transmits this data on request. Agents reside in all managed network components and transmit the values of specific settings and parameters to the management station. On a request of a manager or on the occurrence of a specific event, the agent transmits the collected information to the management station.

Traps

Traps are spontaneous SNMP alarm or information messages that are sent by an SNMP-compatible device when specific events occur. Traps are transmitted with maximum priority to various addresses, if required, and can then be displayed by the management station in plain text. The IP addresses that are to receive these traps (trap targets/receivers) must be set by the user on the relevant device.

trapPasswd

OID	1.3.6.1.4.1.4346.11.11.3.0.1
Description	Sent to the defined trap receivers on each modification or attempted modification of the device password and contains information about the status of the last modification or attempted modification.

trapFWHealth

OID	1.3.6.1.4.1.4346.11.11.3.0.2
Description	Sent on each firmware-related modification and contains additional information about the firmware status.

trapFWConf

OID	1.3.6.1.4.1.4346.11.11.3.0.3
Description	Sent each time the configuration is saved and informs the management station that the configuration has been saved successfully. This trap is sent in the event of configuration modifications (port name, port mode, device name, IP address, trap receiver address, port mirroring, etc.), which are not yet saved permanently. The trap therefore provides a warning that, if not saved permanently, the changes will be lost on a reset.

trapPowerSupply

OID	1.3.6.1.4.1.4346.11.11.3.0.4
Description	Sent each time the redundant power supply fails.

trapRstpRingFailure

OID	1.3.6.1.4.1.4346.11.11.3.0.6
Description	Sent in the event of a link interrupt in the redundant RSTP ring.

trapManagerConnection

OID	1.3.6.1.4.1.4346.11.11.3.0.99
Description	Trap to test the connection between the SNMP agent and the network management station.

6.2 Tree structure of the MIB

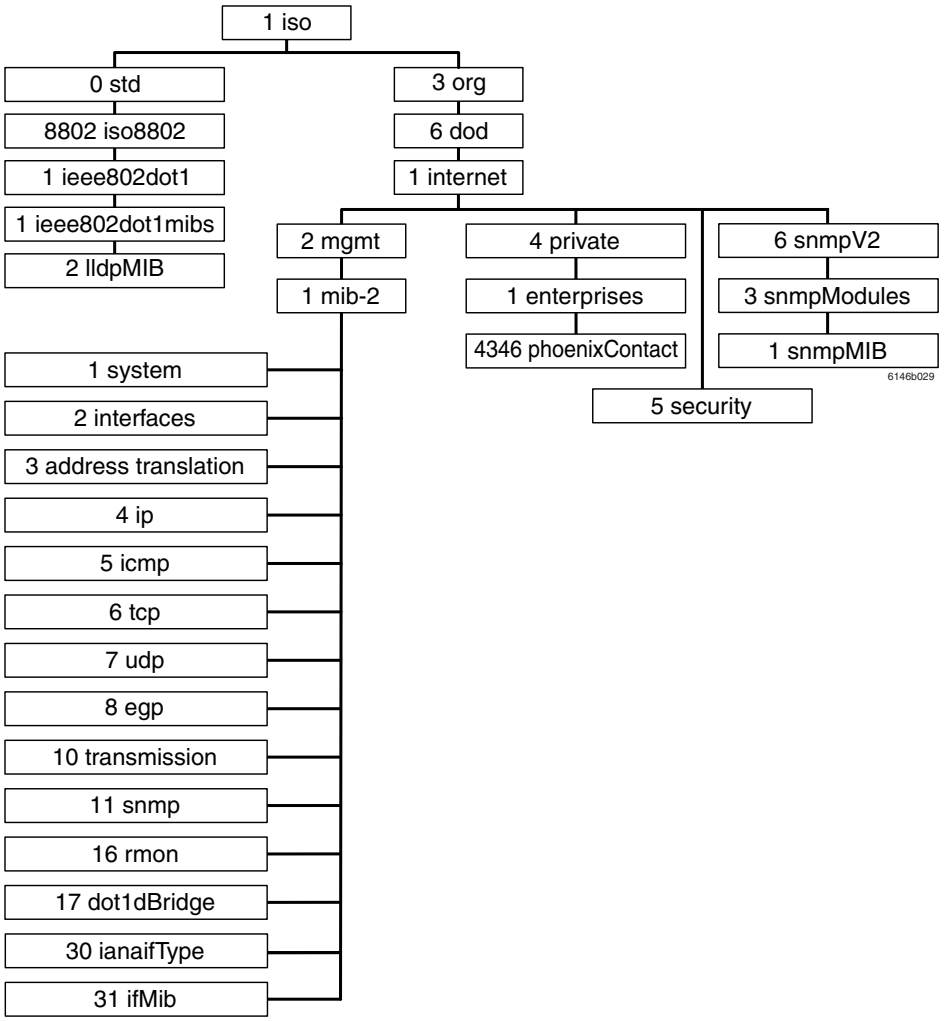

Figure 6-2 Tree structure of the MIB

Not all devices support all object classes. If an unsupported object class is requested, “not supported” is generated. If an attempt is made to modify an unsupported object class, the message “badValue” is generated.

The individual SNMP objects are located in the respective MIBs and can be downloaded from the Phoenix Contact e-shop. Note that the MIB is located in a firmware’s respective software package (zip file).



Please note that the following MIB objects are **not** available on the DLR ports:

Interface MIB

IfOutErrors, IfDiscards, IfUnknownProtos, IfOutDiscards

EtherStatsTable

EtherStatsUndersizePkts, EtherStatsOversizePkts, EtherStatsBroadcastPkts, EtherStatsMulticastPkts, EtherStatsFragments, EtherStatsJabbers, EtherStatsCollisions, EtherStats64Octets, EtherStats65-127Octets, EtherStats128-255Octets, EtherStats256-511Octets, EtherStats512-1023Octets, EtherStats1024-1518Octets

7 Device Level Ring - DLR

DLR increases the network availability, thanks to a redundant ring topology with a switch-over time of less than 3 ms for error detection and reconfiguration. DLR is a protocol that works on Layer 2 for multi-port EtherNet/IP™ devices. The use of DLR is transparent for the protocols which work on higher levels such as TCP/IP.

If a device is to be configured as ring supervisor in a DLR topology, the other switches in the ring must support DLR. Operating non-DLR switches in the ring is not recommended.

Possible topologies

The DLR protocol supports the 1-ring topology; multiple rings or overlapping rings are not possible. It is possible, when using suitable switches, to connect a redundant ring or operate multiple, restricted rings. As such, DLR protocol information must not leave the individual ring and appear in other rings.

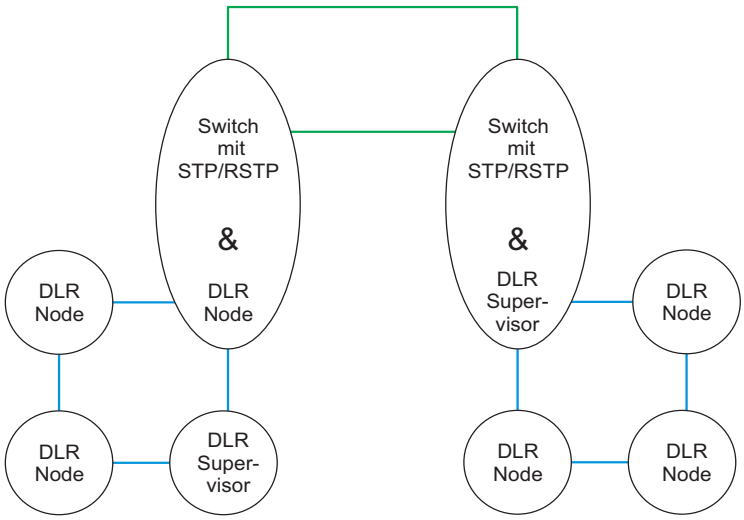

Figure 7-1 Redundant coupling of two DLR rings via STP/RSTP

The following topology shows four DLR rings, which each make up individual segments. These segments are redundantly meshed and connected with one another. As such, the individual segments are respectively separated from other segments, so that no protocol information can leave the particular ring.

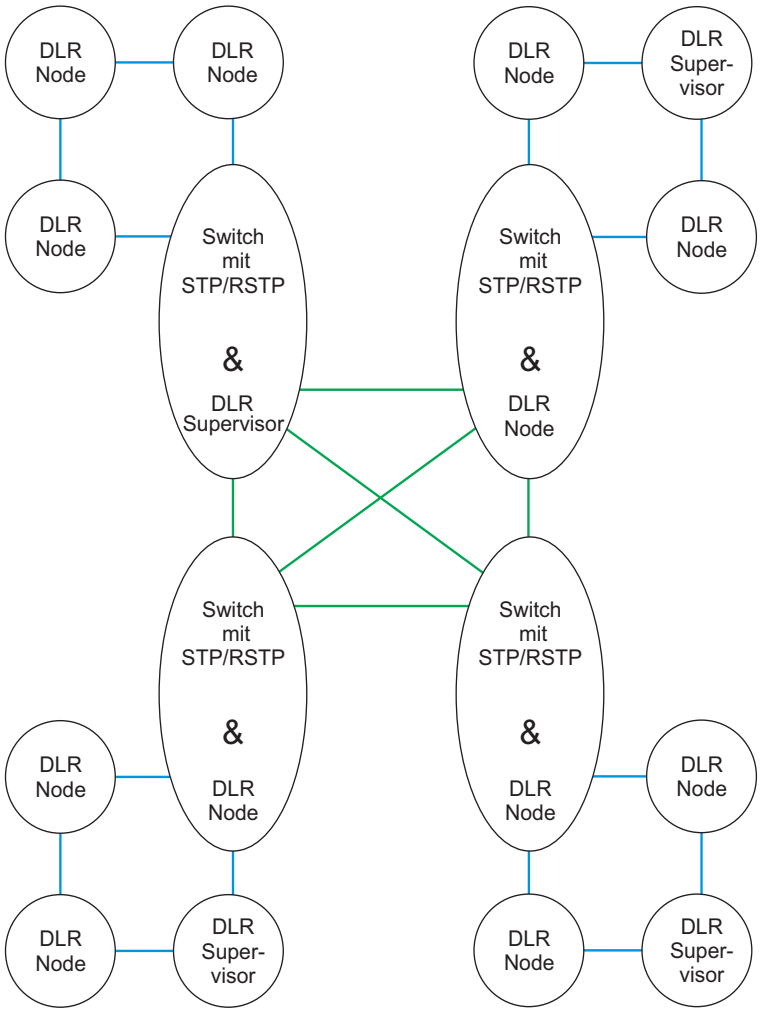

Figure 7-2 Meshed coupling of multiple DLR rings

Other possible topologies

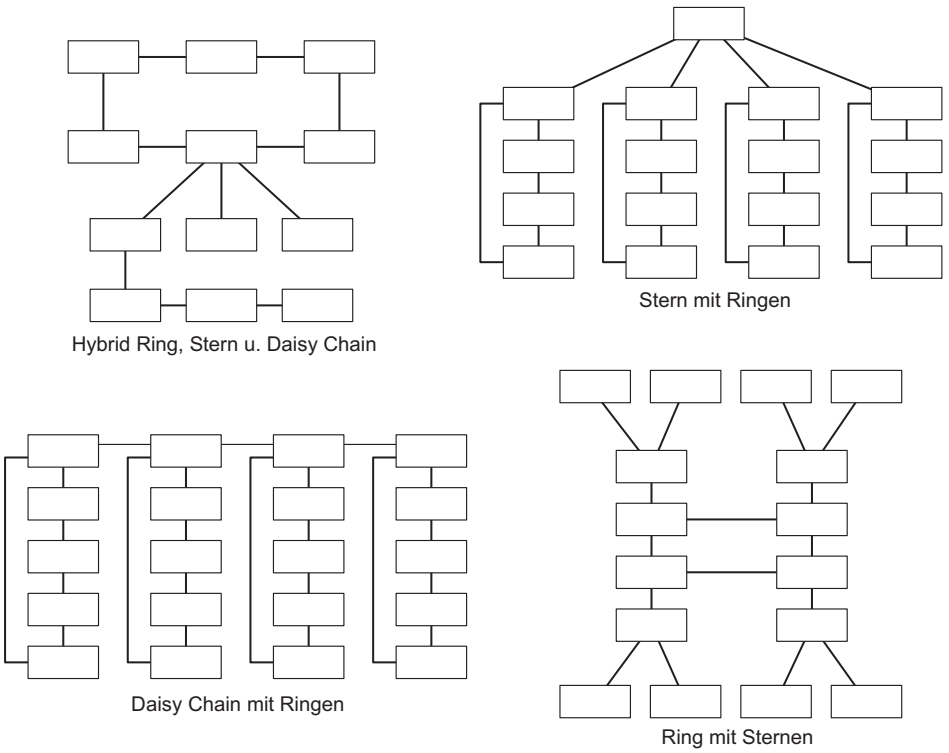

Figure 7-3 Other possible topologies

Please note that the DLR standard does **not** provide support for the following MIB objects:

Interface MIB

IfOutErrors, IfDiscards, IfUnknownProtos, IfOutDiscards

EtherStatsTable

EtherStatsUndersizePkts, EtherStatsOversizePkts, EtherStatsBroadcastPkts, EtherStatsMulticastPkts, EtherStatsFragments, EtherStatsJabbers, EtherStatsCollisions, EtherStats64Octets, EtherStats65-127Octets, EtherStats128-255Octets, EtherStats256-511Octets, EtherStats512-1023Octets, EtherStats1024-1518Octets

8 Common Industrial Protocol (CIP)

The switch supports the Common Industrial Protocol (CIP) and implements the “Managed Switch Profile”. CIP can be accessed by all ports assigned to the “Management VLAN” (VLAN 1, factory default).

EtherNet/IP™ uses the Common Industrial Protocol (CIP) as the application layer. IP and TCP or UDP are used for the network and transport layers.

CIP and EtherNet/IP™ are standardized by ODVA (www.odva.org) on a manufacturer-neutral basis.

The Common Industrial Protocol is an object-oriented protocol with two different types of communication between a controller and terminal devices.

The table below explains the two types of communication.

Table 8-1 CIP communication types

Connection type	Description
Explicit messaging	Explicit messaging is based on the principle of “request/response”. This means a controller or engineering system submits a query and the end device answers. For example, explicit messaging can be used for configuration and/or diagnostics.
Implicit messaging	Implicit messaging is used for the cyclic transmission of I/O data. This means, for example, that a terminal device sends an analog value which is present at a terminal device input. The time for a transmission cycle can be set via the Requested Packet Interval (RPI).

Electronic data sheets – EDS files

EDS files enable integration in a control system such as RSLogix.

The EDS file contains information about the parameters which can be set and configured via CIP.

Table 8-2 Devices and EDS file

Order No.	Device designation	File designation
2701418	FL SWITCH 7008-EIP	FL_SWITCH_7008_EIP.eds
2701419	FL SWITCH 7006/2FX-EIP	FL_SWITCH_7005_2FX_EIP.eds
2701420	FL SWITCH 7005/FX-2FXSM-EIP	FL_SWITCH_7005_1FX_2FXSM_EIP.eds
2701553	FL SWITCH 7004-4GC-EIP	FL_SWITCH_7004_4GC_EIP.eds
2701554	FL SWITCH 7006-2GC-EIP	FL_SWITCH_7006_2GC_EIP.eds
2702175	FL SWITCH 7004-2TC-2GC-EIP	FL_SWITCH_7002_2TC_2GC_EIP.eds

The EDS files can be loaded directly from the device via web-based management.

To do so, go to “Information” and then select the “Help & Documentation” menu item.

The EDS files are also available in the download area.

8.1 Supported EtherNet/IP™ objects

The device supports the following EtherNet/IP™ objects. Please refer to the EtherNet/IP™ specification for more detailed information, which can be obtained from ODVA.

8.1.1 Identity object (class code 01)

Table 8-3 1.1 Instance attributes

ID	Attribute	Access rule	Data type	Description
1	Vendor ID	Get	UINT	562 (Phoenix Contact)
2	Device Type	Get	UINT	44 (Managed Ethernet Switch device)
3	Product Code	Get	UINT	8400 (FL SWITCH 7008-EIP) 8401 (FL SWITCH 7006/2FX-EIP) 8402 (FL SWITCH 7005/FX-2FXSM-EIP) 8403 (FL SWITCH 7004-4GC-EIP) 8404 (FL SWITCH 7006-2GC-EIP) 8405 (FL SWITCH 7004-2TC-2GC-EIP)
4	Revision	Get	STRUCT of:	Revision of the item represented by the Identity object
	Major Revision		USINT	Major revision of the device
	Minor Revision		USINT	Minor revision of the device
5	Status	Get	WORD	Bit 0
				Bit 1
				Bit 2
				Bit 3
6	Serial Number	Get	UDINT	Serial number of the device
7	Product Name	Get	SHORT_STRING	Product name of the device

Table 8-4 1.2 Services

Service code	Class	Instance	Name of service
0x01	X	X	Get_Attribute_All
0x05	X	X	Reset
0x0E	X	X	Get_Attribute_Single

Table 8-5 1.2.1 Reset services

Value	Description
0	Normal reset without modifications to the device configuration
1	Reset to factory default
2	The device will execute the following steps: – Save IP address, subnet mask, and gateway to temporary location – Clear the configuration database/configuration file – Restore saved IP parameters – Save configuration (now only containing IP parameters)

8.1.2 Message Router object (class code 02)

Table 8-6 2.1 Class attributes

ID	Attribute	Access rule	Data type	Description
1	Revision	Get	UINT	Revision of this object
2	Max Instance	Get	UINT	Maximum instance number of this object
3	Number of Instance	Get	UINT	Instance number of this object
4	Optional attribute List	Get	STRUCT of:	List of optional instance attributes utilized in an object class implementation
	Number of attributes		UINT	Number of attributes in the optional attribute list
	Optional attributes		ARRAY of UINT	List of optional attribute numbers
5	Optional Service List	Get	STRUCT of:	List of optional services utilized in an object class implementation
	Number services		UINT	Number of services in the optional service list
	Optional services		ARRAY of UINT	List of optional service codes
6	Maximum ID Number Instance class Attributes	Get	UINT	Attribute ID number of the last class attribute of the class definition implemented in the device
7	Maximum ID Number Instance Attributes	Get	UINT	Attribute ID number of the last instance attribute of the class definition implemented in the device

Table 8-7 2.2 Instance attributes

ID	Attribute	Access rule	Data type	Description
1	Object_list	Get	STRUCT of:	List of supported objects
	Number		UINT	Number of supported classes in the class array
	Classes		ARRAY OF UINT	List of supported class codes
2	Number available	Get	UINT	Maximum number of supported connections

Table 8-8 2.3 Services

Service code	Class	Instance	Name of service
0x01	X	X	Get_Attribute_All
0x0E	X	X	Get_Attribute_Single
0x0A		X	Multiple_Service_Packet

8.1.3 Connection Manager object (class code 06)

Table 8-9 3.1 Class attributes

ID	Attribute	Access rule	Data type	Description
1	Revision	Get	UINT	Revision of this object
2	Max Instance	Get	UINT	Maximum instance number of this object
3	Number of Instance	Get	UINT	Instance number of this object
4	Optional attribute List	Get	STRUCT of:	List of optional instance attributes utilized in an object class implementation
	Number of attributes		UINT	Number of attributes in the optional attribute list
	Optional attributes		ARRAY of UINT	List of optional attribute numbers
6	Maximum ID Number Instance class Attributes	Get	UINT	Attribute ID number of the last class attribute of the class definition implemented in the device
7	Maximum ID Number Instance Attributes	Get	UINT	Attribute ID number of the last instance attribute of the class definition implemented in the device

Table 8-10 3.2 Instance attributes

ID	Attribute	Access rule	Data type	Description
1	Open Requests	Get/Set	UINT	Number of Forward Open service requests received
2	Open Format Rejects	Get/Set	UINT	Number of Forward Open service requests which were rejected due to bad format
3	Open Resources Rejects	Get/Set	UINT	Number of Forward Open service requests which were rejected due to lack of resources
4	Open Other Rejects	Get/Set	UINT	Number of Forward Open service requests which were rejected for reasons other than bad format or lack of resources
5	Close Requests	Get/Set	UINT	Number of Forward Close service requests received
6	Close Format Rejects	Get/Set	UINT	Number of Forward Close service requests which were rejected due to bad format
7	Close other Rejects	Get/Set	UINT	Number of Forward Close service requests which were rejected for reasons other than bad format or lack of resources
8	Connection Timeouts	Get/Set	UINT	Total number of connection timeouts that have occurred in connections controlled by this connection manager

Table 8-11 3.3 Services

Service code	Class	Instance	Name of service
0x01	X	X	Get_Attribute_All
0x02	-	X	Set_Attribute_All
0x0E	X	X	Get_Attribute_Single
0x10	-	X	Set_Attribute_Single

8.1.4 TCP/IP Interface object (class code F5)

Table 8-12 4.1 Class attributes

ID	Attribute	Access rule	Data type	Description
1	Revision	Get	UINT	Revision of this object

Table 8-13 4.2 Instance attributes

ID	Attribute	Access rule	Data type	Description	
1	Status	Get	DWORD	Bit 0-3	Interface configuration status
				Bit 4	Mcast pending (always 0)
				Bit 5	Interface configuration pending
				Bit 6	AcdStatus
				Bit 7	AcdFault
2	Configuration Capability	Get	DWORD	Bit 0	BOOTP client
				Bit 2	DHCP client
				Bit 4	TCP/IP config settable via ETH/IP
				Bit 7	AcdCapable
3	Configuration Control	Get/Set	DWORD	Bit 0-3	0 = The device uses static IP configuration 1 = The device uses BOOTP 2 = The device uses DHCP
4	Physical Link Object	Get	STRUCT of:	Path to Physical Link object	
	Path Size		UINT	4	
	Path		Padded EPATH	0x20, 0xF6, 0x25, 0x01	
5	Interface Configuration	Get/Set	STRUCT of:	TCP/IP network interface configuration	
	IP Address		UDINT	Device IP address	
	Network Mask		UDINT	Device network mask	
	Gateway Address		UDINT	Default gateway address	
	Name Server		UDINT	Primary server name (always 0.0.0.0)	
	Name server 2		UDINT	Secondary server name (always 0.0.0.0)	
	Domain Name		STRING	Default domain name (always empty)	
6	Host Name	Get/Set	STRING	Device host name	
10	SelectedAcd	Set	BOOL	Activates the use of ACD	
11	LastConflictDetected	Set	STRUCT of:	Structure containing information relating to the last conflict detected	
	AcdActivity		USINT	State of ACD activity when last conflict was detected	
	RemoteMAC		Array of 6 USINT	MAC address of remote node from the ARP PDU in which a conflict was detected	
	ArpPdu		ARRAY of 28 USINT	Copy of the raw ARP PDU in which a conflict was detected	

Table 8-14 4.3 Services

Service code	Class	Instance	Name of service
0x01	X	X	Get_Attribute_All
0x02	-	X	Set_Attribute_All
0x0E	X	X	Get_Attribute_Single
0x10	-	X	Set_Attribute_Single

8.1.5 Ethernet Link object (class code F6)

Table 8-15 5.1 Class attributes

ID	Attribute	Access rule	Data type	Description
1	Revision	Get	UINT	Revision of this object
2	Max Instance	Get	UINT	Maximum number of an object currently created in this device class level
3	Number of Instances	Get	UINT	Number of instances currently created in this device class

Table 8-16 5.2 Instance attributes

ID	Attribute	Access rule	Data type	Description	
1	Interface Speed	GET	UDINT	Interface speed currently in use. Speed in Mbps (e.g., 10, 100).	
2	Interface Flags	GET	DWORD	Bit 0	Link state
				Bit 1	Duplex mode
				Bit 2-4	Auto negotiation status 0 = Auto negotiation in progress 2 = Auto negotiation failed but detected speed 3 = Successfully negotiated 4 = Auto negotiation not attempted
				Bit 5	Not supported
				Bit 6	Not supported
3	Physical Address	GET	ARRAY of 6 USINTs	Physical MAC address of the device	
7	Interface Type	GET	USINT	Type of interface 2 = Twisted pair 3 = Optical fiber	

Table 8-16 5.2 Instance attributes

ID	Attribute	Access rule	Data type	Description
8	Interface State	GET	USINT	State of interface 0 = Unknown interface state 1 = Interface enabled 2 = Interface disabled
9	Admin State	SET	USINT	1 = Enable interface 2 = Disable interface
10	Interface Label	GET	STRING	Interface name

Table 8-17 5.3 Services

Service code	Class	Instance	Name of service
0x01	X	X	Get_Attribute_All
0x0E	X	X	Get_Attribute_Single
0x10	-	X	Set_Attribute_Single

8.1.6 Device Level Ring (DLR) object (class code 47)

Table 8-18 6.1 Class attributes

ID	Attribute	Access rule	Data type	Description
1	Revision	Get	UINT	Revision of this object

Table 8-19 6.2 Instance attributes

ID	Attribute	Access rule	Data type	Description
1	Network Topology	Get	USINT	0 = Linear 1 = Ring
2	Network Status	Get	USINT	0 = Normal 1 = Ring fault 2 = Unexpected loop detected 3 = Partial network fault 4 = Rapid fault/restore cycle
3	Ring Supervisor Status	Get	USINT	0 = Device is backup device 1 = Device is active ring supervisor 2 = Device is a normal ring node 3 = Device is in a non-DLR topology 4 = Device cannot support the operating ring parameters (beacon interval and/or beacon timeout)

Table 8-19 6.2 Instance attributes

ID	Attribute	Access rule	Data type	Description
4	Ring Supervisor Config	Set	STRUCT of:	Ring supervisor configuration parameters
			BOOL	Ring supervisor enable
			USINT	Ring supervisor precedence
			UDINT	Beacon interval
			UDINT	Beacon timeout
			UINT	DLR VLAN ID
5	Ring Faults Count	Get	UINT	Number of ring faults since power up
6	Last Active Node on Port 1	Get	STRUCT of:	Last active node at the end of chain through port 1 of active ring supervisor during ring fault
			UDINT	Device IP address
			ARRAY of 6 USINTs	Device MAC address
7	Last Active Node on Port 2	Get	STRUCT of:	Last active node at the end of chain through port 2 of active ring supervisor during ring fault
			UDINT	Device IP address
			ARRAY of 6 USINTs	Device MAC address
8	Ring Protocol Participants Count	Get	UINT	Number of devices in ring protocol participant list
9	Ring Protocol Participants List	Get	ARRAY of	List of device participants in ring protocol
			STRUCT of:	
			UDINT	Device IP address
			ARRAY of 6 USINTs	Device MAC address
10	Active Supervisor Address	Get	STRUCT of:	IP and/or MAC address of the active ring supervisor
			UDINT	Supervisor IP address
			ARRAY of 6 USINTs	Supervisor MAC address
11	Active Supervisor Precedence	Get	USINT	Precedence value of the active ring supervisor
12	Capability Flags	Get	DWORD	Describes the DLR capabilities of the device (1)

Table 8-20 6.3 Services

Service code	Class	Instance	Name of service
0x01	X	X	Get_Attribute_All
0x0E	X	X	Get_Attribute_Single
0x10	-	X	Set_Attribute_All
0x18		X	Get_Member

Table 8-21 6.4 Services

Service code	Class	Instance	Name of service
0x4B	-	X	Verify_Fault_Location
0x4C	-	X	Clear_Rapid_Faults
0x4D	-	X	Restart_Sign_On

8.1.7 Simple Network Management (SNMP) object (class code 0x52)

Table 8-22 7.1 Class attributes

ID	Attribute	Access rule	Data type	Description
1	Revision	Get	UINT	Revision of this object

Table 8-23 7.2 Instance attributes

ID	Attribute	Access rule	Data type	Description
1	SnmpAgent	Get	USINT	Status of the SNMP agent
2	SnmpAgentVersion	Get	USINT	Version of SNMP agent provided (1 = SNMPv1, 3 = SNMPv3; 31 = SNMPv1 + v3)
3	Primary Network Management Identifier	Get	STRUCT of:	Network address of primary network manager
	Identifier Format		USINT	Type of identifier
	Identifier		STRING	Value of identifier
4	Secondary Network Management Identifier	Get	STRUCT of:	Network address of primary network manager
	Identifier Format		USINT	Type of identifier
	Identifier		STRING	Value of identifier
5	Notifications	Get	BOOL	Indicates if the SNMP agent will enable sending of notifications 5
6	TrapType	Get	USINT	Indicates which trap type the SNMP agent will send 6

Table 8-24 7.3 Services

Service code	Class	Instance	Name of service
0x0E	-	X	Get_Attribute_Single

Table 8-25 7.4 Specific services

Service code	Class	Instance	Name of service
0x0E	X	X	Get_Attribute_Single

8.1.8 QoS object (class code 48)

Table 8-26 8.1 Class attributes

ID	Attribute	Access rule	Data type	Description
1	Revision	Get	UINT	Revision of this object

Table 8-27 8.2 Instance attributes

ID	Attribute	Access rule	Data type	Description
4	DSCP Urgent	Set	USINT	DSCP value for CIP transport class 0/1 urgent priority messages
5	DSCP Schedule	Set	USINT	DSCP value for CIP transport class 0/1 scheduled priority messages
6	DSCP High	Set	USINT	DSCP value for CIP transport class 0/1 high priority messages
7	DSCP Low	Set	USINT	DSCP value for CIP transport class 0/1 low priority messages
8	DSCP Explicit	Set	USINT	DSCP value for CIP explicit messages (transport class 2/3 and UCMM) and all other EtherNet/IP™ encapsulation messages

Table 8-28 8.3 Services

Service code	Class	Instance	Name of service
0x0E	X	X	Get_Attribute_Single
0x10		X	Set_Attribute_Single

Table 8-29 8.4 Services

Service code	Class	Instance	Name of service
0x0E	-	X	Get_Attribute_Single
0x10	-	X	Set_Attribute_Single

8.1.9 Base Switch object (class code 51)

Table 8-30 9.1 Class attributes

ID	Attribute	Access rule	Data type	Description
1	Revision	Get	UINT	Revision of this object

Table 8-31 9.2 Instance attributes

ID	Attribute	Access rule	Data type	Description	
1	Device Up Time	Get	UDINT	Revision of this object	
2	Total port count	Get	UDINT	Number of physically available ports	
3	System Firmware Version	Get	SHORT_STRING	Human readable representation of system firmware version	
4	Power Source	Get	Word	Bit 0-1	Status of switch power source 1 00 = Not present 01 = Not powered 11 = Powered and OK
				Bit 2-3	Status of switch power source 2 00 = Not present 01 = Not powered 11 = Powered and OK
5	Port Mask Size	Get	UINT	Number of DWORDs in port array attributes	
6	Existing Ports	Get	ARRAY OF DWORD	Port mask Indicates whether a port is absent or present	
7	Global Port Admin State	Get, Set	ARRAY of DWORD	Port admin status	
8	Global Port Link Status	Get	ARRAY of DWORD	Port link status	
9	System Boot Loader Version	Get	SHORT_STRING	Human readable representation of system firmware version	
10	Contact Status	Get	WORD	Switch contact closure	

Table 8-32 9.3 Services

Service code	Class	Instance	Name of service
0x0E	X	X	Get_Attribute_Single

Table 8-33 9.4 Services

Service code	Class	Instance	Name of service
0x0E	-	X	Get_Attribute_Single
0x10	-	X	Set_Attribute_Single

8.1.10 Assembly object

Table 8-34 10.1 Class attributes

ID	Attribute	Access rule	Data type	Description
1	Revision	Get	UINT	Revision of this object
2	Max Instance	Get	UINT	Maximum instance number of this object
3	Number of Instance	Get	UINT	Instance number of this object
4	Optional attribute List	Get	STRUCT of:	List of optional instance attributes utilized in an object class implementation
	Number of attributes		UINT	Number of attributes in the optional attribute list
	Optional attributes		ARRAY of UINT	Optional attributes
6	Maximum ID Number Instance class Attributes	Get	UINT	Attribute ID number of the last class attribute of the class definition implemented in the device
7	Maximum ID Number Instance Attributes	Get	UINT	Attribute ID number of the last instance attribute of the class definition implemented in the device

Table 8-35 10.3 Services

Service code	Class	Instance	Name of service
0x0E	X	X	Get_Attribute_Single
0x10	-	X	Set_Attribute_Single

8.1.11 Input Assemblies

Connection ID: T->O: 101: Input assembly

Table 8-36 11.1 Input assemblies

Description	Length of data	Data format	Remarks
Port admin mode	4 Bytes	Array of USINT values (1 = enabled)	LSB = Any port summary bit LSB + 1 = Port 1 E.g., 0x05 means at least one port enabled and port 2 enabled
Port link status	4 Bytes	Array of USINT values (1 = link up)	LSB = Any port summary bit LSB + 1 = Port 1 E.g., 0x05 means at least one port has link up and port 2 has link up
Padding	24 Bytes	-	Reserved for further binary port information, e.g. Redundancy information Fast Startup Information Port Access violation detected Port Thresholds exceeded Link Monitoring failure
Port RX utilization percentage	24 bytes	USINT Values representing utilization percentage	1st byte representing port 1; if less than 24 bytes are supported, further bytes will be padding bytes
Port TX utilization percentage	24 Bytes	USINT Values representing utilization percentage	1st byte representing port 1; if less than 24 bytes are supported, further bytes will be padding bytes
Alarm contact status	1 byte	Array of USINT values (1 = contact open = fail condition)	Value similar to EIP Base Switch object (51hex) instance attribute 10
Power supply status	1 byte	Array of USINT values (1 = power supply present)	Value similar to EIP Base Switch object (51hex) instance attribute 4
DLR supervisor status	1 byte	USINT Value	Value similar to EIP DLR object (47hex) instance attribute 3
DLR network status	1 byte	USINT Value	Value similar to EIP DLR object (47hex) instance attribute 2
Padding	4 Bytes	-	Reserved for RSTP status

Connection ID: T->O: 104: Input assembly

Table 8-37 11.1 Input assemblies

Description	Length of data	Data format	Remarks
Port admin mode	4 Bytes	Array of USINT values (1 = enabled)	LSB = Any port summary bit LSB + 1 = Port 1 E.g., 0x05 means at least one port enabled and port 2 enabled
Port link status	4 Bytes	Array of USINT values (1 = link up)	LSB = Any port summary bit LSB + 1 = Port 1 E.g., 0x05 means at least one port has link up and port 2 has link up
Padding	24 Bytes	-	Reserved for further binary port information, e.g. Redundancy information Fast Startup Information Port Access violation detected Port Thresholds exceeded Link Monitoring failure
Port RX utilization percentage	24 bytes	USINT Values representing utilization percentage	1st byte representing port 1; if less than 24 bytes are supported, further bytes will be padding bytes
Port TX utilization percentage	24 Bytes	USINT Values representing utilization percentage	1st byte representing port 1; if less than 24 bytes are supported, further bytes will be padding bytes
Alarm contact status	1 byte	Array of USINT values (1 = contact open = fail condition)	Value similar to EIP Base Switch object (51hex) instance attribute 10
Power supply status	1 byte	Array of USINT values (1 = power supply present)	Value similar to EIP Base Switch object (51hex) instance attribute 4
DLR supervisor status	1 byte	USINT Value	Value similar to EIP DLR object (47hex) instance attribute 3
DLR network status	1 byte	USINT Value	Value similar to EIP DLR object (47hex) instance attribute 2
Padding	4 Bytes	-	Reserved for RSTP status
DLR Ring Fault Count	2 Bytes	Array of USINT	Value similar to EIP DLR object (47hex) instance attribute 5
Last Node Port 1 - IP Address	4 Bytes	Array of USINT	Value similar to EIP DLR Object (47hx) Instance Attribute 6 part 1

Table 8-37 11.1 Input assemblies

Description	Length of data	Data format	Remarks
Last Node Port 1 - MAC ID	6 Bytes	Array of USINT	Value similar to EIP DLR Object (47hx) Instance Attribute 6 part 2.
Last Node Port 2 - IP Address	4 Bytes	Array of USINT	Value similar to EIP DLR Object (47hx) Instance Attribute 7 part 1.
Last Node Port 2 - MAC ID	6 Bytes	Array of USINT	Value similar to EIP DLR Object (47hx) Instance Attribute 7 part 2.
Verify Fault Location Status	2 Bytes	Array of USINT	Byte 0 : 1 = Operation in progress 0 = Operation ended (Default) Byte 1 : 0 = Operation Successful (Default) 1 = ERROR 0x0C = Object State Conflict
Reset Node State Status	1 byte	USINT	Byte 1 : 0 = Operation Successful (Default) 0x0C = Object State Conflict
Clear Fault Counter Status	1 byte	USINT	Byte 1 : 0 = Operation Successful (Default) This value is always 0 and is reserved for future usage.
Padding	30 Bytes	Array of USINT	Reserved for future usage

8.1.12 Output Assemblies

Connection ID: O->T: 100: Output assembly

Description	Length of data	Data format	Remarks
Admin port status	4 Bytes	Array of USINT-values (1 = enabled)	LSB = Disable all ports e.g. 0x0E means only ports 1, 2 and 3 are enabled NOTE: Due to the cyclic character of this data the controller will overwrite all settings done by other UIs (WEB, SNMP, etc.) in a cyclic manner. Triggering a save operation by any UI will save the current value issued by the controller.

Connection ID: O->T: 103: Output assembly

Description	Length of data	Data format	Remarks
Admin port status	4 Bytes	Array of USINT-values (1 = enabled)	LSB = Disable all ports e.g. 0x0E means only ports 1, 2 and 3 are enabled NOTE: Due to the cyclic character of this data the controller will overwrite all settings done by other UIs (WEB, SNMP, etc.) in a cyclic manner. Triggering a save operation by any UI will save the current value issued by the controller.
DLR Services	1 byte	USINT	Bit 0 : Verify Fault Location 1 = Trigger the event 0 = No Trigger(Default) Bit 1 : Reset Node State (Clear Rapid Fault) 1 = Trigger the event 0 = No Trigger(Default) Bit 2 : Clear Fault Counter 1 = Trigger the event 0 = No Trigger(Default) Bit 3 - 7 : Reserved.
Padding	30 Bytes	Array of USINT	Reserved for future usage.

8.1.13 Configuration Assemblies

Connection ID: O->T: 102: Configuration Assembly

Description	Length of data	Data format	Remarks
IP Address	4 Bytes	Array of USINT	Default 0. Value valid only when IP Address Assignment is static(1)
Subnet	4 Bytes	Array of USINT	Default 0. Value valid only when IP Address Assignment is static(1)
Default Gateway	4 Bytes	Array of USINT	Default 0. Value valid only when IP Address Assignment is static(1)
IP Address Assignment	1 byte	USINT	1 = STATIC 2 = BOOTP (Default) 3 = DHCP
RSTP	1 byte	USINT	2 = Enable (Default) 1 = Disable
DLR Device Mode	1 byte	USINT	1 = Disable (Default) 2 = Node 3 = Supervisor
DLR Ring Port 1	1 byte	USINT	1 (default)
DLR Ring Port 2	1 byte	USINT	2 (default)

Description	Length of data	Data format	Remarks
DLR VLAN	2 Bytes	Array of USINT	1 (default)
Beacon interval	4 Bytes	Array of USINT	400 (default)
Beacon timeout	4 Bytes	Array of USINT	1960 (default)
Supervisor Precedence	2 Bytes	Array of USINT	**Byte 0:** 0 - No-change // 1 - change **Byte 1**: Supervisor Precedence value 0 (default)
Alarm Contact 1	1 byte	USINT	2 = Enable (Default) 1 = Disable
Alarm Contact Trigger 1	2 Bytes	Array of USINT	**Byte 0** Bit 0: 0 - No-change // 1 - change Bit 1: Power Supply Lost Bit 2: Monitored Link Down Bit 3: Plugable Memory Missing Bit 4: DLR Ring Failure Bit 5: Port Security Violation **Byte 1** Reserved
Alarm Contact 2	1 byte	USINT	2 = Enable (Default) 1 = Disable
Alarm Contact Trigger 1	2 Bytes	Array of USINT	**Byte 0** Bit 0: 0 - No-change // 1 - change Bit 1: Power Supply Lost Bit 2: Monitored Link Down Bit 3: Plugable Memory Missing Bit 4: DLR Ring Failure Bit 5: Port Security Violation **Byte 1:** Reserved
Port Status (1 - 8)	4 Bytes	Array of USINT	LSB = 0 - No-change // 1 - change (e.g. 0x0F means only ports 1, 2 and 3 are enabled) Bits 1 - 8: Ports 1- 8 Bits 9 - 23: Reserved

Description	Length of data	Data format	Remarks
Port Mode (1 - 8)	16 Bytes	Array of USINT each for a port	1: Autoneg (Default) 2: Half-10 3: full-10 4: half-100 5:f ull-100 6: fast-startup **Byte 0 - 7:** Ports 1 - 8 **Byte 8 - 15:** Reserved
Link Monitoring (1 - 8)	4 Bytes	Array of USINT	LSB = 0 - No-change // 1 - change (e.g. 0x0F means only ports 1, 2 and 3 are enabled) Bits 1 - 8: Ports 1- 8 Bits 9 - 23: Reserved
Default Priority(1 - 8)	17 Bytes	Array of USINT each for a port	**Byte 0:** 0 - No-change // 1 - change **Byte 9 - 17:** Reserved 0 (default)
Port Mirroring	1 byte	USINT	2 = Enable 1 = Disable (default)
Destination Mirror Port	1 byte	USINT	1 (default)
Mirrored Virtual Ports	2 Bytes	Array of USINT	LSB Bit 0: DLR port #56 Bits 1-15: Reserved 0: Disable 1: Enable Rx and Tx
Mirrored Ports (1 - 8)	4 bytes	Array of USINT	LSB = 0 - No-change 1 - Change (e.g. 0x0F means only ports 1, 2 and 3 are enabled) 0x00 (default) Bits 1 - 8: Ports 1- 8 Bits 9 - 23: Reserved 0: Disable 1: Enable Rx and Tx
Padding	28 Bytes	Array of USINT	

8.1.14 Power source and link status assembly

Connection ID: 1: Power source and link status assembly

Table 8-38 13.1 Power source and link status assembly

Byte	Data type	Description
0	BYTE	Power source status (least significant byte)
1	BYTE	Power source status (most significant byte)
2 - 5	DWORD	Global link status (ports 1 - 4)
6 - 9	DWORD	Global link status (ports 5 - 8)

9 Multicast Filtering

9.1 Multicast Configuration

9.1.0.1 Multicast Filtering

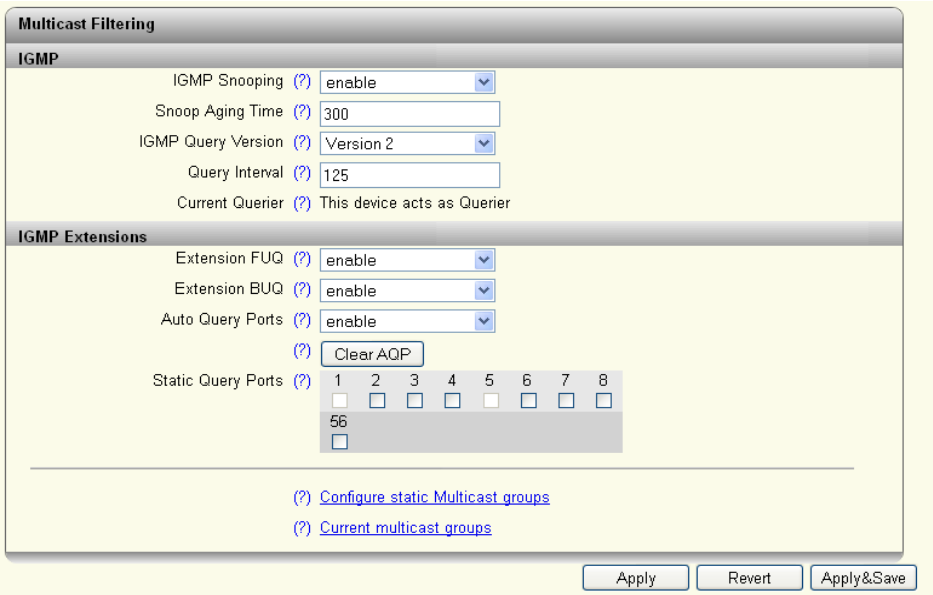

Figure 9-1 “Multicast Filtering” web page

IGMP Snooping:

– disable: the “IGMP Snooping” function is disabled
– enable: the “IGMP Snooping” function is enabled

Snoop Aging Time: The snoop aging time can be set here. The snoop aging time is the time period during which membership reports are expected from the querier. If no membership reports are received during this time, the associated ports are deleted from the multicast groups. The value must be between 30 and 3600 (default: 300).

IGMP Query Version: You can set the IGMP query version which the switch should use to send the queries here.

Query Interval: Set the interval in which the switch should send the queries here.

Current Querier: This displays the IP address of the current querier in the network.

Extension FUQ (Forward Unknown to Querier): Select here whether a multicast group should be created for unknown multicast packets which forwards the packets in the direction of the querier.

Extension BUQ (Block Unknown at Querier): Select here whether unknown multicast packets should be blocked at the querier.

Auto Query Ports: Here you can set whether automatic selection of additional query ports is activated by means of fast ring detection and/or DLR. Ports are automatically integrated in every multicast group. In the case of redundancy switch-over, the multicast packets are not blocked because the ports required are already members of the multicast group.

Clear AQP: A button for deleting the ports that are automatically assigned to the groups.

Static Query Ports: Select which ports are static query ports.

Clicking on the “Configure static Multicast Groups” button takes you to the web page for creating static multicast groups.

Pop-up: Configure static Multicast groups

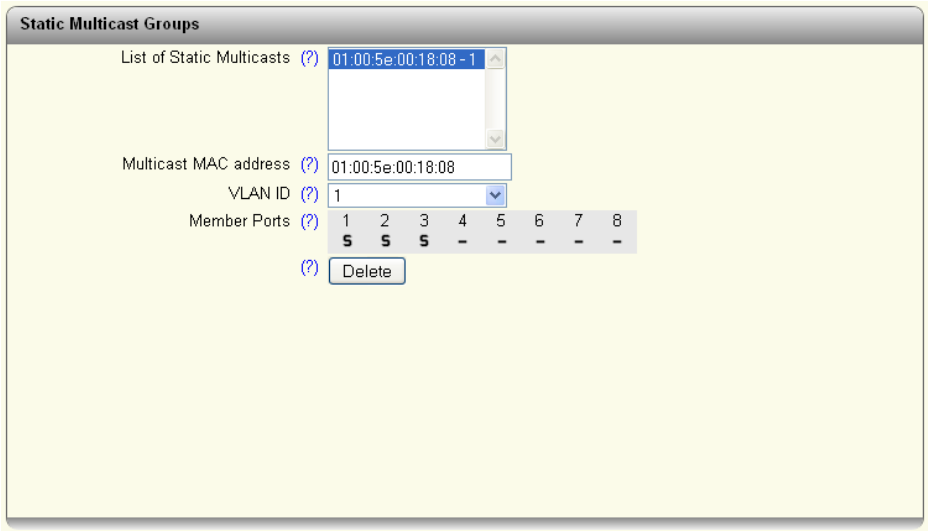

Figure 9-2 “Static Multicast Groups” web page

List of Static Multicasts: List of all static multicast groups is created.

Multicast MAC address: Enter the multicast MAC address here.

VLAN ID: Enter the VLAN here.

Member Ports: Select the ports which should be entered into the multicast group here.

– S: Static – static member of the multicast group.
– F: Forbidden – the port cannot be dynamically added to multicast groups. As such, the port is always excluded from the multicast group.
– -: No Member – not a member of the multicast group.
– Delete: The selected multicast group is deleted.

You can create up to 32 static multicast groups.

Clicking on the “Current Multicast Groups” link opens the “Current Multicast Groups” web page as a pop-up.

The device can manage up to 512 dynamic multicast groups.

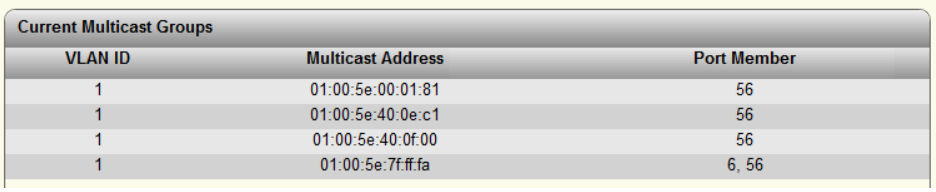

Current Multicast Groups

VLAN ID	Multicast Address	Port Member
1	01:00:5e:00:01:81	56
1	01:00:5e:40:0e:c1	56
1	01:00:5e:40:0f:00	56
1	01:00:5e:7f:ff:fa	6, 56

Figure 9-3 “Current Multicast Groups” web page

10 Virtual Local Area Network - VLAN

10.0.0.1 VLAN Configuration

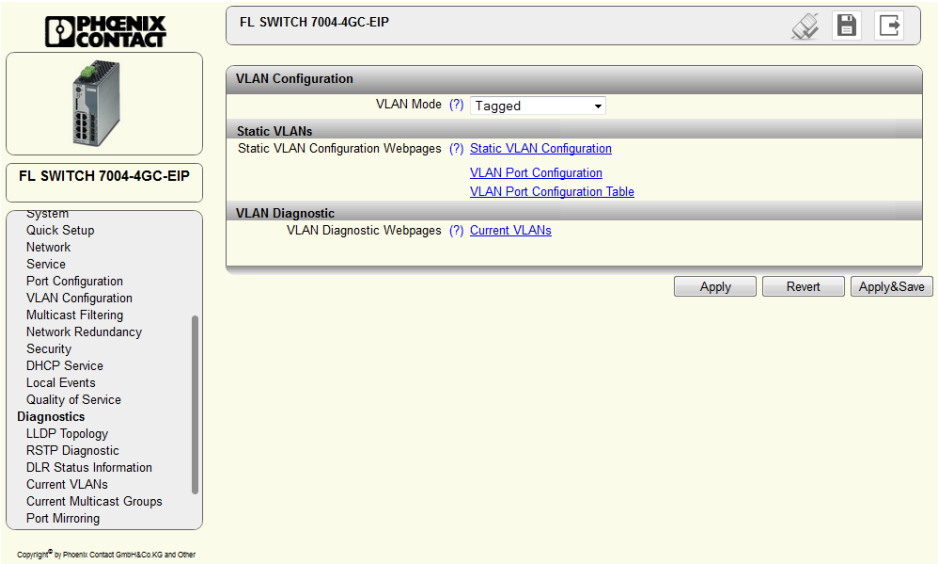

Figure 10-1 “VLAN Configuration” web page

VLAN Mode:

– Transparent: in “Transparent” mode, the switch processes the incoming data packets as described in the “Frame switching” section. Neither the structure nor the contents of the data packets are changed. The information about VLAN assignment from a tag that may be contained in the data packet is ignored.
– Tagged: In “Tagged” mode, the switch forwards the data packets depending on the VLAN assignment.

Clicking on the “Static VLAN Configuration” button takes you to the “Static VLAN Configuration” page. Up to 32 static VLANs can be set up here.

Pop-up: Static VLAN Configuration

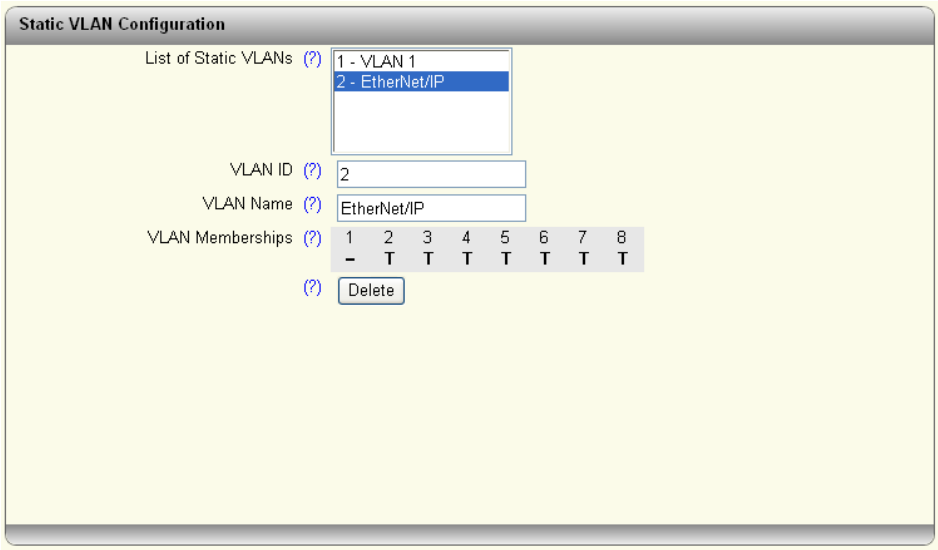

Figure 10-2 “Static VLAN Configuration” web page

List of Static VLANs: All VLANs created up to this point are displayed here.

VLAN ID: Set the VLAN ID which you wish to assign to the new VLAN here. The value must be between 2 and 4095.

VLAN Name: Specify the name of the VLAN which you wish to create here.

VLAN Memberships: Specify which ports should be located in the VLAN.

– T: tagged port
– U: untagged port
– -: not a member of the VLAN

Use the “Delete” button to delete the VLAN selected in the list.

VLAN 1 cannot be deleted.

Clicking on the “VLAN port configuration” button takes you to the “VLAN Port configuration” page.

Pop-up: VLAN Port configuration

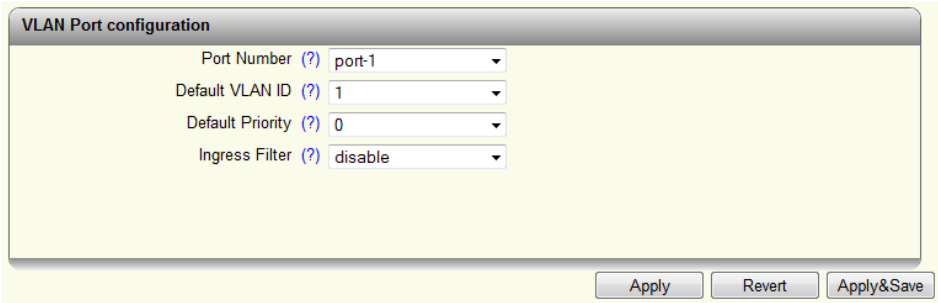

Figure 10-3 “VLAN Port configuration” web page

Port number: Enter the port for which you wish to change the VLAN settings.

Default VLAN ID: Set the VLAN ID to which the port should be assigned here.

Default Priority: Set the VLAN priority for the selected port here.

Ingress Filter: Set here whether the ingress filter should be activated.

Clicking on the “VLAN Port Table” button takes you to the VLAN port table.

Pop-up: VLAN Port Configuration Table

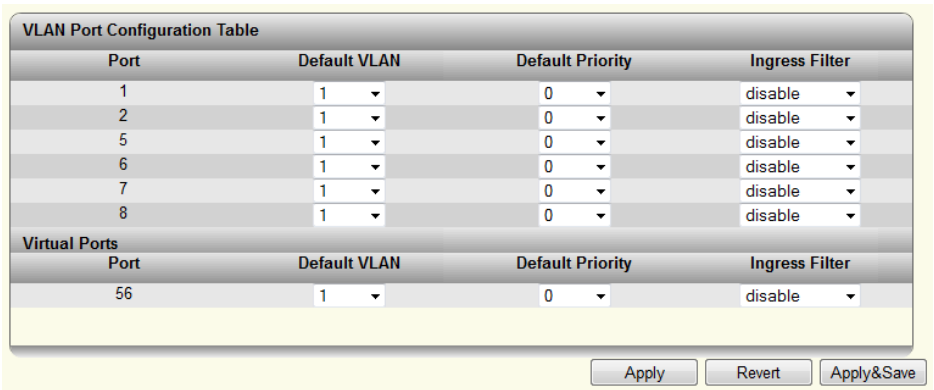

Figure 10-4 “VLAN Port Configuration Table” web page

Clicking on the “Current VLANs” link opens the “Current VLANs” web page as a pop-up.

Current VLANs

This page lists the current VLANs and displays the ports for each VLAN, which are either “Tagged” or “Untagged”.

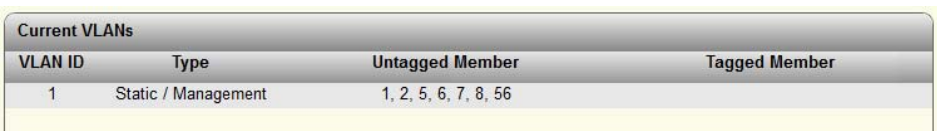

Figure 10-5 “Current VLANs” web page

11 Technical data and ordering data

11.1 Technical data

General data	
Function	Ethernet/Fast Ethernet/Gigabit Switch; conforms to standard IEEE 802.3/802.3u/802.3ab
Switch principle	Store and forward
Address table	16386 MAC addresses
SNMP	Version 2c, Version 3
Transmission capacity per port 64-byte packet size, half duplex	At 10 Mbps: 14880 pps (packets per second) At 100 Mbps: 148800 pps At 1000 Mbps: 1488000 pps
Supported MIBs	MIB II and private SNMP objects from Phoenix Contact
Housing dimensions (width x height x depth) in mm	60 x 130 x 136 (depth from top edge of DIN rail)
Permissible operating temperature	-40°C to 70°C
Permissible storage temperature	-40°C ... +85°C
Degree of protection	IP20, IEC 60529
Protection class	Class 3 VDE 0106; IEC 60536
Humidity	
Operation	10% to 95%, non-condensing
Storage	10% to 95%, non-condensing
Air pressure	
Operation	86 kPa to 108 kPa, 1500 m above sea level
Storage	66 kPa to 108 kPa, 3500 m above sea level
Ambient compatibility	Free from substances that would hinder coating with paint or varnish according to VW specification
Mounting position	Perpendicular to a standard DIN rail
Connection to protective earth ground	Snapped onto a grounded DIN rail
Weight	Up to 1010 g, typical

Supply voltage (US1/US2 redundant)	
Connection	Via COMBICON; maximum conductor cross section = 2.5 mm^2
Nominal value	24 V DC
Permissible voltage range	12 V DC to 58 V DC
Permissible ripple (within the permissible voltage range)	3.6 V_{PP}

Supply voltage (US1/US2 redundant) (Fortsetzung)	
Test voltage	500 V DC for 1 minute
Current consumption at US at 24 V DC, maximum	350 mA (FL SWITCH 7008-EIP) 470 mA (FL SWITCH 7006/2FX-EIP) 520 mA (FL SWITCH 7005/FX-2FXSM-EIP) 535 mA (FL SWITCH 7004-4GC-EIP) 520 mA (FL SWITCH 7006-2GC-EIP) 560 mA (FL SWITCH 7004-2TC-2GC-EIP)
Maximum power consumption	8.4 W (FL SWITCH 7008-EIP) 11.3 W (FL SWITCH 7006/2FX-EIP) 12.8 W (FL SWITCH 7005/FX-2FXSM-EIP) 12.9 W (FL SWITCH 7004-4GC-EIP) 12.5 W (FL SWITCH 7006-2GC-EIP) 13.5 W (FL SWITCH 7004-2TC-2GC-EIP)

Interfaces	
Number of Ethernet ports	8
Floating signal contact	
Voltage	12 - 58 V DC / 60 W, maximum
Current carrying capacity	100 mA, typical; 1 A, maximum

Ethernet interfaces	
General properties of the RJ45 ports	
Number	Up to 8 with auto crossing and auto negotiation
Connection format	8-pos. RJ45 socket on the switch
Connection medium	Twisted pair cable with a conductor cross section of 0.14 mm^2 to 0.22 mm^2
Cable impedance	100 ohms
Transfer rate	10/100/1000 Mbps (GB transfer only on GB combo ports)
Maximum network segment expansion	100 m
General properties of the fiberglass ports	
Number	up to 4
Connection format	SC format, SFP format
Connection medium	Fiberglass
Connecting plug	SC format, LC format (SFP module)
Transfer rate	100/1000 Mbps (GB transfer only on GB combo ports)
Laser protection class	1
Properties of 100 Mbps multi-mode ports in SC format	
Data transmission speed	100 Mbps, full duplex
Wavelength	1310 nm
Maximum transmission length	10 km fiberglass with F-G 50/125 µm 0.7 dB/km F1200 4.4 km fiberglass with F-G 50/125 µm 1.6 dB/km F800 17 km fiberglass with F-G 62.5/125 µm 0.7 dB/km F1000 4.6 km fiberglass with F-G 62.5/125 µm 2.6 dB/km F600
Transmission power	
Minimum	-19 dBm 62.5/125 µm -24 dBm 50/125 µm
Maximum	-14 dBm
Receiver sensitivity	

Ethernet interfaces (Fortsetzung)

Minimum	-34 dBm
Properties of 100 Mbps single-mode ports in SC format	
Data transmission speed	100 Mbps, full duplex
Wavelength	1310 nm
Maximum transmission length	44 km fiberglass with F-G 9/125 µm 0.36 dB/km 40 km fiberglass with F-G 9/125 µm 0.4 dB/km 32 km fiberglass with F-G 9/125 µm 0.5 dB/km
Transmission power	
Minimum	-15 dBm 9/125 µm
Maximum	-7 dBm
Receiver sensitivity	
Minimum	-34 dBm
Properties of the GB combo ports	
Data transfer rate (RJ45 port)	10/100/1000 Mbps
Max. transfer size (RJ45 port)	100 m
Data transfer rate (SFP port)	100/1000 Mbps (depending on the SFP module)
Wavelength (SFP port)	depending on SFP module
Maximum transmission length	80 km (depending on the SFP module)
Properties of the Fast Ethernet combo ports	
Data transfer rate (RJ45 port)	10/100 Mbps
Max. transfer size (RJ45 port)	100 m
Data transfer rate (SFP port)	100 Mbps
Wavelength (SFP port)	depending on SFP module
Maximum transmission length	40 km (depending on the SFP module)

Mechanical tests

Shock test as per IEC 60068-2-27	Operation: 30 g, half-sine shock pulse
Vibration resistance according to IEC 60068-2-6	Operation/storage/transport: 5 g, 10 Hz - 150 Hz
Free fall according to IEC 60068-2-32	1 m

Conformance with EMC Directives

Developed according to IEC 61000-6-2	
Noise emission according to EN 55022: 1998 + A1: 2000 + A2: 2003 (interference voltage)	Class A (industrial applications)
Noise emission according to EN 55011: 1998 + A1: 1999 + A2: 2002 (electromagnetic interference)	Class A (industrial applications)
Noise immunity according to EN 61000-4-2 (IEC 1000-4-2) (ESD)	Requirements according to DIN EN 61000-6-2
Contact discharge:	Test intensity 3, criterion B
Air discharge:	Test intensity 3, criterion A
Indirect discharge:	Test intensity 3, criterion A
Noise immunity according to EN 61000-4-3 (IEC 1000-4-3) (electromagnetic fields)	Requirements according to DIN EN 61000-6-2 Test intensity 3, criterion A

Conformance with EMC Directives	
Noise immunity according to EN 61000-4-6 (IEC 1000-4-6) (conducted)	Requirements according to DIN EN 61000-6-2 Test intensity 3, criterion A
Noise immunity according to EN 61000-4-4 (IEC 1000-4-4) (burst) Data cables: Power supply:	Requirements according to DIN EN 61000-6-2 Test intensity 3, criterion A Test intensity 3, criterion A
Noise immunity according to EN 61000-4-5 (IEC 1000-4-5) (surge) Data cables: Power supply:	Requirements according to DIN EN 61000-6-2 Test intensity 2, criterion A Test intensity 1, criterion A

Additional certifications	
RoHS	@EEE 2002/95/EC - WEEE 2002/96/EC

Differences between this version and previous versions
Rev. 00: initial version
Rev. 01: technical data updated
Rev. 02: new versions added
Rev. 03: general edit

11.2 Ordering data

Products

Description	Order designation	Order No.	Pcs./Pkt.
Managed Switch with eight Fast Ethernet ports in RJ45 format	FL SWITCH 7008-EIP	2701418	1
Managed switch with six Fast Ethernet ports in RJ45 format and two SC ports in SC format	FL SWITCH 7006/2FX-EIP	2701419	1
Managed Switch with five Fast Ethernet ports in RJ45 format, two single-mode ports and one multi-mode port in SC format	FL SWITCH 7005/FX-2FXSM-EIP	2701420	1
Managed Switch with four Fast Ethernet ports in RJ45 format and four Gigabit combo ports	FL SWITCH 7004-4GC-EIP	2701553	1
Managed Switch with six Fast Ethernet ports in RJ45 format and two Gigabit combo ports	FL SWITCH 7006-2GC-EIP	2701554	1
Managed Switch with four Fast Ethernet ports in RJ45 format, two Fast Ethernet combo ports, and four Gigabit combo ports	FL SWITCH 7004-2TC-2GC-EIP	2702175	1

Accessories

Description	Order designation	Order No.	Pcs./Pkt.
Program and configuration memory, plug-in, 512 Mbytes	SD FLASH 512MB	2988146	1
Universal end bracket	E/NS 35 N	0800886	1
FL Network Manager, SNMP-based configuration and firmware update software, for easy startup of Managed Switches	FL NETWORK MANAGER BASIC	2702889	1
Startup of Phoenix Contact network components and support for analysis, consultation/planning or configuration/startup together with a responsible person employed by the initiator	FL START-UP SUPPORT	2701279	-
Troubleshooting in an Ethernet communication network together with a responsible person employed by the initiator	FL MAINTENANCE SUPPORT	2701424	-
Training for network standards, Ethernet security or wireless with Phoenix Contact components	FL TRAINING	2701427	-
Gigabit SFP module for transmission up to 30 km with a wavelength of 1310 nm	FL SFP LX	2891767	1
Gigabit SFP module for transmission up to 1 km with a wavelength of 850 nm	FL SFP SX	2891754	1
Gigabit SFP module for transmission up to 80 km with a wavelength of 1550 nm	FL SFP LX LH	2989912	1
Gigabit SFP module for transmission up to 2 km with a wavelength of 1310 nm	FL SFP SX2	2702397	1
The narrow form-factor plug-in module provides a fiber optic interface with a data transmission speed of 100 Mbps with a wavelength of 1310 nm (long)	FL SFP FX	2891081	1
The narrow form-factor plug-in module provides a fiber optic interface with a data transmission speed of 100 Mbps with a wavelength of 1310 nm (long).	FL SFP FX SM	2891082	1
Fast Ethernet SFP WDM module for transmission up to a maximum of 20 km on a single fiber with a wavelength of 1310/1550 nm	FL SFP FE WDM20-A	2702437	1
Fast Ethernet SFP WDM module for transmission up to a maximum of 20 km on a single fiber with a wavelength of 1550/1310 nm.	FL SFP FE WDM20-B	2702438	1
Fast Ethernet SFP WDM set for transmission up to a maximum of 20 km on a single fiber with a wavelength of 1310/1550 nm	FL SFP FE WDM20-SET	2702439	1
Gigabit SFP WDM module for transmission up to a maximum of 10 km on a single fiber with a wavelength of 1310/1550 nm	FL SFP WDM10-A	2702440	1
Gigabit SFP WDM module for transmission up to a maximum of 10 km on a single fiber with a wavelength of 1310/1550 nm	FL SFP WDM10-B	2702441	1
Gigabit SFP WDM set for transmission up to a maximum of 10 km on a single fiber with a wavelength of 13101/1550 nm	FL SFP WDM10-SET	2702442	1
The FL DIN RA is installed in a standard, 19-inch rack (EIA-310-D, IEC 60297-3-100) to allow DIN rail mounted equipment to be rack mounted	FL DIN RA	2891053	1

Description (Fortsetzung)	Order designation	Order No.	Pcs./Pkt.
Network monitoring with HMI/SCADA systems	FL SNMP OPC SERVER V3	2701139	1
SNMP-based software in English, for detection and display of Ethernet networks with a maximum of 64 network nodes	FL VIEW 64	2701472	1
SNMP-based software in English, for detection and display of Ethernet networks with a maximum of 256 network nodes	FL VIEW 256	2701473	1
SNMP-based software in English, for detection and display of Ethernet networks with a maximum of 512 network nodes	FL VIEW 512	2701474	1
Fuse terminal block for cartridge fuse-link, cross section: 0.5 - 16 mm², AWG: 24 - 6, width: 12 mm, color: black	UK 10-DREHSILED 24 (5X20)	3005138	50
Lever-type fuse terminal block, black, for 5 x 20 mm cartridge fuse-links, with LED for 24 V DC	UT 4-HESILED 24 (5X20)	3046090	50
Thermomagnetic circuit breaker, 1-pos., for DIN rail mounting, 2 A	UT 6-TMC M 2A	0916605	6
FO patch cable, multimode, preconfigured, 1.0 m long, LC-LC connector	FL MM PATCH 1.0 LC-LC	2989158	1
FO patch cable, single mode, preconfigured, 1.0 m long, LC-LC connector	FL SM PATCH 1.0 LC-LC	2989187	1
FO patch cable, multimode, preconfigured, 1.0 m long, LC-SC connector	FL MM PATCH 1.0 LC-SC	2989161	1
FO patch cable, multimode, preconfigured, 1.0 m long, SC-SC connector	FL MM PATCH 1.0 SC-SC	2901805	1
FO patch cable, multimode, preconfigured, 1.0 m long, SC-ST connector	FL MM PATCH 1.0 SC-ST	2901809	1
FO patch cable, single mode, preconfigured, 1.0 m long, LC-SC connector	FL SM PATCH 1.0 LC-SC	2989190	1
FO patch cable, single mode, preconfigured, 1.0 m long, SC-SC connector	FL SM PATCH 1.0 SC-SC	2901829	1
FO patch cable, single mode, preconfigured, 1.0 m long, SC-ST connector	FL SM PATCH 1.0 SC-ST	2901832	1
Patch cable, CAT**6**, pre-assembled, 1.0 m long	FL CAT6 PATCH 1.0	2891385	10
Patch cable, CAT5, pre-assembled, 1.0 m long	FL CAT5 PATCH 1.0	2832276	10

HOTLINE:

If there are any problems that cannot be solved using this documentation, please call our hotline:


+ 49 - (0) 52 81 - 946 28 88

A Appendix for document lists

A 1 List of figures

Figure 1-1: Housing dimensions 7
Figure 1-2: Elements of the Fast Ethernet devices 8
Figure 1-3: Elements of the Gigabit devices 9
Figure 1-4: Device versions with combo ports 10
Figure 2-1: Snapping the device onto the DIN rail 13
Figure 2-2: Removing the device 14
Figure 2-3: Operating the device with one power supply (example) 15
Figure 2-4: Redundant operation with two power supplies (example) 15
Figure 2-5: Basic circuit diagram for the signal contact 16
Figure 2-6: Elements of the SFP modules 17
Figure 2-7: Inserting the SFP modules 18
Figure 3-1: Settings for the BootP server 21
Figure 3-2: BootP server 22
Figure 3-3: FL Network Manager with BootP/DHCP reservation list displayed 23
Figure 3-4: “IP Address Request Listener” window 24
Figure 3-5: “Set IP Address” window with incorrect settings 24
Figure 3-6: “Assign IP Address” window 25
Figure 5-1: Login window 29
Figure 5-2: Start page for web-based management 30
Figure 5-3: “Help & Documentation” web page 31
Figure 5-4: “Device Status” web page 32
Figure 5-5: “Technical Data” web page 32
Figure 5-6: “Local Diagnostics” web page 33
Figure 5-7: “Alarm & Events” web page 33
Figure 5-8: “Port Table” web page 34
Figure 5-9: “MAC Address Table” web page 34
Figure 5-10: “CIP Status Information” web page 35
Figure 5-11: “System” web page 35
Figure 5-12: “Firmware Update via HTTP” pop-up 36
Figure 5-13: “Firmware Update via TFTP” pop-up 37
Figure 5-14: “Advanced Configuration” pop-up 38
Figure 5-15: “Advanced Configuration” pop-up 39
Figure 5-16: “Security Context” pop-up 39

Figure 5-17: “Administrator Password” configuration area 40
Figure 5-18: “Quick Setup” web page 40
Figure 5-19: “Network” web page 42
Figure 5-20: ACD status information on the “Device Status” page 42
Figure 5-21: “Service” web page 43
Figure 5-22: “Port Configuration” web page 44
Figure 5-23: “Port Configuration Table” web page 45
Figure 5-24: “Link Aggregation” web page 45
Figure 5-25: “Configure Trunk” web page 46
Figure 5-26: “VLAN Configuration” web page 46
Figure 5-27: “Multicast Filtering” web page 47
Figure 5-28: “Spanning-Tree Configuration” configuration area 47
Figure 5-29: “RSTP Port Configuration” web page 48
Figure 5-30: “RSTP Port Configuration Table” web page 49
Figure 5-31: “Redundancy Port Table” web page 50
Figure 5-32: “Device Level Ring / IEEE 1588 Transparent Clock Configuration” web page 50
Figure 5-33: “DLR Node Table” web page 51
Figure 5-34: “Security” web page 52
Figure 5-35: “Port Based Security” web page 53
Figure 5-36: “DHCP Service” web page 54
Figure 5-37: “DHCP Port Local Service” pop-up 56
Figure 5-38: “Local Events” web page 56
Figure 5-39: “Quality of Service” web page 57
Figure 5-40: “Storm Control Configuration” web page 58
Figure 5-41: “Storm Control Configuration Table” web page 59
Figure 5-42: “LLDP Topology” web page 59
Figure 5-43: “RSTP Diagnostic” web page 60
Figure 5-44: “DLR Status Information” web page 61
Figure 5-45: “Port Mirroring” web page 62
Figure 5-46: “Trap Manager” web page 63
Figure 5-47: “Port Counter” web page 64
Figure 5-48: “Port Utilization” web page 64
Figure 5-49: “SFP Diagnostics” web page 65
Figure 6-1: Schematic view of SNMP 67
Figure 6-2: Tree structure of the MIB 70
Figure 7-1: Redundant coupling of two DLR rings via STP/RSTP 73
Figure 7-2: Meshed coupling of multiple DLR rings 74

Figure 7-3: Other possible topologies 75
Figure 9-1: “Multicast Filtering” web page 97
Figure 9-2: “Static Multicast Groups” web page 98
Figure 9-3: “Current Multicast Groups” web page 99
Figure 10-1: “VLAN Configuration” web page 101
Figure 10-2: “Static VLAN Configuration” web page 102
Figure 10-3: “VLAN Port configuration” web page 103
Figure 10-4: “VLAN Port Configuration Table” web page 103
Figure 10-5: “Current VLANs” web page 103

B 1 List of tables

Table 2-1: Pin assignment of RJ45 connectors ... 17
Table 3-1: Operating modes in Smart mode ... 20
Table 8-1: CIP communication types ... 77
Table 8-2: Devices and EDS file ... 77
Table 8-3: 1.1 Instance attributes ... 78
Table 8-4: 1.2 Services ... 78
Table 8-5: 1.2.1 Reset services ... 79
Table 8-6: 2.1 Class attributes ... 79
Table 8-7: 2.2 Instance attributes ... 80
Table 8-8: 2.3 Services ... 80
Table 8-9: 3.1 Class attributes ... 80
Table 8-10: 3.2 Instance attributes ... 81
Table 8-11: 3.3 Services ... 81
Table 8-12: 4.1 Class attributes ... 81
Table 8-13: 4.2 Instance attributes ... 82
Table 8-14: 4.3 Services ... 83
Table 8-15: 5.1 Class attributes ... 83
Table 8-16: 5.2 Instance attributes ... 83
Table 8-17: 5.3 Services ... 84
Table 8-18: 6.1 Class attributes ... 84
Table 8-19: 6.2 Instance attributes ... 84
Table 8-20: 6.3 Services ... 85
Table 8-21: 6.4 Services ... 86
Table 8-22: 7.1 Class attributes ... 86
Table 8-23: 7.2 Instance attributes ... 86
Table 8-24: 7.3 Services ... 86
Table 8-25: 7.4 Specific services ... 87
Table 8-26: 8.1 Class attributes ... 87
Table 8-27: 8.2 Instance attributes ... 87
Table 8-28: 8.3 Services ... 87
Table 8-29: 8.4 Services ... 87
Table 8-30: 9.1 Class attributes ... 88
Table 8-31: 9.2 Instance attributes ... 88
Table 8-32: 9.3 Services ... 88
Table 8-33: 9.4 Services ... 89
Table 8-34: 10.1 Class attributes ... 89

Table 8-35: 10.3 Services 89
Table 8-36: 11.1 Input assemblies 90
Table 8-37: 11.1 Input assemblies 91
Table 8-38: 13.1 Power source and link status assembly 96

C 1 Index

Numerics

24 V DC voltage 14
802.1w 47

A

ACD status 42
Address Conflict Detection 42
Address table 27, 105
Admin Cost 49
Admin Edge 49
Admin Path Cost 49
Administrator password 40
Agent 68
Air pressure 105
Alarm 33
Alarm contact 56
Ambient compatibility 105
ASN1 SNMP objects 68
Assembly object 89
Auto Edge 49
Auto Query Ports 98
Automation Profile 40

B

Base Switch object 88
Beacon interval 51
Beacon timeout 51
BootP 20
BootP request 20
BPDU packets 28
Bridge Forward Delay 48
Bridge Hello Time 48
Bridge Max Age 48
Bridge Priority 48

C

CIP 77
Class of Service 28
Clear AQP 98
Common Industrial Protocol 77
Connection Manager object 80
CoS 28
Coupling of multiple DLR rings 74
CRC error 27

D

Default IP address 25
Default Priority 44
Degree of protection 105
Delivery state 19
Designated Bridge 49
Designated Cost 49
Designated Root 49
Destination address 27
Destination address field 27
Destination Port 62
Device Level Ring 73
Device Level Ring (DLR) object 84
Device Level Ring Configuration 50
Device status 32
DHCP Option 82 54
DHCP Relay Agent 54
DHCP server 25
DHCP Services 54
Diagnostics 11
DIN rail 13
DLR 73
DLR Device Mode 50
DLR protocol 73
DLR Ring Port 50
dot1dBridge 68

E

EDS files 77
Egress 62
Electronic data sheets 77
Error states 16
etherMIB 68
Ethernet Link object 83
EtherNet/IP mode 19
Events 33
Exclusive owner 11
Extension BUQ 97
Extension FUQ 97

F

Factory settings 19
Fast Ring Detection 48
Firmware Update 36
FL Managed Infrastructure MIB 67
Forward Delay 48
Fragments 27
Functional earth grounding 16

G

Grounding 16

H

Hello Time 48
Housing dimensions 7, 105
Humidity 105

I

Identity object 78
IEEE 802.1D 28
ifMIB 68
IGMP Query Version 97
IGMP Snooping 97
Illegal Counter 53
Implicit messaging 77
Ingress 62
Input assemblies 89
IP configuration 19
IP MIB 68
IPAssign.exe 23

L

Learning addresses 27
Link Aggregation 45
Link Monitoring 44
List of Static VLANs 102
LLDP 43
LLDP Topology 59
lldpMIB 67
Load distribution 15
Local Events 56

M

MAC Address Table 34
Management Information Base 67, 68
Max Age 48
Message Router object 79
MIB 67
Mirroring 45, 62
Monitored link 57
Mounting 13
Mounting position 105
Multi-address function 27
Multicast MAC Address 98
Multicast/broadcast address 27
Multi-port EtherNet/IP™ devices 73

N

NET 11
Network Redundancy 47

O

Operating Edge 49
Operating modes 20
Operating Path Cost 49
Operating temperature 105
Option 82 54
Output assemblies 92

P

Packet processing sequence 28
Password 19, 40
Path Cost 49
pBridgeMIB 68
Port Based Security 45
Port Counter 64
Port ID 49
Port Mirroring 45, 62
Port security 52
Port Table 34
Port trunking 45
Power on selftest 11
Power source and link status assembly 96
Precedence 51
Prioritization 28
Priority 28
Priority queues 28
Processing queue 28
Processing rules 28

Protection class 105

Q

qBridgeMIB 68
QoS 28
QoS object 87
Quality of Service 28
Query Interval 97
Queue 28
Quick Setup 40

R

Receive queue 28
Redundancy 47
Redundant operation 15
Relay Agent 54
Removal 13
Reset 35
RFC1213 MIB 68
Ring port 50
Ripple 105
RJ45 Ethernet connector 17
rmon 68
Root 49
Root Cost 60
Root Port 60
RSTP 47
rstpMIB 68

S

SD card 8, 9
Security 45
Security Mode 53
SFP modules 17
SFP slot 17
Signal contact 8, 9, 16
Simple Network Management 67
Simple Network Management (SNMP) object 86
Smart mode 19
SNMP 67
SNMP interface 67
snmpFrameworkMIB 68
snmpMIB 68
Snoop Aging Time 97
Source and destination addresses 27
Static Query Ports 98
Status 11
Storage temperature 105
Store and forward mode 27
Supervisor 51
Supervisor Precedence 51
Switch principle 105

T

Tagged 101
TCP/IP Interface object 81
Topology Change 60
Topology information 59
Traffic classes 28
Transparent 101
Trap 53, 67
Trap Manager 63
Trap targets/receivers 69
Traps 69
Tree structure of the MIB 70
Trunking 45

U

Universal mode 19
User name 19
Utilization 64

V

VLAN/priority tag 28

(8)

MOTOR CONTROL and PROTECTION

Specification Section 16410

ABB

THERMAL MAGNETIC MOTOR CIRCUIT PROTECTOR
MS-495-75

MAGNETIC ONLY MOTOR CIRCUIT PROTECTOR
MO-495-75

MS5100, MS495, MS497 manual motor starters
22 to 100 A – with thermal and electromagnetic protection



MS5100-100



MS495-40



MS497-100

Description

Manual motor starters (MMS) are protection devices for the main circuit. They combine motor control and protection in a single device. MMS are used mainly to switch motors manually ON/OFF and protect them and the installation fuse-less against short-circuit, overload and phase failures [1]. Fuse-less protection with a manual motor starter saves costs, space and ensures a quick reaction under short-circuit condition, by switching off the motor within milliseconds.

Ordering details

Rated operational power 400 V AC-3 kW	Setting range A	Short-circuit breaking capacity I_{cs} at 400 V AC kA	Rated instantaneous short-circuit current setting I_i A	Type	Order code		Weight (1 pce) kg
MS5100 manual motor starters							
45	40 ... 100 [2]	70	240 ... 1300	MS5100-100	1SDA082034R1		1.200
MS495 manual motor starters							
30	45. ... 63	25	819	MS495-63	1SAM550000R1007		2.247
37	57 ... 75	25	975	MS495-75	1SAM550000R1008		2.253
45	70 ... 90	25	1170	MS495-90	1SAM550000R1009		2.280
55	80 ... 100	25	1235	MS495-100	1SAM550000R1010		2.295
MS497 manual motor starters							
15	22 ... 32	50	416	MS497-32	1SAM580000R1004		2.222
18.5	28 ... 40	50	520	MS497-40	1SAM580000R1005		2.203
22	36 ... 50	50	650	MS497-50	1SAM580000R1006		2.230
30	45 ... 63	50	819	MS497-63	1SAM580000R1007		2.255
37	57 ... 75	50	975	MS497-75	1SAM580000R1008		2.266
45	70 ... 90	50	1170	MS497-90	1SAM580000R1009		2.268
55	80 ... 100	50	1235	MS497-100	1SAM580000R1010		2.275

[1] The MS49x range offers phase loss sensitivity
[2] For motor loads only up to 80 A

RW-100 SP-1 PANEL

Main dimensions mm, *inches*

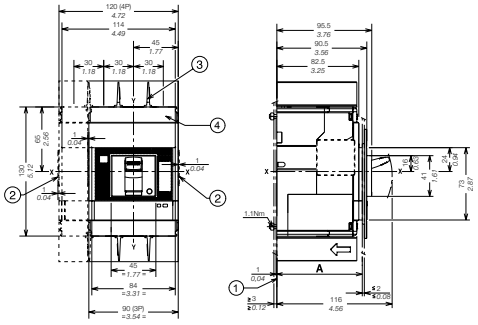

MS5100

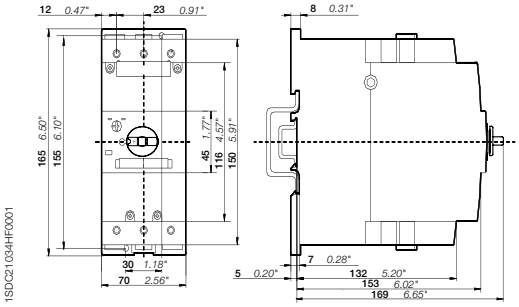

MS495, MS497

MO5100, MO495, MO496 manual motor starters magnetic only
32 to 100 A – with electromagnetic protection



MO5100-100



MO495-75



MO496-100

Description

The manual motor starter magnetic only is used to manually switch on and off motors and to protect them reliably and without the need for a fuse from short-circuits.

Ordering details

Rated operational power 400 V AC-3 [1] kW	Rated operational current A	Short-circuit breaking capacity I_{cs} at 400 V AC kA	Rated instantaneous short-circuit current setting I_i A	Type	Order code		Weight (1 pce) kg
MO5100 manual motor starter magnetic only							
25	70	36 [2]	210 ... 770	MO5100-70	1SDA082031R1		1.100
30	80	36 [2]	240 ... 880	MO5100-80	1SDA082032R1		1.100
45	100	36 [2]	300 ... 1100	MO5100-100	1SDA082033R1		1.100
MO495 manual motor starter magnetic only							
30	63	25	819	MO495-63	1SAM560000R1007		2.244
37	75	25	975	MO495-75	1SAM560000R1008		2.247
45	90	25	1170	MO495-90	1SAM560000R1009		2.269
55	100	25	1235	MO495-100	1SAM560000R1010		2.292
MO496 manual motor starter magnetic only							
15	32	50	416	MO496-32	1SAM590000R1004		2.208
18.5	40	50	520	MO496-40	1SAM590000R1005		2.218
22	50	50	650	MO496-50	1SAM590000R1006		2.218
30	63	50	819	MO496-63	1SAM590000R1007		2.248
37	75	50	975	MO496-75	1SAM590000R1008		2.278
45	90	50	1170	MO496-90	1SAM590000R1009		2.266
55	100	50	1235	MO496-100	1SAM590000R1010		2.293

[1] For overload protection of motors, an appropriate thermal or electronic overload relay must be used
[2] I_{cs} at 415 V AC

RW-100 SP-1 PANEL

Main dimensions mm, *inches*

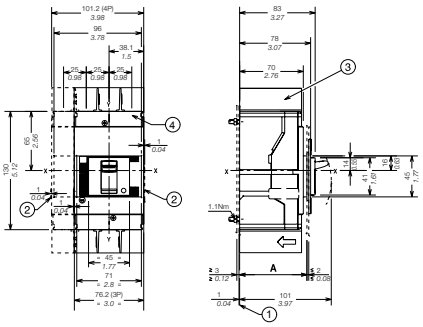

MO5100

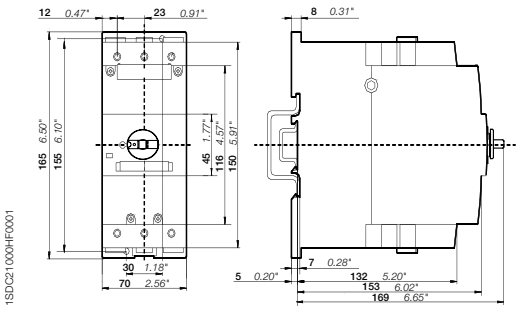

MO495, MO496

(9)

CONTACTORS and ACCESSORIES

Specification Section 16410

ABB

CONTACTOR W/AUX CONTACTS – 1 N.O. / 1 N.C.

AF65-30-22-13

AF technology
Benefits





5

Reliable in all networks
The electronic system within the AF contactor continuously monitor the current and voltage apply to the coil. The contactor is safely operated in an always optimized condition and hum free.

Four coils for the entire voltage range
AF contactors feature both AC and DC control in the same product. Still, the total number of product variants compared to a conventional range is reduced by 90%. Only four coils are required to cover 24 V AC, 20 V DC - 500 V AC / DC.

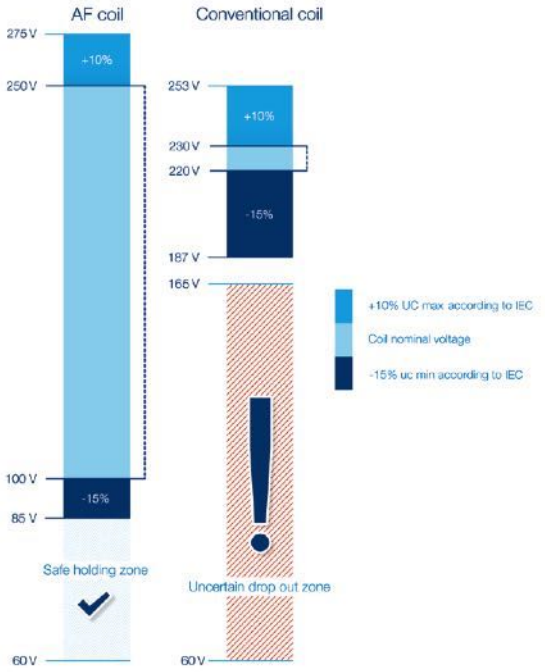



Wide control voltage range
With conventional contactor technology, different contactors are needed for different network voltages. Thanks to the wide operating range of the AF contactor, it can operate just as well in Europe as in Asia or North America. The core coil of the AF contactor range covers 100-250 V AC / DC, 50 / 60 Hz.

Built-in surge suppression
With conventional contactor technology, it is recommended to use an external surge suppressor, an accessory that could cost as much as half of the contactor. With the AF technology, the surges are handled by the contactor and never reach the control circuit. One less product and one less complication to worry about.

1SBC100202S0201

3-pole contactors, for motor control and power switching






AC / DC Control supply				Type	AF09	AF12	AF16	AF26	AF30	AF38	AF40	AF52	AF65	AF80	AF96
IEC	**AC-3**	Rated operational power θ ≤ 60 °C for AF09 ... AF370 θ ≤ 55 °C for AF400 ... AF2650	220 - 230 - 240 V	kW	2.2	3	4	6.5	9	11	11	15	18.5	22	25
			380 - 400 V	**kW**	**4**	**5.5**	**7.5**	**11**	**15**	**18.5**	**18.5**	**22**	**30**	**37**	**45**
			415 V	kW	4	5.5	9	11	15	18.5	22	30	37	45	55
			440 V	kW	4	5.5	9	15	18.5	22	22	30	37	45	55
			500 V	kW	5.5	7.5	9	15	18.5	22	22	30	37	45	55
			690 V	kW	5.5	7.5	9	15	18.5	22	22	30	37	45	55
			1000 V	kW	—	—	—	—	—	—	—	—	—	35	40
		Rated operational current	**380 - 400 V**	**A**	**9**	**12**	**18**	**26**	**32**	**38**	**40**	**53**	**65**	**80**	**96**
	AC-1	Rated operational current	**θ ≤ 40 °C, 690 V**	**A**	**25**	**28**	**30**	**45**	**50**	**50**	**70**	**100**	**105**	**125**	**130**
UL / CSA	**1-phase motor rating**		120 V	hp	0.75	1	1.5	2	2	2	3	3	5	7.5	7.5
			240 V	hp	1.5	2	3	3	5	5	7.5	10	15	15	20
	3-phase motor rating		200 - 208 V	hp	2	3	5	7.5	10	10	10	15	20	25	30
			220 - 240 V	hp	2	3	5	7.5	10	10	15	20	25	30	30
			440 - 480 V	**hp**	**5**	**7.5**	**10**	**15**	**20**	**25**	**30**	**40**	**50**	**60**	**60**
			550 - 600 V	hp	7.5	10	15	20	25	30	40	50	60	75	75
	General use rating		**600 V**	**A**	**25**	**28**	**30**	**45**	**50**	**50**	**60**	**80**	**90**	**105**	**115**
NEMA	**NEMA Size**				**00**	**0**	—	**1**	—	—	**2**	—	—	**3**	—

Main accessories

Auxiliary contact blocks	Front mounting	**CA4-10** (1 x N.O.) **CA4-01** (1 x N.C.)
	Side mounting	**CAL4-11** (1 x N.O. + 1 x N.C.)
Timers	Electronic	**TEF4-ON** **TEF4-OFF**
Interlocking units	Mechanical	**VM4** / **VM96-4**
	Mechanical / Electrical	**VEM4**
Connection sets	For reversing contactors	**BER16-4** / **BER38-4** / **BER65-4** / **BER96-4**
Surge suppressors		Built-in surge protection

Overload relays

Thermal relays	Class 10 (Class 10A for TF140, TA200DU)	**TF42** (0.10...38 A)		**TF65** (22...67 A)	**TF96** (40...96 A)
Electronic relays	Class 10E, 20E, 30E	**EF19** (0.10...18.9 A)	**EF19** (0.10...18.9 A) **EF45** (9...45 A)	**EF65** (20...70 A)	**EF96** (36...100 A)

Manual motor starters



	Thermal / magnetic protection Class 10	**MS116** (0.10...32 A) Ics up to 50 kA for class 10 A		**MS165** (10...65 A) Ics up to 100 kA (1)	**MS5100** (40...100 A) Ics up to 50 kA
		MS132 (0.10...32 A) Ics up to 100 kA			**MS495** (45...100 A) Ics up to 50 kA
				MS497 (22...100 A) Ics up to 100 kA	
	Magnetic only types	**MO132** (0.16...32 A) Ics up to 100 kA		**MO165** (16...65 A) Ics up to 100 kA (1)	**MO5100** (70...100 A) Ics up to 36 kA
				MO496 (32...100 A) Ics up to 100 kA	
					MO495 (63...100 A) Ics up to 50 kA
Accessories	For contactor mounting	**BEA16-4**	**BEA38-4**	**BEA65-4** (2)	

(1) MS165/MO165 are suitable for use with AF09 ... AF30 for North american applications.
(2) BEA65-4 suitable for MS165 and MO165 only.

RW-100 SP-1 PANEL

AF40 ... AF96 3-pole contactors

18.5 to 45 kW

AC / DC operated

AF65-30-22-13



1SBC101014V0014

AF40-30-00



1SBC101016V0014

AF80-30-00

AF40 ... AF96 contactors are mainly used for controlling 3-phase motors and power circuits up to 1000 V AC and 220 V DC. These contactors are of the block type design with 3 main poles.

- control circuit: AC or DC operated with electronic coil interface accepting a wide control voltage range (e.g. 100...250 V AC and DC), only 4 control voltage ranges covering 24...500 V 50/60 Hz and 20...500 V DC
  - can manage large control voltage variations
  - reduced panel energy consumption
  - very distinct closing and opening
  - can withstand short voltage dips and voltage sags (SEMI F47-0706 conditions of use on request).
- built-in surge suppression
- add-on auxiliary contact blocks for front or side mounting and a wide range of accessories.

IEC		UL / CSA		Rated control circuit voltage Uc min. ... Uc max.		Auxiliary contacts fitted	Type (1)	Order code	Weight
Rated operational power 400 V AC-3	current θ ≤ 40 °C AC-1	3-phase motor rating 480 V	General use rating 600 V AC						Pkg (1 pce)
kW	A	hp	A	V 50/60 Hz	V DC				kg
18.5	70	30	60	24...60	20...60 (1)	0 0	AF40-30-00-11	1SBL347001R1100	0.970
				48...130	48...130	0 0	AF40-30-00-12	1SBL347001R1200	0.970
				100...250	100...250	0 0	AF40-30-00-13	1SBL347001R1300	0.950
				250...500	250...500	0 0	AF40-30-00-14	1SBL347001R1400	0.950
22	100	40	80	24...60	20...60 (1)	0 0	AF52-30-00-11	1SBL367001R1100	0.970
				48...130	48...130	0 0	AF52-30-00-12	1SBL367001R1200	0.970
				100...250	100...250	0 0	AF52-30-00-13	1SBL367001R1300	0.950
				250...500	250...500	0 0	AF52-30-00-14	1SBL367001R1400	0.950
30	105	50	90	24...60	20...60 (1)	0 0	AF65-30-00-11	1SBL387001R1100	0.970
				48...130	48...130	0 0	AF65-30-00-12	1SBL387001R1200	0.970
				100...250	100...250	0 0	AF65-30-00-13	1SBL387001R1300	0.950
				250...500	250...500	0 0	AF65-30-00-14	1SBL387001R1400	0.950
37	125	60	105	24...60	20...60 (1)	0 0	AF80-30-00-11	1SBL397001R1100	1.220
				48...130	48...130	0 0	AF80-30-00-12	1SBL397001R1200	1.220
				100...250	100...250	0 0	AF80-30-00-13	1SBL397001R1300	1.170
				250...500	250...500	0 0	AF80-30-00-14	1SBL397001R1400	1.170
45	130	60	115	24...60	20...60 (1)	0 0	AF96-30-00-11	1SBL407001R1100	1.220
				48...130	48...130	0 0	AF96-30-00-12	1SBL407001R1200	1.220
				100...250	100...250	0 0	AF96-30-00-13	1SBL407001R1300	1.170
				250...500	250...500	0 0	AF96-30-00-14	1SBL407001R1400	1.170

(1) For control by PLC-output, use RA4 interface relay.

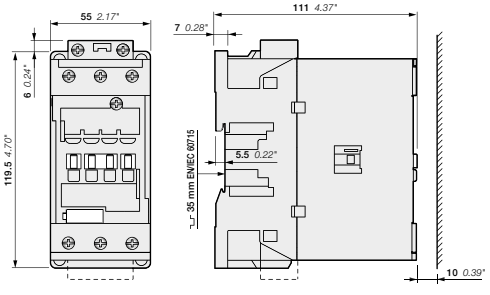

AF40, AF52, AF65

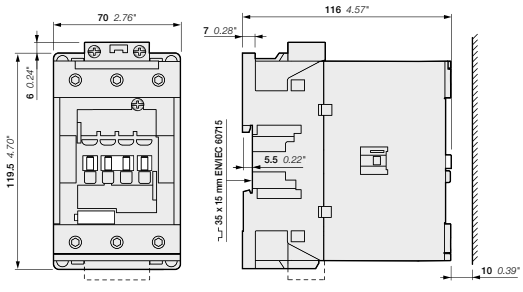

AF80, AF96

Main dimensions mm, inches

1SBC101740S0201 - Rev. B

AF09 ... AF96 3-pole contactors
Main accessories

Contactor and main accessories (other accessories available)

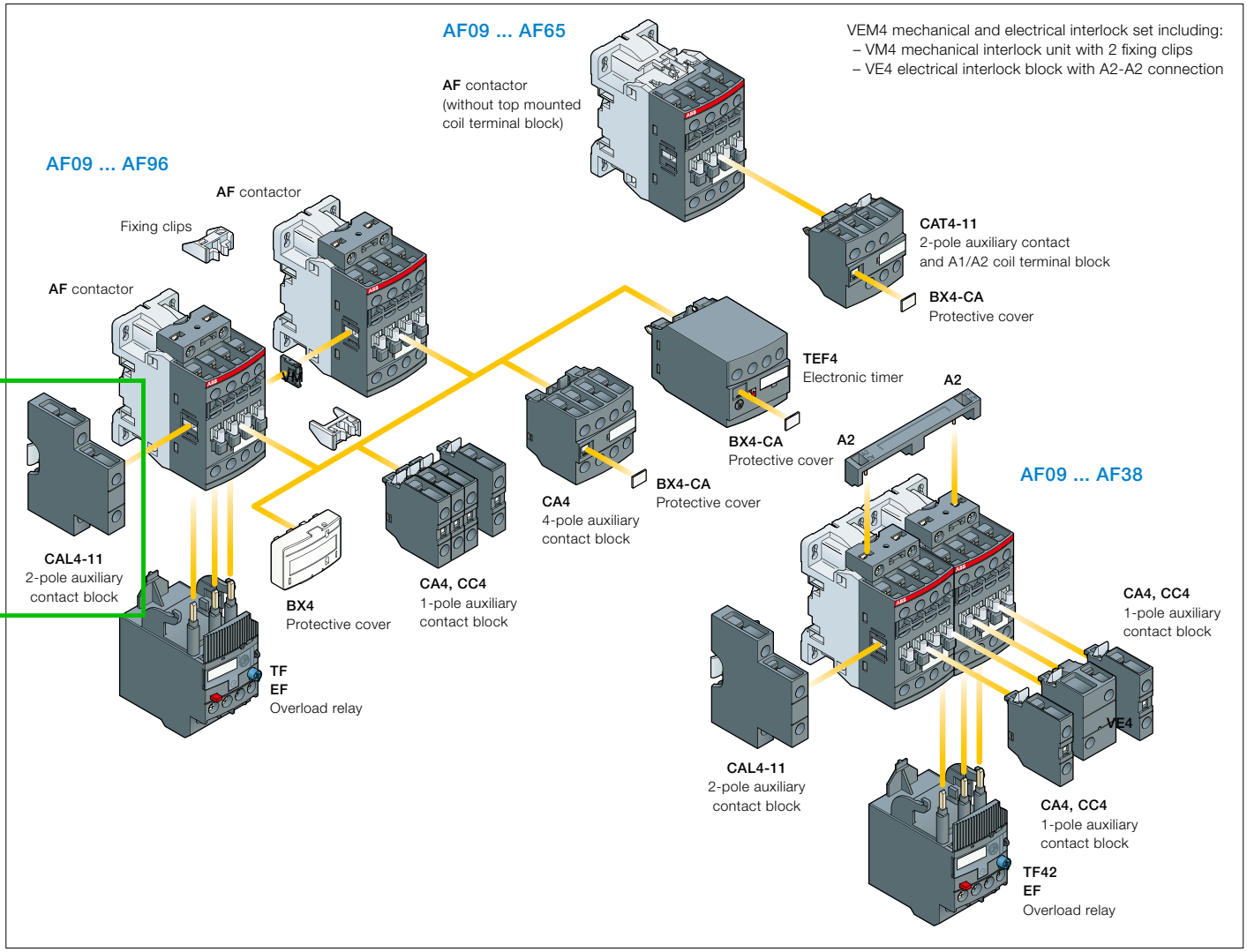

Main accessory fitting details

Many configurations of accessories are possible depending on whether these are front-mounted or side-mounted.

Contactor types	Main poles		Built-in auxiliary contacts		Front-mounted accessories: Auxiliary contact blocks								Electronic timer		Electrical and mechanical interlock set (between 2 contactors)		Side-mounted accessories: Auxiliary contact blocks		
					1-pole CA4 / 1-pole CC4		2-pole CAT4-11		4-pole CA4				TEF4		VEM4		Left side: 2-pole CAL4-11		Right side
	Max. N.C. built-in and add-on N.C. auxiliary contacts: 4 N.C. max. on positions 1, 2, 3, 4 and 3 N.C. max. on positions 1 ±30°, 5																		
AF09 ... AF16	3	0	0	1	4 max.	or	1	or	1	or	1		–	+	1		–
AF09 ... AF16	3	0	1	0	2 max.	or	1		–	or	1		–	+	1	+	1
AF26 ... AF38	3	0	0	0	3 max.		–		–		–	+	1	+	1	or	1
	Max. add-on N.C. auxiliary contacts: 6 N.C. max. on positions 1, 1 ±30°, 2, 3, 4, 5																		
AF40 ... AF65	3	0	0	0	4 max.	or	1	or	1	or	1		–	+	1	+	1
AF80, AF96	3	0	0	0	4 max.		–	or	1	or	1		–	+	1	+	1

Overload relays fitting details (1)

Contactor types	Thermal overload relays	Electronic overload relays
AF09 ... AF38	TF42 (0.10...38 A)	EF19 (0.10...19 A)
AF26 ... AF38	TF42 (0.10...38 A)	EF45 (9...45 A)
AF40 ... AF65	TF65 (22...67 A)	EF65 (20...70 A)
AF80, AF96	TF96 (40...96 A)	EF96 (36...100 A)

The addition of an overload relay on the contactor does not prevent fitting of many other accessories as shown above.
(1) Direct mounting - No kit required.

1SBC101748S0201 - Rev. A

AF09 ... AF96 3-pole contactors
Main accessories



CA4-10



CAL4-11



CA4-22E



CAT4-11E

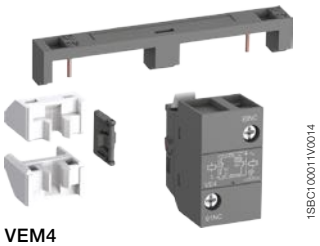

VEM4

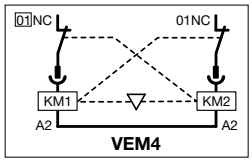

VEM4



TEF4-ON



BEA16-4

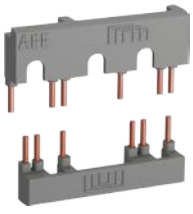

BER16-4

Ordering details (1)

For contactors	Auxiliary contacts				Type	Order code		Pkg qty	Weight (1 pce) kg
Front-mounted instantaneous auxiliary contact blocks									
AF09 ... AF96	1	0	–	–	CA4-10	1SBN010110R1010		1	0.014
	1	0	–	–	CA4-10-T	1SBN010110T1010		10	0.014
	0	1	–	–	CA4-01	1SBN010110R1001		1	0.014
	0	1	–	–	CA4-01-T	1SBN010110T1001		10	0.014
AF09 ... AF16..-30-10	2	2	–	–	CA4-22M	1SBN010140R1122		1	0.055
AF26 ... AF96..-30-00	2	2	–	–	CA4-22E	1SBN010140R1022		1	0.055
AF09 ... AF16..-30-01	2	2	–	–	CA4-22U	1SBN010140R1322		1	0.055
Front-mounted auxiliary contact blocks with N.O. leading contact and N.C. lagging contact									
AF09 ... AF96	–	–	1	0	CC4-10	1SBN010111R1010		1	0.014
	–	–	0	1	CC4-01	1SBN010111R1001		1	0.014
Side-mounted instantaneous auxiliary contact blocks									
AF09 ... AF96	1	1	–	–	CAL4-11	1SBN010120R1011		1	0.040
	1	1	–	–	CAL4-11-T	1SBN010120T1011		10	0.040
Front-mounted instantaneous auxiliary contact and A1/A2 coil terminal blocks									
AF09 ... AF16..-30-10	1	1	–	–	CAT4-11M	1SBN010151R1111		1	0.040
AF26 ... AF65..-30-00	1	1	–	–	CAT4-11E	1SBN010151R1011		1	0.040
AF09 ... AF16..-30-01	1	1	–	–	CAT4-11U	1SBN010151R1311		1	0.040

Note: CAT4 not suitable for AF..Z contactors with DC control voltage 12...20 V DC.

Mechanical interlock unit								
AF09 ... AF38				VM4	1SBN030105T1000		10	0.005
AF40 ... AF96				VM96-4	1SBN033405T1000		10	0.006

Note: VM4 and VM96-4 include 2 fixing clips (BB4) to maintain together both contactors.

Mechanical and electrical interlock set								
AF09 ... AF16 AF26 ... AF38	0	2	–	–	VEM4	1SBN030111R1000		1	0.035

Note: - VEM4 includes a VM4 mechanical interlock unit with 2 fixing clips (BB4), a VE4 electrical interlock block. VE4 block must be used with A2-A2 connection to respect the electrical connection diagram.
- VEM4 not suitable for AF..Z contactors with DC control voltage 12...20 V DC.

For contactors	Time delay range selected by switch	Delay type	Auxiliary contacts	Type	Order code		Pkg qty	Weight (1 pce) kg
Electronic timers								
AF09 ... AF96	0.1...1 s 1...10 s 10...100 s	ON-delay	1 1	TEF4-ON	1SBN020112R1000		1	0.065
		OFF-delay	1 1	TEF4-OFF	1SBN020114R1000		1	0.065

Note: Rated control circuit voltage Uc 24...240 V 50/60 Hz or DC.

Connecting links with manual motor starters							
AF09 ... AF16	with	MS116-0.16 ... MS116-25, MS132-0.16 ... MS132-25	BEA16-4	1SBN081306T1000		10	0.025
AF26 ... AF38	with	MS116-0.16 ... MS116-16, MS132-0.16 ... MS132-10	BEA26-4	1SBN082306T1000		10	0.025
	with	MS116-20 ... MS116-32, MS132-12 ... MS132-32	BEA38-4	1SBN082306T2000		10	0.030
AF40 ... AF65	with	MS165-16 ... MS165-65	BEA65-4	1SBN083406R1000		1	0.090
Connection sets for reversing contactors							
AF09 ... AF16			BER16-4	1SBN081311R1000		1	0.045
AF26 ... AF38			BER38-4	1SBN082311R1000		1	0.100
AF40 ... AF65			BER65-4	1SBN083411R1000		1	0.175
AF80 ... AF96			BER96-4	1SBN083911R1000		1	0.250
Connection sets for star-delta starting							
AF09 ... AF16	With or without VM4		BEY16-4	1SBN081313R2000		1	0.050
AF26 ... AF38	With or without VM4		BEY38-4	1SBN082713R2000		1	0.110
AF40 ... AF65	With or without VM96-4		BEY65-4	1SBN083413R2000		1	0.200
AF80 ... AF96	With or without VM96-4		BEY96-4	1SBN083913R2000		1	0.250

(1) For more information, refer to main catalog "Accessories" section.

1SBC101749S0201 - Rev. A

AF09 ... AF96 3-pole contactors
Technical data

Main pole utilization characteristics - 3 N.O. non-reversing contactors

Contactor types	AC / DC operated	AF09	AF12	AF16	AF26	AF30	AF38	AF40	AF52	AF65	AF80	AF96
HVAC application - UL / CSA												
Definite purpose heating rating - 3-phase												
Full Load Amps (FLA)		20 A	25 A	30 A	45 A	50 A	50 A	60 A	80 A	90 A	105 A	115 A
Locked Rotor Amps (LRA)	**200-208 V AC**	120 A	150 A	180 A	270 A	300 A	300 A	360 A	480 A	540 A	630 A	690 A
	220-240 V AC	120 A	150 A	180 A	270 A	300 A	300 A	360 A	480 A	540 A	630 A	690 A
	440-480 V AC	120 A	150 A	180 A	270 A	300 A	300 A	360 A	480 A	540 A	630 A	690 A
	550-600 V AC	80 A	100 A	120 A	180 A	200 A	200 A	240 A	320 A	360 A	420 A	460 A
Definite purpose air conditioning rating - 3-phase												
Full Load Amps (FLA)		20 A	25 A	30 A	45 A	50 A	50 A	60 A	80 A	90 A	105 A	115 A
Locked Rotor Amps (LRA)	**200-208 V AC**	120 A	150 A	180 A	270 A	300 A	300 A	360 A	480 A	540 A	630 A	690 A
	220-240 V AC	120 A	150 A	180 A	270 A	300 A	300 A	360 A	480 A	540 A	630 A	690 A
	440-480 V AC	120 A	150 A	180 A	270 A	300 A	300 A	360 A	480 A	540 A	630 A	690 A
	550-600 V AC	80 A	100 A	120 A	180 A	200 A	200 A	240 A	320 A	360 A	420 A	460 A
AC Resistance air heating												
Full Load Amps (FLA)	**600 V AC**	20 A	25 A	30 A	45 A	50 A	50 A	65 A	80 A	90 A	105 A	115 A
Elevator control, load switching, 500 000 electrical operating cycles acc. to CSA B44.1 / ASME 17.5 paragraph 19.2.1												
1-phase												
Horse power rating	**110-120 V AC**	1/4 hp	1/3 hp	(1)	1-1/2 hp	2 hp	2 hp	3 hp	3 hp	3 hp	5 hp	5 hp
	220-240 V AC	1/2 hp	3/4 hp	(1)	3 hp	3 hp	5 hp	5 hp	7-1/2 hp	10 hp	10 hp	10 hp
3-phase												
Horse power rating	**200-208 V AC**	1 hp	2 hp	(1)	5 hp	7-1/2 hp	7-1/2 hp	10 hp	10 hp	15 hp	15 hp	15 hp
	220-240 V AC	1 hp	2 hp	(1)	5 hp	7-1/2 hp	10 hp	10 hp	15 hp	20 hp	20 hp	20 hp
	440-480 V AC	3 hp	5 hp	(1)	15 hp	20 hp	20 hp	25 hp	30 hp	40 hp	40 hp	40 hp
	550-600 V AC	3 hp	5 hp	(1)	15 hp	20 hp	20 hp	30 hp	40 hp	40 hp	50 hp	50 hp
Elevator control, 500 000 mechanical operating cycles, 5 electrical operating cycles acc. to CSA B44.1 / ASME 17.5 paragraph 19.2.2												
1-phase												
Horse power rating	**110-120 V AC**	3/4 hp	1 hp	1-1/2 hp	2 hp	2 hp	3 hp	3 hp	3 hp	5 hp	7-1/2 hp	7-1/2 hp
	220-240 V AC	1-1/2 hp	2 hp	3 hp	3 hp	5 hp	7.5 hp	7-1/2 hp	7-1/2 hp	10 hp	15 hp	20 hp
3-phase												
Horse power rating	**200-208 V AC**	2 hp	3 hp	5 hp	7-1/2 hp	10 hp	10 hp	10 hp	15 hp	20 hp	25 hp	30 hp
	220-240 V AC	2 hp	3 hp	5 hp	7-1/2 hp	10 hp	10 hp	15 hp	20 hp	25 hp	30 hp	30 hp
	440-480 V AC	5 hp	7-1/2 hp	10 hp	15 hp	20 hp	25 hp	30 hp	40 hp	50 hp	60 hp	60 hp
	550-600 V AC	7-1/2 hp	10 hp	15 hp	20 hp	25 hp	30 hp	40 hp	50 hp	60 hp	75 hp	75 hp
Lighting application - UL / CSA												
Tungsten lamps												
1-phase per pole	**347 V AC**	20 A	25 A	30 A	45 A	50 A	50 A	65 A	80 A	90 A	105 A	115 A
3-phase break all lines	**600 V AC**	20 A	25 A	30 A	45 A	50 A	50 A	65 A	80 A	90 A	105 A	115 A
Electrical discharge lamps (ballast)												
1-phase per pole	**347 V AC**	20 A	25 A	30 A	45 A	50 A	50 A	65 A	80 A	90 A	105 A	115 A
3-phase break all lines	**600 V AC**	20 A	25 A	30 A	45 A	50 A	50 A	65 A	80 A	90 A	105 A	115 A

(1) 3-pole AF16 cannot be used. Select 4-pole non-reversing contactor AF16..-40-..

1SBC100065S0201

AF09 ... AF96 3-pole contactors
Technical data

Built-in auxiliary contacts according to IEC

Contactor types	AC / DC operated	AF09	AF12	AF16	AF26	AF30	AF38	AF40	AF52	AF65	AF80	AF96
Rated operational voltage Ue max.		690 V										
Rated frequency (without derating)		50 / 60 Hz										
Conventional free air thermal current Ith - θ ≤ 40 °C		16 A										
Ie / Rated operational current AC-15												
acc. to IEC 60947-5-1	**24-127 V 50/60 Hz**	6 A										
	220-240 V 50/60 Hz	4 A										
	400-440 V 50/60 Hz	3 A										
	500 V 50/60 Hz	2 A										
	690 V 50/60 Hz	2 A										
Making capacity AC-15		10 x Ie AC-15 acc. to IEC 60947-5-1										
Breaking capacity AC-15		10 x Ie AC-15 acc. to IEC 60947-5-1										
Ie / Rated operational current DC-13												
acc. to IEC 60947-5-1	**24 V DC**	6 A / 144 W										
	48 V DC	2.8 A / 134 W										
	72 V DC	1 A / 72 W										
	110 V DC	0.55 A / 60 W										
	125 V DC	0.55 A / 69 W										
	220 V DC	0.27 A / 60 W										
	250 V DC	0.27 A / 68 W										
	400 V DC	0.15 A / 60 W										
	500 V DC	0.13 A / 65 W										
	600 V DC	0.1 A / 60 W										
Short-circuit protection device gG type fuse		10 A										
Rated short-time withstand current Icw	**for 1.0 s**	100 A										
	for 0.1 s	140 A										
Minimum switching capacity		12 V / 3 mA										
with failure rate acc. to IEC 60947-5-4		10^{-7}										
Non-overlapping time between N.O. and N.C. contacts		≥ 2 ms										
Power dissipation per pole at 6 A		0.1 W										
Max. electrical switching frequency	**AC-15**	1200 cycles/h										
	DC-13	900 cycles/h										
Mechanically linked contacts acc. to annex L of IEC 60947-5-1		Built-in N.O. or N.C. auxiliary contacts and additional N.O. or N.C. auxiliary contacts (CA4, CAL4, CAT4 aux. contact blocks) are mechanically linked contacts.										
Mirror contacts acc. to annex F of IEC 60947-4-1		Built-in N.C. auxiliary contacts or additional N.C. auxiliary contacts (CA4, CAL4, CAT4 aux. contact blocks) are mirror contacts.										

Built-in auxiliary contacts according to UL / CSA

Contactor types	AC / DC operated	AF09	AF12	AF16	AF26	AF30	AF38	AF40	AF52	AF65	AF80	AF96
Max. operational voltage		600 V AC, 600 V DC										
Pilot duty		A600, Q600										
AC thermal rated current		10 A										
AC maximum volt-ampere making		7200 VA										
AC maximum volt-ampere breaking		720 VA										
DC thermal rated current		2.5 A										
DC maximum volt-ampere making-breaking		69 VA										

1SBC101445S0201 - Rev. A

Auxiliary contact blocks



CA5-10



CA5-40E



CAL5-11



CAL18-11

Description

The auxiliary contact blocks are used for the operation of auxiliary circuits and control circuits for standard industrial environments.

Types of auxiliary contact blocks for front mounting:

– CA5 1 or 4-pole block, instantaneous with N.O., N.C. contacts

– CC5 1-pole block, with N.O. leading contact or N.C. lagging contact.

Select the 4-pole auxiliary contact blocks CA5 type, according to the contactor type for compliance with the standard requirements (see "Terminal Marking and Positioning").

Types of auxiliary contact blocks for side mounting:

– CAL 2-pole block instantaneous N.O. + N.C. contacts.

For clipping onto the right- and/or left-hand side of the contactors.

The auxiliary contact blocks are equipped with screw type connecting terminals delivered open, protected against accidental direct contact and bear the corresponding function marking.

Ordering details (1)

For contactors	Auxiliary contacts				Type	Order code		Pkg qty	Weight (1 pce)
									kg
Front-mounted instantaneous auxiliary contact blocks, 1-pole									
UA16 ... UA110	1	0	–	–	CA5-10	1SBN010010R1010		10	0.014
	0	1	–	–	CA5-01	1SBN010010R1001		10	0.014
	–	–	1	0	CC5-10	1SBN010011R1010		10	0.014
	–	–	0	1	CC5-01	1SBN010011R1001		10	0.014
Front-mounted instantaneous auxiliary contact blocks, 4-pole									
UA16 ... UA30	2	2	–	–	CA5-22M	1SBN010040R1122		2	0.060
	3	1	–	–	CA5-31M	1SBN010040R1131		2	0.060
	1	3	–	–	CA5-13M	1SBN010040R1113		2	0.060
	0	4	–	–	CA5-04M	1SBN010040R1104		2	0.060
	1	1	1	1	CA5-11/11M	1SBN010040R1118		2	0.060
UA50 ... UA110	2	2	–	–	CA5-22E	1SBN010040R1022		2	0.060
	3	1	–	–	CA5-31E	1SBN010040R1031		2	0.060
	4	0	–	–	CA5-40E	1SBN010040R1040		2	0.060
	0	4	–	–	CA5-04E	1SBN010040R1004		2	0.060
	1	1	1	1	CA5-11/11E	1SBN010040R1018		2	0.060
Side-mounted instantaneous auxiliary contact blocks, 2-pole									
UA16 ... UA75	1	1	–	–	CAL5-11	1SBN010020R1011		2	0.050
UA95, UA110	1	1	–	–	CAL18-11	1SFN010720R1011		2	0.050

(1) For each contactor type, refer to "Accessory fitting details" table.

Note:

– The front-mounted auxiliary contact blocks provided for the UA75 contactors can be used with the GA and GAE types

– The CAL auxiliary contact blocks can be used with GA contactors:

GA75-10-00: 2 x CAL5-11 blocks
GA75-10-11: 1 x CAL5-11 block
GAE75-10-00: 1 x CAL5-11 block
GAE75-10-11: no add-on block.

– The CAL auxiliary contact blocks can be used with UA..RA contactors. See "Accessory fitting details" for this contactor type.

1SBC101520S0201 - Rev. B

(10)

SURGE SUPPRESSORS

Specification Section 13430-2.6

PHOENIX CONTACT

SURGE SUPPRESSOR FOR 4-20Ma LOOPS
2801512 (PT-IQ-1X2-EX-24DC-UT)

SURGE SUPPRESSOR
2907918 (PLT-SEC-T3-120-FM-UT)

SOLA

SURGE PROTECTOR
STV25K-10S

MERSEN

SURGE PROTECTOR 277/480Y WITH REMOTE CONTACT
STP4803PDGM

Surge protection device - PT-IQ-1X2-EX-24DC-UT - 2801512

Please be informed that the data shown in this PDF Document is generated from our Online Catalog. Please find the complete data in the user's documentation. Our General Terms of Use for Downloads are valid (http://phoenixcontact.com/download)



Surge protection, consisting of protective plug and base element, with integrated multi-stage status indicator on the module, for one 2-wire floating Ex i signal circuit, HART-compatible.

Key Commercial Data

Packing unit	1 pc
GTIN	4 046356 801225
GTIN	4046356801225
Weight per Piece (excluding packing)	140.000 g
Custom tariff number	85363010
Country of origin	Germany

Technical data

Dimensions

Height	91.1 mm
Width	17.7 mm
Depth	77.5 mm (incl. DIN rail 7.5 mm)
Horizontal pitch	1 Div.

Ambient conditions

Ambient temperature (operation)	-40 °C ... 70 °C
Ambient temperature (storage/transport)	-40 °C ... 85 °C
Altitude	≤ 2000 m (amsl (above mean sea level))
Degree of protection	IP20

General

Surge protection device - PT-IQ-1X2-EX-24DC-UT - 2801512

Technical data

General

Housing material	PA 6.6
Flammability rating according to UL 94	V-0
Color	black
Mounting type	DIN rail: 35 mm
Type	DIN rail module, two-section, divisible
Direction of action	Line-Line & Line-Signal Ground/Shield & optional Signal Ground/Shield-Earth Ground

Protective circuit

IEC test classification	C1
	C2
	C3
	D1
Nominal voltage U_N	24 V DC
Maximum continuous voltage U_C	30 V DC
	21 V AC
Rated current	350 mA
Operating effective current I_C at U_C	≤ 5 µA (per system)
Residual current I_{PE}	≤ 100 nA (per system)
Nominal discharge current I_n (8/20) µs (line-line)	10 kA
Nominal discharge current I_n (8/20) µs (line-earth)	10 kA
Pulse discharge current I_{imp} (10/350) µs	2 kA
Total discharge current I_{total} (8/20) µs	20 kA
Voltage protection level U_p (line-line)	≤ 60 V (C1 - 1 kV/500 A)
	≤ 110 V (C2 - 10 kV / 5 kA)
	≤ 140 V (C2 - 10 kA)
	≤ 50 V (C3 - 25 A)
	≤ 55 V (C3 - 100 A)
Voltage protection level U_p (line-earth)	≤ 1.3 kV (C2 - 10 kV / 5 kA)
	≤ 1.5 kV (C2 - 10 kA)
	≤ 1.3 kV (C3 - 100 A)
Response time t_A (line-line)	≤ 1 ns
Response time t_A (line-earth)	≤ 100 ns
Input attenuation aE, sym.	typ. 0.3 dB (≤ 300 kHz / 150 Ω)
Cut-off frequency fg (3 dB), sym. in 150 Ohm system	typ. 1.1 MHz
Capacity (line-earth)	typ. 2 nF
Resistance per path	1.2 Ω ±5 %

Surge protection device - PT-IQ-1X2-EX-24DC-UT - 2801512

Technical data

Protective circuit

Surge protection fault message	Optical, multi-stage
Max. required back-up fuse	350 mA (F)
Impulse durability (line-line)	C1 - 1 kV / 500 A
	C2 - 10 kA
	C3 - 100 A
Impulse durability (line-earth)	C2 - 10 kA
	D1 - 2 kA
Pulse reset time (line-line)	≤ 30 ms
Pulse reset time (line-earth)	≤ 30 ms

Connection data

Connection method	Screw connection
Screw thread	M3
Tightening torque	0.5 Nm
Stripping length	8 mm
Conductor cross section flexible	0.2 mm² ... 2.5 mm²
Conductor cross section solid	0.2 mm² ... 4 mm²
Conductor cross section AWG	24 ... 12

Connection, equipotential bonding

Connection method	DIN rail NS35

Remote indication contact

Switching function	via DIN rail connector

Standards and Regulations

Standards/specifications	EN 61643-21/A2 2013
	IEC 61643-21/A2 2012
	EN 61000-6-2 2005
	EN 61000-6-3 A1:2011

General

Maximum inner capacitance C_i	negligible
Max. internal inductance L_i	negligible
Max. input current I_i	350 mA
Max. input voltage U_i	30 V DC
max. input power P_i	1.2 W
Insulation voltage to ground	> 500 V AC
Standards/specifications	EN 60079-0 2012
	EN 60079-11 2012

Surge protection device - PT-IQ-1X2-EX-24DC-UT - 2801512

Technical data

General

	EN 60079-15 2010
	IEC 60079-0 2012
	IEC 60079-11 2012
	IEC 60079-15 2010
Ambient temperature (operation)	-40 °C ... 50 °C (T6)
	-40 °C ... 70 °C (T4)

Conformity / approvals

UL, USA/Canada	Class I, Div. 2, Groups A, B, C, D T5

Environmental Product Compliance

REACh SVHC	Lead 7439-92-1
China RoHS	Environmentally Friendly Use Period = 50 years
	For details about hazardous substances go to tab “Downloads”, Category “Manufacturer's declaration”

Drawings

Pictogram



Dimensional drawing

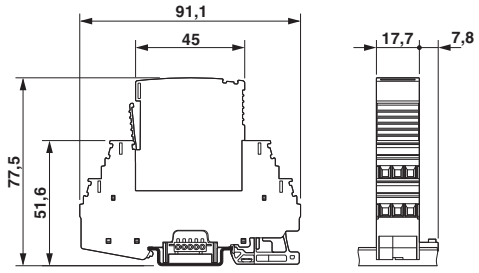

Circuit diagram

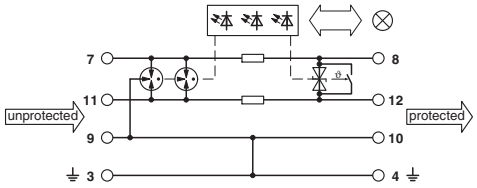

Surge protection device - PT-IQ-1X2-EX-24DC-UT - 2801512

Classifications

eCl@ss

eCl@ss 10.0.1	27130807
eCl@ss 11.0	27130807
eCl@ss 4.0	27130800
eCl@ss 4.1	27130800
eCl@ss 5.0	27130800
eCl@ss 5.1	27130800
eCl@ss 6.0	27130800
eCl@ss 7.0	27130807
eCl@ss 8.0	27130807
eCl@ss 9.0	27130807

ETIM

ETIM 3.0	EC000943
ETIM 4.0	EC000943
ETIM 5.0	EC000943
ETIM 6.0	EC000943
ETIM 7.0	EC000943

UNSPSC

UNSPSC 6.01	30212010
UNSPSC 7.0901	39121610
UNSPSC 11	39121610
UNSPSC 12.01	39121610
UNSPSC 13.2	39121620
UNSPSC 18.0	39121620
UNSPSC 19.0	39121620
UNSPSC 20.0	39121620
UNSPSC 21.0	39121620

Approvals

Approvals

Approvals

UL Listed

120 VAC POWER SURGE PROTECTION (RCP's)

Type 3 surge protection device - PLT-SEC-T3-120-FM-UT - 2907918

Please be informed that the data shown in this PDF Document is generated from our Online Catalog. Please find the complete data in the user's documentation. Our General Terms of Use for Downloads are valid (http://phoenixcontact.com/download)



Type 2/3 surge protection, consisting of protective plug and base element, with integrated status indicator and remote signaling for single-phase power supply networks. Nominal voltage 120 V AC/DC.

Your advantages

- Easy to maintain due to consistently pluggable protection modules
- Excellent level of information provided by mechanical/visual status indicator and remote indication contact
- Your preferred connection technology can be selected as both screw connection and Push-in connection are available
- Optimal additional protection of the industrial power supply for a longer service life and increased availability of the system
- 5-year warranty on your QUINT 4 power supply when installed together with PLT-SEC, see document in the download area

Key Commercial Data

Packing unit	1 pc
GTIN	4 055626 257440
GTIN	4055626257440
Weight per Piece (excluding packing)	96.000 g
Custom tariff number	85363030
Country of origin	Germany

Technical data

Dimensions

Height	93.4 mm
Width	17.7 mm
Depth	74.5 mm (incl. DIN rail 7.5 mm)
Horizontal pitch	1 Div.

Type 3 surge protection device - PLT-SEC-T3-120-FM-UT - 2907918

Technical data

Ambient conditions

Degree of protection	IP20
Ambient temperature (operation)	-40 °C ... 80 °C
Ambient temperature (storage/transport)	-40 °C ... 80 °C
Altitude	≤ 2000 m (operating voltage remote contact ≤ 250 V)
	≤ 6000 m (operating voltage remote contact ≤ 150 V)
Permissible humidity (operation)	5 % ... 95 %
Shock (operation)	30g (Half-sine / 11 ms / 3x ±X, ±Y, ±Z)
Vibration (operation)	5g (5 ... 500 Hz / 2.5 h / X, Y, Z)

General

EN type	T2 / T3
IEC power supply system	TT
	TN-S
Number of ports	One
Mode of protection	L-N
	L-PE
	N-PE
Mounting type	DIN rail: 35 mm
Color	light grey RAL 7035
	traffic grey A RAL 7042
Housing material	PA 6.6-FR 20 % GF
	PA 6.6-FR
Degree of pollution	2
Flammability rating according to UL 94	V-0
Type	DIN rail module, two-section, divisible
Number of positions	2
Surge protection fault message	Optical, remote indicator contact

Protective circuit

Nominal voltage U_N	120 V AC (TN-S)
	120 V AC (TT)
Nominal frequency f_N	50 Hz (60 Hz)
Maximum continuous voltage U_C	150 V AC
Rated load current I_L	26 A (at 30 °C)
Residual current I_{PE}	≤ 5 µA
Nominal discharge current I_n (8/20) µs	5 kA
Standby power consumption P_C	≤ 10.6 mVA (at U_{REF})
	≤ 13.5 mVA (at U_C)

Type 3 surge protection device - PLT-SEC-T3-120-FM-UT - 2907918

Technical data

Protective circuit

Reference test voltage U_{REF}	132 V AC
Max. discharge current I_{max} (8/20) µs	10 kA
Combination wave U_{OC}	6 kV
Voltage protection level U_p (L-N)	≤ 0.75 kV (at U_{OC})
	≤ 0.95 kV (at I_n)
Voltage protection level U_p (L-PE)	≤ 0.85 kV
Voltage protection level U_p (N-PE)	≤ 0.85 kV
TOV behavior at U_T (L-N)	240 V AC (5 s / withstand mode)
	240 V AC (120 min / withstand mode)
TOV behavior at U_T (L-PE)	240 V AC (5 s / withstand mode)
	240 V AC (120 min / withstand mode)
	1332 V AC (200 ms / safe failure mode)
TOV behavior at U_T (N-PE)	1200 V AC (200 ms / safe failure mode)
Response time t_A (L-N)	≤ 25 ns
Response time t_A (L-PE)	≤ 100 ns
Response time t_A (N-PE)	≤ 100 ns
Short-circuit current rating I_{SCCR}	10 kA AC
Max. backup fuse with branch wiring	32 A (gG / B / C)
Maximum backup fuse for through wiring	25 A (gG / B / C)

Additional technical data

Short-circuit current rating I_{SCCR}	0.25 kA DC (Without additional backup fuse in the DC branch wiring)
	5 kA DC (for 20 A gG / B backup fuse)
Maximum continuous voltage U_C	150 V DC
Residual voltage U_{res} (L-N)	≤ 0.68 kV (at 2 kA)
	≤ 0.75 kV (at 3 kA)
	≤ 0.64 kV (at U_{OC} = 4 kV)
Residual voltage U_{res} (L-PE)	≤ 0.58 kV (at 2 kA)
	≤ 0.65 kV (at 3 kA)
	≤ 0.75 kV (at U_{OC} = 4 kV)
Residual voltage U_{res} (N-PE)	≤ 0.58 kV (at 2 kA)
	≤ 0.65 kV (at 3 kA)
	≤ 0.75 kV (at U_{OC} = 4 kV)
Mode of protection	(DC+) - (DC-)
	(DC+/DC-) - PE
IEC test classification (in accordance with IEC 61643-21)	D1
Impulse durability (line-line)	D1 - 500 A

Type 3 surge protection device - PLT-SEC-T3-120-FM-UT - 2907918

Technical data

Additional technical data

Impulse durability (line-earth)	D1 - 500 A
Pulse discharge current I_{imp} (10/350) µs (line-line)	0.5 kA
Pulse discharge current I_{imp} (10/350) µs (line-earth)	0.5 kA

Indicator/remote signaling

Switching function	PDT contact
Operating voltage	250 V AC
	125 V DC (200 mA DC)
Operating current	0.5 A AC
	0.5 A DC (75 V DC)
Connection method	Screw connection
Conductor cross section flexible	0.2 mm² ... 2.5 mm²
Conductor cross section solid	0.2 mm² ... 2.5 mm²
Conductor cross section AWG	30 ... 12
Screw thread	M3
Tightening torque	0.5 Nm
Stripping length	10 mm

Connection data

Connection method	Screw connection
Conductor cross section flexible	0.2 mm² ... 2.5 mm²
Conductor cross section solid	0.2 mm² ... 4 mm²
Conductor cross section AWG	24 ... 12
Screw thread	M3
Tightening torque	0.5 Nm
Stripping length	10 mm

UL specifications

SPD Type	2 (Open-Type SPD)
Maximum continuous operating voltage MCOV	150 V AC
	150 V DC
Nominal voltage	150 V DC
Rated load current I_L	20 A
Mode of protection	L-N
	L-G
	N-G
	(DC+) - (DC-)
	(DC+) - G
	(DC-) - G

Type 3 surge protection device - PLT-SEC-T3-120-FM-UT - 2907918

Technical data

UL specifications

Power distribution system	Single phase
	DC
Nominal frequency	50/60 Hz
Voltage protection rating VPR (L-N)	700 V
Voltage protection rating VPR (L-G)	700 V
Voltage protection rating VPR (N-G)	900 V
Nominal discharge current I_n	5 kA
Short-circuit current rating (SCCR)	10 kA AC
	5 kA DC

UL indicator/remote signaling

Operating voltage	250 V AC (0.5 A)
	12 V DC (4 A)
	24 V DC (2 A)
	48 V DC (1 A)
Tightening torque	5 lb_f-in. ... 7 lb_f-in.
Conductor cross section AWG	30 ... 12

UL connection data

Conductor cross section AWG	16 ... 12
Tightening torque	4.4 lb_f-in.

Standards and Regulations

Standards/specifications	IEC 61643-11 2011
	EN 61643-11 2012

Environmental Product Compliance

REACh SVHC	Lead 7439-92-1
China RoHS	Environmentally Friendly Use Period = 50 years
	For details about hazardous substances go to tab “Downloads”, Category “Manufacturer's declaration”

Drawings

Type 3 surge protection device - PLT-SEC-T3-120-FM-UT - 2907918

Diagram

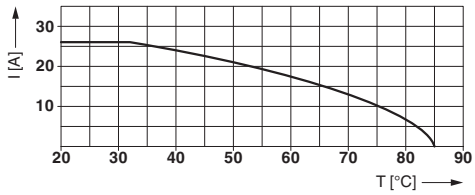

Nominal current depending on ambient temperature

Dimensional drawing

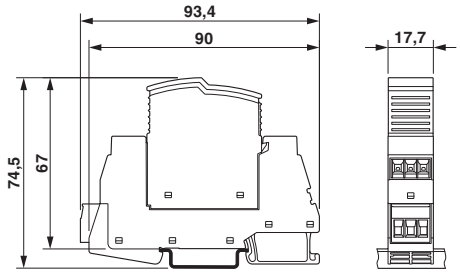

Circuit diagram

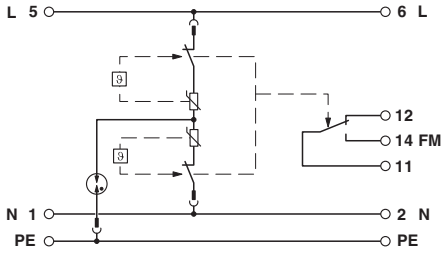

Classifications

eCl@ss

eCl@ss 10.0.1	27130806
eCl@ss 11.0	27130806
eCl@ss 6.0	27130800
eCl@ss 7.0	27130806
eCl@ss 8.0	27130806
eCl@ss 9.0	27130806

ETIM

ETIM 5.0	EC000942
ETIM 6.0	EC000942
ETIM 7.0	EC000942

Approvals

Approvals

Approvals

DNV GL / CCA / UL Listed / KEMA-KEUR / IECEE CB Scheme / cUL Listed / EAC / CSA / cULus Listed

The STV25K DIN Rail Series - Surge Protective Devices

SolaHD sTV25K Series provides point-of-use protection, at the dedicated equipment level, against damaging transients. Ideal for installation in electronic control cabinets found in harsh industrial environments such as the factory floor or at remote location. These devices provide 25,000 amps of surge protection, sinewave tracking, LED status indication and form C dry contacts. This DIN rail series also provides protection on all electrical paths and comes with a standard ten year product warranty.



Applications (20 Amp Max)

- Control Cabinets for Industrial Automation
- Point-of-Use Industrial/Service Equipment
- Remote Commercial or Industrial Equipment
- Instrumentation and Large Test Equipment
- Commercial and Building Automation Systems

Features

- Compact and narrow design maximizes panel space.
- Low clamping levels for more effective protection.
- Easy access terminal screws for quick mounting and installation.
- 25,000 amps of surge protection.
- Sine wave tracking and all mode protection provide consistent and reliable protection on all electrical paths.
- Thermal fusing prevents MOV overheating caused by excessive current levels.

Certifications and Compliances

- c UL us UL Recognized Component
  - UL 1449, type 2CA
  - UL 1283
- ABS Type Approved
- RoHS Compliant

E335146

Related Products

- DIN Rail Power Supplies
- DIN Rail AC UPS
- Industrial Control Transformers
- Active Tracking® Filters

Selection Table

Catalog Number	Input Voltage	
STV25K–10S	120 V	Single Phase (L - N)
STV25K–24S	240 V	Single Phase (L1 - L2)

Dimensional Diagram - in. (mm)

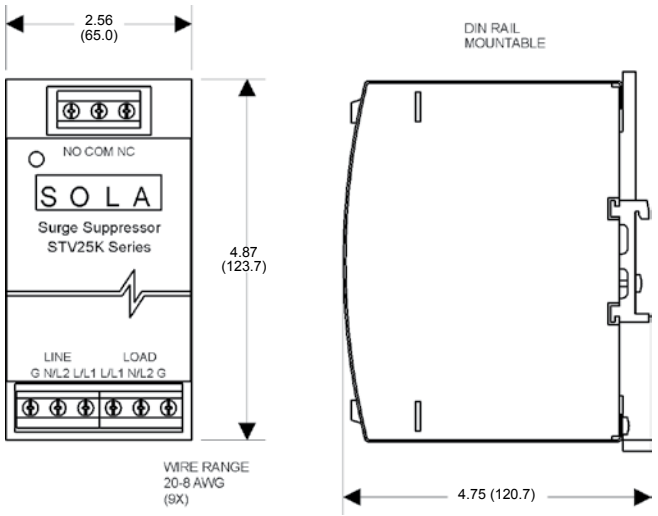

© December 2018

STV25K Specifications

Description	Catalog Number	
	STV25K–10S	STV25K–24S
Input Voltage	120 Vac, Single Phase 0-135 Vrms	240 Vac, Single Phase 0-260 Vrms
Maximum Continuous Operating Voltage (MCOV)	150 Vrms	300 Vrms
Line Frequency	47-63 Hz	
Connection/Mounting Type	DIN Rail Mount (Chassis Mount Bracket Optional order SDN-PMBRK2) with screw terminals for #12 AWG.	
Input Current Rating	20 amps	
Phase Configuration	2 wire + GND	
Short Circuit Current Rating (SCCR)	5kA	
Nominal Discharge Current (In)	3kA	
Weight – lbs (kg)	3.0 (1.36)	
Dimensions H x W x D – in (mm)	4.87 x 2.56 x 4.75 (123.7 x 65.0 x 120.7) includes mounting bracket	
Modes of Protection	All Mode: L - N, L - L, L - G, N-G	
Status Indication	Green LED, form C Contacts	
Packaging	Metal DIN Rail Mount Enclosure, IP20	
Response Time	< 0.5 nsec	
Operating Temperature	-40°C to +60°C	
Operating Humidity	0% to 95% Non-condensing	
	Noise Attenuation	
Normal Mode **Common Mode**	50 dB Min. 40 dB Min.	
	UL 1449, Type 4 Voltage Protection Ratings (VPRs) Vpeak	
L – N **L – L** **L – G** **N – G**	500 — 500 500	— 900 900 —
	Peak Surge Current Capability	
Warranty	10 year limited warranty	

© December 2018

STP Series Pluggable

Surge-Trap®

SURGE PROTECTIVE DEVICE

DIN-RAIL PLUGGABLE SPD FOR ANSI/UL 1449 TYPE 1 AND 2 APPLICATIONS



Surge-Trap® Pluggable Surge Protective Device (SPD) is a no-fuse, fail-safe surge suppressor featuring Mersen's patented TPMOV® technology inside. UL 1449 4th Edition approved, it is DIN-rail mountable featuring a fail-safe self-protected design, visual indicator, and a small footprint. A remote indicator option provides status to critical control circuitry. The Surge-Trap Pluggable SPD has a high short circuit rating and a thermally protected MOV, which eliminates the need for additional overcurrent protection devices.

NEW AND IMPROVED 75KA RATING

Mersen's DIN-Rail Pluggable SPD is one of a kind – the combination of a robust 75kA surge capacity along with no requirement of backup fusing creates an offering unique to the market. Add this to the reliability and safety of Mersen's patented TPMOV technology and you have a truly superior product.

RATINGS:

- **Volts (U_n):** 120-690VAC
- **Nominal Discharge Current Rating (I_n):** 10-20kA
- **Surge Capacity:** 75kA
- **Short-Circuit Current Rating (SCCR):** 200kA

FEATURES/BENEFITS:

- Easy installation or retrofit
- DIN-rail mountable
- Fail-safe, self-protected design
- Remote indicator
- Visual indicator
- IP20 finger-safe design
- Small footprint
- No additional overcurrent protection devices required
- Easy to replace modules
- 2-year warranty

APPROVALS:

- ANSI/UL 1449 4th Edition, Type 1 Component Assembly SPD, File E210793
- ANSI/IEEE C62.41.1, C62.41.2, C62.45
- RoHS Compliant

© 2020 Mersen. All rights reserved. Mersen reserves the right to change, update, or correct, without notice, any information contained in this datasheet.

GENERAL PRODUCT SPECIFICATIONS

Mounting:	35mm DIN-Rail	Operating & Storage Temperature:	– 40°C to + 85°C
Wire Range:	4-14AWG Solid / Stranded CU	Visual End of Life Indicator:	RED = End of Life
Terminal Torque:	35.4 lbs-in	Remote End of Life Indicator:	NO/NC Dry Contact
Degree of Protection:	IP 20	Frequency:	50-60 Hz
Flammability:	UL94 V0		

1-POLE, SINGLE-PHASE, 2-WIRE

Catalog Number	Nominal Voltage (VAC)	Maximum Continuous Operating Voltage (MCOV, VAc)				Voltage Protection Rating (VPR, VAC)				replacement plug	I_n (kA)
		L-N	L-G	N-G	L-L	L-N	L-G	N-G	L-L	L-1	
STP120P07(M)	120	175	-	-	-	600	-	-	-	SP07U175	20
STP230P07(M)	240	275	-	-	-	900	-	-	-	SP07U275	20
STP277P07(M)	277	320	-	-	-	1000	-	-	-	SP07U320	20
STP347P07(M)	347	420	-	-	-	1500	-	-	-	SP07U420	10

2-POLE, SPLIT-PHASE, 3-WIRE

Catalog Number	Nominal Voltage (VAC)	Maximum Continuous Operating Voltage (MCOV, VAc)				Voltage Protection Rating (VPR, VAC)				replacement plug	I_n (kA)
		L-N	L-G	N-G	L-L	L-N	L-G	N-G	L-L	L1, L2	
STP240S07(M)	120/240	175	-	-	350	600	-	-	1200	SP07U175	20
STP480S07(M)	240/480	275	-	-	550	900	-	-	1800	SP07U275	20

3-POLE, 3-PHASE DELTA, 4-WIRE

Catalog Number	Nominal Voltage (VAC)	Maximum Continuous Operating Voltage (MCOV, VAc)				Voltage Protection Rating (VPR, VAC)				replacement plug	I_n (kA)
		L-N	L-G	N-G	L-L	L-N	L-G	N-G	L-L	L1, L2, L3	
STP240D07(M)	240	-	275	-	550	-	900	-	1800	SP07U275	20
STP480D07(M)	480	-	550	-	1100	-	1500	-	3000	SP07U550	10

3-POLE, 3-PHASE WYE, 4-WIRE

Catalog Number	Nominal Voltage (VAC)	Maximum Continuous Operating Voltage (MCOV, VAc)				Voltage Protection Rating (VPR, VAC)				replacement plug	I_n (kA)
		L-N	L-G	N-G	L-L	L-N	L-G	N-G	L-L	L1, L2, L3	
STP208Y07(M)	120/208	175	-	-	350	600	-	-	1200	SP07U175	20
STP480Y07(M)	277/480	320	-	-	640	1000	-	-	2000	SP07U320	20
STP600Y07(M)	347/600	420	-	-	840	1500	-	-	2500	SP07U420	10
STP690Y07(M)	400/690	550	-	-	1100	1500	-	-	3000	SP07U550	10

4-POLE, 3-PHASE WYE, 5-WIRE, INCLUDING N-G MODE

Catalog Number	Nominal Voltage (VAC)	Maximum Continuous Operating Voltage (MCOV, VAc)				Voltage Protection Rating (VPR, VAC)				replacement plug		I_n (kA)
		L-N	L-G	N-G	L-L	L-N	L-G	N-G	L-L	L1, L2, L3	N-G	
STP208YN07(M)	120/208	175	175	175	350	600	1200	600	1200	SP07U175	SP07U175	20
STP480YN07(M)	277/480	320	495	175	640	1000	1500	600	2000	SP07U320	SP07U175	20
STP600YN07(M)	347/600	420	695	275	840	1500	2000	800	2500	SP07U420	SP07U275	10
STP690YN07(M)	400/690	550	870	320	1100	1500	2500	1000	3000	SP07U550	SP07U320	10

4-POLE, 3-PHASE DELTA HIGH-LEG, 5-WIRE, INCLUDING N-G MODE

Catalog Number	Nominal Voltage (VAC)	Maximum Continuous Operating Voltage (MCOV, VAc)				Voltage Protection Rating (VPR, VAC)				replacement plug			I_n (kA)
		L-L/L-G	L-N/N-G	H-L/H-G	H-N	L-L/L-G	L-N/ N-G	H-L/H-G	H-N	L1, L3	L2	N-G	
STP240HN07(M)	120/240	350	175	450	275	1200	600	1500	800	SP07U175	SP07U275	SP07U175	20
STP480HN07(M)	240/480	550/450	275/175	825/725	550	1500	800/600	2500/2000	1500	SP07U275	SP07U550	SP07U175	10

DIMENSIONS - STP SERIES

poles	a	
	IN	MM
1 Pole	0.69	17.5
2 Pole	1.38	35
3 Pole	2.07	52.5
4 Pole	2.76	70

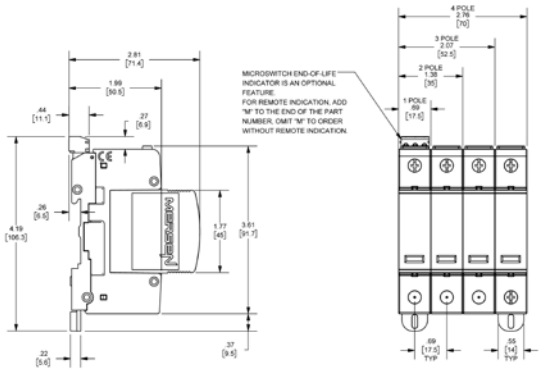

DIMENSIONS - ST SERIES

poles	a	
	IN	MM
1 Pole	0.7	17.8
2 Pole	1.39	35.5
3 Pole	2.1	53.3
4 Pole	2.8	71

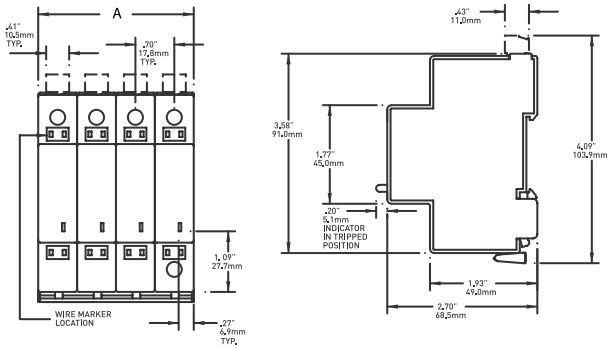

WIRING DIAGRAMS

1-POLE, SINGLE-Phase, 2-Wire

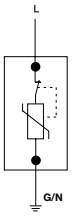

2-POLE, SPLIT-Phase, 3-Wire

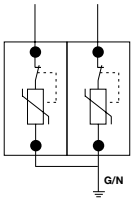

3-POLE, 3-Phase DELTA, 3-Wire

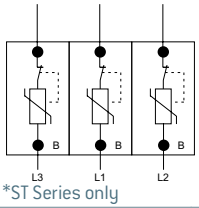

*ST Series only

3-POLE, 3-Phase DELTA, 3-Phase WYE, 4-Wire

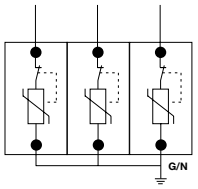

4-POLE, 3-Phase WYE, 4-Wire

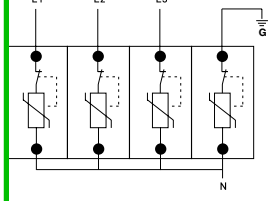

4-POLE, 3-Phase DELTA HIGH-LEG, 5-Wire

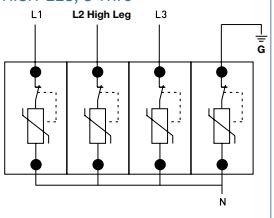

Single Phase
2 Wire + Ground

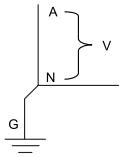

Split Phase
3 Wire + Ground

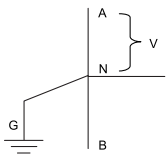

3 Phase Delta
3 Wire + Ground

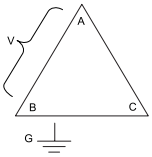

3 Phase Wye
4 Wire + Ground

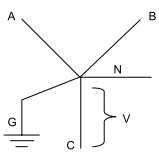

Hi-leg
Grounded Delta

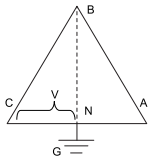

REMOTE STATUS INDICATOR

ST Series

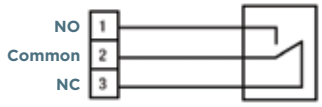

STP Series

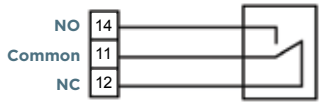

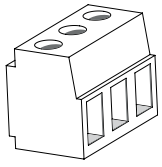

Signal Wire Range	#16 to #30 AWG
Terminal Torque	2.2 lb-in
Cont. between Comm + NO	Product Offline, Not Protected
Cont. between Comm + NC	Product Online, Protected
125 VAC - 3A max	

ST and STP Series: *for remote indication, add "M" to the end of the catalog number. For example, ST4803PYGM.*

(11)

ELECTRICAL EQUIPMENT

PHOENIX CONTACT

2.4amp POWER SUPPLY
2868651 STEP-PS/1AC/24DC/2.5

120V A.C. 15amp RECEPTACLE
5600639 (EM DUO-120/15/GFI/AUX)

Specification Section 16463

ACME

5KVA TRANSFORMER
T253014SS

INSTRUMENT POWER SUPPLY - 24 VDC

Power supply unit - STEP-PS/ 1AC/24DC/2.5 - 2868651

Please be informed that the data shown in this PDF Document is generated from our Online Catalog. Please find the complete data in the user's documentation. Our General Terms of Use for Downloads are valid (http://phoenixcontact.com/download)



Primary-switched STEP POWER power supply for DIN rail mounting, input: 1-phase, output: 24 V DC/2.5 A

Product Description

STEP POWER power supplies for distribution boards
The STEP POWER power supply range was developed especially for building automation. The low idling losses and high degree of efficiency ensure maximum energy efficiency. They allow flexible use and can be snapped onto the DIN rail or screwed onto an even surface.

Your advantages

- Flexible mounting by simply snapping onto the DIN rail or screwing onto a level surface
- Reliable power supply thanks to high MTBF (mean time between failures) of more than 500,000 hours and U/I characteristic curve
- Energy savings thanks to maximum energy efficiency and incredibly low idling losses

RoHS



Key Commercial Data

Packing unit	1 pc
GTIN	4 046356 163224
GTIN	4046356163224
Weight per Piece (excluding packing)	320.000 g
Custom tariff number	85044030
Country of origin	Vietnam

Technical data

Dimensions

Width	72 mm
Height	90 mm
Depth	61 mm

Power supply unit - STEP-PS/ 1AC/24DC/2.5 - 2868651

Technical data

Dimensions

Installation distance right/left	0 mm / 0 mm
Installation distance top/bottom	30 mm / 30 mm

Ambient conditions

Degree of protection	IP20
Ambient temperature (operation)	-25 °C ... 70 °C (> 55° C derating : 2.5%/K)
Ambient temperature (storage/transport)	-40 °C ... 85 °C
Max. permissible relative humidity (operation)	≤ 95 % (at 25 °C, non-condensing)
Climatic class	3K3 (in acc. with EN 60721)
Degree of pollution	2

Input data

Nominal input voltage range	100 V AC ... 240 V AC
Input voltage range	85 V AC ... 264 V AC
	95 V DC ... 250 V DC
AC frequency range	45 Hz ... 65 Hz
Frequency range DC	0 Hz
Current consumption	0.8 A (120 V AC)
	0.4 A (230 V AC)
Nominal power consumption	124.3 VA
Inrush current	< 15 A (typical)
Mains buffering time	typ. 20 ms (120 V AC)
	typ. 100 ms (230 V AC)
Input fuse	3.15 A (slow-blow, internal)
Recommended breaker for input protection	6 A ... 16 A (Characteristics B, C, D, K)
Power factor (cos phi)	0.56
Type of protection	Transient surge protection
Protective circuit/component	Varistor

Output data

Nominal output voltage	24 V DC ±1 %
Setting range of the output voltage (U_{Set})	22.5 V DC ... 29.5 V DC (> 24 V DC, constant capacity restricted)
Nominal output current (I_N)	2.5 A (-25 °C ... 55 °C)
	2.75 A (-25°C ... 40°C permanent)
Output current I_{max}	4.4 A
Derating	55 °C ... 70 °C (2.5%/K)
Connection in parallel	Yes, for redundancy and increased capacity
Connection in series	yes
Feedback voltage resistance	≤ 35 V DC

Power supply unit - STEP-PS/ 1AC/24DC/2.5 - 2868651

Technical data

Output data

Protection against overvoltage at the output (OVP)	≤ 35 V DC
Control deviation	< 1 % (change in load, static 10 % ... 90 %)
	< 2 % (change in load, dynamic 10 % ... 90 %)
	< 0.1 % (change in input voltage ±10 %)
Residual ripple	< 80 mV_{PP} (20 MHz)
Output power	60 W
Typical response time	< 0.5 s
Peak switching voltages nominal load	< 40 mV_{PP} (20 MHz)
Maximum power dissipation in no-load condition	< 0.7 W
Power loss nominal load max.	9.9 W

General

Net weight	0.27 kg
Operating voltage display	Green LED
Efficiency	> 86 % (for 230 V AC and nominal values)
	> 1061000 h (40 °C)
Insulation voltage input/output	4 kV AC (type test)
	3.75 kV AC (routine test)
Insulation voltage input / PE	3.5 kV AC (type test)
	2 kV AC (routine test)
Insulation voltage output / PE	500 V DC (routine test)
Degree of protection	IP20
Protection class	II (in closed control cabinet)
Housing material	Polycarbonate
Foot latch material	POM (Polyoxymethylen)
Mounting position	horizontal DIN rail NS 35, EN 60715
Assembly instructions	alignable: 0 mm horizontally, 30 mm vertically

Connection data, input

Connection method	Screw connection
Conductor cross section solid min.	0.2 mm²
Conductor cross section solid max.	2.5 mm²
Conductor cross section flexible min.	0.2 mm²
Conductor cross section flexible max.	2.5 mm²
Conductor cross section AWG min.	24
Conductor cross section AWG max.	12
Stripping length	6.5 mm
Screw thread	M3

Power supply unit - STEP-PS/ 1AC/24DC/2.5 - 2868651

Technical data

Connection data, output

Connection method	Screw connection
Conductor cross section solid min.	0.2 mm²
Conductor cross section solid max.	2.5 mm²
Conductor cross section flexible min.	0.2 mm²
Conductor cross section flexible max.	2.5 mm²
Conductor cross section AWG min.	24
Conductor cross section AWG max.	12
Stripping length	6.5 mm
Screw thread	M3

Standards

EMC requirements for noise immunity	EN 61000-6-1
	EN 61000-6-2
EMC requirements for noise emission	EN 61000-6-3
	EN 61000-6-4
Standard - Safety of transformers	EN 61558-2-16
Standard - Electrical safety	IEC 60950-1/VDE 0805 (SELV)
Standard – Electronic equipment for use in electrical power installations and their assembly into electrical power installations	EN 50178/VDE 0160 (PELV)
Standard – Safety extra-low voltage	IEC 60950-1 (SELV) and EN 60204-1 (PELV)
Standard - Safe isolation	DIN VDE 0100-410
Standard – Protection against shock currents, basic requirements for protective separation in electrical equipment	EN 50178
Standard – Limitation of mains harmonic currents	EN 61000-3-2
Rail applications	EN 50121-4

Conformance/approvals

UL approvals	UL/C-UL listed UL 508
	UL/C-UL Recognized UL 60950-1
	UL ANSI/ISA-12.12.01 Class I, Division 2, Groups A, B, C, D T3C (Hazardous Location)
	NEC Class 2 as per UL 1310
CSA	CSA-C22.2 No. 107.1-01
Shipbuilding approval	DNV GL (EMC B), ABS, LR, RINA, NK, BV

EMC data

Electromagnetic compatibility	Conformance with EMC Directive 2014/30/EU
Low Voltage Directive	Conformance with Low Voltage Directive 2014/35/EC
Electrostatic discharge	EN 61000-4-2
Contact discharge	6 kV (Test Level 3)

Power supply unit - STEP-PS/ 1AC/24DC/2.5 - 2868651

Technical data

EMC data

Discharge in air	8 kV (Test Level 3)
Electromagnetic HF field	EN 61000-4-3
Frequency range	80 MHz ... 1 GHz
Test field strength	10 V/m
Frequency range	1 GHz ... 2 GHz
Test field strength	10 V/m
Frequency range	2 GHz ... 3 GHz
Test field strength	10 V/m
Comments	Criterion A
Fast transients (burst)	EN 61000-4-4
Input	4 kV (Test Level 4 - asymmetrical)
Output	2.2 kV (Test Level 3 - asymmetrical)
Comments	Criterion A
Surge voltage load (surge)	EN 61000-4-5
Input	2 kV (Test Level 3 - symmetrical)
	4 kV (Test Level 4 - asymmetrical)
Output	1 kV (Test Level 2 - symmetrical)
	0.5 kV (Test Level 1 - asymmetrical)
Comments	Criterion A
Conducted interference	EN 61000-4-6
Frequency range	10 kHz ... 15 kHz
	0.15 MHz ... 80 MHz
Voltage	3 V (Test Level 2)
	10 V (Test Level 3)
Comments	Criterion A
	Criterion A
Voltage dips	EN 61000-4-11

Environmental Product Compliance

REACh SVHC	Lead 7439-92-1
China RoHS	Environmentally Friendly Use Period = 25;
	For details about hazardous substances go to tab “Downloads”, Category “Manufacturer's declaration”

Drawings

Power supply unit - STEP-PS/ 1AC/24DC/2.5 - 2868651

Block diagram

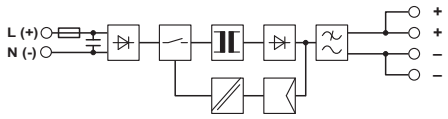

Classifications

eCl@ss

eCl@ss 10.0.1	27040701
eCl@ss 11.0	27040701
eCl@ss 4.0	27040700
eCl@ss 4.1	27040700
eCl@ss 5.0	27242200
eCl@ss 5.1	27242200
eCl@ss 6.0	27049000
eCl@ss 7.0	27049002
eCl@ss 8.0	27049002
eCl@ss 9.0	27040701

ETIM

ETIM 2.0	EC001039
ETIM 3.0	EC001039
ETIM 4.0	EC002540
ETIM 5.0	EC002540
ETIM 6.0	EC002540
ETIM 7.0	EC002540

UNSPSC

UNSPSC 6.01	30211502
UNSPSC 7.0901	39121004
UNSPSC 11	39121004
UNSPSC 12.01	39121004
UNSPSC 13.2	39121004
UNSPSC 18.0	39121004
UNSPSC 19.0	39121004
UNSPSC 20.0	39121004
UNSPSC 21.0	39121004

Socket - EM-DUO 120/15/GFI/AUX - 5600639

Please be informed that the data shown in this PDF Document is generated from our Online Catalog. Please find the complete data in the user's documentation. Our General Terms of Use for Downloads are valid (http://phoenixcontact.com/download)



Rail-mounted dual power outlet with two 120 V AC/15 A receptacles equipped with ground fault circuit interruption (GFCI) for 35 mm DIN rail per EN 60715. GFCI protects against shock hazards associated with ground shorts. For enhanced safety, the grounding pin is located at the top to prevent shorting between the hot and neutral blades. Auxiliary terminals allow connection of auxiliary devices for protection by the GFCI outlet.
Housing color: Ivory. National version: USA. Connection type: Screw.

RoHS

Key Commercial Data

Packing unit	1 pc
GTIN	4 046356 687973
GTIN	4046356687973
Weight per Piece (excluding packing)	321.400 g
Custom tariff number	85366990
Country of origin	United States

Technical data

Dimensions

Width	82 mm
Height	135 mm
Depth	49 mm

Ambient conditions

Ambient temperature (operation)	-35 °C ... 60 °C

General

Nominal voltage U_N	125 V AC
Nominal current I_N	15 A
For country-specific use in	USA
	Canada

Socket - EM-DUO 120/15/GFI/AUX - 5600639

Technical data

General

	Mexico
	Bahamas
	Bermuda
	Columbia
	Costa Rica
	Ecuador
	El Salvador
	Panama
	Puerto Rico
	Taiwan
	Venezuela
	Virgin Islands
Color	ivory
Insulating material	Polycarbonate & ABS blend
Standards/regulations	UL 508
	UL 943
	CSA 22.2
Response time	25 ms (6 mA)

Connection data

Conductor cross section solid max.	6 mm²
Conductor cross section flexible max.	4 mm²
Conductor cross section AWG max.	10
Connection method	Screw connection
Stripping length	8 mm
Screw thread	M3

Standards and Regulations

Standards/regulations	UL 508
	UL 943
	CSA 22.2

Environmental Product Compliance

China RoHS	Environmentally Friendly Use Period = 50
	For details about hazardous substances go to tab “Downloads”, Category “Manufacturer's declaration”

Socket - EM-DUO 120/15/GFI/AUX - 5600639

Classifications

eCl@ss

eCl@ss 4.0	27142305
eCl@ss 4.1	27142305
eCl@ss 5.0	27143412
eCl@ss 5.1	27142300
eCl@ss 6.0	27142300
eCl@ss 7.0	27142305
eCl@ss 8.0	27142305
eCl@ss 9.0	27142305

ETIM

ETIM 3.0	EC001325
ETIM 4.0	EC001663
ETIM 5.0	EC001663
ETIM 6.0	EC001663

UNSPSC

UNSPSC 6.01	30211806
UNSPSC 7.0901	39121406
UNSPSC 11	39121406
UNSPSC 12.01	39121406
UNSPSC 13.2	39121406

Approvals

Approvals

Approvals

UL Listed / cUL Listed / cULus Listed

Ex Approvals

Approval details

Socket - EM-DUO 120/15/GFI/AUX - 5600639

Approvals

UL Listed		http://database.ul.com/cgi-bin/XYV/template/LISEXT/1FRAME/index.htm	FILE E 238705

Nominal voltage UN	125 V
Nominal current IN	15 A
mm²/AWG/kcmil	30-10

cUL Listed		http://database.ul.com/cgi-bin/XYV/template/LISEXT/1FRAME/index.htm	FILE E 238705

Nominal voltage UN	125 V
Nominal current IN	15 A
mm²/AWG/kcmil	30-10

cULus Listed	

Phoenix Contact 2019 © - all rights reserved
http://www.phoenixcontact.com

ELECTRONIC/GLASS FUSES



GSA / GSA-V

Ceramic Body
Time Delay
1/4" x 1-1/4"
1-1/2" Axial Leads Optional

1/16A through 8A, 250VAC, UL Listed - 10,12,15A, 250V UL Recognized
1/16A through 8A, 250VAC, CSA Certified - 10, 12, 15A, 250V CSA Recognized
20A, 250VAC, 25 & 30A, 125VAC

Standard Fuse Ampere Ratings

CATALOG NUMBER	AXIAL LEAD CAT. NO	AMPERE RATING	VOLTS	I.R.
GSA1/16	GSA-V1/16	1/16A	250V	1
GSA1/10	GSA-V1/10	1/10A	250V	1
GSA1/8	GSA-V1/8	1/8A	250V	1
GSA15/100	GSA-V15/100	15/100A	250V	1
GSA175/1000	GSA-V175/1000	175/1000A	250V	1
GSA3/16	GSA-V3/16	3/16A	250V	1
GSA2/10	GSA-V2/10	2/10A	250V	1
GSA1/4	GSA-V1/4	1/4A	250V	1
GSA3/10	GSA-V3/10	3/10A	250V	1
GSA3/8	GSA-V3/8	3/8A	250V	1
GSA4/10	GSA-V4/10	4/10A	250V	1
GSA1/2	GSA-V1/2	1/2A	250V	1
GSA6/10	GSA-V6/10	6/10A	250V	1
GSA7/10	GSA-V7/10	7/10A	250V	1
GSA3/4	GSA-V3/4	3/4A	250V	1
GSA8/10	GSA-V8/10	8/10A	250V	1
GSA1	GSA-V1	1A	250V	1
GSA1-1/4	GSA-V1-1/4	1-1/4A	250V	2
GSA1-1/2	GSA-V1-1/2	1-1/2A	250V	2
GSA1-6/10	GSA-V1-6/10	1-6/10A	250V	2
GSA2	GSA-V2	2A	250V	2
GSA2-1/4	GSA-V2-1/4	2-1/4A	250V	2
GSA2-1/2	GSA-V2-1/2	2-1/2A	250V	2
GSA2-8/10	GSA-V2-8/10	2-8/10A	250V	2
GSA3	GSA-V3	3A	250V	2
GSA3-2/10	GSA-V3-2/10	3-2/10A	250V	2
GSA3-1/2	GSA-V3-1/2	3-1/2A	250V	2
GSA4	GSA-V4	4A	250V	3
GSA5	GSA-V5	5A	250V	3
GSA6	GSA-V6	6A	250V	3
GSA6-1/4	GSA-V6-1/4	6-1/4A	250V	3
GSA7	GSA-V7	7A	250V	3
GSA8	GSA-V8	8A	250V	3
GSA10	GSA-V10	10A	250V	4
GSA12	GSA-V12	12A	250V	4
GSA15	GSA-V15	15A	250V	4
GSA20	GSA-V20	20A	250V	5
GSA25	GSA-V25	25A	125V	6
GSA30	GSA-V30	30A	125V	6

1. 250VAC @ 35A I.R./125VAC @ 10kA I.R.
2. 250VAC @ 100A I.R./125VAC @ 10kA I.R.
3. 250VAC @ 200A I.R./125VAC @ 10kA I.R.
4. 250VAC @ 750A I.R./125VAC @ 10kA I.R.
5. 250VAC @ 400A I.R./125VAC @ 10KA I.R.
6. 125VAC @ 400A I.R.

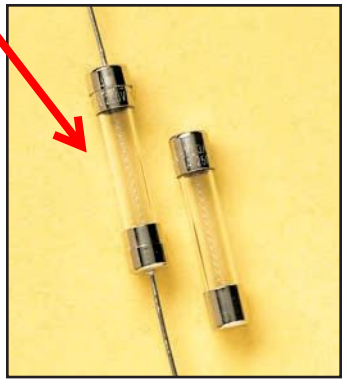

GDL / GDL-V

Glass Body
Time Delay
1/4" x 1-1/4"
1-1/2" Axial Leads Optional

1/16A through 8A, 250VAC, UL Listed and CSA Certified
10A through 15A, 125VAC, UL Listed and CSA Certified
20A through 30A, 32VAC, UL Listed to U.S. and Canadian safety standards

Standard Fuse Ampere Ratings

CATALOG NUMBER	AXIAL LEAD CAT. NO	AMPERE RATING	VOLTS	I.R.
GDL1/16	GDL-V1/16	1/16A	250V	1
GDL1/10	GDL-V1/10	1/10A	250V	1
GDL1/8	GDL-V1/8	1/8A	250V	1
GDL15/100	GDL-V15/100	15/100A	250V	1
GDL175/1000	GDL-V175/1000	175/1000A	250V	1
GDL3/16	GDL-V3/16	3/16A	250V	1
GDL2/10	GDL-V2/10	2/10A	250V	1
GDL1/4	GDL-V1/4	1/4A	250V	1
GDL3/10	GDL-V3/10	3/10A	250V	1
GDL3/8	GDL-V3/8	3/8A	250V	1
GDL4/10	GDL-V4/10	4/10A	250V	1
GDL1/2	GDL-V1/2	1/2A	250V	1
GDL6/10	GDL-V6/10	6/10A	250V	1
GDL7/10	GDL-V7/10	7/10A	250V	1
GDL3/4	GDL-V3/4	3/4A	250V	1
GDL8/10	GDL-V8/10	8/10A	250V	1
GDL1	GDL-V1	1A	250V	1
GDL1-1/4	GDL-V1-1/4	1-1/4A	250V	2
GDL1-1/2	GDL-V1-1/2	1-1/2A	250V	2
GDL1-6/10	GDL-V1-6/10	1-6/10A	250V	2
GDL2	GDL-V2	2A	250V	2
GDL2-1/4	GDL-V2-1/4	2-1/4A	250V	2
GDL2-1/2	GDL-V2-1/2	2-1/2A	250V	2
GDL2-8/10	GDL-V2-8/10	2-8/10A	250V	2
GDL3	GDL-V3	3A	250V	2
GDL3-2/10	GDL-V3-2/10	3-2/10A	250V	2
GDL4	GDL-V4	4A	250V	3
GDL5	GDL-V5	5A	250V	3
GDL6	GDL-V6	6A	250V	3
GDL6-1/4	GDL-V6-1/4	6-1/4A	250V	3
GLD7	GDL-V7	7A	250V	3
GLD8	GDL-V8	8A	250V	3
GLD10	GDL-V10	10A	125V	4
GDL12	GDL-V12	12A	125V	4
GDL15	GDL-V15	15A	125V	4
GDL20	GDL-V20	20A	32V	5
GDL25	GDL-V25	25A	32V	5
GDL30	GDL-V30	30A	32V	5

1. 250VAC @ 35A I.R./125VAC @ 10kA I.R.
2. 250VAC @ 100A I.R./125VAC @ 10kA I.R.
3. 250VAC @ 200A I.R./125VAC @ 10kA I.R.
4. 125VAC @ 10kA I.R.
5. 32VAC @ 300A I.R.

Gross Automation (877) 268-3700 · www.ferrazshawmutsales.com · sales@grossautomation.com

Product Specifications
Ampere Range

1/16-30

Fuse Class

Supplemental

Speed/Characteristic

Time Delay

UL File Number

E33925

UL Category Code

JDYX

CSA File number

JDYX7.E33925

REACH Compliant

Yes

Harmonized System

853610

FEWER SPECIFICATIONS

RW-100 SP-1 PANEL



* Representative image

T253014SS

by Acme Electric
Catalog ID: T253014SS

Prop65_Cancer&Reproductive

Low Voltage Distribution Transformer - Single Phase, 240X480 - 120/240V, 5kVA, 316 Stainless Steel

- Quite operation with sound levels below NEMA standards
- Electrostatic shield for enhanced protection

Product Details

General

ANFC Taps	2
BNFC Taps	2
Construction	Encapsulated
Electrostatic Shield	Shielded
Max Temperature Rise	115 Degrees Celsius
Mounting Type	Wall
Primary Voltage	240 X 480
Product Category	Dry Type Distribution Transformer
Secondary Voltage	120/240 V
Taps % Steps	2.5%
UL Insulation Class	180°C
UPC	047503130575
Winding Material	CU
kVA	5

Dimensions

Height	14.38 in
Length	7.13 in
Weight	75 lb
Width	10.31 in

Electrical Ratings

Frequency Rating	60 Hz
Primary Voltage	240 X 480 V

Certifications and Compliance

CSA Standard	C22.2 No. 47
Nema Rating	NEMA 3R
UL Standard	UL 506

(12)

VARIABLE FREQUENCY DRIVE

Specification Section 16151-2.2

Allen-Bradley
Powerflex 755

50HP, 65amp VFD
20G11ND065JA0NNNNN

VFD LOAD SIDE HARMONIC FILTER

Specification Section 16151-2.1C

TCI

DV/DT FILTER
V1K80A00

PowerFlex® 750-Series AC Drives

Allen-Bradley

Designed for Ease of Use, Integration and Application Flexibility



LISTEN.
THINK.
SOLVE.®

Allen-Bradley • Rockwell Software

Rockwell Automation

PowerFlex® 750-Series AC Drives
The Power and Control You Need

With a complete power range of 0.75 to 1500 kW (1 to 2000 Hp) and 400/480 and 600/690 volt availability, the PowerFlex 750-Series is a comprehensive drive family providing productivity-enhancing benefits to a wide range of global applications.



The PowerFlex 753 and 755 AC drives offer more selection for control, communications, safety and supporting hardware options than any other drives in their class.

The PowerFlex 750-Series of AC drives was designed with your needs in mind. Your need for flexibility, productivity and ease of use has been considered in every detail of these drives. The result is a family of AC drives that provides an exceptional user experience, from initial programming through operation.

This robust family of AC drives offers high performance for a wide variety of industrial applications. The PowerFlex 753 provides general purpose control for applications ranging up to 350 Hp/250 kW while the PowerFlex 755 provides maximum flexibility and performance up to 2000 Hp/1500 kW.

Consider these key features of the PowerFlex 750-Series drives and how they can help you maximize your productivity:

Simplified Integration with Logix – The PowerFlex 753 and 755 offer seamless integration into the Logix environment for simplified and enhanced configuration, programming, commissioning, diagnostics and maintenance. Using either Add-on Profiles or embedded instructions*, you'll be able to reduce engineering time – and related costs – while improving the configuration, control and collection of data.

Communications – The PowerFlex 750-Series supports a comprehensive range of network protocols to ease integration into your architecture. The PowerFlex 755 features an embedded EtherNet/IP™ port, allowing you to easily manage drive data over EtherNet/IP networks. In addition, a dual-port EtherNet/IP option module for the PowerFlex 750-Series provides flexible and cost-effective ways to apply EtherNet/IP, including Device Level Ring functionality.

Safe Torque-off and Safe Speed Monitor – Help protect personnel and equipment while reducing machine downtime with safety solutions up to and including PLe/SIL, Cat 3 and Cat 4. These safety options provide a choice for safety levels depending on your application requirements.

DeviceLogix™ – Controls outputs and manages status information locally within the drive, allowing you to operate the drive independently or complementary to supervisory control.

Configure for Your Application – Each drive has a slot-based hardware architecture that reduces unnecessary add-ons and gives you the flexibility to select option cards to suit your application and expand your drive for future needs. Supported hardware control options are common for the series to help reduce your inventory and spare parts requirements.

Predictive Diagnostics – Prevent unplanned downtime with predictive diagnostics and built-in protection features to help guard your investment. These settings allow the PowerFlex 750-Series to keep track of information that affects the life of the drive components. PowerFlex 755 drives 250 kW/350 Hp and larger have additional diagnostic features including built-in protection devices.

Application-matched Packaging – Gain additional flexibility with packaging options that address a range of application and environmental protection requirements.

Feedback – Options include Universal, Encoder and Dual Encoder feedback options. The Universal Feedback option includes multiple feedback interfaces to support a wide range of applications. Interfaces supported are Incremental, EnDat and Hiperface for Stegmann and Heidenhain high resolution feedback, SSI and BiSS for rotary and linear applications. The drives also provide automatic feedback loss switchover.

* PowerFlex 755 uses embedded instructions



PowerFlex 753 AC Drive

The PowerFlex 753 is ideal for general purpose applications requiring speed or torque control up to 250 kW/350 Hp. Embedded I/O along with three option slots for safety, feedback, communications, 24V power or additional I/O make the drive a flexible, cost-effective solution.



PowerFlex 755 AC Drive

PowerFlex 755 is ideal for applications requiring positioning, speed or torque control up to 1500 kW/2000 Hp. The PowerFlex 755 is easily integrated with the embedded Ethernet port and has five option slots to support additional options for feedback, I/O, safety, communications, and auxiliary 24V DC control power.

The PowerFlex 755 AC drive can be integrated with a ControlLogix® or CompactLogix™ Programmable Automation Controller (PAC) via drive instructions that are actually embedded in the PAC. This level of integration is specific to PowerFlex 755 drives on EtherNet/IP.

	PowerFlex 753	PowerFlex 755
400/480V 600V 690V	0.75 to 250 kW/1.0 to 350 Hp 1.0 to 300 Hp 7.5 to 250 kW	0.75 to 1400 kW/1.0 to 2000 Hp 1.0 to 1500 Hp 7.5 to 1500 kW
Logix Integration	• Automatic Device Configuration (with 20-750-ENETR and Studio 5000**) • Add-on Profiles	• Embedded instructions in Studio 5000** • Automatic Device Configuration (with embedded port or 20-750-ENETR, and Studio 5000**) • Add-on Profiles
DeviceLogix Control Technology	✓	✓
Safety Options: Safe Torque-Off, Safe Speed Monitor	✓	✓
Predictive Diagnostics	✓	✓
Option Slots	3	5 (3 for frame 1)
Communications	Option modules available for: • EtherNet/IP™ • Dual-port EtherNet/IP • ControlNet™ • DeviceNet™ • And a variety of industrial networks	Embedded Ethernet port standard Option modules available for: • Dual-port EtherNet/IP • ControlNet • DeviceNet • And a variety of industrial networks
I/O	Embedded I/O standard • 3 Digital Inputs, 1 Relay Output, 1 Transistor Output, 1 Analog Input, 1 Analog Output, 1 PTC Input • Option cards for additional I/O	1 Digital Input standard • Option cards for additional I/O
Motor Types	• Induction Motors • Permanent Magnet Motors (Interior)	• Induction Motors • Permanent Magnet Motors (Surface and Interior)
Positioning	• Indexing	• Indexing • PCamming • Electronic Gearing • Position/Speed Profiling
Feedback	• Incremental	• Incremental • EnDat, Hiperface, SSI and BiSS • Absolute
Application Sets	Oil Well • Pump Jack & Pump Off Fibers • PJump & Traverse	Lifting • Torqprove* Oil Well • Pump Jack & Pump Off Fibers • PJump & Traverse
Conformal Coating	✓	✓

* See publication PFLEX-BR009 for more information on crane/hoist applications.

** Also previous versions of RSLogix 5000 software.

PowerFlex 750-Series AC Drive

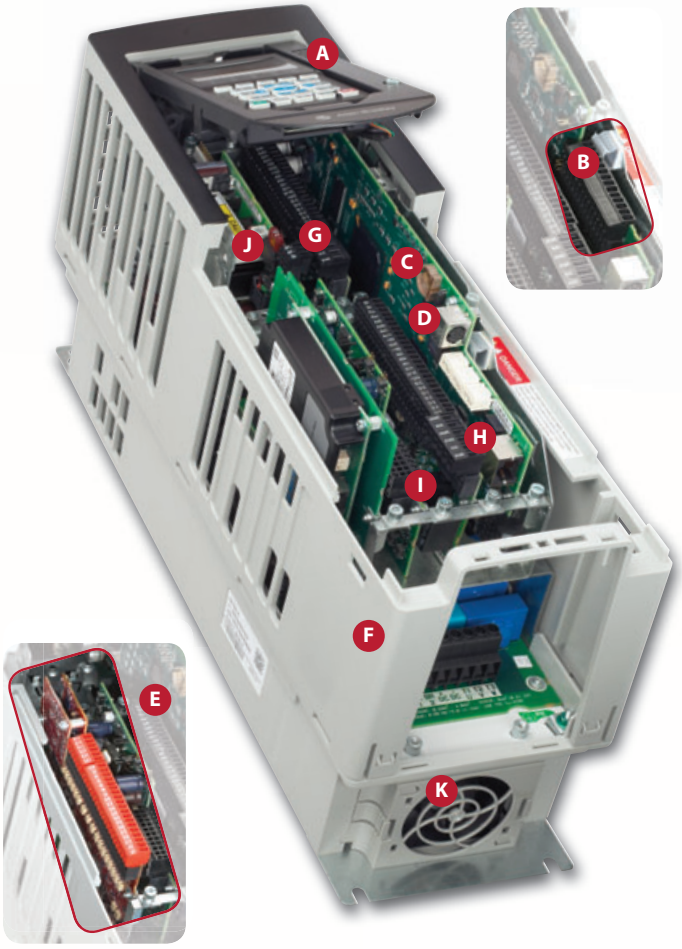

- **A** High-definition LCD display allows for six lines of text for more meaningful explanations of parameters and events.
- **B** Standard I/O on the PowerFlex 753 provides a cost-effective solution.
- **C** Real-time clock provides time-stamped events vs. run-time data.
- **D** Additional DPI for expanded programming capability.
- **E** Increase safety performance levels with the Safe Speed Monitor option card which includes an embedded safety relay.
- **F** Packaging options to meet application requirements.
- **G** DeviceLogix embedded control technology provides function block programming for stand-alone control of basic applications.
- **H** Easily configure, control and collect drive data with standard embedded Ethernet port on the PowerFlex 755.
- **I** Slot-based mechanical architecture to support additional options for I/O, feedback, safety, communications and auxiliary power supply.
- **J** Optional Auxiliary Power Supply maintains control and communications in event that main power is not present.
- **K** Easily assessable heat sink and internal fans.

e-Tools Simplify and Enhance Use of PowerFlex 750-Series Drives

Add-on Profiles

For simplified AC drive start-up and reduced development time, we've integrated Allen-Bradley® PowerFlex drive configuration with Studio 5000™ Logix Designer software (formerly RSLogix™ 5000). This single-software approach simplifies parameter and tag programming while still allowing stand-alone drive software tool use on the factory floor.

Embedded Instructions

The PowerFlex 755 AC drive can be configured with drive instructions embedded in Allen-Bradley ControlLogix and CompactLogix Programmable Automation Controllers (PAC). These are the same configuration parameters and programming instructions used by Allen-Bradley Kinetix® servo drives, providing a common, enhanced user experience.



DriveTools™ SP Software Suite

A powerful PC-based software suite, for programming, configuring and troubleshooting.

- DriveExecutive™ – for online/offline configuration and management of drives and drive peripherals
- DriveObserver™ – for real-time trending of drive information

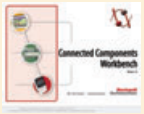

Connected Components Workbench™

Programming and configuration software supports all PowerFlex drives, Micro800™ controllers and PanelView™ component graphic terminals. This software leverages proven Rockwell Automation and Microsoft® Visual Studio® technologies for fast and easy controller programming, drive configuration and integration with the HMI editor.

PowerFlex 755 Floor Mount AC Drives

In addition to all the options and benefits available in the PowerFlex 750-Series, the PowerFlex 755 drives 250 kW/350 Hp and larger offer added benefits for maintenance and installation flexibility.

1. Control pod is common with smaller ratings providing embedded Ethernet port and 5 slots for option modules, and can be remote mounted (up to 23 m) for hassle-free access to low voltage control.
2. Roll in/out design makes the drive easy to install and service by allowing complete removal from cabinet, providing generous room for wiring behind the drive. Power wiring can stay connected while unit is rolled out.
3. Adjustable terminals provide flexibility for wiring preferences such as top or bottom entry.
4. Integrated fusing eliminates need for separately mounted drive short circuit protection. Status is reported from the drive to ease troubleshooting.
5. Replaceable surge protector reduces downtime after incoming transient voltage events. Status is reported from the drive to ease troubleshooting.
6. Integrated DC link inductor enhances protection from power system events, and reduces input harmonics.
7. Sealed cooling channel uses external air for main cooling, reducing contamination exposure for electronics.
8. Modular construction allows fast and easy replacement of parts (e.g., main blower, capacitor assembly, circuit boards), minimizing production downtime.

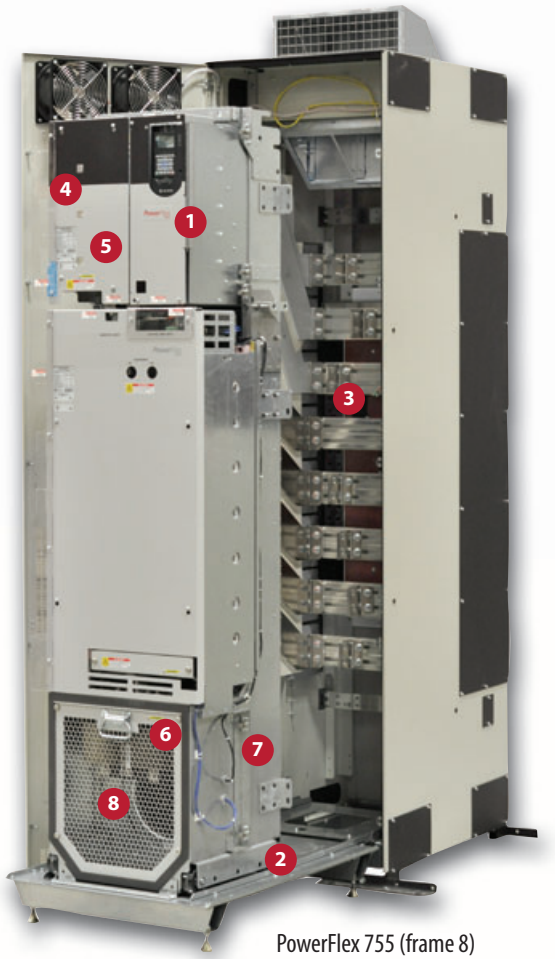

PowerFlex 755 (frame 8)
250 to 500 kW/350 to 600 Hp

PowerFlex 755 Drives with Option Bays

All PowerFlex 755 floor mount drives are available with a power option bay which provides a cost-effective solution for power disconnect and other popular power options. Based on customer specifications, components are correctly sized and optimized for the appropriate overload duty rating. By eliminating the need for accessory sizing and the possibility of installation errors, the option bay helps to reduce engineering and installation time and costs. Option Bays are available with both IP20 and IP54 environmental ratings.

View a video on the benefits of the PowerFlex 755 at:
http://ab.rockwellautomation.com/Drives/PowerFlex-755

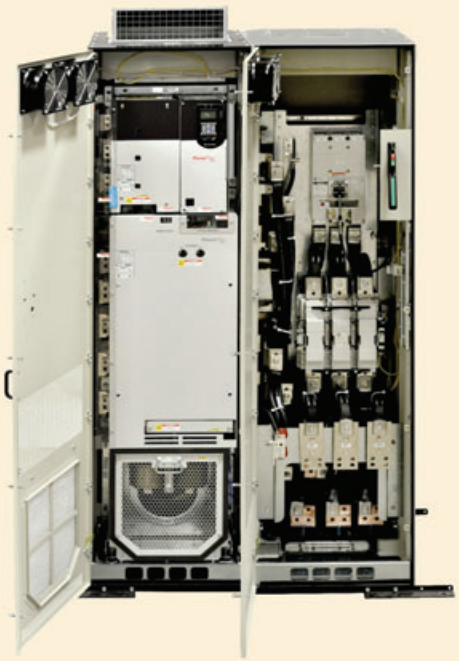





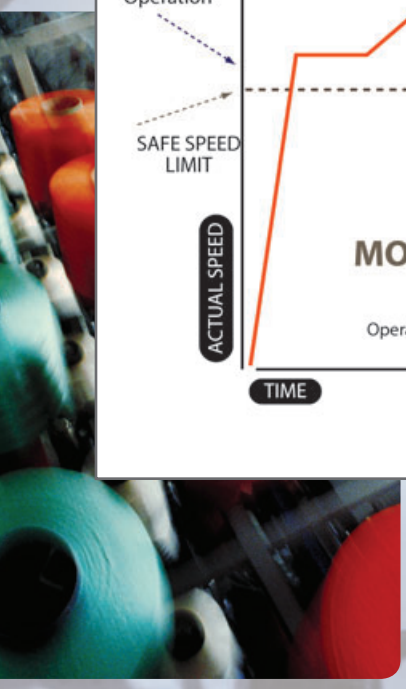

Safety

To help you protect personnel and assets while improving machine uptime, the PowerFlex 750-Series is available with two safety options:

1. Safe Torque-Off option or
2. Safe Speed Monitor option.

Safe Torque-Off is ideal for safety-related applications requiring removal of rotational power to the motor without removing power from the drive. Safe Torque-Off functionality offers the benefit of quick start-up after a demand on the safety system, helps reduce wear from repetitive start-up, and provides safety ratings up to and including SIL, PLe, and CAT 3.

The Safe Speed Monitor option provides a solution for applications that can benefit from access to a safety zone while there is limited motion. It helps you safely monitor and control the speed of your application, which allows operators to perform process or maintenance work without stopping the machine.

In addition, Safe Speed Monitor has an integrated monitoring relay to save additional panel-space installation labor. This option carries a safety rating up to and including SIL, PLe and Cat 4.

The Safe Speed Monitor option provides the following functionality:

- Safe Torque-Off
- Stop Categories 0, 1 and 2
- Safe Stop
- Safe Limited Speed
- Safe Maximum Speed
- Safe Maximum Acceleration
- Safe Direction
- Zero-Speed Monitoring
- Door Control and Monitoring
- Enabling switch input

The Right Packaging for Your Application

Because application conditions and environments vary, PowerFlex 750-Series drives are available with a choice of packaging options. From highly flexible IP00 open styles to MCC-style cabinets and other features that help provide additional protection, there's a PowerFlex 750-Series drive with the right packaging to help you meet productivity goals.

PowerFlex 755 Floor Mount Drives with IP00, NEMA/UL Open Type Ratings

The PowerFlex 755 IP00, NEMA/UL Open Type drives are designed to provide packaging flexibility, including the option for either vertical or horizontal mounting orientations. This option is available in PowerFlex 755 floor mount drives with ratings up to 1500 kW/2000 Hp.

PowerFlex 750-Series Drives with IP54/UL Type 12 Ratings

For applications requiring additional protection from harsh environments, PowerFlex 753 and 755 drives are available with IP54/UL Type 12 enclosures. These enclosures help protect the drive from dust and splashing water and are appropriate for moderately harsh indoor environments.



PowerFlex 750-Series drives are available with a variety of enclosure options and ratings including IP00, IP20, IP54 (above left) and an extra protection flange mount (above right).

Enclosure	Rating	Temperature Range	PowerFlex 753	PowerFlex 755
Wall Mount	IP00, IP20, NEMA/UL Open Type	0 – 50 ˚C 32 – 122 ˚F	X	X
Extra Protection Flanged Mount	Front: IP00, IP20 & NEMA/UL Open Type Back: IP66 & NEMA/UL Type 4X	Front: 0 – 50 ˚C 32 – 122 ˚F Back: 0 – 40 ˚C 32 – 104 ˚F	X	X
Extra Protection Wall Mount	IP54 & NEMA/UL Type 12	0 – 40 ˚C 32 – 104 ˚F	X	X
NEMA 1 Kit	Converts Open Type to NEMA/UL Type	0 – 40 ˚C 32 – 104 ˚F	X	X
Floor Mount	IP20, IP54, IP00	0 – 40 ˚C 32 – 104 ˚F		X*

* Floor mount drives are available for PowerFlex 755 higher power ratings (above 250 kW/350 Hp) only.
PowerFlex 755 higher power drives (ratings above 250 kW/350 Hp) are available in IP00, IP20 and IP54 enclosure ratings.

Premier Integration Simplifies Development, Use and Maintenance

By combining the advanced capabilities of the Rockwell Automation Integrated Architecture™ and the communication capabilities of PowerFlex drives, you can achieve an exceptional level of integration between drives and controllers. The benefits of this integration range from reduced development time to simplified maintenance.

To achieve this integration, PowerFlex drives use add-on profiles in Studio 5000™ Logix Designer software (formerly RSLogix™ 5000) to streamline drive installation. Add-on profiles minimize the need to individually program the required parameters and tags. The result is simplified programming, which puts an end to the need to frequently refer back to user manuals for specific parameter and tag information. And all PowerFlex drives on EtherNet/IP are able to take advantage of these add-on profiles.

In addition, Automatic Device Configuration (ADC) support for the PowerFlex 750-Series drives – shown below – helps reduce downtime.

Easy-to-use tools help reduce development time and require no specialized knowledge – Wizards with advanced graphical interfaces walk you through drive parameter configuration.

Eliminate errors associated with using multiple software tools – Single development environment to configure and program your entire Logix drive system.

Access, edit and save drive information to the control system project with ease – Drive configuration is saved as part of the RSLogix project file (*.acd) and is also stored in the Logix controller, so there's no need to store and maintain multiple files – you only need one file.

Easily download global objects and faceplates – You can use the same tag names generated by the drive add-on profiles to utilize global objects and faceplates for a FactoryTalk® View HMI display

Easy to Maintain – Diagnostic, fault, alarm, and event information are integral to Studio 5000.

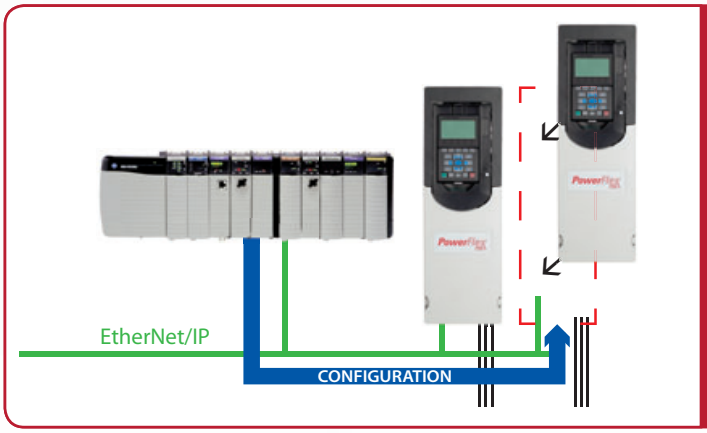

With Automatic Device Configuration (ADC), the Logix controller can automatically detect a replaced PowerFlex 753 or 755 drive and download all configuration parameters, eliminating the need for manual reconfiguration. (PowerFlex 753 AC drives require a dual-port EtherNet/IP communication card for ADC.)

DeviceLogix™ Control Technology

DeviceLogix control technology provides you with the flexibility to customize a drive to more closely match your application needs. DeviceLogix controls outputs and manages status information locally within the drive, allowing you to operate the drive independently or complementary to supervisory control, helping to improve system performance and productivity.

You can use the PowerFlex 750-Series DeviceLogix to:

- Speed reaction time by processing in the drive, which reduces dependency on network throughput
- Provide scaling, selector switches, or other data manipulations not already built into the drive
- Read inputs/write outputs and exclusively control the drive
- Provide an option for decision-making if communication is lost with main controller
- Control other PowerFlex drives via a Peer-to-Peer EtherNet/IP network

DeviceLogix is easily programmed via: RSLogix 5000 and DriveTools SP v 5.01.

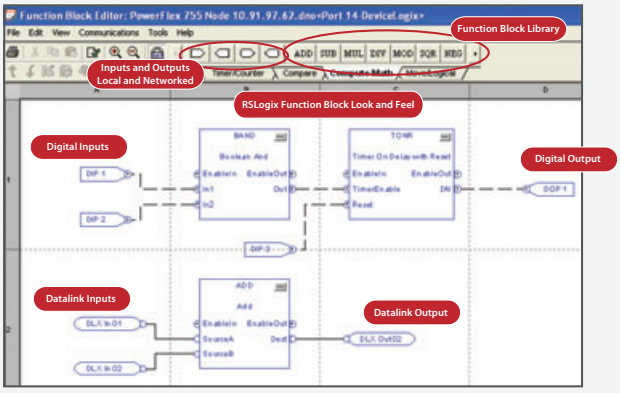

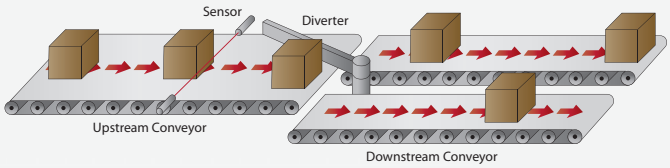

EtherNet/IP – A Single Network for Complete Machine Control

Connect Your Entire Enterprise

Benefit from the EtherNet/IP network for complete machine control that simplifies and enhances machine design.

- Low cost, high performance and easy to use as compared to a multi-network architecture
- Easily integrate any PowerFlex drive, I/O, smart actuators and any other EtherNet/IP connected device
- EtherNet/IP is an established, broadly-adopted network
- The PowerFlex 755 AC drive and Kinetix 6500 servo drive can reside on the same EtherNet/IP network and be programmed with a common set of motor control instructions available in ControlLogix and CompactLogix Programmable Automation Controllers

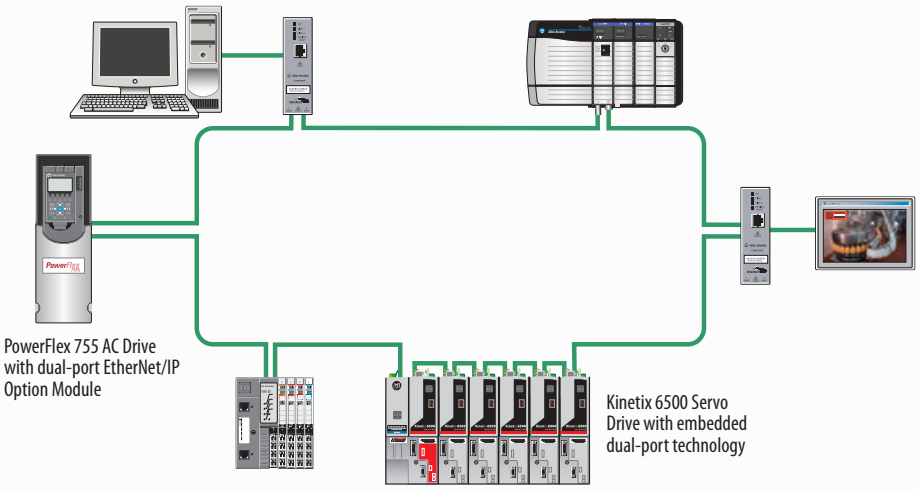

Device Level Ring (DLR) is an ODVA standard and provides fault tolerant connectivity for high drive availability. If one device on the EtherNet/IP network fails, the other devices are able to continue operation.

Dual-port EtherNet/IP Option Module for PowerFlex 750-Series AC Drives

The PowerFlex 750-Series Dual-port EtherNet/IP option module provides flexible and cost-effective ways to apply EtherNet/IP, and supports Ring, Linear and Star topologies as well as DLR functionality. DLR-based networks reduce configuration time and costs by minimizing the number of managed switches and reducing cabling needs. Users can create a single fault-tolerant DLR network that connects all components at the device level locally.

Information can be seamlessly communicated in real time to various levels of an organization, without requiring additional complexity. Getting real-time information at the right time and at the right levels of the manufacturing environment helps you enhance the agility of your business.

This solution supports optimal integration on a DLR level for the PowerFlex 755 via instructions embedded in the Logix controller, further enhancing integration into the Rockwell Automation Integrated Architecture. Only Allen-Bradley drives are able to offer optimal integration into the Integrated Architecture, providing simplified configuration, programming, commissioning, diagnostics and maintenance.

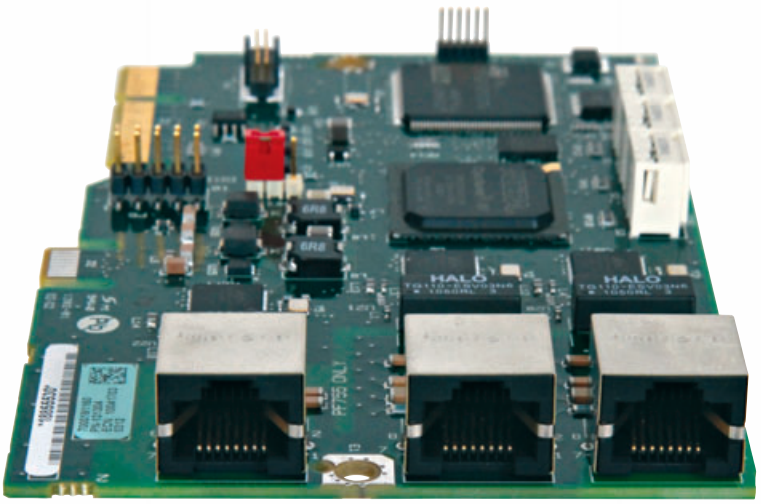

All PowerFlex 755 AC drives have a single embedded Ethernet port. This 750-Series option module provides the benefits of dual-port EtherNet/IP functionality for both the PowerFlex 753 and 755.

PowerFlex 753 and PowerFlex 755 AC Drive Specifications

Frame/Rating Cross-Reference						
	400V AC (540V DC) Input			480V AC (650V DC) Input		
Frame[1]	Amps	Normal Duty kW	Heavy Duty kW	Amps	Normal Duty Hp	Heavy Duty Hp
1	2.1	0.75	0.37	2.1	1	0.5
	3.5	1.5	0.75	3.4	2	1.5
	5	2.2	1.5	5	3	2
	8.7	4	2.2	8	5	3
	11.5	5.5	4	11	7.5	5
	15.4	7.5	5.5	14	10	7.5
2	2.1	0.75	0.75	2.1	1	1
	3.5	1.5	1.5	3.4	2	2
	5	2.2	2.2	5	3	3
	8.7	4	4	8	5	5
	11.5	5.5	5.5	11	7.5	7.5
	15.4	7.5	5.5	14	10	7.5
	22	11	7.5	22	15	10
3	30	15	11	27	20	15
	37	18.5	15	34	25	20
	43	22	18.5	40	30	25
4	60	30	22	52	40	30
	72	37	30	65	50	40
5	85	45	37	77	60	50
	104	55	45	96	75	60
6	140	75	55	125	100	75
	170	90	75	156	125	100
	205	110	90	186	150	125
	260	132	110	248	200	150
7	302	160	132	302	250	200
	367	200	160	361	300	250
	456	250	200	415	350	300

	600V AC, Three-Phase Drives				
	Output Amps[2]				
Frame	Cont.	1 Min.	3 Sec.	Normal Duty Hp	Heavy Duty Hp
3	1.7 (0.9)	1.9 (1.4)	2.6 (2.6)	1	0.5
	2.7 (1.7)	3.0 (2.6)	4.1 (4.6)	2	1
	3.9 (2.7)	4.3 (4.1)	5.9 (7.3)	3	2
	6.1 (3.9)	6.7 (5.9)	9.2 (10.5)	5	3
	9 (6.1)	9.9 (9.2)	12.1 (13.5)	7.5	5
	11 (9)	12.1 (13.5)	16.5 (24.3)	10	7.5
	17 (11)	18.7 (16.5)	25.5 (29.7)	15	10
	22 (17)	24 (26)	33 (46)	20	15
4	27 (22)	30 (33)	41 (59)	25	20
	32 (27)	35 (41)	48 (73)	30	25
5	41 (32)	45 (48)	62 (86)	40	30
	52 (41)	57 (62)	78 (111)	50	40

	600V AC Input					690V AC Input				
	Output Amps[2]			Normal Duty	Heavy Duty	Output Amps[2]			Normal Duty	Heavy Duty
Frame[1]	Cont.	1 Min.	3 Sec.	Hp	Hp	Cont.	1 Min.	3 Sec.	kW	kW
6	12 (9.1)	13.2 (13.7)	18 (18)	10	7.5	12 (9)	13.2 (13.5)	18 (18)	7.5	5.5
	18 (11.1)	19.8 (16.7)	27 (27)	15	10	15 (11.5)	16.5 (17.3)	22.5 (22.5)	11	7.5
	23 (18)	25.3 (27)	34.5 (34.5)	20	15	20 (15)	22 (22.5)	30 (30)	15	11
	24 (22)	26.4 (33)	36 (39.6)	20	20	23 (20)	25.3 (30)	34.5 (36)	18.5	15
	28 (23)	30.8 (34.5)	42 (42)	25	20	30 (23)	33 (34.5)	45 (45)	22	18.5
	33 (28)	36.3 (42)	49.5 (50.4)	30	25	34 (30)	37.4 (45)	51 (54)	30	22
	42 (33)	46.2 (49.5)	63 (63)	40	30	46 (34)	50.6 (51)	69 (69)	37	30
	53 (42)	58.3 (63)	79.5 (79.5)	50	40	50 (46)	55 (69)	75 (82.8)	45	37
	63 (52)	69.3 (78)	94.5 (94.5)	60	50	61 (50)	67.1 (75)	91.5 (91.5)	55	45
	77 (63)	84.7 (94.5)	116 (116)	75	60	82 (61)	90.2 (91.5)	123 (123)	75	55
	99 (77)	109 (116)	149 (149)	100	75	98 (82)	108 (123)	147 (148)	90	75
	125 (99)	138 (149)	188 (188)	125	100	119 (98)	131 (147)	179 (179)	110	90
	144 (125)	158 (188)	216 (225)	150	125	142 (119)	156 (179)	213 (214)	132	110
7	192 (144)	211 (216)	288 (288)	200	150	171 (142)	188 (213)	257 (257)	160	132
	242 (192)	266 (288)	363 (363)	250	200	212 (171)	233 (257)	318 (318)	200	160
	289 (242)	318 (318)	434 (436)	300	250	263 (212)	289 (289)	395 (395)	250	200

1 Frame ratings based on open type cabinet mount enclosures.
2 These drives have dual current ratings; one for normal duty applications, and one for heavy duty applications (in parenthesis). The drive may be operated at either rating.

Rockwell Automation
(http://www.rockwellautomation.com/)

20G11ND065JA0NNNNN

Description: PowerFlex 750-Series

BASE DRIVE INFORMATION

BULLETIN NUMBER
PowerFlex 755 AC Drive, with Embedded Ethernet/IP

VOLTAGE CLASS
480 VAC, 3 PH

OUTPUT CURRENT
65 Amps, 50HP ND, 40HP HD

ENCLOSURE TYPE
Open Type

INPUT TYPE
AC Input with DC Terminals

FRAME SIZE
Frame 4

EMC FILTERING OPTIONS
Filtered, CM Jumper Installed

DYNAMIC BRAKING
DB Transistor

HIM
Blank (No HIM)

Remote Mount HMI with Extension Cable Included (Dead-Front Mount)

POWEROHM RESISTOR/BRAKE MODULE SELECTION

IS THIS A LIFTING, HOISTING OR TROLLEY APPLICATION?
No

ACCESSORIES

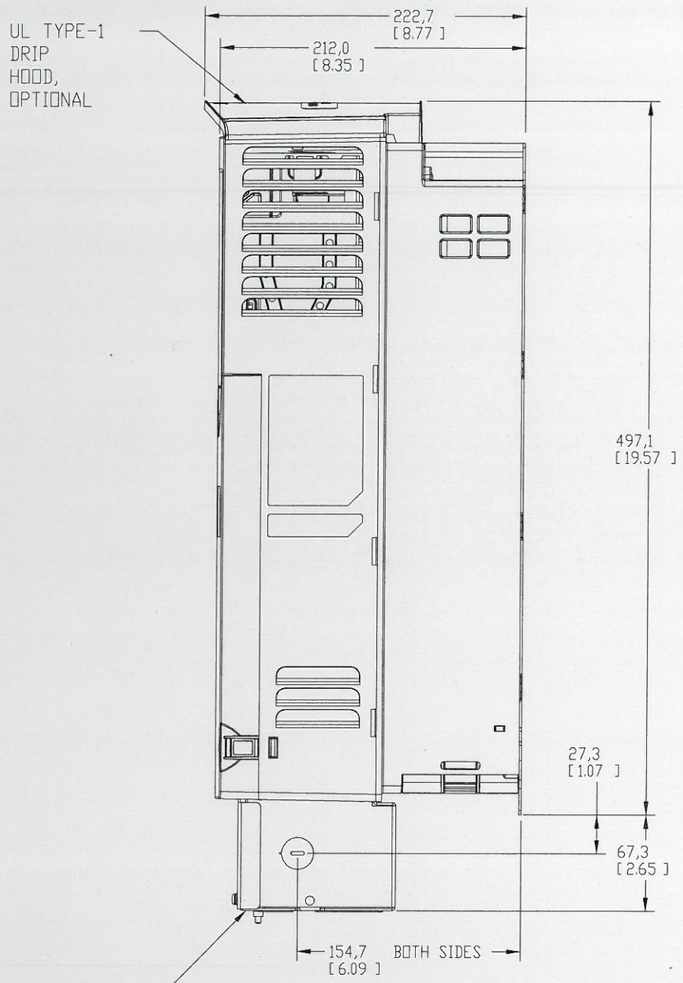

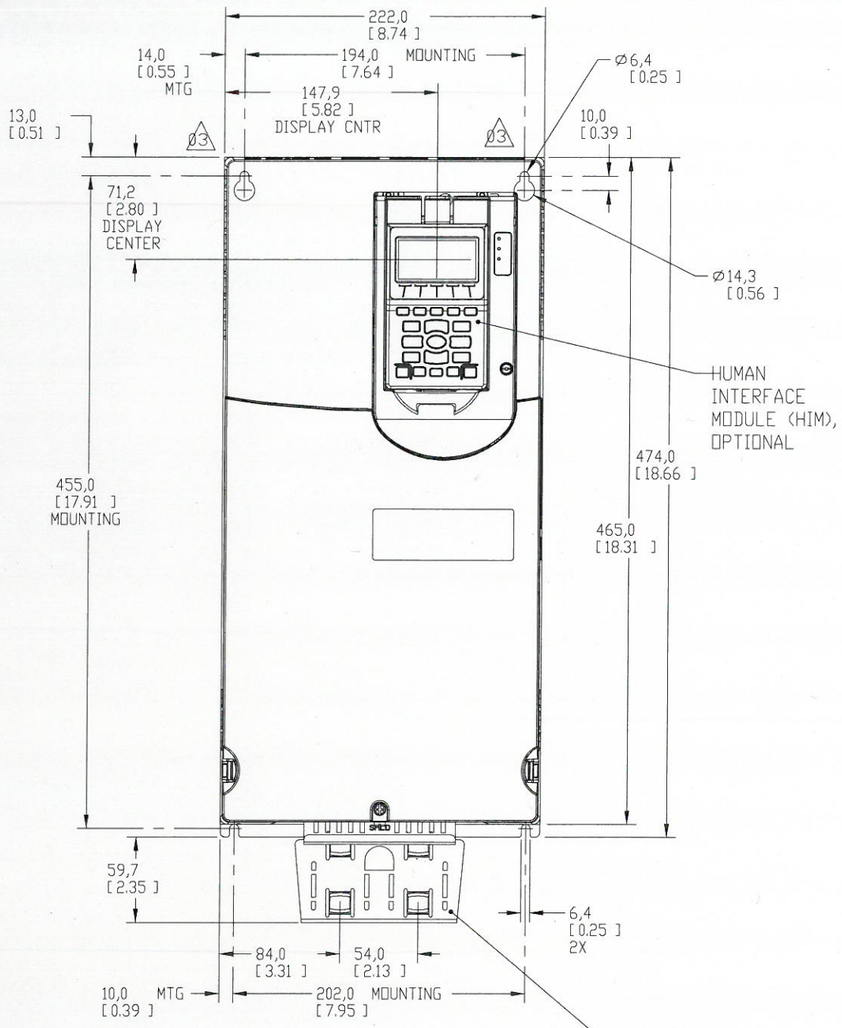

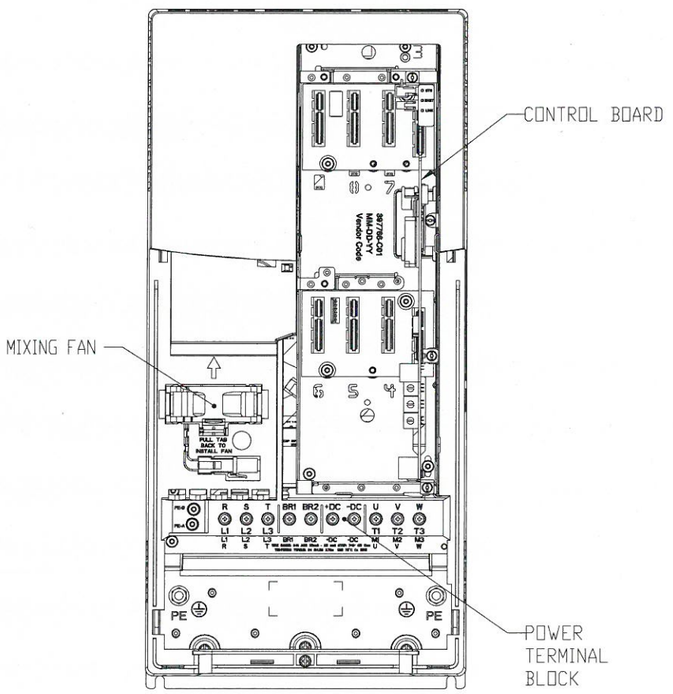

OPEN DRIVE WITH
COVER,
AND HIM BEZEL
REMOVED

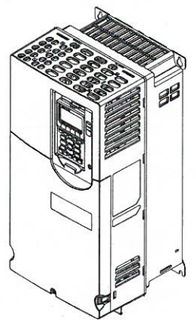

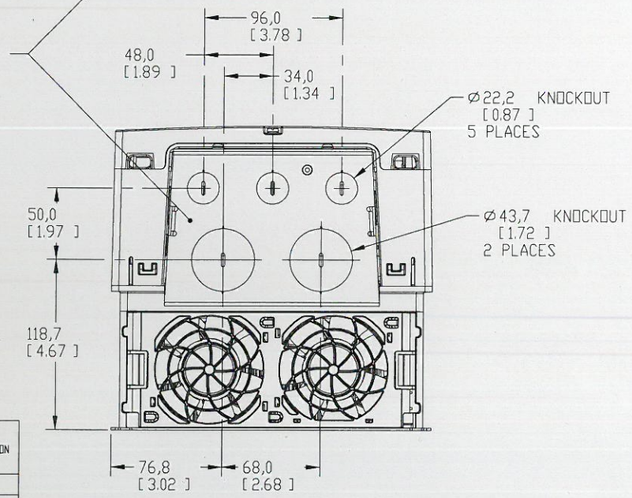

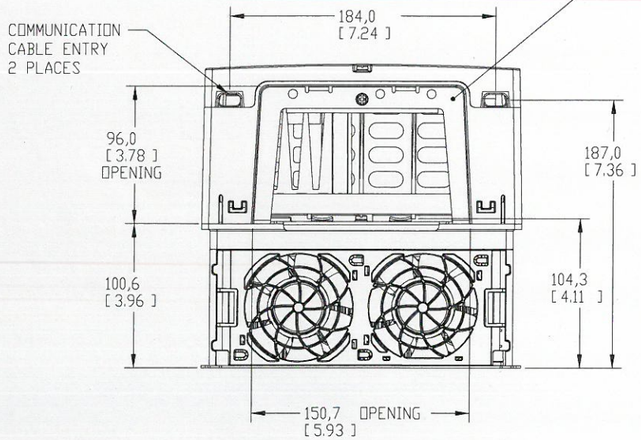

NOTES:

1.1. DIMENSIONS IN [ ] ARE IN INCHES.

PARTS MUST CONFORM TO APPLICABLE ROCKWELL AUTOMATION MANUFACTURING STANDARDS	
CAD DOCUMENT	
FILE NAME	396828-6

REFERENCES			OUTLINE				CONFIDENTIAL AND PROPRIETARY INFORMATION
REVISION AUTHORIZATION		DIMENSIONS APPLY BEFORE SURFACE TREATMENT	FRAME 4				THIS DOCUMENT CONTAINS CONFIDENTIAL AND PROPRIETARY INFORMATION OF ROCKWELL AUTOMATION, INC. AND MAY NOT BE USED, COPIED OR DISCLOSED TO OTHERS, EXCEPT WITH THE AUTHORIZED WRITTEN PERMISSION OF ROCKWELL AUTOMATION, INC.
		DIMENSIONS IN MILLIMETERS	POWERFLEX 750 SERIES				
		TOLERANCES UNLESS OTHERWISE SPECIFIED	Rockwell Automation				
		.X:± N/A					
03	1033267	.XX:± N/A	DR. R. MICHALSKI	DATE 04-20-07		SHEET 1 OF 4	
02	1032021	ANGLES:± N/A	CHKD. W.TOBIAS	DATE 8-21-07		DWG. 396828-6	
01	1028653		APPD. B.WEISS	DATE 8-21-07		SIZE D	

Reference Manual

Allen-Bradley

PowerFlex 750-Series AC Drives

Catalog Numbers 20F, 20G, 21G









Original Instructions

Allen-Bradley • Rockwell Software

Rockwell Automation

Important User Information

Read this document and the documents listed in the additional resources section about installation, configuration, and operation of this equipment before you install, configure, operate, or maintain this product. Users are required to familiarize themselves with installation and wiring instructions in addition to requirements of all applicable codes, laws, and standards.

Activities including installation, adjustments, putting into service, use, assembly, disassembly, and maintenance are required to be carried out by suitably trained personnel in accordance with applicable code of practice.

If this equipment is used in a manner not specified by the manufacturer, the protection provided by the equipment may be impaired.

In no event will Rockwell Automation, Inc. be responsible or liable for indirect or consequential damages resulting from the use or application of this equipment.

The examples and diagrams in this manual are included solely for illustrative purposes. Because of the many variables and requirements associated with any particular installation, Rockwell Automation, Inc. cannot assume responsibility or liability for actual use based on the examples and diagrams.

No patent liability is assumed by Rockwell Automation, Inc. with respect to use of information, circuits, equipment, or software described in this manual.

Reproduction of the contents of this manual, in whole or in part, without written permission of Rockwell Automation, Inc., is prohibited.

Throughout this manual, when necessary, we use notes to make you aware of safety considerations.

	**WARNING:** Identifies information about practices or circumstances that can cause an explosion in a hazardous environment, which may lead to personal injury or death, property damage, or economic loss.
	**ATTENTION:** Identifies information about practices or circumstances that can lead to personal injury or death, property damage, or economic loss. Attentions help you identify a hazard, avoid a hazard, and recognize the consequence.
IMPORTANT	Identifies information that is critical for successful application and understanding of the product.

Labels may also be on or inside the equipment to provide specific precautions.

	**SHOCK HAZARD:** Labels may be on or inside the equipment, for example, a drive or motor, to alert people that dangerous voltage may be present.
	**BURN HAZARD:** Labels may be on or inside the equipment, for example, a drive or motor, to alert people that surfaces may reach dangerous temperatures.
	**ARC FLASH HAZARD:** Labels may be on or inside the equipment, for example, a motor control center, to alert people to potential Arc Flash. Arc Flash will cause severe injury or death. Wear proper Personal Protective Equipment (PPE). Follow ALL Regulatory requirements for safe work practices and for Personal Protective Equipment (PPE).

Allen-Bradley, Connected Components Workbench, DriveExecutive, DriveExplorer, PowerFlex, RSLogix, SCANport, Studio 5000, Rockwell Software, and Rockwell Automation are trademarks of Rockwell Automation, Inc.

Trademarks not belonging to Rockwell Automation are property of their respective companies.

This manual contains new and updated information.

New and Updated Information

This table contains the changes made to this revision.

Topic	Page
Added information about 270 kW, 400 HP drives to the table of minimum resistances.	214

Notes:

Preface

Overview

Who Should Use This Manual 9
What Is Not in This Manual 9
Additional Resources 9
Allen-Bradley Drives Technical Support 11
Product Certification 11
Manual Conventions 11
General Precautions 12
Studio 5000 Environment 14

Chapter 1

Drive Configuration

Accel/Decel Time 16
Adjustable Voltage 17
Auto Restart 25
Auto/Manual 27
Automatic Device Configuration 34
Autotune 35
Auxiliary Power Supply 41
Bus Regulation 41
Configurable Human Interface Module Removal 52
Droop Feature 53
Duty Rating 53
Feedback Devices. 54
Flying Start 54
Hand-Off-Auto 64
Masks 67
Owners. 70
Power Loss 72
Process PID Loop 76
Reset Parameters to Factory Defaults. 88
Sleep/Wake Mode 90
Start Permissives 94
Stop Modes 96
Voltage Class 104

Chapter 2

Feedback and I/O

Analog Inputs. 105
Analog Outputs 113
Digital Inputs 119
Digital Outputs 130
PTC Motor Thermistor Input 152

Chapter 3

Diagnostics and Protection

Alarms 155
Current Limit 156
DC Bus Voltage/Memory 158
Drive Overload 158
Faults 162
Input Phase Loss Detection 166
Motor Overload 168
Overspeed Limit 172
Password 173
Real Time Clock 174
Reflected Wave 179
Security 185
Shear Pin 188
Slip Compensation 192
Slip Regulator 194

Chapter 4

Motor Control

Carrier (PWM) Frequency 196
Dynamic Braking 197
Flux Braking 216
Flux Regulator 218
Flux Up 218
High Resolution Feedback 220
Inertia Adaption 221
Inertia Compensation 223
Load Observer 225
Motor Control Modes 226
Motor Types 235
Notch Filter 244
Regen Power Limit 247
Speed Reference 251
Speed Regulation 260
Torque Reference 262
Speed Torque Position 266

Chapter 5

Drive Features

Data Logging 277
Energy Savings 282
High Speed Trending 283
Position Homing 292

Chapter 6

Integrated Motion on the EtherNet/IP Network Applications for PowerFlex 755 AC Drives

Additional Resources for Integrated Motion on the EtherNet/IP Network Information 300
Coarse Update Rate 301
Control Modes for PowerFlex 755 Drives Operating on the Integrated Motion on the EtherNet/IP Network 301
Drive Nonvolatile (NV) Memory for Permanent Magnet Motor Configuration 308
Dual Loop Control 309
Dual-Port EtherNet/IP Option Module (ETAP) 315
Hardware Over Travel Considerations 316
Integrated Motion on EtherNet/IP Instance to PowerFlex 755 Drive Parameter Cross-Reference 317
Motor Brake Control 338
Network Topologies 341
PowerFlex 755 and Kinetix 7000 Drive Overload Rating Comparison for Permanent Magnet Motor Operation 345
PowerFlex 755 Drive Option Module Configuration and Restrictions 346
Regenerative/Braking Resistor 347
Safe Speed Monitor Option Module (20-750-S1) Configuration 350
Speed Limited Adjustable Torque (SLAT) 353
Supported Motors 357
System Tuning 363
Using an Incremental Encoder with an MP*x* Motor 372
PowerFlex 755 Integrated Motion on the EtherNet/IP Network Block Diagrams 375

Notes:

Overview

The purpose of this manual is to provide detailed information including operation, parameter descriptions, and programming.

Who Should Use This Manual

This manual is intended for qualified personnel. You must be able to program and operate Adjustable Frequency AC Drive devices. In addition, you must have an understanding of the parameter settings and functions.

What Is Not in This Manual

The purpose of this manual is to provide detailed drive information including operation, parameter descriptions and programming.

Additional Resources

The following table lists publications that provide information about PowerFlex 750-Series drives.

Resource	Description
PowerFlex 750-Series Drive Installation Instruction, 750-IN001	Provides the basic steps required to install a PowerFlex® 750-Series AC drive.
PowerFlex 750-Series AC Drives Programming Manual, publication 750-PM001	Provides detailed information on: • I/O, control, and feedback options • Parameters and programming • Faults, alarms, and troubleshooting
PowerFlex 750-Series AC Drives Technical Data, publication 750-TD001	Provides detailed information on: • Drive specifications • Option specifications • Fuse and circuit breaker ratings
PowerFlex 20-HIM-A6 / -C6S HIM (Human Interface Module) User Manual, publication 20HIM-UM001	Provides detailed information on HIM components, operation, features.
PowerFlex 750-Series AC Drives Hardware Service Manual - Frame 8 and Larger, publication 750-TG001	Provides detailed information on: • Preventive maintenance • Component testing • Hardware replacement procedures
PowerFlex 755 Drive Embedded EtherNet/IP Adapter User Manual, publication 750COM-UM001	These publications provide detailed information on configuring, using, and troubleshooting PowerFlex 750-Series communication option modules and adapters.
PowerFlex 750-Series Drive DeviceNet Option Module User Manual, publication 750COM-UM002	
PowerFlex 7-Class Network Communication Adapter User Manuals, publications 750COM-UMxxx	

Resource	Description
PowerFlex 750-Series Safe Torque Off User Manual, publication 750-UM002	These publications provide detailed information on installation, set up, and operation of the 750-Series safety option modules.
Safe Speed Monitor Option Module for PowerFlex 750-Series AC Drives Safety Reference Manual, publication 750-RM001	
Wiring and Grounding Guidelines for Pulse Width Modulated (PWM) AC Drives, publication DRIVES-IN001	Provides basic information needed to properly wire and ground PWM AC drives.
PowerFlex AC Drives in Common Bus Configurations, publication DRIVES-AT002	Provides basic information needed to properly wire and ground common bus PWM AC drives.
Safety Guidelines for the Application, Installation and Maintenance of Solid State Control, publication SGI-1.1	Provides general guidelines for the application, installation, and maintenance of solid-state control.
A Global Reference Guide for Reading Schematic Diagrams, publication 100-2.10	Provides a simple cross-reference of common schematic/ wiring diagram symbols used throughout various parts of the world.
Guarding Against Electrostatic Damage, publication 8000-4.5.2	Provides practices for guarding against Electrostatic damage (ESD)
Product Certifications website, http://ab.com	Provides declarations of conformity, certificates, and other certification details.

The following publications provide necessary information when applying the Logix Processors.

Resource	Description
Logix5000 Controllers Common Procedures, publication 1756-PM001	This publication links to a collection of programming manuals that describe how you can use procedures that are common to all Logix5000 controller projects.
Logix5000 Controllers General Instructions, publication 1756-RM003	Provides a programmer with details about each available instruction for a Logix-based controller.
Logix5000 Controllers Process Control and Drives Instructions, publication 1756-RM006	Provides a programmer with details about each available instruction for a Logix-based controller.

The following publications provide information that is useful when planning and installing communication networks.

Resource	Description
ControlNet Coax Tap Installation Instructions, publication 1786-5.7	Provides procedures and specifications for the installation of ControlNet coaxial taps.
ControlNet Fiber Media Planning and Installation Guide, publication CNET-IN001	Provides basic information for fiber cable planning and installation.

You can view or download publications at http://www.rockwellautomation.com/literature. To order paper copies of technical documentation, contact your local Allen-Bradley distributor or Rockwell Automation sales representative.

Allen-Bradley Drives Technical Support

Use one of the following methods to contact Automation and Control Technical Support.

Online	Email	Telephone
www.ab.com/support/abdrives	support@drives.ra.rockwell.com	262-512-8176

Title	Online
Rockwell Automation Technical Support	http://support.rockwellautomation.com/knowledgebase

Product Certification

Product Certifications and Declarations of Conformity are available on the internet at www.rockwellautomation.com/products/certification.

Manual Conventions

- In this manual we refer to PowerFlex 750-Series Adjustable Frequency AC Drives as: drive, PowerFlex 750, PowerFlex 750 drive or PowerFlex 750 AC drive.
- Specific drives within the PowerFlex 750-Series can be referred to as:
  - PowerFlex 753, PowerFlex 753 drive or PowerFlex 753 AC drive
  - PowerFlex 755, PowerFlex 755 drive or PowerFlex 755 AC drive
- To help differentiate parameter names and LCD display text from other text, the following conventions are used:
  - Parameter Names appear in [brackets] after the Parameter Number. For example: P308 [Direction Mode].
  - Display text appears in “quotes.” For example: “Enabled.”
- The following words are used throughout the manual to describe an action.

Word	Meaning
Can	Possible, able to do something
Cannot	Not possible, not able to do something
May	Permitted, allowed
Must	Unavoidable, you must do this
Shall	Required and necessary
Should	Recommended
Should Not	Not recommended

General Precautions

Qualified Personnel



ATTENTION: Only qualified personnel familiar with adjustable frequency AC drives and associated machinery should plan or implement the installation, start-up and subsequent maintenance of the system. Failure to comply may result in personal injury and/or equipment damage.

Personal Safety



ATTENTION: To avoid an electric shock hazard, verify that the voltage on the bus capacitors has discharged completely before servicing. Check the DC bus voltage at the Power Terminal Block by measuring between the +DC and -DC terminals, between the +DC terminal and the chassis, and between the -DC terminal and the chassis. The voltage must be zero for all three measurements.

Hazard of personal injury or equipment damage exists when using bipolar input sources. Noise and drift in sensitive input circuits can cause unpredictable changes in motor speed and direction. Use speed command parameters to help reduce input source sensitivity.

Risk of injury or equipment damage exists. DPI or SCANport™ host products must not be directly connected together via 1202 cables. Unpredictable behavior can result if two or more devices are connected in this manner.

The drive start/stop/enable control circuitry includes solid state components. If hazards due to accidental contact with moving machinery or unintentional flow of liquid, gas or solids exists, an additional hardwired stop circuit may be required to remove the AC line to the drive. An auxiliary braking method may be required.

Hazard of personal injury or equipment damage due to unexpected machine operation exists if the drive is configured to automatically issue a Start or Run command. Do not use these functions without considering applicable local, national and international codes, standards, regulations or industry guidelines.

Product Safety



ATTENTION: An incorrectly applied or installed drive can result in component damage or a reduction in product life. Wiring or application errors such as under sizing the motor, incorrect or inadequate AC supply, or excessive surrounding air temperatures may result in malfunction of the system.

This drive contains ESD (Electrostatic Discharge) sensitive parts and assemblies. Static control precautions are required when installing, testing, servicing or repairing this assembly. Component damage may result if ESD control procedures are not followed. If you are not familiar with static control procedures, reference Guarding Against Electrostatic Damage, publication 8000-4.5.2, or any other applicable ESD protection handbook.

Configuring an analog input for 0-20 mA operation and driving it from a voltage source could cause component damage. Verify proper configuration prior to applying input signals.

A contactor or other device that routinely disconnects and reapplies the AC line to the drive to start and stop the motor can cause drive hardware damage. The drive is designed to use control input signals to start and stop the motor. If an input device is used, operation must not exceed one cycle per minute or drive damage will occur.

Drive must not be installed in an area where the ambient atmosphere contains volatile or corrosive gas, vapors or dust. If the drive is not going to be installed for a period of time, it must be stored in an area where it will not be exposed to a corrosive atmosphere.

Class 1 LED Product



ATTENTION: Hazard of permanent eye damage exists when using optical transmission equipment. This product emits intense light and invisible radiation. Do not look into module ports or fiber optic cable connectors.

Studio 5000 Environment

The Studio 5000™ Engineering and Design Environment combines engineering and design elements into a common environment. The first element in the Studio 5000 environment is the Logix Designer application. The Logix Designer application is the rebranding of RSLogix™ 5000 software and will continue to be the product to program Logix5000™ controllers for discrete, process, batch, motion, safety, and drive-based solutions.



The Studio 5000 environment is the foundation for the future of Rockwell Automation® engineering design tools and capabilities. This environment is the one place for design engineers to develop all of the elements of their control system.

Drive Configuration

Topic	Page
Accel/Decel Time	16
Adjustable Voltage	17
Auto Restart	25
Auto/Manual	27
Automatic Device Configuration	34
Autotune	35
Auxiliary Power Supply	41
Bus Regulation	41
Configurable Human Interface Module Removal	52
Droop Feature	53
Duty Rating	53
Feedback Devices	54
Flying Start	54
Hand-Off-Auto	64
Masks	67
Owners	70
Power Loss	72
Process PID Loop	76
Reset Parameters to Factory Defaults	88
Sleep/Wake Mode	90
Start Permissives	94
Stop Modes	96
Voltage Class	104

Accel/Decel Time

You can configure the drive's acceleration time and deceleration time.

Acceleration Time

P535[Accel Time 1] and P536 [Accel Time 2] set the acceleration rate for all speed changes. Defined as the time to accelerate from 0 to motor nameplate frequency P27 [Motor NP Hertz] or to motor nameplate rated speed P28 [Motor NP RPM]. The setting of Hertz or RPM is programmed in P300 [Speed Units]. Selection between Acceleration Time 1 and Acceleration Time 2 is controlled by a digital input function (see Digin Functions in the PowerFlex 750-Series Programming Manual, publication 750-PM001) or by Logic Command (sent over a communication network or DeviceLogix™ software).

Adjustment range is 0.00 to 3600.00 seconds.

Deceleration Time

P537 [Decel Time 1] and P538 [Decel Time 2] set the deceleration rate for all speed changes. Defined as the time to decelerate from motor nameplate frequency P27 [Motor NP Hertz] or from motor nameplate rated speed P28 [Motor NP RPM] to 0. The setting of Hertz or RPM is programmed in P300 [Speed Units]. Selection between Deceleration Time 1 and Deceleration Time 2 is controlled by a digital input function (see Digin Functions in the PowerFlex 750-Series Programming Manual, publication 750-PM001) or by Logic Command (sent over a communication network or DeviceLogix software).

Adjustment range is 0.00 to 3600.00 seconds.

Adjustable Voltage

As standard AC drive applications are expanding into new markets, new control methods are required to meet these market demands for electromagnetic applications. Some of these applications, listed below, use non-motor or non-standard motors that require independent control of load frequency and voltage.

- Vibration welding
- Induction heating
- Power supplies
- Vibratory feeders or conveyors
- Electromagnetic stirring
- Resistive loads

Standard inverter control modes consist of volts per hertz (V/Hz), with boost selections, speed feedback selection, fan, pump, and economize, flux vector (FV), with encoder and encoder less modes. The control of the output voltage/frequency relationship of the variable frequency inverter must be maintained in the linear and nonlinear (over-modulation) regions. Voltage linearity is achieved by maintaining a constant voltage/frequency ratio over the entire operating region. The variable frequency inverter must deliver an adjustable-frequency alternating voltage whose magnitude is related to the output frequency. As the linear-to-nonlinear transition begins, the control must compensate for the lost voltage and deliver a linear output voltage profile.

In adjustable voltage control mode, the output voltage is controlled independently from the output frequency. The voltage and frequency components have independent references and acceleration/deceleration rates.

The adjustable voltage control mode operation enables separate control of the output voltage and the output frequency for use on applications that are typically non-motor types. The voltage and frequency components have independent references and independent acceleration and deceleration rates. Both the voltage and frequency can be set to any point within their respective range. The following graph illustrates these functional ranges.

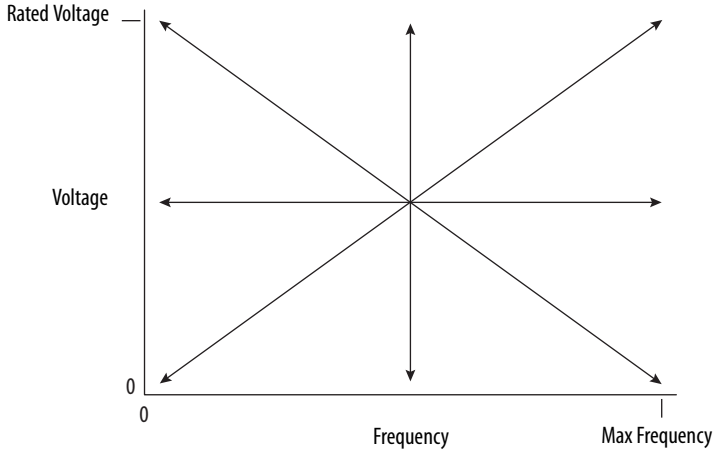

Overview

Adjustable voltage control is enabled by setting P35 [Motor Ctrl Mode] to option 9 "Adj VltgMode." This feature provides either three-phase and single-phase output voltage. The default mode is three-phase output voltage and is selected by P1131 [Adj Vltg Config]. In single-phase mode the drive is not designed to operate single phase motors, but rather the output load is considered to have a lagging or unity power factor consisting of resistance and inductance for specially designed motor or non-motor application.

Input reference sources can be configured from P1133 [Adj Vltg Select]. The input source can be scaled and upper when lower limits are applied. A trim source can be selected reference from P1136 [Adj Vltg TrimSel] with the trim voltage added or subtracted from the voltage reference.

The scalar frequency selection and scalar frequency ramp are the same components as used in all other control modes. The exception being the frequency command and ramp are decoupled from the voltage generation for the adjustable voltage control mode to provide an independent frequency ramp. Acceleration and deceleration rates and S Curve are the same as used in all other modes. Upper and lower limits are applied to the value of the output command frequency.

The adjustable voltage control voltage ramp provides an independent voltage ramp decoupled from the scalar frequency ramp and controlled by user selectable acceleration and deceleration ramp times. There is also an adjustable percent S Curve feature.

The current limit function reduces the output voltage when the current limit is exceeded. Minimum and maximum voltage limits are applied so the output voltage is never operated outside that range.

Adjustable Voltage Control Setup

The following examples of setups for the Adjustable Voltage Control mode are a starting point for configuration. Applications can be unique and require specific parameter settings. These examples are base case only.

Table 1 - Basic Adjustable Voltage Control Parameters

Parameter No.	Parameter Name	Setting	Description
35	Motor Ctrl Mode	9 "Adj VltgMode"	Adjustable Voltage feature is used in non-motor applications.
1131	Adj Vltg Config	1	1 = 3-Phase Operation, 0 = 1-Phase Operation
1133	Adj Vltg Select	Preset 1	
1134	Adj Vltg Ref Hi	100	Percent
1140	Adj Vltg AccTime	*n* Secs	Application dependent

Parameter No.	Parameter Name	Setting	Description
1141	Adj Vltg DecTime	*n* Secs	Application dependent
1142	Adj Vltg Preset1	*n* VAC	Application dependent
1153	Dead Time Comp	*n* %	Vary from 0% to 100%. Dead Time Comp is best set to 0% when output of the Sine wave Filter is fed into a transformer, to prevent or minimize DC Offset voltages.

Refer to the PowerFlex 750-Series Programming Manual, publication 750-PM001, for parameter descriptions and defaults.

When using sine wave or dv/dt filters, the PWM frequency must match the filter design. The drive's thermal protection changes the PWM frequency if over temperature conditions are detected. Set P420 [Drive OL Mode] to option 1 "Reduce CLmt" and P38 [PWM Frequency] to the filter instructions.

Additional Parameter Changes

When using adjustable voltage control it is necessary to change additional parameters beyond the feature itself. Use this table to assist in setting these parameters.

Table 2 - Adjustable Voltage Applications Parameter Settings

Parameter No.	Parameter Name	Setting	Description
38	PWM Frequency	2 kHz or 4 kHz	Match the setting with filter tuning.
40	Mtr Options Cfg	Bit 5 = 0	Reflected wave is turned off so that there are no missing pulses in the output voltage waveform and to minimize any offsets that can appear.
		Bit 8 = 1	AsyncPWMLock is on because the filter is tuned to the carrier frequency. The carrier frequency must be fixed, if it changes the filter will not work. Also, set the PWM frequency match filter tuning, either 2 kHz or 4 kHz.
		Bit 9 = 1	PWM Freq Lock is on because the filter is tuned to the carrier frequency. The carrier frequency must be fixed, if it changes the filter will not work. Also, set the PWM frequency match filter tuning, either 2 kHz or 4 kHz.
		Bit 11 = 0	The "Elect Stab" bit affects angle stability and voltage stability. Angle stability gain is set for 0 so it does not compensate for the current going into the filter's caps. Voltage stability gain is set for 0 for the same reason.
		Bit 12 = 0	Transistor diagnostics is turned off because that sequence of turning transistors on and off charges the caps in the filter and can cause an IOC trip.
43	Flux Up Enable	0	Leave at the "Manual" setting.
44	Flux Up Time	Default	Leave at 0.0000 seconds.

Parameter No.	Parameter Name	Setting	Description
60	Start Acc Boost	0	Set if there are DC offset voltages at load transformer input windings.
61	Run Boost	0	
62	Break Voltage	0	
63	Break Frequency	0	
420	Drive OL Mode	1 "Reduce CLmt"	Drive OL mode is set for reduce current limit, and not the PWM frequency as it must remain fixed.
1154	DC Offset Ctrl	1 "Enable"	This turns off any offset control programmed in the firmware.

Modulation mode is default at space vector only because 2-phase modulation will degrade the filter's performance.

IMPORTANT Do not autotune.

Application Considerations

Whatever the device the user wants to connect to the drive by using the adjustable voltage feature, that device has some type of rating associated with it. As a minimum it needs to have a current rating and voltage rating. Drive selection is based on those ratings.

Sizing

First, consider the voltage rating of the drive. Determine what the available line voltage is and select a drive voltage rating to match. Next, select a drive that supplies the current necessary for the device's rating.

Single Phase Output

Consult Rockwell Automation before configuring a drive for single phase adjustable voltage output. Derating of the drive is necessary because of stress on the DC bus capacitor or the IGBT switching losses. When PWM is applied to a resistor, the current changes state following the voltage. For each PWM voltage pulse the current is pulsing the same way. This rapid change in current is not designed into the IGBT selection for the drive. Therefore, some sort of derating needs to be applied. Somewhere around 67% derating. When in this mode, actual losses must be measured to determine a derating percentage. Adding a reactor in series with the resistor can help by adding inductance and rounding off the corners of the current pulses. Depending on how much inductance is added, the waveform can look like a sine wave.

This is a plot showing output voltage, output current, and DC Bus voltage. Here you can see the current following the voltage in a typical PWM output.

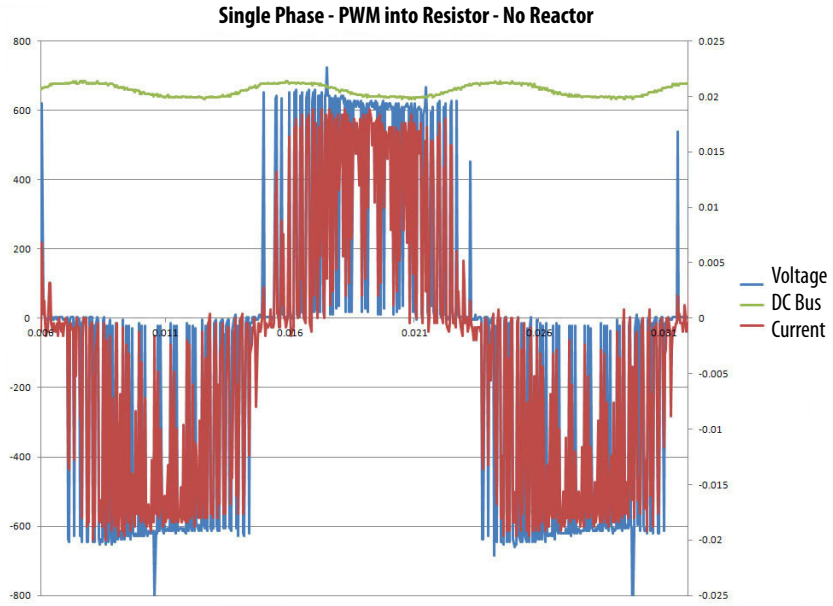

This plot enlarges some of the pulses to see the current and its shape.

Notice the tops have an abrupt change to them. Any rounding of the wave form at the top is due to the type of resistor used. The resistors used for this plot are the grid type resistors where the resistor element is coiled along its length, adding a certain amount of inductance. This inductance helps round over the leading edge of the current.

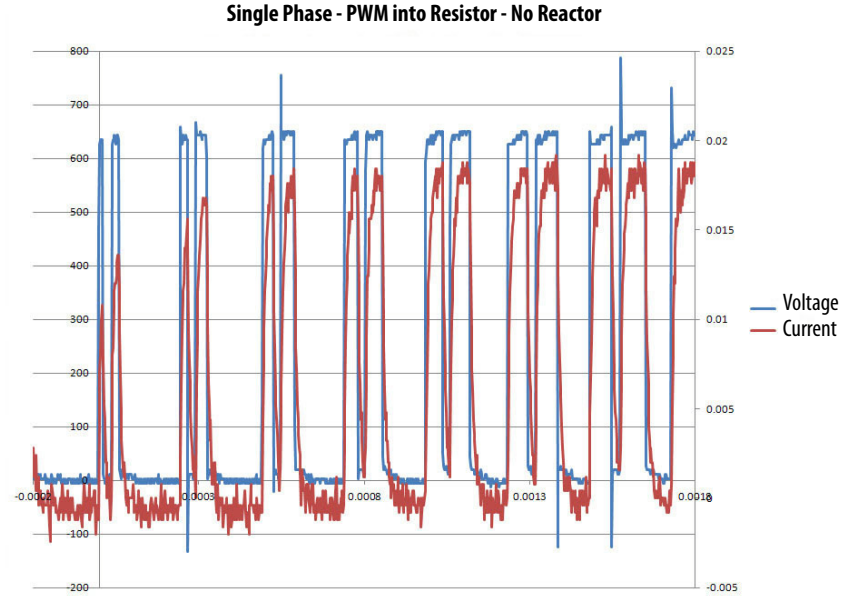

Below is the same plot with a reactor added in series. These waveform look like a sine wave and that is a function of how much inductance is added. However, the increased voltage drop must be accounted for.

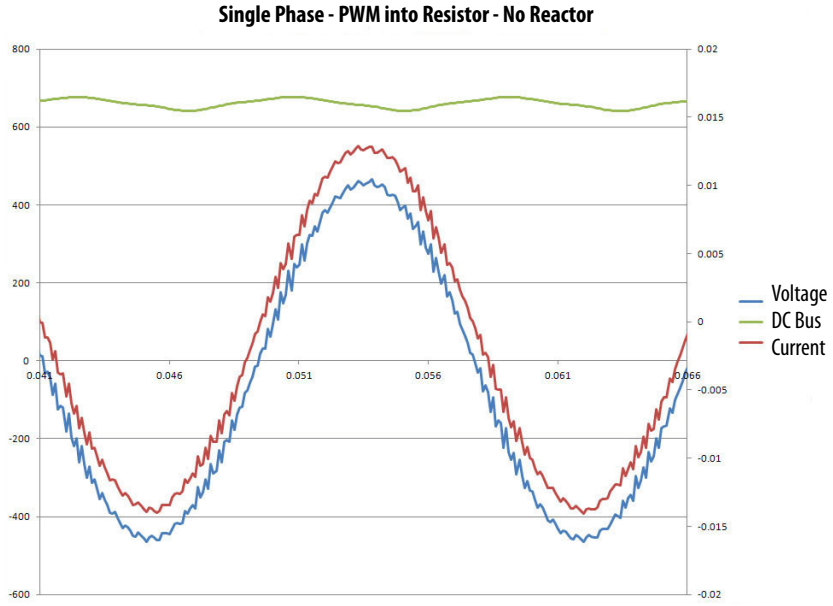

Another option is to have a sine wave filter in the circuit. This lets unshielded cable to be used without the worry of PWM generated noise being injected into the facility. The cost of shielded cable versus a sine wave filter, Among other factors, has to be weighed.

When using single phase operation, connect the load to the U and V phases. The W phase is energized but is not used.

Enter your maximum current into the Motor NP Amps parameter. Also use this value in the Current Limit parameter. When started the drive attempts to ramp to the commanded voltage. If current limit is hit, the drive levels off or reduce the voltage to satisfy the current limit.

Notice the DC Bus voltage ripple in two of the plots above. If this ripple is high enough in magnitude, it can cause the drive to trip on an Input Phase Loss fault. This is due to the drive monitoring the bus ripple and if a certain delta between max volts and min volts exists for a certain amount of time, the drive assumes an input phase was lost. This fault can be disabled by setting P462 [InPhase LossActn] to option 0 “Ignore.”

Three Phase Output

If you are driving as resistive load, configure it in a three phase arrangement to avoid using the single phase mode of adjustable voltage. Use a sine wave filter to keep PWM off the resistors. If the resistors are of the ceramic type, it is possible to crack the resistor using PWM.

The following is a plot of voltage and current at the reactor. The output of the drive is sent through a sine wave filter then to the reactor. The shape of the waveform is determined by the amount of capacitance in the sine wave filter.

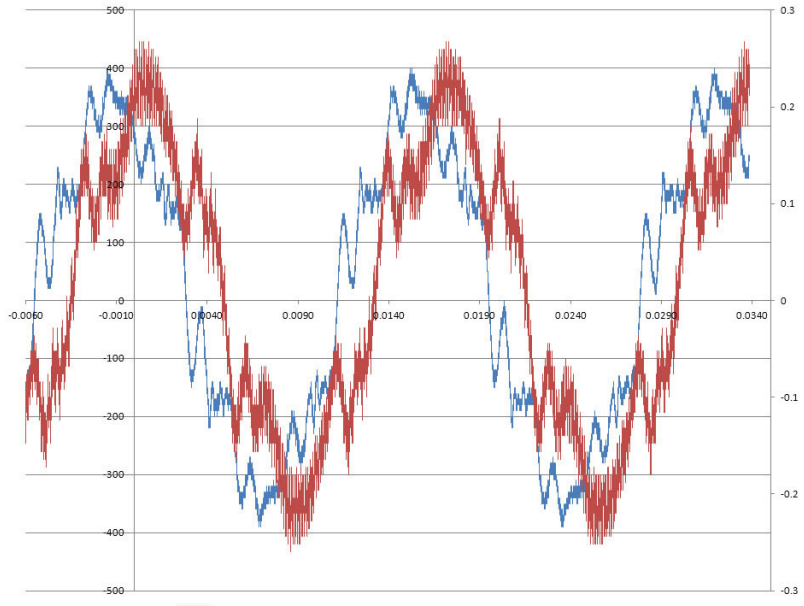

If you wanted to know what voltage you can expect at the three phase reactor, consider an example where the user has four reactors in series. The inductance of each is 1.2mH, 5mH, 5mH and 3mH. First item to calculate is XL for each reactor. .$XL = 2 \times pi \times f \times H$

$$XL1 = 2 \times pi \times 60 \times (1.2/1000) = 0.45ohm$$

$$XL2 = 2 \times pi \times 60 \times (5/1000) = 1.88ohm$$

$$XL3 = 2 \times pi \times 60 \times (5/1000) = 1.88ohm$$

$$XL4 = 2 \times pi \times 60 \times (3/1000) = 1.13ohm$$

Now total it. XL1 + XL2 + XL3 + XL4 = 5.35 ohm.

For a three phase reactor the current is represented by the equation,$I = V/(XL \times \sqrt{3})$

Isolate the voltage. $V = I \times XL \times \sqrt{3}$

The current value can be what the least rating of the reactors are or if the rating are greater than the drive rating, use the drive rating. In this case the drive is rated for 14 amps.

So plug in the numbers. $V = 14 \times 5.35 \times 1.73 = 129.8$

So 14 amps is realized when the voltage is 129.8 on the output. A drive with a voltage rating of 240V AC could be selected.

Below is a waveform of voltage and current at a resistor. The output of the drive runs through a sine wave filter. Then this is connected to a one to one transformer. This output is then sent to a bridge rectifier giving us pure DC. With the use of a feedback board and the drives PI loop, the voltage at the resistor was steady even if the resistance changed while running.

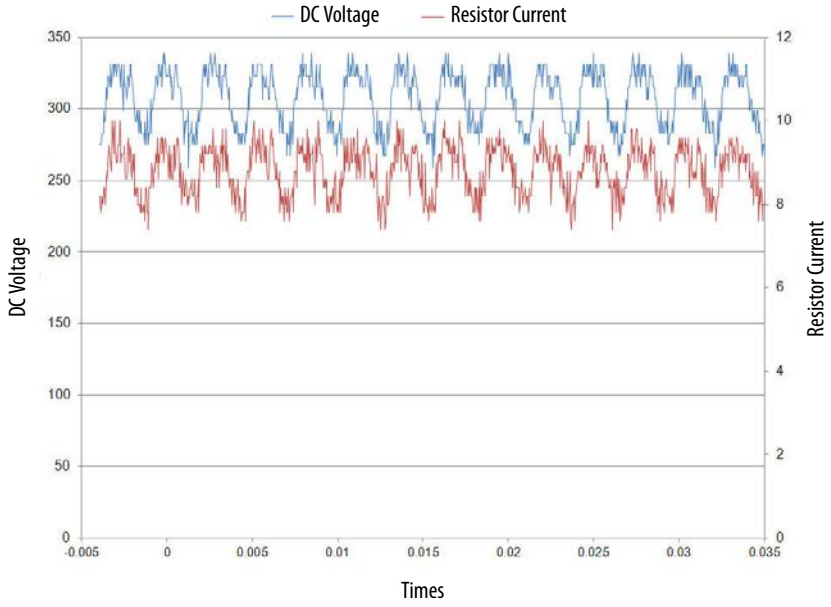

Other

Setting the frequency acceleration time to zero results in the drive outputting a DC voltage waveform.

If the frequency accel time is set between 0 and 1, this could trigger and anomaly where the drive outputs a frequency not equal to the commanded frequency. The

cause of this anomaly is the introduction of the jerk function. This bit needs to be off during this condition.

MOTOR CONTROL — Mtr Ctrl Options

40 **Mtr Options Cfg** — RW — 32-bit Integer

Motor Options Configuration

Configuration of motor control-related functions. For motors above 200 Hz, a carrier frequency of 8 kHz or higher is recommended. Consider drive derate and motor lead distance restrictions.

Options	Reserved	Reserved	Reserved	Reserved	Reserved	Reserved	Reserved	Reserved	Reserved	Reserved	Reserved	Reserved	Reserved	Reserved	Reserved	Reserved	Jerk Select	Not Used	Common Mode	Xsistor Diag	Elect Stab	DB WhileStop	PWM FreqLock	AsyncPWMLock	PWM Type Sel	RS Adaption	Reflect Wave	Mtr Lead Rev	EnclsTrqProv (1)	Trq ModeJog	Trq ModeStop	Zero TrqStop
Default	0	0	0	0	0	0	0	0	0	0	0	0	0	0	0	0	0	0	0	1	1	0	0	0	1	1	1	0	0	1	1	1
Bit	32	30	29	28	27	26	25	24	23	22	21	20	19	18	17	16	15	14	13	12	11	10	9	8	7	6	5	4	3	2	1	0

(1) 755 drives only.

When using single phase operation, connect the load to the U and V phases. The W phase is energized but is not used.

Using a DC output can result in thermal issues. The drive may need to be derated.

Investigate Possible Derating

Derate drive for sine wave filter.

Motor or drive overload is not affected by adjustable voltage mode.

Auto Restart

The Auto Restart feature provides the ability for the drive to automatically perform a fault reset followed by a start attempt without user or application intervention. Provided the drive has been programmed with a 2 wire control scheme and the Run signal is maintained. This enables remote or unattended operation. Only certain faults are allowed to be reset. Faults listed as Non-Resettable in the programming manual indicate possible drive component malfunction and are not resettable.

Use caution when enabling this feature, because the drive attempts to issue its own start command based on user selected programming.

Configuration

Setting P348 [Auto Rstrt Tries] to a value greater than zero enables the Auto Restart feature. Setting the number of tries equal to zero disables the feature.

ATTENTION: Equipment damage and/or personal injury may result if this parameter is used in an inappropriate application. Do not use this function without considering applicable local, national and international codes, standards, regulations or industry guidelines.

P349 [Auto Rstrt Delay] sets the time, in seconds, between each reset/run attempt.

The auto reset/run feature supports the following status information.

- P936 [Drive Status 2] Bit 1 "AuRstrCntDwn" provides indication that an Auto Restart attempt is presently counting down and the drive attempts to start at the end of the timing event.
- P936 [Drive Status 2] Bit 0 "AutoRstr Act" indicates that the auto restart has been activated.

Operation

The typical steps performed in an Auto Reset/Run cycle are as follows.

1. The drive is running and an Auto Reset Run fault occurs, thus initiating the fault action of the drive.
2. After the number of seconds in P349 [Auto Rstrt Delay], the drive automatically performs an internal Fault Reset, resetting the faulted condition.
3. The drive then issues an internal Start command to start the drive.
4. If another Auto Reset Run fault occurs, the cycle repeats itself up to the number of attempts set in P348 [Auto Rstrt Tries].
5. If the drive faults repeatedly for more than the number of attempts set in P348 [Auto Rstrt Tries] with less than five minutes between each fault, the Auto Reset/Run is considered unsuccessful and the drive remains in the faulted state.
6. If the drive remains running for five minutes or more because the last reset/run without a fault, or is otherwise stopped or reset, the Auto Reset/Run is considered successful. The Auto Restart status parameters are reset, and the process repeats if another auto resettable fault occurs.

   See Aborting an Auto-Reset/Run Cycle for information on how the Reset/Run cycle can be aborted.

Beginning an Auto-Reset/Run Cycle

The following conditions must be met when a fault occurs for the drive to begin an Auto Reset/Run cycle:

- The fault type must be Auto Reset Run.
- P348 [Auto Rstrt Tries] setting must be greater than zero.
- The drive must have been running, not jogging, not auto tuning, and not stopping, when the fault occurred. (A DC Brake state is part of a stop sequence and therefore is considered stopping.)

Aborting an Auto-Reset/Run Cycle

During an Auto Reset/Run cycle the following actions/conditions abort the reset/run attempt process.

- A stop command is issued from any source. (Removal of a 2-wire run-fwd or run-rev command is considered a stop assertion.)
- A fault reset command is issued from any source.
- The enable input signal is removed.
- P348 [Auto Rstrt Tries] is set to zero.
- A Non-Resettable fault occurs.
- Power to the drive is removed.
- The Auto Reset/Run Cycle is exhausted.

After all [Auto Rstrt Tries] have been made and the drive has not successfully restarted and remained running for five minutes or more, the Auto Reset/Run cycle is considered exhausted and therefore unsuccessful. In this case the Auto Reset/Run cycle terminates and an F33 "AuRsts Exhaust" fault is indicated by P953 [Fault Status B] Bit 13 "AuRstExhaust."

Auto/Manual

The purpose of the Auto/Manual function is to permit temporary override of speed control and/or exclusive ownership of logic (start, run, direction) control. A manual request can come from any port, including HIM, digital input or other input module. However, only one port can own manual control and must release the drive back to auto control before another port can be granted manual control. When in Manual mode, the drive receives its speed reference from the port that requested manual control, unless otherwise directed by the Alternate Manual Reference Select.

The HIM can request Manual control by pressing the Controls key followed by the Manual key. Manual control is released by pressing the Controls key followed by Auto. When the HIM is granted manual control, the drive uses the speed reference in the HIM. If desired, the auto speed reference can be automatically preloaded into the HIM when entering HIM manual control, so that the transition is smooth.

Manual control can also be requested through a digital input. To do this, a digital input has to be set to request Manual control through P172 [DI Manual Ctrl]. Digital Input Manual control requests can be configured to use their own alternative speed reference to control the drive. Digital inputs can also be used in conjunction with Hand-Off-Auto Start to create a three way HOA switch that incorporates Manual mode.

The Safe Speed Monitor Option Module uses Manual mode to control the speed of the drive when entering Safe Limited Speed monitoring.

Auto/Manual Masks

The port configuration of the Auto/Manual feature is performed through a set of masks. Together, these masks set which ports can control the speed and/or logic control of the drive as well as which ports can request Manual control. The masks are configured by setting a 1 or 0 in the bit number that corresponds to the port (Bit 1 for port 1, Bit 2 for port 2, and so forth). Digital Inputs are always configured through Bit 0, regardless of what port the module physically resides in. If both [Manual Ref Mask] and [Manual Cmd Mask] for a particular port are set to 0, that port is unable to request manual control.

P324 [Logic Mask]
Logic Mask enables and disables the ports from issuing logic commands (such as start and direction) in any mode. Stop commands from any port are not masked and still stop the drive.

P325 [Auto Mask]
Auto Mask enables and disables the ports from issuing logic commands (such as start and direction) while in Auto mode. Stop commands from any port are not masked and still stop the drive.

P326 [Manual Cmd Mask]
Manual Command Mask enables and disables the ports from exclusively controlling logic commands (such as start and direction) while in Manual mode. If a port assumes Manual control, and the corresponding bit for the port in the [Manual Cmd Mask] is set, no other port is able to issue logic commands. Stop commands from any port are not masked and still stops the drive.

P327 [Manual Ref Mask]
Manual Reference Mask enables and disables the ports from controlling the speed reference while in Manual mode. If a port assumes manual control, and the corresponding bit for the port in the [Manual Ref Mask] is set, the drive is commanded to the speed reference from that port. An alternate speed reference can be commanded using P328 [Alt Man Ref Sel]. If the respective bit for the manual control port is not set, then the drive follows its normal automatic speed reference, even in Manual mode.

Alternate Manual Reference Select

By default, the speed reference used in Manual mode comes from the port that requested manual control (For example, if a HIM in port 1 requests manual control, the speed reference in Manual mode comes from port 1). If instead it is desired to use an a different speed reference, P328 [Alt Man Ref Sel], can be used. The port selected in the parameter is used for manual reference regardless of which port requested manual control, as long as the port in manual control is allowed to set the manual reference per P327 [Manual Ref Mask]. If P328 [Alt Man Ref Sel] is an analog input, the maximum and minimum speeds can be configured through P329 [Alt Man Ref AnHi] and P330 [Alt Man Ref AnLo].

For analog input between the minimum and maximum, the drive derives the speed from these parameters through linear interpolation.

The P328 [Alt Man Ref Sel] manual reference overrides all other manual speed references, including P563 [DI ManRef Sel].

HIM Control

Manual Control can be requested through an HIM device attached to port 1, 2, or 3. The proper bits must be set in the masks (P324 [Logic Mask], P326 [Manual Cmd Mask], and P327 [Manual Ref Mask]) for the port that the HIM is attached. To request control through the HIM, press the (Controls) key to display the Control screen.

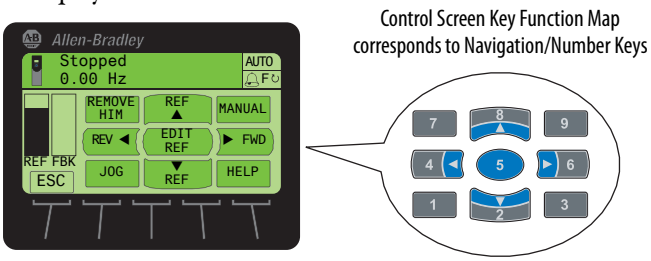

Press the 9 (Manual) key.

Press the 5 (Edit) key to confirm that you want to switch to Manual mode.

If the request is accepted, the HIM displays “MAN” in the top right corner. The display does not indicate if the drive is in Manual, but rather if that particular HIM has Manual control. A HIM still displays “AUTO” if it does not have ownership of the Manual mode, even if the drive itself is in Manual mode. To see if the drive is in Manual mode, check P935 [Drive Status 1] Bit 9.



When a HIM has Manual control of the drive, the drive uses the speed reference from the HIM unless overridden by P328 [Alt Man Ref Sel]. To change the speed reference on the HIM, navigate to the Status screen and press the middle soft key labeled REF.

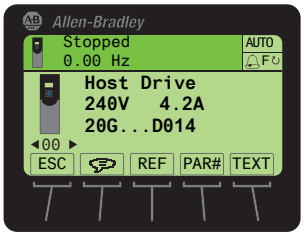

If the request is not accepted, a message indicates that "Manual Control is not permitted at this time." The most likely causes are that manual control is disabled for the port or that another port currently has manual control. To check which port has manual control, look at P924 [Manual Owner].

To release Manual mode from the HIM, press the (Controls) key to display the Control screen.

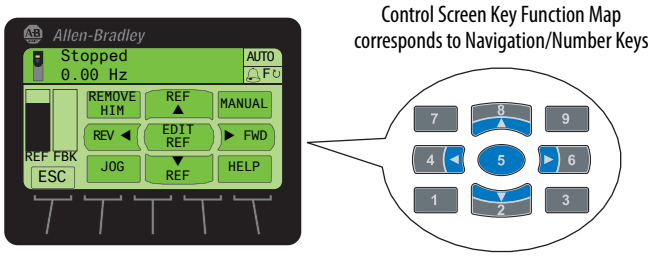

Press the 9 (Auto) key.

Press the 5 (Edit) key to confirm that you want to switch to Auto mode.

HIM Preload

Before taking a manual control speed reference from a HIM, the drive can preload its current speed into the HIM to provide a smooth transition. Without this feature, the drive immediately transitions to whatever speed was last used in the HIM, before the operator has a chance to make their adjustment. With this feature, the drive maintains its current speed until the operator sets the speed to the desired manual reference.

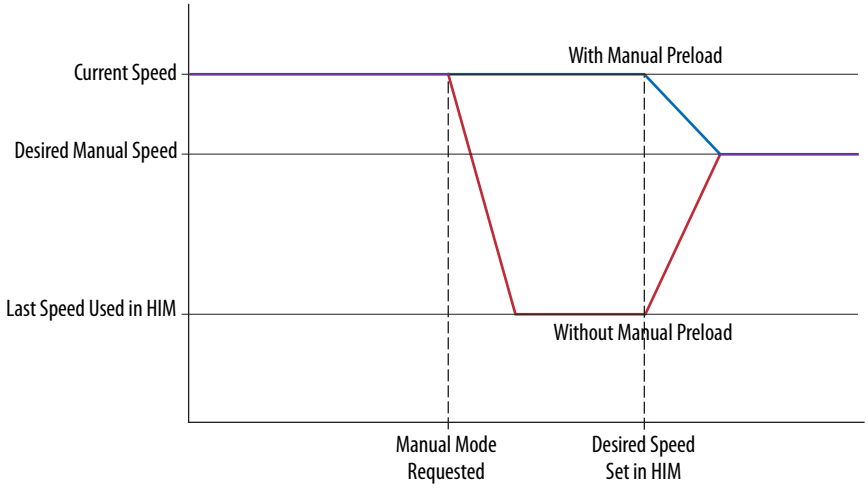

The Auto/Manual HIM Preload is configured through P331 [Manual Preload]. Ports 1, 2, and 3 can be configured to have the speed reference preloaded into the HIM by setting bits 1, 2, and 3 respectively.

Example Scenario

The drive has a HIM in port 1 and a 24V DC I/O module in port 5. You want to select manual control from a digital input 3 on the I/O module. You want the embedded EtherNet/IP port to be the source for the speed reference in Automatic mode, and the HIM to be the source for the speed reference in Manual mode.

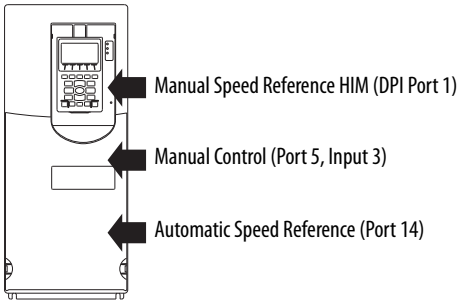

Required Steps

1. Set P172 [DI Manual Ctrl] to Port 5-I/O Module > 1-Dig In Sts > 3 – Input 3.
2. Set P328 [Alt Man Ref Sel] = 871 Port 1 Reference 3. Set P331 [Manual Preload] = 0000 0000 0000 0010, Bit 1 enables the preloading of the speed feedback value to the HIM at port 1 when the HIM is granted manual control.

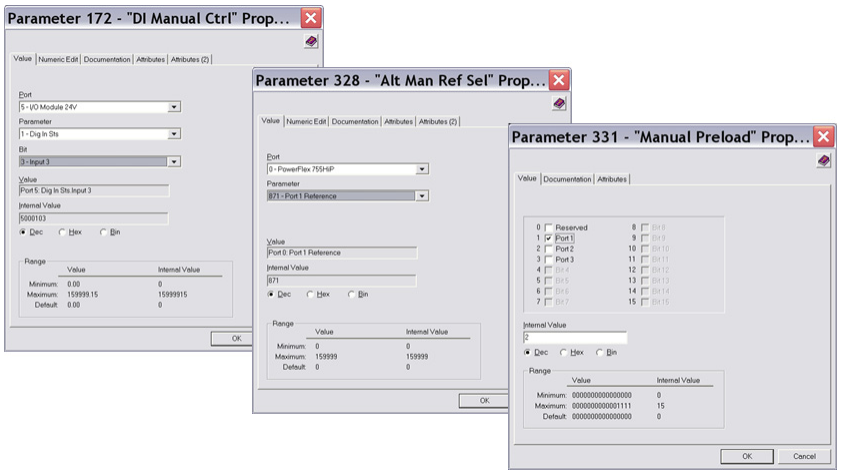

Digital Input Control

A Digital Input can be configured to request manual control through P172 [DI Manual Ctrl]. When setting up the Auto/Manual masks, digital inputs are configured through Bit 0, regardless of what port the module physically resides in.

A speed reference for Manual mode from a digital input can be set by selecting a port in P328 [Alt Man Ref Sel]. This however causes all manual requests to use that port as a reference, whether the request was from the digital input or from a HIM. A separate manual reference port for use only when the request comes from a digital input can be configured through P563 [DI ManRef Sel]. (To see P564 [DI ManRef AnlgHi], set P301 [Access Level] to 1 "Advanced.") If P328 [Alt Man Ref Sel] is configured, it overrides P563 [DI ManRef Sel] and provides the manual reference.

If P563 [DI ManRef Sel] is an analog input, the maximum and minimum speeds can be configured through P564 [DI ManRef AnlgHi] and P565 [DI ManRef AnlgLo]. For analog input between the minimum and maximum, the drive derives the speed from these parameters through linear interpolation.

Hand-Off-Auto

The Auto/Manual feature can be used in conjunction with a Hand-Off-Auto Start to create a H-O-A switch that starts the drive and requests manual control at the same time, allowing for a local speed reference to control the drive. See Hand-Off-Auto on page 64 for more details on the Hand-Off-Auto Start feature.

In the circuit below, a speed potentiometer was added to the analog input to provide a speed reference to the drive. When the H-O-A switch is moved from Auto to Hand, the digital input block requests manual control and issues a start command to the drive. If the digital input port receives manual control, the drive accelerates to the reference speed from the analog input. All attempts to change the speed except from the analog input are blocked. If the drive is stopped while in Hand, switch the H-O-A switch to Off and then back to Hand to restart the drive.

If another port has manual control of the drive, but does not have exclusive ownership of the logic commands (due to P326 [Manual Cmd Mask]), turning the switch to Hand causes the drive to begin moving but for the analog input to have no control over the speed.

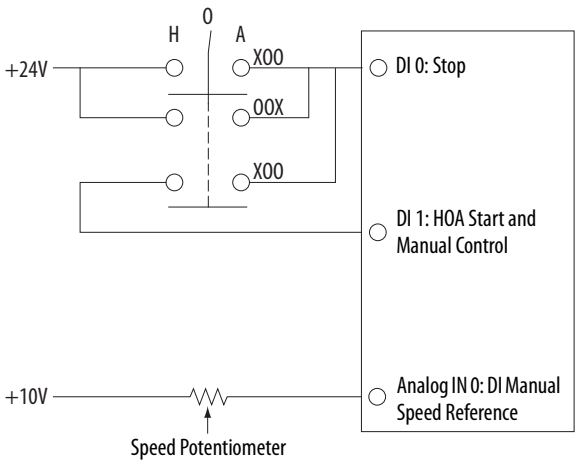

For this circuit, set the following parameters (P301 [Access Level] must be set to 1 “Advanced” to see P563 [DI ManRef Sel]).

Number	Parameter Name	Value
158	DI Stop	Digital Input 0
172	DI Manual Ctrl	Digital Input 1
176	DI HOA Start	Digital Input 1
324	Logic Mask	xxxxxxxxxxxxxx1 (Digital In)
326	Manual Cmd Mask	xxxxxxxxxxxxxx1 (Digital In)
327	Manual Ref Mask	xxxxxxxxxxxxxx1 (Digital In)
563	DI ManRef Sel	Anlg In0 Value

The drive requests Manual mode, start, and tracks the reference speed coming from the Analog Input when the H-O-A switches to Hand. (The HIM still reads Auto. This display changes only when the HIM has control of Manual mode).

Safe Limited Speed

Safe Limited Speed through the PowerFlex Safe Speed Monitor option module uses Manual mode to control the speed of the drive. When Safe Limited Speed monitoring is enabled, the safety module requests manual control of the drive. If the drive does not reach a safe speed, as defined on the option module by P55 [Safe Speed Limit] and within P53 [LimSpd Mon Delay], the drive faults.

While the option module uses the Manual mode, it has no way to provide a speed reference or start the drive. The following parameters must thus be configured.

P326 [Manual Cmd Mask]
Turn off the bit corresponding to the safety option’s port to allow modules installed in other ports to continue to control the drive when it is operating in Manual mode. For example, if the safety option is installed in port 6, then turn off Bit 6 in this parameter.

P327 [Manual Ref Mask]
Turn on the bit corresponding to the safety option’s port to allow the safety option to command the drive to use its Manual Speed Reference when it is operating in Manual mode. For example, if the safety option is installed in port 6, then turn on Bit 6 in this parameter.

P328 [Alt Man Ref Sel]
Set this parameter to select the desired speed reference when the drive is operating in Manual mode. For example, set this parameter to the value Port 0: Preset Speed 1 to configure the drive to use P571 [Preset Speed 1] as the Manual Speed Reference. In this case, P571 [Preset Speed 1] must be less than P55 [Safe Speed Limit] in the safety option to avoid causing an SLS Speed Fault.

See the Safe Speed Monitor Option Module for PowerFlex 750-Series AC Drives Safety Reference Manual, publication 750-RM001, for more information.

Automatic Device Configuration

Automatic Device Configuration (ADC) supports the automatic download of configuration data to a Logix controller that has an EtherNet/IP connection to a PowerFlex 755 drive (firmware 4.001 or later) and its associated peripherals ADC is supported in the following:

- RSLogix 5000 software, version 20 or later
- Studio 5000 environment, version 21 or later

Project files (.ACD files) created with this software contain the configuration settings for PowerFlex drives in the project. When the project is downloaded to the controller, the configuration settings are transferred to controller memory. Earlier programming software required a manual process to download configuration settings to the controller.

ADC can also work in tandem with Firmware Supervisor. If Firmware Supervisor is set up and enabled for a drive (Exact Match keying must be used), the drive/peripheral is automatically upgraded (if necessary) prior to any ADC operation for that port.

Information on Automatic Device Configuration (ADC) can be found in the PowerFlex 755 Embedded EtherNet/IP Adapter User Manual, publication 750COM-UM001, Chapter 4, Configuring the I/O includes the following topics:

- Description of the ADC functionality
- How the Drive Add-On Profiles (AOPs) affect ADC
- Configuring a PowerFlex 755 Drive (firmware 4.001 or later) for ADC
- ADC and Logix Memory
- Storing the Drive's and Peripherals' Firmware in the Logix Controller (Firmware Supervisor)
- Special Considerations When Using a DeviceLogix software Program
- Special Considerations When Using a 20-750-S1 Safe Speed Monitor Module
- Monitoring the ADC Progress
- Examples of potential issues and solutions

Autotune

The Autotune feature is used to measure motor characteristics. The Autotune feature is made up of several individual tests, each of which is intended to identify one or more motor parameters. These tests require motor nameplate information to be entered into the drive parameters. Although some of the parameter values can be changed manually, measured values of the motor parameters provide the best performance. Each motor control mode requires its own set of tests to be performed. The information obtained from these measurements is stored in the drives non volatile memory for use during operation of the drive. The feature lets these tests to be separated into tests that don't require motor rotation (Static Tune), all tests within the selected control mode (Rotate Tune), or if the control mode requires the Inertia (Inertia Tune).

The Autotune tests are selected through the P70 [Autotune]. The feature provides a manual or automatic method for setting P73 [IR Voltage Drop], P74 [Ixo Voltage Drop] and P75 [Flux Current Ref]. Valid only when P35 [Motor Ctrl Mode] is set to 1 "Induction SV," 2 "Induct Econ," or 3 "Induction FV."

Other motor control modes such as Permanent Magnet and Interior Permanent magnet, populate other parameters associated with those control modes. See the autotune parameter set below.

Tests

Four Autotune selections are available in the PowerFlex 755 drive control. All four selections are selected from the Autotune parameter.

P70 [Autotune]

- 0 = Ready
- 1 = Calculate
- 2 = Static Tune
- 3 = Rotate Tune
- 4 = Inertia Tune

Ready

Parameter returns to this setting following a Static Tune or Rotate Tune, at which time another start transition is required to operate the drive in Normal mode. It also permits manually setting P73 [IR Voltage Drop], P74 [Ixo Voltage Drop], and P75 [Flux Current Ref].

Calculate

When the Autotune parameter is set to Calculate (default), the drive uses motor nameplate data to automatically set P73 [IR Voltage Drop], P74 [Ixo Voltage Drop], P75 [Flux Current Ref] and P621 [Slip RPM at FLA].

P73 [IR Volt Drop], P87 [PM IR Voltage], P79 [Encdrlss VltComp], P74 [Ixo Voltage Drop], P75 [Flux Current Ref], P93 [PM Dir Test Cur], and the Slip Frequency parameters are updated based on nameplate parameter values. When a nameplate parameter value is changed, the Autotune parameters are updated based on the new nameplate values.

When using Calculate, updated values come from a lookup table.

Static Tune

When the Autotune parameter is set to Static, only tests that do not create motor movement are run. A temporary command that initiates a non-rotational motor stator resistance test for the best possible automatic setting of P73 [IR Voltage Drop] in all valid modes and a non-rotational motor leakage inductance test for the best possible automatic setting of P74 [Ixo Voltage Drop] in a Flux Vector (FV) mode. A start command is required following initiation of this setting. Used when motor cannot be rotated.

Rotate Tune

The actual tests performed when Static and Rotate Tune selections are made, differ for the available motor control modes, Feedback Type and motor type selected. The tests performed are dependent on the settings of P35 [Motor Ctrl Mode], P125 [Pri Vel Fdbk Sel], and P70 [Autotune]. The parameters that are updated are then dependent on the tests run and in some cases calculated values for some parameters are used to update other parameters. Refer to Table 3.

A temporary command initiates a Static Tune and is then followed by a rotational test for the best possible automatic setting of P75 [Flux Current Ref]. In Flux Vector (FV) mode, with encoder feedback, a test for the best possible automatic setting of P621 [Slip RPM at FLA] is also run. A start command is required following initiation of this setting.

IMPORTANT	If using rotate tune for a Sensorless Vector (SV) mode, uncoupled the motor from the load or results can be invalid. With a Flux Vector (FV) mode, either a coupled or uncoupled load produces valid results. Caution must be used when connecting the load to the motor shaft and then performing an autotune. Rotation during the tune process can exceed machine limits.

Table 3 - Autotune Value Source

Control Mode	Motor Type	Feedback Select	Autotune	Rs	Xo	Idlt	Rslt	Id	Rsld	Slip	Encrls	Cemf	PmOffset
VF	Induction	NA	Static	ON	OFF	OFF	OFF	OFF	ON	OFF	OFF	OFF	OFF
			Dynamic	ON	OFF	OFF	OFF	ON	ON	OFF	OFF	OFF	OFF
	PM	NA	Static	ON	OFF	OFF	OFF	OFF	OFF	OFF	OFF	OFF	OFF
			Dynamic	ON	OFF	OFF	OFF	OFF	OFF	OFF	OFF	OFF	OFF
	Reluctance	NA	Static	ON	OFF	OFF	OFF	OFF	OFF	OFF	OFF	OFF	OFF
			Dynamic	ON	OFF	OFF	OFF	ON	OFF	OFF	OFF	OFF	OFF
FV	Induction	Encoder	Static	ON	ON	ON	OFF	OFF	OFF	OFF	OFF	OFF	OFF
			Dynamic	ON	ON	OFF	OFF	ON	OFF	ON	OFF	OFF	OFF
		Encoderless	Static	ON	ON	ON	ON	OFF	OFF	OFF	OFF	OFF	OFF
			Dynamic	ON	ON	ON	ON	ON	ON	OFF	ON	OFF	OFF
	PM	Encoder	Static	OFF	OFF	OFF	OFF	OFF	OFF	OFF	OFF	OFF	OFF
			Dynamic	ON	ON	OFF	OFF	OFF	OFF	OFF	OFF	ON	ON
		Encoderless	Static	ON	ON	OFF	OFF	OFF	OFF	OFF	OFF	OFF	OFF
			Dynamic	ON	ON	OFF	OFF	OFF	OFF	OFF	OFF	ON	OFF
	Reluctance	Encoder	Static	OFF	OFF	OFF	OFF	OFF	OFF	OFF	OFF	OFF	OFF
			Dynamic	OFF	OFF	OFF	OFF	OFF	OFF	OFF	OFF	OFF	OFF
		Encoderless	Static	OFF	OFF	OFF	OFF	OFF	OFF	OFF	OFF	OFF	OFF
			Dynamic	OFF	OFF	OFF	OFF	OFF	OFF	OFF	OFF	OFF	OFF

Inertia Tune

The Inertia Autotune selection involves only one test. Several parameters are updated from the test results. Refer to the tables in the Individual Tests section.

A temporary command initiates an inertia test of the motor/load combination. The motor ramps up and down while the drive measures the amount of inertia. This option applies only to FV modes selected in P35 [Motor Ctrl Mode]. Obtain final test results with the load coupled to the motor as long as the rotation won't damage the machine.

Test Dependencies

When running the flux test, the selected accel rate is used unless it is less than 10 seconds. In this case, 10 seconds is forced. In the case of the Inertia test, a 0.1 second accel rate is used. The selected direction used during normal operation is used for all rotation tests. Also, during any rotate test, the normal speed limits are enforced.

The thermal manager is always being run in the 2 ms loop, which provides protection during all of the Autotune tests.

Individual Tests

Some of the following tests are executed during an Autotune.

Resistance Test

This test is a Static test whether Static or Rotate is selected. Used to measure Stator resistance.

Inductance Tests

This test is a Static test whether Static or Rotate is selected. One test is used for Induction motors and a another is used for PM motors. The result from the Induction test is placed into the Ixo parameter and the PM test is placed into the IXd and IXq parameters.

Flux Test

This test is a Rotate test that measures the current under a no load condition. The results are used for the flux current. If a Static test is used, the resulting value is from a lookup table.

Slip Test

This test is a Rotate test that measures the difference between the rotor speed and the stator speed. This measurement is taken during acceleration.

PM Offset Test

This test can create a small amount of motor movement so it needs to be performed with the Rotate selection. The test reads the encoder position when the drive outputs zero hertz.

Inertia Test

This test is a stand alone test that is used to measure the system inertia.

The drive sets this value in P76 [Total Inertia] as seconds of inertia. This reflects the time it takes to accelerate the load at 100% torque to base speed. This information can be very useful in determining the total inertia (in lb•ft^2) that is connected to a motor shaft.

Using the following formula, $Tacc = \frac{WK^2 \times \Delta N}{308(t)}$

and rearranging it to $WK^2 = \frac{Tacc \times 308 \times (t)}{\Delta N}$

we have a formula that isolates the connected inertia.

For the variables, Tacc is the 100% rating of the drive in lb•ft. Let's say I'm using a 10 Hp drive with a 10 Hp motor. We can rearrange the Horsepower formula below to solve for torque in lb•ft.

My motor is 10hp, 1785RPM, $HP = \frac{T \times Speed}{5252}$

and rearranging it to $T = \frac{HP \times 5252}{Speed}$

So let's plug in the numbers. $T = \frac{10 \times 5252}{1785}$ T = lb•ft

And (t) comes from what the drive reports as seconds of inertia after running the inertia tune. Let's say that the drive reported 2.12 seconds of inertia. And now organizing the variables we have

Tacc = 29.42
(t) = 2.12
N = 1785

plugging these into the formula, $WK^2 = \frac{Tacc \times 308 \times (t)}{\Delta N}$ $WK^2 = 10.76$

After these calculations, one can conclude that the connected inertia is equal to 10.76 lb•ft^2. Multiplying by 0.04214011 you get 0.453 kg•m^2.

What effect can P71 [Autotune Torque] have on these calculations? Regardless of the value entered here, the drive interpolates as if this value was 100%. So the seconds of inertia reported by the drive always reflects 100% torque.

CEMF Test

This is a Rotate test used to measure a PM motors CEMF.

Autotune Parameters Information about some other Autotune Parameters not covered above.

Autotune Parameters

P71 [Autotune Torque]
Typically the default value of 50% is sufficient for most applications. You have the option of increasing this value or decreasing the value.

P73 [IR Voltage Drop]
The voltage drop due to resistance.

P74 [Ixo Voltage Drop]
The voltage drop due to Inductance.

P75 [Flux Current Ref]
The current necessary to flux up the motor. This value come from a lookup table for Static tunes and is measured during a Rotate tune. Obviously a rotate tune gives more accurate results.

P76 [Total Inertia]
Reported as seconds of inertia. See description above.

P77 [Inertia Test Lmt]
A number entered in this parameter limits the inertia tune test to a maximum number of revolutions. If violated, the drive faults on F144 "Autotune Inertia." Also, when a value is entered and the drive determines that the number of revolutions will be exceeded it goes into a decel and stops before the value is exceeded.

P78 [Encdrlss AngComp] and **P79 [Encdrlss VltComp]**
These parameters are valid only for Flux Vector motor control mode and open loop. P78 is populated only by a rotate tune. P79 is populated by a Static measurement.

P80 [PM Cfg]
This configuration parameter enables certain tests to be performed based on the motor connected.

Permanent Magnet Motors

Parameters P81 through P93 and P120 are all populated by an autotune when the motor selected is permanent magnet. The value for these parameters are determined only by a rotate tune.

Interior Permanent Magnet Motors

Parameters P1630 through P1647 are all populated by an autotune when the motor selected is interior permanent magnet. The value for these parameters are determined only by a rotate tune.

Auxiliary Power Supply

The optional Auxiliary Power Supply module, 20-750-APS, is designed to provide power to a single drive's control circuitry in the event incoming supply power to the drive is removed or lost.

When connected to a user supplied 24V DC power source, the communication network functions remain operational and on-line. A DeviceNet program can also continue to run and control any associated input and outputs.

The auxiliary power supply module is designed to power all peripherals, I/O, and connected feedback devices.

Bus Regulation

Some applications create an intermittent regeneration condition. The following example illustrates such a condition. The application is hide tanning, in which a drum is partially filled with tanning liquid and hides. When the hides are being lifted (on the left), motoring current exists. However, when the hides reach the top and fall onto a paddle, the motor regenerates power back to the drive, creating the potential for an overvoltage fault.

When an AC motor regenerates energy from the load, the drive DC bus voltage increases unless there is another means, of dissipating the energy, such as a dynamic braking chopper/resistor, or the drive takes some corrective action prior to the overvoltage fault value.

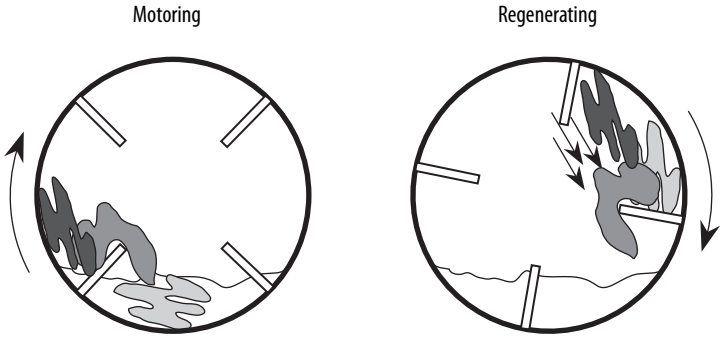

With bus regulation disabled, the bus voltage can exceed the operating limit and the drive faults to protect itself from excess voltage.

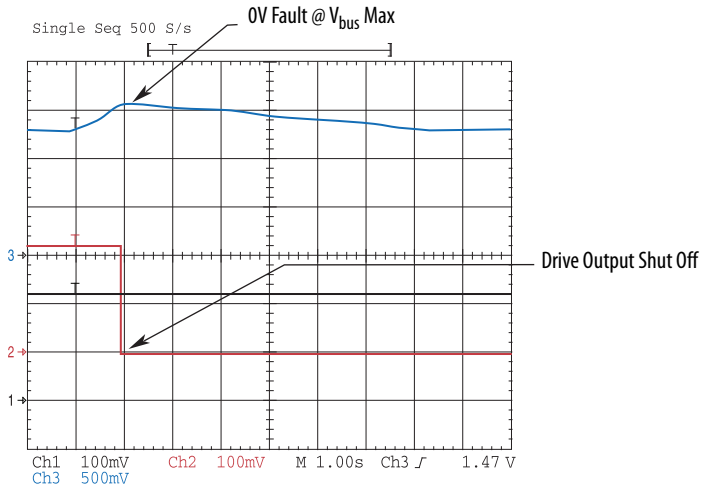

With bus regulation enabled, the drive can respond to the increasing voltage by advancing the output frequency until the regeneration is counteracted. This keeps the bus voltage at a regulated level below the trip point.

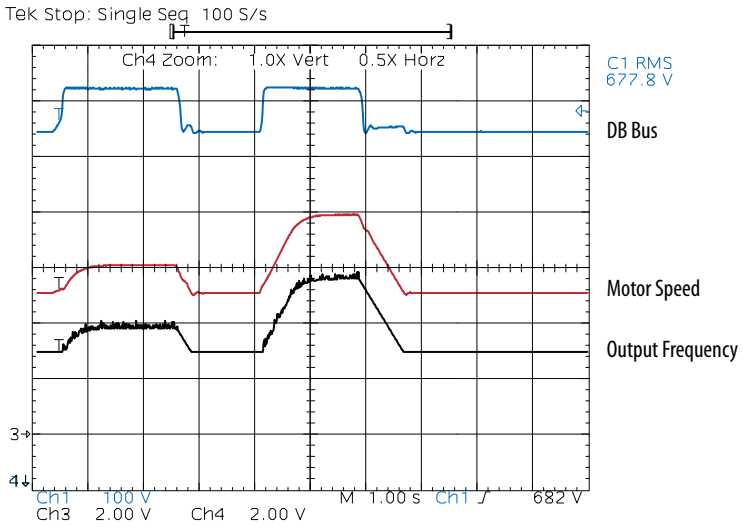

The bus voltage regulator takes precedence over acceleration/deceleration.

Select bus voltage regulation in the Bus Reg mode parameter.

Operation

Bus voltage regulation begins when the bus voltage exceeds the bus voltage regulation setpoint V_{reg} and the switches shown in Figure 1 move to the positions shown.

	SW 1	SW 2	SW 3	SW 4	SW 5
Bus Regulation	Limit	Bus Reg	Open	Closed	Don't Care

Figure 1 - Bus Voltage Regulator, Current Limit, and Frequency Ramp

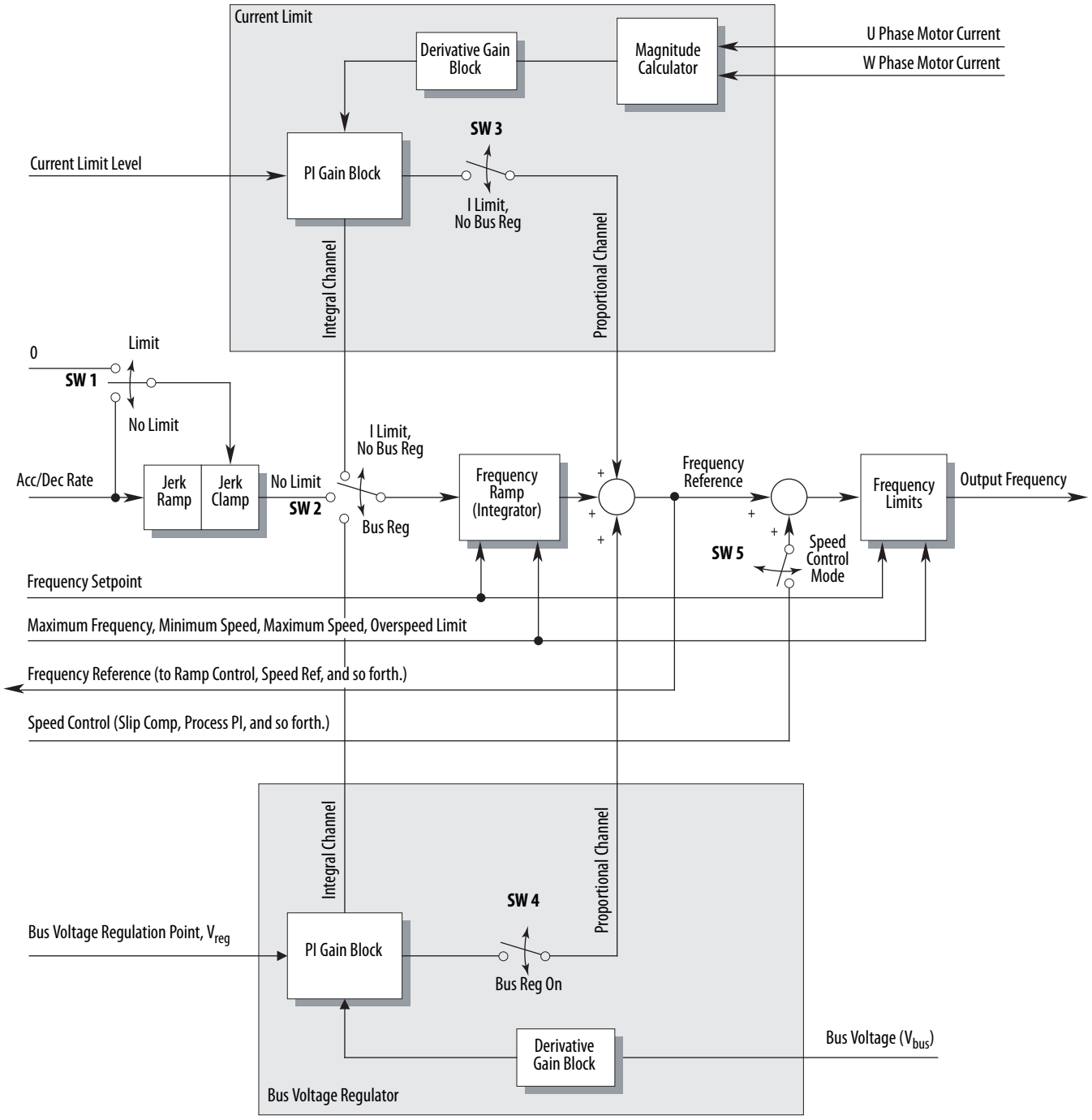

The derivative term senses a rapid rise in the bus voltage and activates the bus regulator prior to actually reaching the bus voltage regulation setpoint V_{reg}. The derivative term is important because it minimizes overshoot in the bus voltage when bus regulation begins thereby attempting to avoid an overvoltage fault. The integral channel acts as the acceleration or deceleration rate and is fed to the frequency ramp integrator. The proportional term is added directly to the output of the frequency ramp integrator to form the output frequency. The output frequency is then limited to a maximum output frequency.



ATTENTION: The "adjust freq" portion of the bus regulator function is extremely useful for preventing nuisance overvoltage faults resulting from aggressive decelerations, overhauling loads, and eccentric loads. It forces the output frequency to be greater than commanded frequency while the drive's bus voltage is increasing towards levels that would otherwise cause a fault. However, it can also cause either of the following two conditions to occur.

1. Fast positive changes in input voltage (more than a 10% increase within 6 minutes) can cause uncommanded positive speed changes. However an "OverSpeed Limit" fault occurs if the speed reaches [Max Speed] + [Overspeed Limit]. If this condition is unacceptable, take action to 1) limit supply voltages within the specification of the drive and, 2) limit fast positive input voltage changes to less than 10%. If this operation is unacceptable and the necessary actions cannot be taken, the "adjust freq" portion of the bus regulator function must be disabled (see parameters 372 and 373).

2. Actual deceleration times can be longer than commanded deceleration times. However, a "Decel Inhibit" fault is generated if the drive stops decelerating altogether. If this condition is unacceptable, the "adjust freq" portion of the bus regulator must be disabled (see parameters 372 and 373). In addition, installing a properly sized dynamic brake resistor provides equal or better performance in most cases. **Important**: These faults are not instantaneous. Test results have shown that they can take between 2…12 seconds to occur.

Bus Regulation Modes

The drive can be programmed for one of five different modes to control the DC bus voltage:

- Disabled
- Adjust Frequency
- Dynamic Braking
- Both with Dynamic Braking first
- Both with Adjust Frequency first

P372 [Bus Reg Mode A] is the mode normally used by the drive unless the "DI BusReg Mode B" digital input function is used to switch between modes instantaneously, in which case P373[Bus Reg Mode B] becomes the active bus regulation mode.

The bus voltage regulation setpoint is determined from bus memory (a means to average DC bus over a period of time). The following tables and figure describe the operation.

Voltage Class	DC Bus Memory	DB On Setpoint	DB Off Setpoint
480	<685V DC	750V DC	On - 8V DC
	>685V DC	Memory + 65V DC	

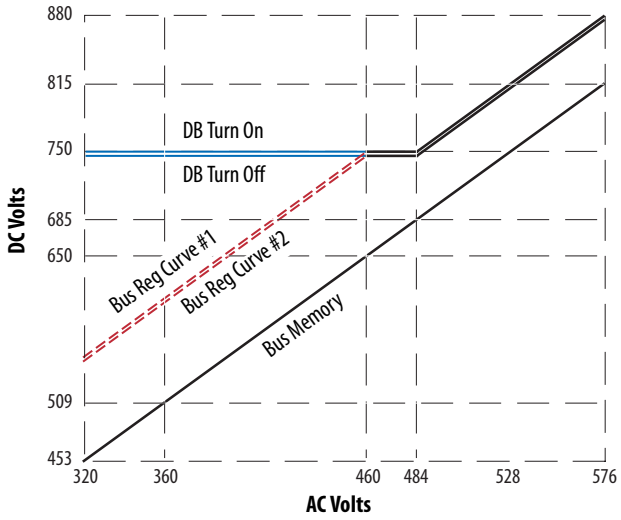

Option 0 "Disabled"

If [Bus Reg Mode *n*] is set to 0 "Disabled" The Voltage Regulator is off and the DB transistor is disabled. Energy returning to the DC bus increases the voltage unchecked and trips the drive on over voltage once the voltage threshold is reached.

Figure 2 - PowerFlex 750-Series Bus Regulation – Disabled

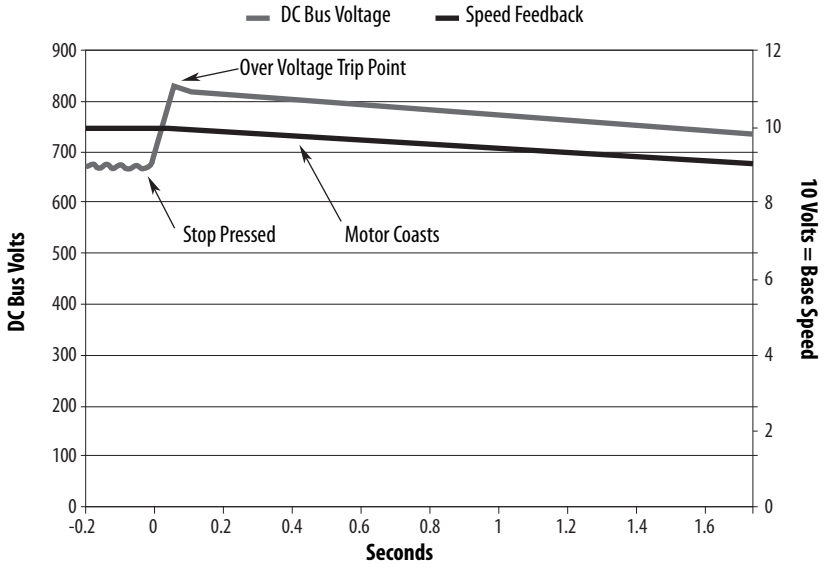

Option 1 "Adjust Freq"

If [Bus Reg Mode *n*] is set to 1 "Adjust Freq" The Bus Voltage Regulator is enabled. The Bus Voltage Regulator setpoint follows "Bus Reg Curve 1" below a DC Bus Memory of 650V DC and follows the "DB Turn On" above a DC Bus Memory of 650V DC (Table 5). For example, with a DC Bus Memory at 684V DC, the adjust frequency setpoint is 750V DC.

Below you can see the DC bus is being regulated as the speed is sacrificed to be sure the drive does not trip on over voltage.

Figure 3 - PowerFlex 750-Series Bus Regulation – Adjust Frequency

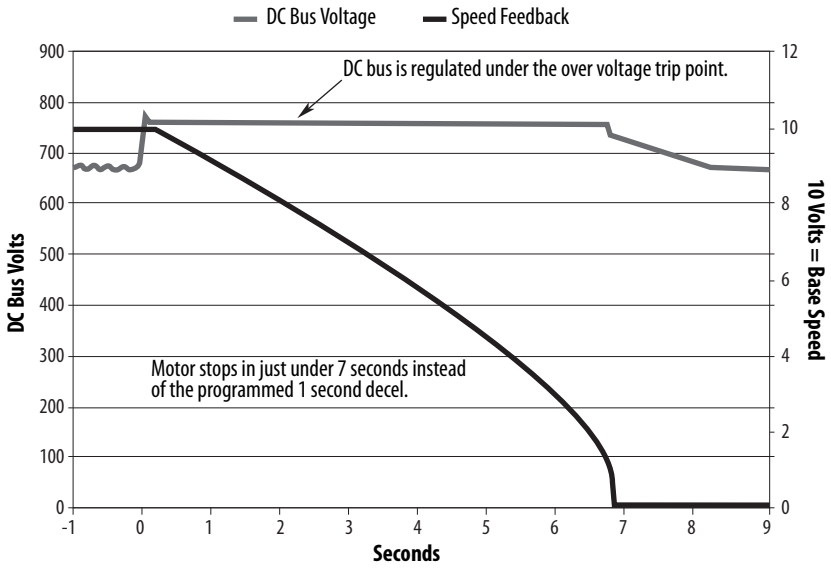

Option 2 "Dynamic Brak"

If [Bus Reg Mode *n*] is set to 2 "Dynamic Brak" The Dynamic Brake Regulator is enabled. In Dynamic Brake mode the Bus Voltage Regulator is turned off. The "DB Turn On" and turn off curves apply. For example, with a DC Bus Memory at 684V DC, the Dynamic Brake Regulator turns on at 750V DC and turns back off at 742V DC. The Dynamic Brake mode can operate differently depending upon the setting of P382 [DB Resistor Type] either External or Internal.

Internal Resistor

If the drive is set up for an internal resistor, there is a protection scheme built into the firmware such that if it is determined that too much power has been dissipated into the resistor the firmware does not allow the DB transistor to fire any longer. Thus the bus voltage rises and trips on over voltage.

Figure 4 - PowerFlex 750-Series Bus Regulation – Internal Dynamic Brake Resistor

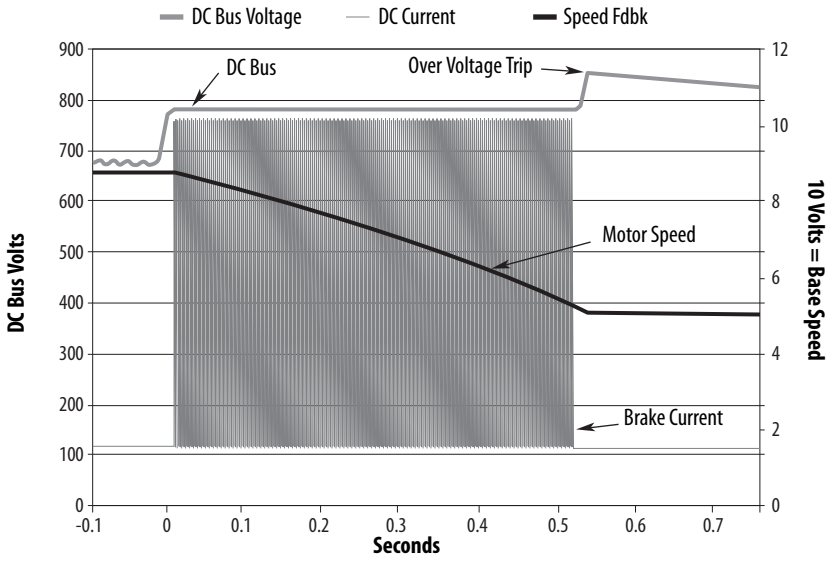

External Resistor

If the drive is set up for an external resistor and the resistor has been sized correctly and the regenerative power limit is set to a value that enables the regenerative power to be fully dissipated, the DB transistor continues to fire throughout the decel time.

Figure 5 - PowerFlex 750-Series Bus Regulation – External Dynamic Brake Resistor

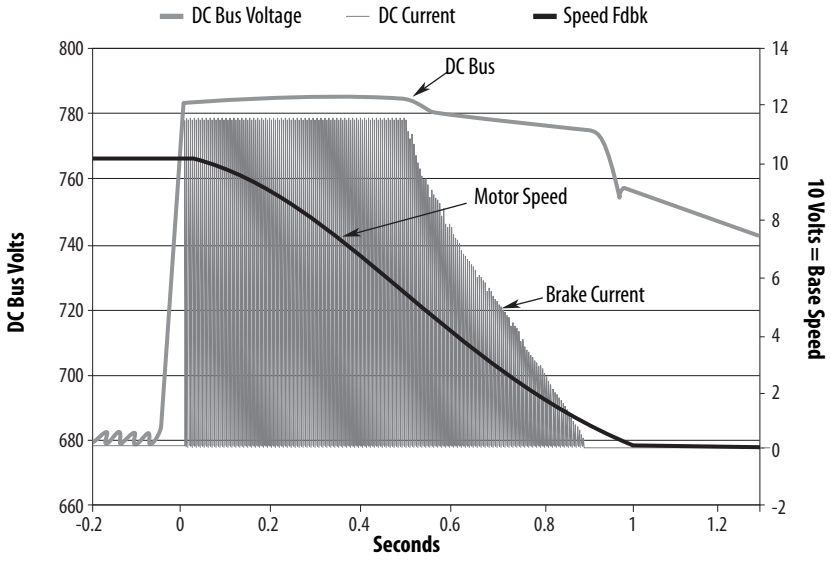

The DB current seems as if it is decreasing toward the end of the decel. This is just a result of the sweep time of the oscilloscope and instrumentation. After all, it's not known as "Ohm's Suggestion." The point is evident that the DB transistor is pulsing through the decel.

Option 3 "Both DB 1st"

If [Bus Reg Mode *n*] is set to 3 "Both DB 1st" Both regulators are enabled, and the operating point of the Dynamic Brake Regulator is lower than that of the Bus Voltage Regulator. The Bus Voltage Regulator setpoint follows the "DB Turn On" curve. The Dynamic Brake Regulator follows the "DB Turn On" and turn off curves. For example, with a DC Bus Memory between 650 and 685V DC, the Bus Voltage Regulator setpoint is 750V DC and the Dynamic Brake Regulator turns on at 742V DC and back off at 734V DC.

It is possible that the drive can react differently between Flux Vector mode and Sensorless Vector mode. The important thing to remember here is that in SV control, the drive does **not** use the value entered into P426 [Regen Power Lmt]. If left at default (-50%) and the decel is such that it creates a large amount of regen power, the drive again attempts to protect the resistor.

Consider the plots below.

Option 4 "Both Frq 1st"

If [Bus Reg Mode *n*] is set to 4 "Both Frq 1st" Both regulators are enabled, and the operating point of the Bus Voltage Regulator is lower than that of the Dynamic Brake Regulator. The Bus Voltage Regulator setpoint follows the "Bus Reg Curve 2" below a DC Bus Memory of 650V DC and follows the "DB Turn Off" curve above a DC Bus Memory of 650V DC (Table 4). The Dynamic Brake Regulator follows the "DB Turn On" and turn off curves. For example, with a DC Bus Memory at 684V DC, the Bus Voltage Regulator setpoint is 742V DC and the Dynamic Brake Regulator turns on at 750V DC and back off at 742V DC.

Figure 6 shows that upon a stop command the bus voltage rises immediately to a point where the DB transistor turns on briefly bringing the voltage down to a point where the bus regulator can regulate the bus by adjusting the output frequency (speed).

Figure 6 - PowerFlex 750-Series Bus Regulation – Both Adj First

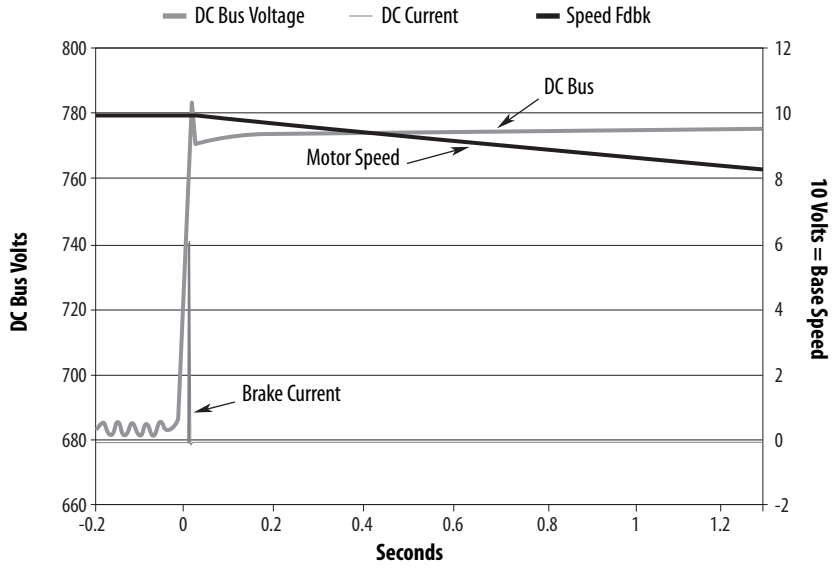

Flux Vector (FV) Control

With the Regen Power Limit left at default, and a decel time of 0.1 seconds, the drive is limiting the amount of power to a point where the resistor could be heating up due to duty cycle considerations. So the drive stops the DB transistor from firing and switches to "Adjust Frequency" to regulate the bus and then enables another DB pulse and then back to adjust frequency and so on until the bus voltage remains below the trigger level.

Figure 7 - PowerFlex 750-Series Bus Regulation – Both DB First FV

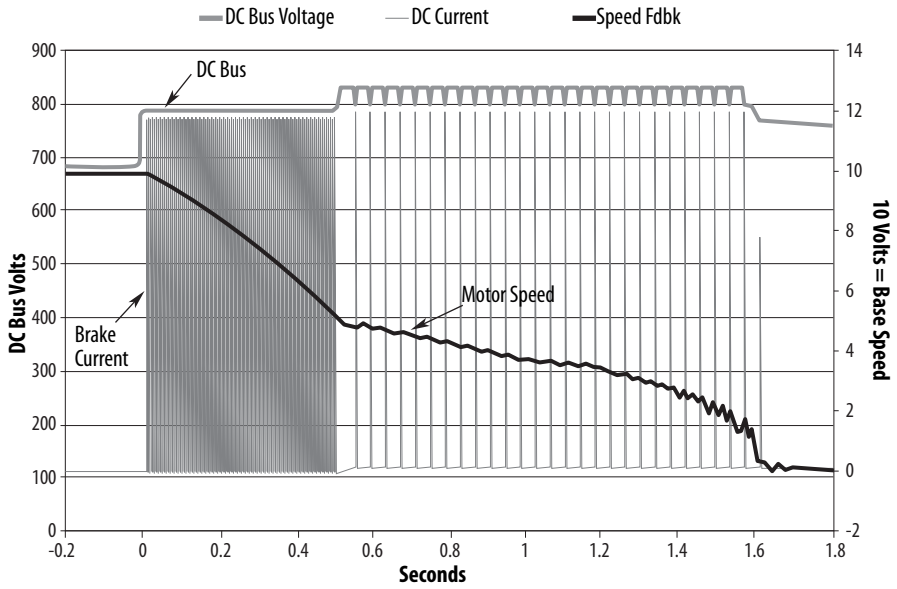

If the Regen Power Limit is opened up to 100% for instance, the plot will look exactly the same as the Sensorless Vector mode plot show below.

Sensorless Vector (SV) Control

Because the drive is not limiting the regen power the DB is able to dissipate the power the entire decel time before duty cycle considerations limits the DB capability.

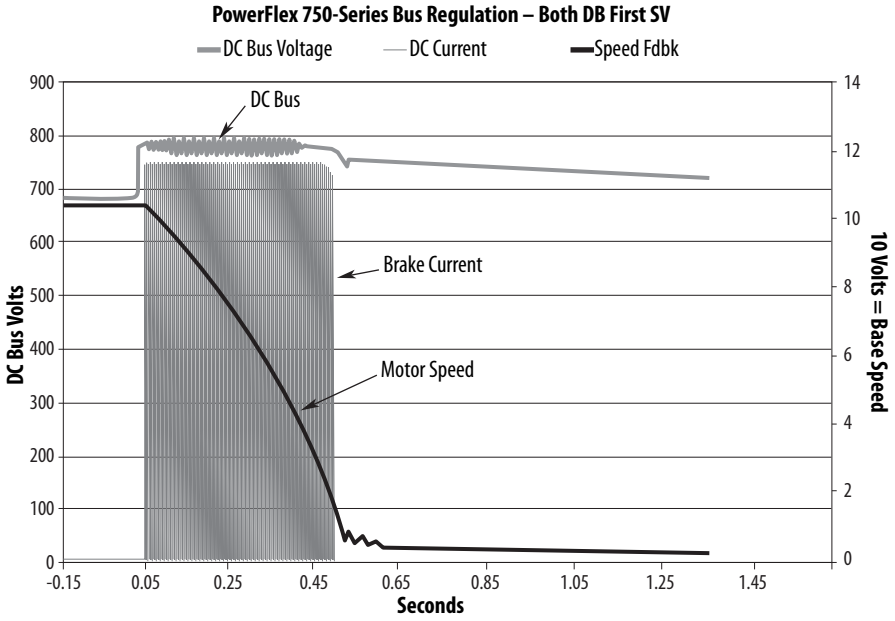

Table 4 - Bus Regulation Curves

Voltage Class	DC Bus Memory	Bus Reg Curve 1	Bus Reg Curve 2
480	< 650V DC	Memory + 100V DC	Curve 1 - 8V DC
	650V DC ≤ DC Bus Memory ≤ 685V DC	750V DC	
	> 685V DC	Memory + 65V DC	

Level/Gains

The following parameters are Level/Gains related to bus regulation.

P374 [Bus Reg Lvl Cfg]
Bus Regulation Level Configuration - Selects the reference used to determine the bus voltage regulation level for the bus voltage regulator and the reference used for the dynamic brake.

- "Bus Memory" (0) – References are determined based on P12 [DC Bus Memory].
- "BusReg Level" (1) – References are determined based on the voltage set in P375 [Bus Reg Level].

If coordinated operation of the dynamic brakes of a common bus system is desired, use this selection and set the P375 [Bus Reg Level] to coordinate the brake operation of the common bus drives.

P375 [Bus Reg Level]
Bus Regulation Level - Sets the turn-on bus voltage level for the bus voltage regulator and the dynamic brake.

Table 5 - Turn On Bus Voltage

P20 [Rated Volts] =	Default Turn On Volts =	Min/Max Setting =
< 252V	375V	375V / 389V
252…503V	750V	750 / 779V
504…629V	937V	937 / 974V
> 629V	1076V	1076 / 1118V

While the following parameters are listed and editable in the drive, they typically do not need to be adjusted in any way. Take care when adjusting because undesired operation can occur in another aspect of motor control.

P376 [Bus Limit Kp]
Bus Limit Proportional Gain - Enables a progressively faster decel when the drive is behind the programmed decel time by making the bus limiter more responsive. A higher value means the drive tries to decrease decel time.
This parameter is valid only in NON-Flux Vector modes.

P377 [Bus Limit Kd]
Bus Limit Derivative Gain - Lets you force the bus limit sooner. The higher the value the quicker the bus limit is hit and regulation starts. This can cause regulation below the typical setpoint (750VDC for 460V drive). Too high a value and normal operation of the motor can be affected. (60...60.5 Hz oscillation.)
This parameter is valid only in NON-Flux Vector modes.

P378 [Bus Limit ACR Ki]
Bus Limit Active Current Regulator Integral Gain - If you find your system makes the regulator unstable or oscillatory, a lower value in this parameter settles out the oscillations.
This parameter is valid only in NON-Flux Vector modes.

P379 [Bus Limit ACR Kp]
Bus Limit Active Current Regulator Proportional Gain - Determines the responsiveness of the active current and therefore, regenerated power and bus voltage. Raising this value can cause the output frequency (when in bus limit) to become noisy or jittery. Too low a value can cause the bus limit function to malfunction and result in a over voltage fault.
This parameter is valid only in NON-Flux Vector modes.

P380 [Bus Reg Ki]
Bus Regulator Integral Gain - When regulating the DC bus, the voltage tends to swing above and below the voltage setpoint in what looks like a ringing oscillation. This parameter affects that behavior. A lower the value reduces oscillation.
This parameter is valid only in Flux Vector modes.

P381 [Bus Reg Kp]
Bus Regulator Proportional Gain - This determines how fast the bus regulator is activated. The higher the value the faster the drive reacts once the DC voltage setpoint is reached.
This parameter is valid only in Flux Vector modes.

Once again, the likelihood of these parameters needing adjustment is highly unlikely. In fact, some descriptions related to the functionality of these parameters are intentionally left out of this text to eliminate undesired motor operation when they are adjusted unwisely.

Configurable Human Interface Module Removal

With the PowerFlex 750-Series the drives response to a HIM communication loss (removal) is configurable. This feature is available in drives with firmware revision 3.0 or later.

It is used to prevent unintended stopping of the drive by disconnecting the HIM. However, the HIM cannot be the sole source of a Stop command to enable this feature.

The configuration is similar to the communication adapter communication loss selections:

- 0 = Fault
- 1 = Stop
- 2 = Zero Data
- 3 = Hold Last
- 4 = Send Fault Config

The default setting is 0 “Fault.”

The HIM can be connected to one 1 of 3 ports per the parameters below. Each port is configured separately:

- P865 [DPI Pt1 Flt Actn] to determine the fault action at port 1.
- P866 [DPI Pt2 Flt Actn] to determine the fault action at port 2.
- P867 [DPI Pt3 Flt Actn] to determine the fault action at port 3.

If “Send Flt Cfg” is to be selected for the fault action, then configure the appropriate parameter below.

- P868 [DPI Pt1 Flt Ref] to set the speed reference if the HIM at port 1 is disconnected.
- P869 [DPI Pt2 Flt Ref] to set the speed reference if the HIM at port 2 is disconnected.
- P870 [DPI Pt3 Flt Ref] to set the speed reference if the HIM at port 3 is disconnected.

A constant value must be entered as the fault speed reference in this instance.

Droop Feature

Droop is used to shed load and is usually used when a soft coupling of two motors is present in an application. The master drive speed regulates and the follower uses droop so it does not oppose the master. The input to the droop block is the commanded motor torque. The output of the droop block reduces the speed reference. P620 [Droop RPM at FLA] sets the amount of speed, in RPM, that the speed reference is reduced when at full load torque. For example, when P620 [Droop RPM at FLA] is set to 50 RPM and the drive is running at 100% rated motor torque, the droop block subtracts 50 RPM from the speed reference.

Duty Rating

Applications require different amounts of overload current.

Normal Duty

Sizing the drive for Normal Duty enables the use of the highest continuous output current rating of the drive and an overload rating of 110% for 60 seconds (every 10 minutes) and 150% for 3 seconds (every minute).

Heavy Duty

For heavy duty applications, a drive one size larger than is required for the motor is used in the application and therefore provides a larger amount of overload current in comparison to the motor rating. Heavy Duty sizing provides at least 150% for 60 seconds (every 10 minutes) and 180% for 3 seconds (every minute).

Light Duty

The light duty setting, for a given normal duty rated drive, provides a higher continuous output current but with limited overload capability. When in light duty, the drive provides 110% for 60 seconds (every 10 minutes). The light duty setting is only available on PowerFlex 755 drives, frame 8 and larger.

The overload percentages are with respect to the connected motor rating.

The duty rating is programmed in P306 [Duty Rating]. This parameter is reset to the default setting if a Set Defaults “ALL” is executed. For drives rated under 7.5 kW (10 Hp) the normal duty and heavy duty continuous current ratings are the same, and have the heavy duty overload settings.

When changing the [Duty Rating], review P422 [Current Limit 1] and P423 [Current Limit 2].

Refer to the PowerFlex 750-Series AC Drives Technical Data, publication 750-TD001, for continuous and overload current ratings for each catalog number.

Feedback Devices

There are three different feedback option modules available for PowerFlex 750-Series AC Drives:

- Single Incremental Encoder (20-750-ENC-1)
- Dual Incremental Encoder (20-750-DENC-1)
- Universal Feedback (20-750-UFB-1)

The Dual Incremental Encoder and Universal Feedback modules each support up to two encoders while the Single Incremental Encoder supports one encoder. Multiple feedback option modules can be installed in the drive, however there is a limit of two feedback modules if using Integrated Motion on EtherNet/IP.

For more information on the option modules, including specifications and wiring information, see the PowerFlex 750-Series AC Drives Installation Instructions, publication 750-IN001.

For more information on encoder feedback options, including connections and compatibility, see Appendix E of the PowerFlex 750-Series Programming Manual, publication 750-PM001.

Flying Start

The Flying Start feature is used to start into a rotating motor, as quick as possible, and resume normal operation with a minimal impact on load or speed.

When a drive is started in its normal mode it initially applies a frequency of 0 Hz and ramps to the desired frequency. If the drive is started in this mode with the motor already spinning, large currents are generated. An over current trip can result if the current limiter cannot react quickly enough. The likelihood of an over current trip is further increased if there is a residual flux (back emf) on the spinning motor when the drive starts. Even if the current limiter is fast enough to prevent an over current trip, it can take an unacceptable amount of time for synchronization to occur and for the motor to reach its desired frequency. In addition, larger mechanical stress is placed on the application.

In Flying Start mode, the drive's response to a start command is to synchronize with the motors speed (frequency and phase) and voltage. The motor then accelerates to the commanded frequency. This process prevents an over current trip and significantly reduce the time for the motor to reach its commanded frequency. Because the drive synchronizes with the motor at its rotating speed and ramps to the proper speed, little or no mechanical stress is present.

The Sweep function is currently not in the PowerFlex 750-Series drives frame 8 and larger.

Configuration

Flying Start can be configured by setting P356 [FlyingStart Mode] to the following:

- 0 “Disabled”
- 1 “Enhanced”
- 2 “Sweep”

Disabled

Disables the feature.

Enhanced

An advanced mode that performs the motor reconnect quickly by using the motor’s CEMF as a means of detection. This mode is the typical setting for this feature.

Sweep

The Frequency Sweep mode is used with output sine wave filters. It attempts a reconnect by outputting a frequency starting at P520 [Max Fwd Speed]+ P524 [Overspeed Limit] and decreasing according to a slope that is modified by P359 [FS Speed Reg Ki] until there is a change in the monitored current indicating the speed of the spinning motor has been found. If the motor was not found from the forward sweep, the drive sweeps in the reverse direction from P521 [Max Rev Speed]+ P524 [Overspeed Limit].

Scope Plots

Flying Start - Sweep Mode

This plot shows a coasting motor. When a start is commanded, the output frequency jumps up to P520 [Max Fwd Speed]+ P524 [Overspeed Limit] at some current. As the sweep frequency decreases the current is monitored. When the sweep frequency matches the frequency of the coasting motor, the current reverses and detection is complete. The motor is accelerated back to commanded speed.

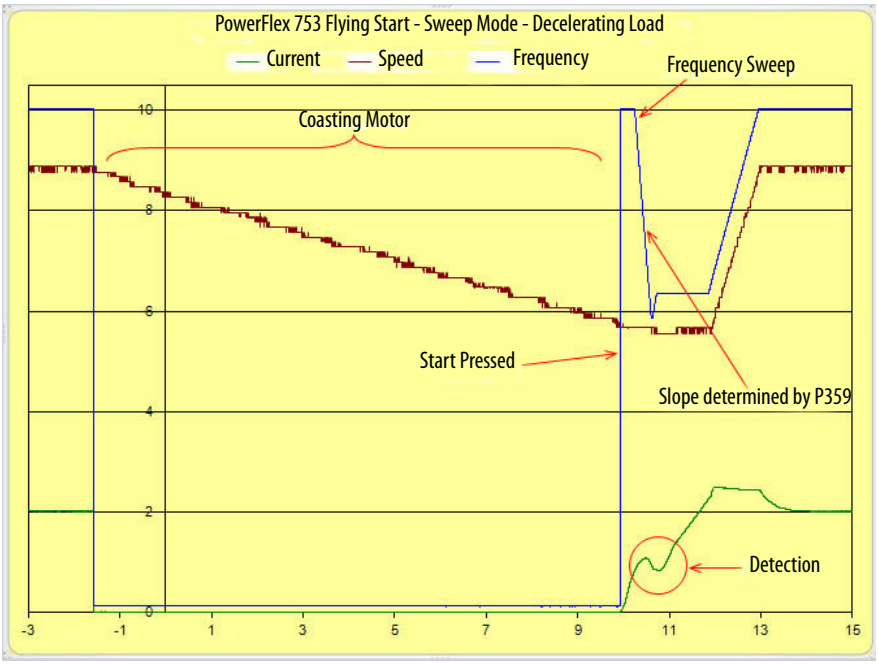

Flying Start - Sweep Slope A

This plot shows when the drive starts to sweep for the spinning motor, the frequency sweep has a certain slope associated with it. By modifying P359 [FS Speed Reg Ki] you can change the slope of this sweep.

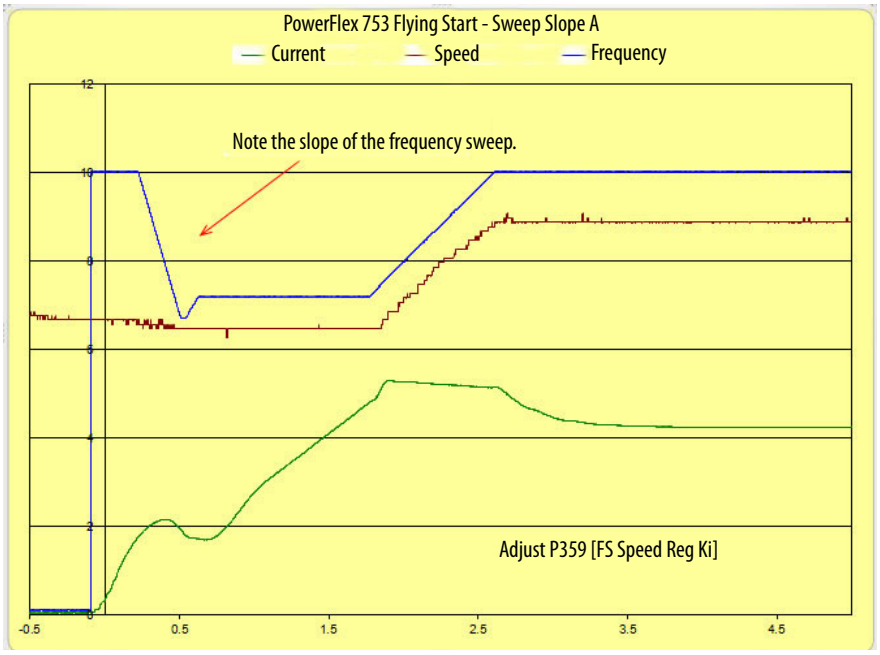

Flying Start - Sweep Slope B

This plot shows the result of increasing P359 [FS Speed Reg Ki]. The slope is extended.

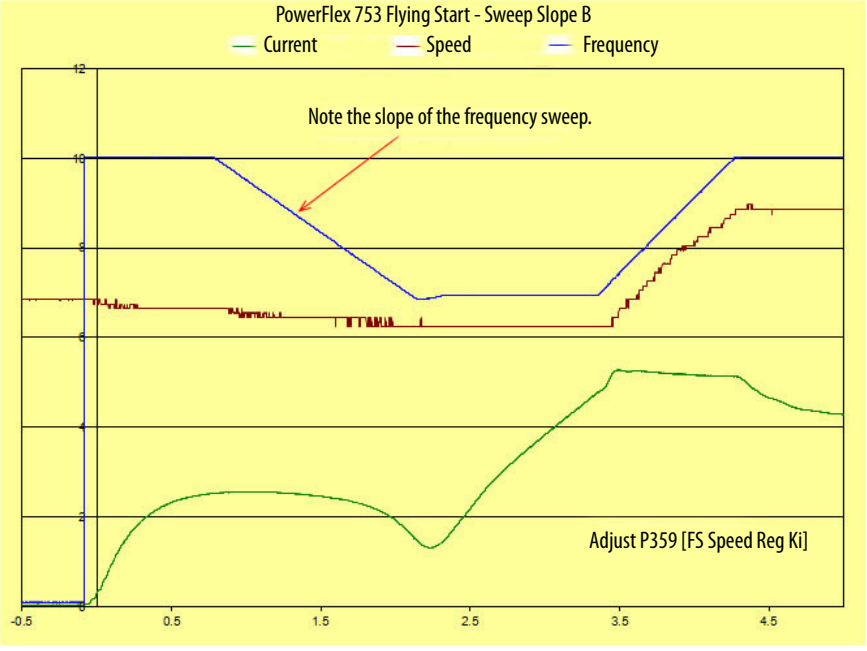

In the two samples shown above, the motor was decelerating. The sweep function and slope manipulation work the same if the motor was spinning at some constant speed.

Flying Start - Sweep Dip A

This plot shows the effect of modifying P360 [FS Speed Reg Kp]. In this plot a motor is spinning at some constant speed when the drive is issued a start command and the sweep routine is started. Note the current dip when the parameter is set to its lowest value and the drive has determined the frequency of the rotating motor. See the next plot when this parameter set to its highest setting.

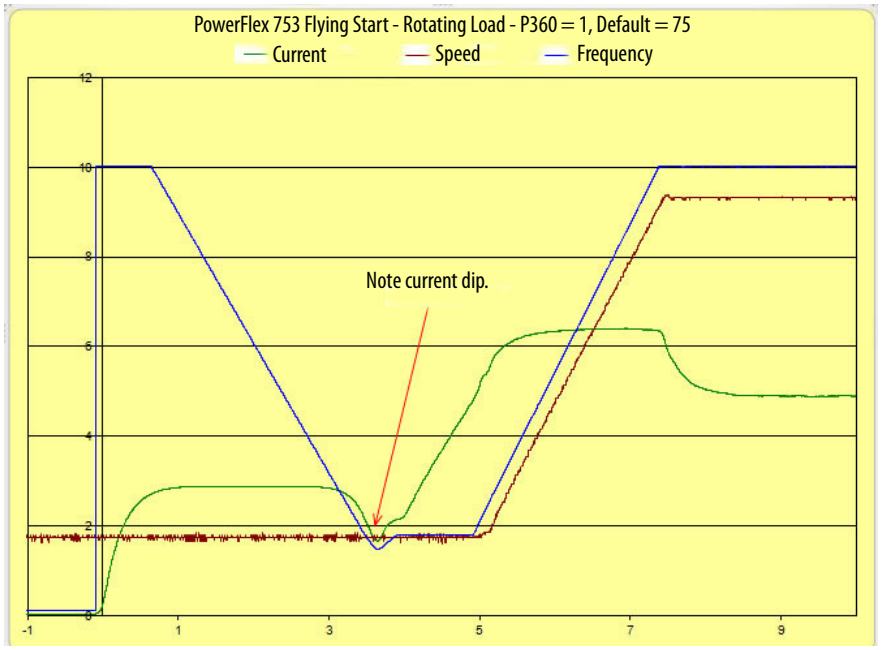

Flying Start - Sweep Dip B

This plot shows the effect of modifying P360 [FS Speed Reg Kp]. In this plot a motor that is spinning at some constant speed when the drive is issued a start command and the sweep routine is started. Note the current dip when the parameter is set to its highest value and the drive has determined the frequency of

the rotating motor. See the previous plot when this parameter set to its lowest setting.

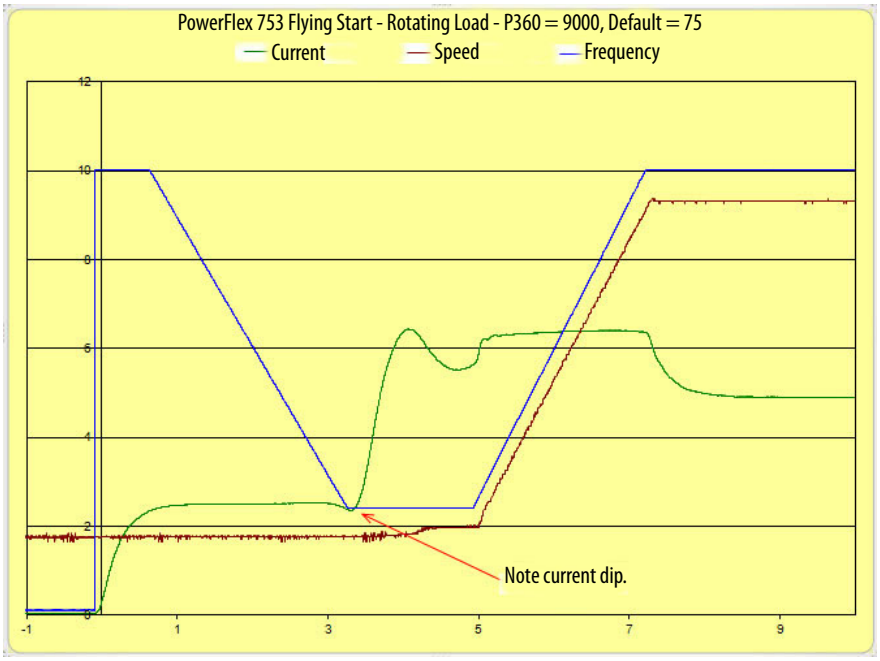

Flying Start - Sweep Reverse Rotating Motor

This plot shows the Sweep mode when the motor is rotating opposite from the commanded frequency. It starts the same as explained above. If it didn't detect the motor's speed as it reaches 3 Hz it begins to sweep in the opposite direction. From here the process continues the same as before.

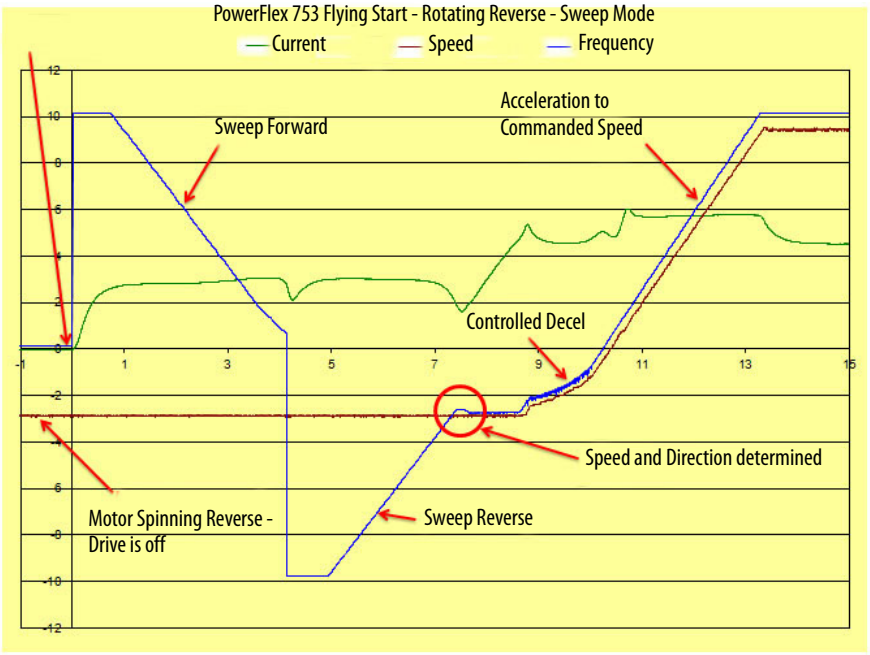

Flying Start - Enhanced Mode

This plot shows a very short time base of the Enhanced mode. If the drive detects the counter EMF of the motor it can instantly re-connect to the motor and accelerate to the commanded speed. If the drive cannot measure the CEMF (this is where the plot picks up) it sends current pulses to the motor in an attempt to excite the motor allowing the drive to detect the speed of the motor. This usually happens only at very low speeds. Once the drive has detected the motor it accelerates to the commanded speed.

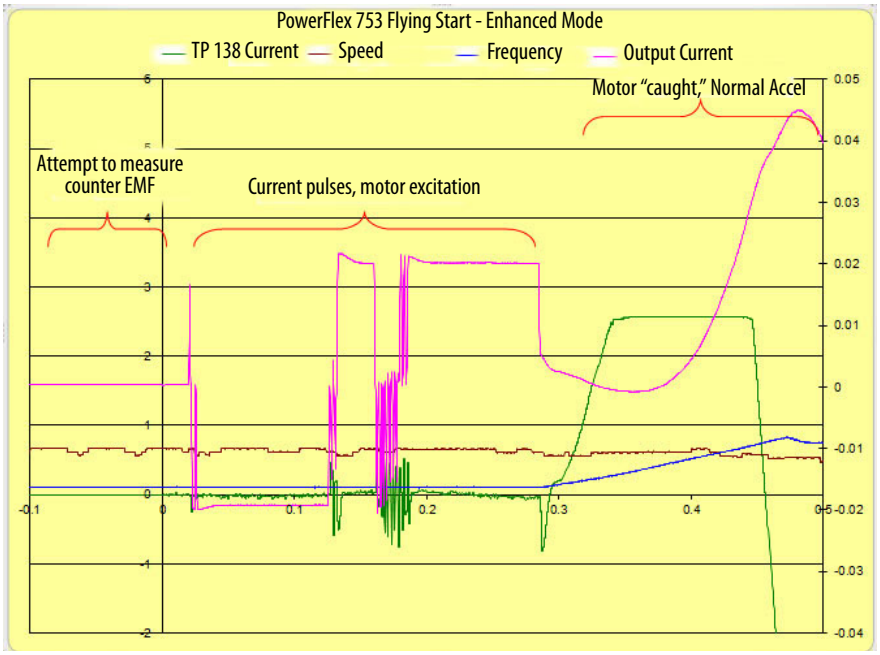

Flying Start - Enhanced Mode Reverse

Here is a motor spinning in the opposite direction of the commanded speed. In Enhanced mode the detection takes a very short time and the motor is controlled to zero speed and accelerated to the commanded speed.

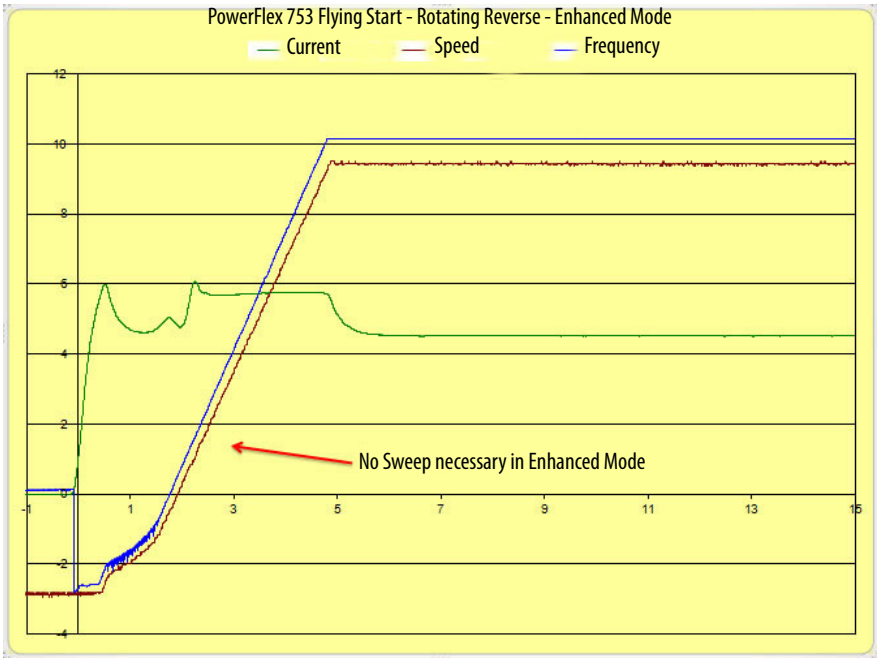

P357 [FS Gain]
Sweep mode - The amount of time the detection signal (current) must be below the setpoint. A very short time entered could cause false detections. Too long of a time and detection could be missed.

Enhanced mode - It's the Kp in the current regulator used in the detection process. Used along with P358.

P358 [FS Ki]
Sweep mode - Integral term in voltage recovery, indirectly connected to time; higher value can shorten recovery time but can cause unstable operation.

Enhanced mode - It's the Ki in the current regulator used in the detection process. Used along with P357.

P359 [FS Speed Reg Ki]
Sweep mode - The amount of time to sweep the frequency. A short time entered produces a steep slope on the frequency. A higher value (longer time) produces a flatter frequency sweep. Shown above.

Enhanced mode - It's the Ki in the speed regulator used in the detection process. Used along with P358.

P360 [FS Speed Reg Kp]
Sweep mode - Sets level the current must drop below. A larger value requires less change in current to indicate detection.

Enhanced mode - It's the Kp in the speed regulator used in the detection process. Used along with P357.

P361 [FS Excitation Ki]
Sweep mode - Integral term used to control the initial output voltage

Enhanced mode - Integral term used in the current regulator, which controls the motor excitation if the detection process deemed it necessary to excite the motor.

P362 [FS Excitation Kp]
Sweep mode - Proportional term used to control the initial output voltage

Enhanced mode - Proportional term used in the current regulator, which controls the motor excitation if the detection process deemed it necessary to excite the motor.

P363 [FS Reconnect Dly]
Delay time used between the issued start command and the start of the reconnect function. This is mainly used for power loss situations so the restart doesn't occur too quickly causing possible faults.

P364 [FS Msrmnt CurLvl]
There are two different measurement methods used when in Enhanced mode. If this parameter is set to zero the second method is cancelled and reconnect is attempted after the first measurement. Any other level change in this parameter could help the second measurement routine. Usually a higher number helps more.

Cooling Tower Fans Application Example

In some applications, such as large fans, wind or drafts can rotate the fan in the reverse direction when the drive is stopped. If the drive were started in the normal manner, its output begins at zero Hz, acting as a brake to bring the reverse rotating fan to a stop and then accelerating it in the correct direction. This operation can be very hard on the mechanics of the system including fans, belts and other coupling devices.

Draft/wind blows idle fans in reverse direction. Restarting at zero speed and accelerating damages fans and could break belts. Flying start alleviates the problem.

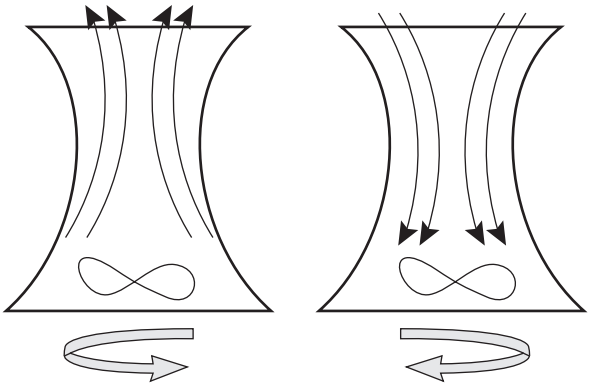

There could be occasions when the sweep as well as the CEMF detection fails at low speeds. This is due to the low levels of motor detection signals. It has been discovered that Sweep mode is more successful in these cases than Enhanced mode.

When in Sweep mode the frequency is always swept in the direction of the commanded frequency first.

Motor detection at low speeds can be difficult. Rather than get a false detection, the sweep reverses at 3 Hz.

Hand-Off-Auto

Many legacy drive installations included a circuit (such as a Hand-Off-Auto switch) that provided 3-wire start and stop signals simultaneously to the drive. PowerFlex 750-Series drives do not start unless there is a full input cycle between the stop and start signals. P176 [DI HOA Start] adds a delay to the start signal, allowing the required time interval between the start and stop signals. This enables the use of a single 3-wire control circuit to start and stop the drive.

Hand-Off-Auto Start

If P161 [DI Start] and P176 [DI HOA Start] are both configured, a "DigIn Cfg B" alarm results. You cannot use both Digital Input Start and Digital Input Hand-Off-Auto Start at the same time.

Hand-Off-Auto Example

A Motor Control Cabinet has an Hand-Off-Auto switch wired as shown in the figure below.

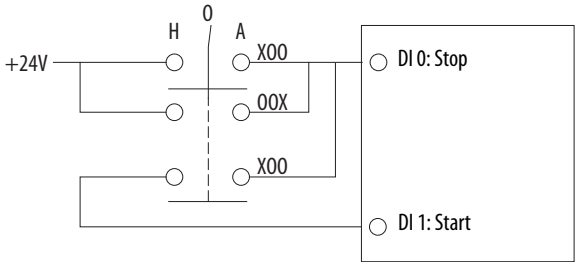

When the switch is turned to Off, the switch is open between the source and Stop (DI:0) and between Stop and Start (DI:1). This causes the drive to be in an asserted stop. When the switch is turned to Auto, the control signal reaches the Stop input but not the Start. The drive can be stopped and started by another location. When the switch is turned to Hand, both the Stop and Start ports are energized.

In order for the drive to start, the Stop signal must be received prior to the Start. With the wiring above, the signals are nearly simultaneous, too fast to be sure that the drive is ready to start. This causes the switch to either be unreliable or not work at all. This can be remedied by adding a time delay to the start signal. By changing Digital Input 1 from DI Start to DI Hand-Off-Auto Start, the drive

automatically adds this time delay and makes sure that the system is ready to start before it receives the command.

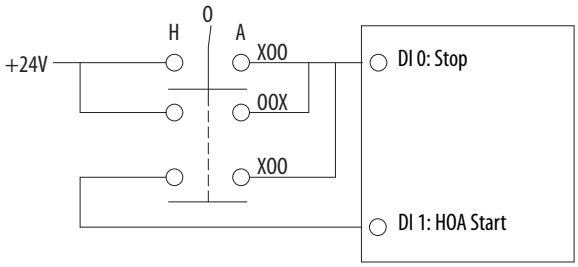

Using Hand-Off-Auto with Auto/Manual

To take control of the drive speed when switching from Auto to Hand on the H-O-A switch, the Auto/Manual feature can be used. See Auto/Manual on page 27 for more on Auto/Manual Control.

In the circuit below, a speed potentiometer was added to the analog input to provide a speed reference to the drive. When the H-O-A switch is moved from Auto to Hand, the digital input block requests manual control and issues a start command to the drive. If the digital input port receives manual control, the drive accelerates to the reference speed from the analog input. All attempts to change the speed except from the analog input are blocked. If the drive is stopped while in Hand, switch the H-O-A switch to Off and then back to Hand to restart the drive.

If another port has manual control of the drive, but does not have exclusive ownership of the logic commands (due to P326 [Manual Cmd Mask]), turning the switch to Hand causes the drive to begin moving but for the analog input to have no control over the speed.

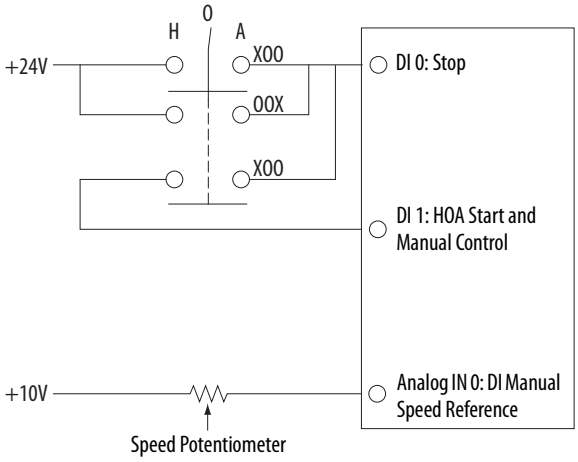

For this circuit, set the following parameters (P301 [Access Level] must be set to 1 "Advanced" to see P563 [DI ManRef Sel]).

Parameter No.	Parameter Name	Value
158	DI Stop	Digital Input 0
172	DI Manual Control	Digital Input 1
176	DI HOA Start	Digital Input 1
324	Logic Mask	xxxxxxxxxxxxxx1 (Digital In)
326	Manual Cmd Mask	xxxxxxxxxxxxxx1 (Digital In)
327	Manual Ref Mask	xxxxxxxxxxxxxx1 (Digital In)
563	DI Manual Reference Select	AnIg In0 Value

The drive requests Manual mode, starts and tracks the reference speed coming from the Analog Input when the H-O-A switches to Hand. (The HIM still reads Auto. This display changes only when the HIM has control of Manual mode).

Using Hand-Off-Auto with a Start Relay

The Hand-Off-Auto switch can also be wired to ability to start the drive through a separate start relay.

In the circuit below, the run relay closes the circuit to both the stop and start inputs when the H-O-A switch is in Auto. Using this option, the drive can be started only if the H-O-A switch is in Hand or in Auto and the Run Relay is energized. No network or HIM control of the drive is possible.

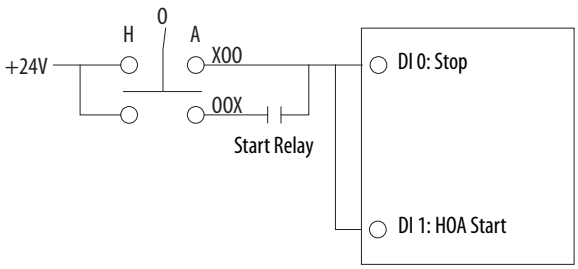

The above circuit can also be accomplished with a single digital input. Unlike P161 [DI Start], P176 [DI HOA Start] can share the same physical input with P158 [DI Stop]. The circuit can thus become the following.

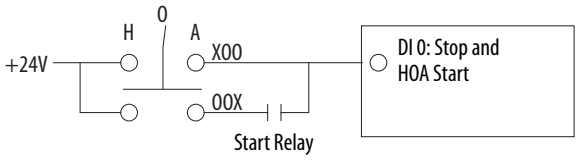

To use the H-O-A switch, the run relay and allow for network or HIM control, the circuit can be wired as in the figure below.

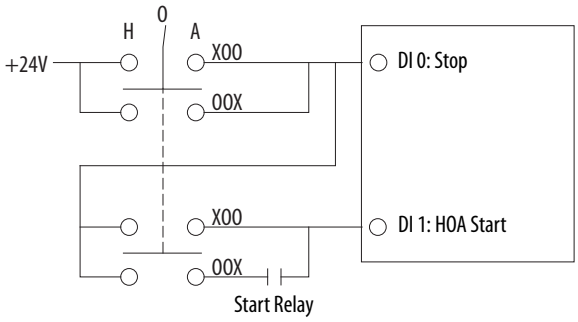

Here, the stop input is high when the H-O-A switch is in the Hand or Auto position. This eliminates the asserted stop caused when the stop input is low, allowing for the drive to be started from several sources when the H-O-A switch is in the Auto position.

Masks

A mask is a parameter that contains one bit for each of the possible ports for the respective PowerFlex 750-Series drive. Each bit acts like a valve for issued commands. Closing the valve (setting a bit value to 0) stops the command from reaching the drive. Opening the valve (setting a bit value to 1) lets the command pass through the mask into the drive.

Table 6 - Mask Parameters and Functions

Parameter No.	Parameter Name	Description
222	Dig In Filt Mask(1)	Digital Input Filter Mask. Filters the selected digital input.
324	Logic Mask	Enables/disables ports to control the logic command (such as start and direction). Does not mask Stop commands.
325	Auto Mask	Enables/disables ports to control the logic command (such as start and direction), while in Auto mode. Does not mask Stop commands.
326	Manual Cmd Mask	Enables/disables ports to control the logic command (such as start and direction), while in Manual mode. Does not mask Stop commands.
327	Manual Ref Mask	Enables/disables ports to control the speed reference while in Manual mode. When a port is commanding Manual mode, the reference is forced to the commanding port if the respective bit in this parameter is set. If an alternate speed reference source is desired, use P328 [Alt Man Ref Sel] to select the source.
885	Port Mask Act(2)	Active status for port communication. Bit 15 “Security” determines if network security is controlling the logic mask instead of this parameter.
886	Logic Mask Act(2)	Active status of the logic mask for ports. Bit 15 “Security” determines if network security is controlling the logic mask instead of this parameter.

Parameter No.	Parameter Name	Description
887	Write Mask Act(2)	Active status of write access for ports. Bit 15 "Security" determines if network security is controlling the write mask instead of this parameter.
888	Write Mask Cfg	Enables/disables write access (parameters, links, and so forth.) for DPI ports. Changes to this parameter become effective only when power is cycled, the drive is reset or Bit 15 of P887 [Write Mask Actv], transitions from "1" to "0."
2	Dig In Filt Mask(3)	Digital Input Filter Mask. Filters the selected digital input.

(1) Used only by the PowerFlex 753 main control board.
(2) Read only parameter.
(3) Used only by I/O Module models 20-750-2263C-1R2T and 20-750-2262C-2R. (Modules with 24V DC inputs.)

The individual bits for each parameter are as follows.

Table 7 - Mask Parameters with Bit Designations

	P222 [Dig In Filt Mask] (1)	P324 [Logic Mask]	P325 [Auto Mask]	P326 [Manual Cmd Mask]	P327 [Manual Ref Mask]	P885 [Port Mask Act]	P886 [Logic Mask Act]	P887 [Write Mask Act]	P888 [Write Mask Cfg]	P2 [Dig In Filt Mask](4)
Bit 0	Reserved	Digital In	Digital In	Digital In	Digital In	Digital In	Digital In	Reserved	Reserved	Input 0
Bit 1	Input 1	Port 1	Port 1	Port 1	Port 1	Port 1	Port 1	Port 1	Port 1	Input 1
Bit 2	Input 2	Port 2	Port 2	Port 2	Port 2	Port 2	Port 2	Port 2	Port 2	Input 2
Bit 3	Reserved	Port 3	Port 3	Port 3	Port 3	Port 3	Port 3	Port 3	Port 3	Input 3
Bit 4	Reserved	Port 4	Port 4	Port 4	Port 4	Port 4	Port 4	Port 4	Port 4	Input 4
Bit 5	Reserved	Port 5	Port 5	Port 5	Port 5	Port 5	Port 5	Port 5	Port 5	Input 5
Bit 6	Reserved	Port 6	Port 6	Port 6	Port 6	Port 6	Port 6	Port 6	Port 6	Reserved
Bit 7	Reserved	Port 7	Reserved	Reserved	Reserved	Port 7	Reserved	Port 7	Port 7	Reserved
Bit 8	Reserved	Port 8	Reserved	Reserved	Reserved	Port 8	Reserved	Port 8	Port 8	Reserved
Bit 9	Reserved	Port 9	Reserved	Reserved	Reserved	Port 9	Reserved	Port 9	Port 9	Reserved
Bit 10	Reserved	Port 10(2)	Reserved	Reserved	Reserved	Port 10(2)	Reserved	Port 10(2)	Port 10(2)	Reserved
Bit 11	Reserved	Port 11(2)	Reserved	Reserved	Reserved	Port 11(2)	Reserved	Port 11(2)	Port 11(2)	Reserved
Bit 12	Reserved	Reserved	Reserved	Reserved	Reserved	Reserved	Reserved	Reserved	Reserved	Reserved
Bit 13	Reserved	Port 13(3)	Port 13(3)	Port 13(3)	Port 13(3)	Port 13(3)	Port 13(3)	Port 13(3)	Port 13(3)	Reserved
Bit 14	Reserved	Port 14	Port 14	Port 14	Port 14	Port 14	Port 14	Port 14	Port 14	Reserved
Bit 15	Reserved	Reserved	Reserved	Reserved	Reserved	Security	Security	Security	Security	Reserved

(1) Used only by the PowerFlex 753 main control board.
(2) PowerFlex 755 Frame 8 drives and larger only.
(3) PowerFlex 755 drives only.
(4) Used only by I/O Module models 20-750-2263C-1R2T and 20-750-2262C-2R. (Modules with 24V DC inputs.)

Example

A PowerFlex 755 drive is controlled via the embedded ethernet (Port 13) remotely by a PLC. Normal operation prevents any type of control from being issued from the remote HIM (Port 2). However, the ability to manually control the drive via the HIM is needed in some cases. To assure these two modes of control, masks are set as follows.

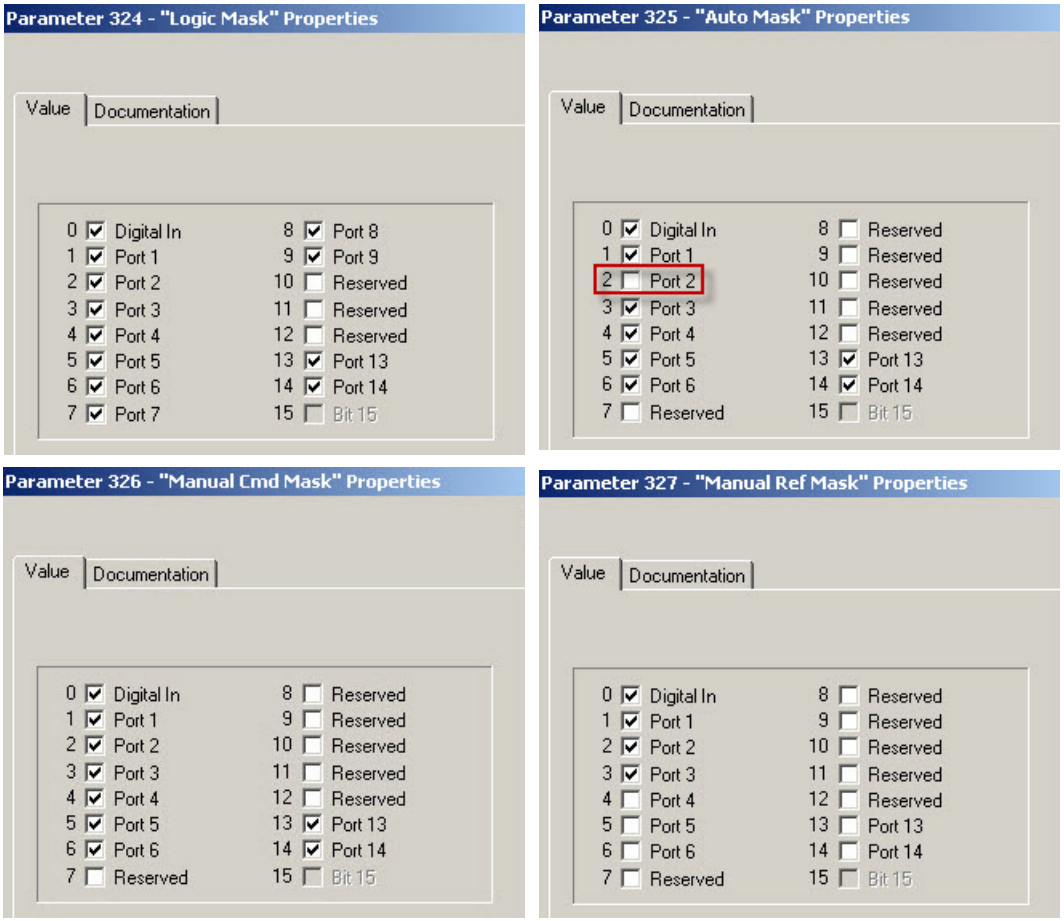

This masks out (disables) the remote HIM (Port 2) to control the logic command word (such as start, jog and direction) when the drive is in Auto mode and lets (enables) the HIM to control the logic command word when the drive is in Manual mode.

Owners

An owner is a parameter that contains one bit for each of the possible port adapters. The bits are set high (value of 1) when its adapter is currently issuing that command, and set low (Value of 0) when its adapter is not issuing that command.

Parameters and Functions

- P919 [Stop Owner] indicates which port is issuing a valid stop command.
- P920 [Start Owner] indicates which port is issuing a valid start command.
- P921 [Jog Owner] indicates which port is issuing a valid jog command.
- P922 [Dir Owner] indicates which port has exclusive control of direction command.
- P923 [Clear Flt Owner] indicates which port is currently clearing a fault.
- P924 [Manual Owner] indicates which port has requested manual control of all drive logic and reference functions.
- P925 [Ref Select Owner] indicates which port is issuing a valid reference select.

The bits for each parameter can be broken down as follows.

Options	Reserved	Port 14	Port 13 (1)	Reserved	Reserved	Reserved	Reserved	Reserved	Reserved	Port 6	Port 5	Port 4	Port 3	Port 2	Port 1	Digital In
Default	0	0	0	0	0	0	0	0	0	0	0	0	0	0	0	0
Bit	15	14	13	12	11	10	9	8	7	6	5	4	3	2	1	0

(1) 755 drives only.

Ownership falls into two categories.

Exclusive: Only one adapter at a time can issue the command and only one bit in the parameter is high.

Non Exclusive: Multiple adapters can simultaneously issue the same command and multiple bits can be high.

Some ownership must be exclusive; that is, only one adapter at a time can issue certain commands and claim ownership of that function. For example, it is not allowable to have one adapter command the drive to run in the forward direction while another adapter is issuing a command to make the drive run in reverse. Direction control ownership is exclusive.

Conversely, any number of adapters can simultaneously issue stop commands. Stop control ownership is not exclusive.

Ownership Example

The operator presses the HIM Stop button to stop the drive. When the operator attempts to restart the drive by pressing the HIM Start button, the drive does not restart. The operator needs to determine why the drive will not restart. The operator first views the Start Owner to see if the HIM is issuing a valid Start. When the start button on the HIM is pressed, a valid start is being issued as shown below.

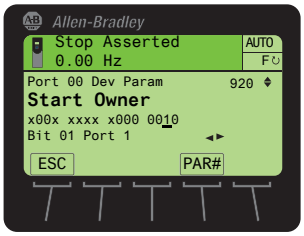

Because the start command is not maintained causing the drive to run, the operator views the Stop Owner. Note that the status bar on the HIM indicates that a stop has been asserted, but it does not indicate from which port the stop command is originating. Notice that bit 0 is a value of "1," indicating that the Stop device wired to the Digital Input terminal block is open, issuing a Stop command to the drive. Until this device is closed, a permanent Start Inhibit condition exists and the drive will not restart.

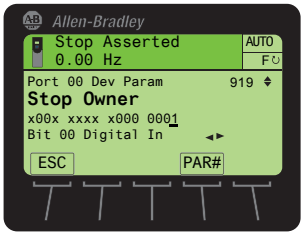

Power Loss

The drive contains a sophisticated algorithm to manage initial application of power as well as recovery from a partial power loss event. The drive also has programmable features that can minimize the problems associated with a loss of power in certain applications.

Terms and Definitions

Term	Definition
Vbus	The instantaneous DC bus voltage.
Vmem	The average DC bus voltage. A measure of the average bus voltage determined by heavily filtering bus voltage. Just after the pre-charge relay is closed during the initial power-up bus pre-charge, bus memory is set equal to bus voltage. Thereafter it is updated by ramping at a very slow rate toward Vbus. The filtered value ramps at 2.4V DC per minute (for a 480VAC drive). An increase in Vmem is blocked during deceleration to prevent a false high value due to the bus being pumped up by regeneration. Any change to Vmem is blocked during inertia ride through.
Vslew	The rate of change of Vmem in volts per minute.
Vrecover	The threshold for recovery from power loss.
Vtrigger	The threshold to detect power loss. The level is adjustable. The default is the value in the PowerFlex 750-Series Bus Level table. If "Pwr Loss Lvl" is selected as an input function AND energized, Vtrigger is set to Vmem minus [Pwr Loss Level]. Vopen is normally 60V DC below Vtrigger (in a 480VAC drive). Both Vopen and Vtrigger are limited to a minimum of Vmin. This is a factor only if [Pwr Loss Level] is set to a large value. **Important**: When using a value of P451/P454 [Pwr Loss A/B Level] that is larger than default, you must provide a minimum line impedance to limit inrush current when the power line recovers. Provide an input impedance that is equal to or greater than the equivalent of a 5% transformer with a VA rating 5 times the drive's input VA rating.
Vinertia	The software regulation reference for Vbus during inertia ride through.
Vclose	The threshold to close the pre-charge contactor.
Vopen	The threshold to open the pre-charge contactor.
Vmin	The minimum value of Vopen.
Voff	The bus voltage below which the switching power supply falls out of regulation.

Table 8 - PowerFlex 750-Series Bus Levels

Class	200/240V AC	400/480V AC	600/690V AC
Vslew	1.2V DC	2.4V DC	3.0V DC
Vrecover	Vmem – 30V	Vmem – 60V	Vmem – 75V
Vclose	Vmem – 60V	Vmem – 120V	Vmem – 150V
Vtrigger1,2	Vmem – 60V	Vmem – 120V	Vmem – 150V
Vtrigger1,3	Vmem – P451/P454 [Power Loss A/B Level]	Vmem – P451/P454 [Power Loss A/B Level]	Vmem – P451/P454 [Power Loss A/B Level]
Vopen	Vmem – P451/P454 [Power Loss A/B Level]	Vmem – P451/P454 [Power Loss A/B Level]	Vmem – P451/P454 [Power Loss A/B Level]
Vopen4	153V DC	305V DC	382V DC
Vmin	153V DC	305V DC	382V DC
Voff	–	200V DC	–

In the following diagram, the x-axis across the bottom indicates what the input voltage is into the drive and the y-axis indicates the corresponding DC Bus Voltage. Then the levels of each event are indicated in the graph. For example if I measure at the input of my drive, 450 volts - phase to phase, I find that voltage across the bottom. Now the various voltage levels can be derived according to that voltage level.

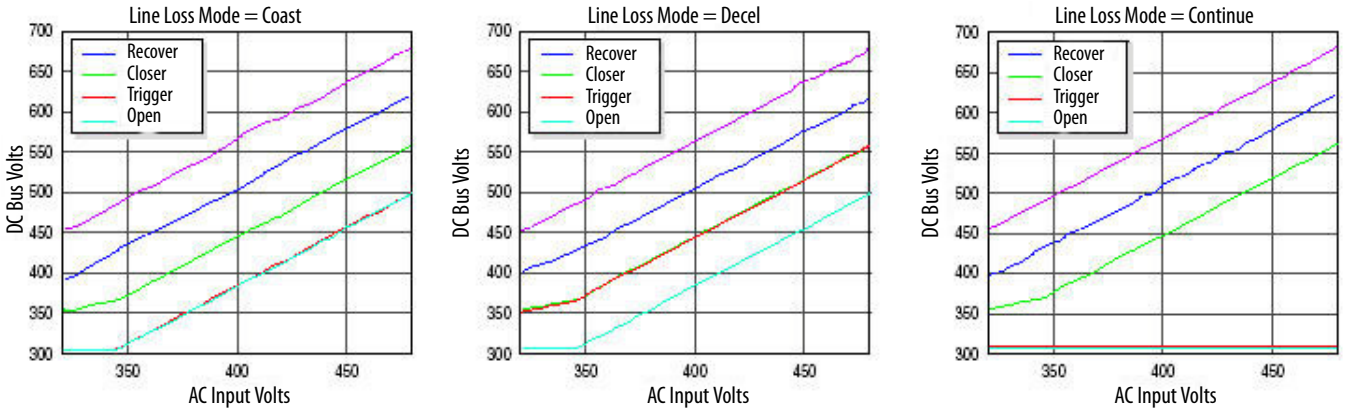

Restart after Power Recovery

If a power loss causes the drive to coast, and power recovers, the drive returns to powering the motor if it is in a Run Permit state. The drive is in a Run Permit state if the following is true:

- **3 Wire mode** - it is not faulted and if all Enable and Not Stop inputs are energized.
- **2 Wire mode** - it is not faulted and if all Enable, Not Stop, and Run inputs are energized.

Power Loss Modes

The drive is designed to operate at a nominal input voltage. When voltage falls below this nominal value by a significant amount, action can be taken to preserve the bus energy and keep the drive logic alive as long as possible. The drive has three methods of dealing with low bus voltages.

- "Coast" - Disable the drive and allow the motor to coast. (default)
- "Decel" - Decelerate the motor at a rate that regulates the DC bus until the load's kinetic energy can no longer power the drive.
- "Continue" - Allow the drive to power the motor down to 50% of the nominal DC bus voltage. When power loss occurs, P959 [Alarm Status A] Bit 0 turns on if the P449 [Power Loss Actn] is set to 1 "Alarm."

If the P449 [Power Loss Actn] is set to 3 "FltCoastStop," an F3 "Power Loss" fault occurs when the power loss event exceeds P452/455 [Pwr Loss A/B Time].

The drive faults with a F4 “UnderVoltage” fault if the bus voltage falls below Vmin and the P460 [UnderVltg Action] is set to 3 “FltCoastStop.”

The pre-charge relay opens if the bus voltage drops below Vopen and closes if the bus voltage rises above Vclose.

If the bus voltage rises above Vrecover for 20 ms, the drive determines the power loss is over. The power loss alarm is cleared.

If the drive is in a Run Permit state, the reconnect algorithm is run to match the speed of the motor. The drive then accelerates at the programmed rate to the set speed.

Coast

This is the default mode of operation. The drive determines a power loss has occurred if the bus voltage drops below Vtrigger. If the drive is running, the inverter output is disabled and the motor coasts.

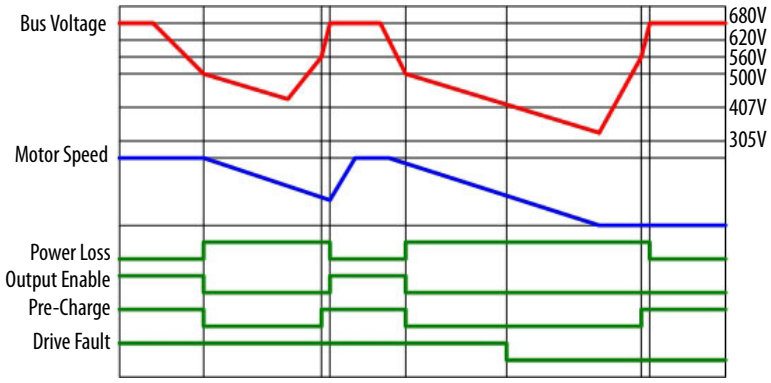

Decel

This mode of operation is useful if the mechanical load is high inertia and low friction. By recapturing the mechanical energy, converting it to electrical energy and returning it to the drive, the bus voltage is maintained. As long as there is mechanical energy, the ride through time is extended and the motor remains fully fluxed.

If AC input power is restored, the drive can ramp the motor to the correct speed without the need for reconnecting. The drive determines a power loss has occurred if the bus voltage drops below Vtrigger.

If the drive is running, the inertia ride through function is activated.

The load is decelerated at the correct rate so that the energy absorbed from the mechanical load regulates the DC bus to the value Vinertia.

The inverter output is disabled and the motor coasts if the output frequency drops to zero or if the bus voltage drops below Vopen or if any of the Run Permit inputs are de-energized.

If the drive is still in inertia ride through operation when power returns, the drive immediately accelerates at the programmed rate to the set speed. If the drive is coasting and it is in a Run Permit state, the reconnect algorithm is run to match the speed of the motor. The drive then accelerates at the programmed rate to the set speed.

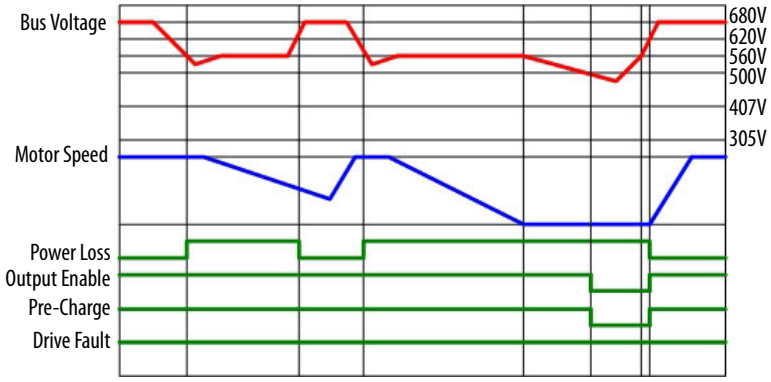

Continue

This mode provides the maximum power ride through. The input voltage can drop to 50% and the drive is still able to supply drive rated current (not drive rated power) to the motor.

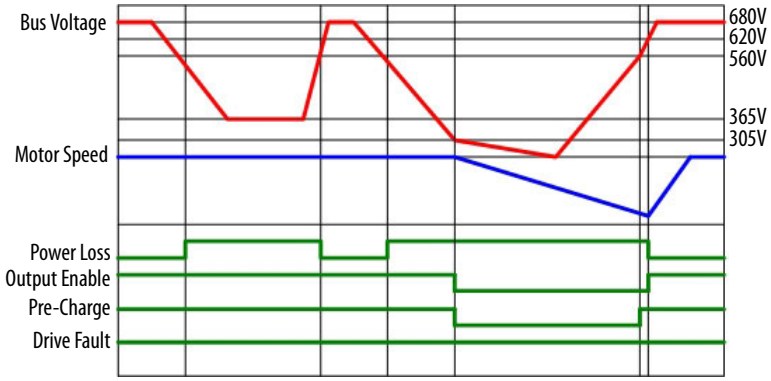

ATTENTION: To guard against drive damage, a minimum line impedance must be provided to limit inrush current when the power line recovers. Provide an input impedance that is equal to or greater than the equivalent of a 5% transformer with a VA rating 6 times the drive's input VA rating.

Drive damage can occur if proper input impedance is not provided as explained below. If the value for [Power Loss Level] is greater than 18% of [DC Bus Memory], you must provide a minimum line impedance to limit inrush current when the power line recovers. Provide input impedance that is equal to or greater than the equivalent of a 5% transformer with a VA rating 5 times the drives input VA rating.

Process PID Loop

The internal PID function provides closed loop process control with proportional and integral control action. The function is designed to be used in applications that require simple control of a process without the use of a separate stand-alone loop controller.

The PID function reads a process variable input to the drive and compares it to a desired setpoint stored in the drive. The algorithm then adjusts the output of the PID regulator, changing drive output frequency to attempt zero error between the process variable and the setpoint.

The Process PID can be used to modify the commanded speed or can be used to trim torque. There are two ways the PID Controller can be configured to modify the commanded speed.

- Speed Trim - The PID Output can be added to the master speed reference.
- Exclusive Control - PID can have exclusive control of the commanded speed.

The mode of operation between speed trim, exclusive control, and torque trim is selected in P1079 [PID Output Sel].

Speed Trim Mode

In this mode, the output of the PID regulator is summed with a master speed reference to control the process. This mode is appropriate when the process needs to be controlled tightly and in a stable manner by adding or subtracting small amounts directly to the output frequency (speed). In the following example, the master speed reference sets the wind/unwind speed and the dancer pot signal is used as a PID Feedback to control the tension in the system. An equilibrium point is programmed as PID Setpoint, and as the tension increases or decreases during winding, the master speed is trimmed to compensate and maintain tension near the equilibrium point.

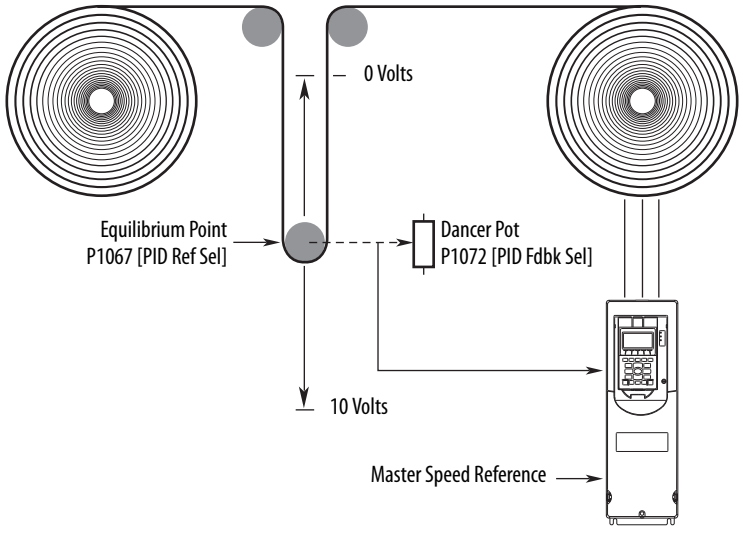

When the PID is disabled the commanded speed is the ramped speed reference.

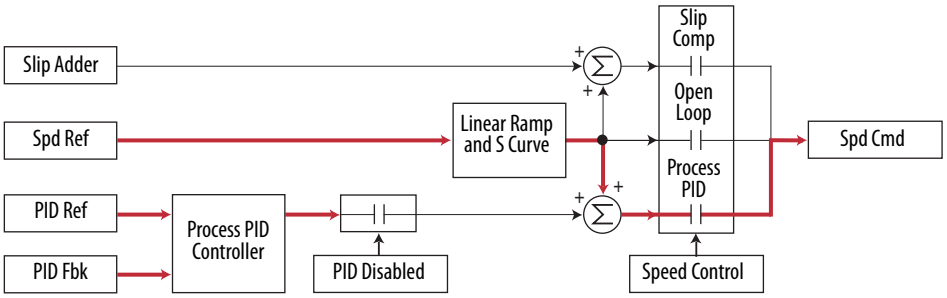

When the PID is enabled the output of the PID Controller is added to the ramped speed reference.

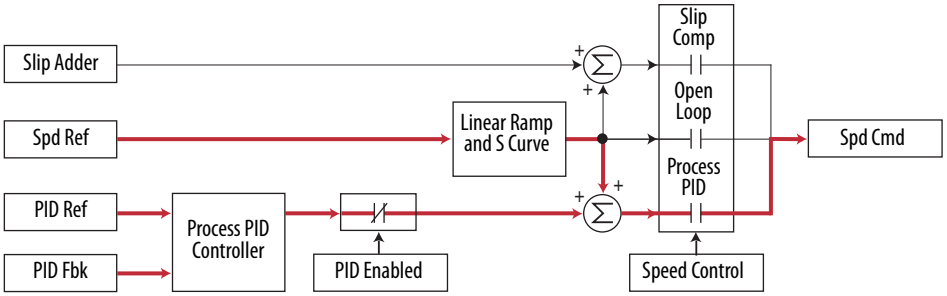

Exclusive Mode

In this mode, the output of PID regulator is the speed reference, and does not "trim" a master speed reference. This mode is appropriate when speed is unimportant and the only thing that matters is satisfying the control loop. In the pumping application example below, the reference or setpoint is the required pressure in the system. The input from the transducer is the PID feedback and changes as the pressure changes. The drive output frequency is then increased or decreased as needed to maintain system pressure regardless of flow changes. With

the drive turning the pump at the required speed, the pressure is maintained in the system.

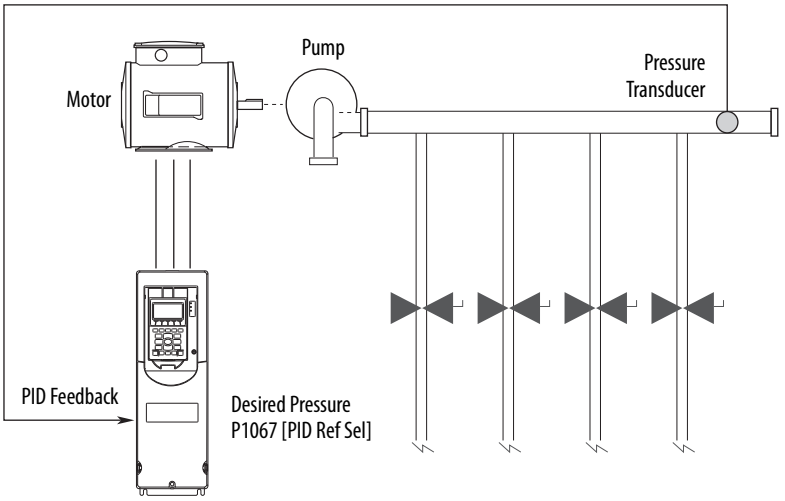

However, when additional valves in the system are opened and the pressure in the system drops, the PID error alters its output frequency to bring the process back into control. When the PID is disabled the commanded speed is the ramped speed reference.

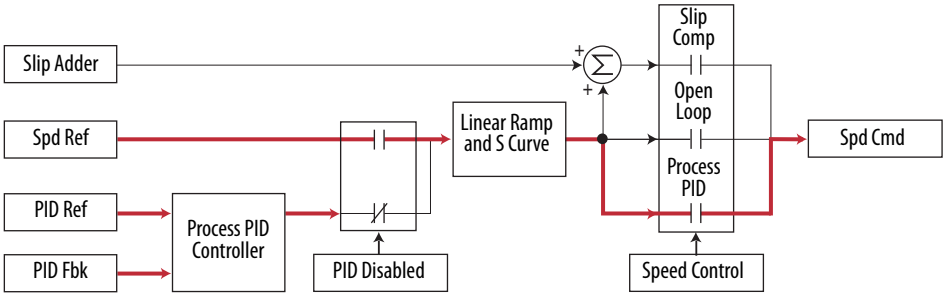

When the PID is enabled, the speed reference is disconnected and PID Output has exclusive control of the commanded speed, passing through the linear ramp and S curve.

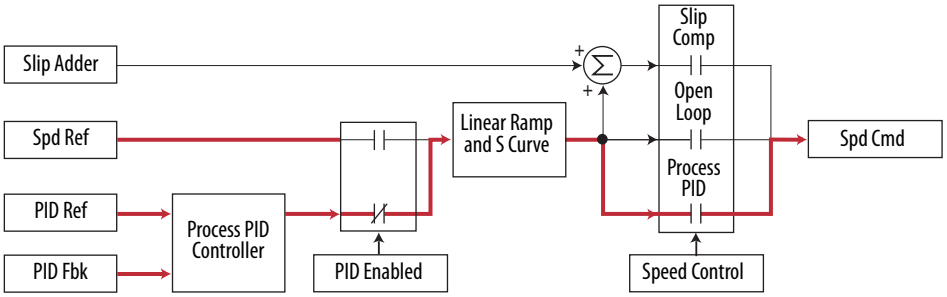

PID Output Select

Parameter 1079 [PID Output Sel]

- "Not Used" (0) - PID output is not applied to any speed reference.
- "Speed Excl" (1) - PID output is the only reference applied to the speed reference.
- "Speed Trim" (2) - PID output is applied to speed reference as a trim value. (Default)
- "Torque Excl" (3) - PID output is only reference applied to torque reference.
- "Torque Trim" (4) - PID output is applied to torque reference as a trim value.
- "Volt Excl" (5) - PID output is only reference applied to voltage reference.
- "Volt Trim" (6) - PID output is applied to voltage reference as a trim value.

PID Configuration

Parameter 1065[PI Cfg] is a set of bits that select various modes of operation. The value of this parameter can only be changed while the drive is stopped.

File	Group	No.	Display Name Full Name Description	Values	Read-Write	Data Type
APPLICATIONS	Process PID	1065	**PID Cfg** PID Configuration Main configuration of the Process PID controller.		RW	16-bit Integer

Options	Reserved	Reserved	Reserved	Reserved	Reserved	Reserved	Reserved	Reserved	Reserved	Percent Ref	Anti Windup	Stop Mode	Fdbk Sqrt	Zero Clamp	Ramp Ref	Preload Int
Default	0	0	0	0	0	0	0	0	0	0	0	0	0	0	0	0
Bit	15	14	13	12	11	10	9	8	7	6	5	4	3	2	1	0

0 = Disabled
1 = Enabled

PID Preload

This feature steps the PID Output to a preload value for better dynamic response when the PID Output is enabled. Refer to the diagram below. If PID is not enabled, the PID Integrator can be initialized to the PID Preload Value or the current value of the commanded speed. The operation of Preload is selected in the PID Configuration parameter. By default, Preload Command is off and the PID Load Value is zero, causing a zero to be loaded into the integrator when the PID is disabled. As shown in Diagram A below, when the PID is enabled the PID output starts from zero and regulates to the required level. When PID is enabled with PID Load Value is set to a non-zero value the output begins with a step as shown in Diagram B below. This can result in the PID reaching steady state

sooner, however if the step is too large the drive can go into current limit and extend the acceleration.

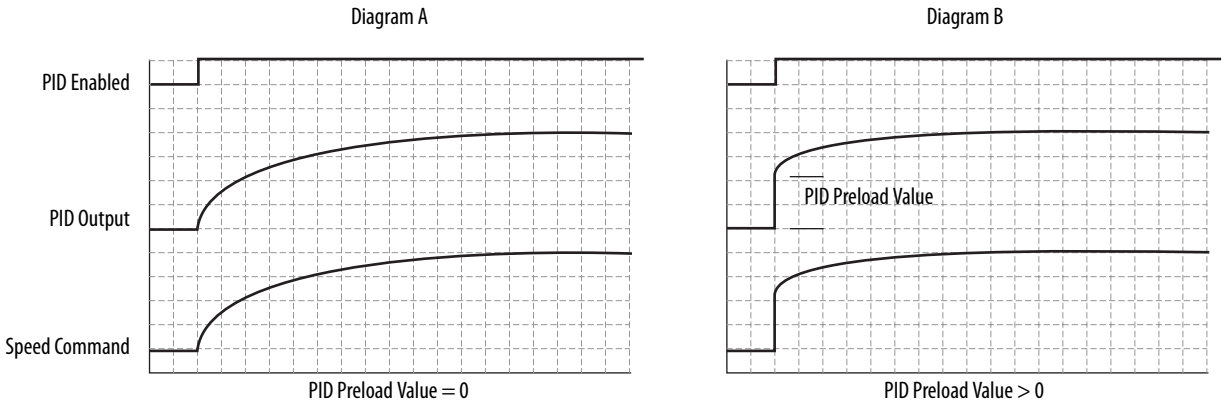

Preload command can be used when the PID has exclusive control of the commanded speed. With the integrator preset to the commanded speed there is no disturbance in commanded speed when PID is enabled. After PID is enabled the PID output is regulated to the required level.

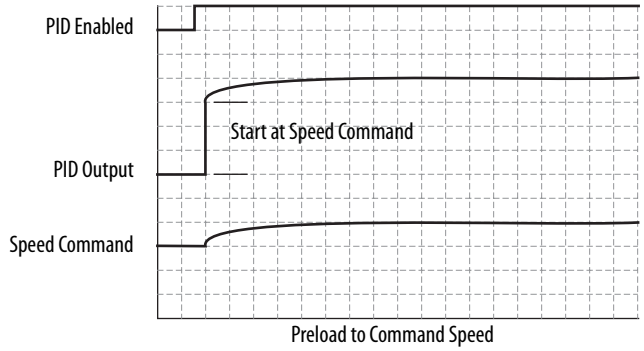

When the PID is configured to have exclusive control of the commanded speed and the drive is in current limit or voltage limit the integrator is preset to the commanded speed so that it knows where to resume when no longer in limit.

Ramp Ref

The PID Ramp Reference feature is used to provide a smooth transition when the PID is enabled and the PID output is used as a speed trim (not exclusive control). When PID Ramp Reference is selected in the PID Configuration parameter, and PID is disabled, the value used for the PID reference is the PID feedback. This causes the PID error to be zero. Then when the PID is enabled the value used for the PID reference ramps to the selected value for PID reference at the selected acceleration or deceleration rate. After the PID reference reaches the selected value the ramp is bypassed until the PID is disabled and enabled again. S-curve is not available as part of the PID linear ramp.

Zero Clamp

This feature limits the possible drive action to one direction only. Output from the drive is from zero to maximum frequency forward or zero to maximum frequency reverse. This removes the chance of doing a "plugging" type operation as an attempt to bring the error to zero. This bit is active only in trim mode.

The PID has the option to limit operation so that the output frequency always has the same sign as the master speed reference. The zero clamp option is selected in the PID Configuration parameter. Zero clamp is disabled when PID has exclusive control of speed command.

For example, if master speed reference is +10 Hz and the output of the PID results in a speed adder of –15 Hz, zero clamp limits the output frequency to not become less than zero. Likewise, if master speed reference is –10 Hz and the output of the PID results in a speed adder of +15 Hz, zero clamp limits the output frequency to not become greater than zero.

Feedback Square Root

This feature uses the square root of the feedback signal as the PID feedback. This is useful in processes that control pressure, because centrifugal fans and pumps vary pressure with the square of speed.

The PID has the option to take the square root of the selected feedback signal. This is used to linearize the feedback when the transducer produces the process variable squared. The result of the square root is normalized back to full scale to provide a consistent range of operation. The option to take the square root is selected in the PID configuration parameter.

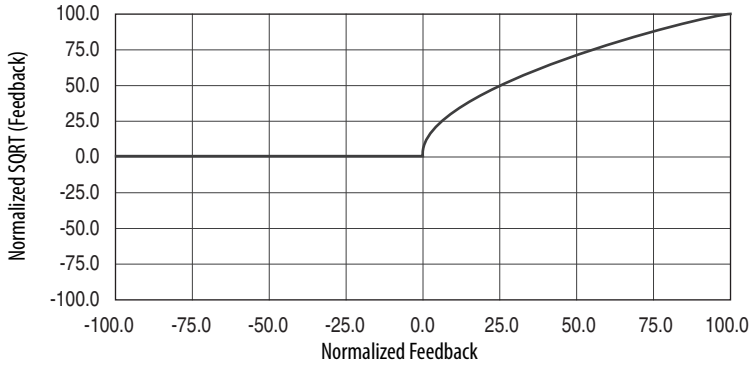

Stop Mode

When P370/371 [Stop Mode A/B] is set to 1 “Ramp” and a Stop command is issued to the drive, the PID loop continues to operate during the decel ramp until the PID output becomes more than the master reference. When set to 0 “Coast,” the drive disables PID and performs a normal stop. This bit is active in Trim mode only.

Anti-Wind Up

When P1065 [PID Cfg] Bit 5 “Anti Windup” is set to 1 “Enabled” the PID loop automatically prevents the integrator from creating an excessive error that could cause loop instability. The integrator is automatically controlled without the need for PID Reset or PID Hold inputs.

Percent Ref

When using Process PID control the output can be selected as percent of the Speed Reference. This works in Speed trim mode only, not in Torque Trim or Exclusive mode.

Examples

Percent Ref selected, Speed Reference = 43 Hz, PID Output = 10%, Maximum Frequency = 130 Hz. 4.3 Hz is added to the final speed reference.

Percent Ref not selected, Speed Reference = 43 Hz, PID Output = 10%, Maximum Frequency = 130 Hz. 13.0 Hz is added to the final speed reference.

PID Control

P1066 [PID Control] is a set of bits to dynamically enable and disable the operation of the process PID controller. When this parameter is interactively written to from a network it must be done through a data link so the values are not written to EEprom.

PID Enable

The PID loop can be enabled/disabled. The Enabled status of the PID loop determines when the PID regulator output is part or all of the commanded speed. The logic evaluated for the PID Enabled status is shown in the following ladder diagram.

The drive must be in Run before the PID Enabled status can turn on. The PID remains disabled when the drive is jogged. The PID is disabled when the drive begins a ramp to stop, except when it is in Trim mode and the Stop mode bit in P1065 [PID Cfg] is enabled.

When a digital input is configured as "PI Enable," the PID Enable bit of P1066 [PID Control] must be turned On for the PID loop to become enabled. If a digital input is not configured as "PI Enable" and the PID Enable bit in [PID Control] is turned On, then the PID loop can become enabled. If the PID Enable bit of [PID Control] is left continuously, then the PID can become enabled as soon as the drive goes into Run. If analog input signal loss is detected, the PID loop is disabled.

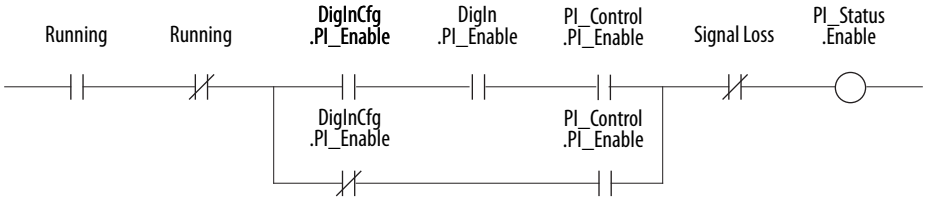

PID Hold

The Process PID Controller has the option to hold the integrator at the current value so if some part of the process is in limit the integrator maintains the present value to avoid windup in the integrator. The logic to hold the integrator at the current value is shown in the following ladder diagram. There are three conditions under which Hold turns on.

- If a digital input is configured to provide PID Hold and that digital input is turned on then the PID integrator stops changing. Note that when a digital input is configured to provide PID Hold that takes precedence over the PID control parameter.
- If a digital input is not configured to provide PID Hold and the PID Hold bit in the PID Control parameter is turned on the PID integrator stops changing.
- If the current limit or voltage limit is active then the PID is put into Hold.

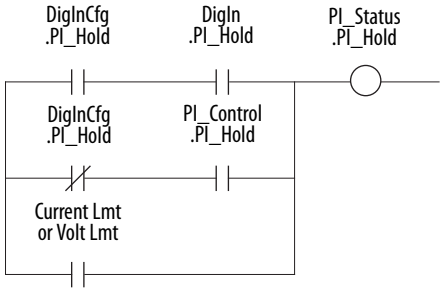

PI Reset

This feature holds the output of the integral function at zero. The term “anti windup” is often applied to similar features. It can be used for integrator preloading during transfer and can be used to hold the integrator at zero during “manual mode.”

For example a process whose feedback signal is below the reference point, creating error. The drive increases its output frequency in an attempt to bring the process into control. If, however, the increase in drive output does not zero the error, additional increases in output is commanded. When the drive reaches programmed Maximum Frequency, it is possible that a significant amount of integral value has been “built up” (windup). This can cause undesirable and sudden operation if the system were switched to manual operation and back. Resetting the integrator eliminates this windup.

Invert Error

This feature changes the “sign” of the error, creating a decrease in output for increasing error and an increase in output for decreasing error. An example of this is an HVAC system with thermostat control. In Summer, a rising thermostat reading commands an increase in drive output because cold air is being blown. In Winter, a falling thermostat commands an increase in drive output because warm air is being blown. The PID has the option to change the sign of PID Error. This is used when an increase in feedback needs to cause an increase in output. The option to invert the sign of PID Error is selected in the PID Configuration parameter.

PID Status

P1089 [PID Status] parameter is a set of bits that indicate the status of the process PID controller.

File	Group	No.	Display Name Full Name Description	Values	Read-Write	Data Type
APPLICATIONS	Process PID	1089	**PID Status** PID Status Status of the Process PI regulator.		RO	16-bit Integer

Options	Reserved	Reserved	Reserved	Reserved	Reserved	Reserved	Reserved	Reserved	Reserved	Reserved	Reserved	Reserved	PID In Limit	PID Reset	PID Hold	PID Enabled
Default	0	0	0	0	0	0	0	0	0	0	0	0	0	0	0	0
Bit	15	14	13	12	11	10	9	8	7	6	5	4	3	2	1	0

0 = Condition False
1 = Condition True

Bit 0 "PID Enable" – PID controller is enabled.
Bit 1 "PID Hold" – Hold PID integrator.
Bit 2 "PID Reset" – Reset PID integrator.
Bit 3 "PID In Limit" – PID in limit.

PID Reference and Feedback

The selection of the source for the reference signal is entered in P1067 [PID Ref Sel]. The selection of the source for the feedback signal is selected in P1072 [PID Fdbk Sel]. The reference and feedback have the same limit of possible options.

Options include DPI adapter ports, MOP, preset speeds, analog inputs, pulse input, encoder input and PID setpoint parameter.

The value used for reference is displayed in P1090 [PID Ref Meter] as a read only parameter. The value used for feedback is displayed in P1091 [PID Fdbk Meter] as a read only parameter. These displays are active independent of PID Enabled. Full scale is displayed as ±100.00%.

PID Reference and Feedback Scaling

The analog PID reference can be limited by using P1068 [PID Ref AnlgHi] and P1069 [PID Ref AnlgLo]. [PID Ref AnlgHi] determines the high value, in percent, for the analog PID reference. [PID Ref AnlgLo] determines the low value, in percent, for the PID reference.

The analog PID feedback can be limited by using P1068 [PID Ref AnlgHi] and P1069 [PID Ref AnlgLo]. [PID Ref AnlgHi] determines the high value, in percent, for the PID feedback. [PID Ref AnlgLo] determines the low value, in percent, for the PID feedback.

Example

Display P1090 [PID Ref Meter] and P1091 [PID Fdbk Meter] as positive and negative values. Feedback from our dancer comes into Analog Input 2 as a 0-10V DC signal.

- P1067 [PID Ref Sel] = 0 “PI Setpoint”
- P1070 [PID Setpoint] = 50%
- P1072 [PID Fdbk Sel] = 2 “Analog In 2"
- P1068 [PID Ref AnlgHi] = 100%
- P1069 [PID Ref AnlgLo] = –100%
- P1073 [PID Fdbk AnlgHi] = 100%
- P1074 [PID Fdbk AnlgLo] = 0%
- P61 [Anlg In1 Hi] = 10V
- P62 [Anlg In2 Lo] = 0V

PI Feedback Scaling

- P675 [Trq Ref A Sel] = “Analog In 1”
- P61 [Anlg In1 Hi] = 10V
- P62 [Anlg In2 Lo] = 0V
- P1073 [PID Fdbk AnlgHi] = 100%
- P1074 [PID Fdbk AnlgLo] = 0%

Now 5V corresponds to 50% on the PID Feedback, and we try to maintain a PID setpoint of 50% (5V).

PID Setpoint

This parameter can be used as an internal value for the setpoint or reference for the process. If P1067 [PID Ref Sel] points to this parameter, the value entered here becomes the equilibrium point for the process.

PID Error

The PID Error is then sent to the Proportional and Integral functions, which are summed together.

PID Error Filter P1084 [PID LP Filter BW] sets up a filter for the PID Error. This is useful in filtering out unwanted signal response, such as noise in the PID loop feedback signal. The filter is a Radians/Second low pass filter.

PID Gains

Parameters P1086 [PID Prop Gain], P1087 [PID Int Time], and P1088 [PID Deriv Time] determine the response of the PID.

Proportional control (P) adjusts output based on size of the error (larger error = proportionally larger correction). If the error is doubled, then the output of the proportional control is doubled. Conversely, if the error is cut in half then the output of the proportional output is cut in half. With only proportional control there is always an error, so the feedback and the reference are never equal. [PID Prop Gain] is unit less and defaults to 1.00 for unit gain. With [PID Prop Gain] set to 1.00 and PID Error at 1.00% the PID output is 1.00% of maximum frequency.

Integral control (I) adjusts the output based on the duration of the error. (The longer the error is present, the harder it tries to correct). The integral control by itself is a ramp output correction. This type of control gives a smoothing effect to the output and continues to integrate until zero error is achieved. By itself, integral control is slower than many applications require and therefore is combined with proportional control (PI). [PID Int Time] is entered in seconds. If [PID Int Time] is set to 2.0 seconds and PI Error is 100.00% the PI output integrates from 0 to 100.00% in 2.0 seconds.

Derivative Control (D) adjusts the output based on the rate of change of the error and, by itself, tends to be unstable. The faster that the error is changing, the larger change to the output. Derivative control is usually used in torque trim mode and is usually not needed in speed mode.

For example, winders using torque control rely on PD control not PI control. Also, P1084 [PID LP Filter BW] is useful in filtering out unwanted signal response in the PID loop. The filter is a Radians/Second low pass filter.

PID Lower and Upper Limits/Output Scaling

The output value produced by the PID is displayed as ±100% in P1093 [PID Output Meter].

P1082 [PID Lower Limit] and P1081 [PID Upper Limit] are set as a percentage. In exclusive or speed trim mode, they scale the PID Output to a percentage of P37 [Maximum Freq]. In torque trim mode, they scale the PID Output as a percentage of rated motor torque.

Example

Set the PID lower and Upper limits to ±10% with Maximum Frequency set to 100 Hz. This lets the PID loop adjust the output of the drive ±10 Hz.

P1081 [PID Upper Limit] must always be greater than P1082 [PID Lower Limit].

Once the drive has reached the programmed Lower and Upper PID limits, the integrator stops integrating and no further "windup" is possible.

PID Output Mult

P1080 [PID Output Mult] enables additional scaling of the PID loop output.

Example

The application is a velocity controlled winder. As the roll builds up, the output gain can be reduced to allow the dancer signal to be properly reacted to by the PID loop without changing tuning of the PID loop.

PID Deadband

P1083 [PID Deadband] conditions the PID reference. If the PID reference has undesired rapid changes, the deadband can help smooth out these transitions.

Reset Parameters to Factory Defaults

1. Access the Status Screen on the 20-HIM-A6 or 20-HIM-CS6 Human Interface Module.

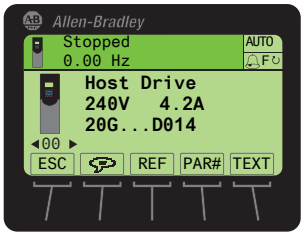

2. Use the left-right arrow keys to scroll to the port of the device whose parameters you want to set to factory defaults (for example, Port 00 for the Host Drive or the respective port number for the drive's connected peripherals).
3. Press the Folder key next to the green Start key to display its last-viewed folder.
4. Use the left-right arrow keys to scroll to the Memory folder.

5. Use the up-down arrow keys to select Set Defaults.

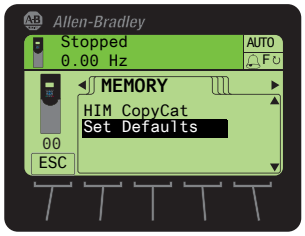

6. Press the Enter (5) key to display the Set Defaults screen.

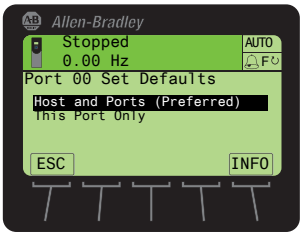

For Host Drive

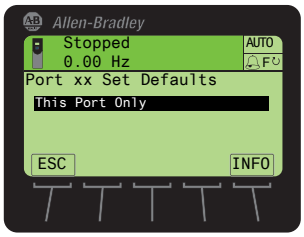

For Connected Peripheral

7. Use the up-down arrow keys select the appropriate action.
   - Host and Ports (Preferred): Selects the Host device and all ports for a factory default action.
   - This Port Only: Selects only this port for a factory default action. (For a description of a selected menu item, press the INFO soft key)
8. Press the Enter (5) key to display the warning pop-up box to reset defaults.

Host and Ports (preferred) Pop-up Box

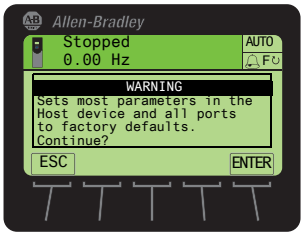

Press the ENTER *soft key* to affirm and set most parameters for the Host Drive and port devices to factory defaults. In this case, refer to the Host Drive and port device user manuals for the settings that will NOT be restored—or press the ESC *soft key* to cancel.

This Port Only Pop-up Box

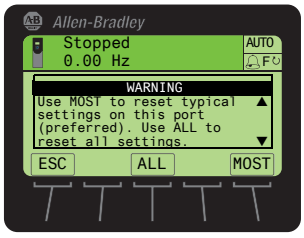

Press the MOST *soft key* to set MOST settings for the selected port device to factory defaults. In this case, refer to the Host Drive User Manual for the settings that will NOT be restored. Press the ALL *soft key* to set ALL settings for the selected port device to factory defaults—or press the ESC *soft key* to cancel.

A pop-up Fault warning display follows the parameter changes. This can be reset by pressing the clear soft key. And the following confirm pop-up box can be cleared by pressing the enter soft key. Pressing the escape key twice returns the display to the Status screen.

Refer to the PowerFlex 20-HIM-A6/-C6S HIM (Human Interface Module) User Manual, publication 20HIM-UM001, for further information on using the HIM and the resetting of parameters.

Sleep/Wake Mode

The purpose of the sleep/wake function is to Start (wake) the drive when an SleepWake RefSel signal is greater than or equal to the value in P354 [Wake Level], and Stop (sleep) the drive when an analog signal is less than or equal to the value in P352 [Sleep Level]. Setting P350 [Sleep Wake Mode] to 1 "Direct" enables the sleep/wake function to work as described.

An Invert mode also exists that changes the logic so that an analog value less than or equal to P354 [Wake Level] starts the drive and an SleepWake RefSel signal greater than or equal to P352 [Sleep Level] stops the drive.

Related Sleep/Wake parameters noted below.

Parameter No.	Parameter Name	Description
350	Sleep Wake Mode	Enables/disables the Sleep/Wake function.
351	SleepWake RefSel	Selects the source of the input controlling the sleep/wake function.
352	Sleep Level	Defines the SleepWake RefSel signal level that stops the drive.
353	Sleep Time	Defines the amount of time at or below 352 [Sleep Level] before a Stop is issued.
354	Wake Level	Defines the SleepWake RefSel signal level that starts the drive.
355	Wake Time	Defines the amount of time at or above 354 [Wake Level] before a Start is issued.

Sleep/Wake Operation

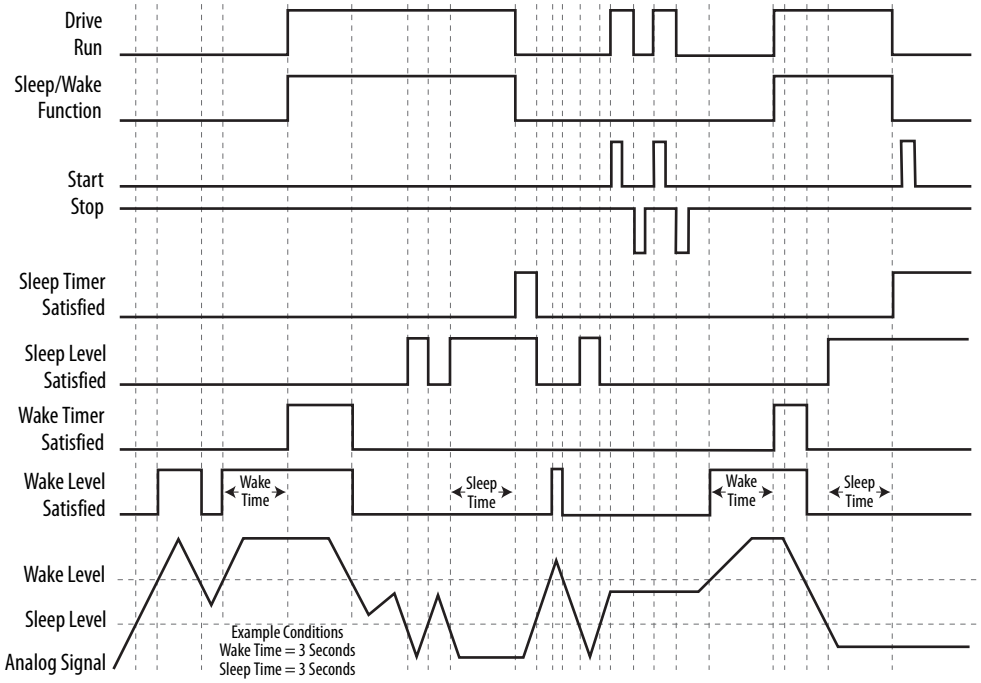

Requirements

In addition to enabling the sleep function with P350 [Sleep Wake Mode], the following conditions must be met:

- A proper value must be programmed for P352 [Sleep Level] and P354 [Wake Level].
- A sleep/wake reference must be selected in P351 [SleepWake RefSel].
- At least one of the following must be programmed (and input closed) in P155 [DI Enable], P158 [DI Stop], P163 [DI Run], P164 [DI Run Forward], or P165 [DI Run Reverse].

Conditions to Start/Restart



ATTENTION: Enabling the sleep/wake function can cause unexpected machine operation during the Wake mode. Equipment damage and/or personal injury can result if this parameter is used in an inappropriate application. Do not use this function without considering the Table 9 below and applicable local, national and international codes, standards, regulations or industry guidelines.

Table 9 - Conditions Required to Start Drive (1) (2) (3)

Input	After Powerup	After a Drive Fault		After a Stop Command
		Reset by HIM or Software "Stop"	Reset by HIM, Network/Software, or Digital Input "Clear Faults"	HIM, Network/Software or Digital Input "Stop"
Stop(4)	Stop Closed Wake Signal New Start or Run Command(5)	Stop Closed Wake Signal New Start or Run Command(5)	Stop Closed Wake Signal	Stop Closed Direct mode: SleepWake RefSel Signal > Sleep Level(7) Invert mode: SleepWake RefSel Signal < Sleep Level(8) New Start or Run Command(5)
Enable	Enable Closed Wake Signal	Enable Closed Wake Signal New Start or Run Command(5)	Enable Closed Wake Signal	Enable Closed Direct mode: SleepWake RefSel Signal > Sleep Level(7) Invert mode: SleepWake RefSel Signal < Sleep Level(8) New Start or Run Command(5)
Run Run Forward Run Reverse	Run Closed Wake Signal	New Run Command(6) Wake Signal	Run Closed Wake Signal	New Run Command Direct mode: SleepWake RefSel Signal > Sleep Level(7) Invert mode: SleepWake RefSel Signal < Sleep Level(8)

(1) When power is cycled, if all conditions are present after power is restored, restart occurs.
(2) If all conditions are present when [Sleep-Wake Mode] is "enabled," the drive starts.
(3) The active speed reference. The Sleep/Wake function and the speed reference can be assigned to the same input.
(4) Cannot use P159 [DI Cur Lmt Stop] or P160 [DI Coast Stop] as the only Stop Input. This causes the drive to go into a Sleep Cfg Alarm - Event No. 161.
(5) Command must be issued from HIM, TB or network.
(6) Run Command must be cycled.
(7) SleepWake Ref Sel signal does not need to be greater than the wake level.
(8) SleepWake Ref Sel signal does not need to be less than the wake level.

For Invert function, refer to the [Anlg In*n* LssActn] parameter.

Normal operation requires that P354 [Wake Level] be set greater than P352 [Sleep Level]. However, there are no limits that prevent the parameter settings from crossing, but the drive will not start until such settings are corrected. These levels are programmable while the drive is running. If P352 [Sleep Level] is made greater than P354 [Wake Level] while the drive is running, the drive continues to run as long as the P351 [SleepWake RefSel] signal remains at a level that doesn't trigger the sleep condition. P353 [Sleep Time] is also factored into this as well. Once the drive goes to sleep in this situation, it is not allowed to restart until the level settings are corrected (increase P354 [Wake Level], or decrease P352 [Sleep Level]). If however, the levels are corrected prior to the drive going to sleep, normal Sleep/Wake operation continues.

Timers

P353 [Sleep Time]
P355 [Wake Time]

Timers determine the length of time required for Sleep/Wake levels to produce true functions. These timers start counting when the Sleep/Wake levels are met and count in the opposite direction whenever respective level is not met. If the timer counts all the way to the user specified time, it creates an edge to toggle the Sleep/Wake function to the respective condition (sleep or wake). On powerup, timers are initialized to the state that does not permit a start condition. When the analog signal satisfies the level requirement, the timers start counting.

Interactive Functions

Separate start commands are also honored (including a digital input start), but only when the sleep timer is not satisfied. Once the sleep timer times out, the sleep function acts as a continuous stop. There are two exceptions that ignore the Sleep/Wake function.

1. When a device is commanding local control, that is HIM in Manual mode or a digital input programmed to P172 [DI Manual Ctrl].
2. When a jog command is being issued.

When a device is commanding local control, the port that is commanding it has exclusive start control (in addition to ref select), essentially overriding the Sleep/Wake function, and allowing the drive to run in the presence of a sleep situation. This holds true even for the case if digital input is programmed to P172 [DI Manual Ctrl], a digital input start or run is able to override a sleep situation.

Sleep/Wake Sources

The P351 [SleepWake RefSel] signal source for the sleep/wake function can be any analog input, whether it is being used for another function or not, a DeviceLogix software source (P90 [DLX Real OutSP1] thru P97 [DLX Real OutSP8]), or a valid numeric edit configuration. Configuring the sleep/wake source is done through P351 [SleepWake RefSel].

Also, [Anlg In*n* Hi] and [Anlg In*n* Lo] parameters have no effect on the function, however, the factory calibrated result, [Anlg In*n* Value] parameter, is used. In addition, the absolute value of the calibrated result is used, thus making the function useful for bipolar direction applications.

The analog in loss function, configured by the [Anlg In*n* LssActn] parameter, is unaffected and therefore operational with the sleep/wake function, but not tied to the sleep or wake levels and is triggered off the [Anlg In*n* Raw Value] parameter.

Refer to the PowerFlex 750-Series Programming Manual, publication 750-PM001, for more details.

Start Permissives

Start permissives are conditions required to permit the drive to start in any mode, such as run, jog, or auto-tune. When all permissive conditions are met, the drive is considered ready to start. The ready condition is confirmed through the ready status in P935 [Drive Status 1].

Permissive Conditions

- No faults can be active.
- No Type 2 alarms can be active.
- The DI Enable input, if configured, must be closed.
- The DC bus precharge logic must indicate it is a start permissive.
- All Stop inputs must be negated nor any drive functions are issuing a stop.
- No configuration changes (parameters being modified) can be in-progress.
- The drive's safety option module logic must be satisfied.

If a CIP Motion connection is active and if alignment is set to "Not Aligned" then the "CommutNotCfg" bit is high (on). To clear this start inhibit, from the Axis Properties within the Logix Designer application, run a Commutation Test, enter the proper value into the Offset and then set the Alignment to "Controller Offset."

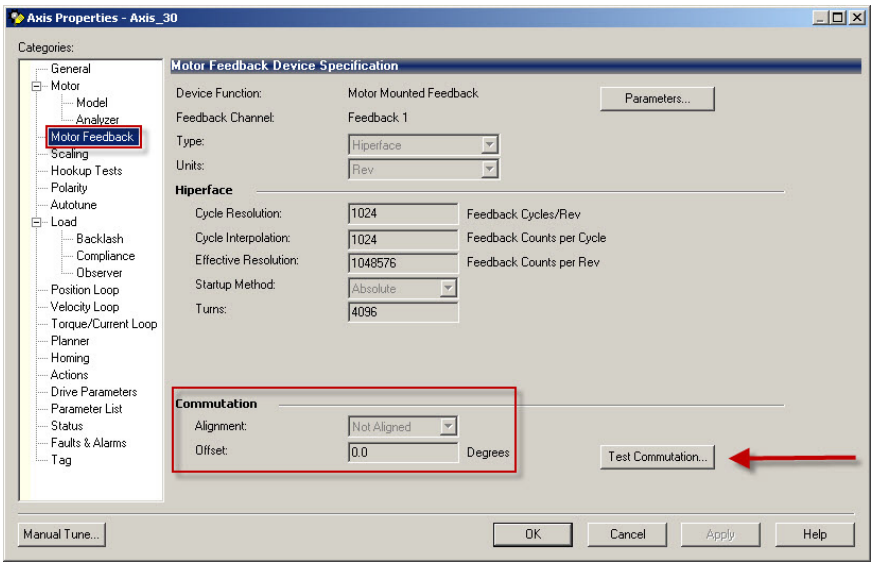

If all permissive conditions are met, a valid start, run or jog command starts the drive. The status of all current inhibit conditions are reflected in P933 [Start Inhibits] and the last inhibit conditions are reflected in P934 [Last StrtInhibit] details are shown below.

File	Group	No.	Display Name Full Name Description	Values	Read-Write	Data Type
DIAGNOSTICS	Status	933	**Start Inhibits** Start Inhibits Indicates which condition is preventing the drive from starting or running.		RO	32-bit Integer

Options	Reserved	Reserved	Reserved	Reserved	Reserved	Reserved	Reserved	Reserved	Reserved	Reserved	Reserved	Reserved	Reserved	Reserved	Reserved	Reserved	Reserved	Reserved	Reserved	Reserved	Reserved	CommutNotCfg	Profiler (1)	Sleep	Safety	Startup	Database	Stop	Precharge	Enable	Alarm	Faulted
Default	0	0	0	0	0	0	0	0	0	0	0	0	0	0	0	0	0	0	0	0	0	0	0	0	0	0	0	0	0	0	0	0
Bit	31	30	29	28	27	26	25	24	23	22	21	20	19	18	17	16	15	14	13	12	11	10	9	8	7	6	5	4	3	2	1	0

(1) PowerFlex 755 drives only.

0 = False, 1 = True

Bit 0 "Faulted" – Drive is in a faulted state. See P951 [Last Fault Code].
Bit 1 "Alarm" – A Type 2 alarm exists. See P961 [Type 2 Alarms].
Bit 2 "Enable" – An Enable input is open.
Bit 3 "Precharge" – Drive is in precharge. See P321 [Prchrg Control], P11 [DC Bus Volts].
Bit 4 "Stop" – Drive is receiving a stop signal. See P919 [Stop Owner].
Bit 5 "Database" – Database is performing a download operation.
Bit 6 "Startup" – Startup is active and preventing a start. Go to Start-Up Routine and abort.
Bit 7 "Safety" – Safety option module is preventing a start.
Bit 8 "Sleep" – Sleep function is issuing a stop. See P 350 [Sleep Wake Mode], P351 [SleepWake RefSel].
Bit 9 "Profiler" – Profiler function is issuing a stop. See P1210 [Profile Status].
Bit 10 "CommutNotCfg" – The associated PM motor commutation function has not been configured for use.

File	Group	No.	Display Name Full Name Description	Values	Read-Write	Data Type
DIAGNOSTICS	Status	934	**Last StrtInhibit** Last Start Inhibit Displays the Inhibit that prevented the last Start signal from starting the drive. Bits are cleared after the next successful start sequence. See parameter 933 [Start Inhibits] for bit descriptions.		RO	32-bit Integer

Options	Reserved	Reserved	Reserved	Reserved	Reserved	Reserved	Reserved	Reserved	Reserved	Reserved	Reserved	Reserved	Reserved	Reserved	Reserved	Reserved	Reserved	Reserved	Reserved	Reserved	Reserved	CommutNotCfg	Profilier	Sleep	Safety	Startup	Database	Stop	Precharge	Enable	Alarm	Faulted
Default	0	0	0	0	0	0	0	0	0	0	0	0	0	0	0	0	0	0	0	0	0	0	0	0	0	0	0	0	0	0	0	0
Bit	31	30	29	28	27	26	25	24	23	22	21	20	19	18	17	16	15	14	13	12	11	10	9	8	7	6	5	4	3	2	1	0

0 = False, 1 = True

Stop Modes

Stop Mode A/B can be configured as a method of stopping the drive when a stop command is given. A normal stop command and the run input changing from true to false results in a normal stop command. However, when using TorqueProve, P1100 [Trq Prove Cfg] with Bit 0 enabled, [Stop Mode A/B] must be set to 1 "Ramp."

P392 [Stop Dwell Time] can also be used with a stop command. This can be used to set an adjustable time between detecting zero speed and turning off the drive output.

The PowerFlex 750 series offers several methods for stopping a load. The stop method or mode is defined by parameters 370/371 [Stop Mode A/B] These modes include the following:

- Coast
- Ramp
- Ramp to Hold
- DC Brake
- DC Brake Auto Off
- Current Limit
- Fast Brake

Additionally, P388 [Flux Braking In] can be selected separately (not part of the Stop mode selection) to provide additional braking during a Stop command or when reducing the speed command. For Stop commands, this provides additional braking power during "Ramp" or "Ramp to Hold" selections only. If "Fast Brake" or "DC Brake" is used, "Flux Braking" is active only during speed changes (if enabled).

A "Ramp" selection always provides the fastest stopping time if a method to dissipate the required energy from the DC bus is provided (that is Dynamic Braking resistor, regenerative brake, and so forth.). The PowerFlex Dynamic Braking Selection Guide presented in Appendix A of the Reference Manual, explains Dynamic Braking in detail.

The alternative braking methods to external hardware brake requirements, can be enabled if the stopping time is not as restrictive. Each of these methods dissipates energy in the motor (use care to avoid motor overheating).

Braking Methods

Method	Use when application Requires	Braking Power
Coast	Power is removed from the motor and it coasts to zero speed	None
Ramp	The fastest stopping time or fastest ramp time for speed changes (external brake resistor or regenerative capability required for ramp times faster than the methods below). High duty cycles, frequent stops or speed changes. (The other methods can result in excessive motor heating).	The most
Ramp to Hold	Same as ramp above only when zero speed is reach the drive outputs a DC brake current to be sure the motor shaft doesn't move after it has stopped. This continues until the drive is started again.	Same as "Ramp"
DC Brake	DC braking is immediately applied (does not follow programmed decel ramp). May have to adjust P397 [DC Brake Kp].	Less than Ramp or Fast Brake
DCBrkAutoOff	Applies DC braking until zero speed is reached or DC brake time is reached, whichever is shorter.	Less than Ramp or Fast Brake
Current Lmt	Max torque / current applied until zero speed	Big Stuff
Fast Brake	High slip braking for maximum braking performance above base speed.	More than DC Brake / DC Brake Auto Off

Coast

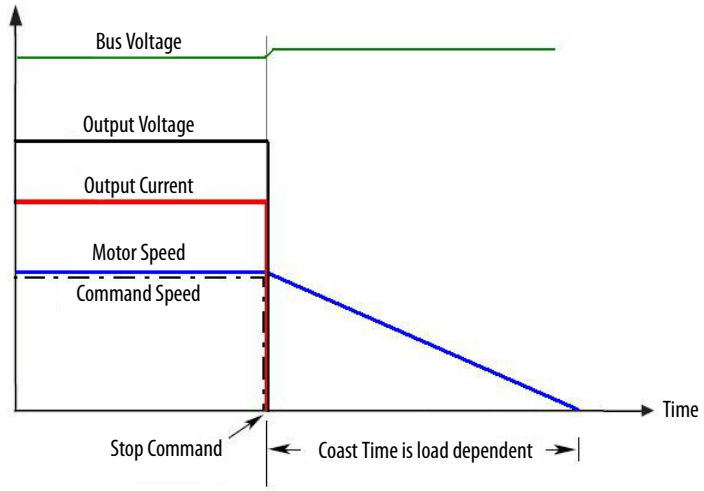

Coast is selected by setting P370/371 [Stop Mode A/B] to 0 "Coast." When in Coast to Stop, the drive acknowledges the Stop command by shutting off the output and releasing control of the motor. The load/motor will coast or free spin until the kinetic energy is dissipated.

- On Stop, the drive output goes immediately to zero (off).
- No further power is supplied to the motor. The drive has released control.
- The motor coasts for a time that is dependent on the mechanics of the system (Inertia, friction, and so forth).

DC Brake

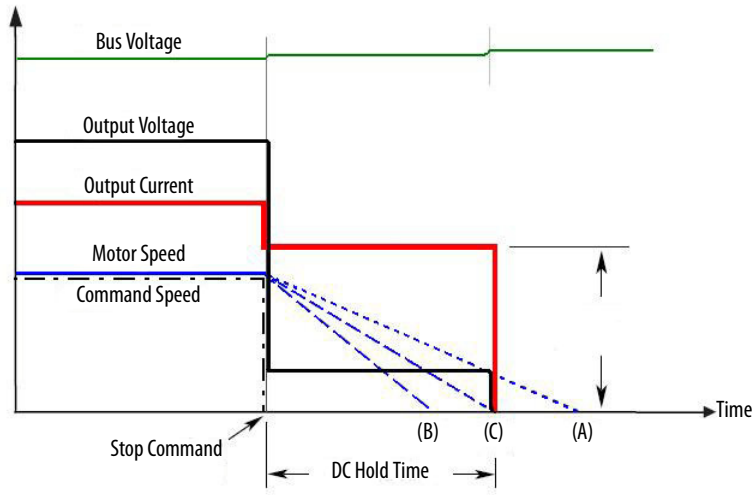

This method uses DC injection of the motor to Stop and/or hold the load. DC Brake is selected by setting P370/371 [Stop Mode A/B] to 3 "DC Brake." You can also choose the amount of time the braking is applied and the magnitude of the current used for braking with P395 [DC Brake Time] and P394 [DC Brake Level]. This mode of braking generates up to 40% of rated motor torque for braking and is typically used for low inertia loads with infrequent Stop cycles:

- On Stop, 3 phase drive output goes to zero (off).
- Drive outputs DC voltage on the last used phase to provide the current level programmed in P394 [DC Brake Level]. This voltage causes a stopping brake torque. If the voltage is applied for a time that is longer than the actual possible stopping time, the remaining time is used to attempt to hold the motor at zero speed (decel profile "B" on the diagram above).
- DC voltage to the motor continues for the amount of time programmed in P395 [DC BrakeTime]. Braking ceases after this time expires.
- After the DC Braking ceases, no further power is supplied to the motor. The motor/load may or may not be stopped. The drive has released control of the motor/load (decel profile "A" on the diagram above).
- The motor, if rotating, coasts from its present speed for a time that is dependent on the remaining kinetic energy and the mechanics of the system (inertia, friction, and so forth).
- Excess motor current and/or applied duration, could cause motor damage. Motor voltage can exist long after the Stop command is issued. The right combination of Brake Level and Brake Time must be determined to provide the safest, most efficient stop (decel profile "C" on the diagram above).

Ramp

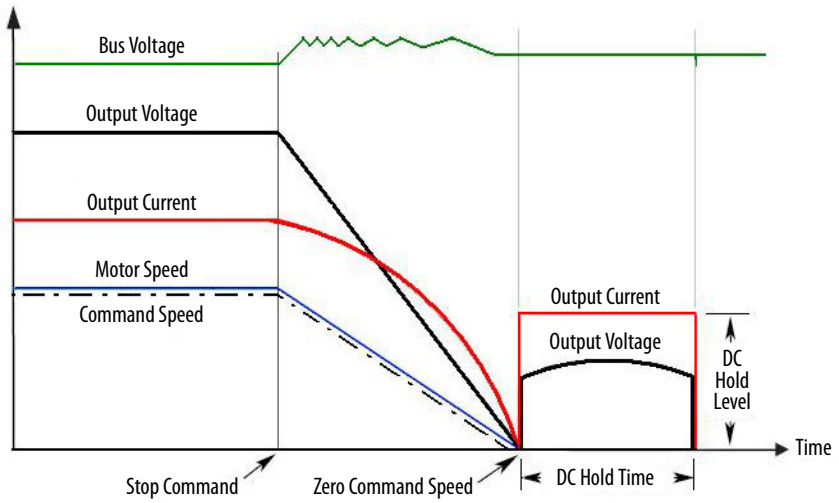

This method uses drive output reduction to stop the load.

Ramp To Stop is selected by setting parameters 370/371[Stop Mode A/B] to 1 "Ramp." The drive ramps the frequency to zero based on the deceleration time programmed into parameters 537/538 [Decel Time 1/2]. The normal mode of machine operation can utilize [Decel Time 1]. If the machine Stop requires a faster deceleration than desired for normal deceleration, [Decel Time 2] can be activated with a faster rate selected. When in Ramp mode, the drive acknowledges the Stop command by decreasing or ramping the output voltage and frequency to zero in a programmed period (Decel Time), maintaining control of the motor until the drive output reaches zero. The drive output is then shut off. The load/motor follows the decel ramp. Other factors such as bus regulation and current limit can alter the actual decel rate.

Ramp mode can also include a timed hold brake. Once the drive has reached zero output hertz on a Ramp-to-Stop and both parameters 395 [DC Brake Time] and P394 [DC Brake Level] are not zero, the drive applies DC to the motor producing current at the DC Brake Level for the DC Brake Time:

- On Stop, drive output decreases according to the programmed pattern from its present value to zero. The pattern can be linear or squared. The output decreases to zero at the rate determined by the programmed P520 [Max Fwd Speed] or P521 [Max Rev Speed] and the programmed active (Decel Time *n*).
- The reduction in output can be limited by other drive factors such as bus or current regulation.
- When the output reaches zero the output is shut off.
- The motor, if rotating, coasts from its present speed for a time that is dependent on the mechanics of the system (inertia, friction, and so forth).

Ramp to Hold

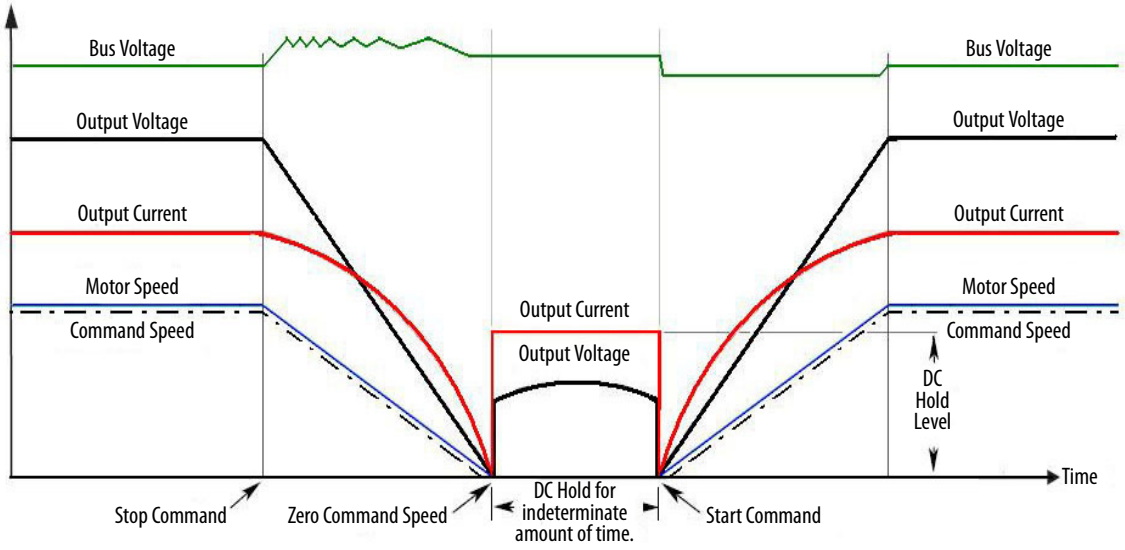

This method combines two of the methods above. It uses drive output reduction to stop the Load and DC injection to hold the load at zero speed once it has stopped:

- On Stop, drive output decreases according to the programmed pattern from its present value to zero. The pattern can be linear or squared. The output decreases to zero at the rate determined by the programmed P37 [Maximum Freq] and the programmed active P537/538 [Decel Time 1/2]
- The reduction in output can be limited by other drive factors such as bus or current regulation.
- When the output reaches zero 3 phase drive output goes to zero (off) and the drive outputs DC voltage on the last used phase to provide the current level programmed in P394 [DC Brake Level]. This voltage causes a holding brake torque.
- DC voltage to the motor continues until a Start command is reissued or the drive is disabled.
- If a Start command is reissued, DC Braking ceases and the drive returns to normal AC operation. If an Enable command is removed, the drive enters a Not Ready state until the enable is restored.

Fast Brake

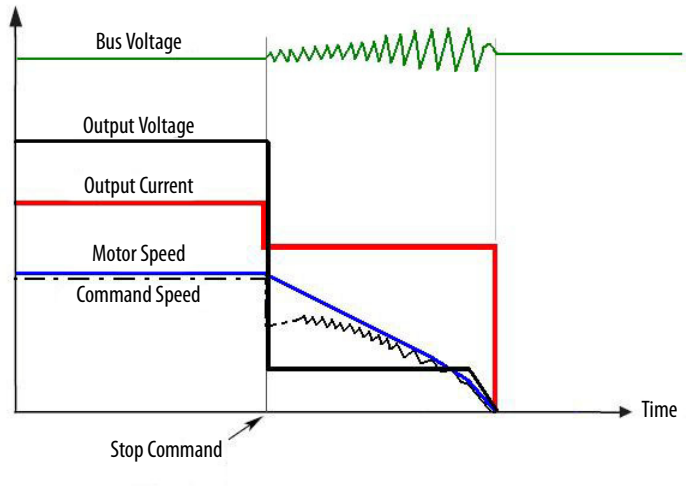

This method takes advantage of the characteristic of the induction motor whereby frequencies greater than zero (DC braking) can be applied to a spinning motor that provides more braking torque without causing the drive to regenerate:

- On Stop, the drive output decreases based on the motor speed, keeping the motor out of the regen region. This is accomplished by lowering the output frequency below the motor speed where regeneration does not occur. This causes excess energy to be lost in the motor.
- The method uses a PI based bus regulator to regulate the bus voltage to a reference (that is 750V) by automatically decreasing output frequency at the proper rate.
- When the frequency is decreased to a point where the motor no longer causes the bus voltage to increase, the frequency is forced to zero. DC brake is used to complete the stop if the DC Braking Time is non-zero, then the output is shut off.
- Use of the current regulator verifies that over current trips don't occur and allow for an easily adjustable and controllable level of braking torque.
- Use of the bus voltage regulator results in a smooth, continuous control of the frequency and forces the maximum allowable braking torque to be utilized at all times.

IMPORTANT	For this feature to function properly the active [Bus Reg Mode A/B] must be set to 1 "Adjust Freq" and **not** be 0 "Disabled."

Example

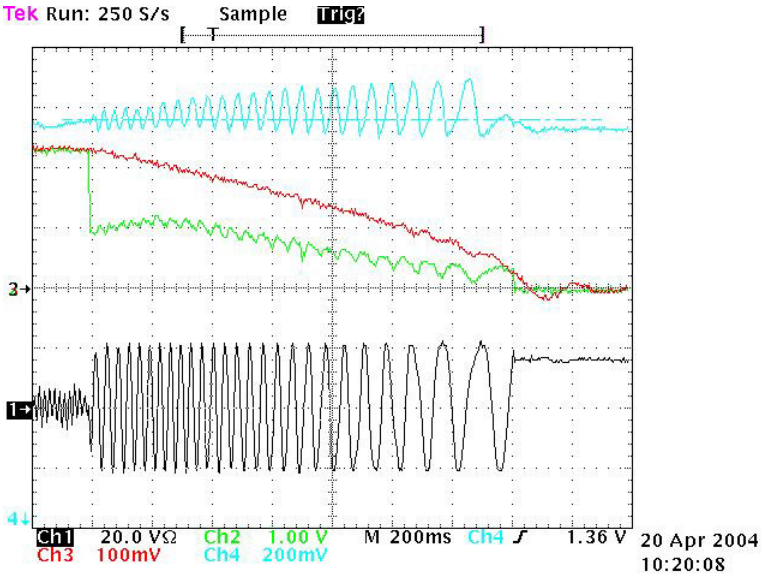

Block Diagram

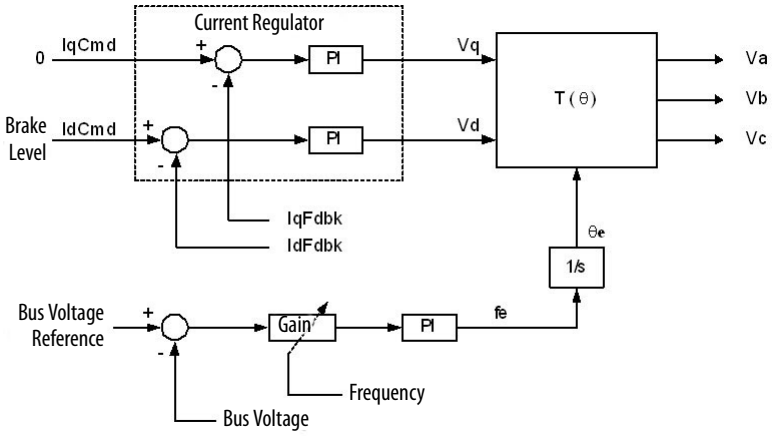

Current Limit Stop

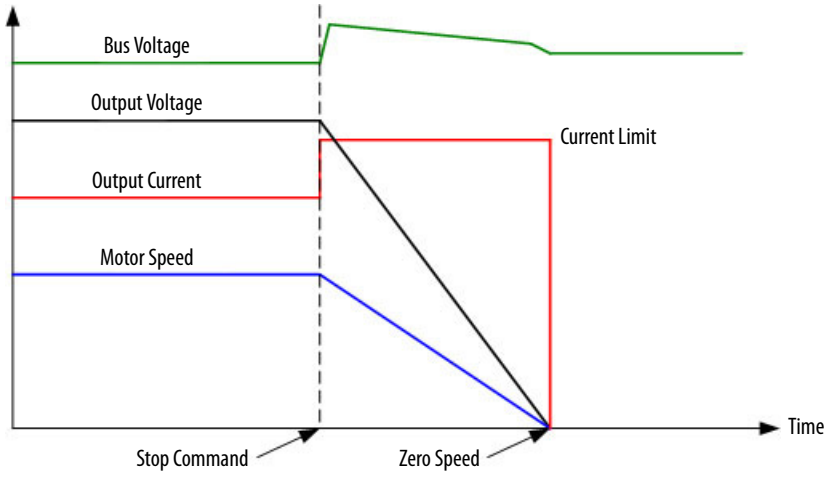

Current Limit stop is not typically set up as the normal Stop mode. Usually the normal stop is programmed at some ramp rate. For the current limit stop a digital input is used for the function. However, you certainly could set the normal stop as CurrentLimit Stop

Current limit stop ramp rate is 0.1 second and is not programmable

Example

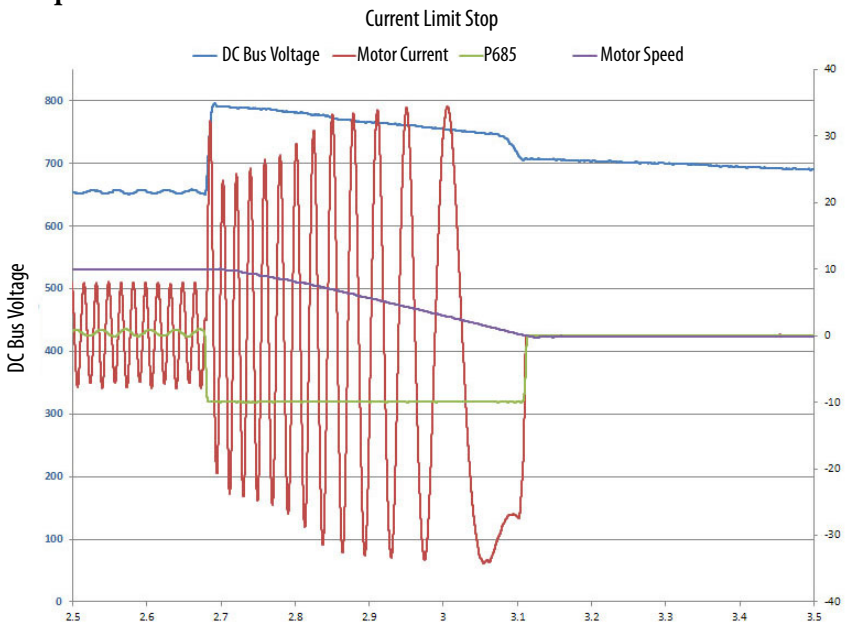

In this example the current limit was set high enough to allow the full rating of the drive to be used in the stop sequence.

Example

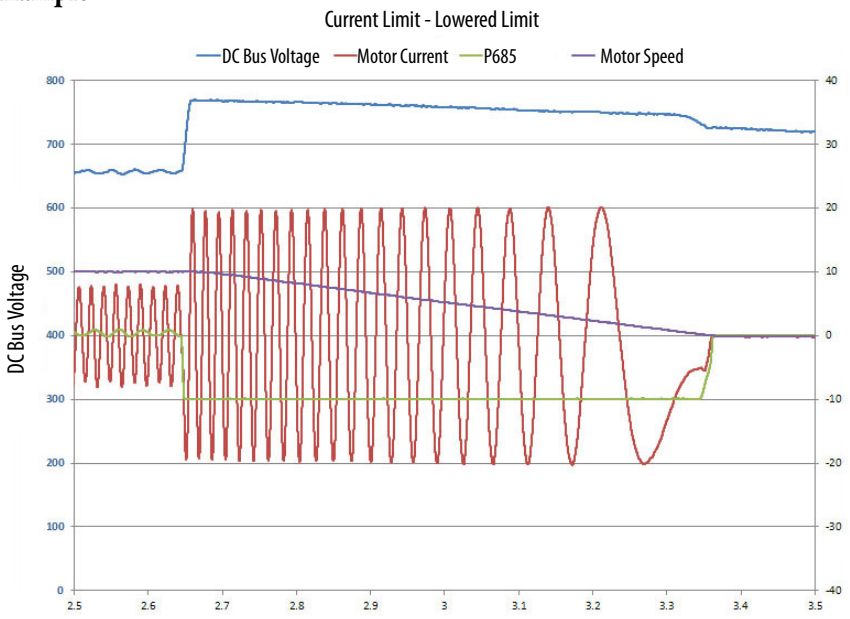

In this example the current limit was set at some value such that when the stop was issued the output current was clamped at that setting. Note the decel time is extended.

Voltage Class

PowerFlex drives are sometimes referred to by voltage class, which identifies the general input voltage to the drive. P305 [Voltage Class] includes a range of voltages. For example, a 400V class drive has an input voltage range of 380...480V AC. While the hardware remains the same for each class, other variables, such as factory defaults, catalog number, and power unit ratings change. In most cases the voltage of a drive can be reprogrammed to another value within the class by resetting the defaults to something other than factory settings.

P305 [Voltage Class], is required by the drive when parameter downloads occur and is generally not programmed individually. This parameter provides a "Low Voltage" and "High Voltage" setting. The default value is dependent upon the voltage that matches the catalog number (for example 400V or 480V). For example, a drive shipped as 400V (catalog code "C") has a default of "Low Voltage" for P305 [Voltage Class]. A drive shipped as 480V (catalog code "D") has a default of "High Voltage."

When a change is made to P305 [Voltage Class], the continuous current rating of the drive changes by an amount equal to the published difference between catalog numbers. With a change to the current rating, review P422 [Current Limit 1] and P423 [Current Limit 2].

Also note that a Reset to Defaults "All" resets the voltage to the original factory setting.

Feedback and I/O

Topic	Page
Analog Inputs	105
Analog Outputs	113
Digital Inputs	119
Digital Outputs	130
PTC Motor Thermistor Input	152

Analog Inputs

There are two analog inputs per I/O module. Up to four I/O modules can be mounted in the drive ports. See the PowerFlex 750-Series Installation Instructions, publication 750-IN001, for valid ports. Accessing the analog input parameters is done by selecting the port that the module is mounted in, then accessing the Analog Input group of parameters.

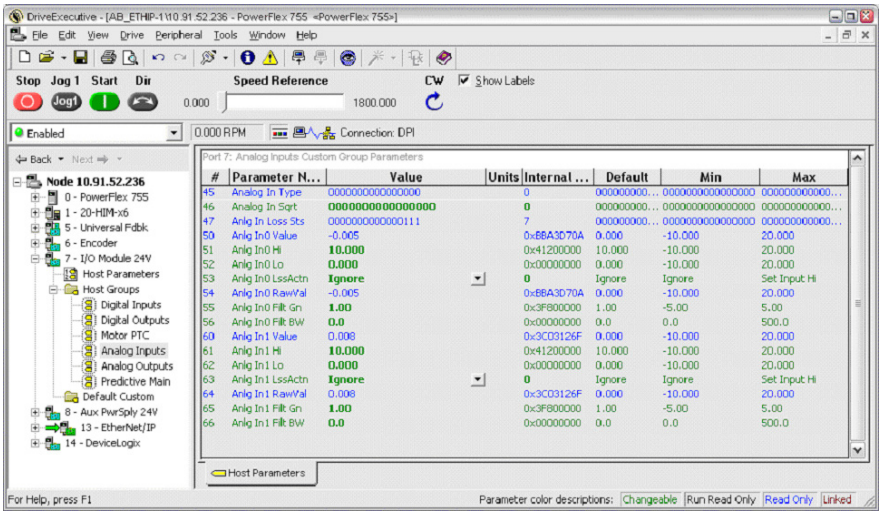

Analog Input Specifications

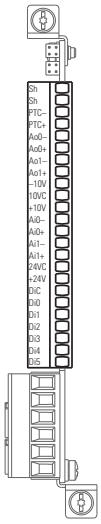

Terminal	Name	Description	Related Param [5]
Sh	Shield	Terminating point for wire shields when an EMC plate or conduit box is not installed.	
Sh			
Ptc–	Motor PTC (–)	Motor protection device (Positive Temperature Coefficient).	40 on Port X
Ptc+	Motor PTC (+)		
Ao0–	Analog Out 0 (–)	Bipolar, ±10V, 11 bit & sign, 2 k ohm minimum load. 4-20 mA, 11 bit & sign, 400 ohm maximum load.	75 on Port X
Ao0+	Analog Out 0 (+)		
Ao1–	Analog Out 1 (–)		85 on Port X
Ao1+	Analog Out 1 (+)		
–10V	–10 Volt Reference	2k ohm minimum.	
10VC	10 Volt Common	For (–) and (+) 10 Volt references.	
+10V	+10 Volt Reference	2k ohm minimum.	
Ai0–	Analog Input 0 (–)	Isolated [3], bipolar, differential, 11 bit & sign. Voltage mode: ±10V @ 88k ohm input impedance. Current mode: 0-20 mA @ 93 ohm input impedance.	50, 70 on Port X
Ai0+	Analog Input 0 (+)		
Ai1–	Analog Input 1 (–)		60, 70 on Port X
Ai1+	Analog Input 1 (+)		
24VC	24 Volt Common [1]	Drive supplied logic input power. 200 mA max per I/O module 600 mA max per drive	
+24V	+24 Volt DC [1]		
Di C	Digital Input Common	Common for Digital Inputs 0…5	
Di 0	Digital Input 0 [2]	24V DC - Opto isolated Low State: less than 5V DC High State: greater than 20V DC 11.2 mA DC 115V AC, 50/60 Hz [4] - Opto isolated Low State: less than 30V AC High State: greater than 100V AC	1 on Port X
Di 1	Digital Input 1 [2]		
Di 2	Digital Input 2 [2]		
Di 3	Digital Input 3 [2]		
Di 4	Digital Input 4 [2]		
Di 5	Digital Input 5 [2]		

(1) Not present on 120V versions.

(2) Digital Inputs are either 24 Volts DC (2262C) or 115 Volts AC (2262D) based on module catalog number. Be sure applied voltage is correct for I/O module.

(3) Differential Isolation - External source must be maintained at less than 160V with respect to PE. Input provides high common mode immunity.

(4) For CE compliance use shielded cable. Do not exceed 30 m (98 ft) cable length.

(5) I/O Module parameters also have a Port designation.

Analog Scaling

[Anlg In*n* Lo]
[Anlg In*n* Hi]

A scaling operation is performed on the value read from an analog input to convert it to units usable for some particular purpose. Control the scaling by setting parameters that associate a low and high analog value (in volts or mA) with a low and high target (in Hz).

Example 1

- P255 [Anlg In Type], Bit 0 = "0" (Voltage)
- P545 [Spd Ref A Sel] = "Analog In 1"
- P547 [Spd Ref A AnlgHi] = 60 Hz
- P548 [Spd Ref A AnlgLo] = 0 Hz
- P61 [Anlg In1 Hi] = 10V
- P62 [Anlg In1 Lo] = 0V

This is the default setting, where 0V represents 0 Hz and 10V represents 60 Hz providing 1024 steps (10 bit analog input resolution) between 0 and 60 Hz.

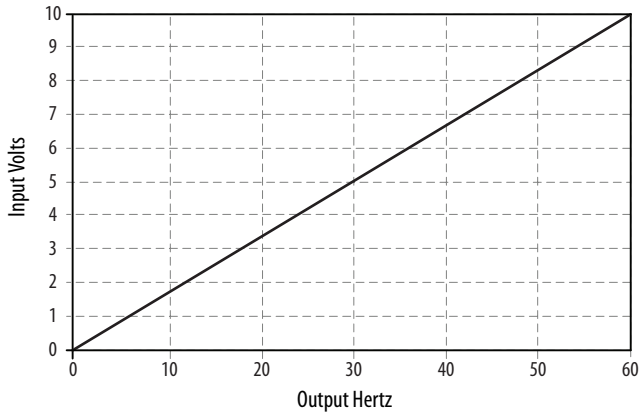

Example 2
Consider the following setup:

- P255 [Anlg In Type], Bit 0 = "0" (Voltage)
- P545 [Spd Ref A Sel] = "Analog In 1"
- P61 [Anlg In1 Hi] = 10V
- P62 [Anlg In1 Lo] = 0V
- P547 [Spd Ref A AnlgHi] = 60 Hz
- P548 [Spd Ref A AnlgLo] = 0 Hz
- P520 [Max Fwd Speed] = 45 Hz
- P522 [Min Fwd Speed] = 15 Hz

This configuration is used when non-default settings are desired for minimum and maximum speeds, but full range (0...10V) scaling from 0...60 Hz is still desired.

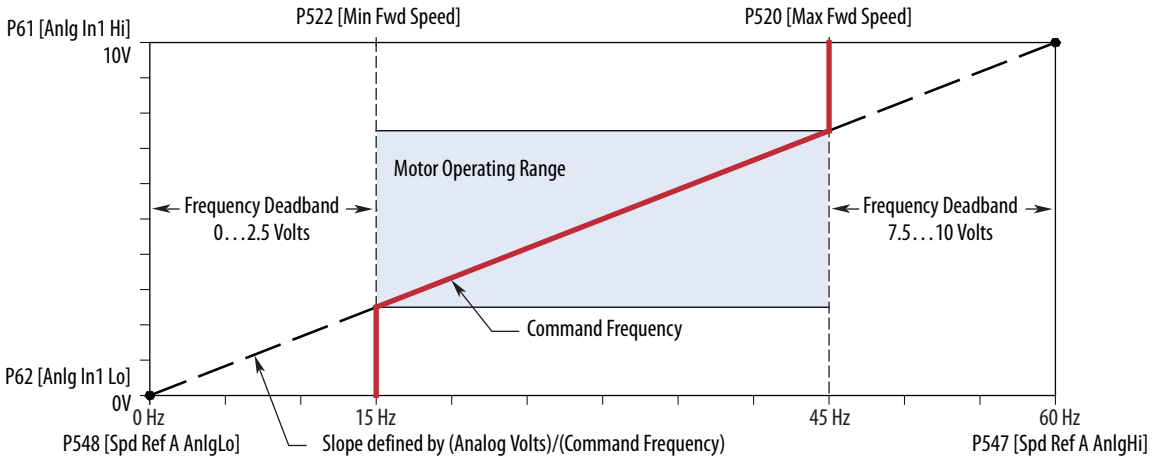

In this example, a deadband from 0...2.5V and from 7.5...10V is created. Alternatively, the analog input deadband could be eliminated while maintaining the 15 and 45 Hz limits with the following changes:

- P548 [Spd Ref A AnlgLo] = 15 Hz
- P547 [Spd Ref A AnlgHi] = 45 Hz

Example 3

- P255 [Anlg In Type], Bit 0 = "0" (Voltage)
- P545 [Spd Ref A Sel] = "Analog In 1"
- P547 [Spd Ref A AnlgHi] = 30 Hz
- P548 [Spd Ref A AnlgLo] = 0 Hz
- P61 [Anlg In1 Hi] = 10V
- P62 [Anlg In1 Lo] = 0V

This is an application that requires only 30 Hz as a maximum output frequency but is still configured for full 10V input. The result is that the resolution of the input has been doubled, providing 1024 steps between 0 and 30 Hz.

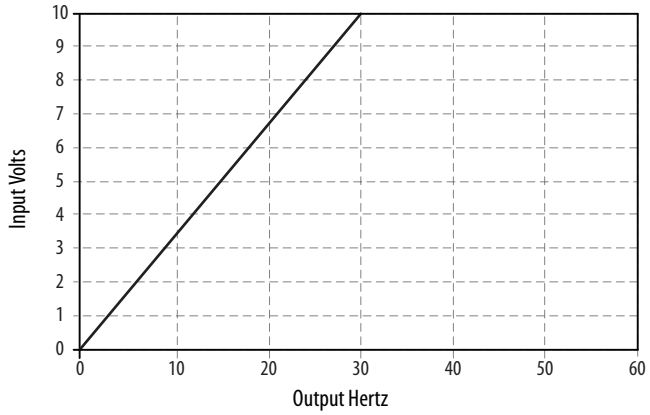

Example 4

- P255 [Anlg In Type], Bit 0 = "1" (Current)
- P545 [Spd Ref A Sel] = "Analog In 1"
- P547 [Spd Ref A AnlgHi] = 60 Hz
- P548 [Spd Ref A AnlgLo] = 0 Hz
- P61 [Anlg In1 Hi] = 20 mA
- P62 [Anlg In1 Lo] = 4 mA

This configuration is referred to as offset. In this case, a 4...20 mA input signal provides 0...60 Hz output, providing a 4 mA offset in the speed command.

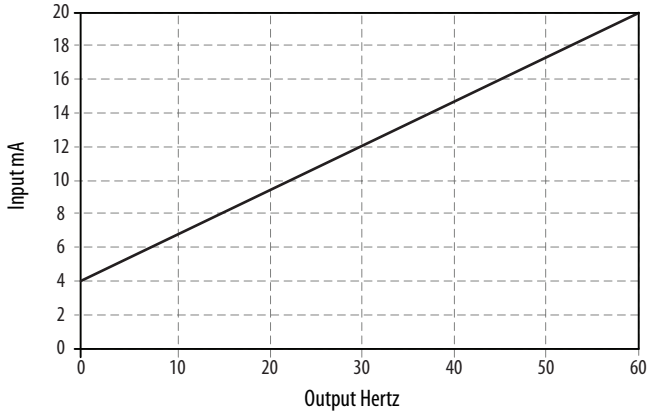

Example 5

- P255 [Anlg In Type], Bit 0 = "0" (Voltage)
- P545 [Spd Ref A Sel] = "Analog In 1"
- P547 [Spd Ref A AnlgHi] = 0 Hz
- P548 [Spd Ref A AnlgLo] = 60 Hz
- P61 [Anlg In1 Hi] = 10V
- P62 [Anlg In1 Lo] = 0V

This configuration is used to invert the operation of the input signal. Here, maximum input (10V) represents 0 Hz and minimum input (0V) represents 60 Hz.

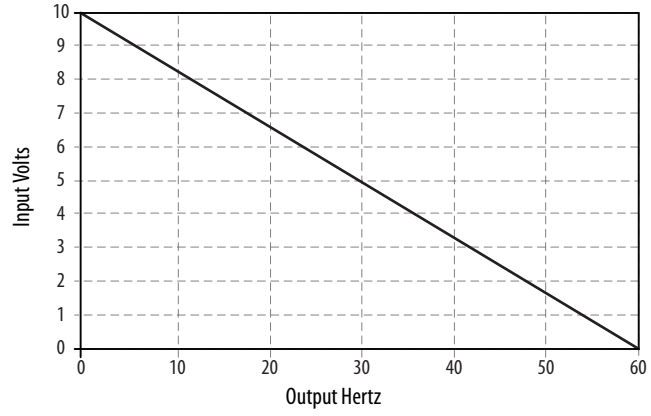

Example 6

- P255 [Anlg In Type], Bit 0 = "0" (Voltage)
- P545 [Spd Ref A Sel] = "Analog In 1"
- P547 [Spd Ref A AnlgHi] = 60 Hz
- P548 [Spd Ref A AnlgLo] = 0 Hz
- P61 [Anlg In1 Hi] = 5V
- P62 [Anlg In1 Lo] = 0V

This configuration is used when the input signal is 0...5V. Here, minimum input (0V) represents 0 Hz and maximum input (5V) represents 60 Hz. This provides full scale operation from a 0...5V source.

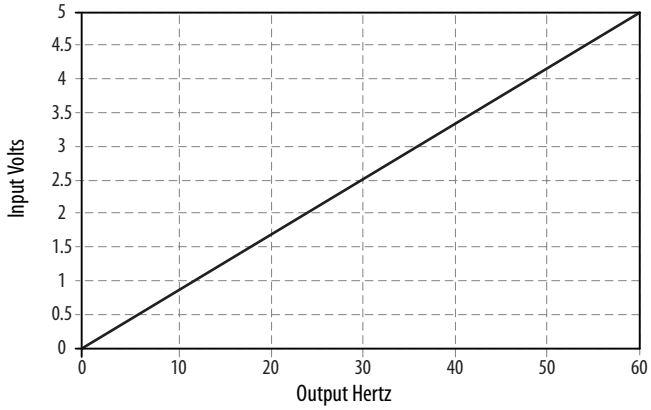

Example 7

- P255 [Anlg In Type], Bit 0 = "0" (Voltage)
- P675 [Trq Ref A Sel] = "Analog In 1"
- P677 [Trq Ref A AnlgHi] = 200%
- P678 [Trq Ref A AnlgLo] = 0%

This configuration is used when the input signal is 0...10V. The minimum input of 0V represents a torque reference of 0% and maximum input of 10V represents a torque reference of 200%.

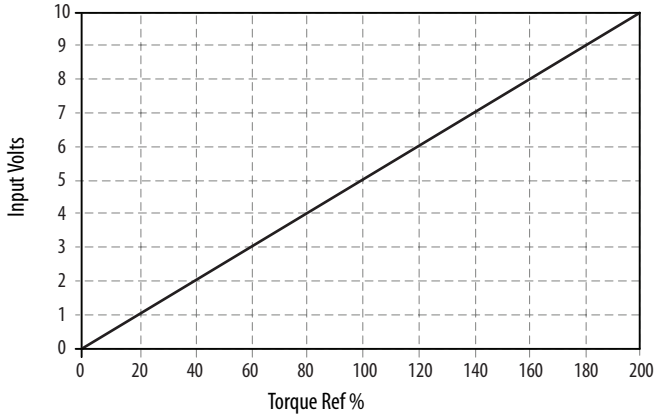

Square Root

The square root function can be applied to each analog input through the use of P256 [Anlg In Sqrt]. Enable the function if the input signal varies with the square of the quantity (for example drive speed) being controlled.

If the mode of the input is bipolar voltage (-10...10V), then the square root function returns 0 for all negative voltages.

The function uses the square root of the analog value as compared to its full scale (for example $5V = 0.5$ or 50% and $\sqrt{0.5} = 0.707$) and multiplies it times the full scale of what it controls (for example 60 Hz).

The complete function can be describes as follows:

$$\left(\sqrt{\frac{\text{Analog Value - [Analog In x Lo]}}{\text{[Analog In x Hi] - [Analog In x Lo]}}}\right) \times \left(\text{[Speed Ref A Hi] – [Speed Ref A Lo]}\right) + \text{[Speed Ref A Lo]}$$

Setting high and low values to 0V, 10V, 0 Hz, and 60 Hz, the expression reduces to the following:

$$\left(\sqrt{\frac{\text{Analog Value}}{\text{10V}}}\right) \times \text{60 Hz}$$

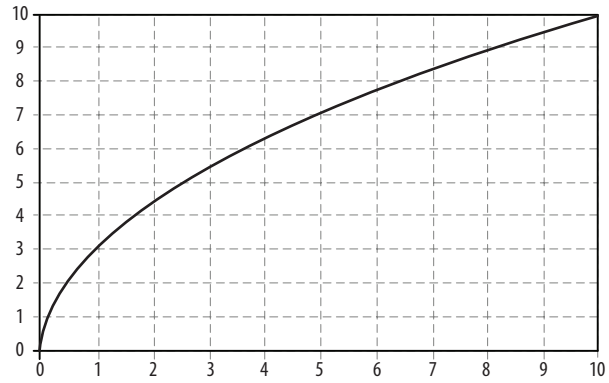

Analog Input Loss Detection

Signal loss detection can be detected for each analog input. P47 [Anlg In Loss Sts] bits 0, 1, 2 indicate if the signal is lost. Bit 0 indicates that one or both signals are lost. P53 [Anlg In0 LssActn] and P63 [Anlg In1 LssActn] defines what action the drive takes when loss of any analog input signal occurs.

Selects drive action when an analog signal loss is detected. Signal loss is defined as an analog signal less than 1V or 2 mA. The signal loss event ends and normal operation resumes when the input signal level is greater than or equal to 1.5V or 3 mA.

- "Ignore" (0) – No action is taken.
- "Alarm" (1) – Type 1 alarm indicated.
- "Flt Minor" (2) – Minor fault indicated. If running, drive continues to run. Enable with P950 [Minor Flt Cfg]. If not enabled, acts like a major fault.
- "FltCoastStop" (3) – Major fault indicated. Coast to Stop.
- "Flt RampStop" (4) – Major fault indicated. Ramp to Stop.
- "Flt CL Stop" (5) – Major fault indicated. Current Limit Stop.
- "Hold Input" (6) – Holds input at last value.
- "Set Input Lo" (7) – Sets input to P52 [Anlg In0 Lo] or P62 [Anlg In1 Lo].
- "Set Input Hi" (8) – Sets input to P51 [Anlg In0 Hi] or P61 [Anlg In1 Hi].

If the input is in Current mode, 4 mA is the normal minimum usable input value. Any value below 3.2 mA is interpreted by the drive as a signal loss, and a value of 3.8 mA is required on the input for the signal loss condition to end.

If the input is in Unipolar Voltage mode, 2V is the normal minimum usable input value. Any value below 1.6V is interpreted by the drive as a signal loss, and a value of 1.9V is required on the input for the signal loss condition to end. No signal loss detection is possible while an input is in Bipolar Voltage mode. The signal loss condition never occurs even if signal loss detection is enabled.

Analog Outputs

There are two analog outputs per I/O module. Up to five I/O modules can be mounted in the drive ports. See 750-IN001 for valid ports. Accessing the analog output parameters is done by selecting the port that the module is mounted in then accessing the Analog Output group of parameters.

Analog Output Specifications

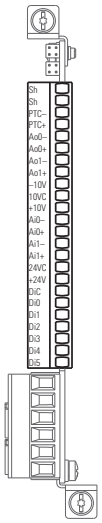

Terminal	Name	Description	Related Param (4)
Sh	Shield	Terminating point for wire shields when an EMC plate or conduit box is not installed.	
Sh			
Ptc–	Motor PTC (–)	Motor protection device (Positive Temperature Coefficient).	40 on Port X
Ptc+	Motor PTC (+)		
Ao0–	Analog Out 0 (–)	Bipolar, ±10V, 11 bit & sign, 2 k ohm minimum load. 4-20 mA, 11 bit & sign, 400 ohm maximum load.	75 on Port X
Ao0+	Analog Out 0 (+)		
Ao1–	Analog Out 1 (–)		85 on Port X
Ao1+	Analog Out 1 (+)		
–10V	–10 Volt Reference	2k ohm minimum.	
10VC	10 Volt Common	For (–) and (+) 10 Volt references.	
+10V	+10 Volt Reference	2k ohm minimum.	
Ai0–	Analog Input 0 (–)	Isolated (2), bipolar, differential, 11 bit & sign. Voltage mode: ±10V @ 88k ohm input impedance. Current mode: 0-20 mA @ 93 ohm input impedance.	50, 70 on Port X
Ai0+	Analog Input 0 (+)		
Ai1–	Analog Input 1 (–)		60, 70 on Port X
Ai1+	Analog Input 1 (+)		
24VC	24 Volt Common	Drive supplied logic input power. 200 mA max per I/O module 600 mA max per drive	
+24V	+24 Volt DC		
Di C	Digital Input Common	Common for Digital Inputs 0 . . . 5	
Di 0	Digital Input 0 (1)	24V DC - Opto isolated Low State: less than 5V DC High State: greater than 20V DC 11.2 mA DC 115V AC, 50/60 Hz (3) - Opto isolated Low State: less than 30V AC High State: greater than 100V AC	1 on Port X
Di 1	Digital Input 1 (1)		
Di 2	Digital Input 2 (1)		
Di 3	Digital Input 3 (1)		
Di 4	Digital Input 4 (1)		
Di 5	Digital Input 5 (1)		

(1) Digital Inputs are either 24 Volts DC (2262C) or 115 Volts AC (2262D) based on module catalog number. Be sure applied voltage is correct for I/O module.

(2) Differential Isolation - External source must be maintained at less than 160V with respect to PE. Input provides high common mode immunity.

(3) For CE compliance use shielded cable. Do not exceed 30 m (98 ft) cable length.

(4) I/O Module parameters also have a Port designation.

Analog Output Configuration

Parameters 75 and 85 [Anlg Out*n* Select] are use to specify the signal used on Analog Outputs 1 and 2, respectively. These parameters can be programmed to the following selections.

Parameter No.	Parameter Name
1	Output Frequency
2	Commanded SpdRef
3	Mtr Vel Fdbk
4	Commanded Trq
5	Torque Cur Fdbk
6	Flux Cur Fdbk
7	Output Current
8	Output Voltage
9	Output Power
11	DC Bus Volts

Scaling

The scaling for the analog output is defined by entering analog output voltages into two parameters, P91 [Anlg Out1 Lo] and P90 [Anlg Out1 Hi]. These two output voltages correspond to the bottom and top of the possible range covered by the quantity being output. Scaling of the analog outputs is accomplished with low and high analog parameter settings that are associated with fixed ranges (see the PowerFlex 750-Series Programming Manual, publication 750-PM001,) for each target function. Additionally, the PowerFlex 755 contains an adjustable scale factor to override the fixed target range. P77 [Anlg Out0 Data] and 82 [Anlg Out0 Val] are described in the following charts.

Case 1

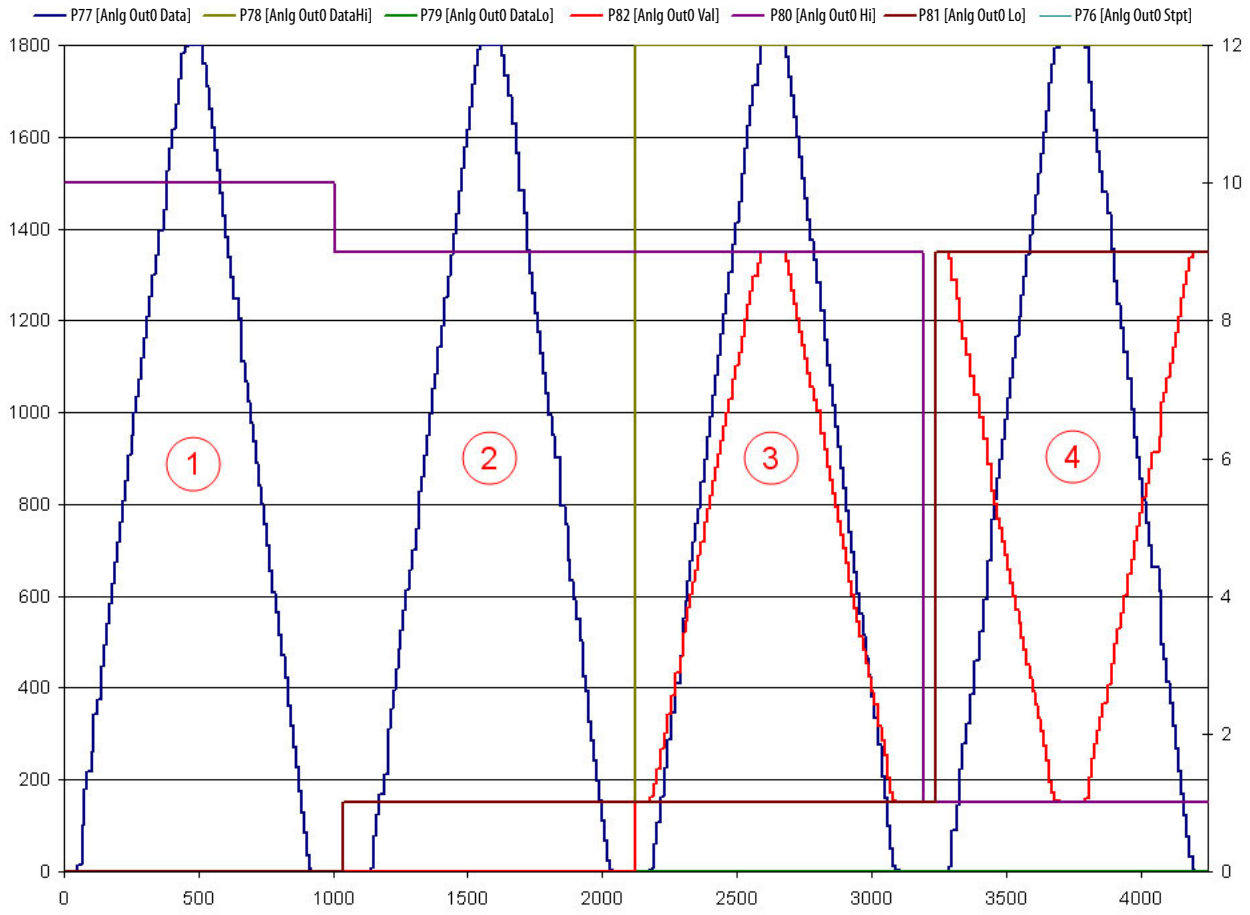

Case 1: This shows P77 [Anlg Out0 Data] the units are consistent with the selection of P75 [Anlg Out0 Sel]. In this case, the analog out select is set to P3 [Mtr Vel Fdbk] and the units are in rpm. P80 [Anlg Out0 Hi], P81 [Anlg Out0 Lo], P78 [Anlg Out0 DataHi], and P79 [Anlg Out0 DataLo] are all at default. The motor was started and ramped to 1800 rpm. Note that P82 [Anlg Out0 Val] remained zero.

Case 2: Here the P80 [Anlg Out0 Hi] is changed to 9 and P81 [Anlg Out0 Lo] is changed to 1. As the motor ramps up and down, there is no change in the value or scaling of P77 [Anlg Out0 Data]. Note that P82 [Anlg Out0 Val] is still zero.

Case 3: Now P78 [Anlg Out0 DataHi] is changed to 1800 and P79 [Anlg Out0 DataLo] is left at zero. When started P82 [Anlg Out0 Val] starts at 1 and reaches 9 when the motor speed is at maximum.

Case 4: In this section the P80 [Anlg Out0 Hi] and P81 [Anlg Out0 Lo] were reversed in value. Now when the motor ramps up and down P82 [Anlg Out0 Val] is just the opposite. It starts out at 9 and is at 1 at full speed.

Case 2

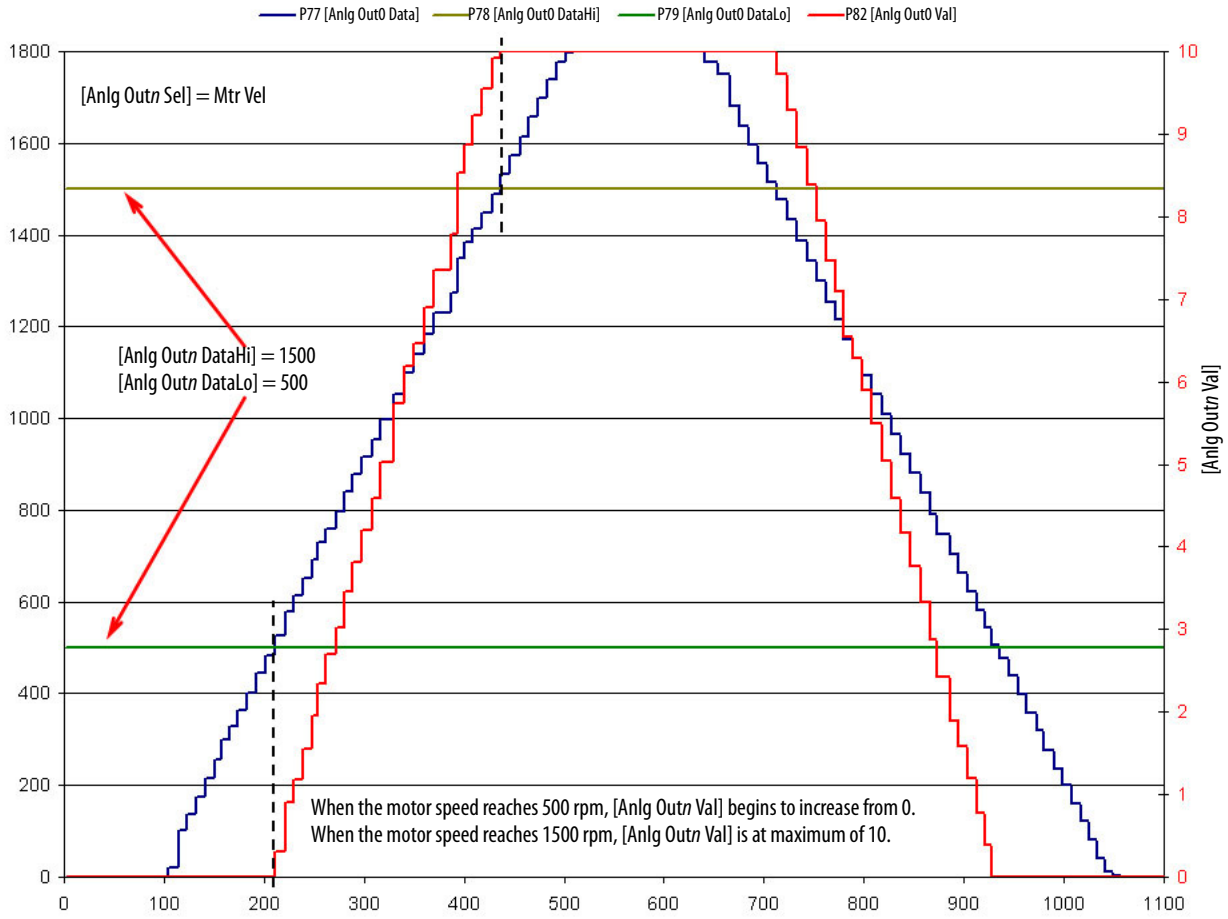
P77 [Anlg Out0 Data]
P78 [Anlg Out0 DataHi]
P79 [Anlg Out0 DataLo]
P82 [Anlg Out0 Val]
[Anlg Outn Sel] = Mtr Vel
[Anlg Outn DataHi] = 1500
[Anlg Outn DataLo] = 500
When the motor speed reaches 500 rpm, [Anlg Outn Val] begins to increase from 0.
When the motor speed reaches 1500 rpm, [Anlg Outn Val] is at maximum of 10.
[Anlg Outn Val]
1800
1600
1400
1200
1000
800
600
400
200
0
10
9
8
7
6
5
4
3
2
1
0
0
100
200
300
400
500
600
700
800
900
1000
1100

Case 3

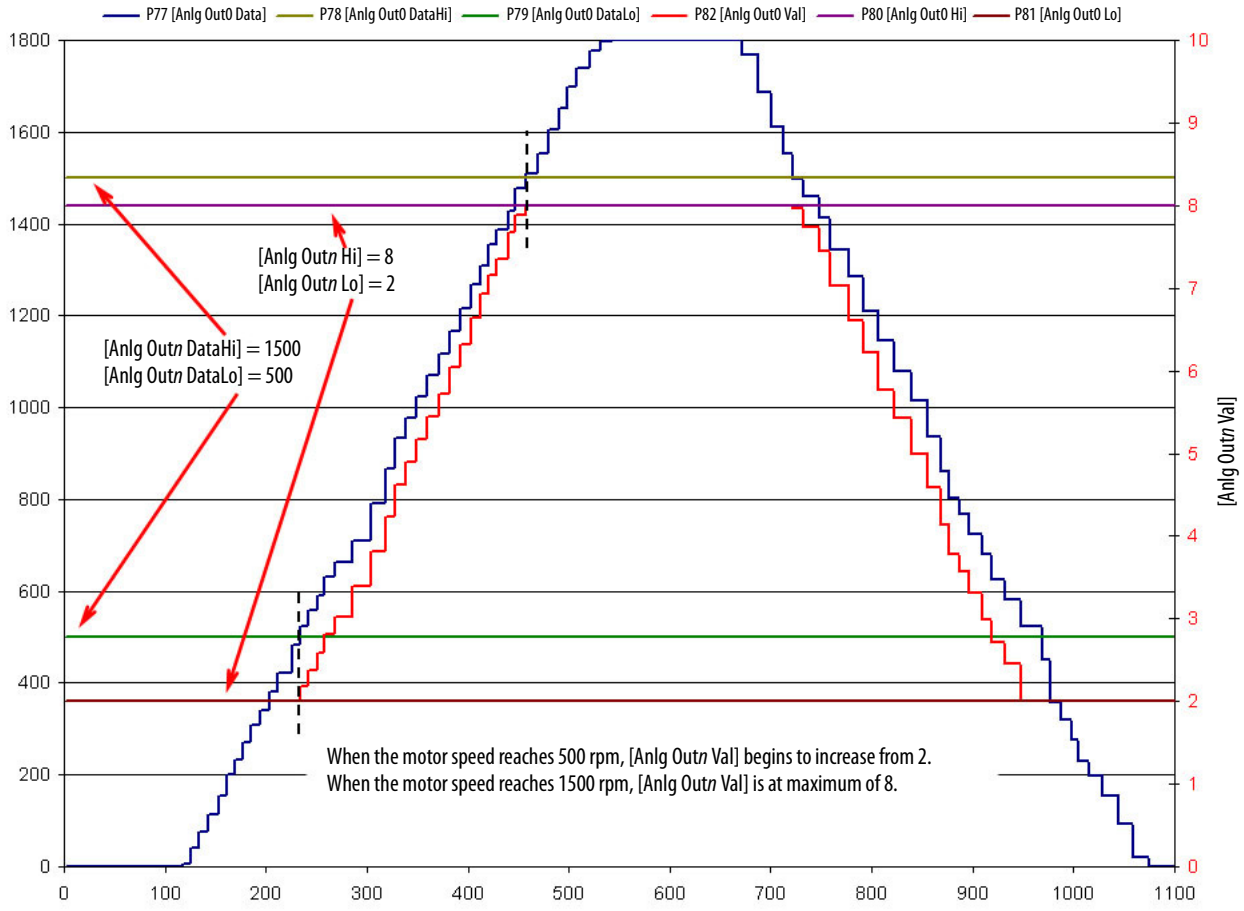

Absolute (Default)

Certain quantities used to drive the analog output are signed, for example the quantity can be both positive and negative. You have the option of having the absolute value (value without sign) of these quantities taken before the scaling occurs. Absolute value is enabled separately for each analog output via the bit enumerated P71 [Analog Out Abs].

Setpoint

Setpoint is a possible source for an analog output. It can be used to control an analog output from a communication device using a DataLink. Change P75 [Anlg Out0 Sel] to 76 [Anlg Out0 Stpt]. Then map a datalink to P76 and you'll be able to drive the analog output over a network.

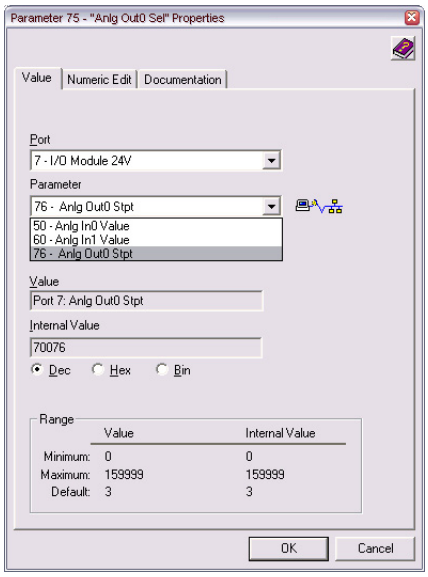

Digital Inputs

Physical inputs are programmed to desired digital input functions. These parameters cannot be changed while the drive is running.

Technical Information

The PowerFlex 753 drive has three digital inputs on its main control board:

- Di 0 – Configured for 115V AC or 24V DC
  - Shared common (Di C) between Di 0ac and Di 0dc terminals
  - TB3 - bottom of the main control board
- Di 1 and Di 2 – Configured for 24V DC
  - Shared common (Di C) for Di 1 and Di 2
  - TB1 - lower front of the main control board

PowerFlex 753 Main Control Board I/O TB1 wiring examples are included in the PowerFlex 750-Series AC Drives Installation Instructions, publication 750-IN001.

The PowerFlex 755 drive has one digital input on its main control board:

- Di0 – configured for 115V AC or 24V DC
  - Shared common (Di C) between Di 0ac and Di 0dc terminals
  - TB1 - bottom of the main control board

There are also PowerFlex 750-Series option modules that expand the amount of digital inputs that can be used in both the PowerFlex 753 and 755 drives.

20-750-2262C-2R / 20-750-2263C-1R2T

- Six 24V DC input terminals:
  - Labeled as Di 0, Di 1, Di 2, Di 3, Di 4 and Di 5
  - Shared common (Di C)
  - TB1 - front of the option module

20-750-2262D-2R

- Six 115V AC input terminals:
  - Labeled as Di 0, Di 1, Di 2, Di 3, Di 4 and Di 5
  - Shared common terminal (Di C)
  - TB1 - front of the option module

PowerFlex 750-Series Option Modules I/O TB1 wiring examples are included in the PowerFlex 750-Series AC Drives Installation Instructions, publication 750-IN001.

Configuration

Digital inputs can be programmed to a desired function defined by Parameters 155 to 201 below. These parameters cannot be changed while the drive is running.

Number	Parameter Name	Number	Parameter Name	Number	Parameter Name
155	DI Enable	170	DI Jog 2 Forward	187	DI PwrLoss ModeB
156	DI Clear Fault	171	DI Jog 2 Reverse	188	DI Pwr Loss
157	DI Aux Fault	172	DI Manual Ctrl	189	DI Precharge
158	DI Stop	173	DI Speed Sel 0	190	DI Prchrg Seal
159	DI Cur Lmt Stop	174	DI Speed Sel 1	191	DI PID Enable
160	DI Coast Stop	175	DI Speed Sel 2	193	DI PID Hold
161	DI Start	176	DI HOA Start	193	DI PID Reset
162	DI Fwd Reverse	177	DI MOP Inc	194	DI PID Invert
163	DI Run	178	DI MOP Dec	195	DI Torque StptA
164	DI Run Forward	179	DI Accel 2	196	DI Fwd End Limit
165	DI Run Reverse	180	DI Decel 2	197	DI Fwd Dec Limit
166	DI Jog 1	181	DI SqTqPs Sel 0	198	DI Rev End Limit
167	DI Jog 1 Forward	182	DI SqTqPs Sel 1	199	DI Rev Dec Limit
168	DI Jog 1 Reverse	185	DI Stop Mode B	200	DI PHdwr OvrTrvl
169	DI Jog 2	186	DI BusReg Mode B	201	DI NHdwr OvrTrvl

Operation for DI Run type parameters can be defined by P150 [Digital In Cfg]:

- "Run Edge" (0) – Control function requires a rising edge (open to close transition) for the drive to run.
- "Run Level" (1) – As long as a separate "Stop" command is not issued, the level alone (no rising edge required) determines whether the drive runs. When set to 1 "Run Level" the absence of a run command is indicated as a stop asserted and P935 [Drive Status 1] Bit 0 is low.



ATTENTION: Equipment damage and/or personal injury may result if this parameter is used in an inappropriate application. Do not use this function without considering applicable local, national and international codes, standards, regulations, or industry guidelines.

Functional Descriptions

DI Enable
Closing this input lets the drive run when a Start command is issued. If the drive is already running when this input is opened, the drive will coast stop and indicate "not enabled" on the HIM (if present). This is not considered a fault condition, and no fault is generated. If this function is not configured, the drive is considered enabled.

IMPORTANT If the ENABLE (J1) jumper is removed, the Di 0 becomes a hardware enable. For the PowerFlex 753, Di 0 is found on TB3 and for the PowerFlex 755, Di 0 is found on TB1.

A combination of the hardware enable and a software enable can be utilized; however, the drive will not run if any of the inputs are open.

DI Clear Fault
The "Clear Fault" digital input function lets an external device reset drive faults through the terminal block. An open to closed transition on this input causes an active fault (if any) to be reset.

DI Aux Fault
This input function is normally closed and lets external equipment fault the drive. When this input opens, the drive faults on a F2 "Auxiliary Input" fault code. If this input function is not configured, the fault will not occur.

DI Stop
An open input causes the drive to stop and become "Not Ready." A closed input lets the drive run when given a Start or Run command. If "Start" is configured, then "Stop" must also be configured, otherwise, a digital input configuration alarm occurs.

P370 [Stop Mode A] and P371 [Stop Mode B] dictate the drive's stop action. Refer to Stop Modes on page 96 for more details.

DI Cur Lmt Stop
With this digital input function, an open input causes the drive to current limit stop. The drive acknowledges the stop command by setting the motor speed reference to zero, causing the drive to bring the motor down to zero speed as fast as the power limits, torque limits, and current limits allow. When the drive output reaches zero, the output transistors are shut off.

DI Coast Stop
With this digital input function, an open input causes the drive to Coast-to-Stop. The drive acknowledges the stop command by shutting off the output transistors and releasing control of the motor. The load/motor will coast or free spin until the mechanical energy is dissipated.

DI Start
An open to closed transition while the drive is stopped causes the drive to run in the current direction, unless the "Stop" input function is open. If "Start" is configured, then a "Stop" must also be configured.

DI Fwd Reverse
This digital input function is one of the ways to provide direction control when the "Start" or "Run" functions (not combined with direction) are used. An open input sets direction to forward. A closed input sets direction to reverse. If state of input changes and drive is running or jogging, the drive changes direction.

DI Run Forward, DI Run Reverse
These digital input functions cause the drive to run and with a specific direction, as long as the configured input is held closed. Also, these "2-wire" settings prevent any other connected device from starting the drive. An open to closed transition on one input or both inputs while the drive is stopped causes the drive to run unless the "Stop" input function is configured and open.

The table below describes the basic action taken by the drive in response to particular states of these input functions.

Run Forward	Run Reverse	Action
Open	Open	Drive stops, terminal block relinquishes direction ownership.
Open	Closed	Drive runs in reverse direction, terminal block takes direction ownership.
Closed	Open	Drive runs in forward direction, terminal block takes direction ownership.
Closed	Closed	Drive continues to run in current direction, but terminal block maintains direction ownership.

It is not necessary to program both "Run Forward" and "Run Reverse." These two functions operate with or without each other.

IMPORTANT Direction control is an "Exclusive Ownership" function (see Owners). This means that only one control device (terminal block, DPI device, HIM, and so forth) at a time is allowed to control direction at a time. The terminal block must become direction "owner" before it can be used to control direction. If another device is currently the direction owner (as indicated by P922 [Dir Owner]), it is not possible to start the drive or change direction by using the terminal block digital inputs programmed for both Run and Direction control (for example Run/Fwd).

DI Run
This digital input function is similar to "Run Forward" and "Run Reverse" settings. The only difference being that direction is determined by another input or another device's command (HIM or communication adapter).

DI Jog 1 Forward, DI Jog 1 Reverse, DI Jog 2 Forward, DI Jog 2 Reverse
Jog is a non-latched command such as Run, but overrides the normal speed reference and uses P556 [Jog Speed 1] or P557 [Jog Speed 2] respectively.

An open to closed transition on one input or both inputs while the drive is stopped causes the drive to jog unless the "Stop" input function is configured and

open. The table below describes the actions taken by the drive in response to various states of these input functions.

Jog Forward	Jog Reverse	Action
Open	Open	Drive stops if already jogging, but can be started by other means. Terminal block relinquishes direction ownership.
Open	Closed	Drive jogs in reverse direction. Terminal block takes direction ownership.
Closed	Open	Drive jogs in forward direction. Terminal block takes direction ownership.
Closed	Closed	Drive continues to jog in current direction, but terminal block maintains direction ownership.

The drive will not jog while the drive is running or while the "Stop" input is open. Start has precedence.

DI Jog 1, DI Jog 2
These digital input functions are similar to "Jog Forward" and "Jog Reverse" with the only difference being that direction is determined by another input or another device's command (HIM or communication adapter). In addition, these settings use either P556 [Jog Speed 1] or P557 [Jog Speed 2], respectively. In Unipolar mode, the absolute value is used along with a separate direction command. In Bipolar mode, the polarity of P556 [Jog Speed 1] or P557 [Jog Speed 2] determines the direction of jog.

DI Manual Ctrl
The digital input function works in conjunction with the overall Auto/Manual function. When this input is closed, it overrides other speed references, but only if another device (HIM) did not have ownership of the Manual state. If the digital input is successful in gaining manual control, the speed reference comes from P563 [DI ManRef Sel], which can be set to any of the Analog Inputs, Preset Speeds, MOP Reference, or an applicable Port Reference.

Associated with this digital input function, there is the ability to configure the drive to switch smoothly from an automatic (communicated) speed reference to manual speed reference produced by the Human Interface Module (HIM). When the drive is commanded to switch from the automatic (communicated) speed reference to the manual reference via a digital input, it preloads the last value from the speed feedback into the HIM. Then the operator can modify the manual reference on the HIM. This avoids a step change in speed that otherwise occurs from the switch. Use this feature by configuring P328 [Alt Man Ref Sel], P331 [Manual Preload], P172 [DI Manual Ctrl], and P563 [DI ManRef Sel]. This feature requires revision 2.001 of 20-HIM-A6 firmware or later.

DI Speed Sel 0, 1, and 2
These digital input functions can be used to select the speed reference. The open/closed state of all the speed select digital input functions combine to select which source is the speed reference.

DI Speed Sel 2	DI Speed Sel 1	DI Speed Sel 0	Auto Reference Source (Parameter)
0	0	0	Reference A (P545 [Spd Ref A Sel])
0	0	1	Reference A (P545 [Spd Ref A Sel])
0	1	0	Reference B (P550 [Spd Ref B Sel])
0	1	1	Preset Speed 3 (P573 [Preset Speed 3])
1	0	0	Preset Speed 4 (P574 [Preset Speed 4])
1	0	1	Preset Speed 5 (P575 [Preset Speed 5])
1	1	0	Preset Speed 6 (P576 [Preset Speed 6])
1	1	1	Preset Speed 7 (P577 [Preset Speed 7])

Refer to Speed Reference on page 251 for more details.

DI HOA Start
This digital input function provides Hand-Off-Auto control. It functions like a three-wire start signal; with the exception, that it does not require the DI Stop to be high for a full input cycle before the drive looks for a rising edge on DI HOA Start. Use this feature by configuring P176 [DI HOA Start].

DI MOP Inc, DI MOP Dec
These digital input functions are used to increment and decrement the Motor Operated Potentiometer (MOP) value inside the drive. The MOP is a reference value that can be incremented and decremented by external devices. The MOP value has a configurable preload that is retained through a power cycle. For the drive to use the MOP value as the current speed reference, either P545 [Speed Ref A Sel], P550 [Speed Ref B Sel], or P563 [DI ManRef Sel] must be set to P558 [MOP Reference].

DI Accel 2, DI Decel 2
These digital input functions toggle between primary and secondary ramp rates. For example, with a digital input programmed to P179 [DI Accel 2], an open digital input follows P535 [Accel Time 1]. A closed digital input follows P536 [Accel Time 2].

DI SpTqPs Sel 0 and 1
These digital input functions provide the ability to switch between different Speed/Torque/Position modes, (P309 [SpdTrqPsn Mode A], P310 [SpdTrqPsn Mode B], P311 [SpdTrqPsn Mode C], and P312 [SpdTrqPsn Mode D]) from digital input combinations. See Speed Torque Position on page 266 for a complete description of these modes and the digital input combinations that activate each mode.

DI Stop Mode B
This digital input function selects between two different drive Stop modes. If the input is open, then P370 [Stop Mode A] selects which Stop mode to use. If the input is closed, then P371 [Stop Mode B] selects which Stop mode to use. If this input function is not configured, then P370 [Stop Mode A] always selects which Stop mode to use. See also Stop Modes on page 96 for more details.

DI BusReg Mode B
This digital input function selects how the drive regulates excess voltage on the DC bus. If the input is open, then P372 [Bus Reg Mode A] selects which bus regulation mode to use. If the input is closed, then P373 [Bus Reg Mode B] selects which bus regulation mode to use. If this input function is not configured, then P372 [Bus Reg Mode A] always selects which bus regulation mode to use. See also Bus Regulation on page 41 for more details.

DI PwrLoss ModeB
This digital input function selects between two different drive power loss modes. If the input is open, P450 [Pwr Loss Mode A] dictates the drive's action during the Power Loss mode. If the input is closed, P371 [Stop Mode B] dictates the drive's action during the power loss. If this input function is not configured, P450 [Power Loss Mode A] always dictates the drive's action during the power loss. See also Power Loss on page 72 for more details.

DI Pwr Loss
The drive contains a sophisticated algorithm to manage initial application of power as well as recovery from a partial power loss event. This digital input function is used to force the drive into a power loss condition. If this input is open, the drive's internal algorithm dictates the power loss condition. If the input is closed, the algorithm is overridden and the drive is externally forced into a power lost condition. P449 [Power Loss Actn] configures the drive's response to a power loss time out condition and P452 [Pwr Loss A Time] or P455 [Pwr Loss B Time] set the time that the drive remains in Power Loss mode before a fault occurs. See also Power Loss on page 72 for more details.

DI Precharge
This digital input function is used to manage disconnection from a common DC bus. If the input is closed, this indicates that the drive is connected to common DC bus and normal precharge handling can occur, and that the drive can run (start permissive). If the physical input is open, this indicates that the drive is disconnected from the common DC bus, and the drive enters the precharge state and initiates a coast stop immediately to prepare for reconnection to the bus. If this input function is not configured, then the drive assumes that it is always connected to the DC bus, and no special precharge handling is done.

DI Prchrg Seal
This digital input function is used to force a unique fault when an external precharge circuit opens. P323 [Prchrg Err Cfg] dictates the action taken when an external precharge circuit has opened.

DI PID Enable
If this digital input function is closed, the operation of the Process PID loop is enabled. If this input function is open, the operation of the Process PID loop is disabled.

DI PID Hold
If this input function is closed, the integrator for the Process PID loop is held at the current value. If this input function is open, the integrator for the Process PID loop is allowed to increase.

DI PID Reset
If this input function is closed, the integrator for the Process PI loop is reset to 0. If this input function is open, the integrator for the Process PI loop integrates normally.

DI PID Invert
If this input function is closed, the PI Error is inverted. If this input function is open, the PI Error is not inverted.

DI Torque StptA
This digital input function is used to force P676 [Trq Ref A Stpt] as the source for Torque Reference A, regardless of the setting in P675 [Trq Ref A Sel]. Used when the drive is in a mode that is commanding torque. Refer to P309 [SpdTrqPsn Mode A], P310 [SpdTrqPsn Mode B], P311 [SpdTrqPsn Mode C], and P312 [SpdTrqPsn Mode D].

DI Fwd End Limit, DI Rev End Limit
These digital input functions are used to trigger a Forward End Limit and/or a Reverse End Limit. The resulting action depends on whether the drive is operating as a speed, torque or position regulator. The mode of operation is indicated by P935 [Drive Status 1] Bit 21 "Speed Mode," Bit 22 "PositionMode," and Bit 23 "Torque Mode." When the drive is operating as a speed regulator, the resulting action is to execute a "Fast Stop" command. After the drive stops in this case, it only restarts in the opposite direction (if given a new start command). This function is usually used with a limit switch near the point where the drive needs to stop. When the drive is operating as a torque regulator, the resulting action is to execute a "Fast Stop" command. After the drive stops in this case, it restarts and continues operation (if given a new start command). When the drive is operating as a position regulator, the resulting action is to execute a "Fast Stop" command. After the drive stops in this case, it restarts and continues to move towards the position reference (if given a new start command).

DI Fwd Dec Limit, DI Rev Dec Limit
These digital input functions are used to trigger a Forward Decel Limit and/or a Reverse Decel Limit. The resulting action depends on whether the drive is operating as a speed, torque or position regulator. The mode of operation is indicated by P935 [Drive Status 1] Bit 21 "Speed Mode," Bit 22 "PositionMode" and Bit 23 "Torque Mode." When the drive is operating as a speed regulator, the resulting action is to override the speed reference and decelerate to Preset Speed 1. This function is usually used with a limit switch and initiates the slowing down process prior to encountering the End Limit. When the drive is operating as a torque regulator, the drive ignores this signal and continues operating at its torque reference. When the drive is operating as a position regulator, the drive ignores this signal and continues moving towards its position reference.

DI PHdwr OvrTrvl, DI NHdwr OvrTrvl
These digital input functions are used to trigger a Positive Hardware Over-travel and/or a Negative Hardware Over-travel. The resulting action is to immediately fault and produce zero torque. After the drive is stopped, the condition needs to be cleared and the fault needs to be reset. The drive restarts (if given a new start command), and continues operation. It follows any speed reference, position reference, or torque reference. The drive's direction is not modified or limited after the restart. This function is usually used with a limit switch in a position beyond the "End Limit," as an extra safety limit to prevent torque from damaging the machine in an over-travel situation.

Status
For the PowerFlex 753 main control board Digital Inputs (Di) 0, 1, and 2, P220 [Digital In Sts] Bits 0, 1 and 2 represents its respective inputs status. For the PowerFlex 755 main control board Digital Inputs (Di) 0, P220 [Digital In Sts] Bit 0 represents its respective digital input status. For the PowerFlex 750-Series Option Module Digital Inputs (Di) 0, 1, 2, 3, 4, and 5, P1 [Dig In Sts] Bits 0, 1, 2, 3, 4, and 5 represents its respective digital input status. When the bit associated with the digital input is on, depicted by a 1, this means that the drive recognizes that the digital input is on. When the bit associated with the digital input is off, represented by a 0, this means that the drive recognizes that the digital input is off.

Configuration Conflicts
If you configure the digital inputs so that one or more selections conflict with each other, one of the digital input configuration alarms is asserted. As long as the Digital Input Conflict exists, the drive will not start. These alarms are automatically cleared by the drive as soon as the parameters are changed to remove the conflicts. These are examples of configurations that cause an alarm:

- Configuring both the "Start" input function and the "Run Forward" input function at the same time. "Start" is used only in "3-wire" Start mode, and "Run Forward" is used only in "2-wire" Run mode, therefore, do not configured at the same time.
- Configuring the same toggle input function (for instance "Fwd Reverse") to more than one physical digital input simultaneously.

These alarms, called Type 2 Alarms, are different from other alarms in that it is not possible to start the drive while the alarm is active. It is possible for any of these alarms to occur while the drive is running, because all digital input configuration parameters can be changed only while the drive is stopped. Whenever one or more of these alarms is present, the drive ready status becomes "not ready" and the HIM displays a conflict message. In addition, the drive status light flashes yellow. Refer to the PowerFlex 750-Series Programming Manual, publication 750-PM001, for a complete list of Type 2 Alarms.

DigIn Cfg B
Digital input conflict. Input functions that cannot exist at the same time have been selected. Correct Digital Input configuration.

DigIn Cfg C
Digital input conflict. Input functions that cannot be assigned to the same digital input have been selected. Correct Digital Input configuration.

Block Diagrams

Figure 8 - PowerFlex 753

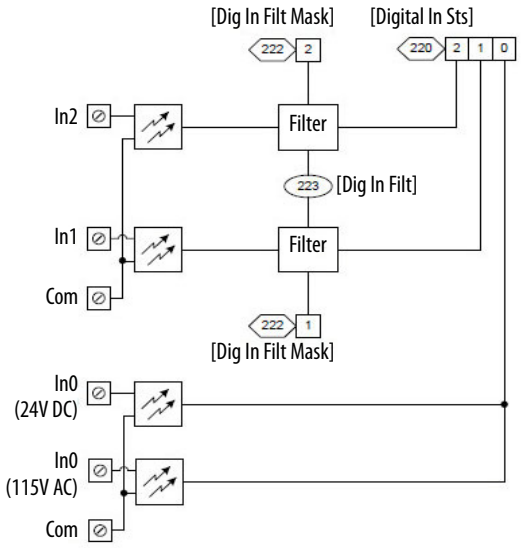

Figure 9 - PowerFlex 755

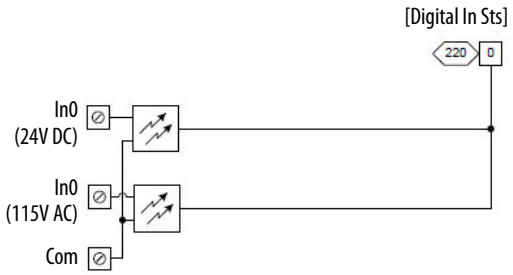

Figure 10 - PowerFlex 750-Series Option Module

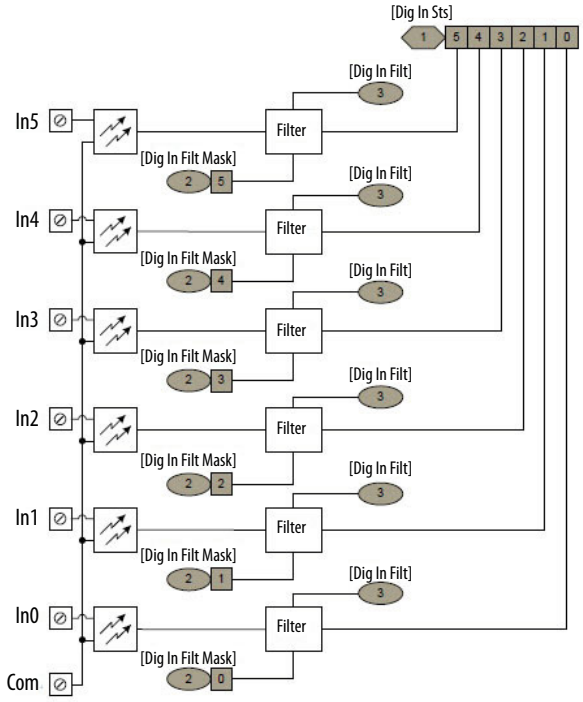

Digital Outputs

The PowerFlex 753 has one transistor output and one relay output embedded on its main control board.

The transistor output is on TB1 at the lower front of the main control board.

Terminal	Name	Description	Rating
T0	Transistor Output 0	Transistor Output	48V DC, 250 mA maximum load. Open drain output.

The relay output is on TB2 at the bottom of the main control board.

Terminal	Name	Description	Rating
R0NC	Relay 0 N.C.	Output Relay 0 normally closed contact	240V AC, 24V DC, 2A max Resistive Only
R0C	Relay 0 Common	Output Relay 0 Common	
R0NO	Relay 0 N.O.	Output Relay 0 normally open contact	240V AC, 24V DC, 2A max General Purpose (Inductive) / Resistive

Refer to the PowerFlex 750-Series AC Drives Installation Instructions, publication 750-IN001, for PowerFlex 753 Main Control Board I/O wiring examples.

The PowerFlex 755 has no outputs embedded on its Main Control Board.

There are PowerFlex 750-Series Option Modules that expand the amount of digital outputs that can be used in both the PowerFlex 753 and 755 drives.

Catalog numbers 20-750-2262C-2R and 20-750-2262D-2R provide two relay outputs on TB2 at the front of option module.

Terminal	Name	Description	Rating
R0NC	Relay 0 N.C.	Output Relay 0 normally closed contact	240V AC, 24V DC, 2A max Resistive Only
R0C	Relay 0 Common	Output Relay 0 common	
R0NO	Relay 0 N.O.	Output Relay 0 normally open contact	240V AC, 24V DC, 2A max General Purpose (Inductive) / Resistive
R1NC	Relay 1 N.C.	Output Relay 1 normally closed contact	240V AC, 24V DC, 2A max Resistive Only
R1C	Relay 1 Common Output	Relay 1 common	
R1NO	Relay 1 N.C.	Output Relay 1 normally open contact	240V AC, 24V DC, 2A max General Purpose (Inductive) / Resistive

Catalog number 20-750-2263C-1R2T provides one transistor output and two relay outputs on TB2 at the front of option module.

Terminal	Name	Description	Rating
R0NC	Relay 0 N.C.	Output Relay 0 normally closed contact	240V AC, 24V DC, 2A max Resistive Only
R0C	Relay 0 Common Output	Relay 0 common	
R0NO	Relay 0 N.O.	Output Relay 0 normally open contact	240V AC, 24V DC, 2A max General Purpose (Inductive) / Resistive
T0	Transistor Output 0	Transistor Output	24VDC = 1A max 24VDC = 0.4 Max for U.L. applications. Resistive
TC	Transistor Output Common	Transistor Output Common	
T1	Transistor Output 1	Transistor Output	24VDC = 1A max 24VDC = 0.4 Max for U.L. applications. Resistive

Refer to the PowerFlex 750-Series AC Drives Installation Instructions, publication 750-IN001, for PowerFlex 750-Series Option Module I/O wiring examples.

Configuration

Each digital output can be programmed to change state based on one of many different conditions. These conditions can fall into different categories.

- Drive status conditions (fault, alarm, and reverse).
- Level conditions (DC bus voltage, current, and frequency)
- Controlled by a digital input.
- Controlled by the network.
- Controlled by DeviceLogix software.

Drive Status Conditions

For PowerFlex 750-Series drives utilizing an option module, the table below shows an overview of the selectable configurations for the drive's digital output Sel parameters.

Parameter No.	Parameter Name	Description
220(1)	Digital In Sts	Status of the digital inputs resident on the main control board (Port 0).
227(1)	Dig Out Setpoint	Controls Relay or Transistor Outputs when chosen as the source. Can be used to control outputs from a communication device using DataLinks.
233(1)	RO0 Level CmpSts	Status of the level compare, and a possible source for a relay or transistor output.
720	PTP PsnRefStatus	Displays the current operating status of the Point-To-Point Position Planner in the Position Referencing.
724	Psn Reg Status	Indicates status of position control logic.
730	Homing Status	Indicates status of position control logic.
933	Start Inhibits	Indicates which condition is preventing the drive from starting or running.
935	Drive Status 1	Present operating condition of the drive.
936	Drive Status 2	Present operating condition of the drive.
937	Condition Sts 1	Status of conditions that can result in the drive taking action (faulting), based on configuration of protective functions.
945	At Limit Status	Status of dynamic conditions within the drive that are either active or a limit is being applied.
952	Fault Status A	Indicates the occurrence of conditions that have been configured as faults. These conditions are from P937 [Condition Sts 1].
953	Fault Status B	Indicates the occurrence of conditions that have been configured as faults.
959	Alarm Status A	Indicates the occurrence of conditions that have been configured as alarms. These events are from P937 [Condition Sts 1].
960	Alarm Status B	Indicates the occurrence of conditions that have been configured as alarms.
961	Type 2 Alarms	Indicates the occurrence of conditions that have been configured as alarms.
1089	PID Status	Status of the Process PI regulator.
1103(2)	Trq Prove Status	Displays the status bits for TorqProve.
1210(2)	Profile Status	Indicates status of speed profile/position indexer control logic.
1(3)(4)	Dig In Sts	Status of the digital inputs.
7(3)(4)	Dig Out Setpoint	Controls Relay or Transistor Outputs when chosen as the source. Can be used to control outputs from a communication device using DataLinks.
13(3)(4)	RO0 Level CmpSts	Status of the level compare, and a possible source for a relay or transistor output.
50(5)	DLX DigOut Sts	Provides the individual on/off status of the DLX Logic Command word bits.
51(5)	DLX DigOut Sts2	Provides the individual on/off status of the 16 DLX DOPs.

(1) PowerFlex 753 drives only.
(2) PowerFlex 755 drives only.
(3) Option modules can be used in Ports 4, 5, and 6 of PowerFlex 753 drives.
(4) Option modules can be used in Ports 4, 5, 6, 7, and 8 of PowerFlex 755 drives.
(5) Port 14: DeviceLogix software parameters.

Refer the PowerFlex 750-Series Programming Manual, publication 750-PM001, for specific parameter bit level details.

Related PowerFlex 753 selection parameter information is noted below.

Parameter No.	Parameter Name	Description
230	R00 Sel	Selects the source that energizes the relay output.
240	T00 Sel	Selects the source that energizes the relay or transistor output.

Depending on the PowerFlex 750-Series Option Module or Modules installed in the drive, related selection parameter information is noted below.

Parameter No.	Parameter Name	Description
10	R00 Sel	Selects the source that energizes the relay output.
20	R01 Sel or T00 Sel	Selects the source that energizes the relay or transistor output.
30	T01 Sel	Selects the source that energizes the transistor output.

Example

Below is an example of a PowerFlex 753 drive's utilizing an embedded digital output Sel parameter being configured such that the output energizes when a fault is present on the drive.

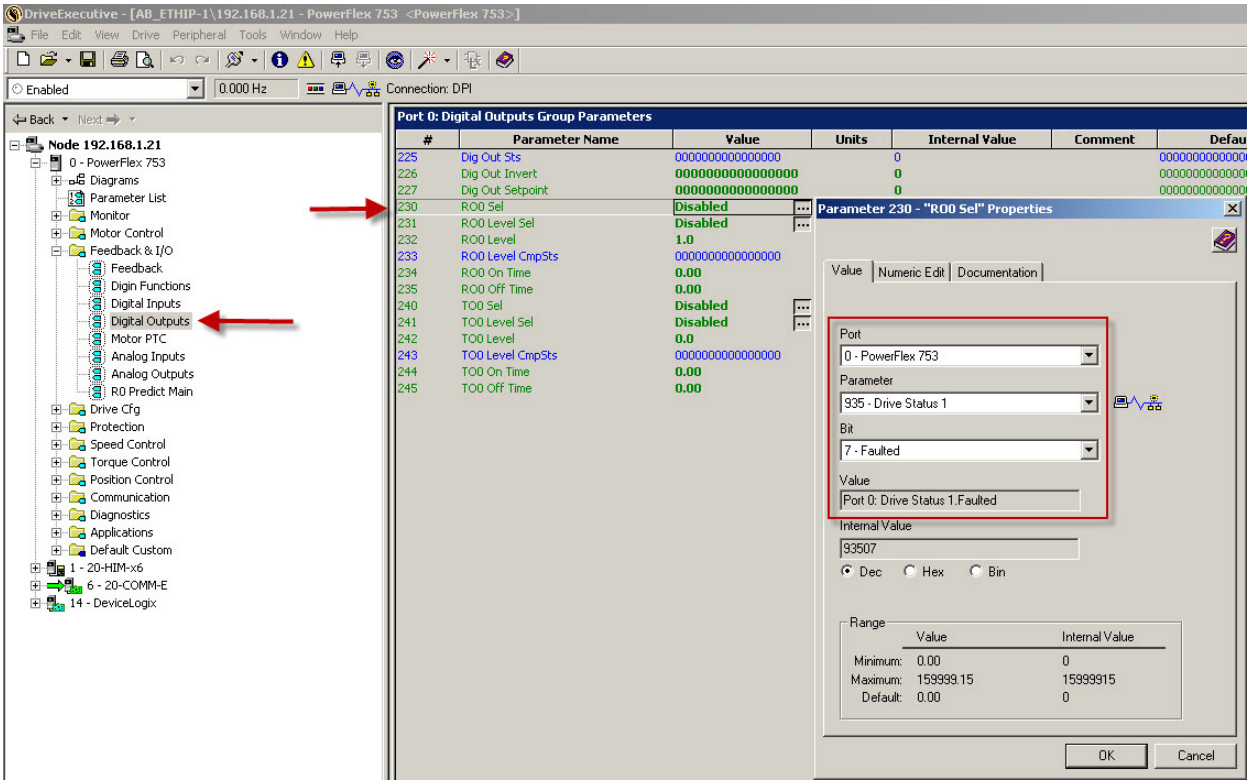

Example

For parameters that are not configurable through the parameter properties' "Value" tab pull-down graphic user interface (GUI), you can utilize the "Numeric Edit" tab to alternatively configure the digital output for a desired function.

Below is an example of a PowerFlex 755 drive utilizing a PowerFlex 750-Series option module's digital output "Sel" parameter being configured such that the output energizes when an alarm is present on one of the drive's inverter section.

You can see below that you cannot select Port 10, Inverter section in the Value tab pull-down GUI.

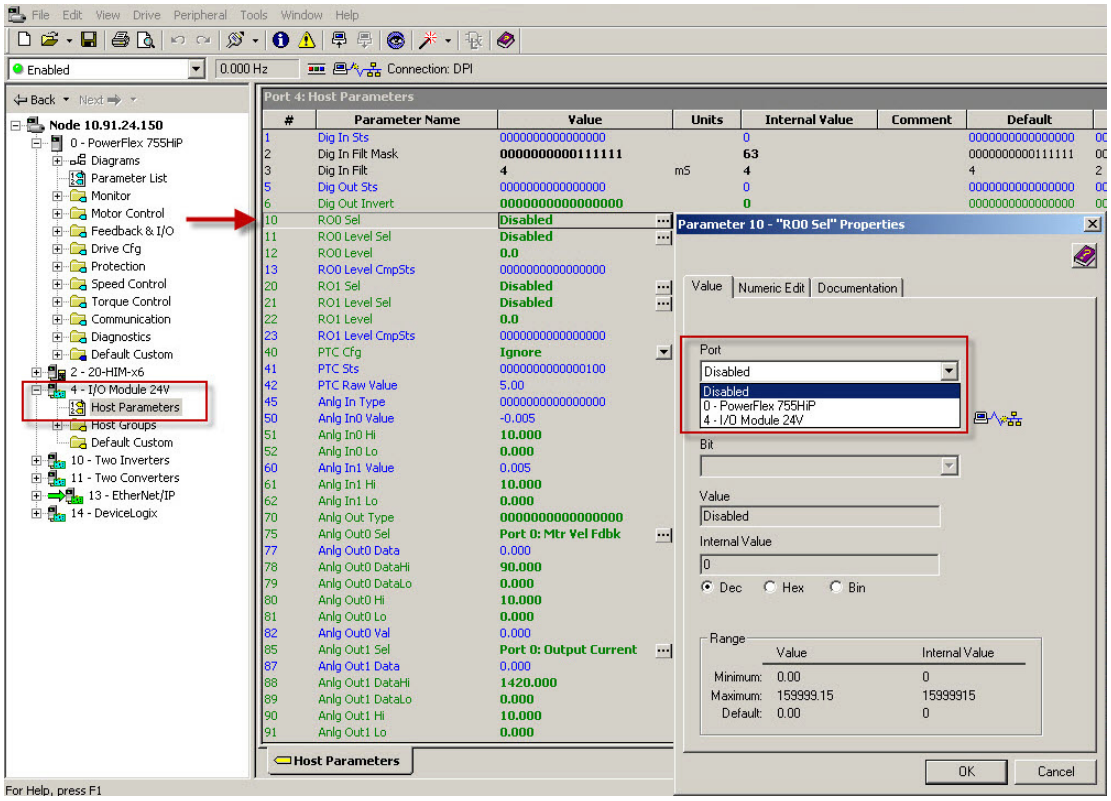

We look through the Port 10, Inverter section parameters and find that P13 [Alarm Status] Bit 0 shows if there is an active alarm on Inverter 1 section.

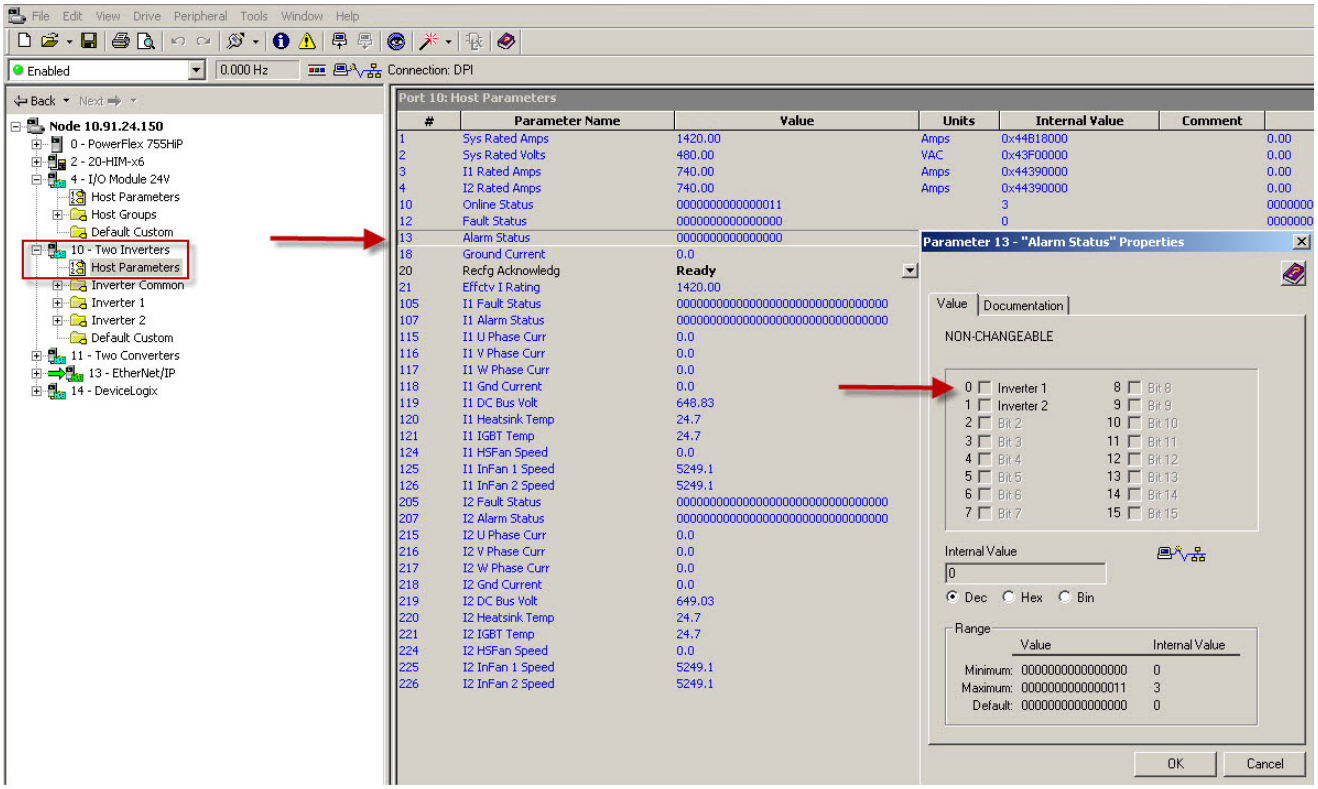

Within the Numeric Edit tab we can configure the digital output for the desired function. See below.

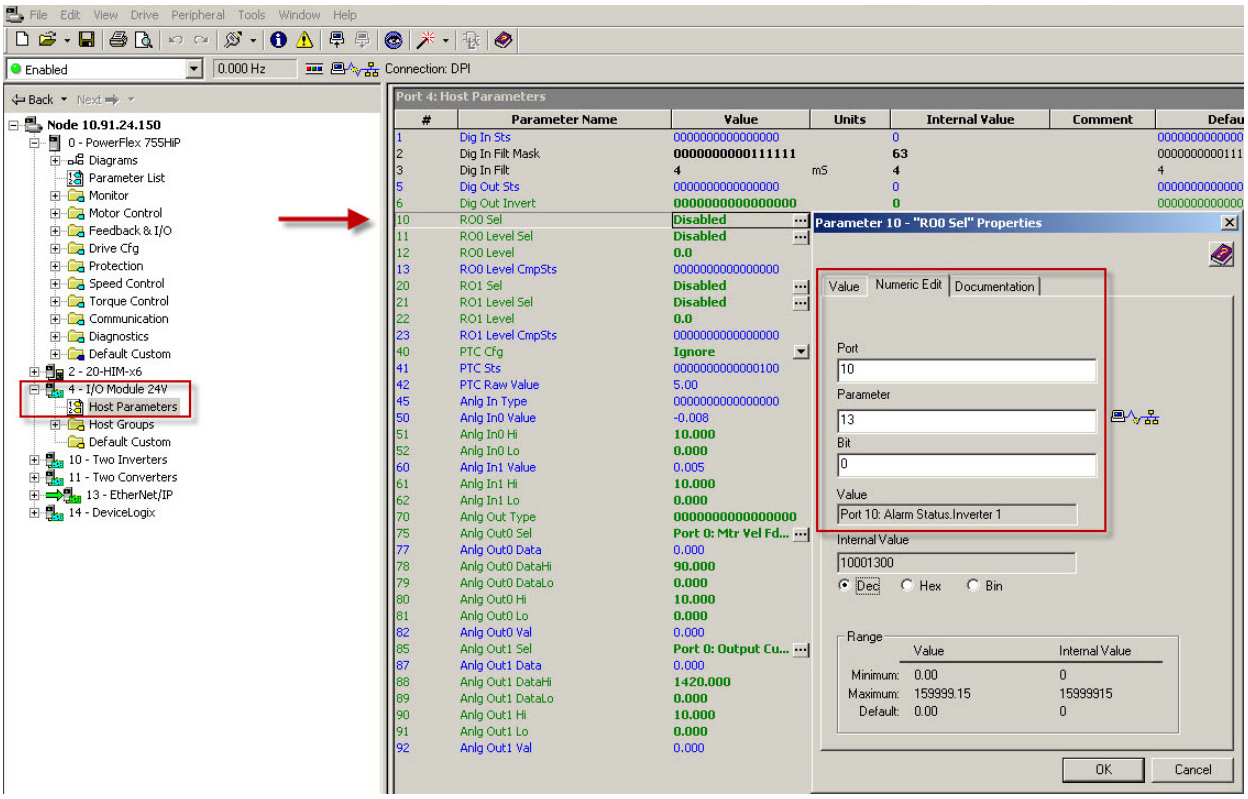

Once the parameter is configured within the Numeric Edit tab, you can Click OK, or you can go back to the Value tab to see what populates in the pull-down GUI, then Click OK.

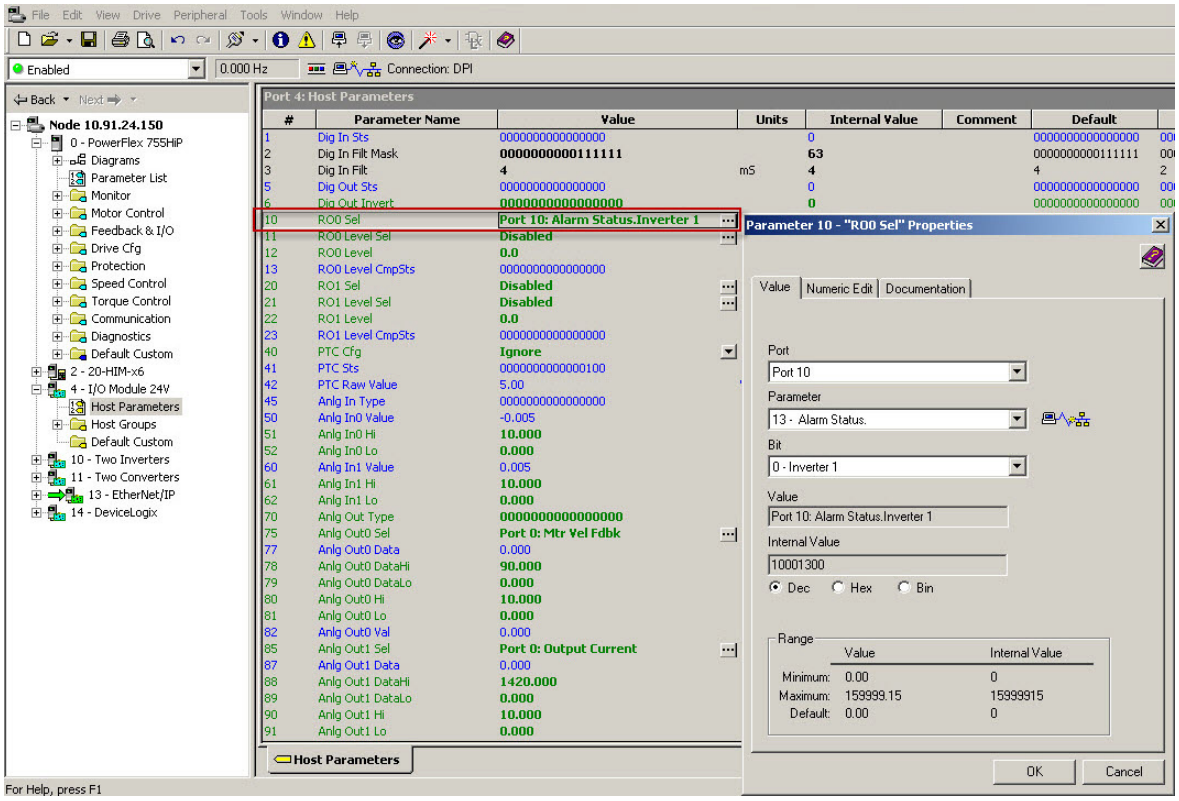

Level Conditions

A desired level function needs to be programmed into the “Level Sel” parameter, depending on the output being used. If the value for the specified function (frequency, current, and so forth) is greater than equal to or less than the programmed limit dictated by the “Level” parameter, the output activates or deactivates depending on how the “Sel” parameter is configured.

Notice that the Level Select parameters do not have units. The drive assumes the units and the minimum/maximum values from the selected parameter function. For example, if the “Level Sel” is programmed for P943 [Drive Temp Pct], which indicates operating temperature of the drive power section (heat sink), its units are in percentage of the maximum heat sink temperature with minimum/maximum values of -200/200 percent.

For the PowerFlex 750-Series drives utilizing an Option Module, the table below shows an overview of the selectable configurations for the drive's Digital Output "Level Sel" parameters.

Parameter No.	Parameter Name	Description
1	Output Frequency	Output frequency present at terminals T1, T2, and T3 (U, V & W).
2	Commanded SpdRef	Value of the active Speed/Frequency Reference.
3	Mtr Vel Fdbk	Estimated or actual motor speed, with feedback.
4	Commanded Trq	Final torque reference value after limits and filtering are applied. Percent of motor rated
5	Torque Cur Fdbk	Based on the motor, the amount of current that is in phase with the fundamental voltage component.
6	Flux Cur Fdbk	Amount of current that is out of phase with the fundamental voltage component.
7	Output Current	The total output current present at terminals T1, T2, and T3 (U, V & W).
8	Output Voltage	Output voltage present at terminals T1, T2, and T3 (U, V & W).
9	Output Power	Output power present at terminals T1, T2, and T3 (U, V & W).
10	Output Powr Fctr	Output power factor.
11	DC Bus Volts	DC bus voltage.
13	Elapsed MWH	Accumulated output energy of the drive.
14	Elapsed kWH	Accumulated output energy of the drive.
260(1)	Anlg In0 Value	Value of the Analog input after filter, square root, and loss action.
418	Mtr OL Counts	Accumulated percentage of motor overload.
419	Mtr OL Trip Time	Displays the inverse of the motor overload time.
558	MOP Reference	Value of the MOP (Motor Operated Potentiometer) Reference to be used as a possible source for P545 and P550.
707	Load Estimate	Displays an estimated load torque value for the drive.
940	Drive OL Count	Indicates power unit overload (IT) in percentage.
943	Drive Temp Pct	Indicates operating temperature of the drive power section (heat sink) in percentage of the maximum heat sink temperature.
1090	PID Ref Meter	Present value of the PI reference signal.
1091	PID Fdbk Meter	Present value of the PI feedback signal.
1092	PID Error Meter	Present value of the PI error.
1093	PID Output Meter	Present value of the PI output.
1567(2)	FrctnComp Out	Displays the torque reference output of the Friction Compensation function.
50(3)(4)	Anlg In0 Value	Value of the Analog input after filter, square root, and loss action.
60(3)(4)	Anlg In1 Value	Value of the Analog input after filter, square root, and loss action.
90 . . . 97(5)	DLX Real Out SP1 - SP8	Eight 32-bit Real scratchpad registers for DLX program output use.

(1) PowerFlex 753 drives only.
(2) PowerFlex 755 drives only.
(3) Option modules can be used in Ports 4, 5, and 6 of PowerFlex 753 drives.
(4) Option modules can be used in Ports 4, 5, 6, 7, and 8 of PowerFlex 755 drives.
(5) Port 14: DeviceLogix software parameters

Related PowerFlex 753 drives Level Select parameter information noted below.

Parameter No.	Parameter Name	Description
230	R00 Sel	Selects the source that energizes the relay output.
231	R00 Level Sel	Selects the source of the level that is compared.
232	R00 Level	Sets the level compare value.
233	R00 Level CmpSts	Status of the level compare, and a possible source for a relay or transistor output.
240	T00 Sel	Selects the source that energizes the relay or transistor output.
241	T00 Level Sel	Selects the source of the level that is compared.
242	T00 Level	Sets the level compare value.
243	T00 Level CmpSts	Status of the level compare, and a possible source for the transistor output.

Depending on the PowerFlex 750-Series Option Module(s) installed in the drive, related Level Select parameter information noted below.

Parameter No.	Parameter Name	Description
10	R00 Sel	Selects the source that energizes the relay output.
11	R00 Level Sel	Selects the source of the level that is compared.
12	R00 Level	Sets the level compare value.
13	R00 Level CmpSts	Status of the level compare, and a possible source for a relay or transistor output.
20	R01 Sel or T00 Sel	Selects the source that energizes the relay or transistor output.
21	R01 Level Sel or T00 Level Sel	Selects the source of the level that is compared.
22	R01 Level or T00 Level	Sets the level compare value.
23	R01 Level CmpSts or T00 Level CmpSts	Status of the level compare, and a possible source for a relay or transistor output.
30	T01 Sel	Selects the source that energizes the transistor output.
31	T01 Level Sel	Selects the source of the level that is compared.
32	T01 Level	Sets the level compare value.

Example

Below is an example of a PowerFlex 753 drive utilizing an embedded digital output Select, Level Select and Level parameters being configured such that the output energizes when the drive's operating temperature of the drive power section (heat sink) in percentage of the maximum heat sink temperature is greater than 50 percent.

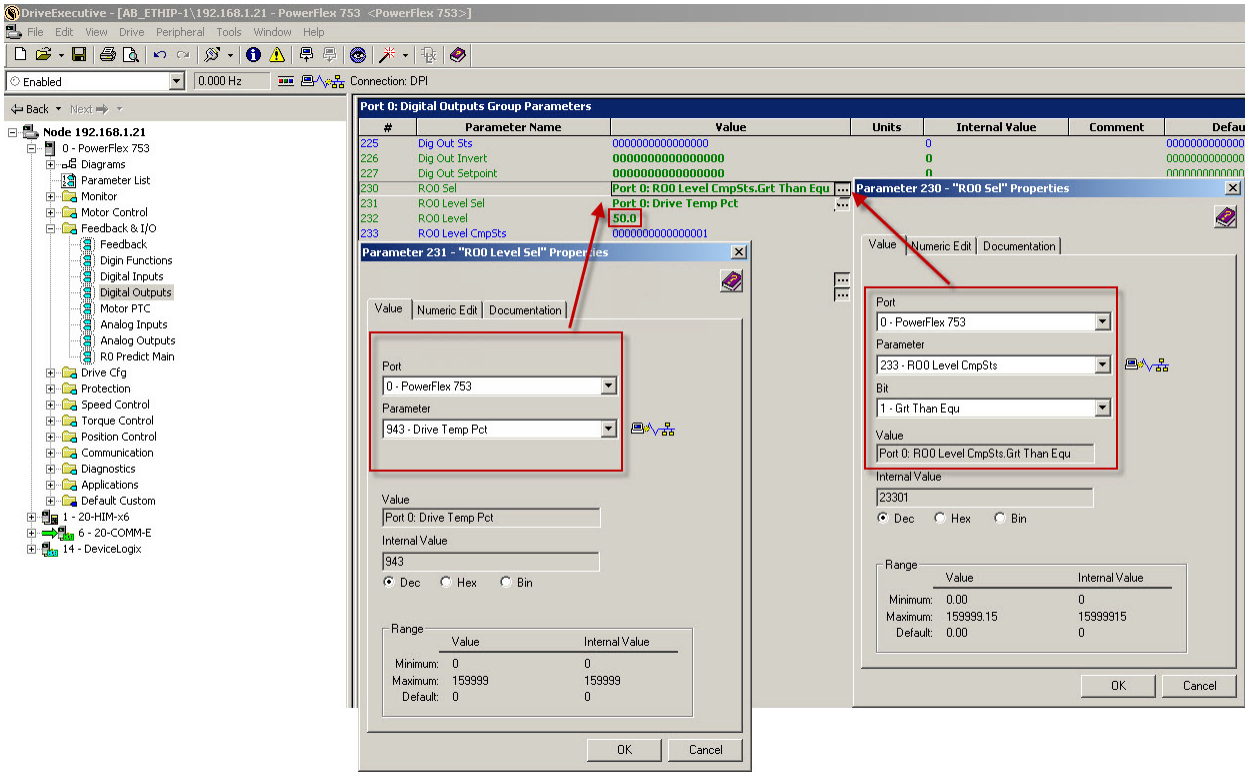

Controlled By Digital Input

A digital output can be programmed to be controlled by a digital input. For example, when the input is closed, the output is energized, and when the input is open, the output is de-energized. Note that the output is controlled by the state of the input, even if the input has been assigned a normal drive function (Start, Jog, and so forth).

Example

In this example, the drive is utilizing a 24V DC, Two Relay Option Module in Port 7. One of the drive's digital input functions, P164 [DI Run Forward] is programmed for Port 7: Digital In Sts.Input 1, with Option Module P10 [RO0 Sel] is programmed for Port 7: Dig In Sts.Input 1 and P20 [RO1 Sel] is programmed for Port 7: Dig In Sts.Input 3.

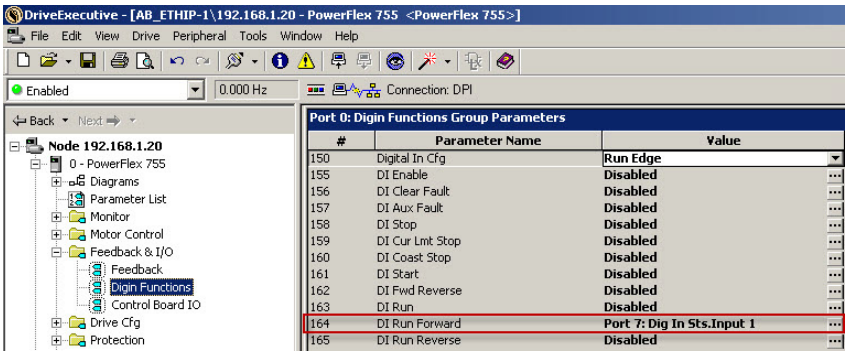

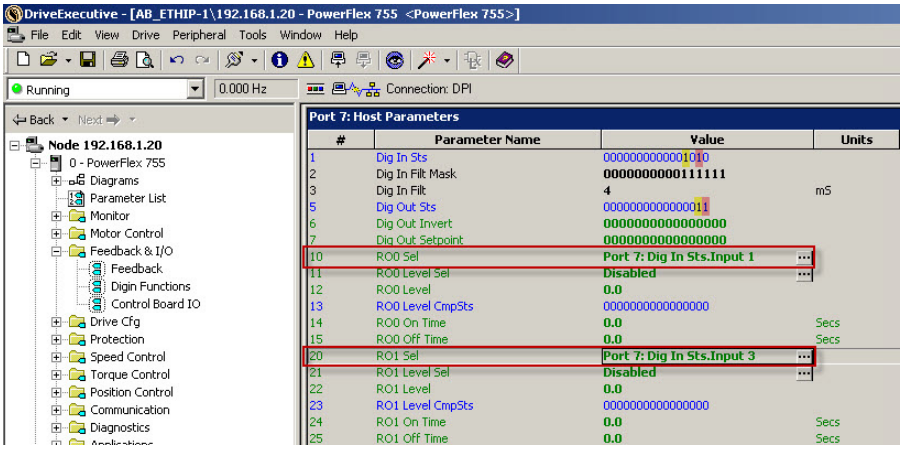

As you can see with the picture above, when the Digital Inputs 1 (pink highlight) and 3 (yellow highlight) are true (on) their respective Digital Outputs are true (on) as well.

Controlled by Network

This configuration is used when it is desired to control the digital outputs over network communication instead of a drive related function. In the case for the PowerFlex 753 embedded digital outputs, P227 [Dig Out Setpoint] is utilized and in the case for the PowerFlex 750-Series Option Module, P7 [Dig Out Setpoint] is utilized. To complete the configuration for control over a network, a datalink must be configured for the respective Digital Output Setpoint parameter.

Related PowerFlex 753 Setpoint parameter information noted below.

File	Group	No.	Display Name Full Name Description	Values	Read-Write	Data Type
FEEDBACK & I/O	Digital Outputs	227	753 **Dig Out Setpoint** Digital Output Setpoint Controls Relay or Transistor Outputs when chosen as the source. Can be used to control outputs from a communication device using DataLinks.		RO	16-bit Integer

Options	Reserved	Reserved	Reserved	Reserved	Reserved	Reserved	Reserved	Reserved	Reserved	Reserved	Reserved	Reserved	Reserved	Reserved	Trans Out 0	Relay Out 0
Default	0	0	0	0	0	0	0	0	0	0	0	0	0	0	0	0
Bit	15	14	13	12	11	10	9	8	7	6	5	4	3	2	1	0

0 = Condition False
1 = Condition True

Depending on the PowerFlex 750-Series Option Module(s) installed in the drive, related Setpoint parameter information noted below.

File	Group	No.	Display Name Full Name Description	Values	Read-Write	Data Type
I/O	Digital Outputs	7	**Dig Out Setpoint** Digital Output Setpoint Controls Relay or Transistor Outputs when chosen as the source. Can be used to control outputs from a communication device using DataLinks.		RW	16-bit Integer

Options	Reserved	Reserved	Reserved	Reserved	Reserved	Reserved	Reserved	Reserved	Reserved	Reserved	Reserved	Reserved	Reserved	Trans Out 1 (2)	Trans Out 0 (1)	Relay Out 0
Default	0	0	0	0	0	0	0	0	0	0	0	0	0	0	0	0
Bit	15	14	13	12	11	10	9	8	7	6	5	4	3	2	1	0

0 = Output De-energized
1 = Output Energized

(1) Bit 1 = "Trans Out 0" for I/O Module model 20-750-2263C-1R2T
= "Relay Out 1" for I/O Module models 20-750-2262C-2R and 20-750-2262D-2R
(2) Bit 2 is only used by I/O Module 20-750-2263C-1R2T

Example

For this example, our setup includes a PowerFlex 755 utilizing a 20-750-2262C-2R 24VDC I/O Option Module and a ControlLogix™ L63 processor. The drive's Option Module, P10 [RO0 Sel] is configured for Port 7: Dig Out Setpoint.Relay Out 0. We are utilizing the Logix Designer application, which includes the Drives Add-On Profiles (AOPs). This gives us the ability to communicate and control the PowerFlex 755 drive over its embedded ethernet port via a datalink P7 [Dig Out Setpoint], Relay Out 0.

Below is a picture of the PowerFlex 755 drive Datalink configuration.

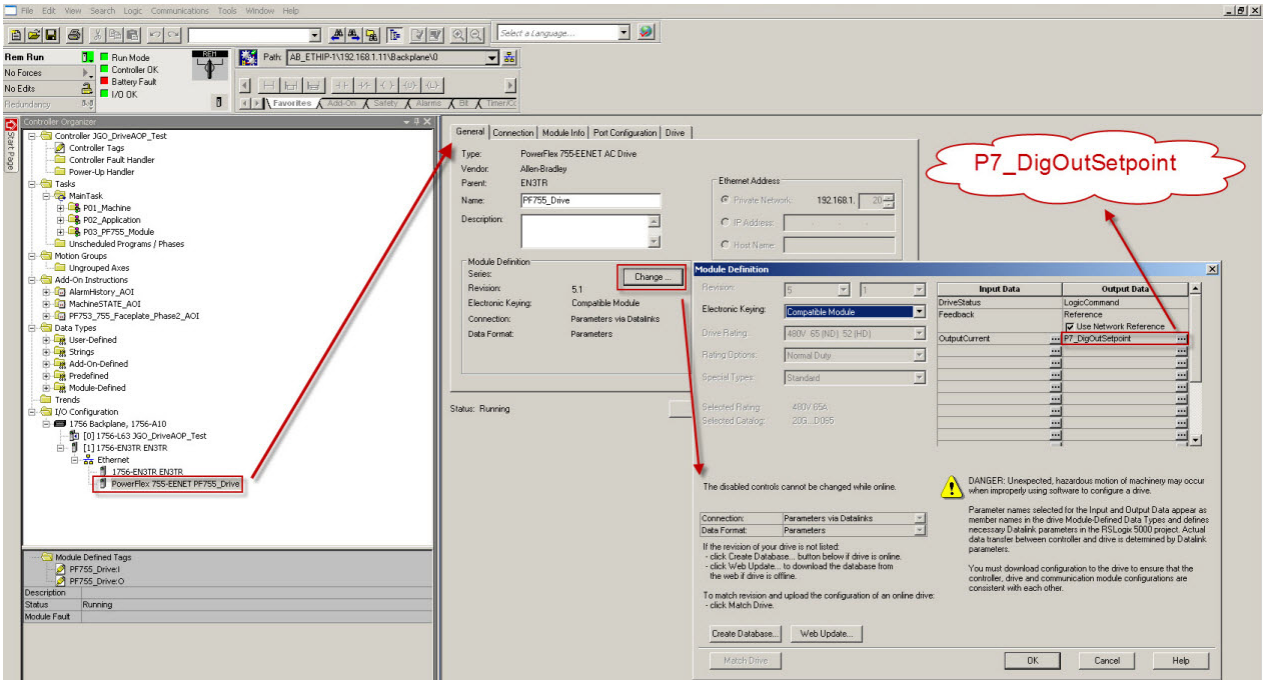

Below is a picture of the PowerFlex 755 drive Datalink configuration from DriveExecutive™.

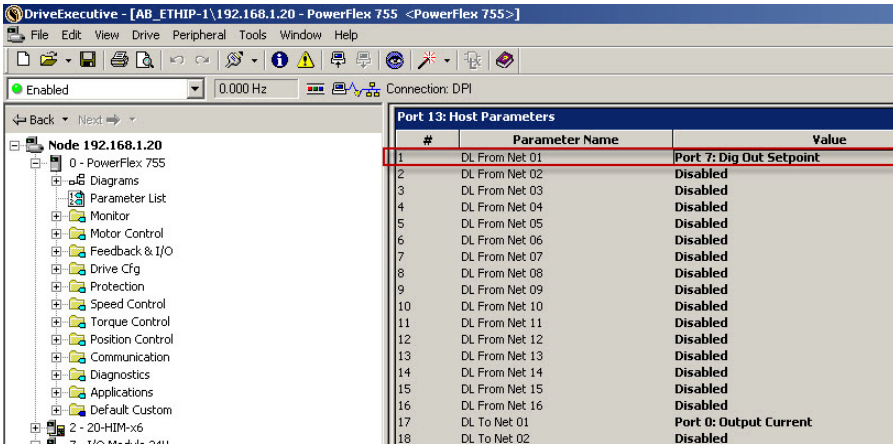

Utilizing the Drive Add-On Profiles and a datalink, we can use the created descriptive controller tag (highlighted below) to communicate over a network to control the relay output.

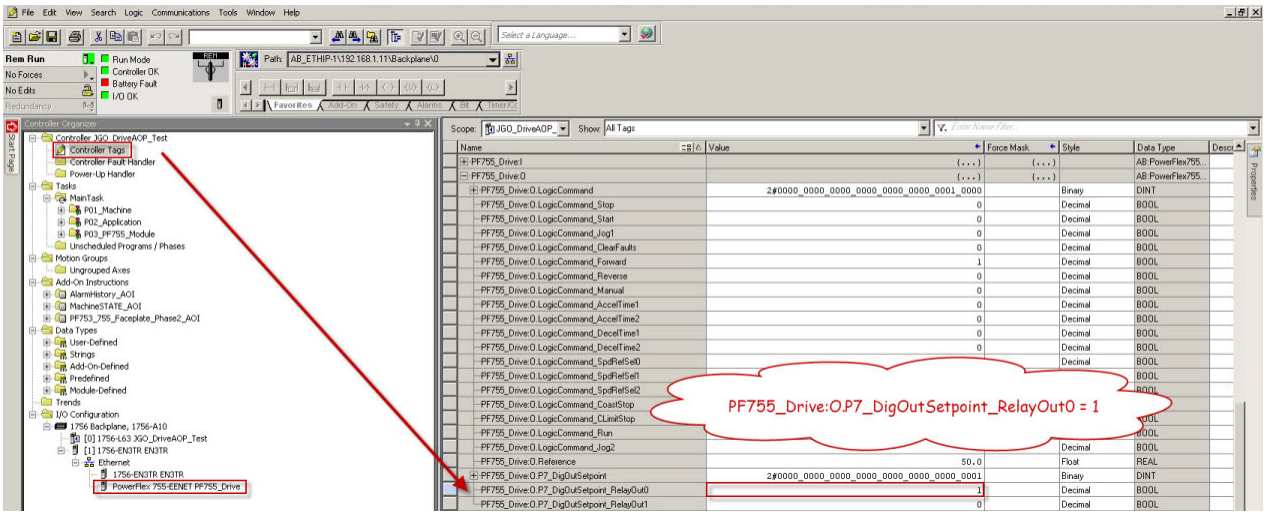

The picture below shows the result of controlling the digital output over the network (yellow highlight).

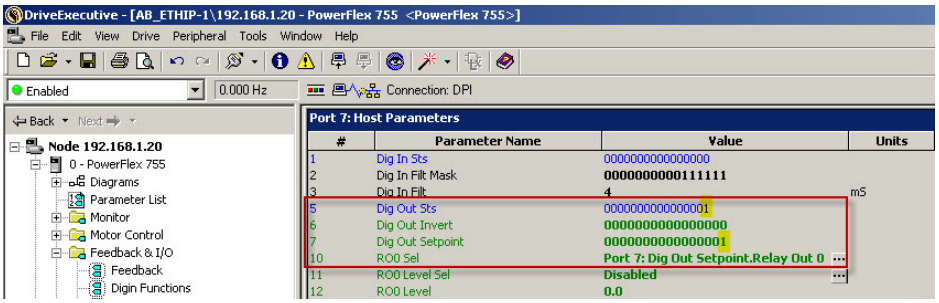

Controlled by DeviceLogix software

DeviceLogix software control technology provides you with the flexibility to customize a drive to more closely match your application needs. DeviceLogix software controls outputs and manages status information locally within the drive allowing you to operate the drive independently or complimentary to supervisory control helping to improve system performance and productivity. You can use the PowerFlex 750-Series DeviceLogix software to read inputs/write outputs and exclusively control the drive.

Example

In the example below, we are using two real world inputs, such as limit switches being wired into a PowerFlex 750-Series Option Module, and using a DeviceLogix software program to control a digital output.

The picture below shows the DeviceLogix software Digital Input configuration. P33 [DLX DIP 1] is configured for Port 7: Dig In Sts.Input 1 and P35 [DLX DIP 3] is configured for Port 7: Dig In Sts.Input 3. This setup lets us bring in two real world inputs into DeviceLogix software.

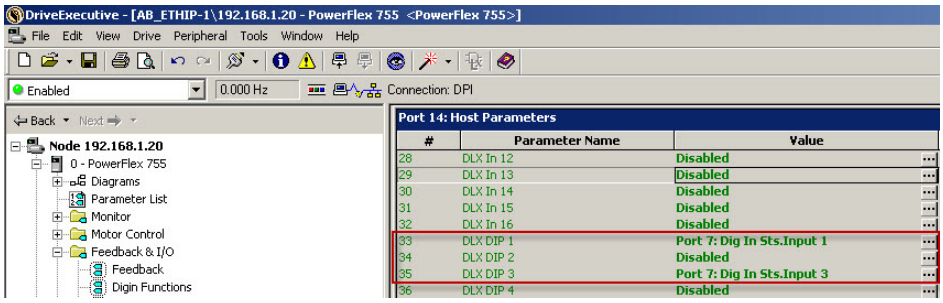

We then utilize a DeviceLogix software program so that when both Digital Input 1 and Digital Input 3 are true (on), the resultant is the DeviceLogix software Digital Output 1 (DOP 1) turns on.

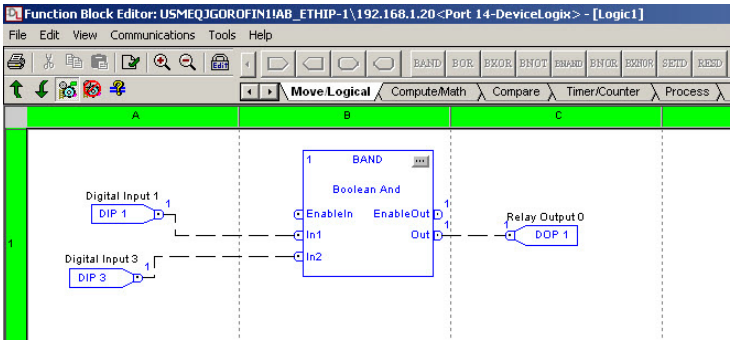

The picture below shows that the Option Module, P10 [RO0 Sel] is configured for DeviceLogix software Port 14: DLX DigOut Sts2.DLX DOPSts1. This links together the DeviceLogix software Digital Output 1 (DOP 1) to the drive's physical output, such that when the DOP 1 is high (on), the drive's Option Module relay output energizes.

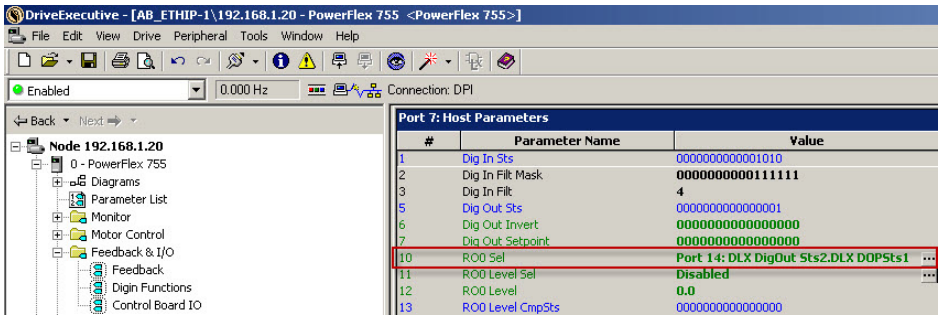

The picture below shows the status of the DeviceLogix software inputs and outputs via P49 [DLX DigIn Sts] and P51 [DLX DigOut Sts2].

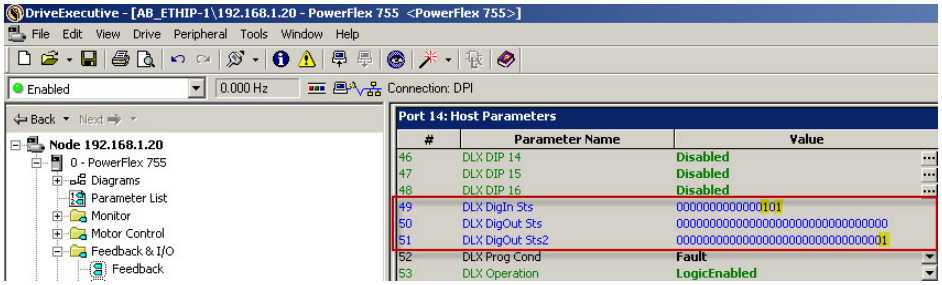

The picture below shows the status of the DeviceLogix software inputs and outputs via P1 [Dig In Sts] and P5 [Dig Out Sts].

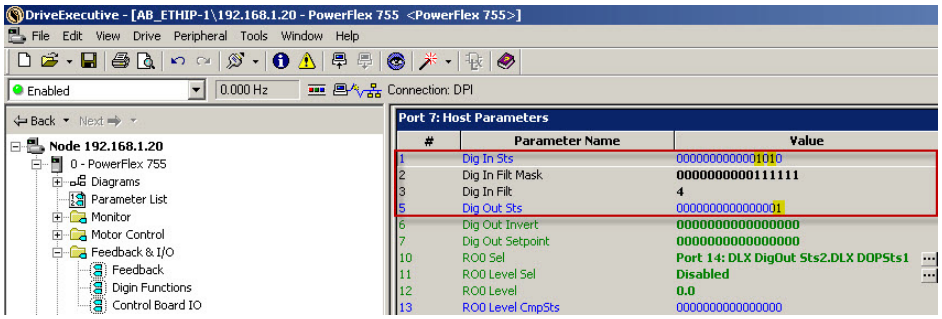

Invert

There is a logical invert function associated with the PowerFlex 750-Series drive's digital outputs. For the PowerFlex 753, it is configured by P226 [Dig Out Invert], and for the PowerFlex 750-Series Option Module, it is configured by P6 [Dig Out Invert]. This invert function changes the output status bit from a zero, false state, to a one, true state, and vice versa.

This logical invert function requires power to be applied to the drive's control module for the drive's logic to be active. This can be obtained from powering up the drive's control module by either applying power to the drive's input section or from an external 24VDC being wired into the Auxiliary Power Supply Option Module.

PowerFlex 753 Invert parameter information noted below.

File	Group	No.	Display Name Full Name Description	Values	Read-Write	Data Type
FEEDBACK & I/O	Digital Outputs	226	753 **Dig Out Invert** Digital Output Invert Inverts the selected digital output.		RO	16-bit Integer

Options	Reserved	Reserved	Reserved	Reserved	Reserved	Reserved	Reserved	Reserved	Reserved	Reserved	Reserved	Reserved	Reserved	Reserved	Trans Out 0	Relay Out 0
Default	0	0	0	0	0	0	0	0	0	0	0	0	0	0	0	0
Bit	15	14	13	12	11	10	9	8	7	6	5	4	3	2	1	0

0 = Condition False
1 = Condition True

Depending on the PowerFlex 750-Series Option Module(s) installed, Invert parameter information noted below.

File	Group	No.	Display Name Full Name Description	Values	Read-Write	Data Type
I/O	Digital Outputs	6	**Dig Out Invert** Digital Output Invert Inverts the selected digital output.		RW	16-bit Integer

Options	Reserved	Reserved	Reserved	Reserved	Reserved	Reserved	Reserved	Reserved	Reserved	Reserved	Reserved	Reserved	Reserved	Trans Out 1 (2)	Trans Out 0 (1)	Relay Out 0
Default	0	0	0	0	0	0	0	0	0	0	0	0	0	0	0	0
Bit	15	14	13	12	11	10	9	8	7	6	5	4	3	2	1	0

0 = Output Not Inverted
1 = Output Inverted

(1) Bit 1 = "Trans Out 0" for I/O Module model 20-750-2263C-1R2T.
= "Relay Out 1" for I/O Module models 20-750-2262C-2R and 20-750-2262D-2R.
(2) Bit 2 is used only by I/O Module 20-750-2263C-1R2T.

Example

In this example, the drive is utilizing a 24VDC, two relay Option Module in Port 7 with P10 [RO0 Sel] is programmed for Port 7: Dig In Sts.Input 1. Notice below when the Invert bit for Relay Out 0, when the input status is true (1), the digital output status bit is false (0).

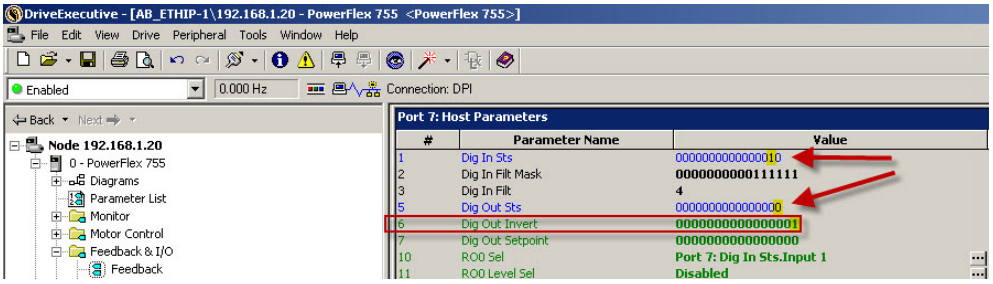

On/Off Time

Each digital output has two user-controlled timers associated with it. The On timer defines the delay time between a False-to-True transition (condition appears) on the output condition and the corresponding change in state of the digital output. The Off timer defines the delay time between a True-to-False transition (condition disappears) on the output condition and the corresponding change in the state of the digital output. Either timer can be disabled by setting the corresponding delay time to zero.

PowerFlex 753 On/Off parameters noted below.

Parameter No.	Parameter Name	Description
234	R00 On Time	Sets the "ON Delay" time for the digital outputs. This is the time between the occurrence of a condition and activation of the relay.
235	R00 Off Time	Sets the "OFF Delay" time for the digital outputs. This is the time between the disappearance of a condition and de-activation of the relay.
244	T00 On Time	Sets the "ON Delay" time for the digital outputs. This is the time between the occurrence of a condition and activation of the relay or transistor.
245	T00 Off Time	Sets the "OFF Delay" time for the digital outputs. This is the time between the disappearance of a condition and de-activation of the relay or transistor.

Depending on the PowerFlex 750-Series Option Module(s) installed, On/Off parameters noted below.

Parameter No.	Parameter Name	Description
14	R00 On Time	Sets the "ON Delay" time for the digital outputs. This is the time between the occurrence of a condition and activation of the relay.
15	R00 Off Time	Sets the "OFF Delay" time for the digital outputs. This is the time between the disappearance of a condition and de-activation of the relay.
24	R01 On Time or T00 On Time	Sets the "ON Delay" time for the digital outputs. This is the time between the occurrence of a condition and activation of the relay or transistor.
25	R01 Off Time or T00 Off Time	Sets the "OFF Delay" time for the digital outputs. This is the time between the disappearance of a condition and de-activation of the relay or transistor.
34	T01 On Time	Sets the "ON Delay" time for the digital outputs. This is the time between the occurrence of a condition and activation of the transistor.
35	T01 Off Time	Sets the "OFF Delay" time for the digital outputs. This is the time between the disappearance of a condition and de-activation of the transistor.

Whether a particular type of transition (False-to-True or True-to-False) on an output condition results in an energized or de-energized output depends on the output condition. If a transition on an output condition occurs and starts a timer, and the output condition goes back to its original state before the timer runs out, then the timer is aborted and the corresponding digital output does not change state.

Example

For example, in the diagram below, a digital output is configured for P935 [Drive Status 1], Bit 27 "Cur Limit," the On Time is programmed for two seconds and the Off Time is programmed for 0 seconds.

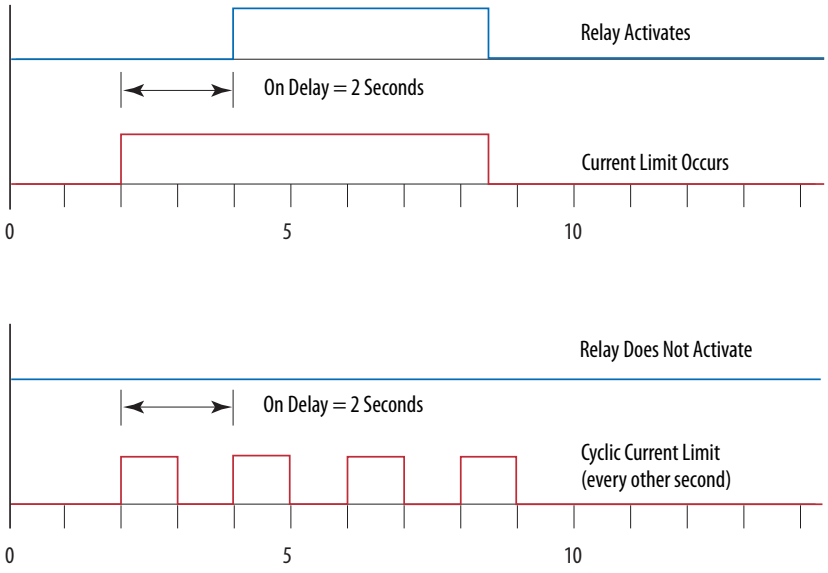

Status

The [Dig Out Sts] parameter displays the status of the digital outputs and can be used for troubleshooting the digital outputs. When the bit in associated with the digital output is on, this means that the logic in the drive is telling that digital output to turn on. When the bit associated with the digital input is off, this means that the logic in the drive is telling that digital output to turn off.

PowerFlex 753 related Status parameter information noted below.

File	Group	No.	Display Name Full Name Description	Values	Read-Write	Data Type
FEEDBACK & I/O	Digital Outputs	225	753 **Dig Out Sts** Digital Output Status Status of the digital outputs.		RO	16-bit Integer

Options	Reserved	Reserved	Reserved	Reserved	Reserved	Reserved	Reserved	Reserved	Reserved	Reserved	Reserved	Reserved	Reserved	Reserved	Trans Out 0	Relay Out 0
Default	0	0	0	0	0	0	0	0	0	0	0	0	0	0	0	0
Bit	15	14	13	12	11	10	9	8	7	6	5	4	3	2	1	0

0 = Condition False
1 = Condition True

File	Group	No.	Display Name Full Name Description	Values	Read-Write	Data Type
I/O	Digital Outputs	5	**Dig Out Sts** Digital Output Status Status of the digital outputs.		RO	16-bit Integer

Options	Reserved	Reserved	Reserved	Reserved	Reserved	Reserved	Reserved	Reserved	Reserved	Reserved	Reserved	Reserved	Reserved	Trans Out 1 (2)	Trans Out 0 (1)	Relay Out 0
Default	0	0	0	0	0	0	0	0	0	0	0	0	0	0	0	0
Bit	15	14	13	12	11	10	9	8	7	6	5	4	3	2	1	0

0 = Output De-energized
1 = Output Energized

(1) Bit 1 = "Trans Out 0" for I/O Module model 20-750-2263C-1R2T.
= "Relay Out 1" for I/O Module models 20-750-2262C-2R and 20-750-2262D-2R.
(2) Bit 2 is used only by I/O Module 20-750-2263C-1R2T.

Block Diagrams

Figure 11 - PowerFlex 753 Drive

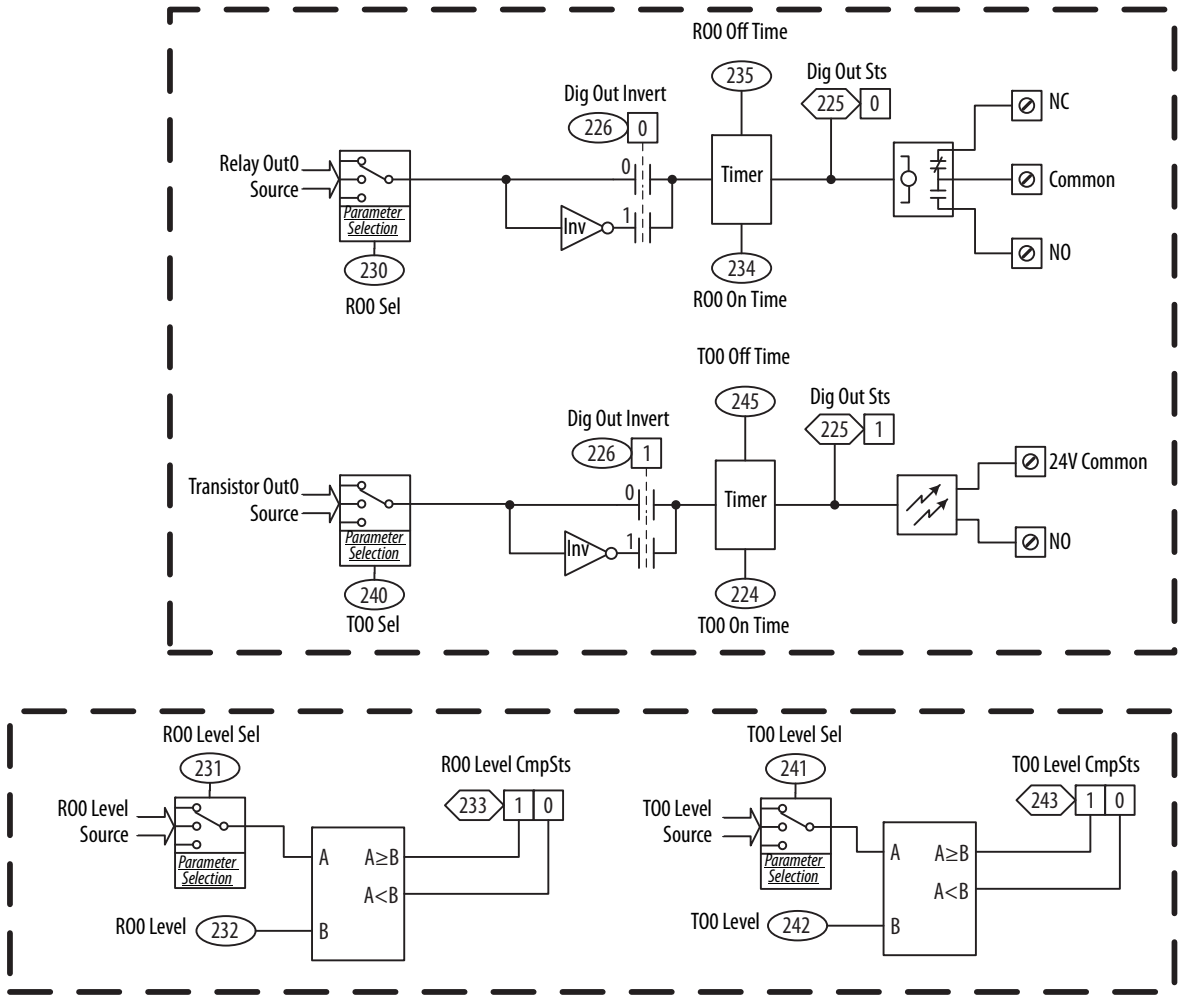

Figure 12 - PowerFlex 750-Series Option Module

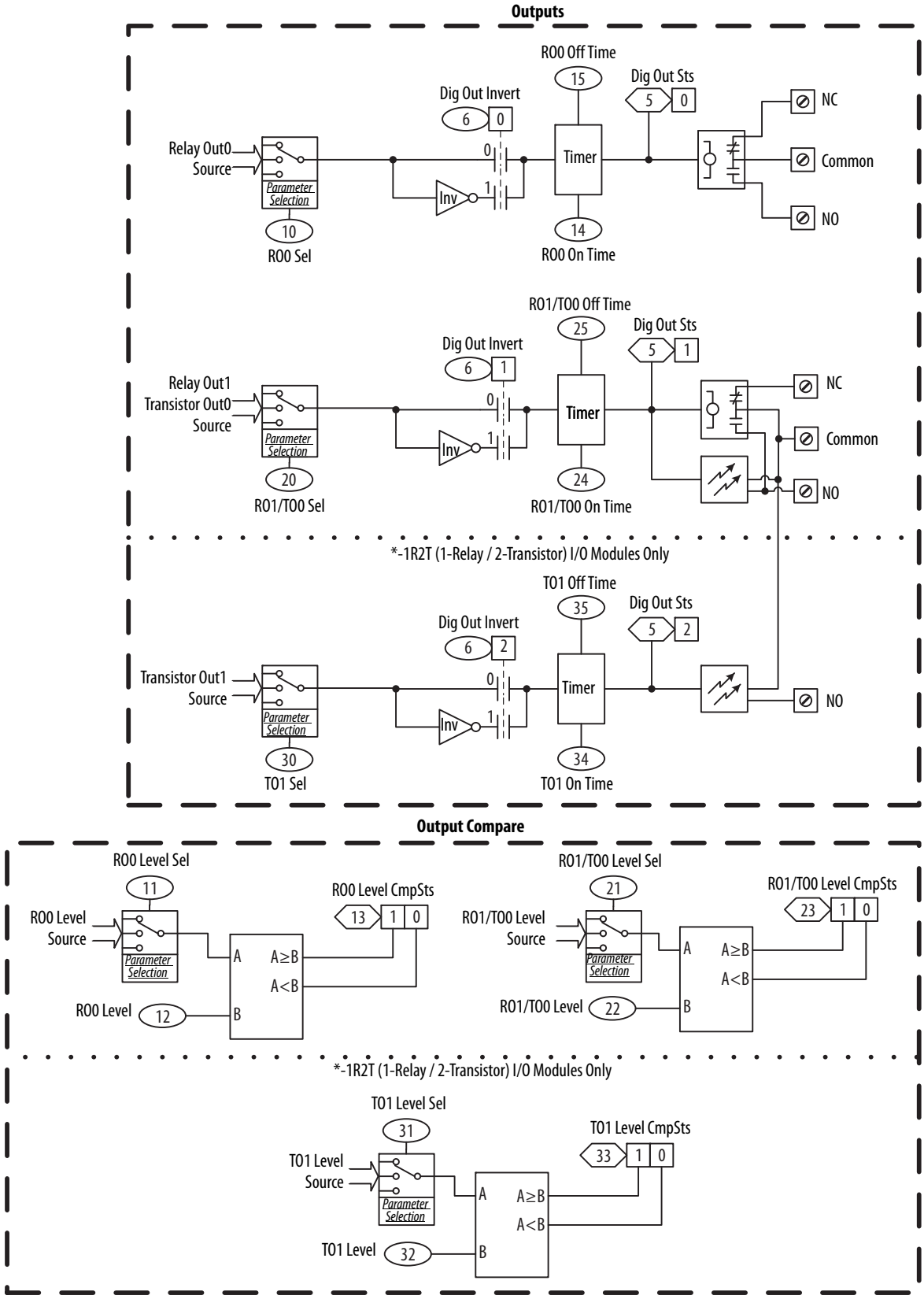

PTC Motor Thermistor Input

A PTC (Positive Temperature Coefficient) sensing device, also known as a motor thermistor, embedded in the motor windings can be monitored by the drive for motor thermal protection. The motor windings are typically equipped with three PTC sensors (one per phase) wired in series as shown in schematic below. The miniaturized sensors have a low resistance below the rated response temperature, and increase their resistance (exponentially) in the rated response temperatures range. The rated response temperature is defined by the PTC sensor. Motors with different thermal insulation classes (Class F or H) are equipped with different PTC sensors, each with its own response temperature such as 120, 130, and 140 Degrees C. Unlike the PT100 or KTY thermistors, which have a linear relation between temperature and resistance, the PTC thermistor is used for a temperature level indication rather than a direct measurement in degrees C.

Figure 13 - PTC characteristic temperature/resistance curve according to IEC-34-11-2

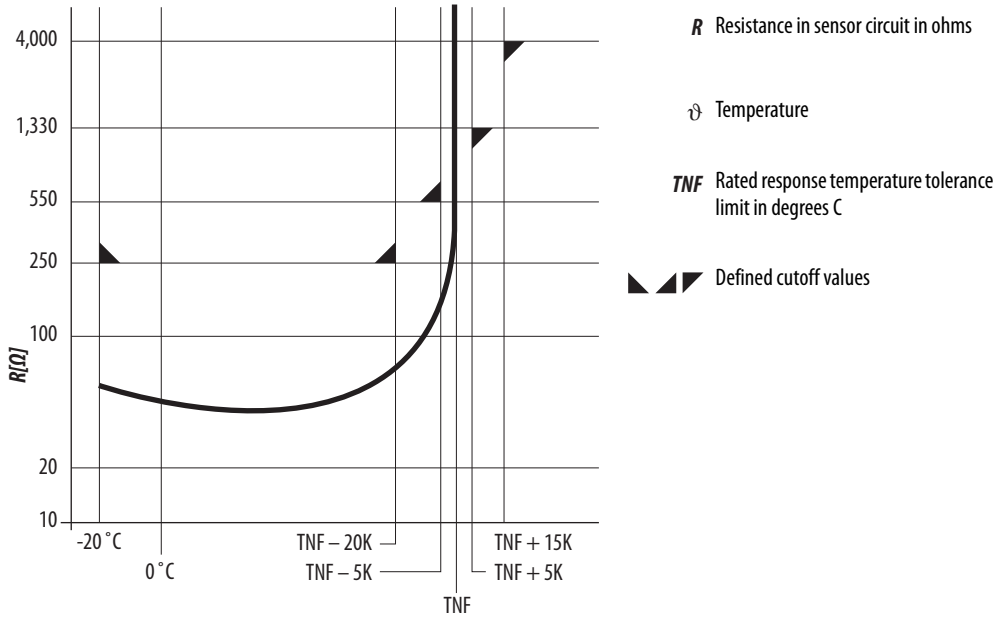

Hardware and Connection

The PTC thermistor leads are connected to the PTC+ and PTC- terminals of either the PowerFlex 753 main control board TB1 or to TB1 of one of the optional I/O cards, catalog numbers 20-750-2262C-2R, 20-750-2263C-1R2T, 20-750-2262D-2R.

PTC thermistors of ATEX certified motors connect to the ATEX option module, 20-750-ATEX, which is mounted onto one of the 11-Series I/O cards, catalog numbers 20-750-1132C-2R, 20-750-1133C-1R2T, 20-750-1132D-2R.

Figure 14 - PTC Connection

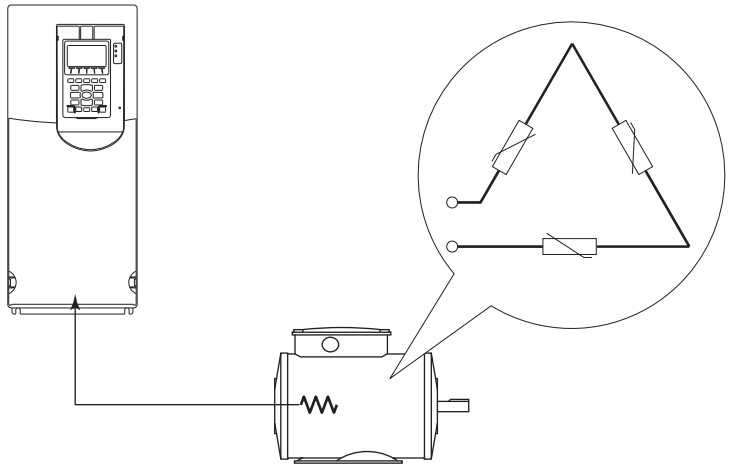

Configuration with PTC connected to PowerFlex 753 Main Control Board

Port 0: P250 [PTC Cfg] = 0 “Ignore,” 1 “Alarm,” 2 “Flt Minor,” 3 “FltCoastStop,” 4 “Flt RampStop,” or 5 “Flt CL Stop”

Status is shown in Port 0: P251 [PTC Sts]

Configuration with Optional I/O Board

Port X (I/O Module): P40 [PTC Cfg] = 0 “Ignore,” 1 “Alarm,” 2 “Flt Minor,” 3 “Flt CoastStop,” 4 “Flt RampStop,” or 5 “Flt CL Stop”

Status is shown in Port X (I/O Module): P41 [PTC Sts] and Port X (I/O Module): P42 [PTC Raw Value]

Configuration with 11-Series I/O module fitted with ATEX Option

Status is shown in Port X (I/O Module): P41 [ATEX Sts] The fault action is not configurable when the ATEX module is used.

Fault or Alarm Operation

The reaction to an increased PTC resistance depends on the respective PTC configuration, such as alarm or fault. When the ATEX module is used, the result is always fault. When the PTC resistance exceeds 3.2 kOhm a fault or alarm is triggered. The function is reset when the resistance drops below 2.2 kOhm. A short circuit is detected when the resistance value drops below 100 Ohm. If the drive was configured to fault then the fault must be cleared once the PTC function is reset (value is below threshold).

Diagnostics and Protection

Topic	Page
Alarms	155
Current Limit	156
DC Bus Voltage/Memory	158
Drive Overload	158
Faults	162
Input Phase Loss Detection	166
Motor Overload	168
Overspeed Limit	172
Password	173
Real Time Clock	174
Reflected Wave	179
Security	185
Shear Pin	188
Slip Compensation	192
Slip Regulator	194

Alarms

Alarms are indications of situations that are occurring within the drive or application that are annunciated to the user. These situations can affect the drive operation or application performance. Conditions such as power loss or analog input signal loss can be detected and displayed for drive or operator action.

There are two types of alarms.

- Type 1 Alarms are conditions that do not cause the drive to trip or shut down, but, if the condition persists, it can lead to a drive fault.
- Type 2 Alarms are conditions that are caused by improper programming and prevent the drive from starting until programming is corrected. An example of a Type 2 alarm is when a start function is assigned to a digital input without a stop function also assigned to a digital input.

The Troubleshooting section of the PowerFlex 750-Series Programming Manual, publication 750-PM001, contains a list of drive-specific faults and alarms, their type of fault or alarm, and what action can be configured if applicable.

In a Control Logix program do not set P410 [Motor OL Actn] to 1 "Alarm." There is an anomaly in drives with firmware version 8.001 or earlier that prevents an overload from being asserted in P959 [Alarm Status A] and in P937 [Condition Sts 1] Bit 2 "Motor OL." Neither of these parameters are used under this circumstance to initiate any programmed alarm routine.

Leaving P410 [Motor OL Actn] at one of the fault settings or Flash Updating the drive to a firmware version greater than 8.001 resolves this anomaly. Instructions on Flash Updating drives are provided in drive firmware Release Notes publications.

Current Limit

There are five ways that the drive can protect itself from over current or overload situations.

Method	Description
Hardware Over Current	This is a feature that instantly faults the drive if the output current exceeds this value. The value is fixed by hardware and is typically 250% of drive rated amps. The fault code for this feature is F12 "HW OverCurrent." This feature cannot be defeated or mitigated.
Software Over Current	This protection mode occurs when peak currents do not reach the hardware over current value and are sustained long enough and high enough to damage certain drive components. If this situation occurs, the drives protection scheme causes an F36 "SW OverCurrent" fault. The point at which this fault occurs is fixed and stored in drive memory.
Software Current Limit	This is a feature that attempts to reduce current by folding back output voltage and frequency if the output current exceeds a programmable value. P422/423 [Current Limit 1/2], selected by P421 [Current Lmt Sel], are programmable up to 150% of drive rating. The reaction to exceeding this value is programmable with Shear Pin fault. Enabling this parameter creates an F61 or F62 "Shear Pin n" fault. Disabling this parameter causes the drive to use fold back to attempt load reduction.
Heat Sink Temperature Protection	The drive constantly monitors the heat sink temperature. If the temperature exceeds the drive maximum, a F8 "Heatsink OvrTemp" fault occurs. The value is fixed by hardware at a nominal value of 100 degrees C. This fault is generally not used for over current protection due to the thermal time constant of the heat sink. It is an overload protection.
Drive Overload Protection	Refer to Drive Overload on page 158.

Figure 15 - Current Limit Frequency Fold-back Examples

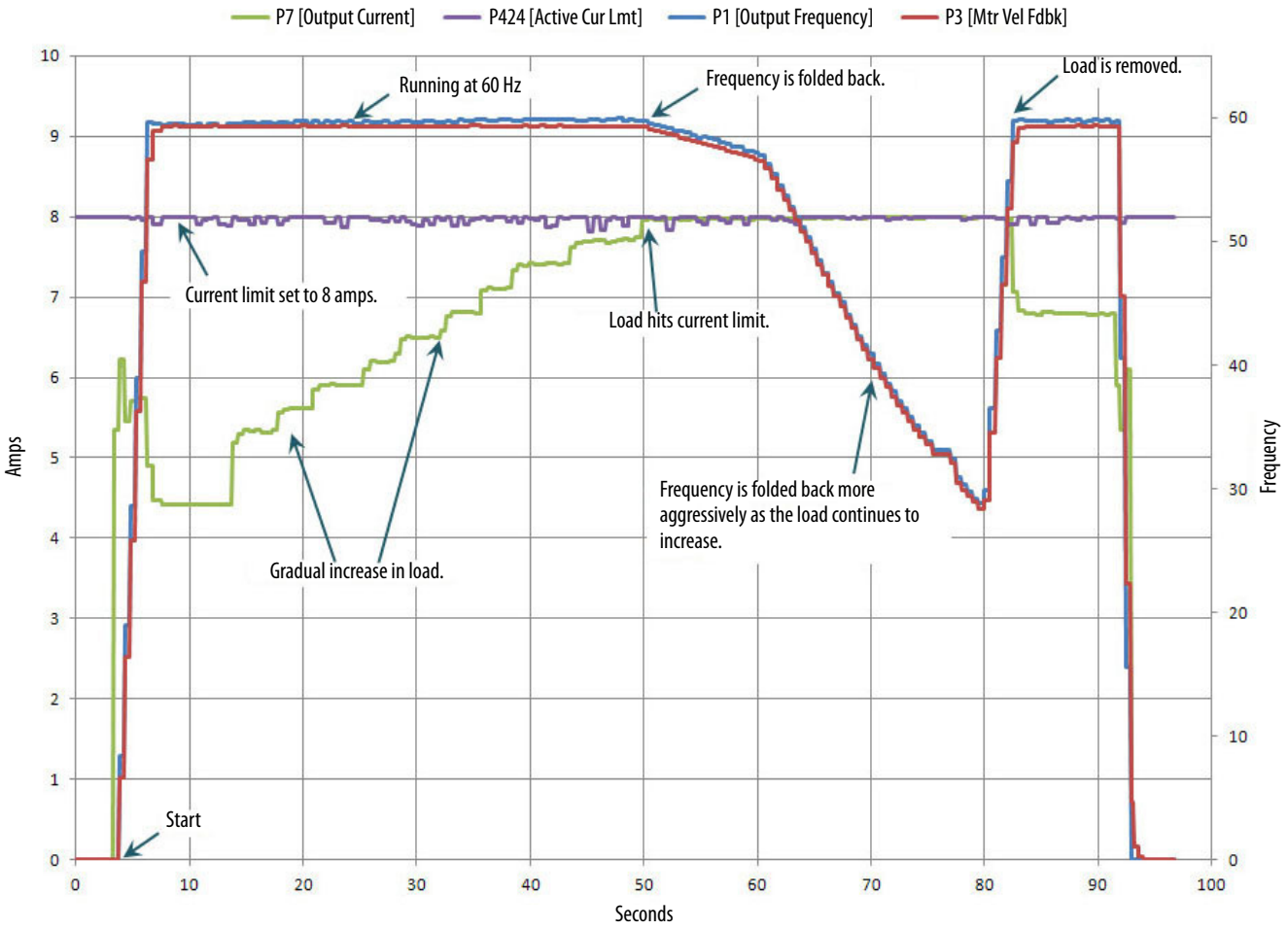

DC Bus Voltage/Memory

P11 [DC Bus Volts] is a measurement of the instantaneous value. P12 [DC Bus Memory] is a heavily filtered value or average bus voltage. Just after the pre-charge relay is closed during initial powerup, bus memory is set equal to bus voltage. Thereafter it is updated to the six-minute average of the instantaneous DC bus voltage.

Bus memory is used as a comparison value to sense a power loss condition. If the drive enters a power loss state, the bus memory is also used for recovery (for example pre-charge control or inertia ride through) upon return of the power source. Update of the bus memory is blocked during deceleration to prevent a false high value caused by a regenerative condition.

Drive Overload

The purpose of the drive thermal overload feature is to protect the drive's power module when operation exceeds the design limitations. This feature does not protect the motor, this is handled by the motor overload protection feature (see Motor Overload on page 168).

The drive thermal overload function utilizes two methods to protect the drive. Inverse time protection based on the average output current and a thermal manager that models the temperature of the IGBTs based on measured power module temperature and operating conditions. Each method can reduce the PWM switching frequency or reduce current limit. When rated conditions are exceeded, even after applying one of the measures mentioned above, and the load on the drive is not reduced, a F64 "Drive Overload" fault is generated. The fault detection mechanism cannot be disabled. Only the ability to fold back PWM frequency and current limit can be disabled.

The drive monitors the temperature of the power module based on a measured temperature and a thermal model of the power module. As the temperature rises and P940 [Drive OL Count] increases, the drive can lower the PWM frequency to decrease the switching losses in the power module. If the temperature continues to rise, the drive can reduce current limit to try to decrease the load. This is the factory default response, configurable by P420 [Drive OL Mode], to increasing drive temperature. If the drive temperature becomes critical, P940 [Drive OL Count] = 100%, the drive faults.

If the drive is operated in a low ambient temperature condition the drive can exceed rated levels of current before the monitored temperature becomes critical. To guard against this situation the drive thermal overload also includes an inverse time algorithm. When this scheme detects operation beyond rated limits, current limit can be reduced or a fault can be generated.

Inverse Time Protection

The following curves show an example of the boundary operations of a 20G1AxC770 drive. The curve is defined by the drive's continuous rating and the respective overload capacities. These are voltage class and duty rating dependant and are configurable by P305 [Voltage Class] and P306 [Duty Rating]. This particular example has six different overload ratings.

- Low Voltage/Normal Duty or High Voltage/Normal Duty
- Low Voltage/Heavy Duty or High Voltage/Heavy Duty
- Low Voltage/Light Duty or High Voltage/Light Duty
  Light Duty is only available to frame 8 and larger drives.

If the load on the drive exceeds the level of current as shown on one of the curves, the inverse time protection increments the overload counter. Current limit can fold back to 100% of the drive rating when the drive over load count reaches 97.35% until the 10/90 or 5/95 duty cycle has been achieved. For example, 60 seconds at 110% is followed by 9 minutes at 100%, and 3 seconds at 150% is followed by 57 seconds at 100%. With the threshold for where to take action slightly above the rated level the drive only folds back when drive ratings are exceeded. If fold back of current limit is not enabled in P940 [Drive OL Mode], an F64 "Drive Overload" fault occurs when operation exceeds the rated levels.

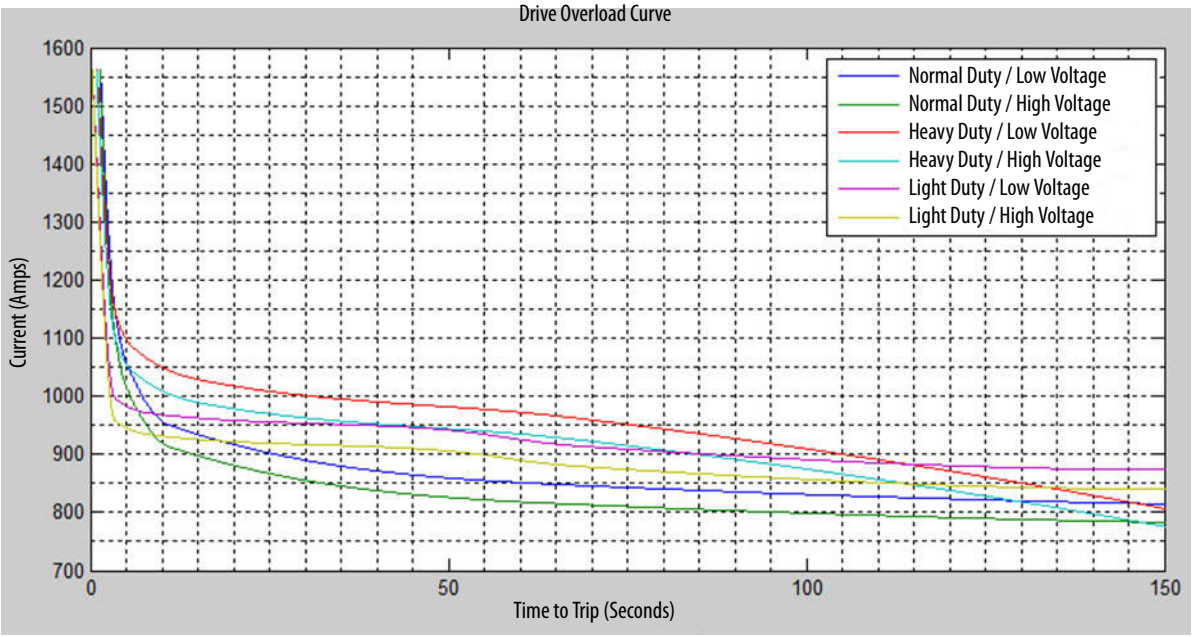

Normal Duty and Heavy Duty Operation

Applications require different amounts of overload current. Sizing a drive for Normal Duty provides 110% for 60 seconds and 150% for 3 seconds. For a heavy duty application, one larger drive rating than the motor is used and therefore provides a larger amount of overload current in comparison to the motor rating. Heavy duty sizing provides at least 150% for 60 seconds and 180% for 3 seconds. These percentages are with respect to the connected motor rating.

Thermal Manager

The thermal manager assures that the thermal ratings of the power module are not exceeded. The operation of the thermal manager can be thought of as a function block with the inputs and outputs as shown below.

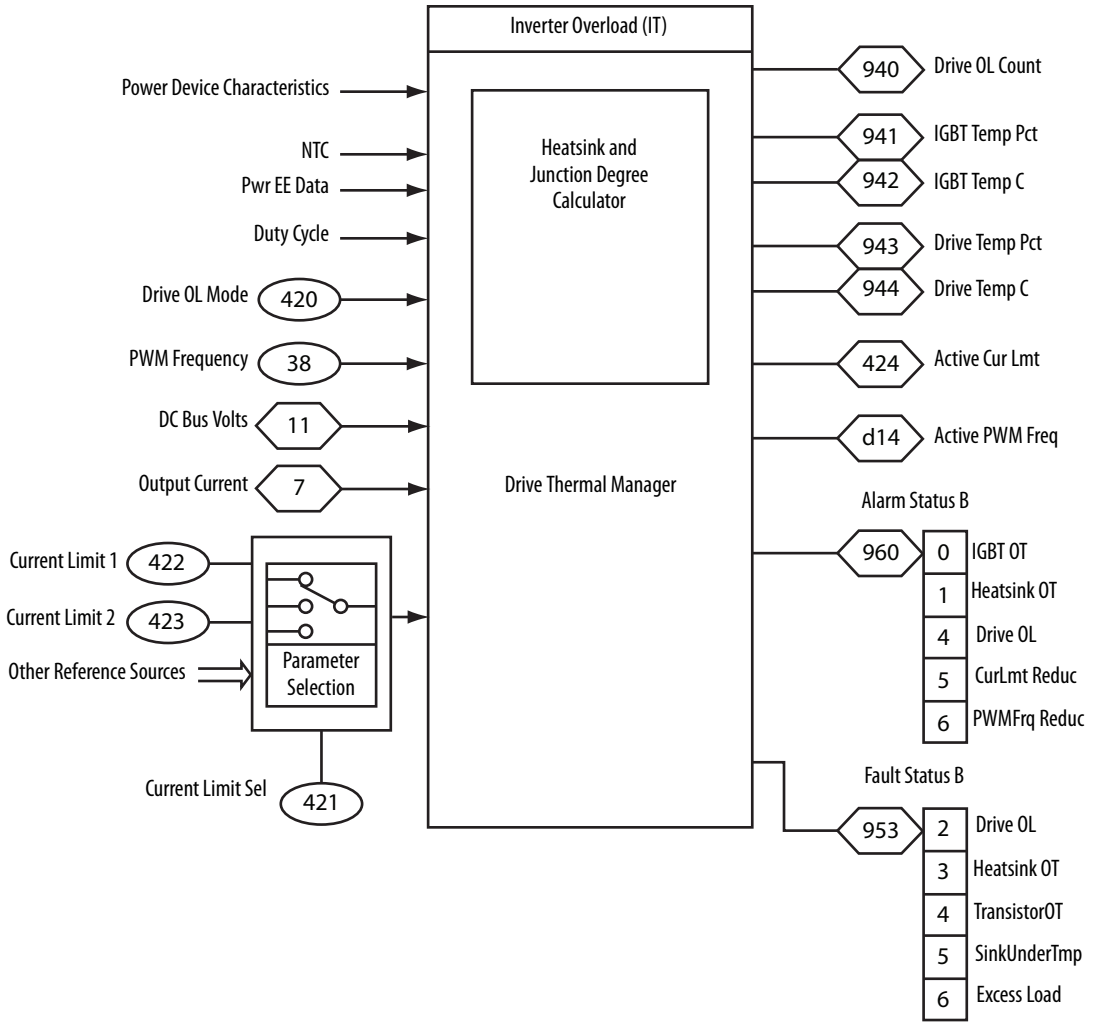

The following is a generalization of the calculations done by the thermal manager. The IGBT junction temperature is calculated based on the measured

drive temperature and a temperature rise that is a function of operating conditions. When the calculated junction temperature reaches a maximum limit, the drive faults. This fault cannot be disabled. This maximum junction temperature is stored on the power board EEPROM along with other information to define the operation of the drive overload function. These values are not user adjustable. In addition to the maximum junction temperature, there are temperature thresholds that select the points at which the PWM frequency begins to fold back, and at which current limit begins to fold back. P960 [Alarm Status B] alarm bits provide status as to when the fold back points are being reached regardless of whether or not the drive is configured to fold back. Bit 6 "PWMFrq Reduc" is the alarm bit for PWM fault and is 10 °C (50 °F) below the fault level. Bit 5 "CurLmt Reduc" is the alarm bit for current limit fold back and is 5 °C (41 °F) below the fault level. The over temperature fault level is reduced when running at output frequencies lower than 5 Hz.

Configuration

P420 [Drive OL Mode] lets the user select the action to perform with increased current or drive temperature. When this parameter is set to option 0 "Disabled," the drive will not modify the PWM frequency or current limit. When set to 2 "Reduce PWM" the drive only modifies the PWM frequency. This is typically used on hoisting applications. Option 1 "Reduce CLmt" only modifies the current limit. When setting this parameter to 3 "Both-PWM 1st" the drive modifies the PWM frequency first and then the current limit, if necessary, to keep the drive from faulting with a F64 "Drive Overload" or F8 "Heatsink OvrTemp" fault.

Temperature Display

The drive temperature is measured (NTC on the heat sink) and displayed as percentage of drive thermal capacity in P943 [Drive Temp Pct] and IGBT thermal capacity in P941 [IGBT Temp Pct]. These two parameters are normalized to the thermal capacity of the drive, which is frame dependent, and displays thermal usage in percent of maximum (100% = drive Trip). The heat sink temperature, P944 [Drive Temp C], and IGBT temperature, P942 [IGBT Temp Pct], in degrees C are also provided as test points. These cannot directly be related to a trip point as the maximums are defined as a percent.

Low Speed Operation

When operation is below 5 Hz, the IGBT duty cycle is such that heat builds up more rapidly in the power device. The thermal manager increases the calculated IGBT temperature at low output frequencies and causes corrective action to take place sooner. Consult technical support when prolonged operation at low output frequencies is required so proper drive derating can be applied. Also consider that when a drive is in current limit the output frequency is reduced to try to reduce the load. This works fine for a variable torque load, but for a constant torque load reducing the output frequency does not lower the current (load). Lowering current limit on a constant torque load pushes the drive down to a region where the thermal issue becomes worse. In this situation the thermal manager increases the calculated losses in the power module to track the worst case. So if the thermal manager normally provides 150% for 3 seconds at high speeds, it can only provide 150% for one second before generating a fault at low speeds. Some applications, such as hoisting and lifting, can benefit from the disabling of current limit fold back.

Faults

Faults are events or conditions occurring within and/or outside of the drive. These events or conditions by default are considered to be of such significant magnitude that drive operation is discontinued. Faults are annunciated by the STS (Status) indicator on the drive, a HIM, communications network and/or contact outputs.

Drive Response to Faults

When a fault occurs, the fault condition is latched, requiring the user or application to perform a fault reset to clear the latched condition. The condition that caused the fault determines the user response. If the condition that caused the fault still exists after a fault reset, the drive faults again and the fault condition is latched.

- In response to a fault, the drive takes a predetermined action based on fault type. Drive response to some fault types are user configurable. With non-configurable faults the drive output is turned off and a “coast to stop” sequence occurs. The Troubleshooting section of PowerFlex 750-Series Programming Manual, publication 750-PM001, provides details on both types of faults.
- The fault code is entered into the first buffer of the fault queue (see Fault Queue below for rules).
- Additional data on the status of the drive at the time that the fault occurred is recorded. This information is always related to the most recent fault queue entry captured by P951[Last Fault Code]. When another fault occurs, this data is overwritten.

The following data/conditions are captured and latched into non-volatile drive memory.

- P952 [Fault Status A]
  P953 [Fault Status B]
  Indicates the occurrence of conditions that have been configured as faults.
- P954 [Status1 at Fault]
  P955 [Status2 at Fault]
  Captures operating conditions of the drive at the time of the fault.
- P957 [Fault Amps]
  Motor amps at the time of the fault.
- P958 [Fault Bus Volts]
  DC Bus volts at time of the fault.
- P956 [Fault Frequency]
  Output Hertz at the time of fault.
- P962 [AlarmA at Fault]
  P963 [AlarmB at Fault]
  Captures and displays P959/960 [Alarm Status A/B] at the last fault.

Fault Queue

Faults are also logged into a fault queue such that a history of the most recent fault events is retained. Each recorded event includes a fault code (with associated text) and a fault "time of occurrence." PowerFlex 750-Series drives have a 32 event queue.

The fault queue records the occurrence of each fault event that occurs while no other fault is latched. Each fault queue entry includes a fault code and a time stamp value. New fault events are not logged to the fault queue if a previous fault has already occurred, but has not yet been reset. Only faults that actually trip the drive are logged. No fault that occurs while the drive is already faulted is logged.

The fault queue is a first-in, first-out (FIFO) queue. Fault queue entry 1 is always the most-recent entry (newest). Entry 32 is always the oldest. As a new fault is logged, each existing entry is shifted by one. The previous entry 1 moves to entry 2, previous entry 2 moves to entry 3, and so on. If the queue is full when a fault occurs, the oldest entry is discarded.

The fault queue is saved in nonvolatile storage at power loss and its content retained when power is cycled.

Fault Code and Time Stamp

The fault code with descriptive text for each entry can be viewed with a HIM. Once the fault code is displayed, pressing the enter key again on the HIM displays the time stamp associated with that fault code. The time stamp is the elapsed time since the fault occurred.

When using one of the available software tools (DriveExecutive, DriveExplorer, Connected Component Workbench, or Logix Designer), the fault code, descriptive text, and time stamp are displayed simultaneously.

Resetting or Clearing a Fault

A latched fault condition can be cleared by the following methods.

- An off to on transition on a digital input configured as DI Clear Fault.
- Pressing the “CLR” soft key or Stop button on the HIM once a fault has been displayed.
- A DPI peripheral (several ways).
- Performing a reset to factory defaults via parameter write.
- Cycling power to the drive such that the control board goes through a power-up sequence.

Resetting faults clears the faulted status indication. If any fault condition still exists, the fault is re-latched and another entry made in the fault queue.

Clearing the Fault Queue

Performing a fault reset does not clear the fault queue. This can be done from a menu selection of the HIM or from a DPI command through the communications port.

Fault Configuration

The drive can be configured such that some conditions do not trip the drive.

The following is a brief list of drive configurable faults. Some of these faults are explained in more detail in their own section of this document.

Accessories such as encoder or I/O cards have additional configurable faults. Refer to the Troubleshooting section of the PowerFlex 750-Series Programming Manual, publication 750-PM001.

- P409 [Dec Inhibit Actn]
- P410 [Motor OL Actn]
- P435 [Shear Pin 1 Actn]
- P438 [Shear Pin 2 Actn]
- P444 [OutPhaseLossActn]
- P449 [Power Loss Actn]
- P462 [InPhase LossActn]
- P466 [Ground Warn Actn]
- P493 [HSFan EventActn]
- P500 [InFan EventActn]
- P506 [MtrBrngEventActn]
- P510 [MtrLubeEventActn]
- P515 [MchBrgEventActn]
- P519 [MchLubeEventActn]
- P865 [DPI Pt1 Flt Actn]
- P866 [DPI Pt2 Flt Actn]
- P867 [DPI Pt3 Flt Actn]
- P1173 [TorqAlarm TOActn]

Input Phase Loss Detection

Occasionally, three-phase power sources can fail on one phase while continuing to deliver power between the remaining 2 phases (single-phase). Operating above 50% output under this single-phase condition can damage the drive. If such a condition is likely, we recommend that Input Phase Loss Detection be enabled. The drive can be programmed to turn on an alarm bit or issue a drive fault (minor or major). The drive accomplishes this by interpreting voltage ripple on the DC bus.

Configuring Input Phase Loss Action

P462 [InPhase LossActn]

The following bits configure Input Phase Loss action:

- "Ignore" (0) – No action is taken. This can seriously degrade the drive.
- "Alarm" (1) – Type 1 alarm indicated.
- "Flt Minor" (2) – Minor fault indicated. If running, drive continues to run. Enable with P950 [Minor Flt Cfg]. If not enabled, acts like a major fault.
- "FltCoastStop" (3) – Major fault indicated. Coast to Stop.
- "Flt RampStop" (4) – Major fault indicated. Ramp to Stop.
- "Flt CL Stop" (5) – Major fault indicated. Current Limit Stop.

An input phase loss is indicated in P937 [Condition Sts 1] Bit 4 "InPhaseLoss."

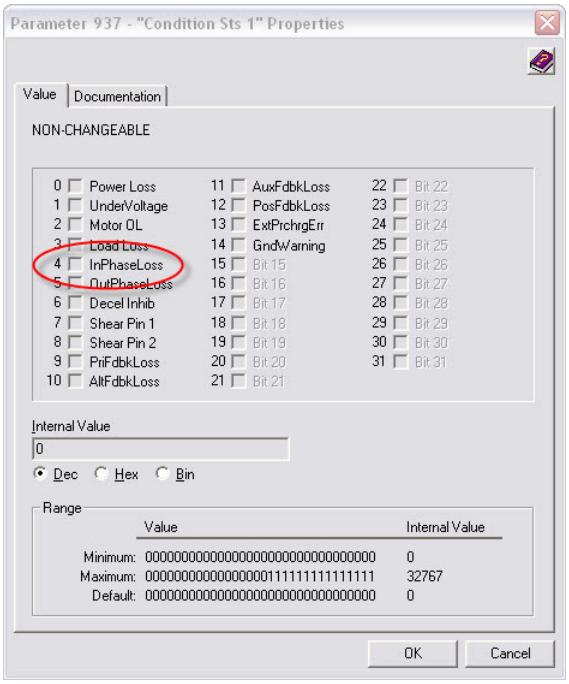

If a fault action has been selected as a result of an input phase loss, P952 [Fault Status A] Bit 4 “InPhaseLoss” is set.

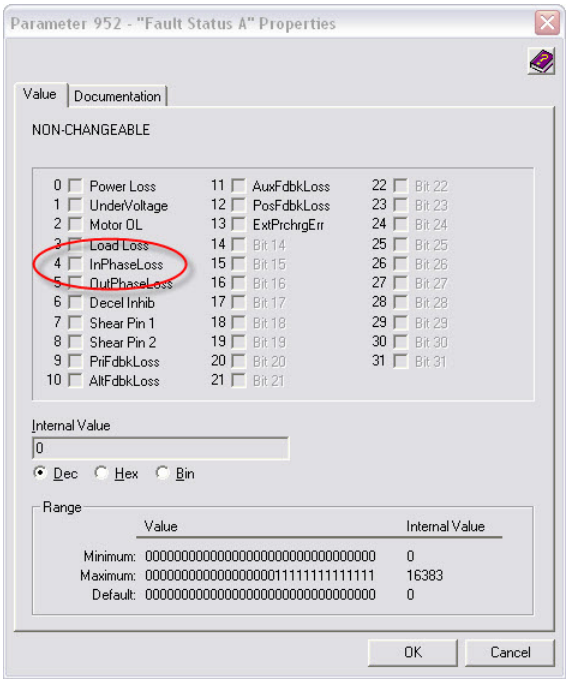

If an alarm action is selected as a result for the input phase loss, P959 [Alarm Status A] Bit 4 “InPhaseLoss” is set.

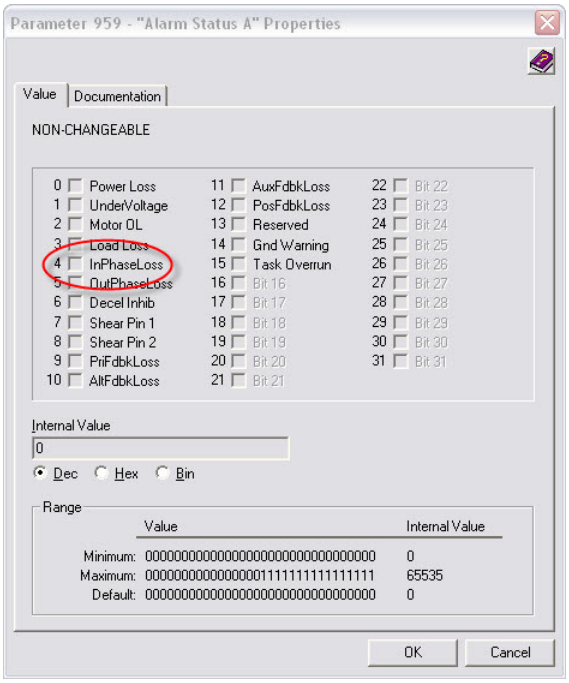

P463 [InPhase Loss Lvl]

Sets the threshold at which the DC bus voltage ripple triggers an F17 "Input Phase Loss" fault. Input phase loss is assumed when the DC bus voltage ripple exceeds the tolerance set by this parameter for a certain time period of time. Setting a larger value permits a higher bus voltage ripple without causing the drive to fault but also results in more heating in the bus capacitors shortening their life or possibly resulting in failure. The default value of 325 is equal to the expected ripple level for a full rated motor running at half load with single phase input. This is just a different way of saying that if you know you are going to run single phase, derate the drive by 50%.

Loading conditions on the motor could also have an effect on this parameter. Particularly shock loads.

Motor Overload

The motor overload protection feature uses an IT (inverse time) algorithm to model the temperature of the motor and follows the same curve as a physical class 10 overload device.

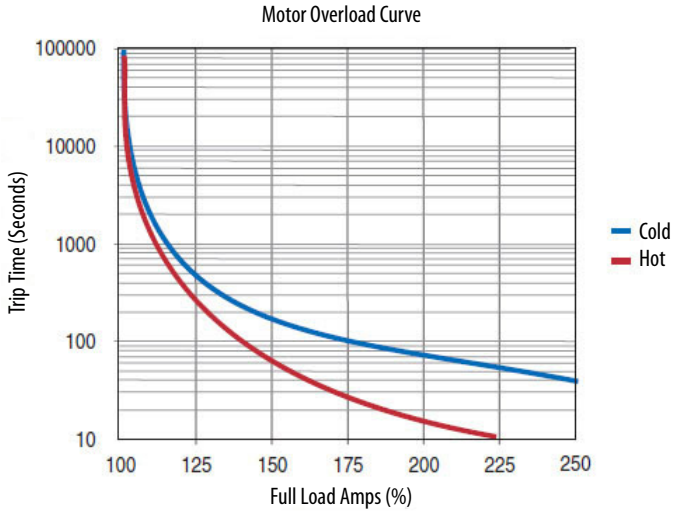

P26 [Motor NP Amps] is used by the overload feature to establish the 100% level (y axis) shown in the graph above.

Setting P410 [Motor OL Actn] to zero disables the motor thermal overload. For multiple motor applications (more than one motor connected to one drive), separate external overloads for each motor are required, and the drive's motor overload can be disabled.

Operation of the overload is based on three parameters.

- P26 [Motor NP Amps] is the base value for motor protection.
- P413 [Mtr OL Factor] is used to adjust for the service factor of the motor. Within the drive, motor nameplate FLA is multiplied by motor overload factor to select the rated current for the motor thermal overload. This can be used to raise or lower the level of current that causes the motor thermal overload to trip without the need to adjust the motor FLA. For example, if motor nameplate FLA is 10 Amps and motor overload factor is 1.2, then motor thermal overload uses 12 Amps as 100%.

IMPORTANT Some motors have a service factor that is only for use with sine wave (non-drive) power. Check with the motor manufacturer to see if the nameplate service factor is valid or must be reduced when operated by a drive.

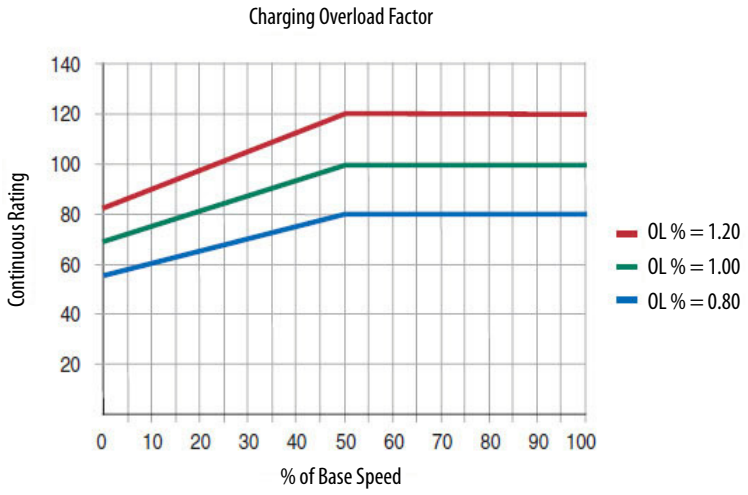

- P414 [Mtr OL Hertz] is used to further protect motors with limited speed ranges. Because many motors do not have sufficient cooling ability at lower speeds, the overload feature can be programmed to increase protection in the lower speed areas. This parameter defines the frequency where derating the motor overload capacity begins. For all settings of overload Hz other than zero, the overload capacity is reduced to 70% when output frequency is zero. During DC injection braking, the motor current can exceed 70% of FLA, but this causes the motor overload to trip sooner than when operating at base speed. At low frequencies, the limiting factor can be the drive overload rather than the motor overload.

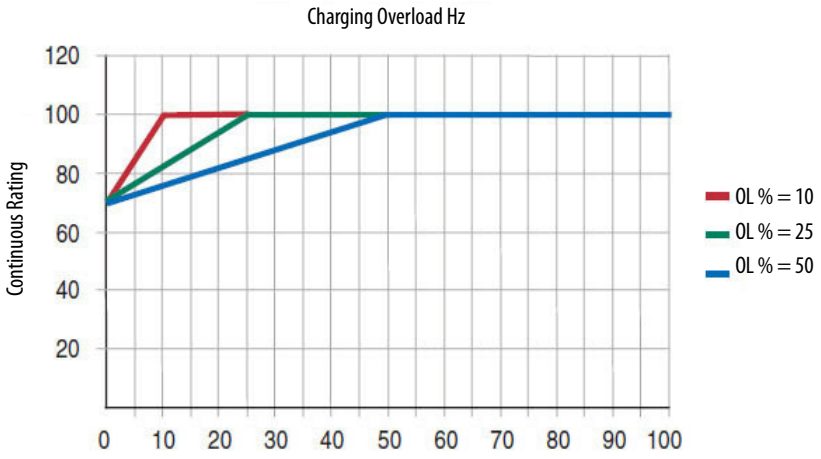

Duty Cycle for the Motor Overload

When the motor is cold, this function enables 3 minutes at 150%. When the motor is hot, it enables 1 minute at 150%. A continuous load of 102% is allowed to avoid nuisance faults. The duty cycle of the motor overload is defined as follows. If operating continuous at 100% FLA, and the load increases to 150% FLA for 59 seconds and then returns to 100% FLA, the load must remain at 100% FLA for 20 minutes to reach steady state.

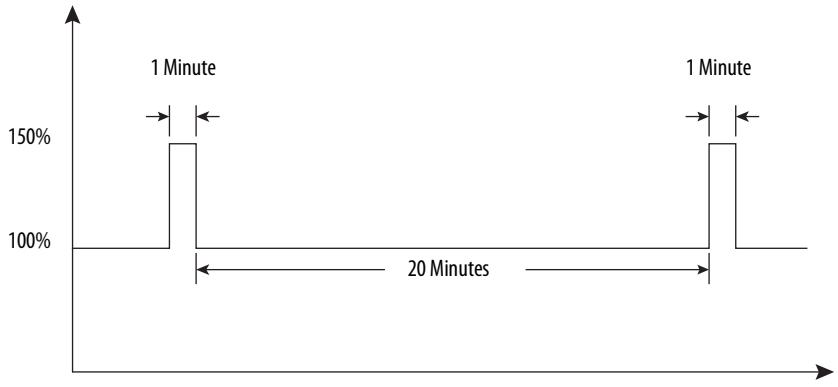

The ratio of 1:20 is the same for all durations of 150%. When operating continuous at 100%, if the load increases to 150% for 1 second the load must then return to 100% for 20 seconds before another step to 150%.

%FLA	Cold Trip Time	Hot Trip Time
105	6320	5995
110	1794	1500
115	934	667
120	619	375
125	456	240
130	357	167
135	291	122
140	244	94
145	209	94
150	180	60
155	160	50
160	142	42
165	128	36
170	115	31
175	105	27
180	96	23
185	88	21
190	82	19
195	76	17
200	70	15

IMPORTANT If the application requires high overload current for long durations (for example 150% for 60 seconds), heavy duty sizing (between drive and motor) is required.

Activating Motor Overload

To turn on Motor Overload protection, configure P410 [Motor OL Actn]. This activates the function. Default setting is 3 “FltCoastStop.” The following bits configure P410 [Motor OL Actn].

- “Ignore” (0) – No action is taken.
- “Alarm” (1) – Type 1 alarm indicated.
- “Flt Minor” (2) – Minor fault indicated. If running, drive continues to run. Enable with P950 [Minor Flt Cfg]. If not enabled, acts like a major fault.
- “FltCoastStop” (3) – Major fault indicated. Coast to Stop.
- “Flt RampStop” (4) – Major fault indicated. Ramp to Stop.
- “Flt CL Stop” (5) – Major fault indicated. Current Limit Stop.

Table 10 - Other Parameters

Parameter No.	Parameter Name	Description
411	Mtr OL at Pwr Up	Motor Overload at Power Up parameter configures the motor overload feature regarding the state of the overload counter at power up. • "Assume Cold" (0) – P418 [Mtr OL Counts] will be reset to zero the next time the drive is powered up. • "UseLastValue" (1) – The value of P418 [Mtr OL Counts] will be retained at power down and restored the next time the drive is powered up. • RealTimeClk (2) – The value of P418 [Mtr OL Counts] begins to decrease at drive power down, reflecting the cooling of the motor, and stops at drive power-up or when zero is reached. This option is only available when the real time clock is active on the drive.
412	Mtr OL Alarm Lvl	You can have the drive issue an alarm when the P418 [Mtr OL Counts] reaches a certain level. Enter this value in P412 [Mtr OL Alarm Lvl]. This alarm level is different than, and independent of, the alarm action selected by P410 [Motor OL Actn].
413	Mtr OL Factor	Motor Overload Factor parameter sets the minimum level of current (in percent or P26 [Motor NP Amps]) that causes the motor overload counter to increment. Current levels below this value decrement the overload counter. For example, a service factor of 1.15 implies continuous operation up to 115% of nameplate motor current.
414	Mtr OL Hertz	Motor Overload Hertz parameter selects the output frequency below which the motor operating current is derated (more sensitive) to account for the reduced self-cooling capability of typical motors, operating at slower speeds. For motors with extra low speed cooling capacity (for example 10:1 or blower cooled), reduce this setting to take full advantage of the motor being used.
415	Mtr OL Reset Lvl	Motor Overload Reset Level parameter sets the level that resets a motor overload condition, and lets a fault (if selected as the motor overload action) be manually reset.
416	MtrOL Reset Time	Motor Overload Reset Time parameter displays the time it takes to restart the drive after a motor overload fault has occurred and the value in P418 [Mtr OL Counts] is less than the P415 [Mtr OL Reset Lvl].
418	Mtr OL Counts	Motor Overload Counts parameter displays the accumulated percentage of motor overload. Continuously operating the motor over 100% of the motor overload setting increases this value to 100% and cause the action selected in P410 [Motor OL Actn] to be taken.
419	Mtr OL Trip Time	Motor Overload Trip Time parameter displays the inverse of the motor overload time, equal to the number of seconds before P418 [Mtr OL Counts] reaches 100%, and the motor overload action is taken.

Overspeed Limit

An overspeed condition results when the motor speed falls outside of its normal operating range. The forward motor rotation limit is P520 [Max Fwd Speed] + P524 [Overspeed Limit] and the reverse motor rotation limit is P521 [Max Rev Speed] - P524 [Overspeed Limit]. In Flux Vector Control mode or Scalar Control mode with encoder, the motor speed used is a 2msec averaged value of P131 [Active Vel Fdbk]. In Scalar Control mode without an encoder, the overspeed check uses P1 [Output Frequency]. The overspeed condition must exist for at least 16 milliseconds before it causes a fault to occur.

CIP Motion

When a PowerFlex 755 drive is running as a CIP Motion drive, then attribute 695 “Motor Overspeed User Limit” specifies the overspeed trip point directly. This attribute has units of percent of motor rated speed. So, if attribute 695 is set to 120% then the overspeed fault occurs at or above 120% rated speed.

Interior Permanent Magnet

For Interior Permanent Magnet motor control mode, an additional limit is placed on the Speed Limit + Overspeed threshold. This threshold is not allowed to exceed the setting in P1641 [IPM Max Spd] and is a +/- check. P1641 [IPM Max Spd] is set to the speed at which the motor produces the voltage limit of the drive. If the drive faults while the motor is rotating at this speed, the motor produces a voltage at the output of the drive. This voltage could damage the drive if the limit is exceeded. This limit is calculated while performing the rotate portion of the Autotune tests. For example, if P1641 calculated to be 57.82 Hz, then the overspeed limit threshold is set by the Speed Limit + Overspeed Limit parameters and the results are limited to a value of +/- 57.82 Hz.

Password

All parameter configuration settings for the drive and its connected peripherals can be protected from unauthorized access through the keypad by using a password.

When the host drive is password protected, parameter settings for the drive and its connected peripherals can be viewed but not changed until after the existing password value is entered. When attempting to edit a parameter value while logged out, the HIM prompts you for the password before allowing access.

Password protection also applies to the following.

- Drive start-up procedure
- Factory defaults
- User sets
- Copy Cat function

For detailed instructions on enabling and disabling password protection, refer to the PowerFlex 20-HIM-A6 and 20-HIM-C6S HIM (Human Interface Module) User Manual, publication 20HIM-UM001.

Real Time Clock

The PowerFlex 755 is equipped with a real-time clock with a battery backup. This enables programming of real time in the drive, and keeping that time even if the drives power is removed. This enables actual timestamps instead of runtime timestamps for faults and events. It is also used in the runtime accumulation of maintenance items such as total run time, number of times fans are running and so forth. If a battery is installed and the time values are set, time is accumulated. Approximate battery life is 4.5 years with drive unpowered, or lifetime if drive is powered.

The real time clock on the drive can be set two different ways. It can either be set from the HIM, or from DriveExecutive/DriveExplorer.

Setting the Real Time Clock via Drive HIM

1. Access the Status screen.
2. If Port 00 (Host Drive) is not shown above the ESC soft key, use the  or  key to scroll to Port 00.
3. Press the  key to display its last-viewed folder.
4. Use the  or  key to scroll to PROPERTIES folder.
5. Use the  or  key to select Set Date and Time.
6. Press the  (Enter) key to display its last-viewed folder.
7. Press the EDIT soft key to access the Set Date and Time mode screen, which highlights the present time zone line.
8. To select the time zone (set the drive to the current time zone).
   - Press the ZONES soft key to display the Select Time Zone screen.
   - Use the  or  key to select your basic time zone region (for example, Full List).
   - Press the  (Enter) key to enter your selection.
   - Use the  or  key to select your specific time zone (for example, Chicago), and press the  (Enter) key to enter it.
9. To set the date (set the drive to the current date).
   - Press the ▲ soft key to select the year in the top line, and use the numeric keys to enter the correct year.

   To delete an erroneous date (or time) entry, use the ← soft key. Also, a partial or complete date (or time) value will not update until you press the ► soft key to enter the data. You have to press the ? soft key a second time

to advance to another field or press the ESC soft key to return to the previous screen.

- Press the ► soft key to select the month in the top line, and use the numeric keys to enter the correct month.
- Press the ► soft key to select the day in the top line, and use the numeric keys to enter the correct day.

10. To set the time (set the drive to the current time).
    - Press the ► soft key to select the hour in the top line, and use the numeric keys to enter the correct hour.
    - Press the ► soft key to select the minutes in the top line, and use the numeric keys to enter the correct minute.
    - Press the ► soft key to select the seconds in the top line, and use the numeric keys to enter the correct seconds.
11. Press the ESC soft key to return to the previous screen.

Setting the Real Time Clock via Drive Software

To set the real time clock using a software package like DriveExecutive or DriveExplorer™ software the procedure is the same.

1. First press the  at the top center of the application.

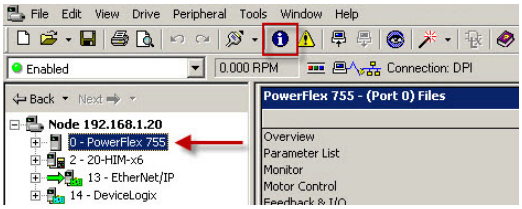

This dialog box appears.

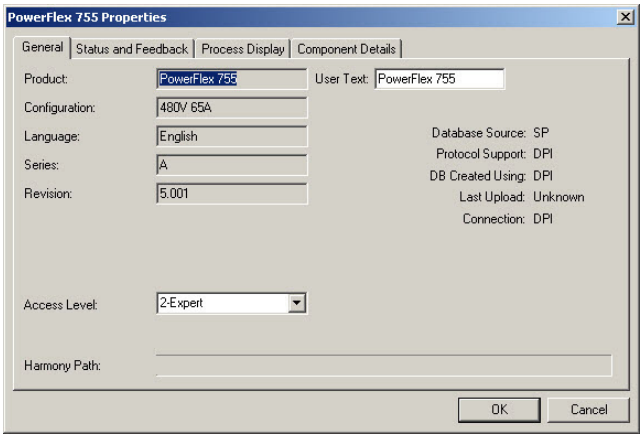

2. Click the Status and Feedback tab.

3. Click Display Alarms/Faults Dialog.

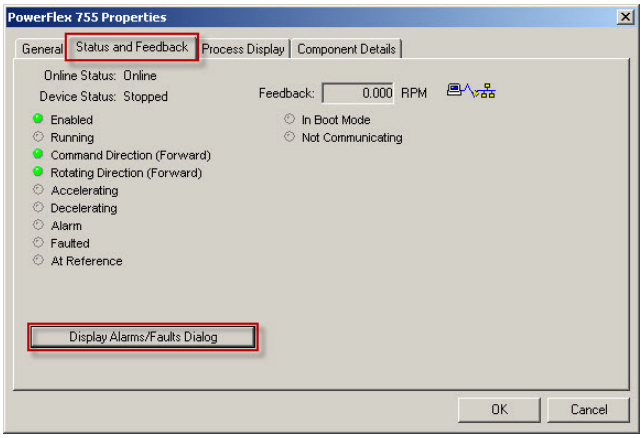

A new dialog box appears.

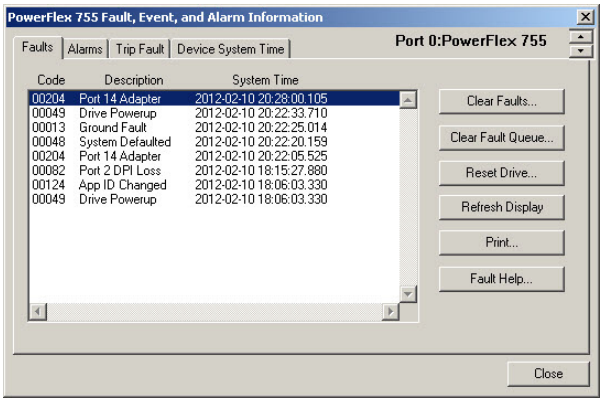

4. Click the Device System Time tab.

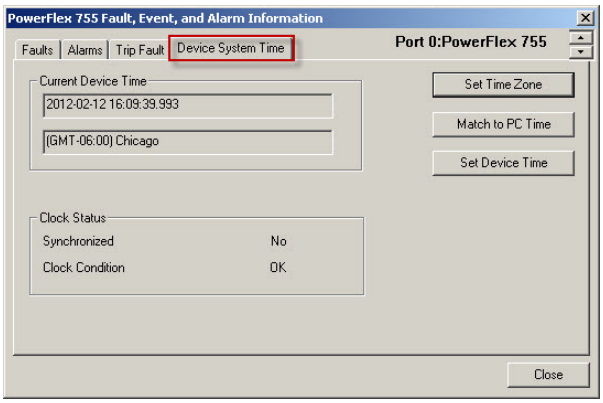

5. If necessary, change the values in the Set Time Zone and Set Device Time dialog boxes.

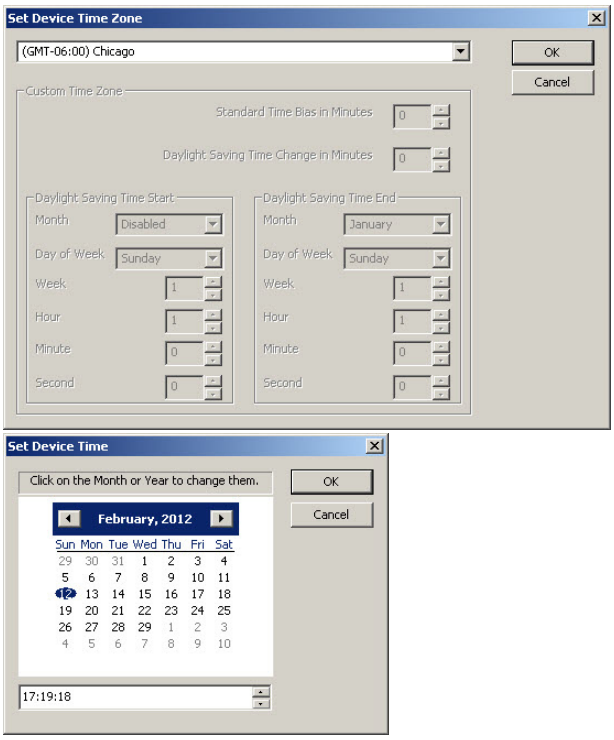

Installing Battery

To install the battery, first locate the main control board. The location of the main control board is in the far right location of the control POD. The main control board for the PowerFlex 753 and 755 drives are shown below.

Figure 16 - PowerFlex 753 Main Control Board

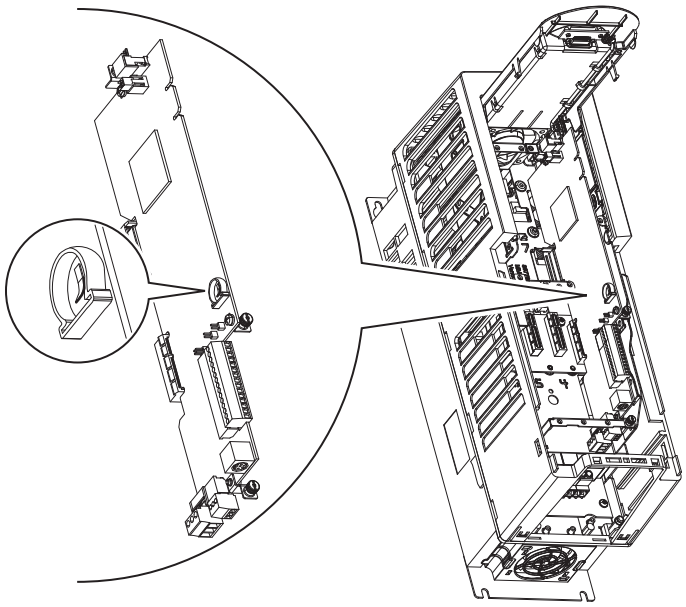

Figure 17 - PowerFlex 755 Main Control Board

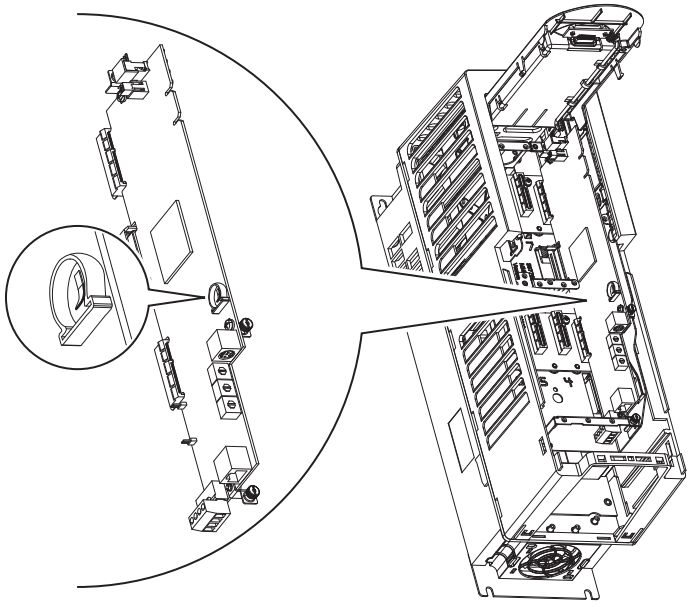

The battery is installed in pointer position 3. The battery receptacle requires a user-installed CR1220 lithium coin cell battery that provides power to the Real Time Clock. Installing a battery preserves the Real Time Clock setting in the event power to the drive is lost or cycled. Approximate battery life is 4.5 years with drive unpowered, or lifetime if drive is powered. Install the battery with "+" facing out.

Removing Battery

To remove the battery, simply use a screwdriver to press down on the metal tab going across the battery. Prying the battery out of its holder can result in permanent damage to the main control board.

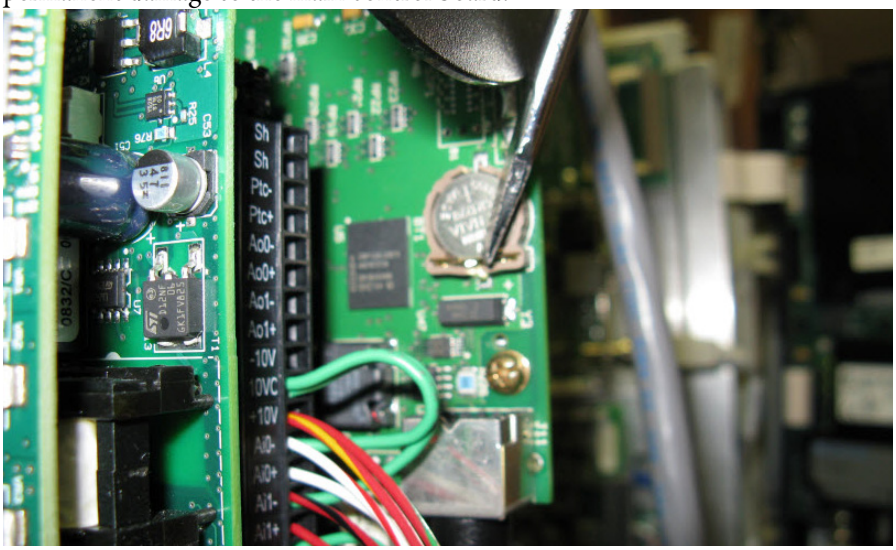

Reflected Wave

Reflected waves are a phenomenon associated with long cables and fast changes in voltage levels. They were first identified on power transmission lines that are hundreds of miles long. When the power is switched on at one end, the step in voltage travels the length of the transmission line and is reflected back to the switch. The voltage at the far end often surges to twice the initial value of the voltage. Because the voltages involved are quite high, for example 230,000V or more, a surge of 460,000V can result in a damaging arcing fault.

Adjustable speed drives, using IGBT switches that turn on and off within a few nanoseconds, experience the same phenomenon at the AC motor terminals. This can cause motor failures within months or even weeks of commissioning the motor with a drive.

A PWM AC drive provides variable voltage and variable frequency to a motor from a DC bus voltage. It creates the sinusoidally varying voltage to the motor by continually changing the duty cycle of the IGBT switches in a pulse-width-modulated fashion. Because the motor is largely an inductive load, the current that flows is an integration of the voltage with a lagging phase angle. Figure 18 shows what the drives line-to-line output voltage looks like. The peaks of the output voltage are equal to the value of the DC bus in the drive. Only the widths and polarities change.

Figure 18 - PWM Voltage at the Drive Output Terminals

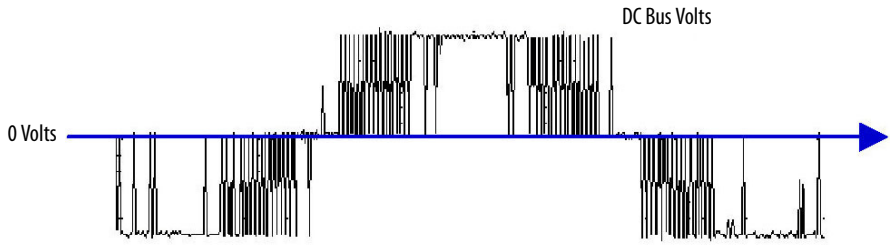

Ideally, the voltage waveform at the motor looks exactly the same as the output of the drive. However, the voltage at the motor has individual on/off pulses that make up the PWM voltage waveform along with a ringing that occurs at every switching transition. This is shown in Figure 19. The peaks of the ringing waveform can easily reach two times the peak of the voltage pulses at the drive (the DC bus voltage). After a short time, the ringing dies away and the motor sees the normal DC bus voltage level. It is this peak level of the ringing voltage that causes motor failure.

Figure 19 - PWM Voltage at the Motor Terminals

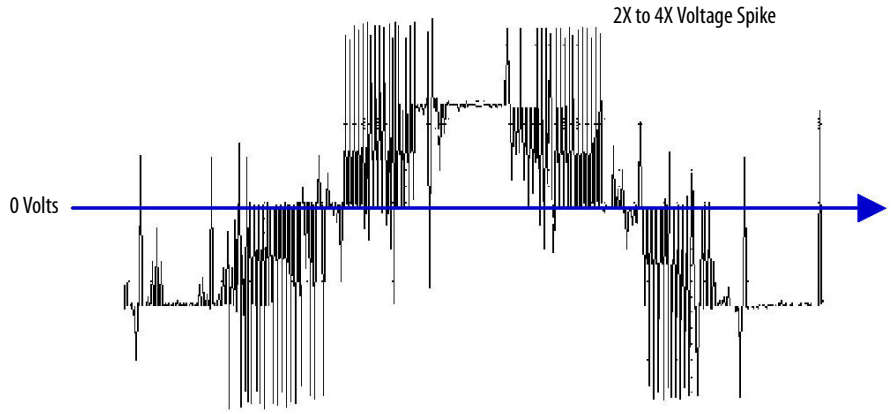

Shorten the time sweep or magnify these pulses and the ringing effect at the motor terminals can be seen.

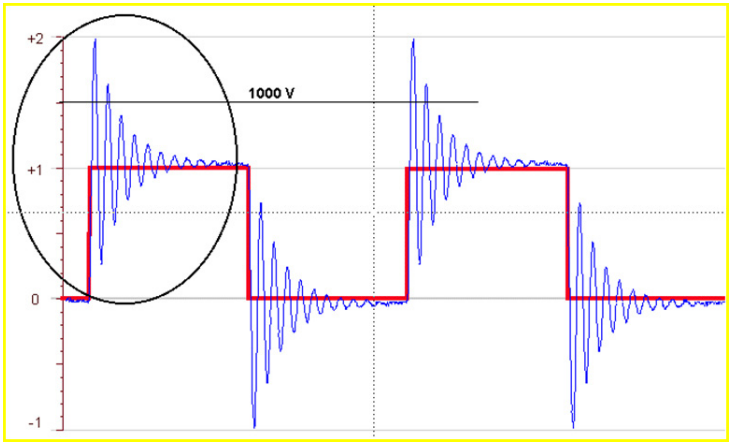

When the voltage at the motor terminals exceeds the insulation rating of the motor, corona begins to appear. This corona deteriorates the insulation system, eventually leading to a fault to ground. Such a failure is shown below.

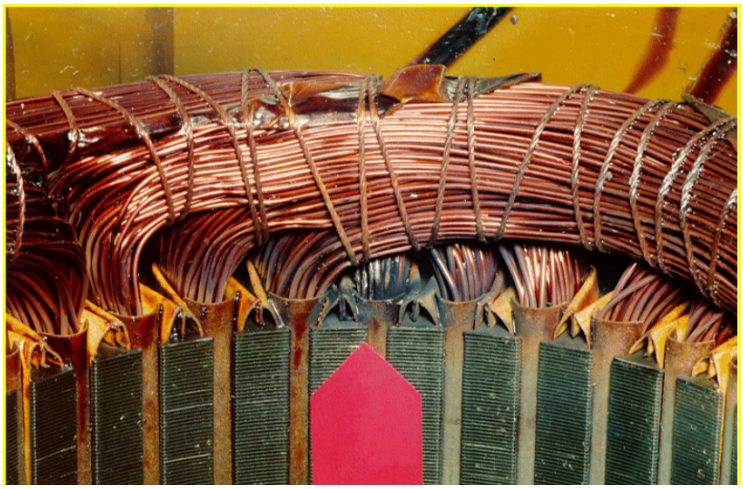

The level of the DC bus voltage has a direct effect on the peak level of the ringing surge voltage. If the drive operates at 230V AC, the DC bus voltage is about 310V DC and two times peak only reaches 620Vpk. This peak will not damage most motors. However, a 460V AC drive operates at 620V DC bus voltage and 1240Vpk and a 575V AC drive operates at 775V DC and 1550Vpk.

Non-inverter grade motors have insulation systems rated to 1000V and 1200V depending on their construction.

- 1000V motors are assembled without phase paper.
- 1200V motors are assembled with phase paper and slot insulation.

Non-inverter grade motors will fail if operated from a 460V or 575V drive.

There are three ways to eliminate the effects of reflected waves on motors.

1. Match the motor surge impedance to the cable surge impedance.
2. Reduce the dv/dt.

   These methods reduce or eliminate reflected wave and surge voltage at the motor.
3. Better insulate the motor so the effects of the surge voltage will not damage the motor.

For inverter applications, NEMA updated the standard MG 1-1998, section 31 regarding motor insulation systems. An inverter duty motor needs to withstand surge voltages that are 3.1 times the rated motor voltage and rise times greater than 0.1 μs. This is 1488V for a 460V motor. to provide better protection, some motor manufacturers have started producing 1600V rated insulation for inverter grade motors. However, even if a motor can withstand 1600V surges, it can still fail if the insulation cannot hold up under rated motor temperatures.

The Terminator

Is it possible to match the surge impedance of the motor to the cable? There is a device called the terminator that does this, shown in the figure below. It is an RC network at the motor that matches the load surge impedance to the cable. Figure 20 shows the surge voltages when using the terminator. The overshoot is very low, with no ringing to speak of. Due to losses, this device is good for cable lengths up to 600 ft, and for carrier frequencies less than or equal to 4 kHz. However, its key advantage is that this one device works well for any motor in the range from 0.5 to 500hp because it does not have to handle the motor current, being a parallel device.

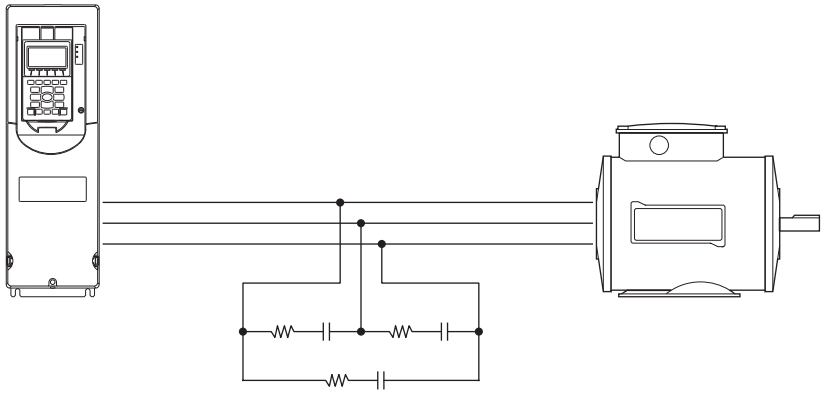

Line Reactor

What if we go the other way, matching the surge impedance of the cable to the motor? There are several products available that do this. They all consist of the addition of a line reactor at the output of the drive. See the figure below. A 3% line reactor by itself also reduces the dV/dt, but a big disadvantage is that it reduces the voltage available to the motor by 3%. This is useful for cables up to about 600 ft. A better device is what we call a “reflected wave reduction” device where the line reactor is reduced to about 0.2%, and a resistor is placed in parallel with each of the reactors. This reduces the dV/dt and has a voltage drop of only 0.2% instead of 3%. It can be used with cables up to about 1200 ft.

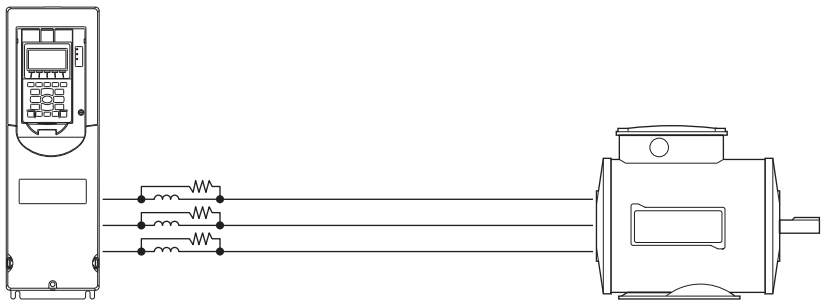

A method to reduce just the dV/dt is to use shielded cable between the drive and the motor. The inherent capacitance between the lines and the shield help keep the surge voltage at 1200V up to 600 ft with PWM drives.

Sine Wave Filter

Instead of matching impedances or reducing the dV/dt of the individual pulses coming from the drive, create a filter that enables the lower fundamental frequencies to pass, and block or absorb the higher frequencies caused by the fast switching IGBTs and the carrier frequency of the PWM waveform? There are two types that are on the market today. One that consists of an LC filter and another that consists of output line reactors along with tuned LC sections.

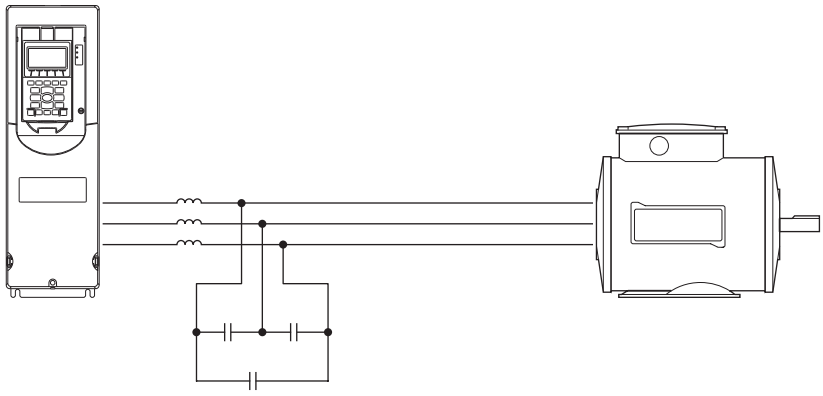

Waveforms

The waveforms A, B, and C in the figure below describe the different mitigations solutions shown on top of each other.

A - Unprotected motor
B - Line Reactor at the Drive
C - Terminator or RWR

Figure 20 - Waveform Comparison

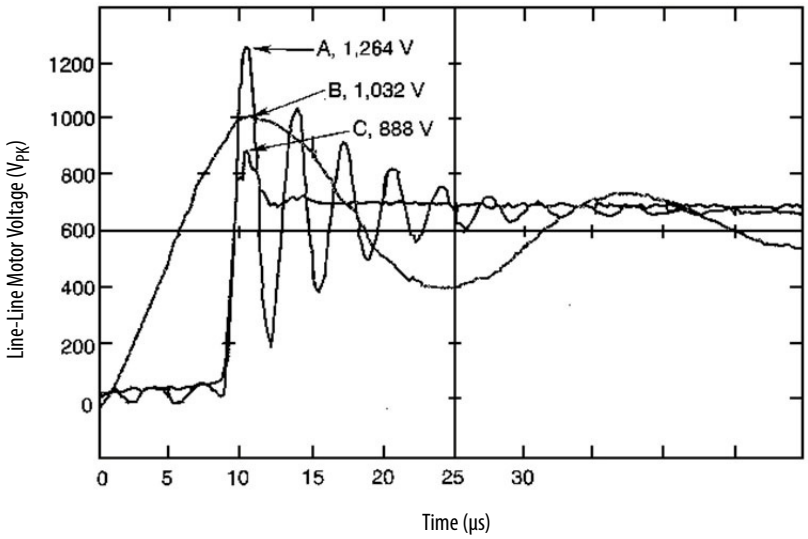

Here are waveforms using a sine wave filter at 30 and 60 Hz. As you can see there are no issues with reflected wave when using a sine wave filter.

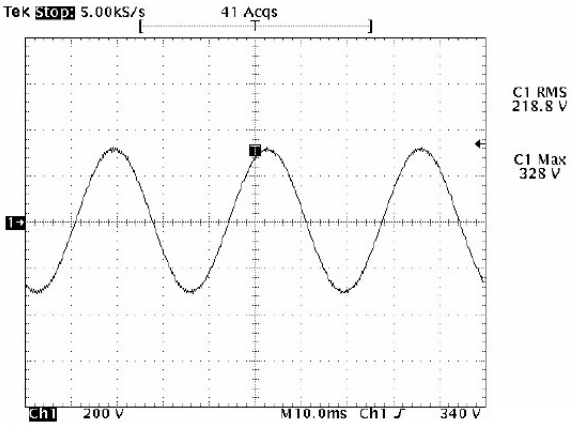

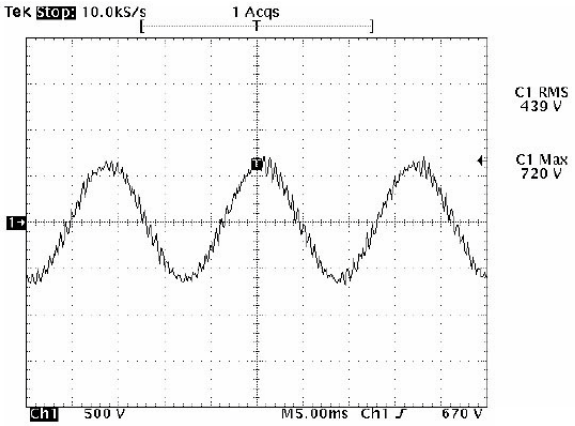

Security

The Security feature provides drive access protection.

Ports

This feature provides write access protection for individual communication ports in the drive. The HIM or communication modules with software tools can be used to change any port to read only.

A password can also be used with the HIM to prevent writing to parameters through the keypad. See Password on page 173.

The following drive peripherals can be used to control access.

- 20-HIM-A6 or 20-HIM-C6S keypads
- 20-750-*n* and 20-COMM-*n* communication options
- 20-COMM-*n* legacy communication options

Refer to the PowerFlex 750-Series AC Drives Technical Data, publication 750-TD001 for suitability and details.

The following software tools can be used to control access.

- Connected Components Workbench™ (CCW) version 2.0 or later (freeware)
- DriveExplorer version 6.04.99 (freeware)
- DriveExecutive version 5.03 or later

By default, every DPI port in the drive is configured to allow read and write access.

To change the write access on an individual DPI port, change the bit setting of the associated port in P888 [Write Mask Cfg]. Changing the bit value from 1 (read/write) to 0 with a HIM provides read only capability. Using software such as DriveExplorer, DriveExecutive, or CCW can also be used to turn the bit off. Below is an example of using CCW to change port 4 to read only.

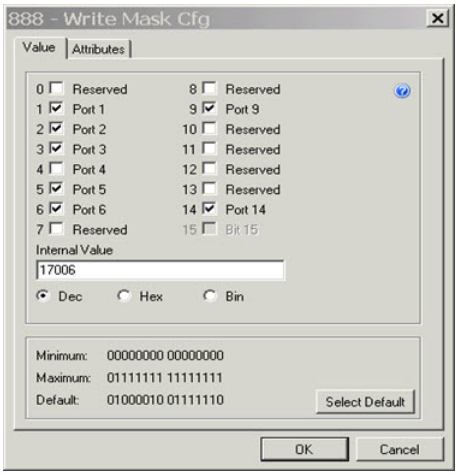

Any changes to P888 [Write Mask Cfg] will not take effect until one of the following three events occur.

- Power is removed and reapplied.
- A drive reset (not reset to defaults) is performed.
- P887 [Write Mask Act] Bit 15 transitions from 1 to 0.

The status of a port's write access can be verified at P887 [Write Mask Act]. For example, to verify that write access was disabled, P887 [Write Mask Act] Bit 4 "Port 4" equals 0.

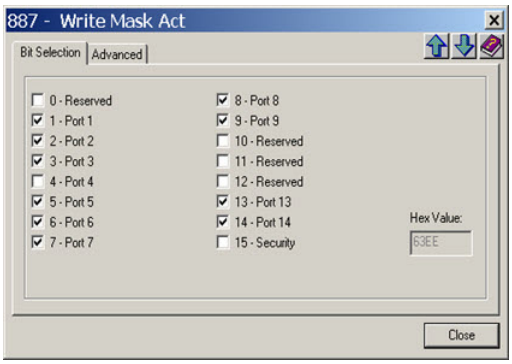

The port that is being used to make security changes (for example a network adapter connected to Port 5) can only change other ports and not itself to read only. This is to prevent the complete lockout of a drive with no future way to regain write access.

DPI (Network)

Network Security can only be activated with external software programs that have security capabilities, for example, FactoryTalk® software.

When P885 [Port Mask Act] Bit 15 "Security," P886 [Logic Mask Act] Bit 15 "Security," and P887 [Write Mask Act] Bit 15 "Security" are set to 1 "Read/Write," Network Security has been enabled by an external program like FactoryTalk and is controlling the logic mask and write mask instead of the parameter. These bits can only be enabled/disabled via the network program.

A port that is being used to communicate to the drive and set the masks or network security can only make changes to other ports and not itself. This is to prevent a complete lockout from a drive.

When the writing capabilities of ports 1, 2, or 3 have been masked, via parameter 888 [Write Mask Cfg] or Network Security, the HIM displays the following message when trying to edit a parameter.

- A6-HIM: Security is enabled. Access Denied
- A3-HIM with Firmware that has Security Functionality: Security Enable. Access Denied
- A3-HIM with Firmware that does not have Security Functionality: Device State has Disabled Function

Software used to interface with the drive also indicates if the writing capabilities have been disabled by P888 [Write Mask Cfg] or Network Security, via the communication port being used.

Below are examples of parameters viewed with drive software via DriveExplorer or CCW when the connected port has been write disabled. The parameter value is grayed out and a lock is displayed.

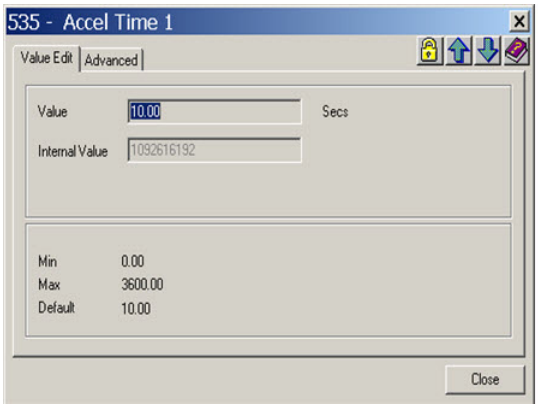

DriveExplorer

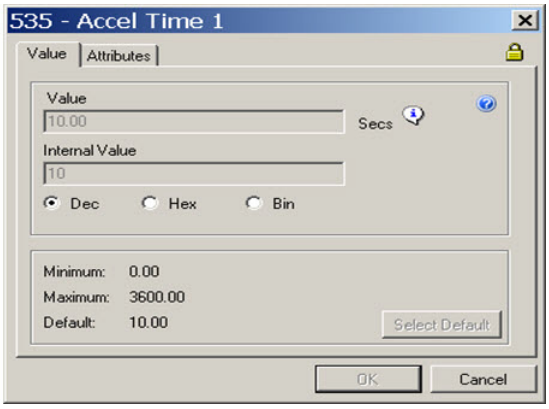

Connected Components Workbench

Attempting to edit a parameter or clicking on the lock results in one the following screens being displayed when using DriveExecutive or CCW software.

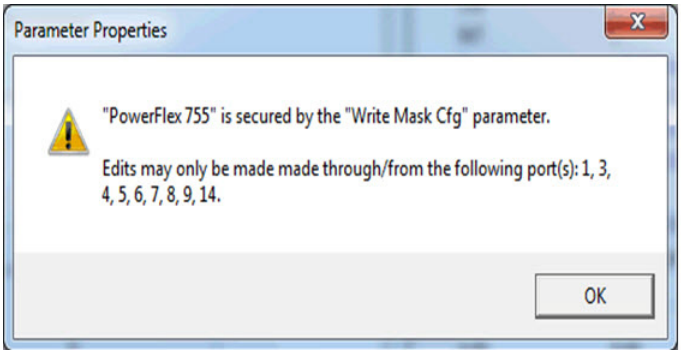

Drive Explorer



Connected Components Workbench

Shear Pin

As a default, the drive folds back when the output current exceeds the current limit level. However, the shear pin feature can be used to instantly fault the drive when output current exceeds a programmed amount. Additionally, the drive can be programmed to ignore this condition during acceleration and deceleration which often requires current that otherwise causes a shear pin fault. Also, the condition can be ignored for a programmable amount of time.

Activating Shear Pin

To turn on either Shear Pin 1 or Shear Pin 2, configure [Shear Pin *n* Actn]. This activates the function. Selection between P435 [Shear Pin 1 Actn] and P438 [Shear Pin 2 Actn], cannot be made by a digital input. These parameters can be set over a communication network. The options for each shear pin action are the same. Default for each is 0 "Ignore." The following are the settings for P435 and P438.

- "Ignore" (0) – No action is taken.
- "Alarm" (1) – Type 1 alarm indicated.
- "Flt Minor" (2) – Minor fault indicated. If running, drive continues to run. Enable with P950 [Minor Flt Cfg]. If not enabled, acts like a major fault.
- "FltCoastStop" (3) – Major fault indicated. Coast to Stop.
- "Flt RampStop" (4) – Major fault indicated. Ramp to Stop.
- "Flt CL Stop" (5) – Major fault indicated. Current Limit Stop.

Ignore During Acceleration

There are situations where a fast acceleration of the motor causes the drive to output current to the motor near or at the current limit value for shear pin and fault the drive while in acceleration. To avoid this condition set P434 [Shear Pin Cfg] Bit 0 "Shear1NoAcc" or Bit 1 "Shear2NoAcc" to 1 to ignore during acceleration.

Shear Pin Level

A shear pin level must be programmed for the drive to monitor. This level, when exceeded, starts a timer that must expire before performing the [Shear Pin *n* Actn]. This level is entered into P436 [Shear Pin 1 Level] or P439 [Shear Pin 2 Level]. The units are amps. Default is drive rated amps. Maximum is rated amps multiplied by 1.5.

Shear Pin Time

If an immediate action is to be taken, set shear pin time to 0. If the shear pin level is to be ignored for a period of time, enter that value into P437 [Shear Pin 1 Time] or P440 [Shear Pin 2 Time].

Generally, some value greater than 0 is entered in shear pin time to eliminate any faults on very short peak current spikes. Thus eliminating nuisance tripping.

Fault Indication

A unique fault (Shear Pin 1, F61) or (Shear Pin 1, F62) is generated if the function is activated and the condition occurs.

Application Example

By programming the Shear Pin feature, the drive faults, stopping the excess torque before mechanical damage occurs.

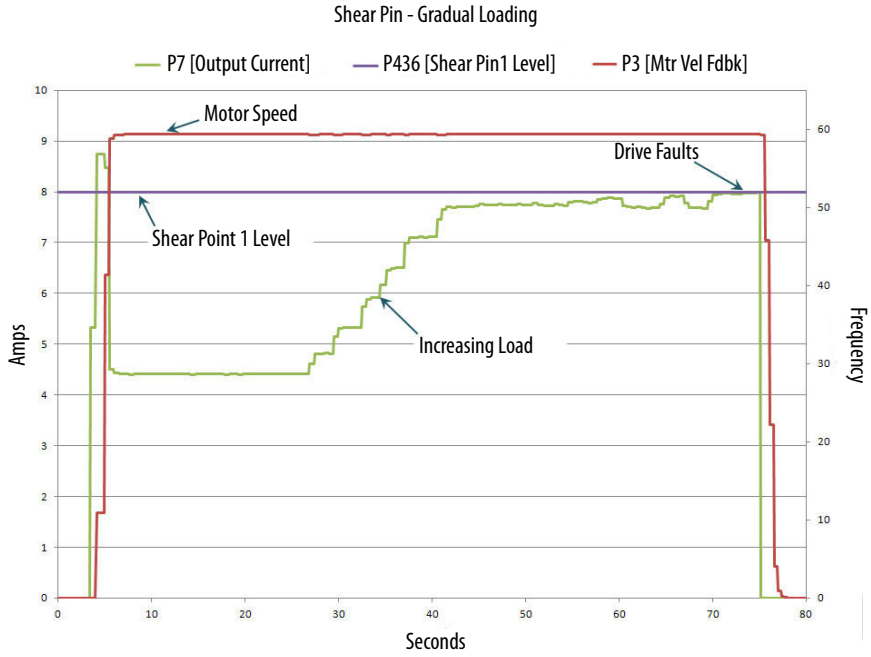

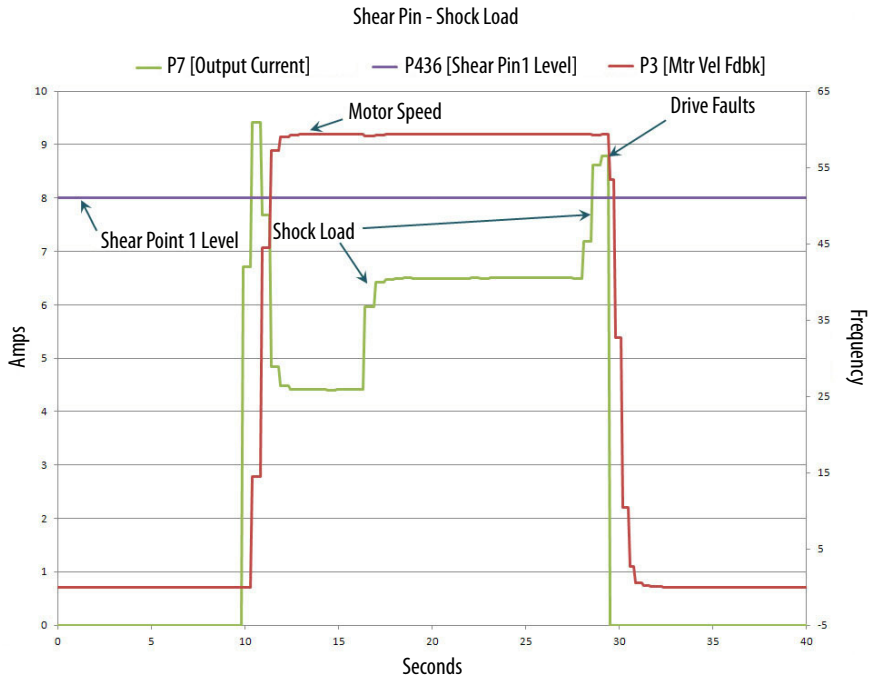

Acceleration Fault Anomaly

It is possible for the drive to trip during acceleration on a shear pin fault even when P434 [Shear Pin Cfg] Bits 0 or 1 in are set. This occurs when the accel time is set to something very small. The firmware looks at the internal "at speed" bit to indicate when acceleration is complete. This bit could be set internally faster than what appears the motor is indicating by sight. For example, if the accel time is set to something like 0.5 seconds and P434 Bit 0 is set. The drive will most likely trip on shear pin fault.

There are a couple ways to avoid this.

- Set the accel time longer. This reduces the current requirement.
- Enter a shear pin time longer than the acceleration time.

Using Both Shear Pin 1 and 2

If your application requires a notification of an impending Shear Pin fault. You can set Shear Pin 1 to give an Alarm at a certain current level, then set Shear Pin 2

to issue the actual fault at a higher current level or a slightly longer Shear Pin time.

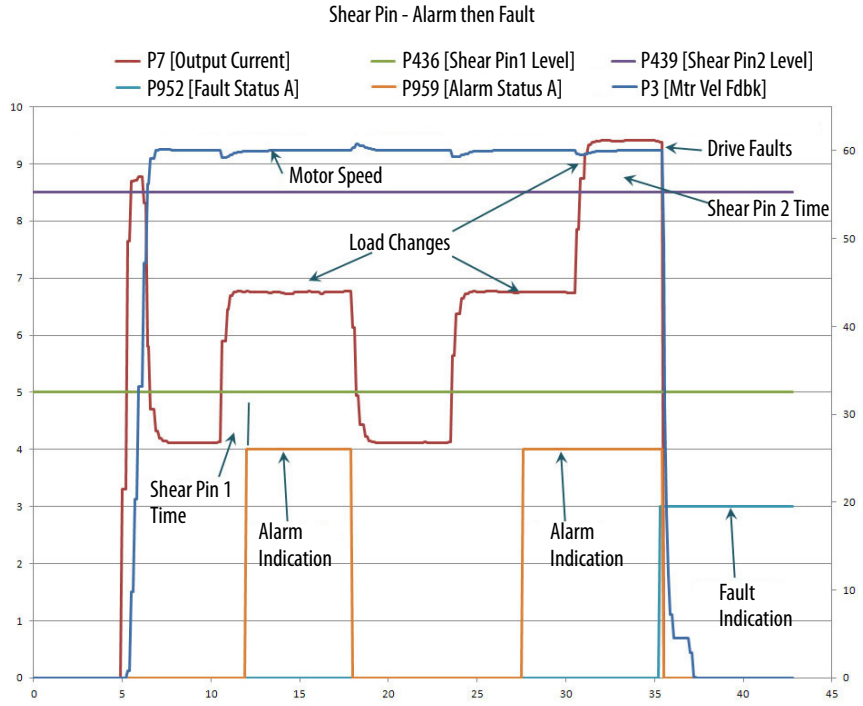

Other Points

The Shear Pin feature is not to be taken as a precise current reactionary feature. There can be as much as +/- 5% error in the current feedback signal used to determine shear point levels. Therefore it could be possible that the timer trip point is being set and reset until the entire current reference is above a setpoint.

Slip Compensation

When slip compensation mode is selected, the drive automatically adds the appropriate amount of output frequency to maintain a consistent motor speed independent of load. During drive commissioning, P621 [Slip RPM at FLA] is set based on entered motor nameplate information. This parameter can be adjusted to provide more or less compensation.

See the motor speed compensation figure below for a comparison of operation with and without slip compensation. This shows that over time, slip compensation corrects for changes in load (curved lines). In contrast, open loop operation shows that no correction is made based on load.

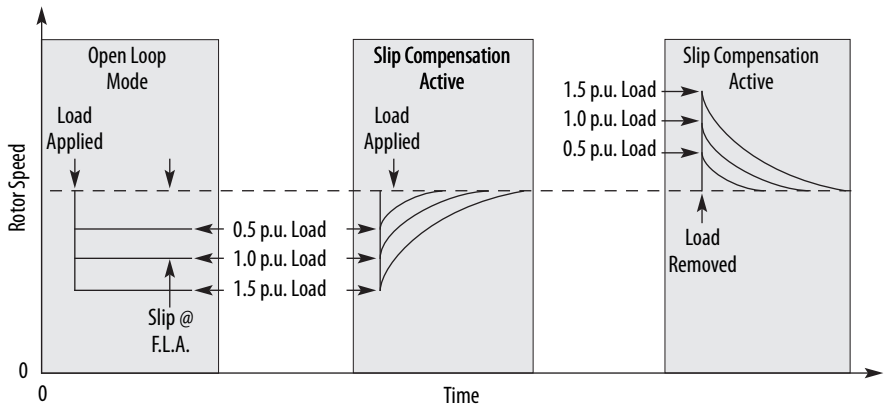

Internally, the drive converts the rated slip in RPM to rated slip in frequency. To more accurately determine the rated slip frequency in hertz, an estimate of flux current is necessary. This parameter is either a default value based on motor nameplate data or the autotune value. The drive scales the amount of slip compensation to the motor rated current. The amount of slip frequency added to the frequency command is then scaled by the sensed torque current (indirect measurement of the load) and displayed.

Slip compensation also affects the dynamic speed accuracy (ability to maintain speed during shock loading) as illustrated in the rotor speed response figure below. Initially, the motor is operating at some speed and no load. Some time later, an impact load is applied and the rotor speed decreases as a function of load and inertia. Finally, the impact load is removed and the rotor speed increases momentarily until the slip compensation is reduced based on the applied load.

The responsiveness to an impact load can be adjusted with P622 [Slip Comp BW]. However, too high setting can cause unstable operation and overshoot.

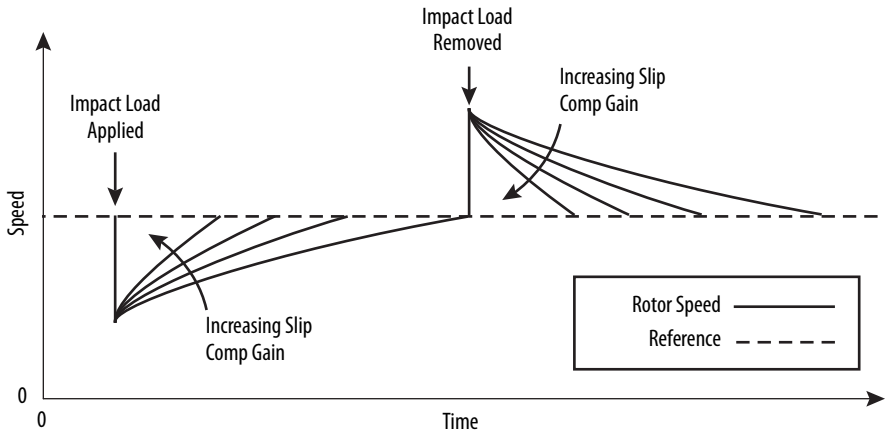

Baking Line Application Example

The diagram below shows a typical application for the slip compensation feature. The PLC controls the frequency reference for all four of the drives. Drive No. 1 and Drive No. 3 control the speed of the belt conveyor. Slip compensation is used to maintain the RPM independent of load changes caused by the cutter or dough feed. By maintaining the required RPM, the baking time remains constant and therefore the end product is consistent.

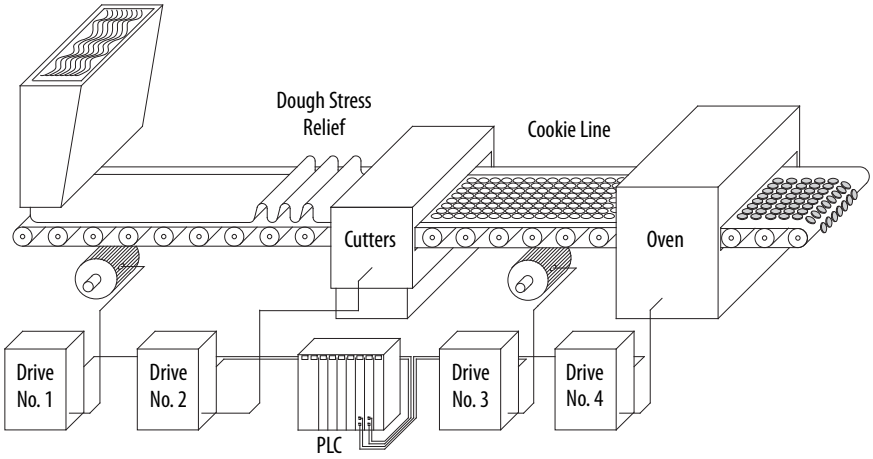

Slip Regulator

The slip regulator is used to compensate for temperature changes in an induction motor when FOC is used. The slip regulator uses a model of the motor to determine the desired d-axis voltage for a given operating point. A PI regulator is then used to change the drive's slip gain controlling the d-axis motor voltage. This in turn compensates for motor temperature (resistance) changes. The operation of the slip regulator is limited to regions where there is sufficient voltage (feedback or estimate) for the regulator to converge.

As default the slip regulator is enabled.

Do not disable this regulator. If you feel you need to disable this function, consult the factory for verification.

Motor Control

Topic	Page
Carrier (PWM) Frequency	196
Dynamic Braking	197
Flux Braking	216
Flux Regulator	218
Flux Up	218
High Resolution Feedback	220
Inertia Adaption	221
Inertia Compensation	223
Load Observer	225
Motor Control Modes	226
Motor Types	235
Notch Filter	244
Regen Power Limit	247
Speed Reference	251
Speed Regulation	260
Torque Reference	262
Speed Torque Position	266

Carrier (PWM) Frequency

P38 [PWM Frequency] sets the carrier frequency at which the inverter output IGBTs (Insulated Gate Bipolar Transistors) switch. In general, use the lowest possible switching frequency that is acceptable for the particular application. An increased carrier frequency causes less motor heating and lowers the audible noise from the motor. However, it causes the IGBTs to heat up faster than by using the factory default PWM frequency of 4 kHz or 2 kHz depending on drive's the frame size. The higher switching frequency smoothes the current waveform. This reduces vibration in the motor windings and laminations reducing audible noise. This is desirable in applications where motors are installed close to control rooms or in domestic environments. See Figure 21 and note the output current at 2 kHz and 4 kHz. The smoothing of the current waveform continues 12 kHz.

The maximum carrier frequency per frame size and the derating guidelines according to PWM frequency can be found in the PowerFlex 750-Series AC Drives Technical Data, publication 750-TD001.

Figure 21 - Current at 2 kHz and 4 kHz PWM Frequency

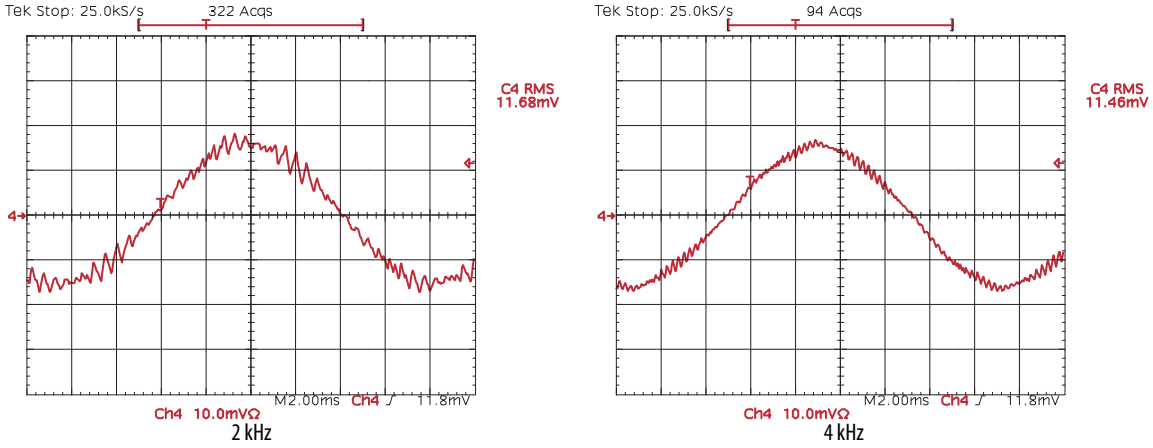

Some undesirable effects of higher switching frequencies include higher cable charging currents, higher potential for common mode noise and an increased risk of motor winding insulation breakdown due to the reflected wave phenomenon. Refer to the Wiring and Grounding Guidelines for PWM Drives, publication DRIVES-IN001 for further information. A very large majority of all drive applications will perform adequately at 2 kHz or 4 kHz.

Some applications require a fixed minimum PWM frequency (that is, using a sine wave filter in the output of the drive). In this case, P40 [Mtr Options Cfg] Bit 9 "PWM FreqLock" should be set to prevent the drive from lowering its carrier frequency due to a drive overload condition.

Dynamic Braking

When an induction motor's rotor is turning slower than the synchronous speed set by the drive's output power; the motor is transforming electrical energy obtained from the drive into mechanical energy available at the drive shaft of the motor. This process is referred to as motoring.

When the rotor is turning faster than the synchronous speed set by the drive's output power, the motor is transforming mechanical energy available at the drive shaft of the motor into electrical energy that can be transferred back into the utility grid. This process is referred to as regeneration.

On most AC PWM drives, the AC power available from the fixed frequency utility grid is first converted into DC power by means of a diode rectifier bridge or controlled SCR bridge, before being inverted into variable frequency AC power. These diode or SCR bridges are very cost effective, but can handle power in only one direction, and that direction is the motoring direction. If the motor is regenerating, the bridge is unable to conduct the necessary negative DC current, and the DC bus voltage increases until the drive trips on a Bus Overvoltage fault.

There are bridge configurations, using either SCRs or Transistors that have the ability to transform DC regenerative electrical energy into fixed frequency utility electrical energy but are expensive. A more cost effective solution is to provide a Transistor Chopper on the DC bus of the AC PWM drive that feeds a power resistor, which transforms the regenerative electrical energy into thermal heat energy, which is dissipated into the local environment.

This process is generally called Dynamic Braking, with the Chopper Transistor and related control and components called the Chopper Module, and the power resistor called the Dynamic Brake Resistor. The entire assembly of Chopper Module with Dynamic Brake Resistor is sometime referred to as the Dynamic Brake Module.

Chopper Modules are designed to be applied in parallel if the current rating is insufficient for the application. One Chopper Module is the designated Master Chopper Module, while any other Modules are the designated Follower Modules. Two lights have been provided on the front of the enclosure to indicate Chopper Module operation – the DC Power light and the Brake On light. The DC Power light is lit when DC power has been applied to the Chopper Module. The Brake On light is lit when the Chopper Module is operating or chopping and is a flickering type of indication.

Update: As of December of 2010, Rockwell Automation no longer has a Chopper Module product as well as a Dynamic Braking Module product. The light configuration stated above was specific to the Rockwell Automation product.

How it Works

There are two different types of control for dynamic braking, hysteretic control and PWM control. Each used by themselves in a standard stand alone product has no advantage over the other. The preferred control is the PWM method when the application is common DC bus. This advantage is described below.

Hysteretic Control

The hysteretic method of dynamic braking uses a voltage sensing circuit to monitor the DC bus. As the DC bus voltage increases to the V_{dc_on} level the brake IGBT is turned on and is left on until the voltage drops to the V_{dc_off} level, which is not so desirable in common DC bus applications—see below. Some PowerFlex drives allow the V_{dc_off} level, [DB Threshold], to be adjusted if the application required it. Setting this level lower makes the dynamic braking more responsive but could lead to excessive DB activation.

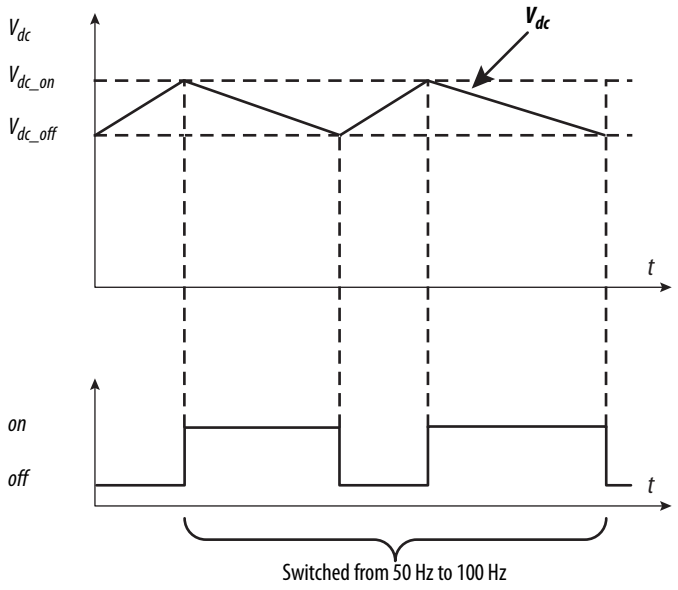

PWM Control

This type of control to operate the brake IGBT is similar to the way output voltage to the motor is controlled. As the DC bus voltage increases and hits some predetermined limit the brake IGBT is turned on/off according to a control algorithm switched at 1 kHz. This type of control virtually eliminates bus ripple. The big advantage is when this type of control is in a common bus configuration.

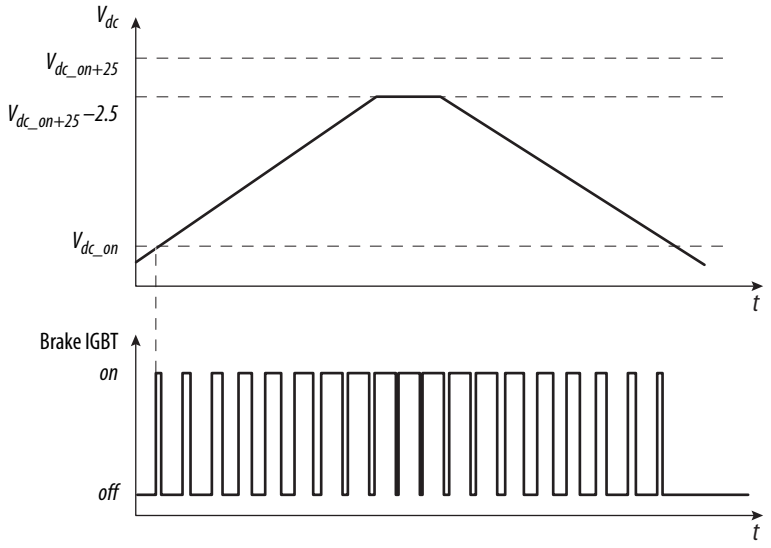

Duty Cycle

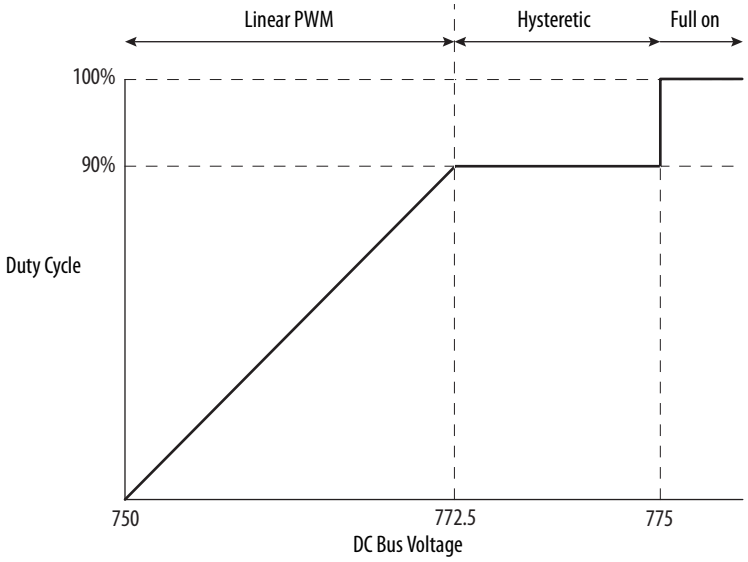

Common DC Bus Applications

In a common bus configuration when a dynamic braking resistor is installed on each drive sharing the DC bus, it's possible that the brake IGBT in some drives will not turn on, giving the impression that the drive is not functioning correctly or seeing one drive's brake IGBT failing consistently while the other drives are fine. Looking at the below diagram, it shows the DC bus level for two drives on common bus. The delta between these voltages are exaggerated for clarity. As the voltage increases, the Drive #1 IGBT turns on and decreases the voltage level before Drive #2 sees voltage high enough to be told to turn on. This results in Drive #1 doing all the dynamic braking. Now this situation could be alright as long as the minimum ohmic value for resistance is not violated and the regen event isn't so great that a single resistor can't handle the power. Of course, if there is a large regen event where the voltage continues to rise after Drive #1 has turned on, Drive #2 fires its IGBT when it reaches the voltage limit.

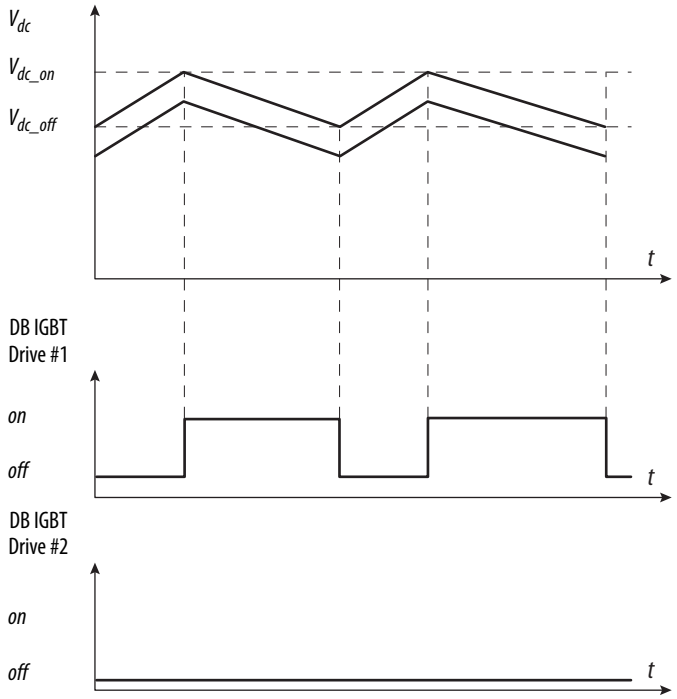

Here are two drives with PWM DB control on a common bus. Because one drive turns on at a certain duty cycle the bus voltage is likely to continue to rise guaranteeing that the other drive's IGBT turns on (at a different duty cycle).

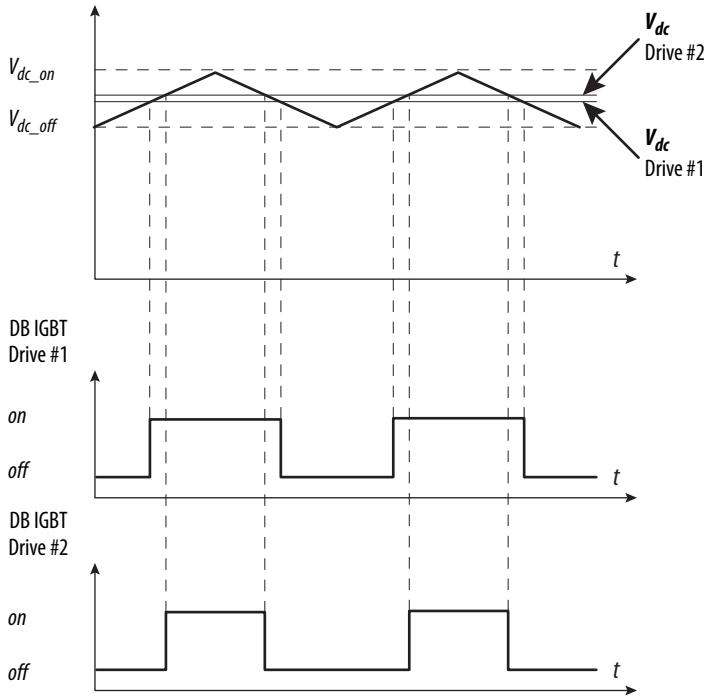

How to Select A Chopper Module and Dynamic Brake Resistor

In general, the motor power rating, speed, torque, and details regarding the Regenerative mode of operation is needed to estimate what Chopper Module rating and Dynamic Brake Resistor value to use. A rule of thumb to use is that a Dynamic Brake Module can be specified when regenerative energy is dissipated on an occasional or periodic basis. When a drive is consistently operating in the Regenerative mode of operation, consider utilizing equipment that transforms the electrical energy back to the fixed frequency utility.

The peak regenerative power of the drive must be calculated to determine the maximum Ohmic value of the Dynamic Brake Resistor and to estimate the minimum current rating of the Chopper Module. The Rating of the Chopper Module is chosen from the Brake Chopper Module manual. Once the Chopper Module current rating is known, a minimum Dynamic Brake Resistance value is also known. A range of allowable Dynamic Brake Ohmic values is now known. These values exist from the minimum value set by the Chopper Transistor current rating to a maximum value set by the peak regenerative power developed by the drive to decelerate or satisfy other regenerative applications. If a Dynamic Brake Resistance value less than the minimum imposed by the choice of the Chopper Module is made and applied, damage can occur to the Chopper Transistor. If a Dynamic Brake Resistance value greater than the maximum imposed by the choice of the peak regenerative drive power is made and applied,

the drive can trip off due to transient DC bus overvoltage problems. Once the choice of the approximate Ohmic value of the Dynamic Brake Resistor is made, the wattage rating of the Dynamic Brake Resistor can be made.

The wattage rating of the Dynamic Brake Resistor is estimated by applying the knowledge of the drive motoring and regenerating modes of operation. The average power dissipation of the Regenerative mode must be estimated and the wattage of the Dynamic Brake Resistor chosen to be slightly greater than the average power dissipation of the drive. If the Dynamic Brake Resistor has a large thermodynamic heat capacity, the resistor element is able to absorb a large amount of energy without the temperature of the resistor element exceeding the operational temperature rating. Thermal time constants in the order of 50 seconds and higher satisfy the criteria of large heat capacities for these applications. If a resistor has a small heat capacity, the temperature of the resistor element could exceed the maximum temperature limits during the application of pulse power to the element and could exceed the safe temperature limits of the resistor.

The peak regenerative power can be calculated in English units (Horsepower), in The International System of Units (SI) (Watts), or in the per unit system (pu), which is dimensionless for the most part. In any event, the final number must in Watts of power to estimate Dynamic Brake Ohmic value. Calculations in this page are demonstrated in SI units.

Speed, Torque, Power Profile

The following figure is a typical dynamic braking application. The top trace represents speed and is designated by the omega symbol. In the profile the motor is accelerated to some speed, it holds that speed for a period of time and is then decelerated. This deceleration is not necessarily to zero speed. The cycle is then repeated.

The middle trace represents motor torque. Torque starts out high as the motor is accelerated then drops down to maintain the commanded speed. Then the torque turns negative as the motor is decelerated. The cycle is then repeated.

The bottom trace represents motor power. Power increases as the motor speed increases. Power decreases some to maintain the commanded speed then goes

negative when deceleration starts. (this point called -Pb is the first value that needs to be calculated). The cycle is then repeated.

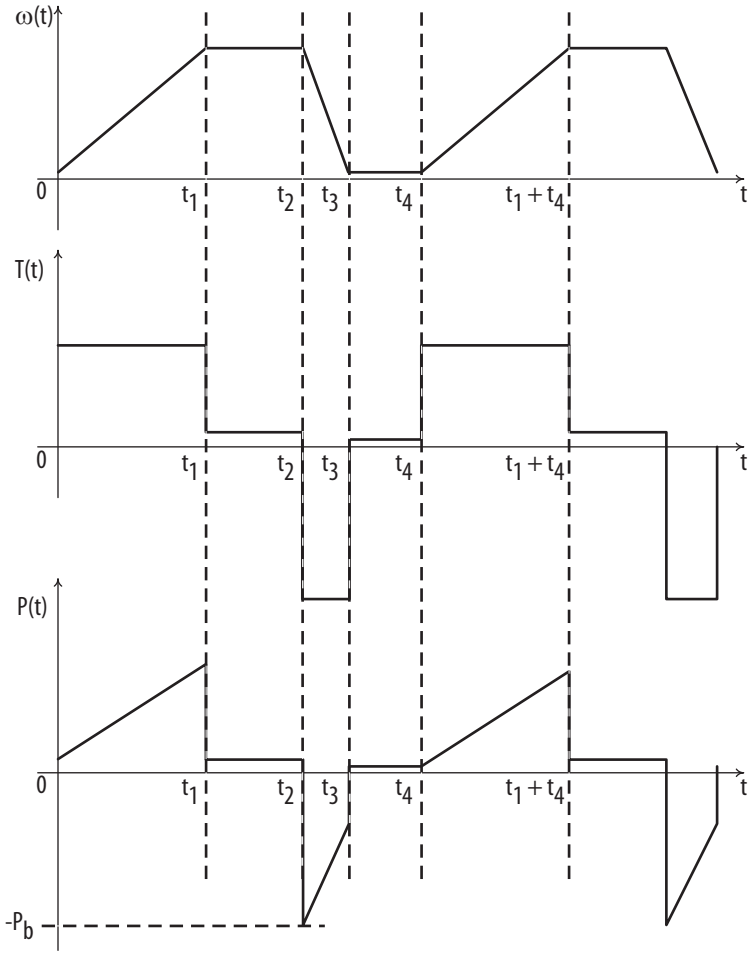

Dynamic Braking Module (no longer a Rockwell Automation product)

Figure 22 shows a simplified schematic of a Chopper Module with Dynamic Brake Resistor. The Chopper Module is shown connected to the positive and negative DC bus conductors of an AC PWM Drive. The two series connected Bus Caps are part of the DC bus filter of the AC Drive. The significant power components of the Chopper Module are the protective fusing, the Crowbar SCR, the Chopper Transistor (an IGBT), the Chopper Transistor Voltage Control (hysteretic voltage comparator), and a freewheel diode for the Dynamic Brake Resistor.

The protective fuse is sized to work in conjunction with the Crowbar SCR. Sensing circuitry within the Chopper Transistor Voltage Control determines if abnormal conditions exist within the Chopper Module. One of these abnormal conditions is a shorted Chopper Transistor. If this condition is sensed, the Chopper Transistor Voltage Control fires the Crowbar SCR, shorting the DC

bus, and melting the fuse links. This action isolates the Chopper Module from the DC bus until the problem can be resolved.

The Chopper Transistor is an Isolated Gate Bipolar Transistor (IGBT). There are several transistor ratings that are used in the various Chopper Module ratings. The most important rating is the collector current rating of the Chopper Transistor that helps to determine the minimum Ohmic value used for the Dynamic Brake Resistor. The Chopper Transistor is either ON or OFF, connecting the Dynamic Brake Resistor to the DC bus and dissipating power, or isolating the resistor from the DC bus.

The Chopper Transistor Voltage Control regulates the voltage of the DC bus during regeneration. The average value of DC bus voltage is 375V DC (for 230V AC input), 750V DC (for 460V AC input), and 937.5V DC (for 575V AC input). The voltage dividers reduce the DC bus voltage to a low enough value that is usable in signal circuit isolation and control. The DC bus feedback voltage from the voltage dividers is compared to a reference voltage to actuate the Chopper Transistor.

The Freewheel Diode (FWD) in parallel with the Dynamic Brake Resistor enables any magnetic energy stored in the parasitic inductance of that circuit to be safely dissipated during turn off of the Chopper Transistor.

Figure 22 - Chopper Module Schematic

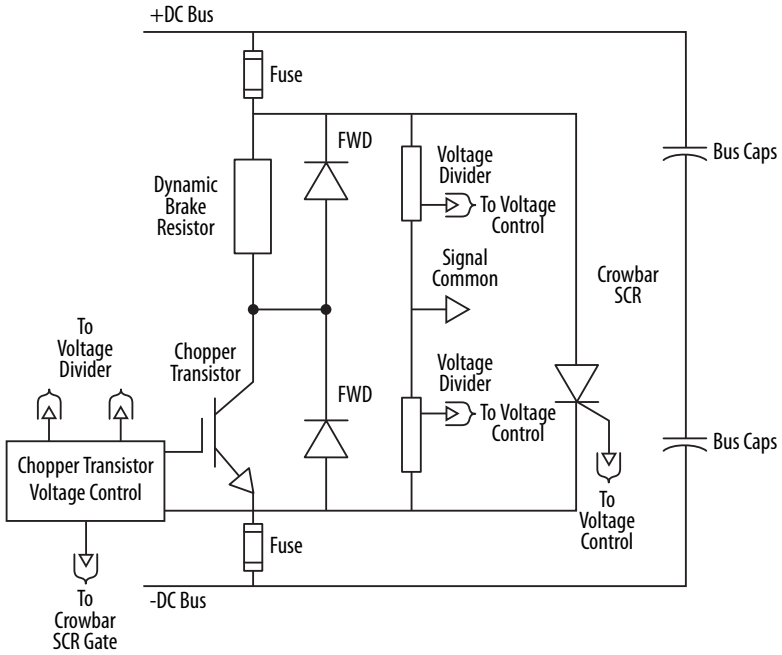

Sizing the Dynamic Brake Module Gather the following information.

1. The nameplate power rating of the motor in watts, kilowatts, or horsepower.
2. The nameplate speed rating of the motor in rpm or rps.

3. The motor inertia and load inertia in kilogram-meters2, or lb•ft^2.
4. The gear ratio, if a gear is present between the motor and load, GR.
5. Review the Speed, Torque Power profile of the application.

Equations used for calculating Dynamic Braking values use the following variables.

$\omega(t)$ = The motor shaft speed in Radians/second, or $\omega Rad/s = \frac{2\pi N}{60} RPM$

$N_{(t)}$ = The motor shaft speed in Revolutions Per Minute, or RPM

$T_{(t)}$ = The motor shaft torque in Newton-meters, 1.01 lb•ft - 1.355818N•m

$P_{(t)}$ = The motor shaft power in Watts, 1.0HP = 746 Watts

$-P_b$ = The motor shaft peak regenerative power in Watts

Step 1 – Determine the Total Inertia

$J_T = J_m + GR^2 \times J_L$

J_T = Total inertia reflected to the motor shaft, kilogram-meters^2, kg•m^2, or pound-feet^2, lb•ft^2

J_m = Motor inertia, kilogram-meters2, kg•m^2, or pound-feet2, lb•ft^2

GR = The gear ratio for any gear between motor and load, dimentionless

J_L = Load inertia, kilogram-meters2, kg•m^2, or pound-feet2, lb•ft^2 – 1 lb•ft^2 = 0.04214011 kg•m^2

Step 2 – Calculate the Peak Braking Power

$$P_b = \frac{J_T \times \omega^2}{t_3 - t_2}$$

J_T = Total inertia reflected to the motor shaft, kg•m^2

ω = rated angular rotational speed, $Rad/s = \frac{2\pi N}{60}$

N = Rated motor speed, RPM

$t_3 - t_2$ = total time of deceleration from rated speed to 0 speed, in seconds

P_b = peak braking power, watts (1.0 HP = 746 Watts)

Compare the peak braking power to that of the rated motor power, if the peak braking power is greater that 1.5 times that of the motor, the deceleration time, ($t_3 - t_2$), needs to be increased so that the drive does not go into current limit. Use 1.5 times because the drive can handle 150% current maximum for 3 seconds.

Peak power can be reduced by the losses of the motor and inverter.

Step 3 – Calculating the Maximum Dynamic Brake Resistance Value

$$R_{db1} = \frac{V_d^2}{P_b}$$

V_d = The value of DC bus voltage that the chopper module regulates at and is equal to 375V DC, 750V DC, or 937.5V DC

P_b = The peak braking power calculated in Step 2

R_{db1} = The maximum allowable value for the dynamic brake resistor

Choose a Dynamic Brake resistance value that is less than the value calculated in Step 3. If the value is greater than the calculated value, the drive can trip on DC bus overvoltage. Remember to account for resistor tolerances.

Step 4 – Choosing the correct Dynamic Brake Module

Cat. No.	Resistance	Wattage
240 Volt		
KA005	28 ohms	666 watts
KA010	13.2 ohms	1650 watts
KA050	N/A	N/A
460 Volt		
KB005	108 ohms	1500 watts
KB010	52.7 ohms	2063 watts
KB050	10.5 ohms	7000 watts
600 Volt		
KC005	108 ohms	1500 watts
KC010	52.7 ohms	2063 watts
KC050	15.8 ohms	8000 watts

In the table above, choose the correct Dynamic Brake Module based upon the resistance value being less than the maximum value of resistance calculated in Step 3. If the Dynamic Brake Resistor value of one Dynamic Brake Module is not sufficiently low, consider using up to three Dynamic Brake Modules in parallel, such that the parallel Dynamic Brake resistance is less than Rdb1 calculated in

Step 3. If the parallel combination of Dynamic Brake Modules becomes too complicated for the application, consider using a Brake Chopper Module with a separately specified Dynamic Brake Resistor.

Step 5 – Estimate average power

It is assumed that the application exhibits a periodic function of acceleration and deceleration. If $(t_3 - t_2)$ = the time in seconds necessary for deceleration from rated speed to 0 speed, and t_4 is the time in seconds before the process repeats itself, then the average duty cycle is $(t_3 - t_2)/t_4$. The power as a function of time is a linearly decreasing function from a value equal to the peak regenerative power to 0 after $(t_3 - t_2)$ seconds have elapsed. The average power regenerated over the interval of $(t_3 - t_2)$ seconds is Pb/2. The average power in watts regenerated over the period t_4 is:

$$P_{av} = \frac{(t_3 - t_2)}{t_4} \times \frac{P_b}{2}$$

P_{av} = Average dynamic brake resistor dissipation, in watts

$t_3 - t_2$ = Elapsed time to decelerate from rated speed to 0 speed, in seconds

t_4 = Total cycle time or period of process, in seconds

P_b = Peak braking power, in watts

The Dynamic Brake Resistor power rating of the Dynamic Brake Module (singly or two in parallel) that is chosen must be greater than the value calculated in Step 5. If it is not, then a Brake Chopper Module with the suitable Dynamic Brake Resistor must be specified for the application.

Step 6 – Calculate Percent Average Load

The calculation of AL is the Dynamic Brake Resistor load expressed as a percent. Pdb is the sum of the Dynamic Brake Module dissipation capacity and is obtained from the table in Step 4. This gives a data point for a line to be drawn on the curve in Figure 3. The number calculated for AL must be less than 100%. If AL is greater than 100%, an error was made in a calculation or the wrong Dynamic Brake Module was selected.

$$AL = \frac{P_{av}}{P_{db}} \times 100$$

AL = Average load in percent of Dynamic Brake Resistor

P_{av} = Average dynamic brake resistor dissipation calculated in Step 5 (Watts)

P_{db} = Steady state power dissipation capacity of resistors obtained from the table in Step 4 (Watts)

Step 7 – Calculate Percent Peak Load

The calculation of PL in percent gives the percentage of the instantaneous power dissipated by the Dynamic Brake Resistors relative to the steady state power dissipation capacity of the resistors. This gives a data point to be drawn on the curve of Figure 3. The number calculated for PL commonly falls between 300% and 600% for the Dynamic Brake Modules. A calculated number for PL of less than 100% indicates that the Dynamic Brake Resistor has a higher steady state power dissipation capacity than is necessary.

$$PL = \frac{P_b}{P_{db}} \times 100$$

PL = Peak load in percent of Dynamic Brake Resistor

P_{av} = Peak braking power calculated in Step 2 (Watts)

P_{db} = Steady state power dissipation capacity of resistors obtained from the table in Step 4 (Watts)

Step 8 – Plot PL and AL on Curve

Draw a horizontal line equal to the value of AL (Average Load) in percent as calculated in Step 6. This value must be less than 100%. Pick a point on the vertical axis equal to the value of PL (Peak Load) in percent as calculated in Step 7. This value will be greater than 100%. Draw a vertical line at (t_3 - t_2) seconds such that the line intersects the AL line at right angles. Label the intersection Point 1. Draw a straight line from PL on the vertical axis to Point 1 on the AL line. This line is the power curve described by the motor as it decelerates to minimum speed.

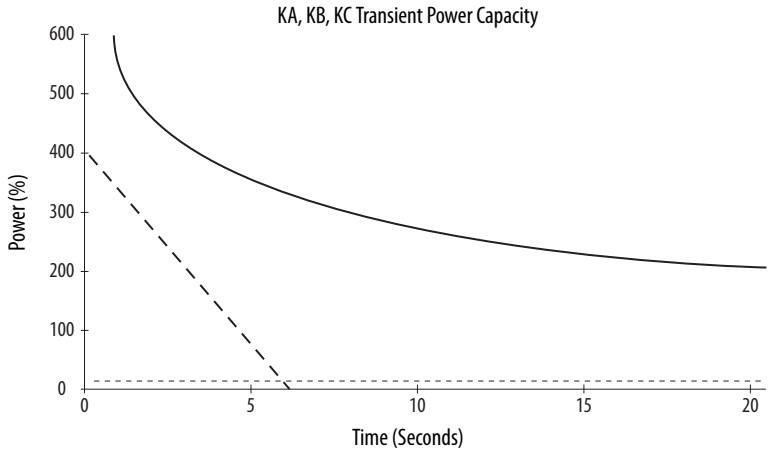

If the line you drew lies to the left of the constant temperature power curve of the Dynamic Brake Resistor, then there is no application problem. If any portion of the line lies to the right of the constant temperature power curve of the Dynamic Brake Resistor, then there is an application problem. The application problem is that the Dynamic Brake Resistor is exceeding its rated temperature during the interval that the transient power curve is to the right of the resistor power curve capacity. It is prudent to parallel another Dynamic Brake Module or apply a Brake Chopper Module with a separate Dynamic Brake Resistor.

Sizing the Chopper and Resistors

Chopper and Resistors (no longer a Rockwell Automation product)

Sizing the chopper module is the same as the dynamic brake module with a couple of added steps. Because the chopper is separate from the resistors, an additional calculation for current needs to be made. Additionally a calculation for watt-seconds or joules needs to be made for resistor sizing.

Step 1 – Determine the Total Inertia

$J_T = J_m + GR^2 \times J_L$

J_T = Total inertia reflected to the motor shaft, kilogram-meters^2, kg•m^2, or pound-feet^2, lb•ft^2

J_m = motor inertia, kilogram-meters2, kg•m^2, or pound-feet2, lb•ft^2

GR^2 = the gear ratio for any gear between motor and load, dimensionless

J_L = load inertia, kilogram-meters2, kg•m^2, or pound-feet2, lb•ft^2 (1.0 lb•ft^2 = 0.04214011 kg•m^2)

Step 2 – Calculate the Peak Braking Power

$$P_b = \frac{J_T \times \omega^2}{t_3 - t_2}$$

J_T = Total inertia reflected to the motor shaft, kg•m^2

ω = rated angular rotational speed, $Rad/s = \frac{2\pi N}{60}$

N = Rated motor speed, RPM

$t_3 - t_2$ = total time of deceleration from the rated speed to 0 speed, seconds

P_b = peak braking power, watts (1.0HP = 746 Watts)

Compare the peak braking power to that of the rated motor power, if the peak braking power is greater that 1.5 times that of the motor, then the deceleration time, $(t_3 - t_2)$, needs to be increased so that the drive does not go into current limit. Use 1.5 times because the drive can handle 150% current maximum for 3 seconds.

Peak power can be reduced by the losses of the motor and inverter.

Step 3 – Calculating the Maximum Dynamic Brake Resistance Value

$$R_{db1} = \frac{V_d^2}{p_b}$$

V_d = The value of DC bus voltage that the chopper module regulates at and is equal to 375V DC, 750V DC, or 937.5V DC

P_b = The peak braking power calculated in Step 2

R_{db1} = The maximum allowable value for the dynamic brake resistor

The choice of the Dynamic Brake resistance value will be less than the value calculated in Step 3. If the value is greater than the calculated value, the drive can trip on DC bus overvoltage. Remember to account for resistor tolerances.

Step 4 – Choosing the Chopper Module

$$I_{dl} = \frac{V_d}{R_{dbl}}$$

I_{dl} = The minimum current flowing through the chopper module transistor

V_d = The value of DC bus voltage chosen in Step 3

R_{dbl} = The value of the dynamic brake resistor calculated in Step 3

The value of I_{d1} sets the minimum value of current rating for the Chopper Module. When the Chopper Module choice has been made, the current rating of the Module Transistor must be greater than or equal to the calculated value for I_{d1}. See the table below for rating values.

Drive Voltage (Volts AC)	Turn-On Voltage (Volts DC)	Cat. No.	Peak Transistor Current Rating (Amps)	Minimum DB Resistor Value (Ohms)
230	375	WA018	50	9.0
		WA070	200	2.3
		WA115	400	1.25
460	750	WB009	25	37
		WB035	100	9.0
		WB110	400	2.5
575	935	WC009	25	46
		WC035	75	15.5
		WC085	400	3.0

Step 5 – Determine the Minimum Resistance

Each chopper module in the table above has a minimum resistance associated with it. If a resistance lower than the value show in the table is connected to the chopper module, the brake transistor is most likely be damaged.

Step 6 – Choosing the Dynamic Brake Resistance Value

To avoid damage to this transistor and get the desired braking performance, select a resistor with a resistance between the maximum resistance calculated in Step 3 and the minimum resistance of the selected chopper module.

Step 7 – Estimating the Minimum Wattage requirements for the Dynamic Brake Resistor

It is assumed that the application exhibits a periodic function of acceleration and deceleration. If $(t_3 - t_2)$ = the time in seconds necessary for deceleration from rated speed to 0 speed, and t_4 is the time in seconds before the process repeats itself, then the average duty cycle is $(t_3 - t_2)/t_4$. The power as a function of time is a linearly decreasing function from a value equal to the peak regenerative power to 0 after $(t_3 - t_2)$ seconds have elapsed. The average power regenerated over the interval of $(t_3 - t_2)$ seconds is Pb/2. The average power in watts regenerated over the period t_4 is:

$$P_{av} = \frac{(t_3 - t_2)}{t_4} \times \frac{P_b}{2}$$

P_{av} = average dynamic brake resistor dissipation, watts

$t_3 - t_2$ = Elapsed time to decelerate from rated speed to 0 speed, seconds

t_4 = Total cycle time or period of process, seconds

P_b = Peak braking power, watts

The Dynamic Brake Resistor power rating in watts that is chosen will be equal to or greater than the value calculated in Step 7.

Step 8 – Calculate the requires Watt-Seconds (joules) for the resistor

To be sure the resistor's thermal capabilities are not violated, a calculation to determine the amount of energy dissipated into the resistor is made. This determines the amount joules the resistor must be able to absorb.

$$P_{ws} = (t_3 - t_2) \times \frac{P_b}{2}$$

P_{ws} = Required watt - seconds of the resistor

$t_3 - t_2$ = Elapsed time to decelerate from ωb speed to ω0 speed, seconds

P_b = Peak braking power, watts

Internal Brake IGBT for PowerFlex 755 Drives

Sizing Resistors for an internal DB IGBT

Sizing resistors for the internal DB IGBT Uses the same formula's as previous, and is very similar to the Chopper Module sizing.

Step 1 – Determine the Total Inertia

$$J_T = J_m + GR^2 \times J_L$$

J_T = Total inertia reflected to the motor shaft, kilogram-meters2, kg•m^2, or pound-feet2, lb•ft^2

J_m = motor inertia, kilogram-meters2, kg•m^2, or pound-feet2, lb•ft^2

GR = The gear ratio for any gear between motor and load, dimensionless

J_L = load inertia, kilogram-meters2, kg•m^2, or pound-feet2, lb•ft^2 (1.0 lb•ft^2 = 0.04214011 kg•m^2)

Step 2 – Calculate the Peak Braking Power

$$P_b = \frac{J_T \times \omega^2}{t_3 - t_2}$$

J_T = Total inertia reflected to the motor shaft, kg•m^2

ω = rated angular rotational speed, $Rad/s = \frac{2\pi N}{60}$

N = Rated motor speed, RPM

$t_3 - t_2$ = total time of deceleration from the rated speed to 0 speed, seconds

P_b = peak braking power, watts (1.0HP = 746 Watts)

Compare the peak braking power to that of the rated motor power, if the peak braking power is greater that 1.5 times that of the motor, then the deceleration time, ($t_3 - t_2$), needs to be increased so that the drive does not go into current limit. Use 1.5 times because the drive can handle 150% current maximum for 3 seconds.

Peak power can be reduced by the losses of the motor and inverter.

Step 3 – Calculating the Maximum Dynamic Brake Resistance Value

$$R_{db1} = \frac{V_d^2}{p_b}$$

V_d = The value of DC bus voltage that the drive regulates at and is equal to 375V DC, 750V DC, or 937.5V DC depending on input voltage

P_b = The peak braking power calculated in Step 2

R_{db1} = The maximum allowable value for the dynamic brake resistor

The choice of the Dynamic Brake resistance value will be less than the value calculated in Step 3. If the value is greater than the calculated value, the drive can trip on DC bus overvoltage. Remember to account for resistor tolerances.

Step 4 – Determine the Minimum Resistance

Each drive with an internal DB IGBT has a minimum resistance associated with it. If a resistance lower than the minimum value for a given drive is connected, the brake transistor will likely be damaged. Below is a table of minimum resistances for frame 2 through 7 PowerFlex 750-Series drives.

Frame	400V				480V			
	ND kW	Catalog Code	Min Resistance	Max DB Current	ND HP	Catalog Code	Min Resistance	Max DB Current
2	0.75	C2P1	31.6	25	1.0	D2P1	31.6	25
	1.5	C3P5	31.6	25	2.0	D3P4	31.6	25
	2.2	C5P0	31.6	25	3.0	D5P0	31.6	25
	4.0	C8P7	31.6	25	5.0	D8P0	31.6	25
	5.5	C011	31.6	25	7.5	D011	31.6	25
	7.5	C015	31.6	25	10	D014	31.6	25
	11	C022	22.6	34.9	15	D022	22.6	34.9
3	15	C030	31.6	25	20	D027	31.6	25
	18.5	C037	31.6	25	25	D034	31.6	25
	22	C043	16.6	47.6	30	D040	16.6	47.6
4	30	C060	15.8	50	40	D052	15.8	50
	37	C072	15.8	50	50	D065	15.8	50
5	37	C072	7.9	100	50	D065	7.9	100
	45	C085	7.9	100	60	D077	7.9	100
	55	C104	7.9	100	75	D096	7.9	100
6	55	C104	3.3	239.4	75	D096	3.3	239.4
	75	C140	3.3	239.4	100	D125	3.3	239.4
	90	C170	3.3	239.4	125	D156	3.3	239.4
	110	C205	3.3	239.4	150	D186	3.3	239.4
	132	C260	3.3	239.4	200	D248	3.3	239.4
7	132	C260	2.4	329	200	D248	2.4	329
	160	C302	2.4	329	250	D302	2.4	329
	200	C367	2.4	329	300	D361	2.4	329
	250	C456	1.65	478.8	350	D415	1.65	478.8
	270	C477	1.65	478.8	400	D477	1.65	478.8

Step 5 – Choosing the Dynamic Brake Resistance Value

To avoid damage to this transistor and get the desired braking performance, select a resistor with a resistance between the maximum resistance calculated in Step 3 and the minimum resistance of the drive IGBT.

Step 6 – Estimating the Minimum Wattage requirements for the Dynamic Brake Resistor

It is assumed that the application exhibits a periodic function of acceleration and deceleration. If $(t_3 - t_2)$ = the time in seconds necessary for deceleration from rated speed to 0 speed, and t_4 is the time in seconds before the process repeats itself, then the average duty cycle is $(t_3 - t_2)/t_4$. The power as a function of time is a linearly decreasing function from a value equal to the peak regenerative power to 0 after $(t_3 - t_2)$ seconds have elapsed. The average power regenerated over the interval of $(t_3 - t_2)$ seconds is Pb/2. The average power in watts regenerated over the period t_4 is:

$$P_{av} = \frac{(t_3 - t_2)}{t_4} \times \frac{P_b}{2}$$

P_{av} = Average dynamic brake resistor dissipation, in watts

$t_3 - t_2$ = Elapsed time to decelerate from rated speed to 0 speed, in seconds

t_4 = Total cycle time or period of process, in seconds

P_b = Peak braking power, in watts

The Dynamic Brake Resistor power rating in watts that is chosen will be equal to or greater than the value calculated in Step 6.

Step 7 – Calculate the requires Watt-Seconds (joules) for the resistor

To be sure the resistor's thermal capabilities are not violated, a calculation to determine the amount of energy dissipated into the resistor is made. This determines the amount joules the resistor must be able to absorb

$$P_{ws} = (t_3 - t_2) \times \frac{P_b}{2}$$

P_{ws} = Required watt - seconds of the resistor

$t_3 - t_2$ = Elapsed time to decelerate from ωb speed to ω0 speed, seconds

P_b = Peak braking power, watts

Flux Braking

Flux Braking is an independent feature from the P370/371 [Stop Mode A/B] available in PowerFlex 750-Series drives. When enabled, flux braking is active during the decel ramp of a speed change. Flux braking changes the Volts per Hertz curve ratio outputting a higher voltage, relative to the normal V/Hz curve, to the motor causing over fluxing thus reducing the speed faster than just the decel ramp alone. This feature is not intended for high inertia loads because over fluxing can cause excessive heating in the motor. Very long decel times can build heat.

Flux Braking works in all motor control modes.

Table 11 - Flux Braking Parameters

Number	Parameter Name	Min / Max	Default
388	Flux Braking En	Disabled / Enabled	Disabled
389	Flux Braking Lmt	100.00 / 250.00 %	125.00
390	Flux Braking Ki	0.0 / 1000000.0	10000.0
391	Flux Braking Kp	0.0 / 1000000.0	0.0 (Disabled)

Traces

In all of the following plots the Accel/Decel times are 0.5 s. P372/373 [Bus Reg Mode A/B] is set to option 1 “Adjust Freq.” There is a fair amount of inertia connected to the motor shaft. P370/371 [Stop Mode A/B] is set to 1 “Ramp” to stop.

In the plot below the Flux Braking feature is disabled. Note the decel time. Here the bus regulator is controlling the stop time.

Flux Braking - Disabled

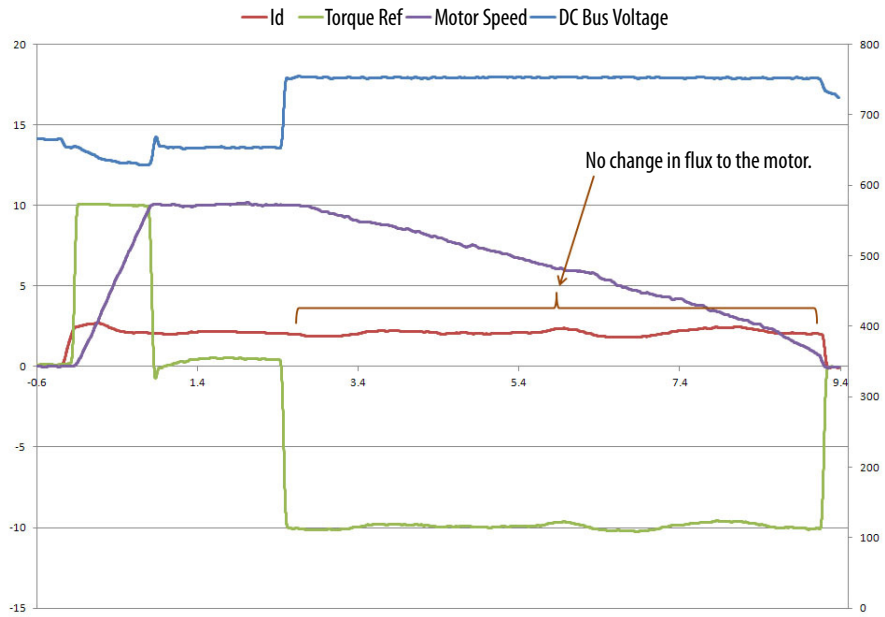

In the next plot all conditions are the same except the Flux Braking feature is enabled. Note the flux to the motor is increased and the decel time is shorter.

Flux Braking - Enabled

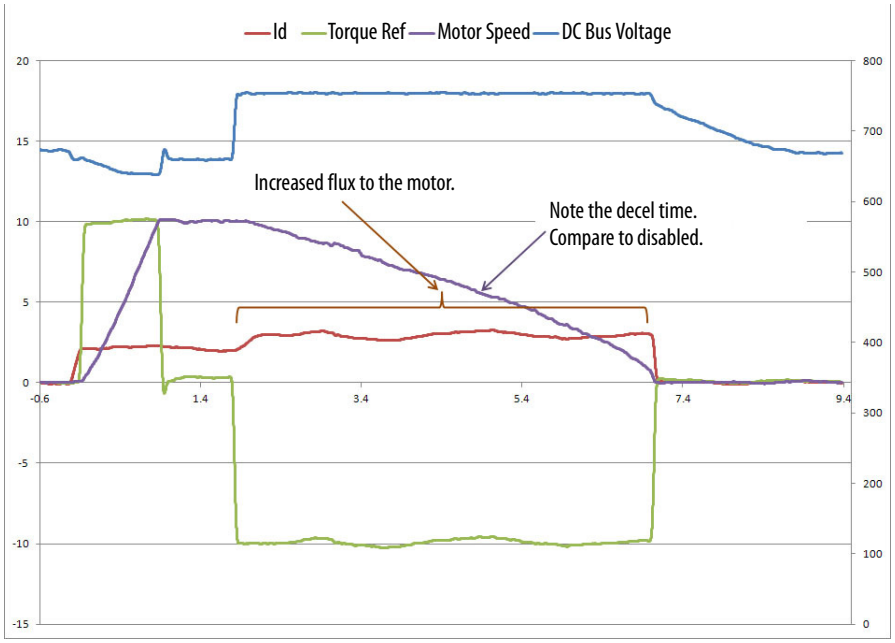

Finally the same test with the gains set to maximum levels. Slightly faster decel. The use of the gains vary with the connected load.

Flux Braking - Full Gains

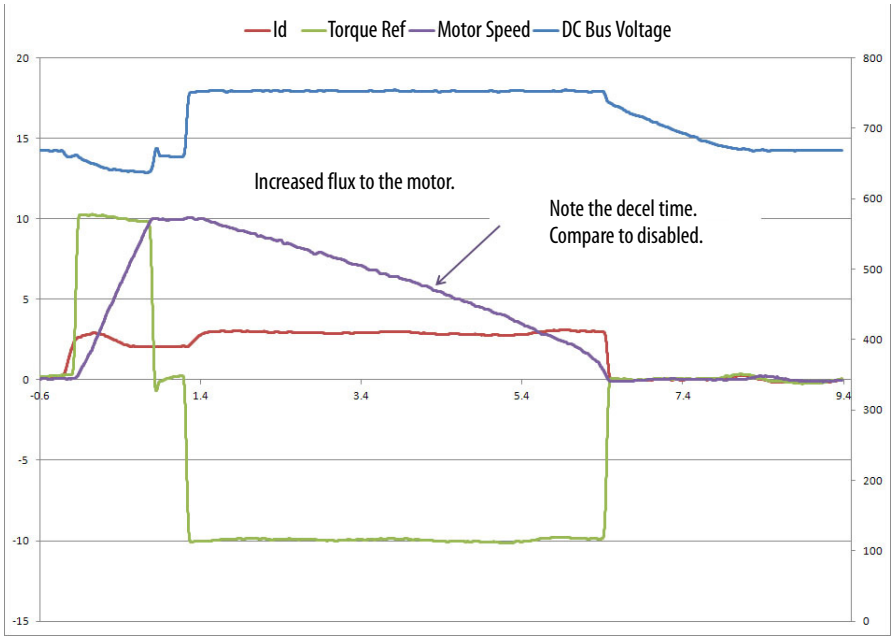

Flux Regulator

The flux regulator is used to control and limit the overall (fundamental) voltage applied to an induction motor when FOC is used. The flux regulator controls field weakening above base speed and maintains voltage margin for a current regulator. A variation of the induction motor flux regulator is used for PM motors for operation above base speed.

As default the flux regulator is enabled. When disabled, the current regulator becomes de-tuned.

Do not disable this regulator. If you feel you need to disable this function, consult the factory for verification.

Flux Up

AC induction motors require flux to be established before controlled torque can be developed. To build flux, voltage is applied. There are two methods to flux the motor.

The first method is Automatic during a normal start. Flux is established as the output voltage and frequency are applied to the motor. While the flux is being established, the unpredictable nature of the developed torque can cause the rotor to oscillate even though acceleration of the load can occur. In the motor, the acceleration profile may not follow the commanded acceleration profile due to the lack of developed torque.

Figure 23 - Accel Profile during Normal Start - No Flux Up

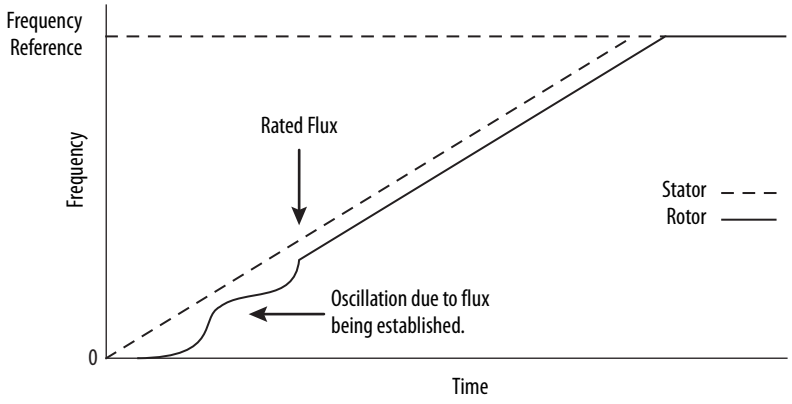

The second method is Manual. In this mode, DC current is applied to the motor so that the flux is established before rotation. The flux up time period is based on the level of flux up current and the rotor time constant of the motor. The flux up current is not user adjustable.

Figure 24 - Flux Up Current versus Flux Up Time

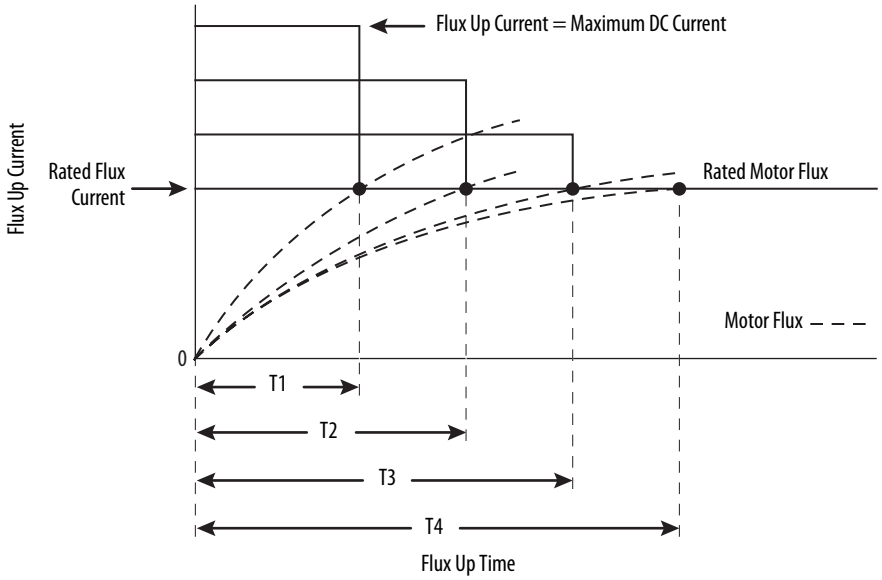

Once rated flux is reached in the motor, normal operation begins and the desired acceleration profile is achieved.

Rated Flux Reached

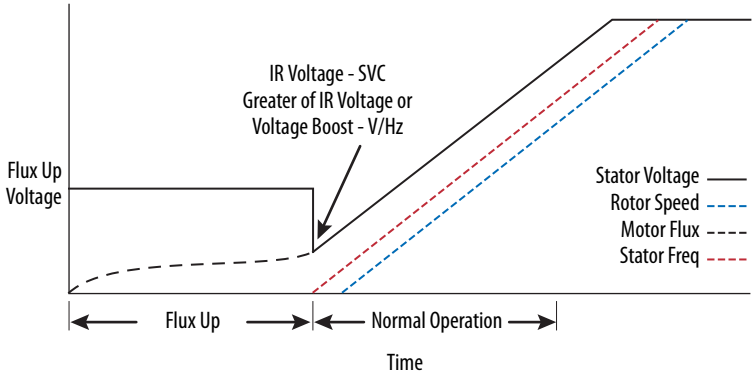

Once rated flux is reached in the motor, normal operation begins and the desired acceleration profile is achieved.

Parameters

File	Group	No.	Display Name Full Name Description	Values		Read-Write	Data Type
MOTOR CONTROL	Mtr Ctrl Options	43	**Flux Up Enable** Flux Up Enable "Manual" (0) – Flux is established for P44 [Flux Up Time] before initial acceleration. "Automatic" (1) – Flux is established for a calculated time period based on motor nameplate data before acceleration. P44 [Flux Up Time] is not used.	Default: Options:	1 = "Automatic" 0 = "Manual" 1 = "Automatic"	RW	32-bit Integer
		44	**Flux Up Time** Flux Up Time The amount of time the drive will use to try to achieve full motor stator flux. When a Start command is issued, DC current at P26 [Motor NP Amps] level is used to build stator flux before accelerating.	Units: Default: Min/Max:	Secs 0.0000 0.0000 / 5.0000	RW	Real

Applications

This function is usually associated with applications that require extended acceleration times. Out of the box, the drive is set to "Automatic" and attempts to get full motor stator flux based on motor nameplate information. In some cases the loading and ramp curve during acceleration could have an adverse affect on the drive's thermal manager. Some applications include mining conveyors or large centrifuges. This function gives you the ability to manually be sure the motor stator is fully fluxed up before acceleration by manually assigning a flux up time. It can produce a better acceleration at low frequencies without excessive current.

High Resolution Feedback

The Universal Feedback option module, PowerFlex 755 drives only, interpolates any sine/cosine signal into 1,048,576 counts per revolution.

The interpolation cannot be changed. It is 1,048,576 counts per revolution regardless of the native cycles per revolution of the sine/cosine. Interpolation is modified to 24 bits when P8 [FB0 Cfg] or P38 [FB1 Cfg] Bit 1 "24-bit Resol" is set.

An acceptable sine/cosine signal is a 1 volt peak-to-peak voltage with a 2.5 volt offset. Most feedback manufactures Sick (SSI), Stegmann (Hiperface), and Heidenhain (En Dat, non en dat) meet this requirement.

Inertia Adaption

Inertia adaption is used to compensate for lost motion, which occurs when a gear box and/or a springy coupling is present. Lost Motion describes the condition in which an input to a mechanism creates no corresponding displacement at the output. This is most noticeable in systems with large inertia ratios using a gearbox or flexible couplings. The term inertia adaption refers to how this function adapts or changes the dynamic inertia seen by the speed regulator. Inertia adaption can allow an increase in the speed regulator bandwidth, normally limited by the mechanical transmission, by up to four times. This feature is only available on PowerFlex 755 drives. P35 [Motor Ctrl Mode] must be set to vector control and use a motor speed feedback device. Inertia adaption is not enabled by default.

For example, a motor connected to a gearbox is shown.

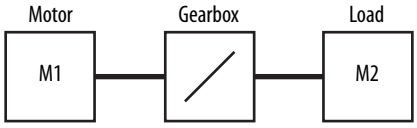

This gearbox can be represented by a spring (K) and gear backlash (BL).



When the speed of the motor increases, there is a period of time (represented by Δ x = backlash) before the teeth of the gearbox engage. After that time, there is some twisting (like a spring) in the shaft after the teeth of the gearbox engage. This lost motion causes mechanical instability and limits how high the speed regulator bandwidth can be set without causing instability. Inertia adaption detects the lost motion and a higher speed regulator bandwidth can be achieved without instability.

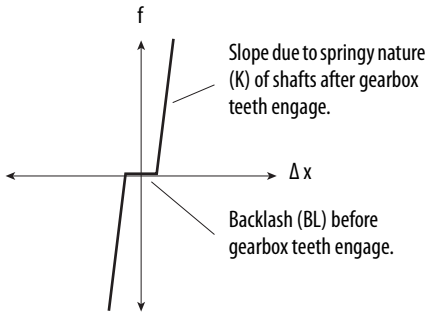

Configuration

Inertia adaption only works if there is valid inertia value entered in P76 [Total Inertia]. Total inertia is measured during an assisted startup procedure executed from the HIM or software wizard. The inertia tune can be executed manually by setting P70 [Autotune] to option 4 "Inertia Tune" and starting the drive.

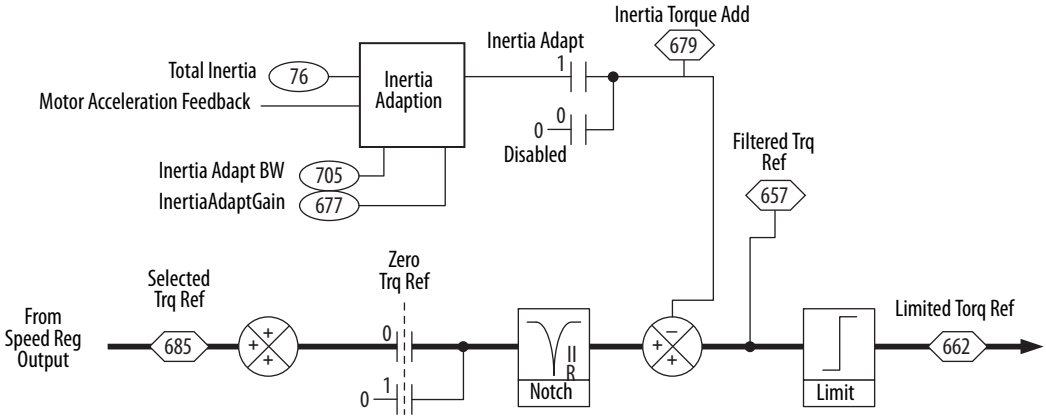

Activate inertia adaption by setting P704 [InAdp LdObs Mode] to option 1 "InertiaAdapt." Once activated, two filters are automatically updated, P705 [Inertia Adapt BW] and P710 [InertAdptFltrBW], when P636 [Speed Reg BW] is set to a non zero value. Gradually increase P636 [Speed Reg BW] while operating the motor and load. The final speed reg bandwidth exceeds the value before inertia adaption was activated providing the system meets the criteria mentioned below.

When Inertia adaption is activated, disable the two lead-lag filters present in the speed regulator (setting OFF). These filters are in the speed feedback path P637 [SReg FB Fltr Sel] and at the output of the speed regulator P657 [SReg OutFltr Sel]. Both filters are disabled by default.

The Inertia Adaption feature can be used in conjunction with inertia compensation to minimize the acceleration torque required from the Speed Regulator.

Refer to the PowerFlex 750-Series Programming Manual, publication 750-PM001, for detailed parameter explanation.

How does inertia adaption work?

- The inertia adaption algorithm uses a component of acceleration feedback to create a sort of electronic inertia.
- Electronic inertia supplements the inertia lost when the load is suddenly disconnected as through a gearbox or lost motion. In this way the velocity regulator does not see a dramatic change in inertia that is normally associated with load disconnect and potential instability.

Where is inertia adaption applied?

- Any system with an inertia ratio greater than 3:1 that is plagued by gear noise or resonance that can't achieve desired performance by ordinary tuning. (Inertia ratio is the ratio of system inertia to motor inertia.)
- Most high performance tracking or electronic line shaft systems.
- Most geared systems requiring higher bandwidths and stiffness.

What could be a disadvantage when using inertia adaption?

- It can generate a shrill noise with rigid couplings that lack lost motion or sufficient compliance. Do not use inertia adaption in such cases.
- It can produce a low level sound emanating from the motor. This is merely the inertia adaption in action and the sound does not affect performance nor does it harm the motor.

Inertia Compensation

Inertia Compensation is active only in PowerFlex 755 drive and in Flux Vector (FV) motor control modes selected by P35 [Motor Ctrl Mode].

During speed changes, a certain level of torque to respond is required due to load inertia. That level of torque is above the torque used to run at constant speed. Inertia compensation attempts to predict the motor torque required to accelerate and decelerate an inertial load. The Inertia compensation function calculates a feed forward torque signal based on proportional acceleration or deceleration rate of change of speed input and total inertia, also known as the derivative of speed with respect to time. Then that P699 [Inertia Comp Out] signal torque can be fed forward into the torque control, becoming an available input to the P313 [Actv SpTqPs Mode] selector to be summed with P660 [SReg Output] making for smoother accelerations and decelerations, especially with high inertia loads.

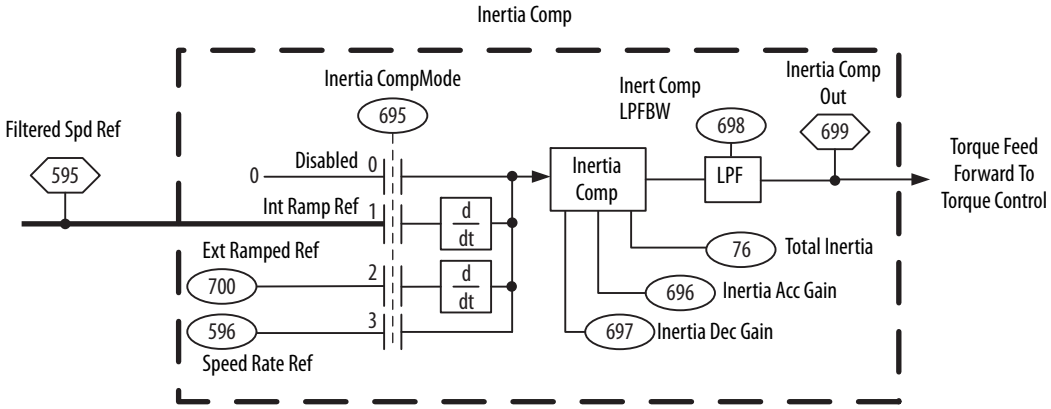

- Parameter 695 [Inertia CompMode] enables the Inertia Compensation and selects possible velocity reference input sources of motor speed as follows:
- "Disabled" (0) – Inertia compensation function is disabled. P699 [Inertia Comp Out] is zero so the motor torque reference is not affected.

- "Int Ramp Ref" (1) – Inertia compensation is enabled. The function is configured to use the rate of change of P595 [Filtered Spd Ref]. This is the typical setting that should be used for inertia compensation on a stand-alone drive.
- "Ext Ramp Ref" (2) – Inertia compensation is enabled. The function is configured to use the rate of change of P700 [Ext Ramped Ref]. This setting is available for applications that supply a ramped speed reference external to the drive.
- "Spd Rate Ref" (3) – Inertia compensation is enabled. The function is configured to use the P596 [Speed Rate Ref]. This parameter should contain a value that represents the rate of change of the motor speed reference. This setting is available for applications that supply a ramped speed reference external to the drive.

Parameter 76 [Total Inertia] is calculated during the autotune and is used along with the calculated acceleration or deceleration rate to calculate the torque adder.

Parameter 696 [Inertia Acc Gain] determines the gain for the inertia compensation during acceleration. A gain of 1 results in 100% compensation.

Parameter 697 [Inertia Dec Gain] determines the gain for the inertia compensation during deceleration. A gain of 1 results in 100% compensation.

Parameter 698 [Inertia Comp LPFBW] Inertia Compensation Low Pass Filter Bandwidth. Sets the bandwidth of a low pass filter for the inertia compensation function. The output of this filter supplies P699.

Parameter 699 [Inertia Comp Out] Inertia Compensation Output. Displays the output of the inertia compensation function.

Parameter 700 [Ext Ramped Ref] External Ramped Reference. This parameter is meant for an external motor speed ramp input signal. This signal will be used by the inertia compensation function when P695 [Inertia CompMode] = 2 "Ext Ramp Ref." This parameter will be entered in units of Hz or RPM, depending on the value of P300 [Speed Units].

Parameter 596 [Speed Rate Ref] Speed Rate Reference. This parameter is shared by both the Inertia Compensation and Speed Compensation functions.

A value shared by both the Inertia Compensation and Speed Compensation functions (active only in FV motor control modes), typically supplied by an external controller that is also providing a rate limited speed reference. The Speed Rate Reference corresponds to the derivative with respect to time of the speed reference signal. Units of time are in seconds.

For example, if the controller provides a 10 second reference ramp, the controller would also supply a Speed Rate Ref value of 1 pu / 10 sec = 0.1 sec-1 while the reference is accelerating. When the reference is constant, Speed Rate Ref should be zero.

For additional illustration of the control refer to PF755 Control Block Diagrams in the PowerFlex 750-Series Programming Manual, publication 750-PM001.

Load Observer

The PowerFlex 755 load observer feature compensates for and greatly reduces load disturbances and gives quicker system response. It minimizes the load torque requirements of the speed regulator. The load observer attempts to determine a load estimate value that matches the load torque present in the simplified load model. This is a simplified motor/load model.

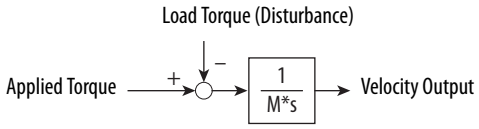

From a control point of view, load torque is an input that is just as real as velocity reference, but lacks a parameter. Load torque is unavoidable because it is effectively torque times speed that creates the power to run a load. Considering this load model, the applied torque is the electromagnetic torque generated by the motor control and load torque is clearly shown. M is the combined motor/load mass (inertia). The applied torque must be greater than the load torque to accelerate the system.

Load torque is not a parameter and thus is not directly accessible, but it can be indirectly measured. Referring to the plant model we can directly measure the applied torque, output velocity and the inertia is generally known or calculated. This leaves load torque as the only unknown value. If we place all three known quantities in a box that we call an observer, load torque can be estimated.

As the output of the load observer is added to the output of the speed regulator the function minimizes the load torque requirement for the output of the speed regulator. Because load observer affects the torque reference and the acceleration feedback is required, this method can only be applied on P35 [Motor Ctrl Mode] Flux Vector control modes with motor feedback device. This feature is available only on PowerFlex 755 drives.

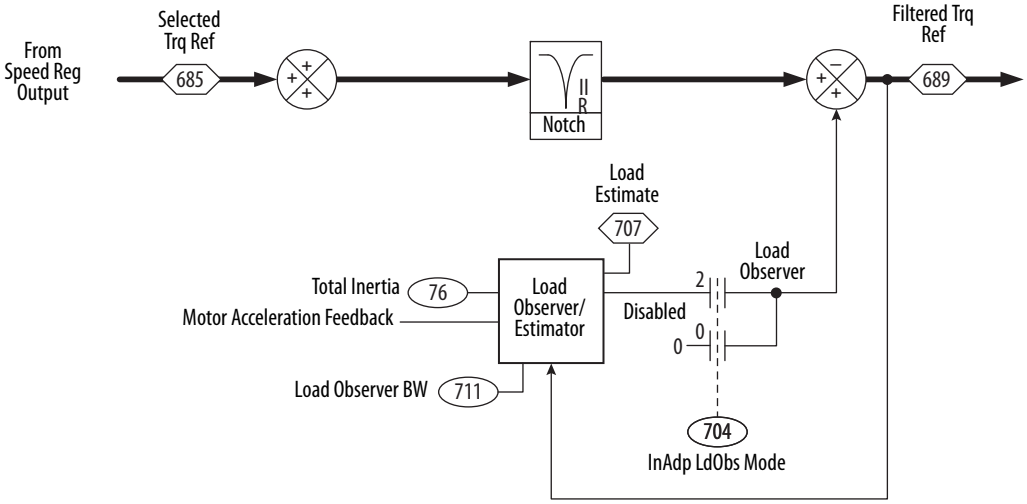

Configuration

Enable Load Observer by setting P704 [InAdp LdObs Mode] to 2 "LoadObserver." The total inertia value P76 [Total Inertia] is required for this feature. Ideally it is measured during the inertia test as part of the drive startup. The next best approach is to manually enter a reasonably close (calculated) value. In Load Observer mode, P711 [Load Observer BW] is used to set the natural frequency of a low pass filter in radians per second (R/S). Typical values for Load Observer Bandwidth range from 10 to 150 with the higher values being more responsive to disturbances but with increased system noise. There is no nominal best setting, but 40 R/S is a suggested starting point. This selection may not function well in sloppy geared systems. Unlike with Inertia Adaption, there is no automatic parameter setting associated with the Load Observer.

The Load Observer can also be used in conjunction with P695 [Inertia CompMode]. When used together, both the load torque and acceleration torque required from the speed regulator are minimized.

Where can Load Observer be used?

Load Observer can be used on systems where load disturbances are preventing a further increase in drive performance. The Load Observer can be applied to both periodic load disturbances, such as a piston pump, and random load disturbances. Load observer can be applied on systems that are not suitable for Inertia Adaption. Load Observer cannot be active at the same time as Inertia Adaption.

Motor Control Modes

P35 [Motor Ctrl Mode] selects the output mode of the drive to match the type of motor control to use. The Default selection is a value of 1 = "Induction SV." This parameter is set during any of the assisted start up routines either via the HIM or connected software tool wizard. The parameter settings follow.

- InductionVHz (0) – Induction motor, volts per Hertz control mode. Connected to an induction motor. Used for variable torque applications with improved efficiency energy savings and variable speed constant torque applications such as conveyors. Can also be used in multi-motor or synchronous motor applications.
- Induction SV (1) – Induction motor, sensorless vector control mode. Connected to an induction motor. Used for most constant torque applications. Provides excellent starting, acceleration, and running torque.
- Induct Econ (2) – Induction motor, economize control mode. Used for additional energy savings in constant torque applications that have constant speed reduced load periods.

- Induction FV (3) – Induction motor, flux vector control mode.
  Connected to an induction motor. Used when high performance precise speed regulation and/or position control closed loop is required. Can also be configured with direct Torque Reference input. Can also be used open loop with less precision.
- PM VHz (4) – Permanent magnet motor, volts per Hertz control mode.
  Connected to a Surface Permanent Magnet motor (SPM) or Permanent Magnet Synchronous Motor (PMSM). Used for variable torque applications with improved efficiency energy savings and variable speed constant torque applications such as conveyors. Also used in multi-motor or synchronous motor open loop applications.
- PM SV (5) – Permanent magnet motor, sensorless vector control mode.
  Connected to a Surface Permanent Magnet motor (SPM) or Permanent Magnet Synchronous Motor (PMSM). Used for constant torque applications. Provides excellent starting, acceleration, and running torque.
- PM FV (6) – Permanent magnet motor, flux vector control mode.
  Connected to a Surface Permanent Magnet motor. Used when high performance precise speed regulation and/or position control closed loop is required. Can also be configured with direct Torque Reference input. Can also be used open loop with less precision.
- SyncRel VHz (7) – Synchronous Reluctance motor, volts per Hertz control mode.
  Connected to a Synchronous Reluctance motor. Used for constant torque applications with improved efficiency energy savings and variable speed applications such as conveyors. Used in multi-motor applications.
- SyncRel SV (8) – Synchronous Reluctance motor, sensorless vector control mode.
  Connected to a Synchronous Reluctance motor. Used for constant torque applications with improved efficiency energy savings and variable speed applications such as conveyors. Avoid slow speed low inertia applications that cause torque ripple effects.
- Adj VltgMode (9) – Adjustable voltage control mode.
  Independent Frequency and Voltage regulators; Fixed Frequency and Variable Voltage or Fixed Voltage and Variable Frequency. Typically used for non-motor applications such as resistive and inductive heating elements, vibration welding, power supplies, Electromagnetic stirring of molten metal and some Linear Induction Motor LIM applications.
- IPM FV (10) – Interior permanent magnet motor, flux vector control mode.
  Connected to an Interior Permanent Magnet motor. Used when high performance precise speed regulation and/or position control with closed loop feedback is required. Can also be configured with direct Torque Reference input. Can also be used open loop with less precision.

Volts/Hertz

Volts/Hertz operation creates a fixed relationship between output voltage and output frequency. Volts/Hertz works the same for Permanent Magnet and SyncRel VHz as it does for induction VHz. The relationship can be defined in two ways by setting P65 [VHz Curve] to 0 "Custom V/Hz" or 1 "Fan/Pump."

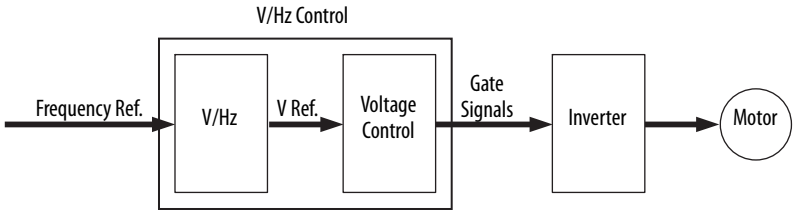

0 = "Custom V/Hz"

Custom Volts/Hertz enables a wide variety of patterns using linear segments. The default configuration is a straight line from zero to rated voltage and frequency. This is the same volts/hertz ratio that the motor sees if started across the line. As seen in the diagram below, the volts/hertz ratio can be changed to provide increased torque performance when required by programming five distinct points on the curve.

- P60 [Start Acc Boost] - Used to create additional torque for breakaway from zero speed and acceleration of heavy loads at lower speeds.
- P61 [Run Boost] - Used to create additional running torque at low speeds. The value is typically less than the required acceleration torque. The drive will lower the boost voltage to this level when running at low speeds (not accelerating). This reduces excess motor heating that could be caused if the higher start / accel boost level were used.
- P62 [Break Voltage] and P63 [Break Frequency] - Used to increase the slope of the lower portion of the Volts/Hertz curve, providing additional torque.
- P25 [Motor NP Volts] and P27 [Motor NP Hertz] - Set the upper portion of the curve to match the motor design. Marks the beginning of the constant power region.
- P36 [Maximum Voltage] and P37 [Maximum Frequency] - Slope the portion of the curve used above base speed.

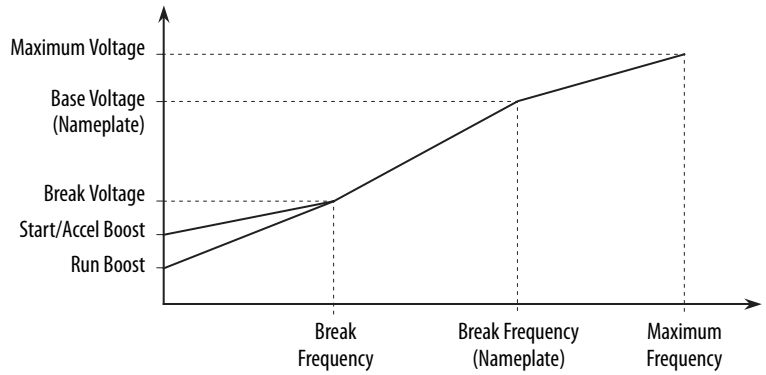

1 = "Fan/Pump"
When this option is chosen, the relationship is 1/x2. Therefore, at full frequency, full voltage is supplied. At 1/2 rated frequency, 1/4 voltage is applied. This pattern closely matches the torque requirement of a variable torque load (centrifugal fan or pump – load increases as speed increases) and offers the best energy savings for these applications.

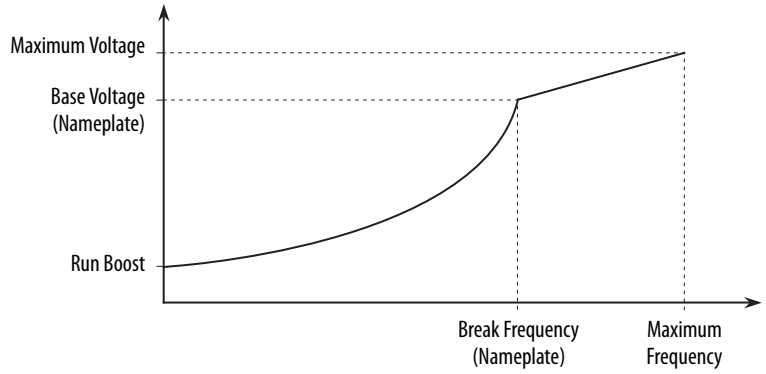

Sensorless Vector

Sensorless Vector mode uses a V/Hz core enhanced by excellent current resolution, a slip estimator, a high performance current limiter and the vector algorithms. The basic functions for SV are similar for all three motor types, induction motor, permanent magnet motor, and synchronous reluctance motor, however PM and SyncRel SV do not require Slip Frequency adjustments.

IM Sensorless Vector

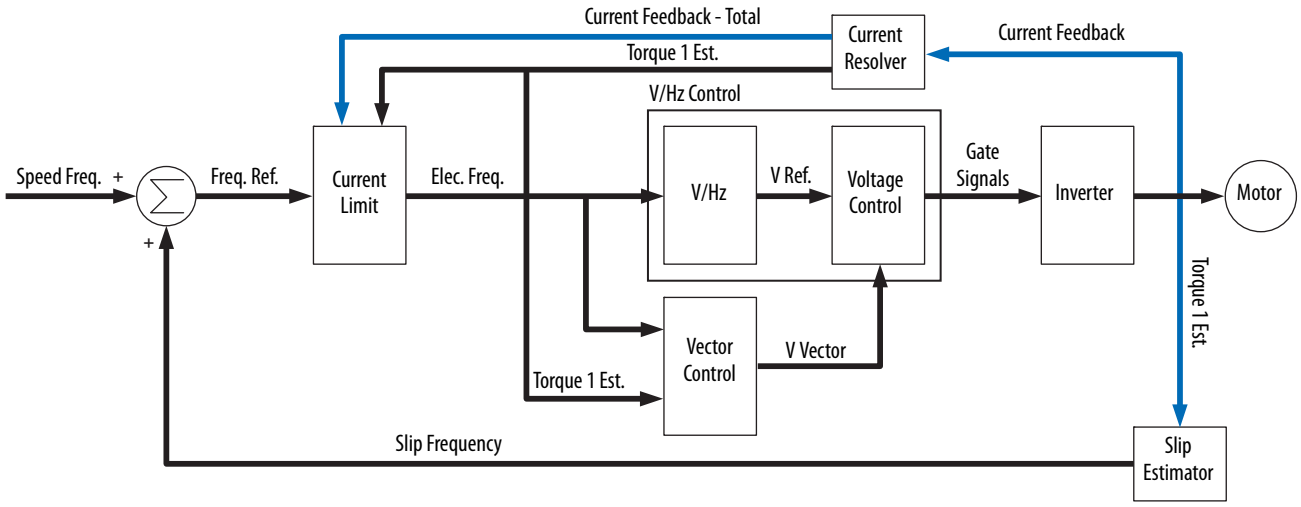

PM and SyncRel Sensorless Vector

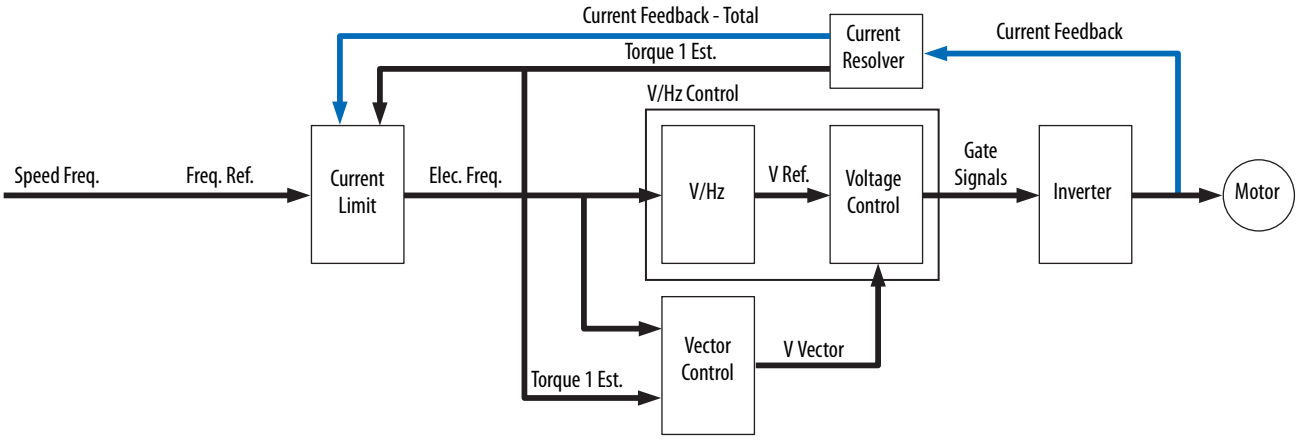

The algorithms operate on the knowledge that motor current is the vector sum of the torque and flux producing components of current. Values can be entered to identify the motor values or an autotune routine can be run to identify the motor values (see Autotune on page 35). Sensorless vector offers better torque production and a wider speed range than V/Hz. However, it is not appropriate to use when more than one motor is connected to the same drive.

In Sensorless Vector control, the drive commands a specific amount of voltage to develop flux.

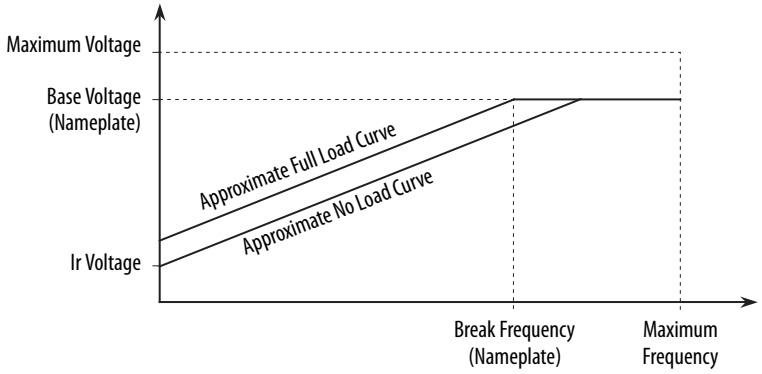

Sensorless Vector w/Economizer

Economizer mode consists of the Sensorless Vector control with an additional energy savings function. When steady state speed is achieved, the economizer becomes active and automatically adjusts the drive output voltage based on applied load. By matching output voltage to applied load, the motor efficiency is optimized. Reduced load commands a reduction in motor flux current. The flux current is reduced as long as the total drive output current does not exceed 75% of motor rated current as programmed in P26 [Motor NP Amps]. The flux current is not allowed to be less than 50% of the motor flux current as programmed in P75 [Flux Current Ref]. During acceleration and deceleration,

the economizer is inactive and Sensorless Vector motor control performs normally.

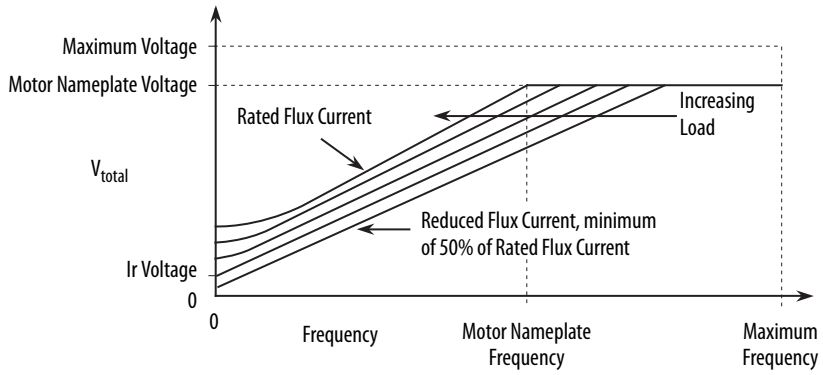

Flux Vector Control

In Flux Vector mode, the flux and torque producing currents are independently controlled and speed is indirectly controlled by a torque reference. Alternatively, the drive can control torque instead of speed in flux vector mode. In either case, this mode can be operated either with or without feedback and will provide the fastest response to load changes.

Flux Vector control is used with AC squirrel cage induction motors for high performance. Motor data and an autotune is required for correct operation in this mode (refer to Autotune on page 35 for details). In Flux Vector control, the drive takes the speed reference that is specified by the Speed Reference Selection block and compares it to the speed feedback. The speed regulator uses Proportional and Integral gains to adjust the torque reference for the motor. This torque reference attempts to operate the motor at the specified speed. The torque reference is then converted to the torque producing component of the motor current.

This type of speed regulator produces a high bandwidth response to speed command and load changes. Because Flux Vector controls the flux and torque producing currents independently, a torque reference can be sent directly instead of being generated from a speed reference via the Speed Regulator. The independent flux control also enables flux to be reduced in order to run above base motor speed.

Flux Vector

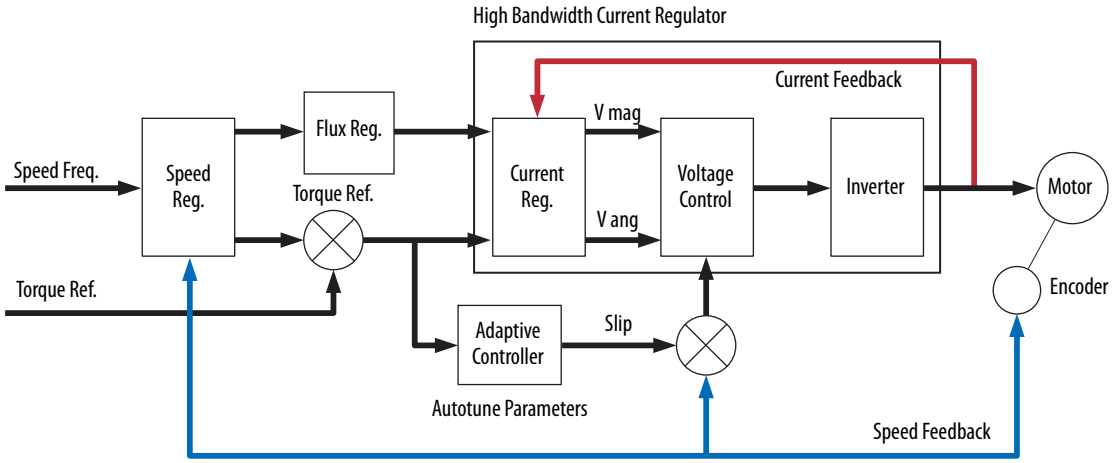

Permanent Magnet Motor Control

Permanent magnet motor control is selected by setting P35 [Motor Ctrl Mode] to the appropriate choices of motor type. Refer to Appendix D of the PowerFlex 750-Series Programming Manual, publication 750-PM001 for compatible list of Allen-Bradley Servo motors and resolution criteria.

Surface Permanent Magnet (SPM) motor or Permanent Magnet Synchronous Motor (PMSM) is a rotating electrical machine that has the stator phase windings and rotor permanent magnets. The air gap magnetic field is provided by these permanent magnets and hence it remains constant. The conventional DC motor commutates itself with the use of a mechanical commutator whereas SPM/PMSM needs electronic commutation for the direction control of current through the windings. Because the SPM/PMSM motors in effect have their armature coils at the stator, they need to be commutated externally with the help of an external switching circuit. A three phase PWM inverter topology is used for this purpose.

The torque is produced because the interaction of the magnetic fields causes the rotor to rotate. In permanent magnet motors, one of the magnetic fields is created by permanent magnets and the other is created by the stator coils. The maximum torque is produced when the magnetic vector of the rotor is at 90 degrees to the magnetic vector of the stator.

Motor data and an autotune are required for correct operation in this mode. Refer to Autotune on page 35 for details.

PM Sensorless Vector

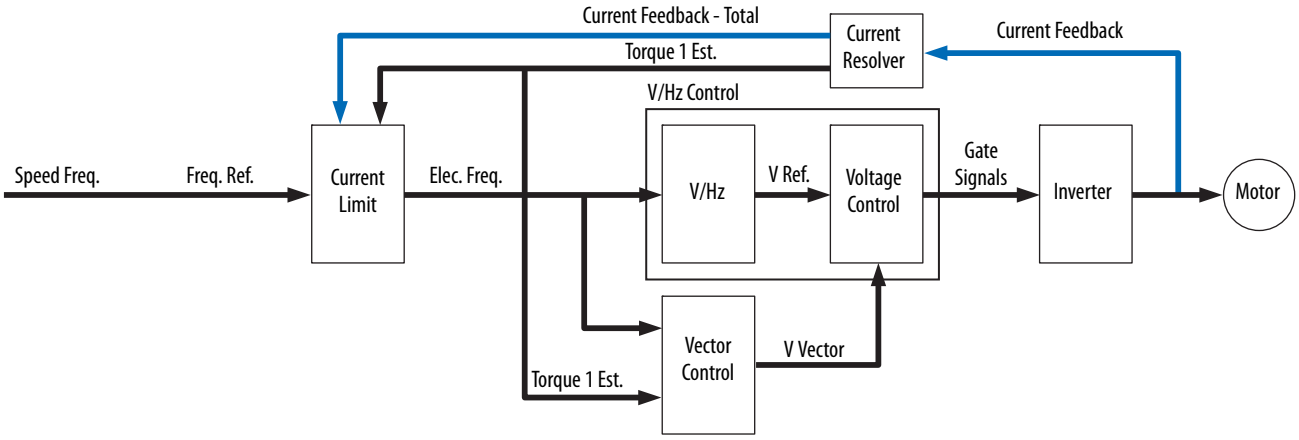

PM Flux Vector Control

In flux vector mode, the flux and torque producing currents are independently controlled and speed is indirectly controlled by a torque reference. Alternatively, the drive can also control torque instead of speed in flux vector mode. In either case, this mode can be operated either with or without feedback and will provide the fastest response to load changes.

High Performance and precise control will require encoder feedback. Refer to the PowerFlex 750-Series AC Drives Installation Instructions, publication 750-IN001, for a list of compatible High Resolution Stegmann encoder and Heidenhain encoder feedback on the motor.

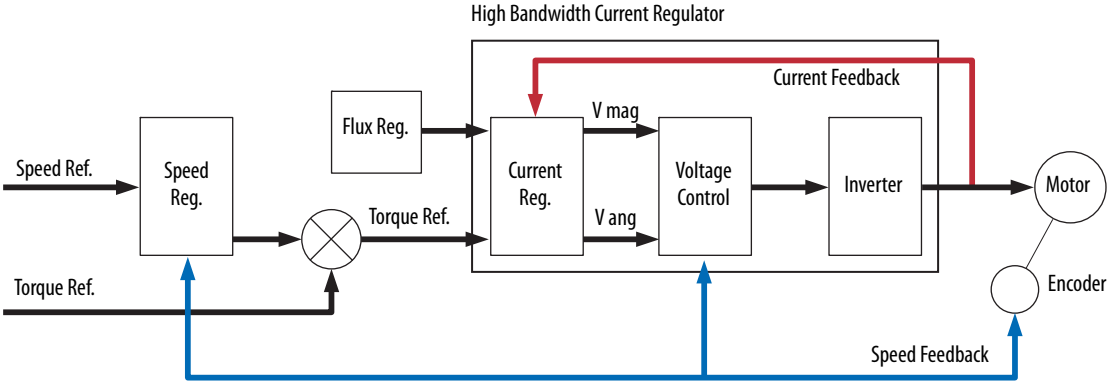

IPM Flux Vector Control

In IPM Flux Vector mode, the flux and torque producing currents continue to be independently controlled. Speed is indirectly controlled by a torque reference output command from the Speed Regulator. Alternatively, the drive can be configured to control torque instead of speed in flux vector mode. In either case, for precise control, this mode must be operated with encoder feedback in order to provide the fastest response to load changes.

The Iq/Id reference calculation block will produce optimum Iq/Id current reference that will try to establish maximum torque per amp control performance.

IPM Flux Vector

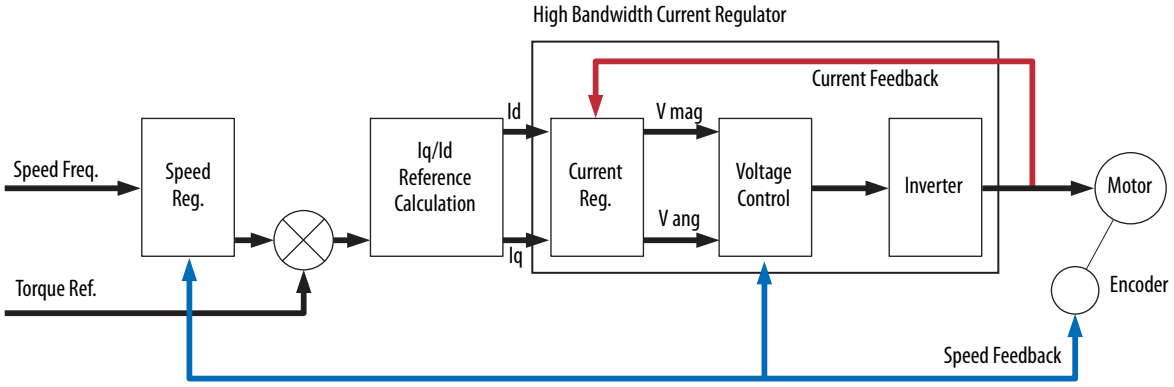

Motor Types

The following explanation and descriptions of AC motor types are condensed summaries derived from a variety of sources that focus on the history, evolution, and feature benefits of the variety of motor designs. These designs are utilized in all sectors of use and in vast variations of machinery, equipment, and processes.

The types of AC motors described here, powered by fixed utility frequency, are limited to speeds based on the number of poles and winding construction. Variable Frequency Drives (VFDs) broaden practical speed ranges of these motor types by converting utility power and applying appropriately selected VFD electronic control modes specifically matched to these unique motor type designs. Motor control modes set by P35 [Motor Ctrl Mode] are also discussed in Motor Control Modes on page 226 and the PowerFlex 750-Series Programming Manual, publication 750-PM001.

The following topics are briefly discussed in this section.

- Basics of AC Motor Design
- Induction AC Motors
- Wound-rotor AC Motors
- Multispeed AC Motors
- Synchronous AC Motors
- Permanent Magnet Motor Control
- Synchronous reluctance motors
- AC Linear Electric Motors (LIMs)

Basics of AC Motor Design

AC motors come in a variety of designs, each with functional purpose and benefits. Asynchronous and synchronous electric motors are the two main categories of AC motors.

The Induction AC motor is a common form of asynchronous motor and is basically an AC transformer with a rotating secondary. The primary winding (stator) is connected to the power source and the shorted secondary (the rotor) carries the induced secondary current. Torque is produced by the action of the rotor (secondary) currents on the air-gap flux. The synchronous motor differs greatly in design and operational characteristics, and is considered a separate class of AC motor.

AC Induction Motors

P35 [Motor Ctrl Mode] induction motor options.

- 0 = “Induction VHz”
- 1 = “Induction SV”
- 2 = “Induction Econ”
- 3 = “Induction FV”

AC Induction Motors (ACIMs) are the simplest and most rugged electric motor and consist of two basic electrical assemblies: the wound stator and the rotor assembly. The induction AC motor derives its name from currents flowing in the secondary member (rotor) that are induced by alternating currents flowing in the primary member (stator). The combined electromagnetic effects of the stator and rotor currents produce the force to create rotation.

ACIMs typically feature rotors, which consist of a laminated, cylindrical iron core with slots for receiving the conductors. The most common type of rotor has cast-aluminum conductors and short-circuiting end rings. This AC motor “squirrel-cage” rotates when the moving magnetic field induces a current in the shorted conductors. The speed at which the AC motor magnetic field rotates is the synchronous speed of the AC motor and is determined by the number of poles in the stator and the frequency of the power supply: ns = 120f/p, where ns = synchronous speed, f = frequency, and p = the number of poles (that is 120*60 Hz] / 4 = 1800 RPM). To control motor speed other than the fixed utility frequency requires a VFD.

Synchronous speed is the absolute upper limit of AC motor speed. If the AC motor’s rotor turns exactly as fast as the rotating magnetic field, then no lines of force are cut by the rotor conductors, and torque is zero. When AC induction motors are running, the rotor always rotates slower than the magnetic field. The AC motor’s rotor speed is just slow enough to cause the proper amount of rotor current to flow, so that the resulting torque is sufficient to overcome windage and friction losses, and drive the load. The speed difference between the AC motor’s rotor and magnetic field, called slip, is normally referred to as a percentage of synchronous speed: s = 100 (ns - na)/ns, where s = slip, ns = synchronous speed, and na = actual speed. Or it is listed on the nameplate as a base speed (1780 RPM) at rated FLA, frequency, and based on the number of poles.

Polyphase AC Induction Motors

Polyphase squirrel-cage AC motors are basically constant-speed machines, but some degree of flexibility in operating characteristics results from modifying the rotor slot design. These variations in AC motors produce changes in torque, current, and full-load speed. Evolution and standardization have resulted in four fundamental types of AC motors.

There are five basic NEMA designs for AC motors: A, B, C, D, and F. The speed-torque curves for all five designs are shown on the following graph.

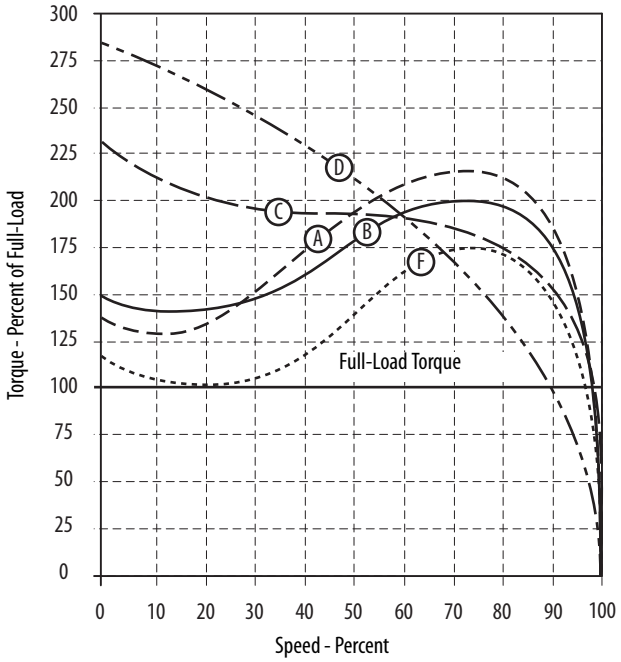

Speed - Torque Curves of NEMA A, B, C, D, and F Motors

AC Motors - Designs A and B are general-purpose AC motors with normal starting torques and currents and low slip. As shown, the characteristics of designs A and B are quite similar. The primary difference between these two designs is that the starting current for design B is limited by NEMA standards, but there is no limitation on the starting current for design A.

AC Motors - Design C have high starting torque with normal starting current and low slip. NEMA design C motor has a higher starting torque than either the A or B designs. This torque is in the vicinity of 225% of full-load torque. Design C AC motors are normally used where breakaway loads are high at starting, but which normally run at rated full load and are not subject to high overload demands after running speed has been reached.

AC Motors - Design D exhibit high slip AC motor starting torque, which is approximately 280% of full-load torque, low starting current, and low full-load speed. Because of the high slip, speed can drop when fluctuating loads are encountered. The high starting torque of the design D motor makes it

particularly suited to handle hard-to-start loads. Another useful characteristic of this motor is the sloping shape of its speed-torque curve. This lets the motor slow down during periods of peak loads, enabling any flywheel energy that has been stored by the load to be released. Typical applications include punch presses and press brakes.

AC Motors - Design F exhibit low starting torque, low starting current, and low slip. These AC motors are built to obtain low locked-rotor current. Both locked-rotor and breakdown torque are low. Normally these AC motors are used where starting torque is low and where high overloads are not imposed after running speed is reached.

In summary, we see that when matching an AC motor to the requirements of a specific load it is important to check the torque requirements of the load and the torque capabilities of the motor in addition to speed and horsepower.

At least three torque values are important:

- Starting torque
- Breakdown torque
- Full-load torque.

Wound-rotor AC Motors

P35 [Motor Ctrl Mode] induction motor options.

- 0 = “Induction VHz”
- 1 = “Induction SV”
- 3 = “Induction FV”

Squirrel-cage AC motors are relatively inflexible with regard to speed and torque characteristics, but a special wound-rotor AC motor has controllable speed and torque. Application of wound-rotor AC motors is markedly different from squirrel-cage AC motors because of the accessibility of the rotor circuit. AC motor performance characteristics are obtained by inserting different values of resistance in the rotor circuit.

Wound-rotor AC motors are generally started with secondary resistance in the rotor circuit. The AC motor resistance is sequentially reduced to permit the motor to come up to speed. Thus, AC motors can develop substantial torque while limiting locked-rotor current. This secondary AC motor resistance can be designed for continuous service to dissipate heat produced by continuous operation at reduced speed, frequent acceleration, or acceleration with a large inertia load. External resistance gives AC motors a characteristic that results in a large drop in rpm for a fairly small change in load. Reduced AC motor speed is provided down to about 50% rated speed, but efficiency is low.

Retrofitting a Wound-rotor motor with a VFD is possible by eliminating the switching and resistor control infrastructure and shorting the slip rings

connected to the rotor windings. CAUTION! Because wound-rotor motors were not originally designed for use with inverters, the dielectric strength of the motor construction cannot withstand the reflected wave voltages that can get subjected at the motor connections (1.5 to 2.5 times drive's bus voltage). Appropriate mitigation must be considered. General rule of thumb, size the VFD so that it is capable of providing continuous current at 125 to 135% of FLA of the motor, due to elimination of resistors and its design for higher starting torque.

Multispeed AC Motors

P35 [Motor Ctrl Mode] induction motor options.

- 0 = "Induction VHz"
- 1 = "Induction SV"
- 3 = "Induction FV"

Consequent-pole AC motors are designed for one speed. By physically reconnecting the leads, a 2:1 speed ratio can be obtained. Typical synchronous speeds for 60 Hz AC motors are: 3,600/1,800 rpm (2/4 pole), 1,800/900 rpm (4/8 pole), and 1,200/600 rpm (6/12 pole).

Two-winding AC motors have two separate windings that can be wound for any number of poles so that other speed ratios can be obtained. However, ratios greater than 4:1 are impractical because of AC motor size and weight.

Power output of multispeed AC motors can be proportioned to each different speed. These AC motors are designed with output horsepower capacity in accordance with one of the load characteristics.

When retrofitted with a VFD, the motor is generally wired for the speed range intended to be optimized. Autotuned per representative nameplate information and operated as a single winding single speed induction motor.

Synchronous AC Motors

P35 [Motor Ctrl Mode] induction motor options.

- 0 = "Induction VHz"

Synchronous AC motors are inherently constant-speed electric motors and they operate in absolute synchronism with line frequency. As with squirrel-cage induction AC motors, speed is determined by the number of pairs of poles and is always a ratio of the line frequency.

Synchronous AC motors are made in sizes ranging from sub-fractional self-excited units to large-horsepower, direct-current-excited AC motors. In the fractional-horsepower range, synchronous AC motors are used primarily where precise constant speed is required.

In large horsepower sizes applied to industrial loads, synchronous AC motors serve two important functions. First, AC motors provide highly efficient means of converting AC energy to mechanical power. Second, AC motors can operate at leading or unity power factor, thereby providing power-factor correction.

There are two major types of synchronous AC motors: non-excited and direct-current excited electric motors. Application of a VFD is to vary the desired synchronous speed of the machine.

Permanent Magnet Motor Control

Permanent magnet motor control is selected by setting P35 [Motor Ctrl Mode] to the appropriate choices of motor type. Refer to the PowerFlex 750-Series Programming Manual, publication 750-PM001, Appendix D for compatible List of Allen-Bradley Servo motors and resolution criteria.

Surface Permanent Magnet Motor (SPM) or Permanent Magnet Synchronous Motor (PMSM)

P35 [Motor Ctrl Mode] induction motor options.

- 4 = “PM VHz”
- 5 = “PM SV”
- 6 = “PM FV”

SPM or PMSM is a rotating electrical machine that has the stator phase windings and rotor permanent magnets. The air gap magnetic field is provided by these permanent magnets therefore it remains constant.

The conventional DC motor commutates itself with the use of a mechanical commutator whereas SPM / PMSM needs electronic commutation for the direction control of current through the windings. Because the SPM/PMSM motors in effect have their armature coils at the stator, they need to be commutated externally with the help of an external switching circuit. A three phase PWM inverter (VFD) topology is used for this purpose.

The torque is produced because the interaction of the magnetic fields causes the rotor to rotate. In permanent magnet motors, one of the magnetic fields is created by permanent magnets and the other is created by the stator coils. The maximum torque is produced when the magnetic vector of the rotor is at 90 degrees to the magnetic vector of the stator.

Motor data and an autotune are required for correct operation in this mode. Refer to Autotune on page 35 for details on the autotune.

The permanent magnet synchronous motor (PMSM) can be thought of as a cross between an AC induction motor and a brushless DC motor (BLDC). They have

rotor structures similar to BLDC motors which contain permanent magnets. However, their stator structure resembles that of its ACIM cousin, where the windings are constructed in such a way as to produce a sinusoidal flux density in the air gap of the machine. As a result, they perform best when driven by sinusoidal waveforms. However, unlike their ACIM relatives, PMSM motors perform poorly with open-loop scalar V/Hz control, because there is no rotor coil to provide mechanical damping in transient conditions.

Field Oriented Control is the most popular control technique used with PMSMs. As a result, torque ripple can be extremely low, on par with that of ACIMs. PMSM motors provide higher power density for their size compared to ACIMs. This is because with an induction machine, part of the stator current is required to "induce" rotor current in order to produce rotor flux. These additional currents generate heat within the motor. In a PMSM, the rotor flux is already established by the permanent magnets on the rotor.

Most PMSMs utilize permanent magnets which are mounted on the surface of the rotor. This makes the motor appear magnetically "round," and the motor torque is the result of the reactive force between the magnets on the rotor and the electromagnets of the stator. This results in the optimum torque angle being 90 degrees, which is obtained by regulating the d-axis current to zero in a typical FOC application.

Interior Permanent Magnet Motor

P35 [Motor Ctrl Mode] induction motor options.

- 10 = "IPMn VHz"

Some PMSMs have magnets that are buried inside of the rotor structure. These motors are called Interior Permanent Magnet, or IPM motors. As a result, the radial flux is more concentrated at certain spatial angles than it is at others. This gives rise to an additional torque component called reluctance torque, which is caused by the change of motor inductance along the concentrated and non-concentrated flux paths.

This causes the optimum Field Oriented Control torque angle to be greater than 90 degrees, which requires regulating the d-axis current to be a fixed negative ratio of the q-axis current. This negative d-axis current also results in field weakening, which reduces the flux density along the d-axis, which in turn partially lowers the core losses. As a result, IPM motors boast even higher power output for a given frame size.

Motor data and an autotune are required for correct operation in this mode. Refer to Autotune on page 35 for details on the autotune.

These motors are becoming increasingly popular as traction motors in hybrid vehicles, as well as variable speed applications for appliances and HVAC. In the servo motor world more and more designs are shifting away from SPM to IPM to

take advantage of inherent advantages. In principle, there are no size limitations to IPM designs and these can be developed from small fractional horsepower to large – hundreds of Hp ratings, creating potential applications that can benefit from variable speed IPM control.

Synchronous Reluctance Motors

P35 [Motor Ctrl Mode] induction motor options.

- 7 = "SyncRel VHz"
- 8 = "SyncRel SV"

Synchronous reluctance motors have an equal number of stator and rotor poles. The projections on the rotor are arranged to introduce internal flux "barriers," holes which direct the magnetic flux along the so-called direct axis. Typical numbers of poles are 4 and 6. Following example of a 4 pole rotor and 6 pole stator.

As the rotor is operating at synchronous speed and there are no current-conducting parts in the rotor, rotor losses are minimal compared to those of an induction motor, thus potential energy savings in appropriate applications. Once started and rotating at synchronous speed, the motor can operate with sinusoidal voltage. So to start and control speed at frequencies other than utility requires a variable-frequency drive.

AC Linear Electric Motors LIMs and LSMs

P35 [Motor Ctrl Mode] induction motor options.

- 0 = "Induction VHz"
- 9 = "Adjustable Voltage"

The first linear electric motor was conceived by Wheatstone more than 100 years ago. But large air gaps and low efficiencies prevented linear electric motors from being widely used until recent advances in design and VFD controls.

Linear Induction Motors (LIMs)

In a LIM, the motor stator creates an Alternating Current (AC) field that induces currents into the reaction plate (moving element), which is typically an aluminum fin or plate. This creates eddy currents in the moving element which react with the moving field in the stator to produce thrust. LIMs typically are kept moving, avoiding holding stationary (equivalent to locked rotor) because of significant heating of the reactor plate.

A linear electric motor in concept has rotary electric motor stator cores, unrolled out over a linear path. The circular stator becomes a linear stator, being defined as a single-sided linear induction electric motor (SLIM). Likewise, if the circular stator is cut into two sections and flattened, the electric motor becomes a double-sided linear induction electric motor (DLIM). The DLIM and SLIM both require a two or three-phase stator (primary) winding and a flat metallic or conductive plate-type armature (secondary) instead of a rotor.

The moving member in a linear induction motor is typically a solid conducting plate or sheet. It does not contain coils or windings. However, a linear electric motor can also be constructed so the primary moves and the secondary remains stationary.

Linear induction motors LIMs are increasingly chosen for material-handling applications and Amusement rides because they are quieter, more reliable, and less expensive than rotary electric motors. And because linear electric motors do not drive gearboxes or rotary-to-linear conversion devices, they can be more efficient.

There are several important differences between linear and rotary electric induction motors that require understanding. Unlike rotary electric motors, the linear motor has a beginning and an end to its travel. First, the moving secondary material enters the primary (stator field) at one end of the electric motor and exits at the opposite end. Induced currents in the secondary material at the entry edge resist air-gap flux buildup. And at the exit edge, the material retards the air-gap flux decay. This results in an uneven air-gap flux distribution which contribute to challenges in sizing VFDs and optimizing set up of control frequency and voltage. VFD control uses either fixed V/Hz, or independently controlled frequency and voltage.

Linear Synchronous Motors (LSMs)

Linear Synchronous Motors (LSMs) are significantly different than Linear Induction Motors (LIMs) in the way that they produce electromotive forces or motion.

Linear Synchronous Motors (LSMs) are similar in concept with stator cores, arranged along a path for motion, rather than contained in a frame for rotary motion. But the field in a LSM moving secondary element is usually provided by permanent magnets. There are no significant currents induced. Magnets are embedded in the moving element. This does allow for more definitive position control and holding position without excessive heat generation. Generally some sort of position sensor and feedback are necessary to implement control of LSMs via VFD are necessary.

At the time of this writing there has been minimal experience applying VFDs to control Linear Synchronous Motors (LSMs). Only this short description of its construction is included.

Notch Filter

A notch filter exists in the torque reference loop to reduce mechanical resonance created by a gear train. P687 [Notch Fltr Freq] sets the center frequency for the 2 pole notch filter, and P688 [Notch Fltr Atten] sets the attenuation of the notch filter in the vector control torque reference section. Attenuation is the ratio of the notch filter input signal to its output at the P687 [Notch Fltr Freq]. An attenuation of 30 means that the notch output is 1/30th of the input at the specified frequency.

The notch filter is valid only in Flux Vector Motor Control modes (P35).

Figure 25 - Notch Filter Frequency

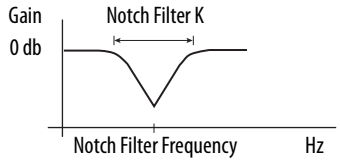

Example

A mechanical gear train consists of two masses (the motor and the load) and spring (mechanical coupling between the two loads).

Mechanical Gear Train

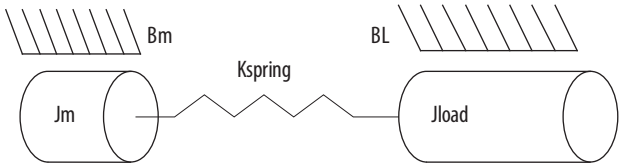

The resonant frequency is defined by the following equation:

$$ResonanceHz = \sqrt{Kspring \times \frac{(Jm + Jload)}{(Jm \times Jload)}}$$

- Jm is the motor inertia (seconds)
- Jload is the load inertia (seconds)
- Kspring is the coupling spring constant (rad2 / sec)

The following graph shows a two mass system with a resonant frequency of 62 radians/second (9.87 Hz). One Hertz is equal to 2p radians/second.

Figure 26 - Resonance

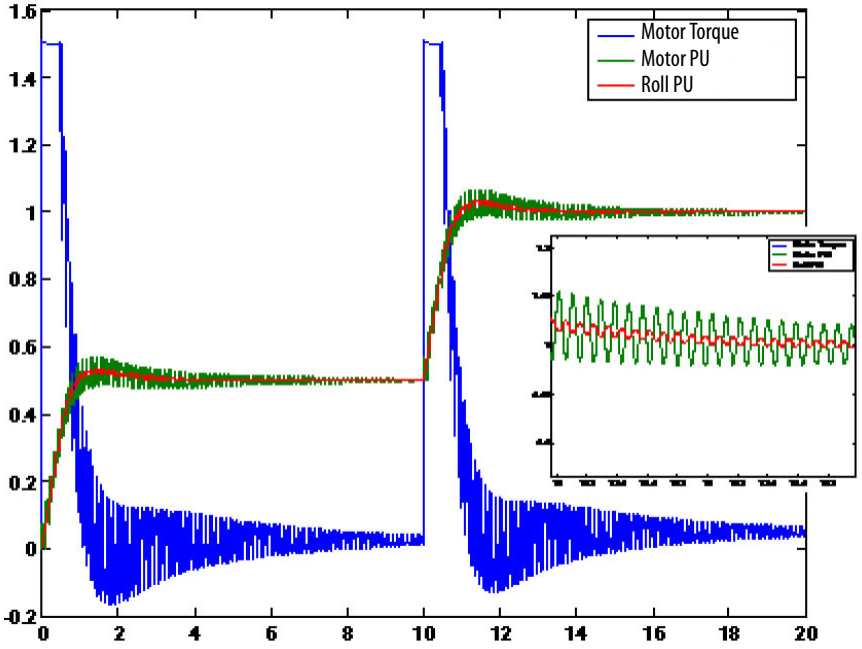

The following represents the same mechanical gear train but with [Notch Filter Freq] set to 10.

Figure 27 - 10 Hz Notch

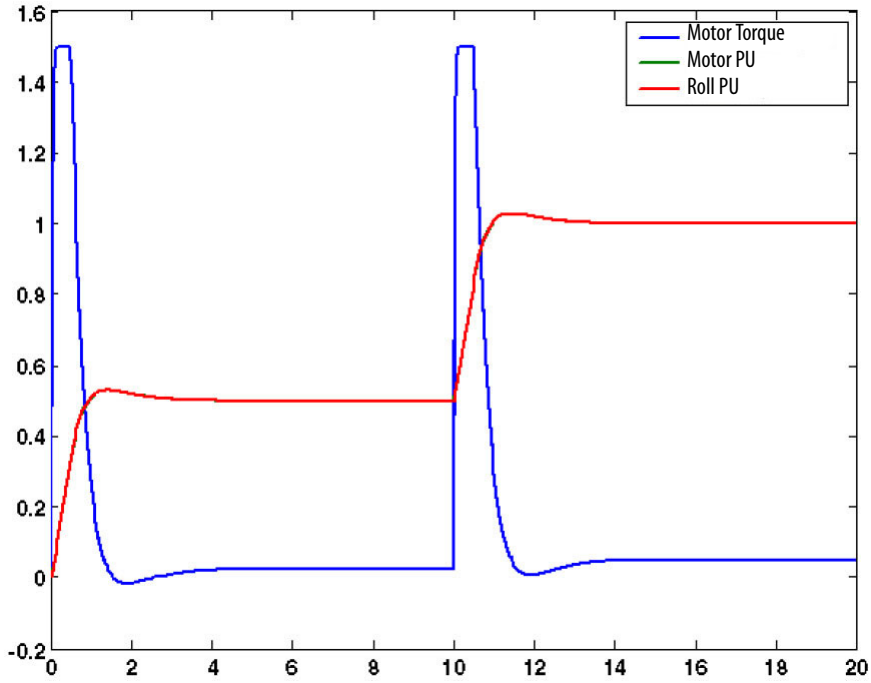

To see the effects of the notch filter use test points T65 and T73 in torque control. T65 is before the filter and T73 after. And test point Txx (before) and Txx (after) in position control. See the partial block diagram below.

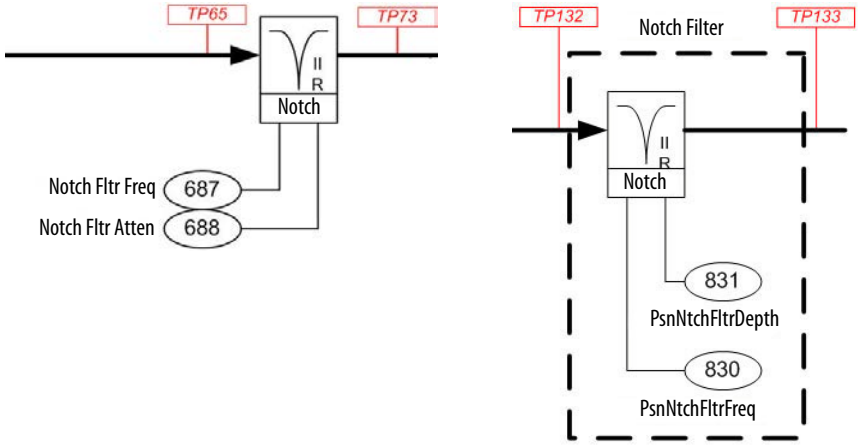

Regen Power Limit

The P426 [Regen Power Lmt] is programmed as a percentage of the rated power. The mechanical energy that is transformed into electrical power during a deceleration or overhauling load condition is clamped at this level. Without the proper limit, a bus overvoltage can occur. When using the bus regulator [Regen Power Lmt] can be left at factory default, -50%.

When using dynamic braking or a regenerative supply, [Regen Power Lmt] can be set to the most negative limit possible (–800%). When you have dynamic braking or regenerative supply, but want to limit the power to the dynamic brake or regenerative supply, [Regen Power Lmt] you can set a specific level. Values in this parameter are valid only in a Flux Vector mode.

The following series of plots describes the difference between changing Regen Power Limit versus changing the Negative Torque Limit. The beginning part of every plot is identical, this is the acceleration of the motor. Once the stop is commanded and deceleration begins, note the red trace in each. This represents torque current. Because power is proportional to speed, as the speed decreases, the torque current increases allowing more power to be dissipated.

Note the speed feedback in the RPL = -20%, the slower the motor gets the faster it's brought to zero speed and the torque current increases. The higher the value in Regen Power Limit the more power is allow to pass through.

Focus on the torque current (red) trace as you scroll through the plots and note the change in the shape as the regen power limit was increase. Then see how it is clamped at a particular level when Negative Torque Limit is changed.

RPL = -20%

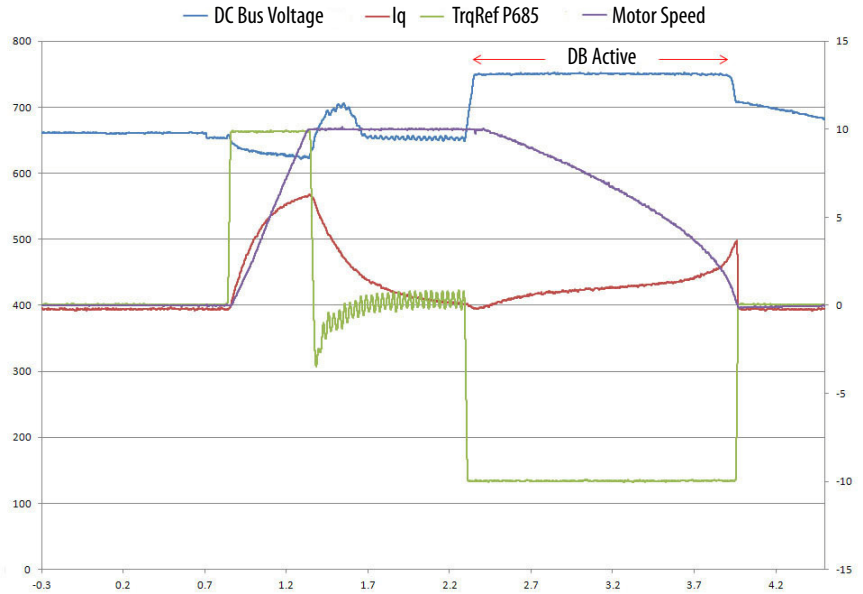

RPL = -50%

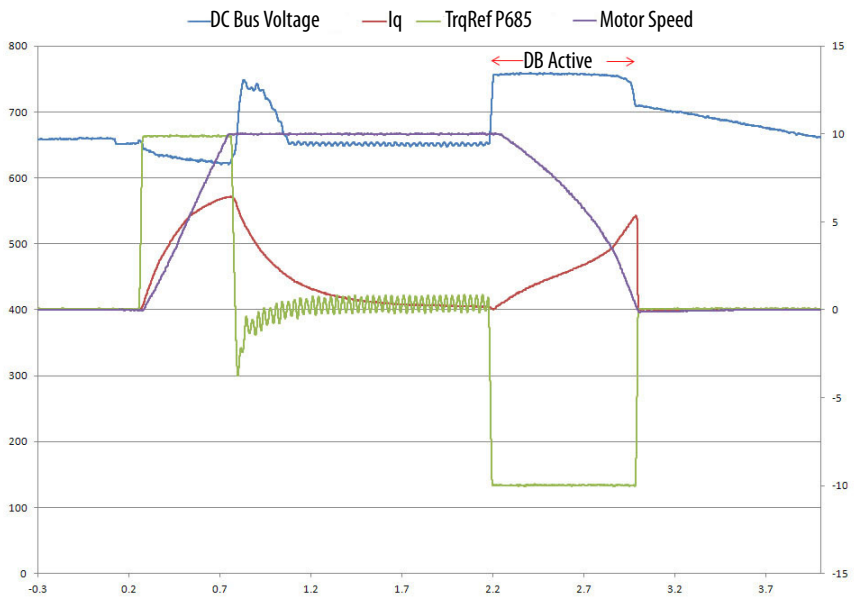

RPL = 100%

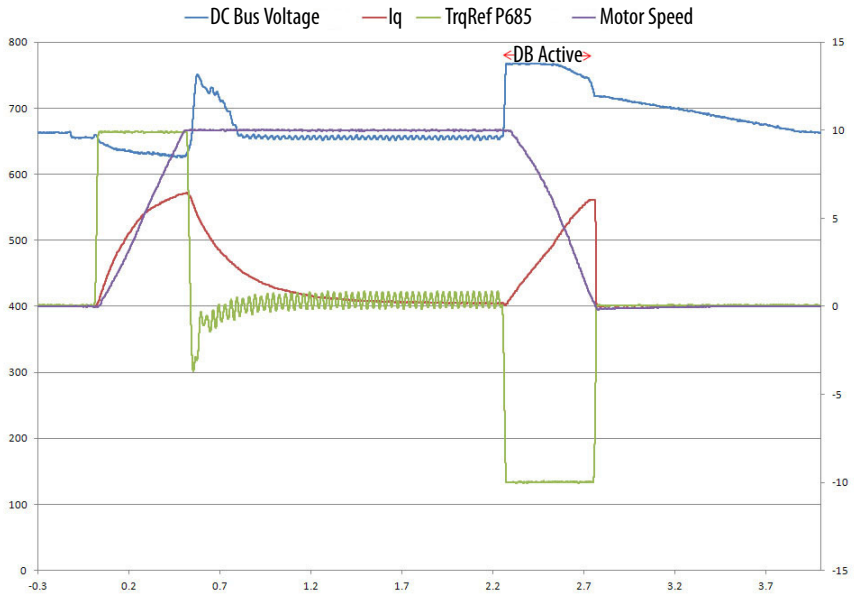

RPL = -200%

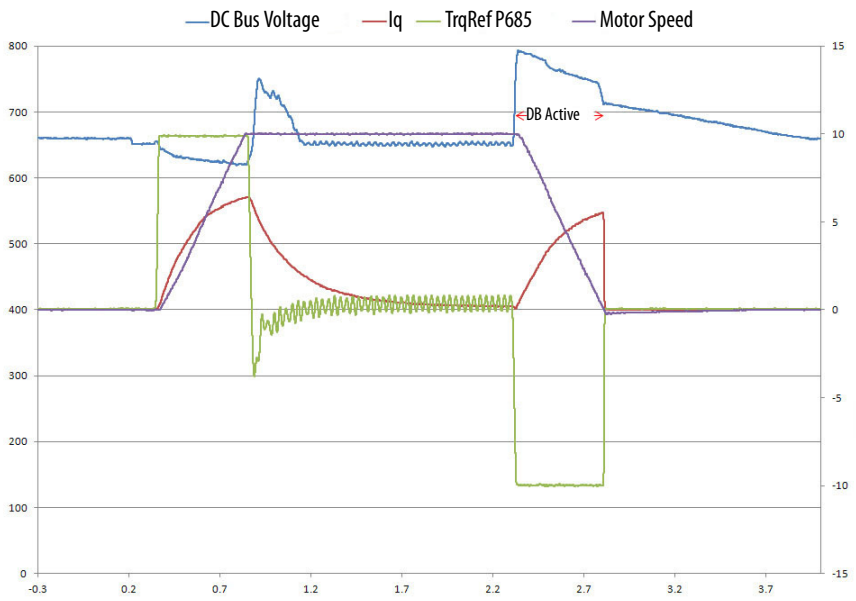

NTL = -20%

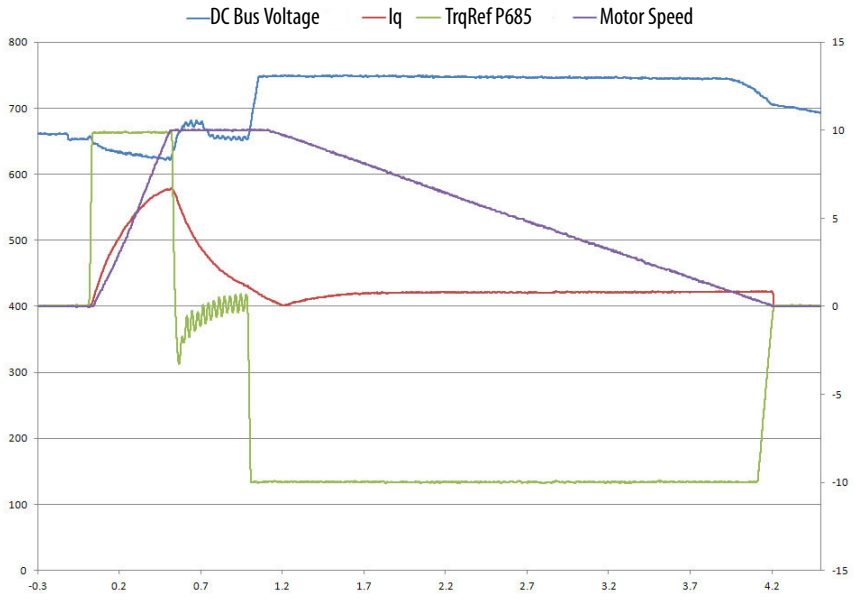

NTL = -50%

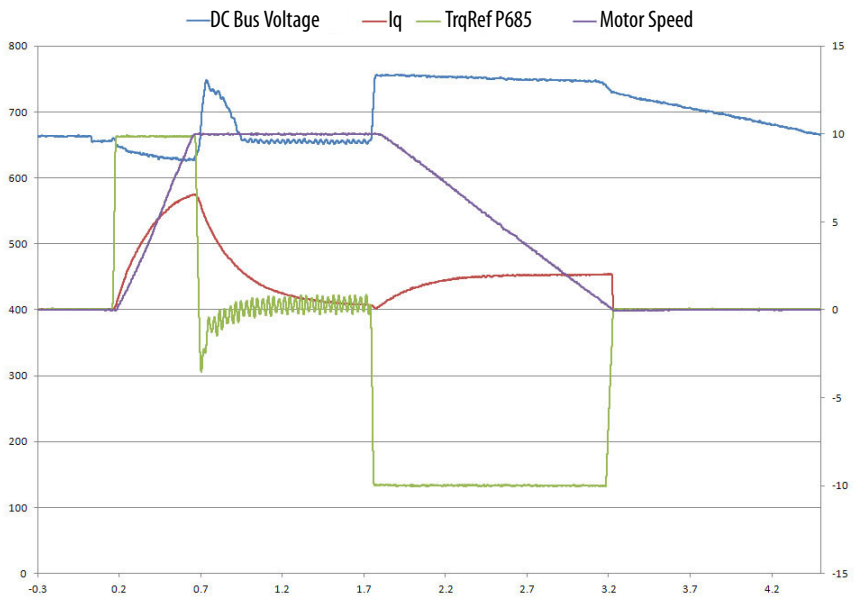

NTL = -100%

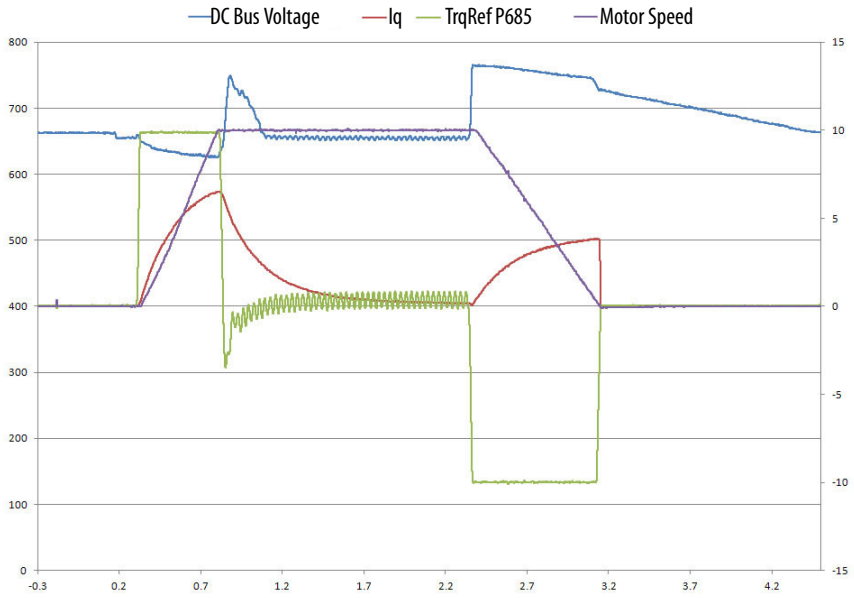

Speed Reference

The speed reference can come from a variety of sources. Some can be selected through digital inputs or via bit manipulation of the Network Logic Command Word:

- HIM (local or remote)
- Analog Input
- Preset Speed Parameters
- Jog Speed Parameters
- Auxiliary Velocity Feedback
- Network Communication
- Process PID Loop
- MOP Reference
- DeviceLogix software

Figure 28 - PowerFlex 753 Speed Reference Selection Overview

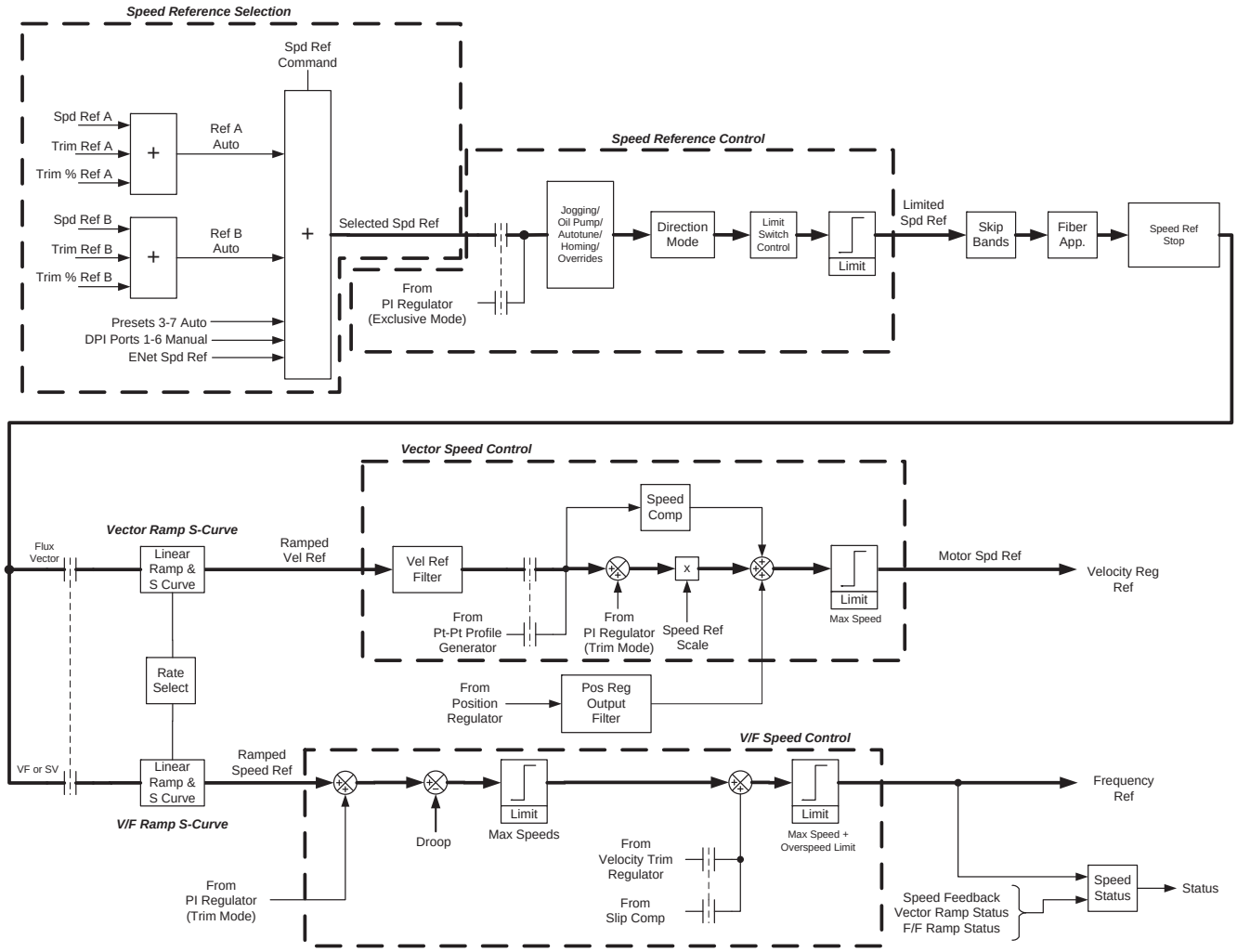

Refer to the PowerFlex 750-Series Programming Manual, publication 750-PM001, Appendix A for more details on the PowerFlex 753 Control Block Diagrams.

Figure 29 - PowerFlex 755 Speed Reference Selection Overview

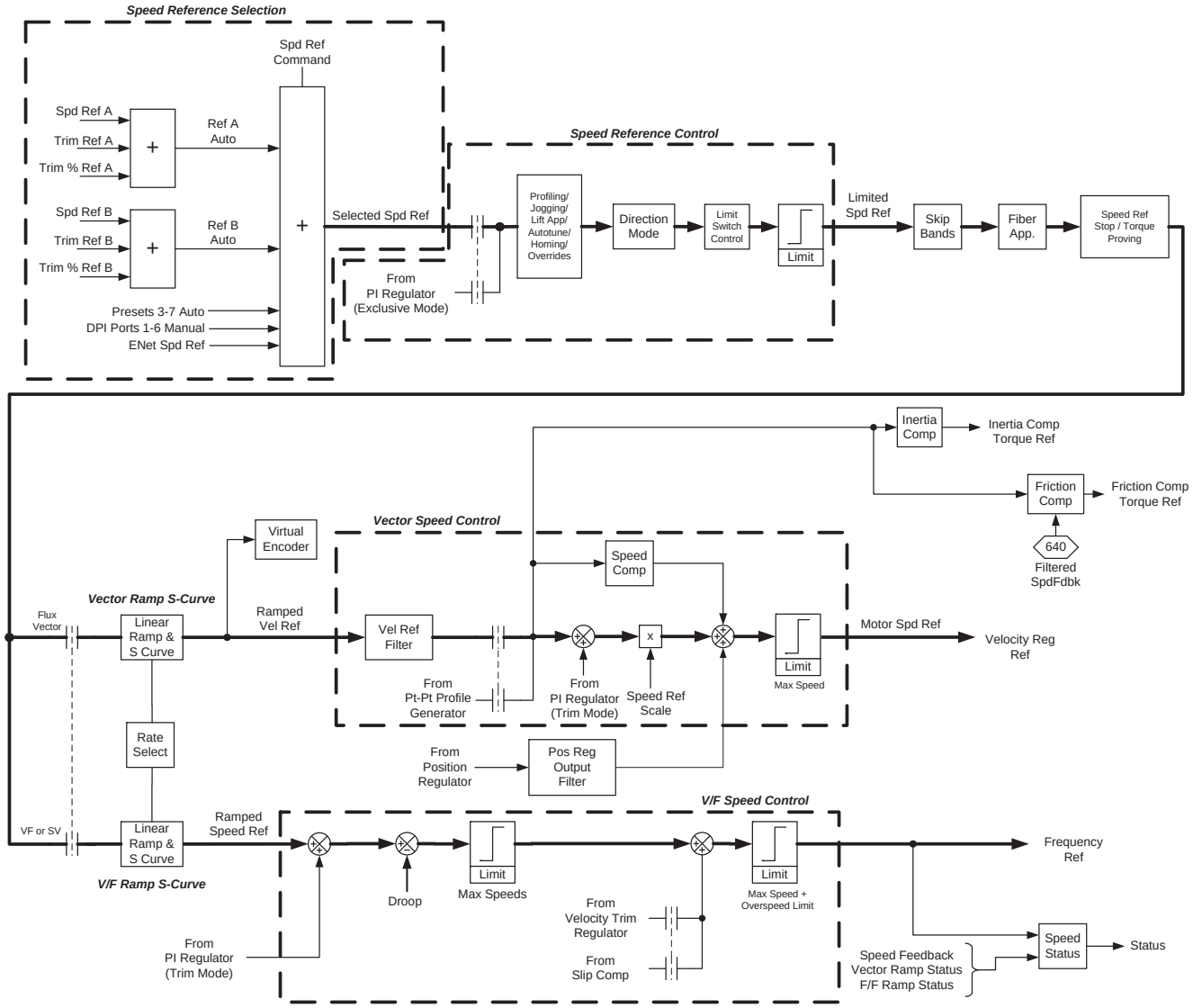

Refer to the PowerFlex 750-Series Programming Manual, publication 750-PM001, Appendix A, for more details on the PowerFlex 755 Control Block Diagrams.

Network Reference

Speed Reference A is the normal speed reference used. To choose a source for this reference, make a selection in P545 [Spd Ref A Sel]. Also, when the network (Logic Command Word) is used as the speed reference, refer to the following documentation for details of operation:

- PowerFlex 750-Series AC Drives Programming Manual, 750-PM001
- PowerFlex 755 Drive Embedded EtherNet/IP Adapter User Manual, 750COM-UM001
- PowerFlex 20-750-ENETR Dual-port EtherNet/IP Option Module User Manual, 750COM-UM008
- EtherNet/IP Network Configuration User Manual, ENET-UM001

The Reference is a 32-bit REAL (floating point) piece of control data produced by the controller and consumed by the adapter. The Feedback is a 32-bit REAL (floating point) piece of status data produced by the adapter and consumed by the controller.

When using a ControlLogix controller, the 32-bit REAL Reference is always DINT 1 in the output image and the 32-bit REAL Feedback is always:

- DINT 1 in the input image when using the drive Add-On Profile.
- DINT 2 when using the Generic Profile.

For a PLC-5®, SLC™ 500 or MicroLogix™ 1100/1400 controller, the 32-bit REAL Reference word is always words 2 (Least Significant Word) and 3 (Most Significant Word) in the output image and the 32-bit REAL Feedback is always words 2 (Least Significant Word) and 3 (Most Significant Word) in the input image.

When using a drive Add-On Profile, the Reference and Feedback are automatically formatted properly and displayed as a controller tag. When using the Generic Profile, the I/O image is integer-based and the Reference and Feedback are floating point. Because of this, a COP (Copy) instruction or User Defined Data Type (UDDT) is required to correctly write values to the Reference and read values from the Feedback. Refer to the PowerFlex 755 Embedded EtherNet/IP Adapter User Manual or to the PowerFlex 20-750-ENETR Dual-port EtherNet/IP Option Module User Manual for ladder logic program examples.

When using the drive Add-On Profile, the controller tags for Reference and Feedback are automatically and properly formatted. This eliminates the need for data conversion using COP (copy) instructions or a UDDT to copy the DINT data into a REAL word.

The Reference and Feedback 32-bit REAL value represents drive speed. The scaling for the speed Reference and Feedback is dependent on drive P300 [Speed Units]. For example, if P300 is set to Hz, a 32-bit REAL Reference value of 30.0 equals a Reference of 30.0 Hz. If P300 is set to RPM, a 32-bit REAL Reference value of 1020.5 equals a Reference of 1020.5 RPM. Note that the commanded maximum speed can never exceed the value of drive P520 [Max Fwd Speed]. Table 12 shows example References and their results for a PowerFlex 755 drive that has its:

- P300 [Speed Units] set to Hz.
- P37 [Maximum Freq] set to 130 Hz.
- P520 [Max Fwd Speed] set to 60 Hz.

When P300 [Speed Units] is set to RPM, the other parameters are also in RPM.

Table 12 - PowerFlex 755 Drive Example Speed Reference/Feedback Scaling

Network Reference Value	Speed Command Value(2)	Output Speed	Network Feedback Value
130.0	130 Hz	60 Hz(3)	60.0
65.0	65 Hz	60 Hz(3)	60.0
32.5	32.5 Hz	32.5 Hz	32.5
0.0	0 Hz	0 Hz	0.0
-32.5(1)	32.5 Hz	32.5 Hz	32.5

(1) The effects of values less than 0.0 depend on whether the PowerFlex 755 drive uses a Bipolar or Unipolar Direction mode. See the drive documentation for details.
(2) For this example, drive P300 [Speed Units] is set to Hz.
(3) The drive runs at 60 Hz instead of 130 Hz or 65 Hz because drive P520 [Max Fwd Speed] sets 60 Hz as the maximum speed

When a network (communication adapter) is selected as the speed reference, a 32-bit word is used as the speed reference. If P308 [Direction Mode], is set to 1 "Bipolar," the most significant bit (MSB) is used for direction control. Otherwise, the MSB is ignored.

IMPORTANT When a 20-COMM Carrier (20-750-20COMM) is used to install a 20-COMM adapter on a PowerFlex 750-Series drive, the upper word (Bits 16…31) of the Logic Command Word and Logic Status Word are not accessible. The upper word is only used and accessible on PowerFlex 750-Series communication modules (20-750-*) and the embedded EtherNet/IP on PowerFlex 755 drives.

Jog

When the drive is not running, pressing the HIM's Jog soft button or a programmed Jog digital input function or by Logic Command (sent over a communication network) causes the drive to jog at a separately programmed jog reference. This jog speed reference value is entered in P556 [Jog Speed 1] or P557 [Jog Speed 2].

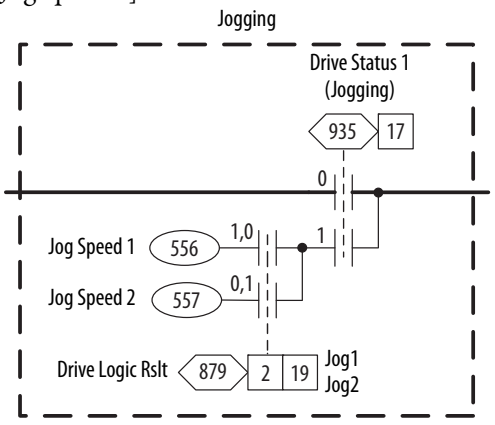

Scaling of an Analog Speed Reference

Refer to Analog Inputs on page 105.

Polarity

The polarity configuration can be selected as unipolar, bipolar, or reverse disabled via P308 [Direction Mode]. When in Unipolar mode, the sign of the speed reference value (and therefore direction of motor rotation) is determined by P879 [Drive Logic Rslt] Bit 4 "Forward" and Bit 5 "Reverse." When in Bipolar mode, the sign of the speed reference value determines the direction of motor rotation. When in Reverse Disable mode, negative speed reference values are rejected and a zero speed value is used in their place.

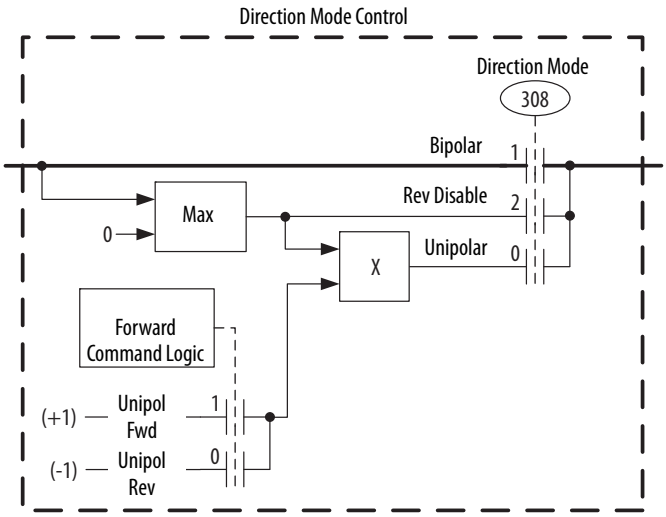

Trim

The speed reference source, specified in P545 [Spd Ref A Sel] or P550 [Spd Ref B Sel], can be trimmed by variable amount. You have the option to trim the speed reference by a percentage of the reference and/or by a fixed amount and can dictate whether it is a positive or negative value. Refer to the PowerFlex 750-Series Trim Block Diagram below.

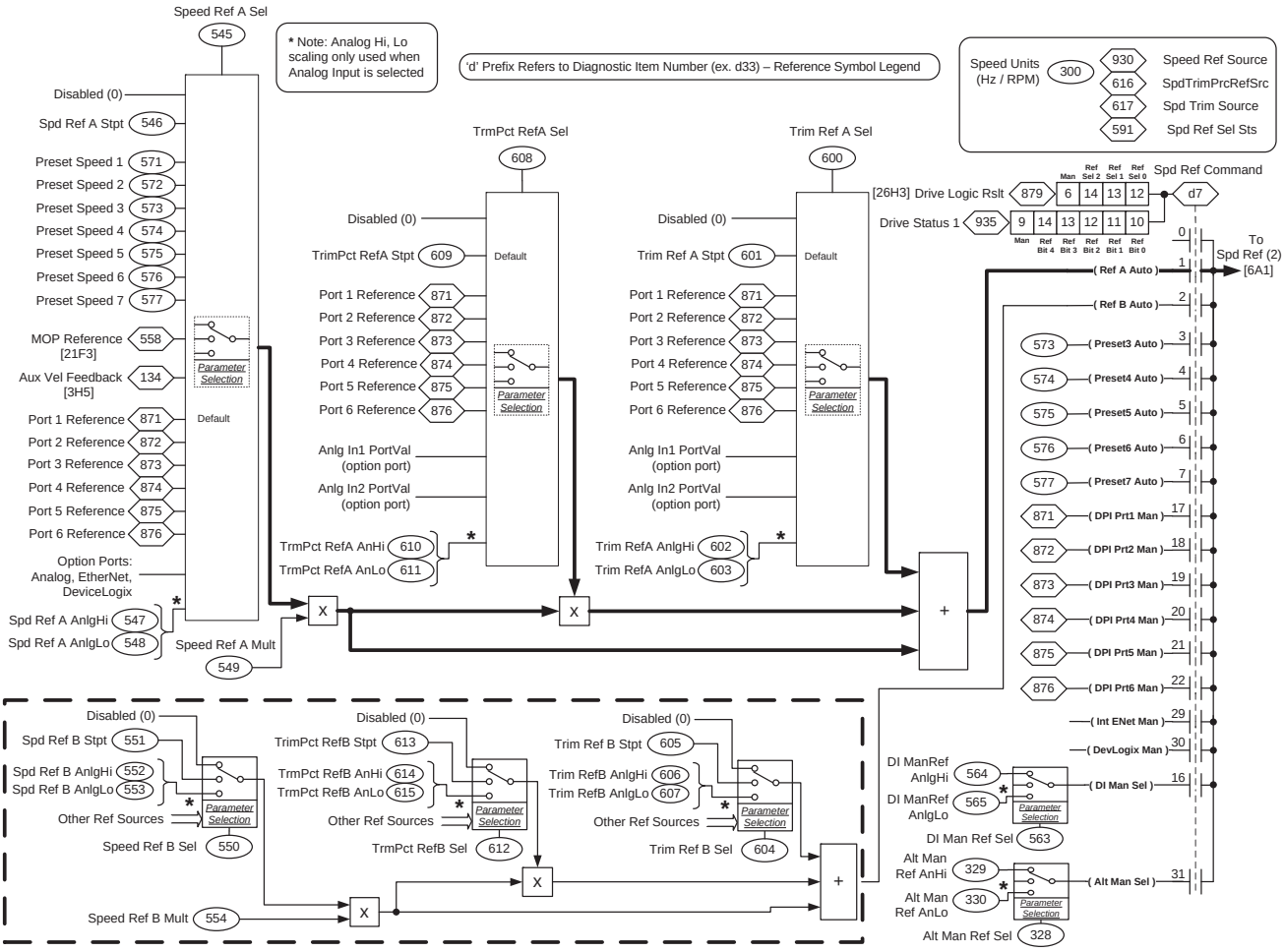

Example 1

The following example shows the configuration and resultant of the percent trim function:

- P545 [Spd Ref A Sel] = P546 [Spd Ref A Stpt]
- P546 [Spd Ref A Stpt] = 20.00 Hz
- P608 [TrmPct RefA Sel] = P609 [TrmPct RefA Stpt]
- P609 [TrmPct RefA Stpt] = 25%
- P2 [Commanded SpdRef] = 25.00 Hz

If the speed reference = 20 Hz and if the trim percentage = 25%, the resulting trim is 20 Hz x 25% = 5 Hz, which when added to the speed reference = 25 Hz. As the speed reference changes, the amount of trim also changes because it is a percent of the speed reference. If the trim percentage = -25%, then the resulting trim is 20 Hz x -25% = -5 Hz, the speed reference = 15 Hz.

Example 2
The following example shows the configuration and resultant of the fixed amount trim function:

- P545 [Spd Ref A Sel] = P546 [Spd Ref A Stpt]
- P546 [Spd Ref A Stpt] = 20.00 Hz
- P600 [Trim Ref A Sel] = P601 [Trim Ref A Stpt]
- P601 [Trim Ref A Stpt] = 10.00 Hz
- P2 [Commanded SpdRef] = 30.00 Hz

If the speed reference = 20 Hz, and if the trim set point = 10 Hz, the speed reference is 20 Hz + 10 Hz = 30 Hz. If the trim set point = -10 Hz, then the speed reference = 10 Hz.

Example 3
The following example shows the configuration and resultant of utilizing both the perfect and fixed amount trim function:

- P545 [Spd Ref A Sel] = P546 [Spd Ref A Stpt]
- P546 [Spd Ref A Stpt] = 20.00 Hz
- P608 [TrmPct RefA Sel] = P609 [TrmPct RefA Stpt]
- P609 [TrmPct RefA Stpt] = 25%
- P600 [Trim Ref A Sel] = P601 [Trim Ref A Stpt]
- P601 [Trim Ref A Stpt] = 10.00 Hz
- P2 [Commanded SpdRef] = 35.00 Hz

If the speed reference = 20 Hz, and if the trim percentage = 25%, that resulting trim is 20 Hz x 25% = 5 Hz, and if the trim set point = 10 Hz, the speed reference is 20 Hz + 5 Hz + 10 Hz = 35 Hz. If the trim percentage = -25% and the trim set point = -10 Hz, then the speed reference = 5 Hz.

Min/Max Fwd/Rev Speed

Maximum and minimum speed limits are applied to the forward and reverse reference. The minimum speed limits create a band that the drive will not run continuously within, but ramps through. This is due to the forward or reverse minimum speeds, P522 [Min Fwd Speed] and P523 [Min Rev Speed] respectively. If the reference is positive and less than the Min Fwd Speed, it is set to the Min Fwd Speed minimum. If the reference is negative and greater than Min Rev Speed minimum, it is set to the Min Rev Speed minimum. If the minimum is not 0, hysteresis is applied at 0 to prevent bouncing between the Min Fwd Speed and Min Rev Speed minimums. If the reference is greater than the forward or reverse maximum speeds, P520 [Max Fwd Speed] and P521 [Max Rev Speed] respectively, the speed reference is clamped to the their respective maximum limit.

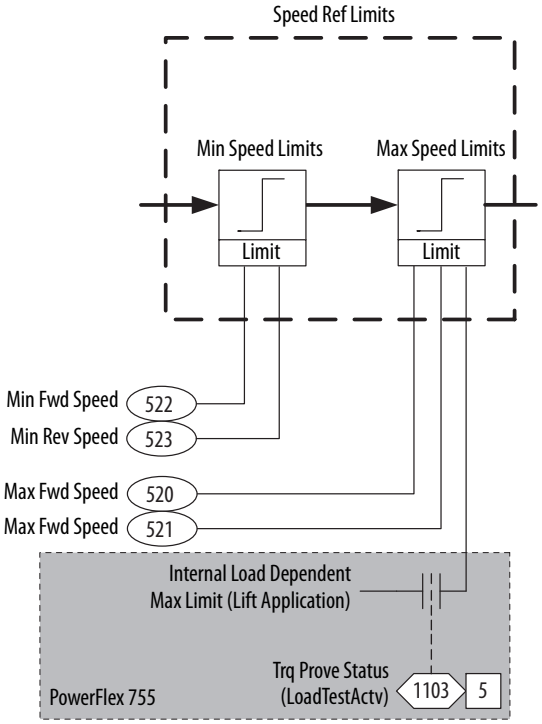

See example below:

- P520 [Max Fwd Speed] = 60 Hz
- P521 [Max Rev Speed] = -60 Hz
- P522 [Min Fwd Speed] = 20 Hz
- P523 [Min Rev Speed] = -20 Hz
- P545 [Spd Ref A Sel] = P546 [Spd Ref A Stpt]

The picture below depicts how the Min/Max Fwd/Rev Speed bands and its influence the drive. The BLUE line depicts the desired speed reference (set point)

and the RED line depicts the drive's commanded speed reference (actual). Notice there are different results, depicted by the grey dotted line, along the graph.

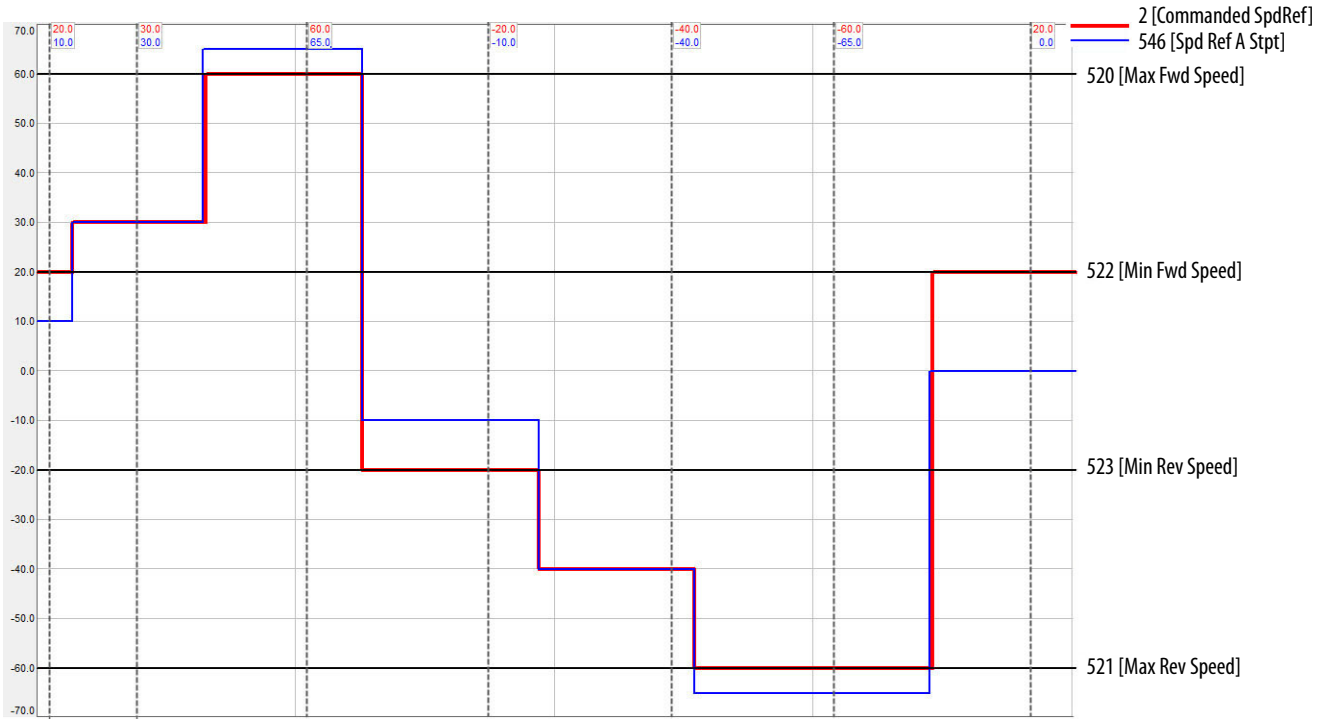

Maximum Frequency

P37 [Maximum Freq] defines the maximum reference frequency. The actual output frequency can be greater as a result of slip compensation and other types of regulation.

Speed Regulation

A number of parameter are used to control speed regulation.

Overall Operation for Sensorless Vector Control and Volts per Hertz Control

The drive takes the speed reference and adjusts it using a proportional and integral regulator to compensate for slip and the programmed limits.

Overall Operation for Flux Vector Control

The drive takes the speed reference that is specified by the speed reference control loop and compares it to the speed feedback. The speed regulator uses proportional and integral gains along with other advanced tuning features to adjust the torque reference that is sent to the motor. The torque reference is used to operate the motor at the specified speed. The regulator is designed for optimal bandwidth for changing speed and load. If an alternate feedback device is used with automatic tachometer switchover, the alternate values of these parameters are used.

Desired Speed Regulator Bandwidth - P636 [Speed Reg BW]

The Speed Regulator Bandwidth sets the speed loop bandwidth and determines the dynamic behavior of the speed loop. As bandwidth increases, the speed loop becomes more responsive and can track a faster changing speed reference. A change to this parameter causes an automatic update of P645 [Speed Reg Kp], P647 [Speed Reg Ki], and P644 [Spd Err Fltr BW]. To disable the automatic gain and filter update, set this parameter to a value of zero. The configuration settings for Inertia Adaption (PowerFlex 755 only) is automatically selected when this feature is enabled.

The maximum allowable value of this parameter is limited by the ratio of P646 [Spd Reg Max Kp] to P76 [Total Inertia], and the type of speed feedback source in use (encoder versus open loop). For operation following an automatic tach switchover, the bandwidth specified in P648 [Alt Speed Reg BW] is used.

Total Inertia of Motor and Load - P76 [Total Inertia]

The Total Inertia is the time in seconds for a motor coupled to its load to accelerate from zero to base speed at rated motor torque. This value is calculated during an Inertia Tune, after the motor has ramped up to speed and down and back down to zero speed. Adjusting this parameter causes the drive to calculate and change the speed regulator gains.

Speed Loop Damping - P653 [Spd Loop Damping]

Sets the damping factor of the vector speed loop's characteristic equation. Damping affects the integral gain when a non-zero bandwidth has been entered. A damping factor of 1.0 is considered critical damping. Lowering the damping produces faster load disturbance rejection, but can cause a more oscillatory response. When the speed regulator bandwidth is zero, gains are set manually and damping factor has no effect.

Integral Gain - P647 [Speed Reg Ki]

Sets the integral gain of the speed regulator (in FV Motor Control modes). This value is automatically calculated based on the bandwidth setting in P636 [Speed Reg BW], P645 [Speed Reg Kp] and P653 [Spd Loop Damping]. Integral gain can be manually adjusted by setting P636 [Speed Reg BW] to a value of zero. Integral gain has effective scaling of (per unit torque/sec) / (per unit speed).

Proportional Gain - P645 [Speed Reg Kp]

This value is automatically calculated based on the bandwidth setting in P636 [Speed Reg BW] and P76 [Total Inertia]. The proportional gain can be manually adjusted by setting P636 [Speed Reg BW] to a value of zero. Proportional gain has effective scaling of (per unit torque) / (per unit speed). The maximum allowable value of this parameter is limited by P76 [Total Inertia] and P646 [Spd Reg Max Kp].

Feed Forward Gain - P643 [SpeedReg AntiBckup]

Controls over-shoot/under-shoot in the step response of the Vector Control mode speed regulator. Over-shoot/under-shoot can be effectively eliminated with a setting of 0.3, which removes backup of the motor shaft when zero speed is reached. This parameter has no affect on the drive's response to load changes. A value of zero disables this feature.

Servo Lock Gain - P642 [Servo Lock Gain] (PowerFlex 755 only)

Sets the gain of an additional integrator in the Vector Control mode speed regulator. The effect of Servo Lock is to increase stiffness of the speed response to a load disturbance. It behaves like a position regulator with velocity feed forward, but without the pulse accuracy of a true position regulator. Gain is normally set to less than 1/3 speed regulator bandwidth, or for the desired response. A value of zero disables this feature.

Torque Reference

The Torque Reference is a reference value in percent that represents the rated torque development capability of the motor. During the autotune process, measurements are made to determine the motor equivalent circuit including connected impedance from drive terminals to the motor. Based on entered motor nameplate information and autotune results, the Torque Reference is established as 100% or 1 PU equal to the rated N•m (lb•ft) torque development capability of the motor at Full Load ampere rating within ±5% without encoder feedback, possibly within ±2% with encoder feedback.

True Torque control at the motor shaft can only occur when P35 [Motor Ctrl Mode] is configured for one of the Flux Vector control mode choices. Likewise, Torque Reference parameters are only active when Flux Vector control modes in P35 [Motor Ctrl Mode], options 3 "Induction FV," 6 "PM FV," and 10 "IPM FV."

Internal Torque Reference Source

The inherent Torque Reference source (default setting in any of the applicable FV Control modes only) is the output from the Speed Regulator parameter, P660 [SReg Output] in percent. As it passes through trimming and limiting functions, it ultimately becomes a commanding torque reference, P690 [Limited Trq Ref], and an input to and for the inverter Current control to output voltage and frequency to the motor and regulate torque producing vector of current accordingly. Consequently, the motor develops torque as necessary to aid the Speed Regulator to maintain minimal speed error between commanded speed and speed feedback.

Figure 30 - Torque Reference Path

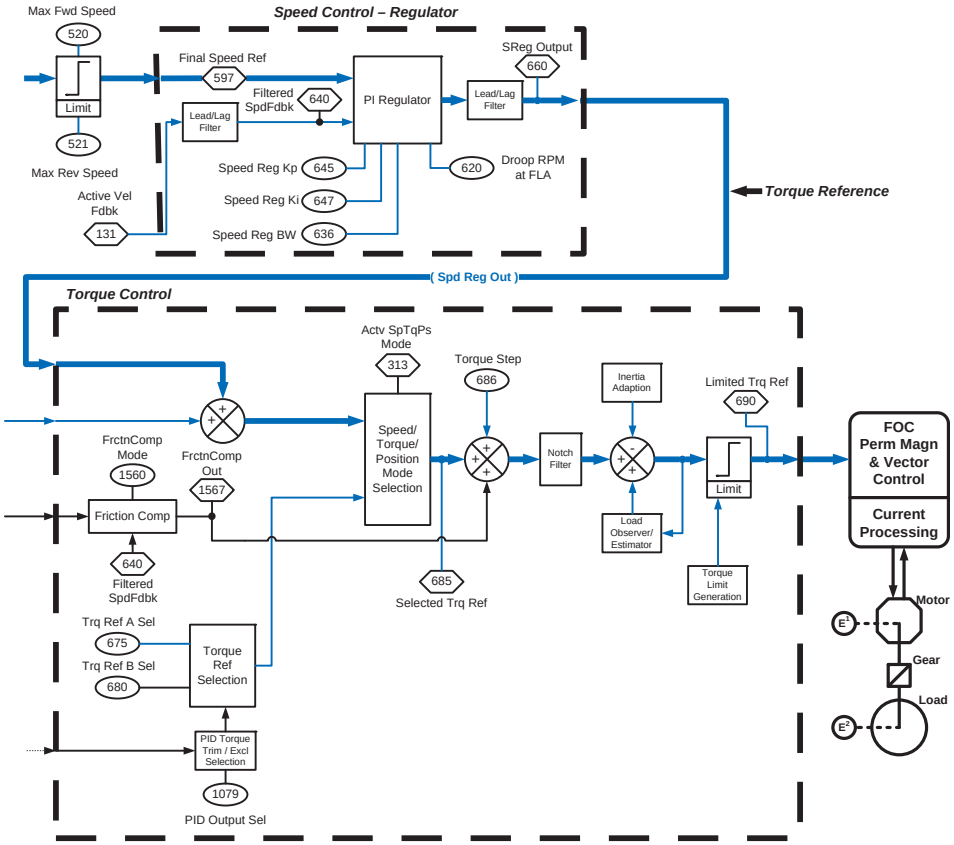

There are additional internal Torque Reference sources within the drive such as from a variety of Position Regulator outputs for the motor to develop the corresponding amount of torque necessary to follow a point to point position profile, cam profile, maintain a set position or follow a Motion Planner directed profile.

The torque reference can be trimmed by Friction Compensation, Inertia Adaption, or Load Observer estimator as the application may dictate. Torque Step, an amount of torque reference step change, can be injected to simulate a load disturbance.

External Torque Reference Source

The Torque Reference can also be established via analog or communication media as a Setpoint reference or brought into the drive externally from a variety of sources including an independent controller or another drive (for load sharing configurations).

When the PowerFlex drive is operated in Torque mode, an alternate source of reference, generally an external signal, is directed to the Torque Control as an active torque reference. Once the scaling is complete on both P675 [Trq Ref A

Sel] and P680 [Trq Ref B Sel], the output can be summed together and along with the output of "Torque Trim," to become P4 [Commanded Trq].

Figure 31 - Torque Control - Reference Scale and Trim

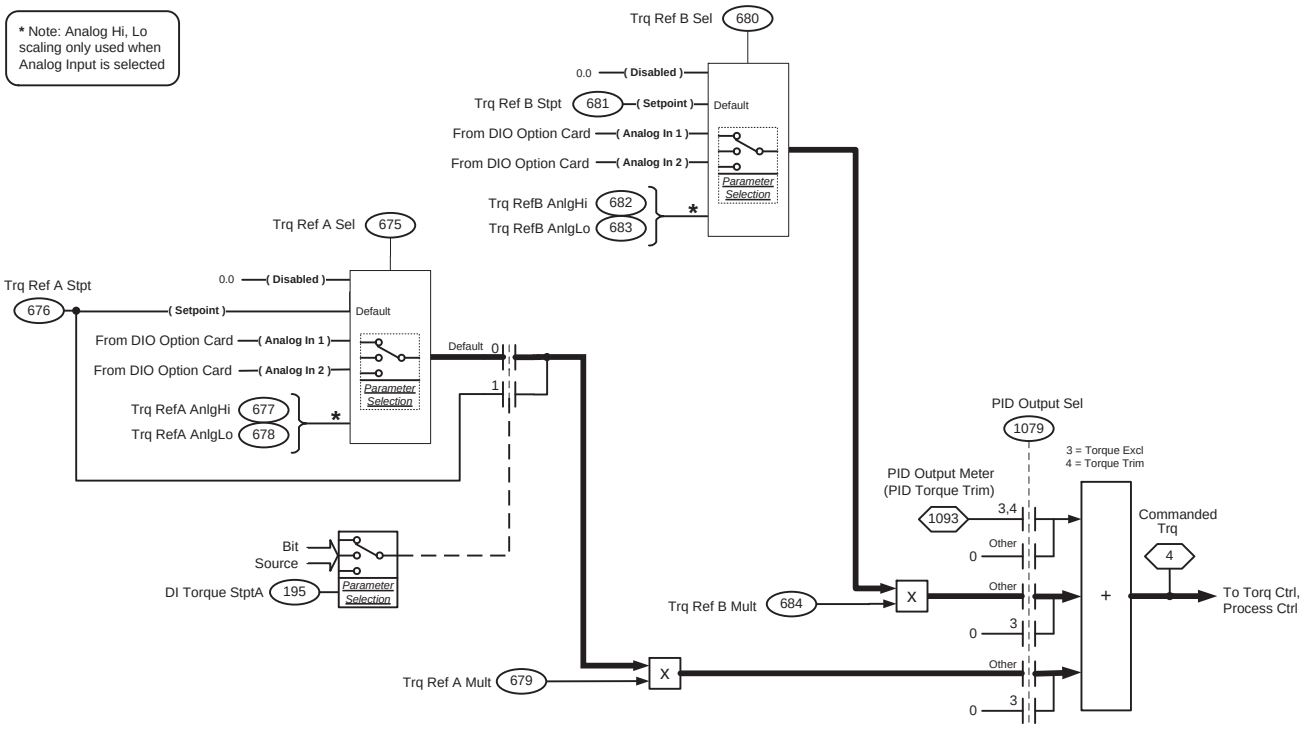

For additional and expanded illustration of the Torque Control, refer to the PowerFlex 755 Control Block Diagrams starting on page 375.

The following are key parameters related to the Torque Reference control illustrated in Figure 30 and Figure 31.

P313 [Actv SpTqPs Mode] - Active Speed Torque Position Mode
Displays the Speed, Torque, Position Mode that is active, based on the dynamic selection of modes A, B, C, and D, per P309...P312 [SpdTrqPsn Mode *n*], and digital input conditions programmed via P181 [DI SpTqPs Sel 0] and P182 [DI SpTqPs Sel 1]. In some cases, such as operation in the SLAT min/max modes, the final regulation mode may be forced into Speed Regulation. Refer to the Speed, Torque, and Position mode bits in P935 [Drive Status 1] that indicate the active regulation mode of the drive when it is running.

P675 [Trq Ref A Sel] and **P680 [Trq Ref B Sel]** - Torque Reference A, B Select
Selects the source for a torque reference, used when the drive is configured to command torque according to P309...312 [SpdTrqPsn Mode *n*]. The values of the torque reference sources are added together to provide a single torque reference.

P676 [Trq Ref A Stpt] and **P681 [Trq Ref B Stpt]** - Torque Reference A, B Setpoint

A digital torque value to be used as a possible source for P675 and P680 respectively.

P677 [Trq Ref A AnlgHi] and **P682 [Trq Ref B AnlgHi]** - Torque Reference A, B Analog High
Used only when an analog input is selected as a torque reference according to P676 or P681. Sets the torque value that corresponds to [Anlg In*n* Hi] on an I/O module or on the main control (product dependent). This establishes scaling throughout the range.

P678 [Trq Ref A AnlgLo] and **P683 [Trq Ref B AnlgLo]** - Torque Reference A, B Analog Low
Used only when an analog input is selected as a torque reference according to P676 [Trq Ref A Stpt] or P681 [Trq Ref B Stpt]. Sets the torque value that corresponds to [Anlg In*n* Lo] on an I/O module or on the main control (product dependent). This establishes scaling throughout the range.

P679 [Trq Ref A Mult] and **P684 [Trq Ref B Mult]** - Torque Reference A, B Multiplier
A multiplier that is applied to the values referenced by P675 [Trq Ref A Sel] and P680 [Trq Ref B Sel] respectively. A value of 1 leaves the reference unaffected. Negative values invert the reference.

Refer to Speed Torque Position on page 266 for an explanation of Speed Torque Position mode choices for operating in various specific modes utilizing Internal and/or External torque reference sources.

Speed Torque Position

The PowerFlex 750-Series drives have the ability to have four separate Speed Torque Position modes with the following parameters:

- P309 [SpdTrqPsn Mode A]
- P310 [SpdTrqPsn Mode B]
- P311 [SpdTrqPsn Mode C]
- P312 [SpdTrqPsn Mode D]

Possible selections for the above Speed/Torque/Position parameters are as follows:

- "Zero Torque" (0) – Drive operates as a torque regulator with P685 [Selected Trq Ref] forced to a constant value of zero torque.
- "Speed Reg" (1) – Drive operates as a speed regulator. P685 [Selected Trq Ref] comes from P660 [SReg Output] plus P699 [Inertia Comp Out].
- "Torque Ref" (2) – Drive operates as a torque regulator. P685 [Selected Trq Ref] comes from P4 [Commanded Trq]. Under some conditions such as jogging or performing a ramp to stop operation, the drive automatically bypasses this selection and temporarily switches to Speed Regulation mode.
- "SLAT Min" (3) – Drive operates in "Speed Limited Adjustable Torque – Minimum select" mode. This is a special mode of operation used primarily in web handling applications. The drive typically operates as a torque regulator, provided that the P4 [Commanded Trq] value is algebraically smaller in value than the speed regulator's output. The drive can automatically enter Speed Regulation mode, based on conditions within the speed regulator and the magnitude of the speed regulator's output relative to the torque reference.
- "SLAT Max" (4) – Drive operates in "Speed Limited Adjustable Torque – Maximum select" mode. This is a special mode of operation used primarily in web handling applications. The drive typically operates as a torque regulator, provided that the P4 [Commanded Trq] value is algebraically larger in value than the speed regulator's output. The drive can automatically enter Speed Regulation mode, based on conditions within the speed regulator and the magnitude of the speed regulator's output relative to the torque reference.
- "Sum" (5) – Drive operates as a speed regulator. P685 [Selected Trq Ref] comes from P660 [SReg Output] plus torque adders summed with P4 [Commanded Trq].
- "Profilier" (6) PowerFlex 755 – Drive uses the Speed Profiler / Position Indexer function. The drive operates as either a speed or position regulator. Mode of operation depends on the configuration of the Step Types in the Profiler/Indexer table.
- "Psn PTP" (7) – Drive operates as a position regulator. P685 [Selected Trq Ref] has the same source as in Sum mode. The position control is active in Point-to-Point mode and uses its Point-to-Point position reference.

- "Psn Camming" (8) PowerFlex 755 – Drive operates as a position regulator. P685 [Selected Trq Ref] has the same source as in Sum mode. The position control is active in Position CAM mode and uses its PCAM Planner position and speed reference.
- "Psn PLL" (9) PowerFlex 755 – Drive operates as a position regulator. P685 [Selected Trq Ref] has the same source as in Sum mode. The position control is active in Position Phase Lock Loop mode and uses its PLL Planner position and speed reference.
- "Psn Direct" (10) – Drive operates as a position regulator. P685 [Selected Trq Ref] has the same source as in Sum mode. The position control is active in Direct mode and uses its Direct Position Reference.
- "Psn SpdlOrnt" (11) PowerFlex 755 – Drive operates in the Positioning mode to position the load side of a machine to P1582 [SO Setpoint].

These modes selections only apply to the Flux Vector control modes in P35 [Motor Ctrl Mode], options 3 "Induction FV," 6 "PM FV," and 10 "IPM FV." These parameters select between speed regulation, torque regulation, or position regulation operation of the drive. The source of P685 [Selected Trq Ref] is determined by the selection in these parameters when P181 [DI SpTqPs Sel 0] and P182 [DI SpTqPs Sel 1] have selected "Disabled" or selected bits that are logic low. In P935 [Drive Status 1], three bits are provided that indicate the Regulation mode of the drive when it is running. Bit 21 "Speed Mode" is set when the drive is running with the speed regulator active. Similarly, Bit 22 "PositionMode" and Bit 23 "Torque Mode" indicate when their respective regulation modes are active. Under some conditions, the active Torque mode can be forced into Speed mode regardless of the setting of Speed/Torque/Position. P313 [Actv SpTqPs Mode] indicates this and reflects the mode selection that is in use.

Figure 32 - PowerFlex 755 Firmware Flowchart

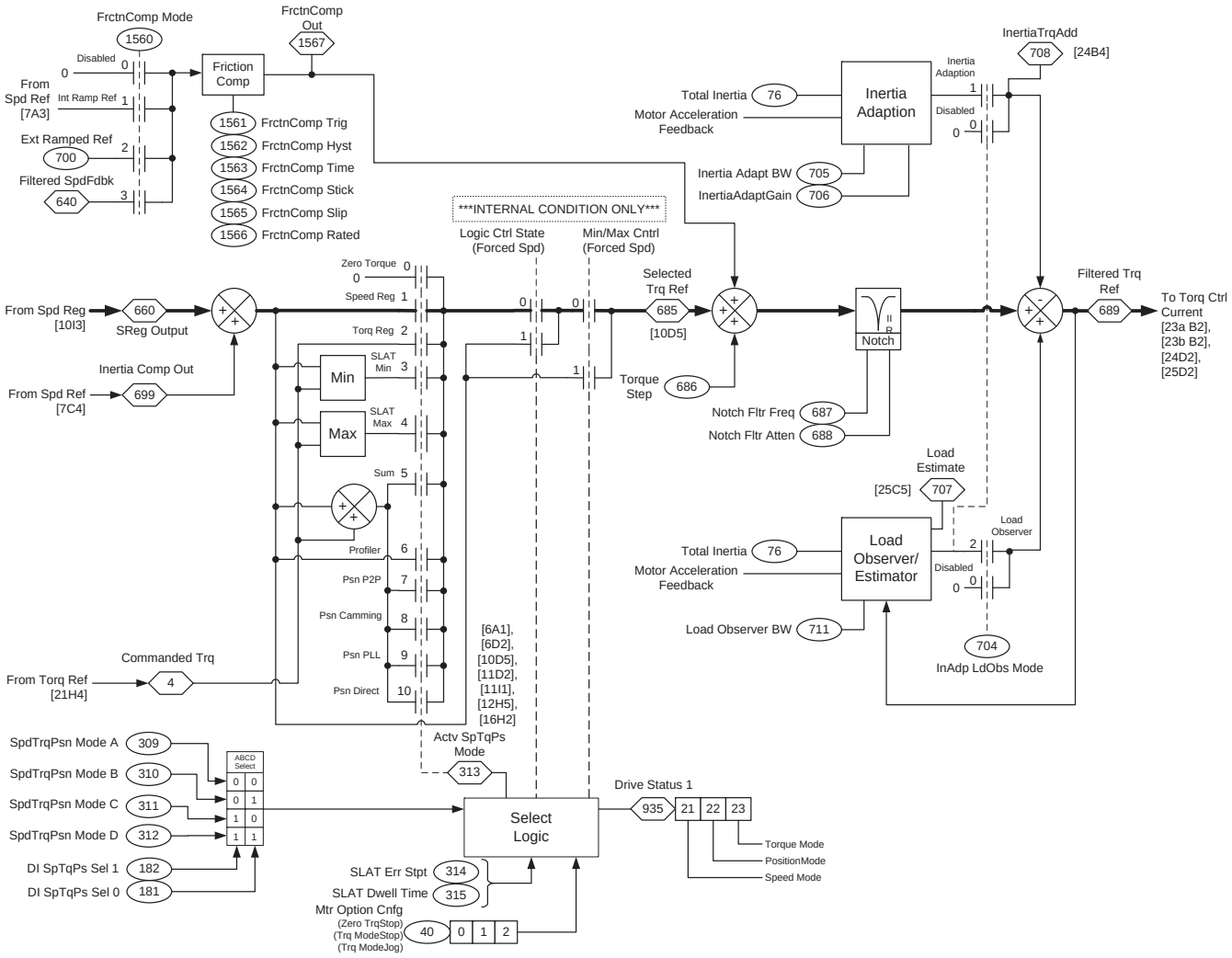

The following are key parameters related to the Torque Reference control illustrated in Figure 32.

P313 [Actv SpTqPs Mode] - Active Speed Torque Position Mode
Displays the Speed, Torque, Position Mode that is active, based on the dynamic selection of modes A, B, C, and D, per P309...P312 [SpdTrqPsn Mode *n*], and digital input conditions programmed via P181 [DI SpTqPs Sel 0] and P182 [DI SpTqPs Sel 1]. In some cases, such as operation in the SLAT min/max modes, the final regulation mode may be forced into Speed Regulation. Refer to the Speed, Torque, and Position mode bits in P935 [Drive Status 1] that indicate the active regulation mode of the drive when it is running.

P314 [SLAT Err Stpt] - Speed Limited Adjustable Torque, Error Setpoint
Sets the magnitude of P641 [Speed Error] at which the SLAT function will release its Forced Speed Mode signal. This condition must exist for the time specified by P315 [SLAT Dwell Time]. Once released, the drive can operate as a torque regulator, depending on the relative levels of P660 [SReg Output] and P4

[Commanded Trq]. This parameter will be entered in units of Hz or RPM, depending on the value of P300 [Speed Units].

P315 [SLAT Dwell Time] - Speed Limited Adjustable Torque, Dwell Time
Sets the time period that P641 [Speed Error] must exceed the P314 [SLAT Err Stpt] magnitude in order to return to min/max torque mode.

P675 [Trq Ref A Sel] and **P680 [Trq Ref B Sel]** - Torque Reference A, B Select
Selects the source for a torque reference, used when the drive is configured to command torque according to P309...312 [SpdTrqPsn Mode *n*]. The values of the torque reference sources are added together to provide a single torque reference.

P685 [Selected Trq Ref] - Selected Torque Reference
Displays the torque value of the selected torque reference (dynamic selection according to P313 [Actv SpTqPs Mode]). This value will be summed with P686 [Torque Step]. The result is then applied to the input of the notch filter located in the Vector torque reference section.

P686 [Torque Step] - Torque Step
Defines the amount of torque reference step change to simulate a load disturbance, used to test the response. This value is added to the main torque reference P685 [Selected Trq Ref], and then applied to the input of the notch filter located in the Vector control torque reference section.

P687 [Notch Fltr Freq] - Notch Filter Frequency
The center frequency for the Notch filter located in the Vector control torque reference section. To disable, set to zero.

P688 [Notch Fltr Atten] - Notch Filter Attenuation
Sets the attenuation of the notch filter located in the Vector control torque reference section. Attenuation is the ratio of the notch filter input signal to its output at the P687 [Notch Fltr Freq]. An attenuation of 30 means that the notch output is 1/30th of the input at the specified frequency.

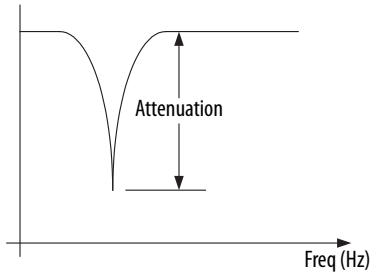

P689 [Filtered Trq Ref] - Filtered Torque Reference
Displays the output of the notch filter defined by P687 and P688. If P704 [InAdp LdObs Mode] indicates that either the Inertia Adaption or Load Estimate functions are active, then the filtered torque reference will also be modified by these functions.

P690 [Limited Trq Ref] - Limited Torque Reference
Displays the torque reference value after filtering (P689), power limits, torque limits, and current limits have been applied. This parameter is the most effective VFD representative Torque Reference value to be monitored for motor load assessment and to be passed on to other drives for load sharing applications involving multiple drives. It represents the percent of the rated torque being developed at the motor shaft.

For additional and expanded illustration of the Torque Control, refer to the PowerFlex 755 Control Block Diagrams starting on page 375.

Speed Torque Position Modes

Zero Torque

Operation in Zero Torque mode enables the motor to be fully fluxed and ready to rotate when a speed command or torque command is given. This mode can be used for a cyclical application where throughput is a high priority. The control logic can select zero torque during the rest portion of a machine cycle instead of stopping the drive. When the cycle start occurs, instead of issuing a start to the drive, a Speed Regulator mode can be selected. The drive immediately accelerates the motor without the need for flux up time.

IMPORTANT	Zero Torque can excessively heat the motor if operated in this mode for extended periods of time. A load or flux current is still present when the drive is operating in Zero Torque mode. A motor with an extended speed range or separate cooling methods (blower) can be required.

Speed Regulation

Operating as a speed regulator is the most common and simplest mode to set up. Examples of speed regulated applications are blowers, conveyors, feeders, pumps, saws, and tools. In a speed regulated application, the speed regulator output generates the torque reference. Note that under steady state conditions the speed feedback is steady while the torque reference is a constantly adjusting signal. This is required to maintain the desired speed. In a transient state, the torque reference changes dramatically to compensate for a speed change. A short duration change in speed is the result of increasing or decreasing the load very rapidly.

For the PowerFlex 755 drive, the Inertia Compensation, Inertia Adaption, and the Friction Compensation influence the output of the speed regulator.

Torque Regulation

A torque regulated application can be described as any process requiring some tension control. An example is a winder or unwinder with material being drawn or pulled with a specific tension required. The process also requires that another

element set the speed. Configuring the drive for torque regulation requires P309 [SpdTrqPsn Mode A] to be set to 2 "Torque Ref." In addition, a reference signal must be linked to the torque reference. For example, when Analog Input 0 is used for the torque reference, P675 [Trq Ref A Sel] needs to be configured for "Anlg In0 Value."

When operating in a Torque mode, the motor current is adjusted to achieve the desired torque. If the material being wound or unwound breaks, the load decreases dramatically and the motor can potentially go into a runaway condition.

Speed Limited Adjustable Torque (SLAT) Modes

The SLAT minimum and SLAT maximum modes are for applications that require a smooth transition from a torque mode to a speed mode operation and vice versa. When operating in a Torque mode, the motor current is adjusted to achieve the desired torque. For example; web handling, center winders and center unwinders or other mechanical drive train where the drive is normally following a torque reference, but a break, disruption in flow or slippage could occur causing the need to prevent a runaway situation, which is best controlled in speed mode.

Direction of the applied torque and direction of the material movement determine whether SLAT minimum or SLAT maximum mode should be used.

SLAT Minimum

Choose SLAT minimum mode when material direction and speed reference is considered "Forward" and a positive speed reference value for the Speed Regulator. The Speed Regulator output then creates a positive Torque Reference command value.

Typically configure a positive speed reference value slightly greater than what is equivalent to maintain planned material line speed. This will in turn force the speed regulator into saturation (the speed reference is slightly above the speed feedback) commanding a "more positive" torque reference than what the torque mode torque reference value is. In this scenario the drive would follow the torque reference until there was a breakage or slippage in the application.

When the drive is following a torque reference (torque mode in SLAT minimum mode), either one of two conditions will force the drive into following the speed reference in (speed mode):

- The output of the speed regulator becomes less than the torque reference. The reaction when triggered at the very point that the torque reference value in speed mode is mathematically less than the value in torque mode, generally results in greater velocity overshoot. This is the same condition that would exist in minimum torque /speed mode without SLAT features. The following plot represents the result without using SLAT features.

Figure 33 - Minimum Torque Speed without SLAT

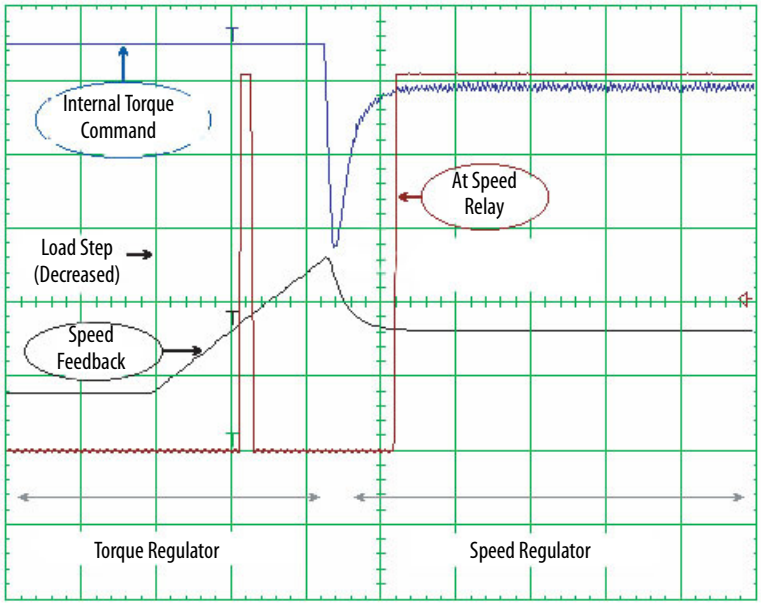

Or

- The speed error becomes negative (the speed feedback becomes greater than the speed reference). This would force the control into speed regulator mode, a condition called Forced Speed Mode FSM.

By forcing the drive to enter speed mode FSM, the transition occurs earlier than it would have if the reaction was triggered at the very point that the torque reference value in speed mode is mathematically less than the value in torque mode, generally resulting in less velocity overshoot.

P314 [SLAT Err Stpt] and P315 [SLAT Dwell Time] allow setting some hysteresis for turning off the forced speed mode. They are set to 0 as default so that there is no hysteresis. In SLAT minimum mode, [SLAT Err Stpt] sets how much less the speed feedback should be than the speed reference before turning off the forced speed mode. The SLAT dwell time sets how long the speed error must exceed the SLAT error set point before turning off the forced speed mode.

At the time that the drive switches from torque mode to forced speed mode, the speed regulator output is loaded with the internal motor torque reference to create a smooth transition. In order for the drive to switch from speed mode back to torque mode, forced speed mode (if active) must first be turned off. Forced speed mode will turn off when the speed error is greater than the SLAT error set point for the SLAT dwell time.

With default parameter settings, this will occur when the speed error becomes positive.

When forced speed mode is off, the drive will switch back to Torque mode when the speed regulator output becomes greater than the torque reference.

Empirically setting values P314 [SLAT Err Stpt] and P315 [SLAT Dwell Time] other than default may help create even smoother transitions.

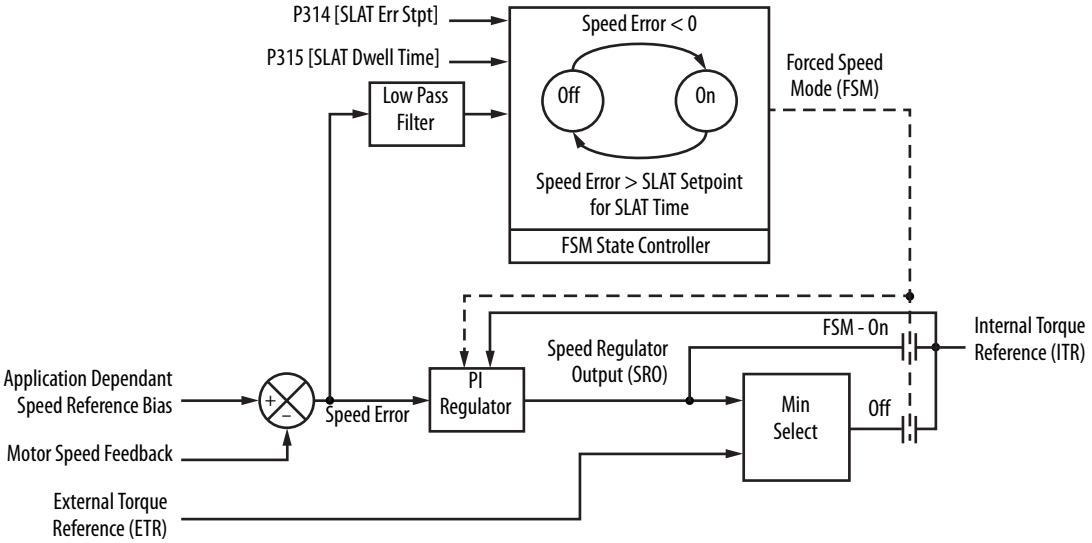

Paper Winder Application Example

The drive is set for SLAT Minimum mode, so that the drive normally runs in Torque mode and follows P675 [Trq Ref A Sel]. [Trq Ref A Sel] comes from an external controller and is approximately 60% of motor torque during the snapshot (shown below). The speed reference, also from an external controller, is set just above the speed feedback to saturate the speed regulator while in Torque mode. The following snapshot captures what occurs in the drive during a break in the web.

Figure 34 - SLAT Min to Forced Speed Mode

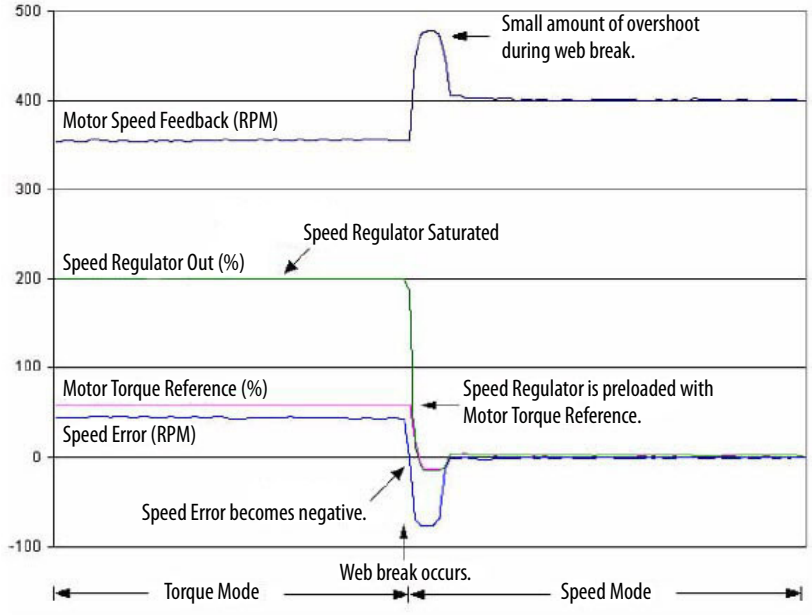

SLAT Maximum Mode

Choose SLAT Maximum mode when material direction and speed reference is considered "Reverse" and a negative speed reference value for the Speed Regulator. The Speed Regulator output then creates a negative Torque Reference command value.

In SLAT Maximum mode, a speed reference is typically configured to force the speed regulator into saturation (the speed reference is slightly below the speed feedback which is equivalent to maintain planned line speed). In this scenario the drive follows the torque reference until there is breakage or slippage in the application.

In SLAT Maximum mode, the drive switches from Torque mode to Speed mode when either one of the two following conditions occur.

- The output of the speed regulator becomes more than the torque reference. This is the same condition that exists in Maximum Torque/ Speed mode without SLAT features.

  Or

- The speed error becomes positive (the speed feedback becomes less than the speed reference). This forces the control into speed regulator mode, a condition called Forced Speed Mode (FSM).

By forcing the drive to enter FSM, the transition occurs earlier than it would have if the reaction was triggered at the very point that the torque reference value in speed mode is mathematically more than the value in torque mode, generally resulting in less velocity overshoot.

P314 [SLAT Err Stpt] and P315 [SLAT Dwell Time] allow for setting some hysteresis for turning off the forced speed mode. They are set to 0 as default so that there is no hysteresis. In SLAT maximum mode, [SLAT Err Stpt] sets how much more the speed feedback (algebraically sign sensitive) should be than the speed reference before turning off the forced speed mode. [SLAT Dwell Time] sets how long the speed error must be less than the SLAT error set point before turning off the forced speed mode.

At the time that the drive switches from torque mode to speed mode the speed regulator output is loaded with the value from the torque reference to create a smooth transition.

In order for the drive to switch from speed mode back to torque mode, forced speed mode (if active) must first be turned off. FSM will turn off when the speed error is less than the SLAT error set point for the SLAT dwell time.

With default parameter settings, this will occur when the speed error becomes negative. When forced speed mode is off, the drive will switch back to torque mode when the speed regulator output becomes less than the torque reference.

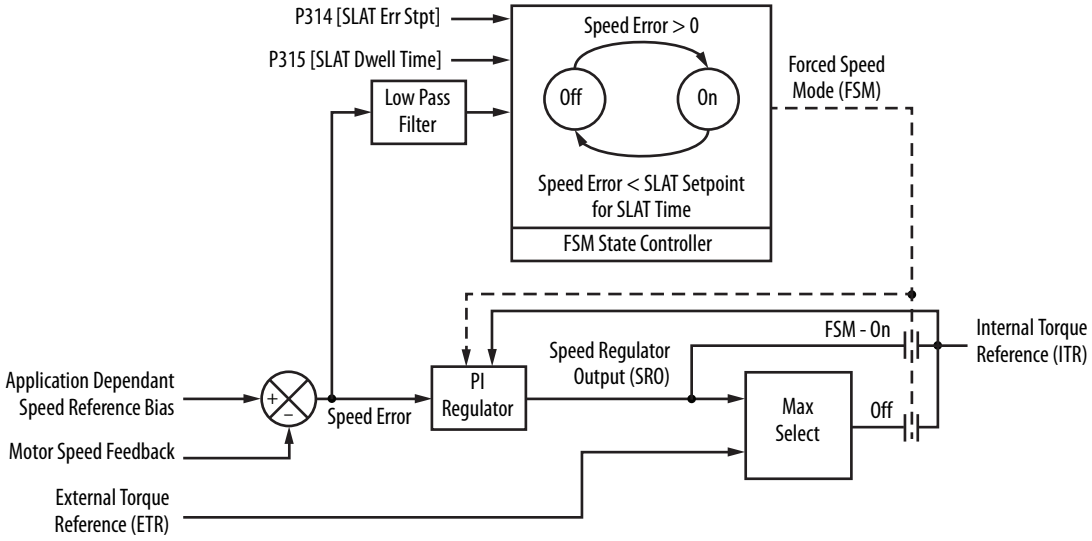

Sum

Configuring the drive in this mode enables an external torque input to be summed with the torque command generated by the speed regulator. This mode requires both a speed reference and a torque reference to be linked. This mode can be used for applications that have precise speed changes with critical time constraints. If the torque requirement and timing is known for a given speed change, then the external torque input can be used to preload the integrator. The timing of the speed change and the application of an external torque command change must be coordinated for this mode to be useful. The “Sum Spd/Trq” mode will then work as a feed forward to the torque regulator.

Notes:

Drive Features

Topic	Page
Data Logging	277
Energy Savings	282
High Speed Trending	283
Position Homing	292

Data Logging

This wizard logs the values of up to six parameters in a single drive at a specified interval for some period of time, with the minimum sample rate one second. The information is saved as a comma delimited *.csv file for use with Microsoft Excel or any other spreadsheet program. Clicking Next lets you configure the data logger. When data logging is completed, click Finish to close the wizard. If you click Finish before the data logging is completed, only the data collected up to that point is saved in the file. You can cancel the wizard at any time by clicking Cancel or the Close icon. All logged data is lost, and the file is deleted.

Configuration Example

1. Connect to the drive that you want to trend via DriveExecutive, DriveExplorer, Logix Designer Drive AOPs, or Connected Components Workbench software tool.
2. Click the Show Wizard icon  .

Depending if you click the wand icon or down arrow icon a particular wizard selection dialog box appears. Select the Data Logging Wizard.



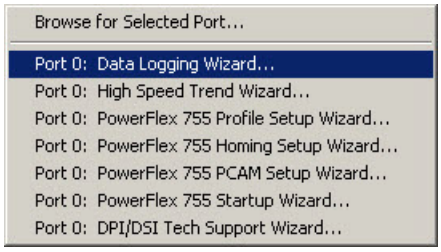

3. Once the Welcome screen loads, click Next.

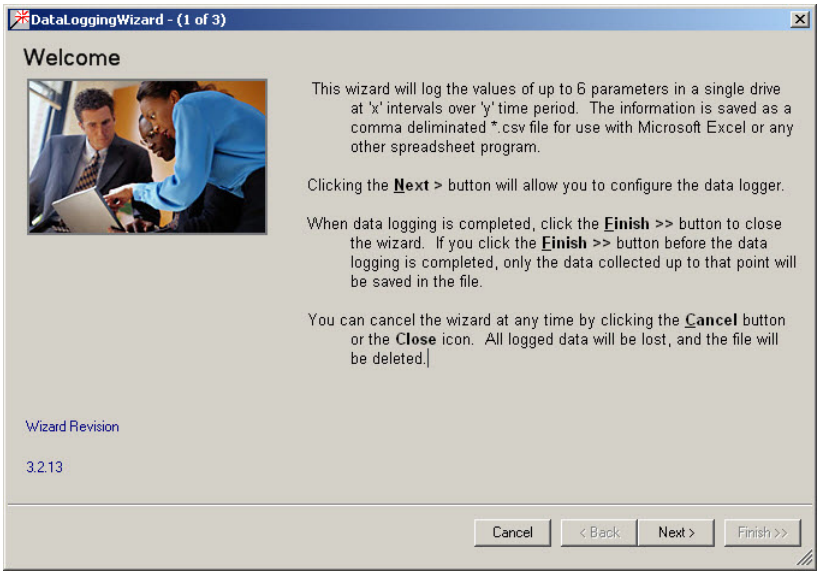

The data logging wizard can be configured to log up to six parameters at a minimum sample rate of one second for a specified time or number of samples.

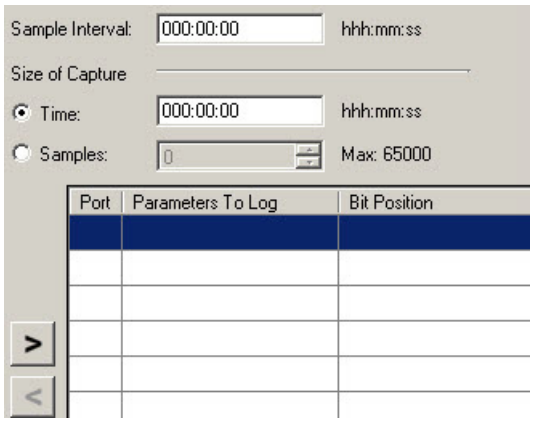

4. To find a parameter that you want to log, select the Port, and then scroll through the parameter lists, file folders, diagnostic items or use the find function.

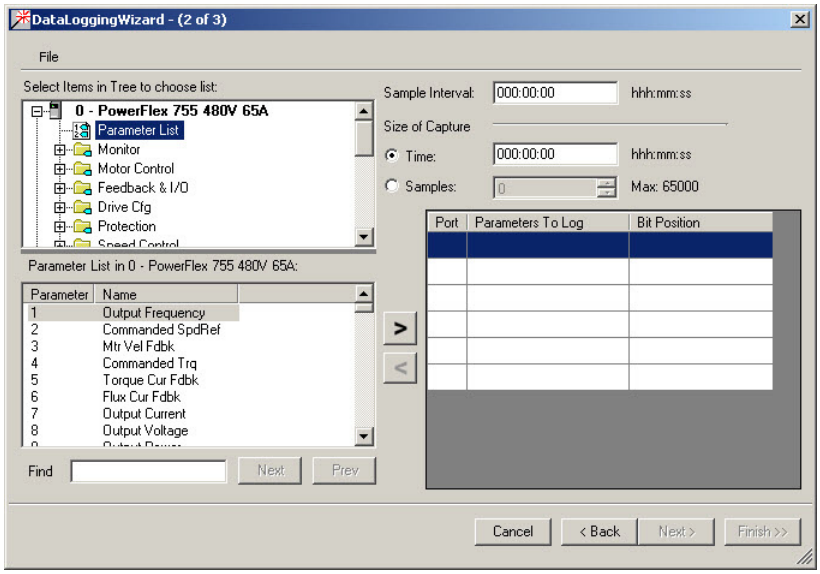

5. To add the parameter to the data log list, select the parameter on the left-side list and click the right arrow  .

   That parameter appears in the first available line entry on the right side.

6. To remove a parameter from the data log list, select the parameter on the right side and click the left arrow  .

   That parameter disappears from that line entry and all subsequent entries are moved up.

In the configuration example below, the data logging wizard is configured to log six drive parameters consisting of Output Frequency, Motor Velocity Feedback, Torque Current Feedback, Output Current, Output Voltage, and DC Bus Voltage parameter values.

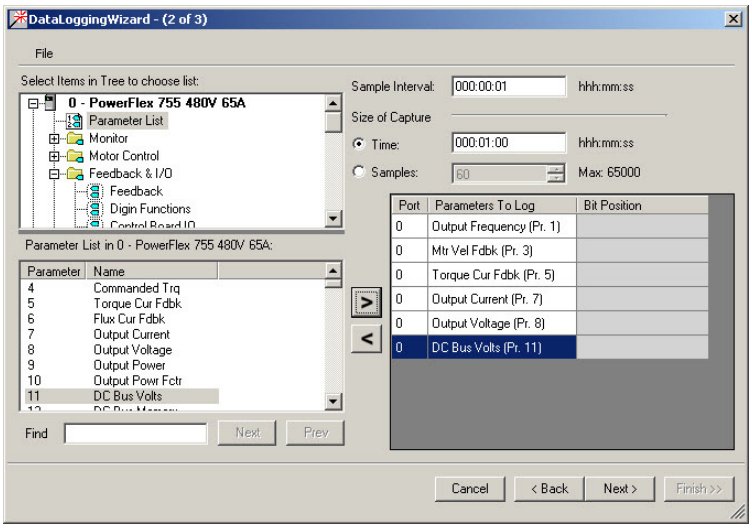

7. Click Next.

This prompt for a save as dialog box that saves the data log information as a comma delimited *.csv file for use with Microsoft Excel or any other spreadsheet program.

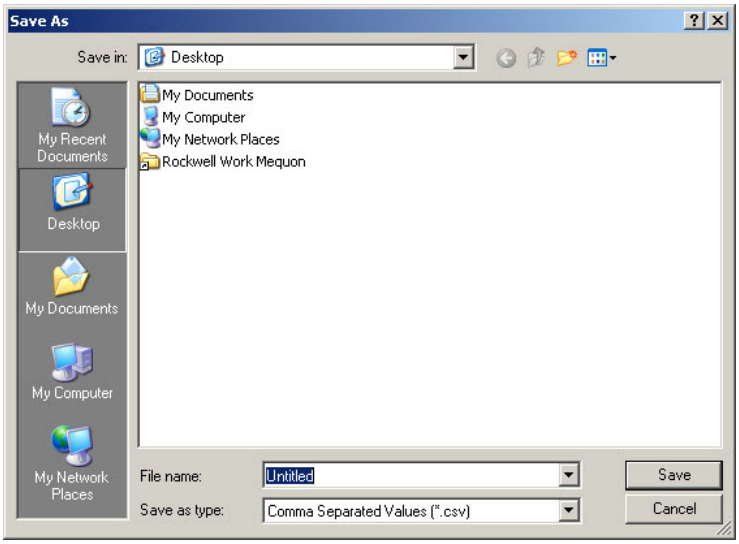

8. To start the data logging, click Save.

   As the data logging begins, a Time Left timer counts down as a blue progress bar moves to the right.

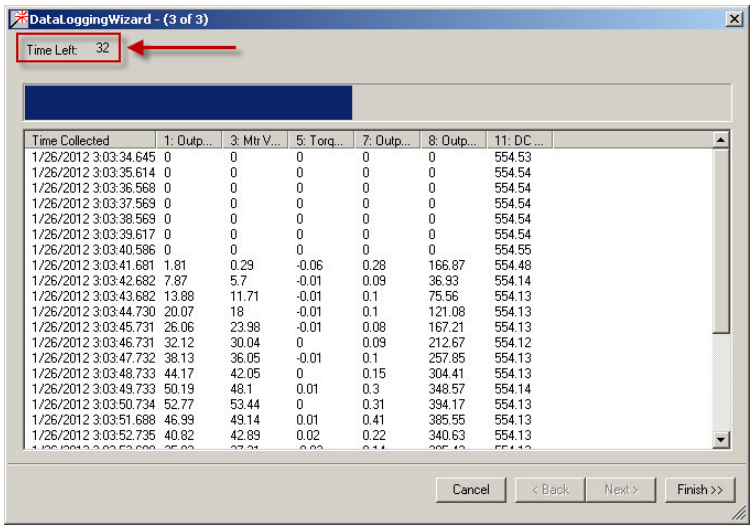

   When the data logging has finished, a Logging Complete message is displayed.

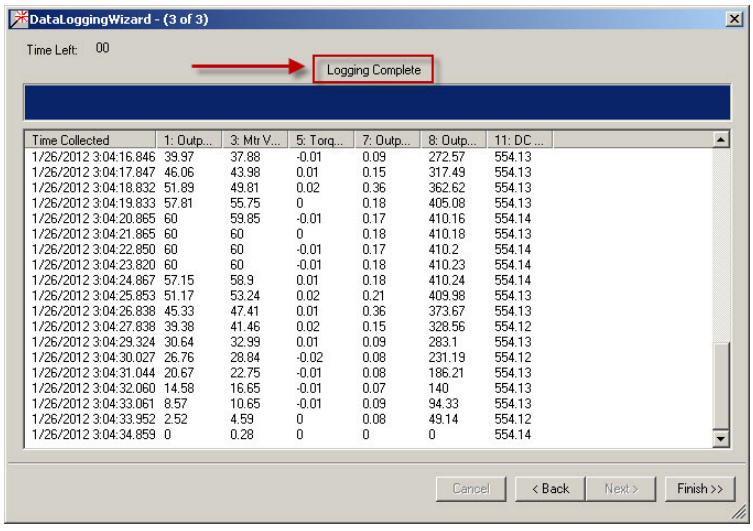

   Each column's width is adjustable.

Below is a spreadsheet example of data logged. Use a spreadsheet program to open the *.csv file.

	A	B	C	D	E	F	G	H	I	J	K
1	Date	Time	Millisecond Part	Ellapsed Milliseconds	Time Label	1: Output Frequency	3: Mtr Vel Fdbk	5: Torque Cur Fdbk	7: Output Current	8: Output Voltage	11: DC Bus Volts
2	26-Jan-12	3:03:34 PM	645	641	03:34.6	0	0	0	0	0	554.53
3	26-Jan-12	3:03:35 PM	614	1610	03:35.6	0	0	0	0	0	554.54
4	26-Jan-12	3:03:36 PM	568	2564	03:36.6	0	0	0	0	0	554.54
5	26-Jan-12	3:03:37 PM	569	3565	03:37.6	0	0	0	0	0	554.54
6	26-Jan-12	3:03:38 PM	569	4565	03:38.6	0	0	0	0	0	554.54
7	26-Jan-12	3:03:39 PM	617	5613	03:39.6	0	0	0	0	0	554.54
8	26-Jan-12	3:03:40 PM	586	6582	03:40.6	0	0	0	0	0	554.55
9	26-Jan-12	3:03:41 PM	681	7677	03:41.7	1.81	0.29	-0.06	0.28	166.87	554.48
10	26-Jan-12	3:03:42 PM	682	8677	03:42.7	7.87	5.7	-0.01	0.09	36.93	554.14
11	26-Jan-12	3:03:43 PM	682	9678	03:43.7	13.88	11.71	-0.01	0.1	75.56	554.13
12	26-Jan-12	3:03:44 PM	730	10726	03:44.7	20.07	18	-0.01	0.1	121.08	554.13
13	26-Jan-12	3:03:45 PM	731	11727	03:45.7	26.06	23.98	-0.01	0.08	167.21	554.13

Energy Savings

Setting the motor control mode P35 [Motor Ctrl Mode] to 2 “Induct Econ” or Induction Economizer mode enables additional energy savings within the drive. To be specific, additional energy savings can be realized in constant torque applications that have constant speed reduced load periods.

Induction Economizer

Induction Economizer mode consists of the sensorless vector control with an additional energy savings function. When steady state speed is achieved, the economizer becomes active and automatically adjusts the drive output voltage based on applied load. By matching output voltage to applied load, the motor efficiency is optimized. Reduced load commands a reduction in motor flux current.

To optimize the performance of the Induction Economizer mode, adjust the following parameters:

- P47 [Econ At Ref Ki] - Integral gain that determines the response of the output voltage when the output frequency is at reference.
- P48 [Econ AccDec Ki] - Integral gain that determines the response of the output voltage when the output frequency is accelerating or decelerating to the reference setpoint.
- P49 [Econ AccDec Kp] - Proportional gain that determines the response of the output voltage when the output frequency is accelerating or decelerating to the reference setpoint.

High Speed Trending

The high speed trending wizard configures the internal trending of the drive, downloads that trend configuration to the drive, and uploads the trended data from the drive when finished. This information is saved as a comma delimited *.csv file for use with Microsoft Excel or any other spreadsheet program.

The high speed trending can be configured to trend up to eight parameters with 4096 samples for each parameter, at a minimum sample rate of 1.024 milliseconds. It can also be configured to trend up to four parameters with 1024 samples for each parameter, at a minimum sample rate of 256 microseconds. These are defined by the drive. Future drives may offer different options.

The PowerFlex 755 drives have the High Speed Trending functionality. PowerFlex 753 drives do not have the High Speed Trending functionality.

You can run only one wizard at a time.

Configuration Example

1. Connect to the drive that you want to trend via DriveExecutive, DriveExplorer, Logix Designer Drive AOPs, or Connected Components Workbench software tool.
2. Click the Show Wizard icon  .

   Depending if you click the wand icon or down arrow icon a particular wizard selection dialog box appears.
3. Select the High Speed Trend Wizard.

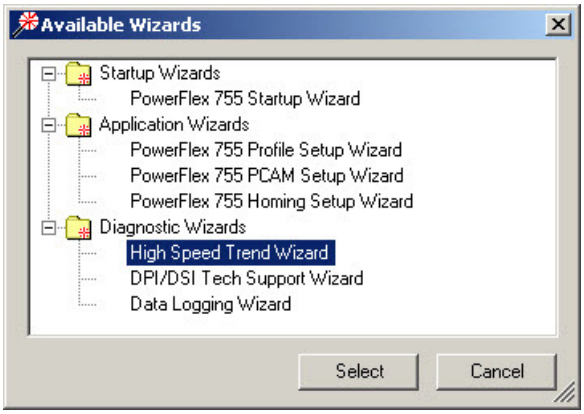

4. Once the Welcome screen loads, Click Next.

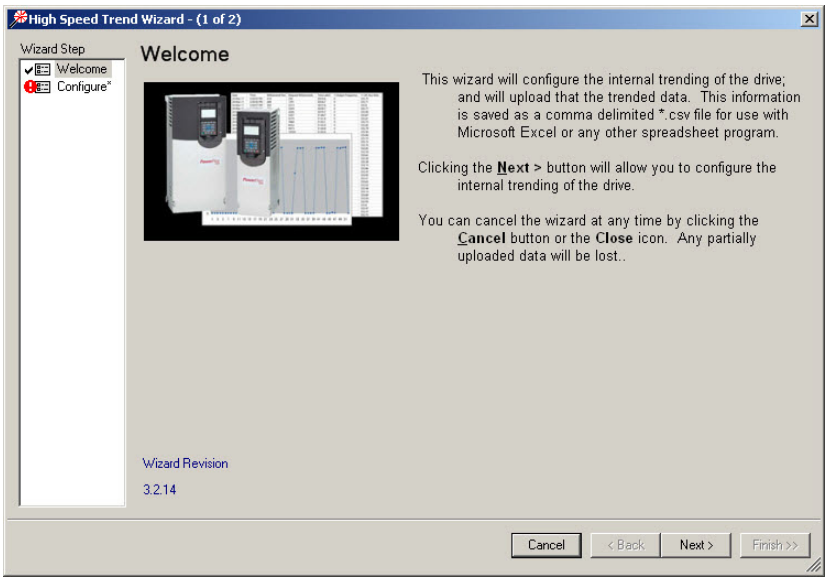

The Configure Trend window lets you customize the following high speed trend details:

- Trend Mode – dictates number of trend buffers, total number of samples, and the minimum interval sample rate.
- Pre-Trigger samples – dictates number of samples to include in the trend before the trigger.
- Sample Interval – the time interval between trend data samples.
- Trigger Setup – dictates how the data trend is triggered
  a. Comparing two parameters
  b. Comparing a parameter against a constant
  c. A test bit in a parameter

- Trend Buffers – dictates the drive and/or peripheral parameters and diagnostic items that are trended.

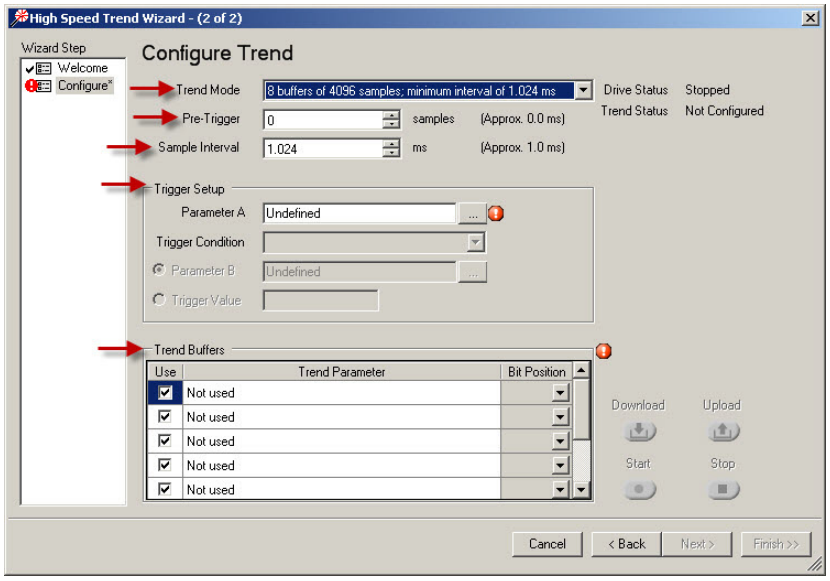

5. To configure the Trigger Setup and Trend Buffers, click the Ellipse button ... .

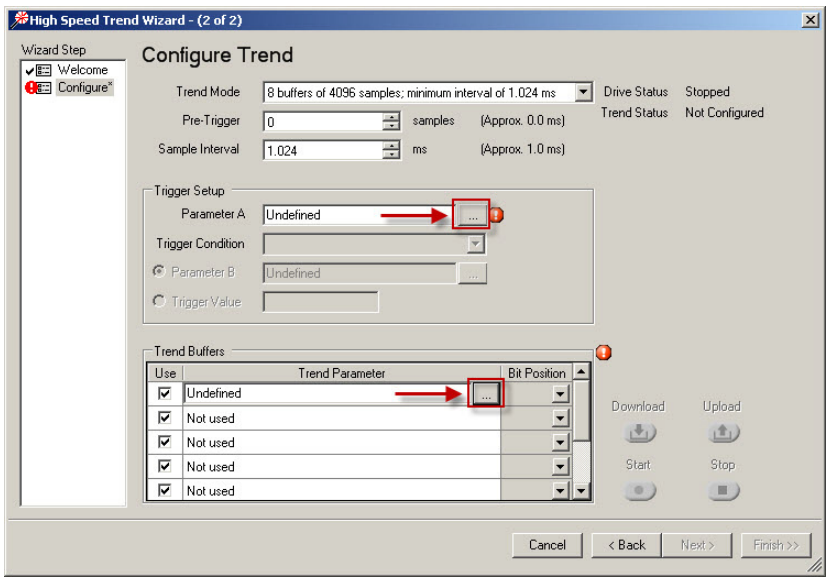

6. Select the parameter that you want to log by selecting the Port, and then scroll through the parameter lists, file folders, diagnostic items or use the find function and click Apply.

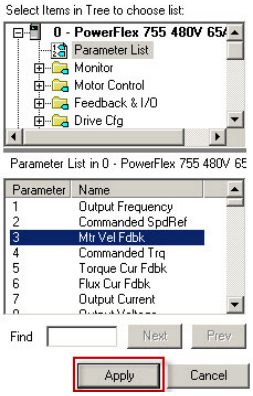

The best way to remove a parameter selection is to uncheck the check box in the Use column.

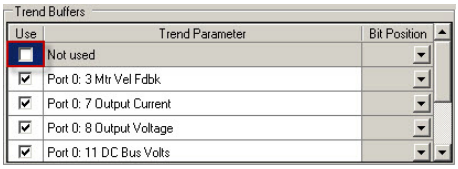

"Not used" is downloaded instead of the selected parameter. The next time you launch the wizard, that buffer has no parameter set.

In the example below, the trend buffers are configured with five drive parameters consisting of Output Frequency, Motor Velocity Feedback, DC Bus Voltage, Output Current, Output Voltage parameter values. The trend is configured for a total of 4096 samples that include 500 samples before the trigger, at a sample rate of 1.024 ms. The trigger of the high speed trend is the Motor Velocity Feedback greater than zero.

This means the following:

- The drive starts trending.
- When the motor starts rotating forward, the trend starts wrapping up.
- The drive continues trending for about 3.7 seconds to use up the remaining 3596 samples.

- The drive stops trending and is ready for uploading.

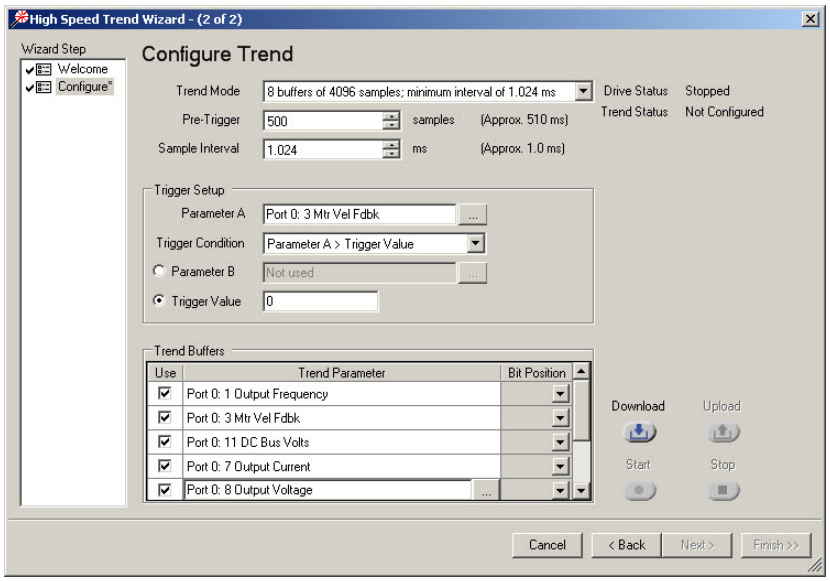

7. Click Download  once the Download Succeeded message has appeared and the Trend Status is Ready.

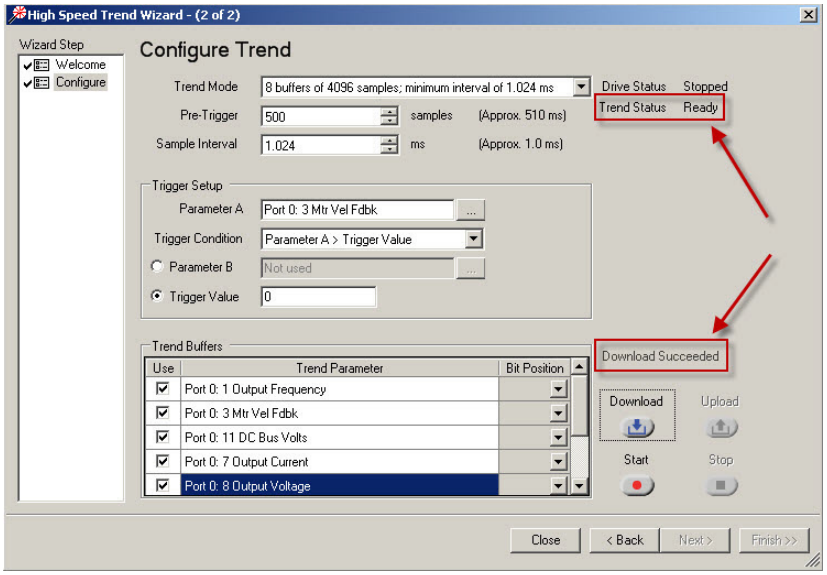

8. Click Start 

.

The Trend Status is Running and Download, Upload and Start buttons are unavailable.

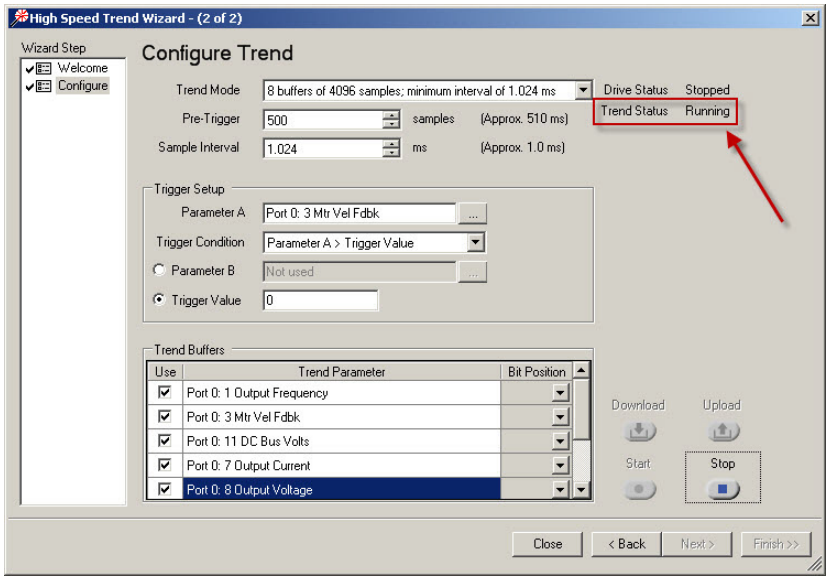

The trending is in process when you see the Trend Status is in the Finishing state. You can stop the trend at any point in time by clicking Stop. You can then upload all of the data gathered so far.

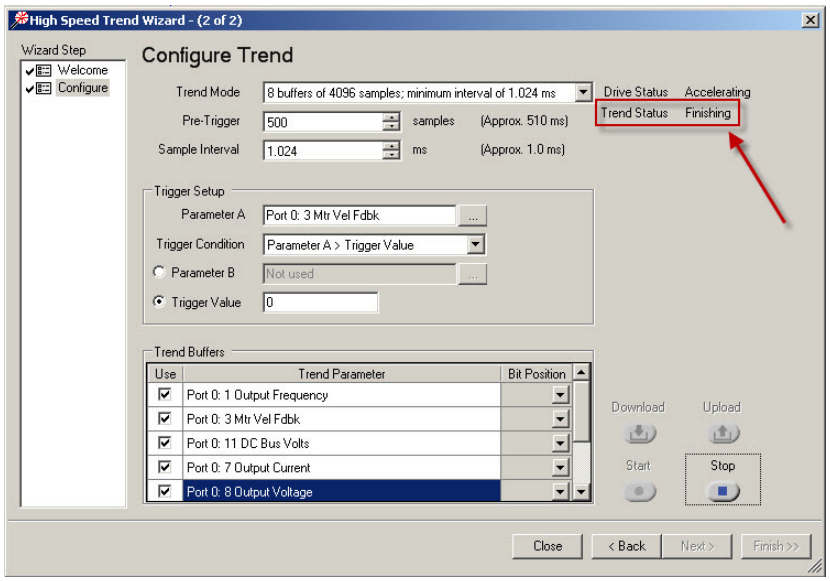

The trending has ended when the Trend Status has changed from Finishing state to the Complete state.

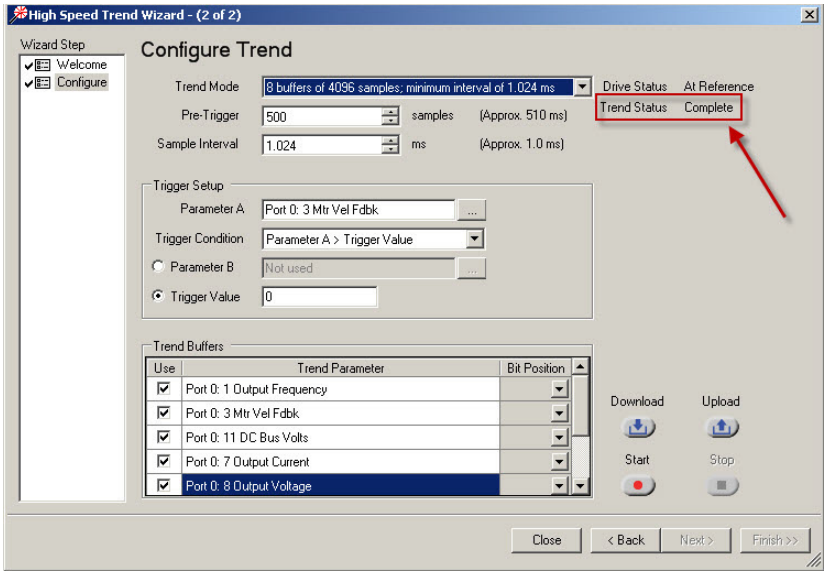

Click Upload 

. This prompts a process that uploads the trend data from the drive and saves the information as a comma delimited *.csv file for use with Microsoft Excel or any other spreadsheet program.

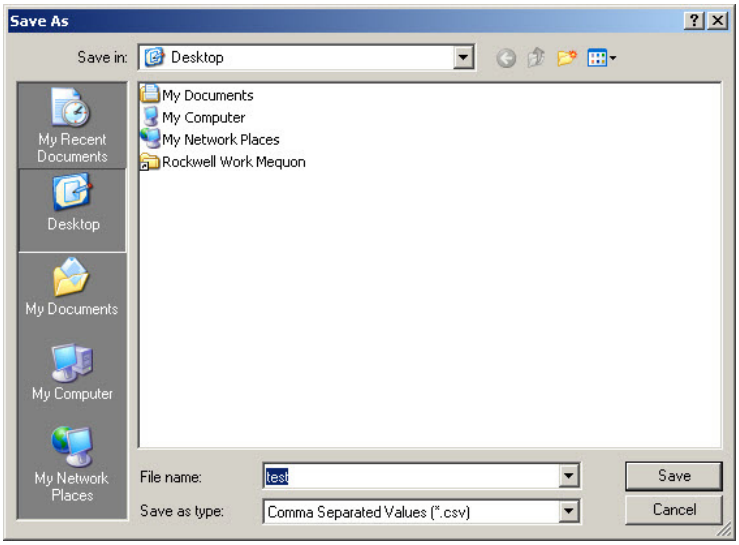

Click Save to start the upload trend data process.

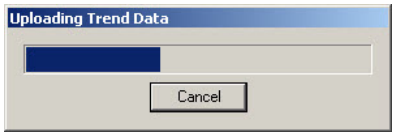

Below is an example of trended data. Use a spreadsheet program to open the *.csv file.

	A	B	C	D	E	F
1	Trigger Time	1/6/1970 21:03:02.493990592				
2						
3	Sample #	Time From Trigger (ms)	Port 0: 1 Output Frequency	Port 0: 1 Output Frequency - Internal Value	Port 0: 3 Mtr Vel Fdbk	Port 0: 3 Mtr Vel Fdbk - Internal Value
502	499	-2.048	0.18	0.1844133	0	0
503	500	-1.024	0.2	0.1967048	0	0
504	501	0	0.21	0.2090035	0.01	0.006590744
505	502	1.024	0.22	0.221308	0.01	0.006590744
506	503	2.048	0.23	0.2336136	0.01	0.008272989
507	504	3.072	0.25	0.2458963	0.01	0.008272989
508	505	4.096	0.26	0.258179	0.01	0.01014278
509	506	5.12	0.27	0.2704785	0.01	0.01014278
510	507	6.144	0.28	0.2827779	0.01	0.01219858
511	508	7.168	0.3	0.2950927	0.01	0.01219858
512	509	8.192	0.31	0.3074133	0.01	0.01443886
513	510	9.216	0.32	0.3197084	0.01	0.01443886
514	511	10.24	0.33	0.3319962	0.02	0.01686212

Column C here lines up with what is displayed in DriveExplorer or any other drive software tool. Column D shows the value that the drive is using internally. Column D has more accurate data, but you may not have a use for the extra precision. You cannot get the data in column D from any other wizard or software tool.

Block Diagram

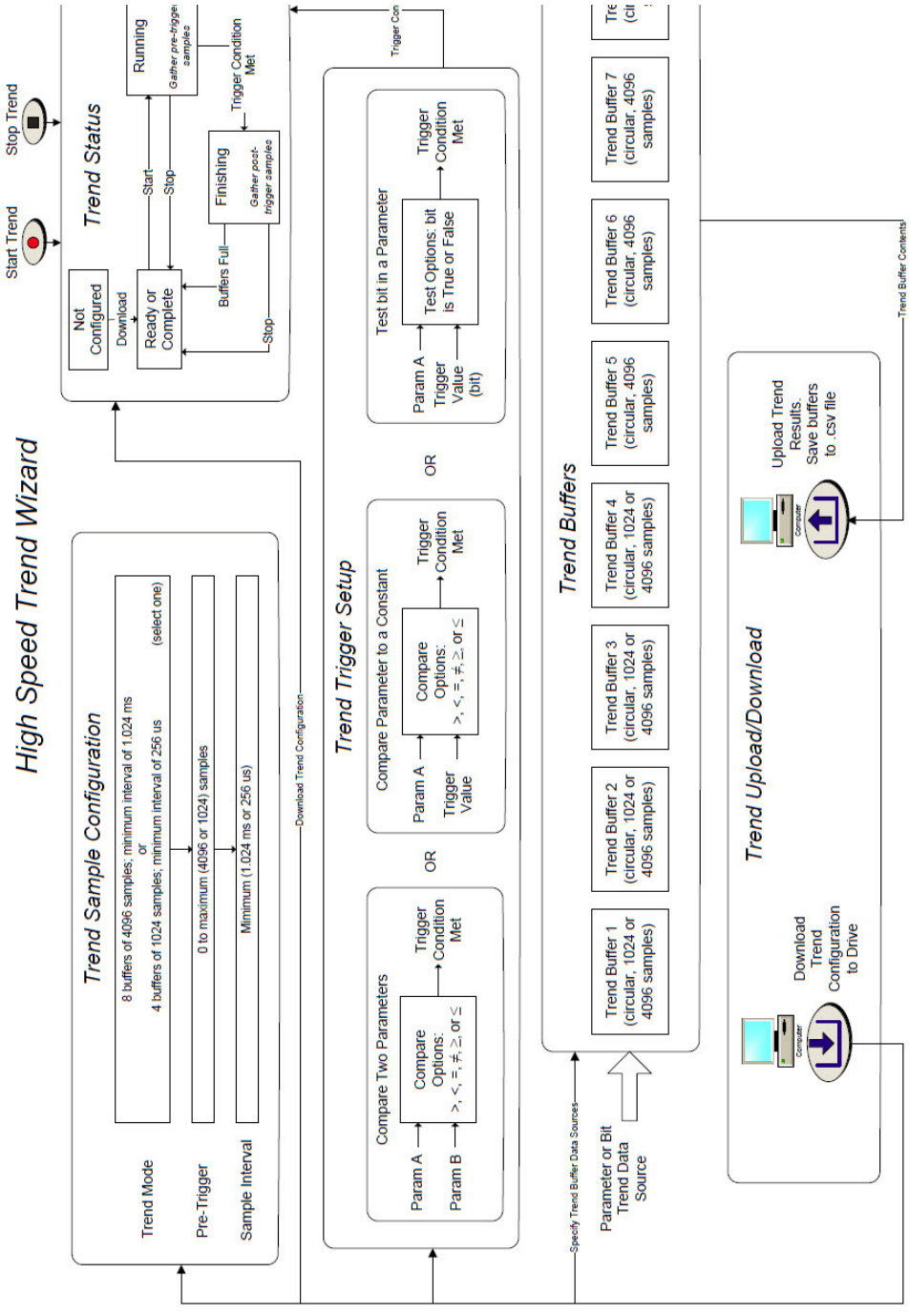

Position Homing

The Homing function is a standalone function of the drive that moves the motor to a home position defined by a switch that is connected to a homing input on a feedback option module, digital input resident on the Main Control Board, or on an I/O option module if there is no feedback module. This function is typically run only once after the drive is powered up or if the drive has become lost. If a universal feedback option module is used, the homing input is part of the general Registration hardware. To perform the homing sequences that require this module, the drive has to configure the Registration function on the module itself.

If a Position Absolute move is made, it is necessary to have performed either a Find Home or a Position Redefine procedure at some time after drive powerup. Until this is done, Bit 19 "Home Not Set" in [Profile Status] remains set, preventing the profile from executing.

The Find Home state is entered from the Initialize Step state when the profile is enabled with the Find Home bit set in the Profile Command parameter. The drive performs a procedure to establish the home position. The procedure consists of a move in Speed mode at the specified Find Home Speed. A digital input is used to sense when the home position limit switch has been traversed. If there is an encoder, the registration logic is used to latch the motor position when the limit switch is reached as the home position. The Find Home function handles three possible cases; Switch and Marker, Switch only, and Marker only.

Homing Input Selection

With Feedback Device
Both the universal feedback option modules and the encoder feedback option modules provide a dedicated homing input. The homing input on the feedback module that is selected by P135[Pos Fdbk Sel] is used for homing. If the marker pulse from an encoder is used in the homing function it is also selected by P135[Pos Fdbk Sel].

Without Feedback Device
If the drive does not have a feedback module and a selection in P135[Psn Fdbk Sel] of "simulator feedback" is made the homing input that the drive uses is selected from any digital inputs residing on an attached I/O module by P734 [DI OL Home Limit]. There is no marker pulse input associated with "open loop" homing.

Homing Activation

A homing function can be selected by either a digital input or a parameter. The digital input is selected from any digital inputs residing on an attached I/O module by Find Home or Return Home. To select the homing function from a parameter set Bit 0 “Find Home” or Bit 3 “Return Home” of P731 [Homing Control]. The homing sequence can be selected regardless of the mode selected in P313 [Actv SpTqPs Mode]. If the drive has a feedback option module, a vector type control must be selected in P35 [Motor Cntl Mode] parameter. If there is no feedback option module, any type of control can be selected.

When the Find Home function is selected by either a digital input or a parameter, either Bit 1 “Home DI” or Bit 2 “Home Maker” or both must be selected in P731 [Homing Control].

When the Return Home function is selected by either a digital input or a parameter, a selection of Bit 1 “Home DI” or Bit 2 “Home Maker” of P731 [Homing Control] is ignored.

To activate a Homing function, a drive start command is required if the drive is stopped. If a drive is running, the drive must be “At Zero Speed” state when the function is selected.

Drive Stopped During Activation
If the drive is stopped, a start command to drive is required to activate a homing sequence.

Drive Started and “At Zero Speed” During Activation
If the drive has already started and “At Zero Speed” the rising edge or toggled bit activates and latches the homing sequence.

Drive Started and not “At Zero Speed” During Activation
If the drive has already started and not “At Zero Speed” the rising edge is ignored and the homing sequence will not start.

Homing to Limit Switch with Feedback

Upon activation of homing the drive starts moving in Speed Control mode, and ramp to the speed and direction set in P735 [Find Home Speed] at the rate set in P736 [Find Home Ramp]. When the limit/proximity switch is reached the “Homing Input” is set. The position count is latched and is considered the home position count. The drive then ramps to zero at the rate set in P736 [Find Home Ramp]. The drive then performs a point-to-point position move back to the home position count in speed of 1/10 of P735 [Find Home Speed]. When the motor is “At Position” and “At Zero Speed,” the homing sequence is complete.

NOT Hold At Home, P731 Bit 7
If a position control type mode is selected in P313 [Actv SpTqPs Mode] the drive continues running, holding position and transferring position reference back to its previous source. If velocity control type mode is selected in P313 [Actv SpTqPs Mode] the drive continues running holding zero velocity and transferring velocity reference back to its previous source.

Hold At Home, P731 Bit 7
If a position control type mode is selected in P313 [Actv SpTqPs Mode] the drive continues running, holding position; the drive then transfers position reference back to its previous source once it receives a start command. If velocity control type mode is selected in P313 [Actv SpTqPs Mode] the drive continues running holding zero velocity; the drive then transfers velocity reference back to its previous source once it receives a start command.

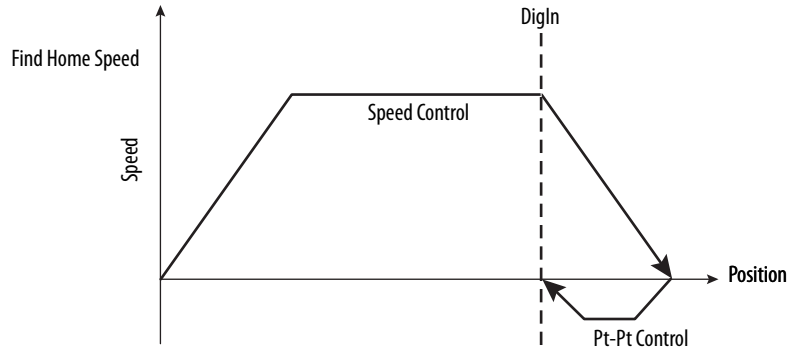

Homing to Marker Pulse with Feedback Upon activation of homing the drive starts moving in Speed Control mode, and ramps to the speed and direction set in P735 [Find Home Speed] at the rate set in P736 [Find Home Ramp]. When the Marker Pulse input is set the position count is latched and is considered the home position count after the marker pulse is reached, the drive then ramps to zero in P736 [Find Home Ramp]. The drive then performs a point-to-point position move back to the home position count in speed of 1/10 of P735 [Find Home Speed]. When the motor is "At Position" and "At Zero Speed," the homing sequence completes.

NOT Hold At Home, P731 Bit 7
If a position control type mode is selected in P313 [Actv SpTqPs Mode] the drive continues running, holding position and transferring position reference back to its previous source. If velocity control type mode is selected in P313 [Actv SpTqPs Mode] the drive continues running holding zero velocity and transferring velocity reference back to its previous source.

Hold At Home, P731 Bit 7
If a position control type mode is selected in P313 [Actv SpTqPs Mode] the drive continues running, holding position; the drive then transfers position reference back to its previous source once it receives a start command. If velocity control type mode is selected in P313 [Actv SpTqPs Mode] the drive continues running

holding zero velocity; the drive then transfers velocity reference back to its previous source once it receives a start command.

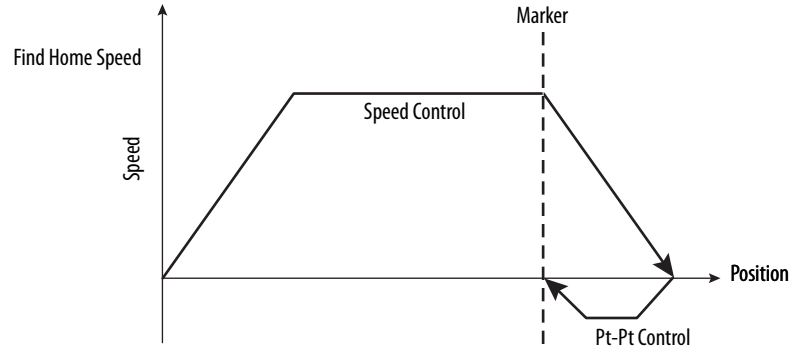

Homing to Switch and Marker Pulse with Feedback

Upon activation of homing the drive starts moving in Speed Control mode, and ramp to the speed and direction set in P735 [Find Home Speed] at the rate set in P736 [Find Home Ramp]. As the motor moves toward the limit/proximity switch, the marker pulse is triggering a register on the feedback module to latch the current position count. When the limit/proximity switch is reached the "Homing Input" is set. The last maker pulse position count that was latched prior to the "Homing Input" being set is considered the home position count. The drive then ramps to zero at the rate set in P736 [Find Home Ramp]. The drive then performs a point-to-point position move back to the home position count in speed of 1/10 of P735 [Find Home Speed]. When the motor is "At Position" and "At Zero Speed", the homing sequence completes.

NOT Hold At Home, P731 Bit 7
If a position control type mode is selected in P313 [Actv SpTqPs Mode] the drive continues running, holding position, and transferring position reference back to its previous source. If velocity control type mode is selected in P313 [Actv SpTqPs Mode] the drive continues running holding zero velocity and transferring velocity reference back to its previous source.

Hold At Home, P731 Bit 7
If a position control type mode is selected in P313 [Actv SpTqPs Mode] the drive continues running, holding position; the drive then transfers position reference back to its previous source once it receives a start command. If velocity control type mode is selected in P313 [Actv SpTqPs Mode] the drive continues running

holding zero velocity; the drive then transfers velocity reference back to its previous source once it receives a start command.

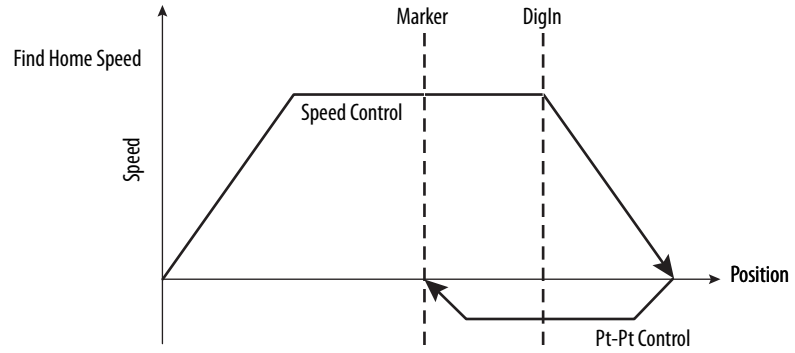

Find Home DI without Feedback Device

Upon activation of homing the drive starts moving in Speed Control mode, and ramp to the speed and direction set in P735 [Find Home Speed] at the rate set in P736 [Find Home Ramp]. When the limit/proximity switch is reached the "Homing Input" is set.

If P35 [Motor Ctrl Mode] = 3 "Induction FV" P847 [Psn Fdbk] count is latched and is considered the home position count. The drive then ramps to zero at the rate set in P736 [Find Home Ramp]. The drive then performs a point-to-point position move back to the home position count in speed of 1/10 of P735 [Find Home Speed]. When the motor is "At Position" and "At Zero Speed, the homing sequence completes.

NOT Hold At Home, P731 Bit 7
If a position control type mode is selected in P313 [Actv SpTqPs Mode] the drive continues running, holding position and transferring position reference back to its previous source. If velocity control type mode is selected in P313 [Actv SpTqPs Mode] the drive continues running holding zero velocity and transferring velocity reference back to its previous source.

Hold At Home, P731 Bit 7
If a position control type mode is selected in P313 [Actv SpTqPs Mode] the drive continues running, holding position; the drive then transfers position reference back to its previous source once it receives a start command. If velocity control type mode is selected in P313 [Actv SpTqPs Mode] the drive continues running

holding zero velocity; drive then transfers velocity reference back to its previous source once it receives a start command.

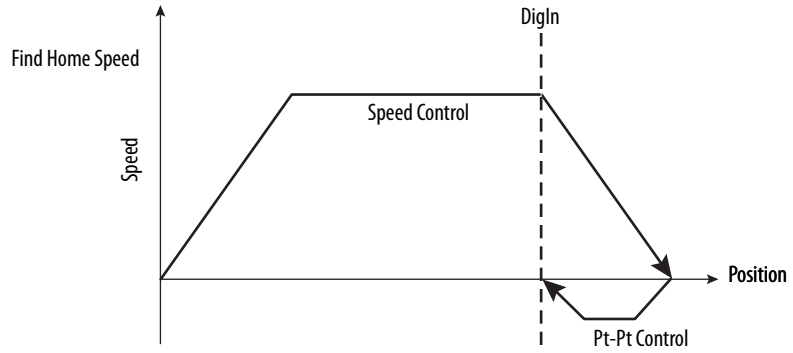

If P35[Motor Ctrl Mode] = 0 "Induction VHz" or 1 "Induction SV"
The drive then ramps to zero at the rate set in P736 [Find Home Ramp].

If the drive travels passed the proximity switch during decel
The drive reverses direction at a speed of 1/10 of P735 [Find Home Speed]. The drive must then receive a rising edge of the proximity switch followed by a falling edge pulse. Upon receiving the falling edge pulse the drive will decel at the rate set in P736 [Find Home Ramp]. When the motor is "At Zero Speed," the homing sequence completes.

If the drive remains on proximity switch during decel
The drive reverses direction at a speed of 1/10 of P735 [Find Home Speed]. When the falling edge of the limit/proximity switch is reached the drive will decel at rate set in P736 [Find Home Ramp]. When the motor is "At Zero Speed," the homing sequence completes.

NOT Hold At Home, P731 Bit 7
If a position control type mode is selected in P313 [Actv SpTqPs Mode] the drive continues running, holding position and transferring position reference back to its previous source. If velocity control type mode is selected in P313 [Actv SpTqPs Mode] the drive continues running holding zero velocity and transferring velocity reference back to its previous source.

Hold At Home, P731 Bit 7
If a position control type mode is selected in P313 [Actv SpTqPs Mode] the drive continues running, holding position; the drive then transfers position reference back to its previous source once it receives a start command. If velocity control type mode is selected in P313 [Actv SpTqPs Mode] the drive continues running

holding zero velocity; drive then transfers velocity reference back to its previous source once it receives a start command.

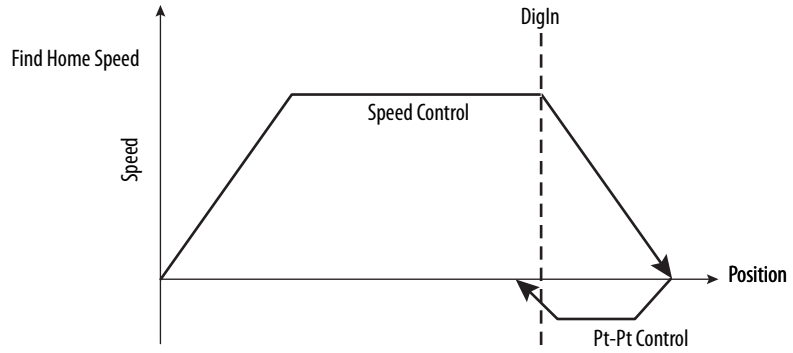

Integrated Motion on the EtherNet/IP Network Applications for PowerFlex 755 AC Drives

Topic	Page
Additional Resources for Integrated Motion on the EtherNet/IP Network Information	300
Coarse Update Rate	301
Control Modes for PowerFlex 755 Drives Operating on the Integrated Motion on the EtherNet/IP Network	301
Drive Nonvolatile (NV) Memory for Permanent Magnet Motor Configuration	308
Dual Loop Control	309
Dual-Port EtherNet/IP Option Module (ETAP)	315
Hardware Over Travel Considerations	316
Integrated Motion on EtherNet/IP Instance to PowerFlex 755 Drive Parameter Cross-Reference	317
Motor Brake Control	338
Network Topologies	341
PowerFlex 755 and Kinetix 7000 Drive Overload Rating Comparison for Permanent Magnet Motor Operation	345
PowerFlex 755 Drive Option Module Configuration and Restrictions	346
Regenerative/Braking Resistor	347
Safe Speed Monitor Option Module (20-750-S1) Configuration	350
Speed Limited Adjustable Torque (SLAT)	353
Supported Motors	357
System Tuning	363
Using an Incremental Encoder with an MPx Motor	372
PowerFlex 755 Integrated Motion on the EtherNet/IP Network Block Diagrams	375

Additional Resources for Integrated Motion on the EtherNet/IP Network Information

These documents contain additional information on the Integrated Motion on the EtherNet/IP Network for PowerFlex 755 AC drive applications.

Resource	Description
PowerFlex 750-Series Drive Programming Manual, publication 750-PM001	Provides detailed information on: • I/O, control, and feedback options • Parameters and programming • Faults, alarms, and troubleshooting
PowerFlex 750-Series Drive Installation Instructions, publication 750-IN001	Provides instructions for: • Mechanical installation • Connecting incoming power, the motor, and basic I/O
PowerFlex 750-Series Drive Technical Data, publication 750-TD001	Provides detailed information on: • Drive specifications • Option specifications • Fuse and circuit breaker ratings
Integrated Motion on the Ethernet/IP Network User Manual, publication MOTION-UM003	Use this manual to configure an Integrated Motion on the Ethernet/IP network application and to start up your motion solution using the ControlLogix™ system.
Logix5000 Controllers Motion Instructions Reference Manual, publication MOTION-RM002	Provides details about the motion instructions that are available for a Logix5000 controller.
Kinetix® Motion Control Selection Guide, publication GMC-SG001	This selection guide is meant to help make initial decisions for the motion control products best suited for your system requirements. In addition, there are technical data publications with product specifications and design guide publications with selection information, specific to each drive family, to determine the accessories needed for your application. The design guides also include the recommended motor cables, performance specifications, and torque/speed (rotary) and force/velocity (linear) curves for each drive and motor/actuator combination.

You can view or download publications at http:/www.rockwellautomation.com/literature/. To order paper copies of technical documentation, contact your local Allen-Bradley distributor or Rockwell Automation sales representative.

Software Tools

Integrated Architecture Builder can be downloaded at: http://www.rockwellautomation.com/en/e-tools/configuration.html

Motion Analyzer can be downloaded at: http://motion-analyzer.com/

Coarse Update Rate

The position loop for the PowerFlex 755 drive is updated at a rate of 1.024 ms (1024 µsec). During each position loop update the drive can either read or write data to the embedded Ethernet port, but cannot do both operations during the same update. Therefore the drive can receive only new updates every other position loop update event. To read new information from the Motion Planner (that is controller), the minimum coarse update rate must be 2.5 ms or greater to be sure that no data packets are lost. If the PowerFlex 755 drive is operated at a coarse update rate of less than 2.5 ms, data packets can be lost (resulting in the drive interpolating between missed updates), and/or the drive can fault if enough data packets are missed consecutively. Rockwell Automation recommends a minimum coarse update rate of 3 ms for the PowerFlex 755 drive.

Control Modes for PowerFlex 755 Drives Operating on the Integrated Motion on the EtherNet/IP Network

Integrated Motion on the EtherNet/IP network is a feature available with firmware revision 2.xxx and later for PowerFlex 755 drives. This feature provides a common user experience as with Kinetix 6500 drives when used with Logix controllers, revision 19 and later, on the EtherNet/IP network:

- The same motion profile provides a common configuration experience. The PowerFlex 755 drive uses the Motion Properties/Axis Properties and the same motion attributes as the Kinetix 6500 drive.
- The same motion instructions provide a common programming experience.

Refer to the Integrated Motion on EtherNet/IP appendix in the PowerFlex 750-Series Programming Manual, publication 750-PM001, for more information.

Motion Drive Start (MDS) Instruction

For information regarding the MDS instruction, refer to the Logix5000 Controllers Motion Instructions Reference Manual, publication MOTION-RM002.

For the PowerFlex 755 drive, the MDS instruction is valid only when the axis configuration is set to one of these control modes:

- Frequency Control
- Velocity Loop
- Torque Loop

The MDS instruction is not valid when the axis configuration is set to Position Loop.

Motion Drive Start Instruction Configuration

The MDS instruction is configured in a similar fashion to most motion instructions, as seen in this example.

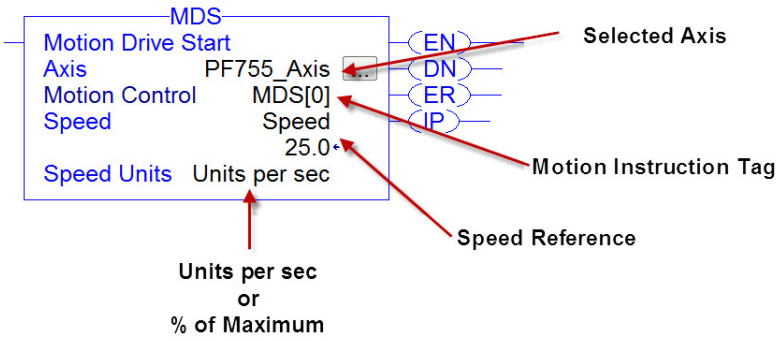

The MDS instruction is similar to a Motion Axis Jog (MAJ) instruction, however the MDS instruction does not set the acceleration/deceleration rates. The acceleration rate is dynamically set by the ramp attributes configured in a Set System Value (SSV) instruction. See Ramp Attributes on page 304. Note that PF755_Axis was configured for revolutions. Therefore, the speed units are revs/sec.

Motion Drive Start (MDS) Sample Code

Start

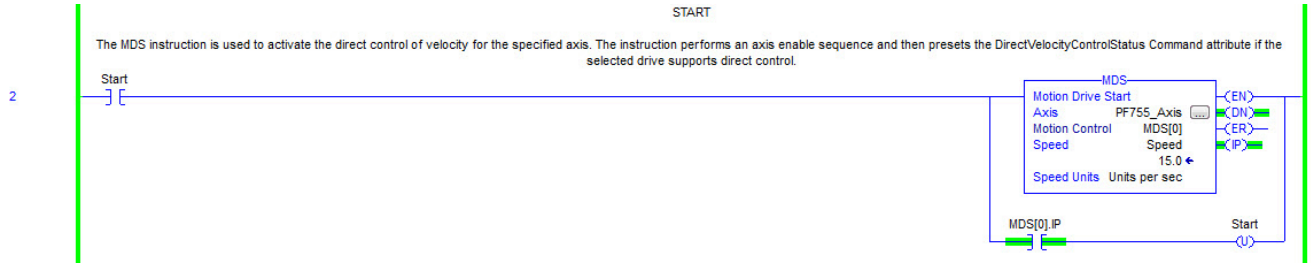

Increase Speed

The speed is changed by updating the speed reference and then re-executing the MDS instruction.

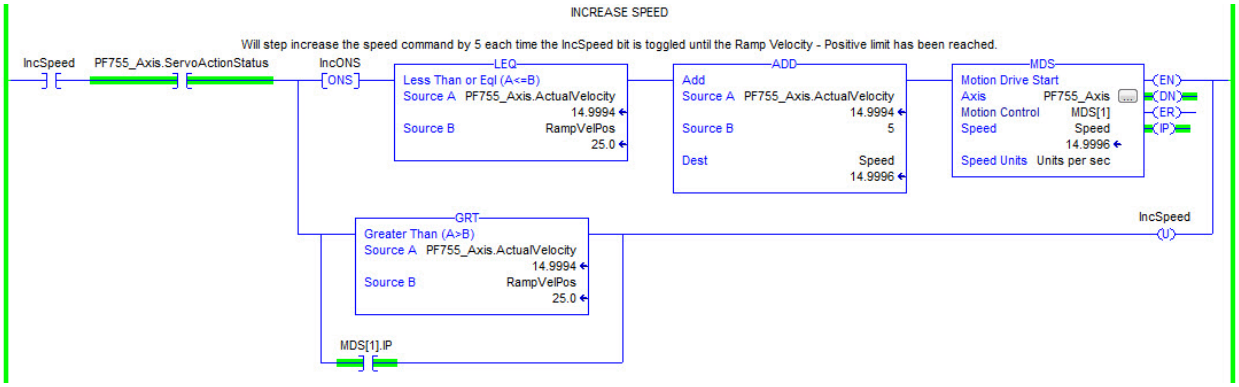

Decrease Speed

The speed is changed by updating the speed reference and then re-executing the MDS instruction.

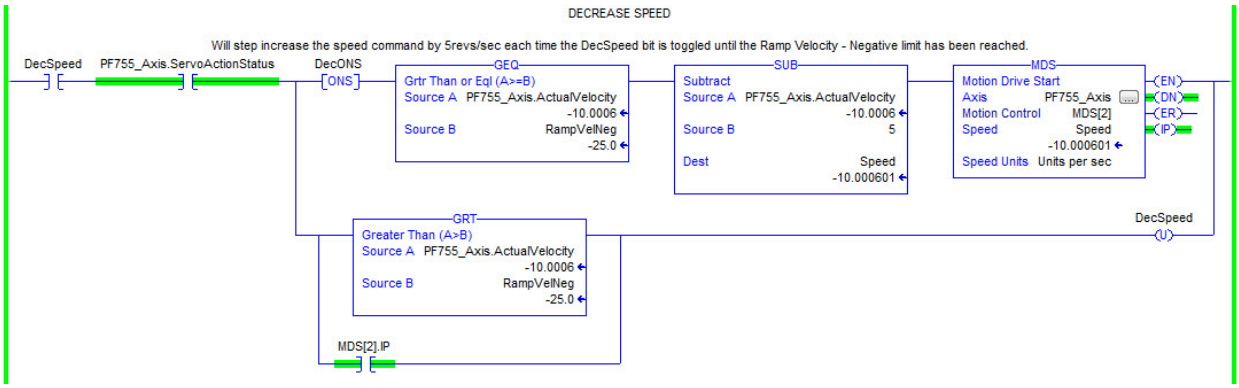

Torque Mode

When the axis configuration is in Torque Loop, the Speed attribute within the MDS instruction is not used to command the speed of the drive. The speed is determined by the amount of torque specified in the CommandTorque and/or TorqueTrim attributes.

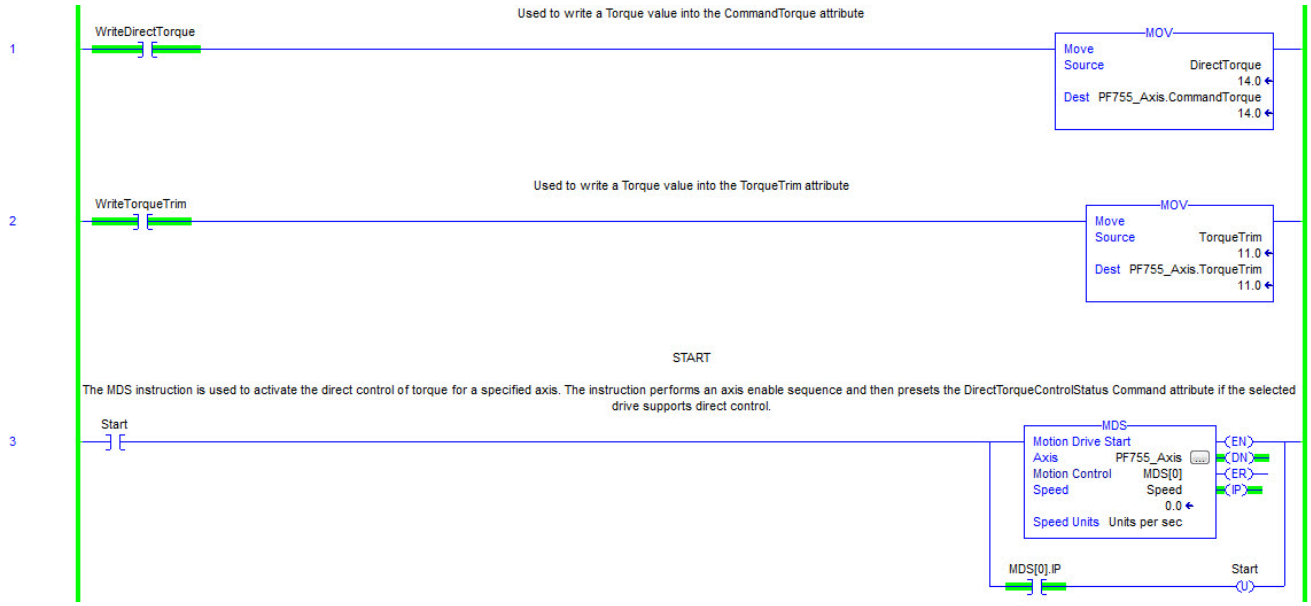

IMPORTANT You must command zero torque in the CommandTorque and TorqueTrim attributes before you use the Motion Axis Stop (MAS) instruction to stop a specific motion process on an axis or to stop the axis completely. To use the MAS instruction, you must set Change Decel to No. Otherwise an instruction error can occur. The deceleration rate is set based on the Ramp Deceleration attribute. The Motion Servo Off (MSF) instruction is used to deactivate the drive output for the specified axis and to deactivate the axis' servo loop. If you execute an MSF instruction while the axis is moving, the axis coasts to an uncontrolled stop.

Ramp Attributes

The MDS instruction is validated if the Integrated Motion on EtherNet/IP drive device supports the following five ramp attributes:

- RampAcceleration
- RampDeceleration
- RampVelocity - Positive
- RampVelocity - Negative
- RampJerk - Control

These ramp attributes are available only when the PowerFlex 755 drive axis configuration is set to Frequency Control or Velocity Loop. These ramp attributes are **not** available when the axis configuration is set to Torque Loop or Position Loop.

This table provides a cross reference between the PowerFlex 755 Integrated Motion on the EtherNet/IP Network Motion Ramp Attributes and the corresponding drive parameters.

Ramp Attribute	Drive Parameter
RampAcceleration	P535 [Accel Time 1]
RampDeceleration	P537 [Decel Time]
RampVelocity - Positive	P520 [Max Fwd Speed]
RampVelocity - Negative	P521 [Max Rev Speed]
RampJerk - Control	P540 [S Curve Accel] P541 [S Curve Decel]

Ramp Attribute Sample Code

The Ramp Attributes listed in the previous section are accessible via a Set System Value (SSV) instruction, as shown in this example:

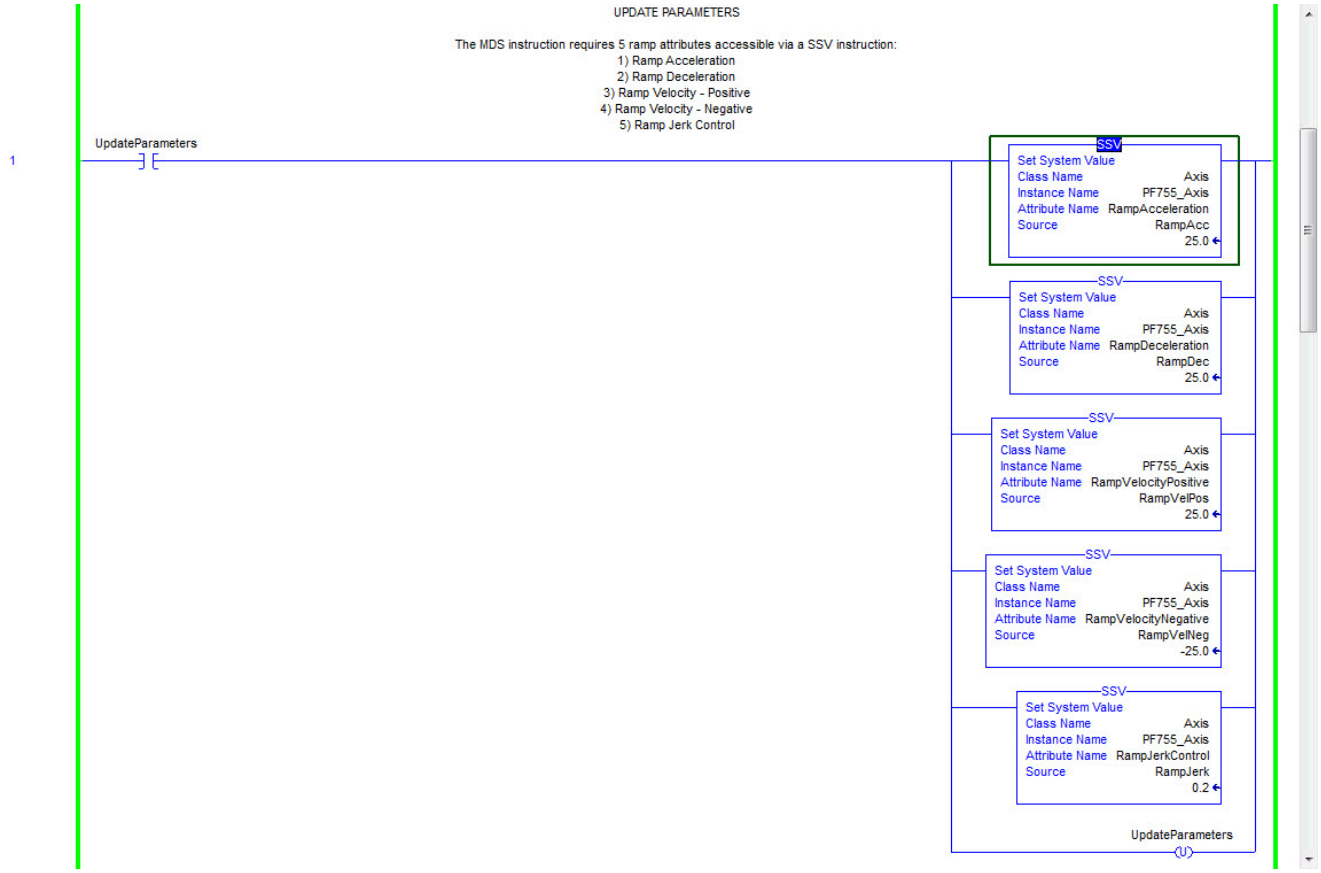

Position Mode, Velocity Mode, and Torque Mode Comparison

The PowerFlex 755 supports the following axis configurations:

- Frequency Control with No Feedback
- Position Loop with Motor Feedback, Dual Feedback or Dual Integral Feedback
- Velocity Loop with Motor Feedback or No Feedback
- Torque Loop with Motor Feedback

The selection options of the axis configuration within the Logix Designer application, Axis Properties, General tab are shown here.

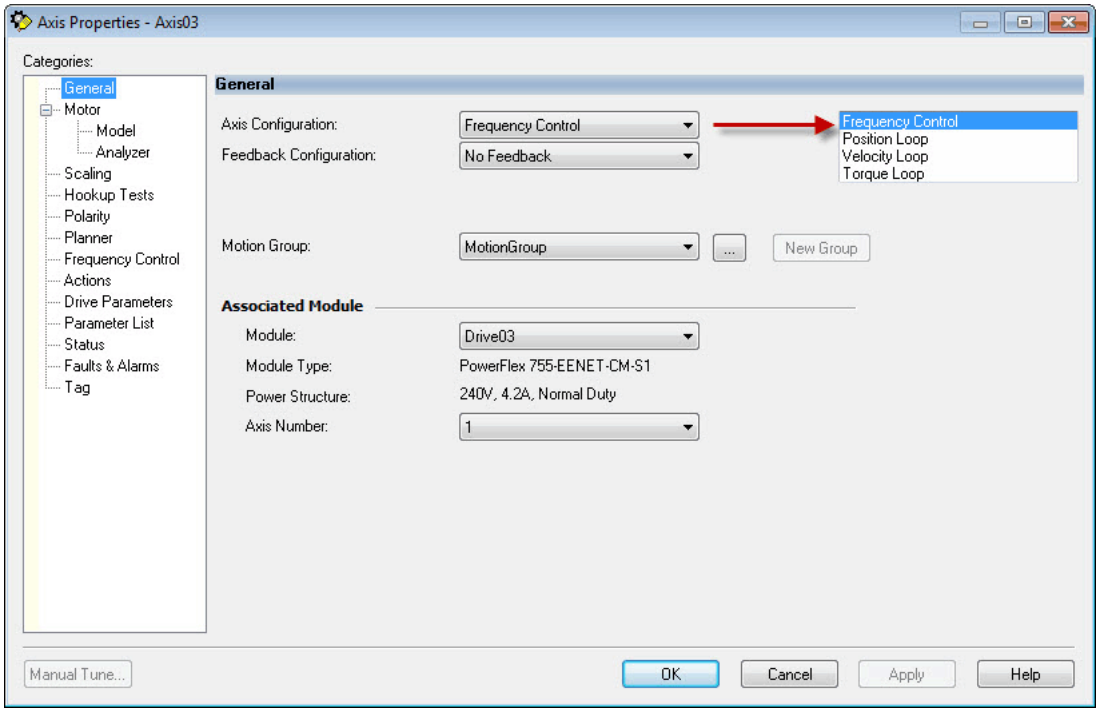

When the axis configuration is set to Frequency Control, you can select one of the following control methods that best suits the application:

- Basic Volts/Hertz
- Fan/Pump Volts/Hertz
- Sensorless Vector
- Induction FV

The selection options of the axis configuration within the Logix Designer application Axis Properties, Frequency Control tab are shown here.

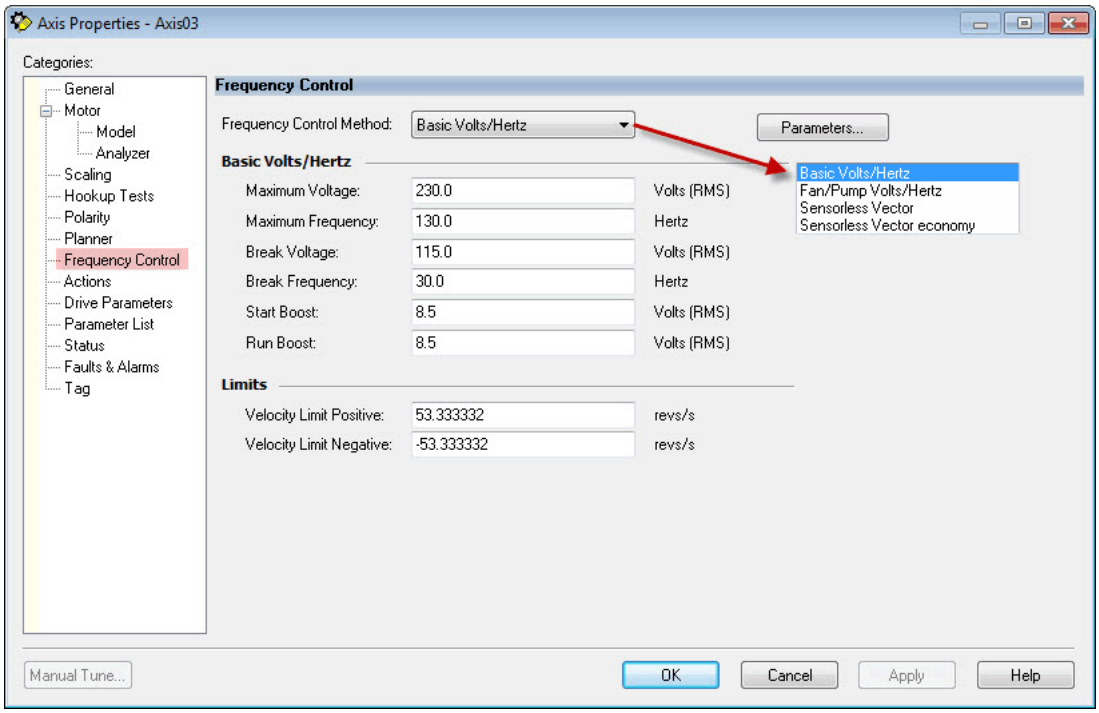

This table contains the possible axis configurations and corresponding control modes of the PowerFlex 755 drive on the Integrated Motion on the EtherNet/IP Network.

Axis Configuration	P35 [Motor Ctrl Mode]	P65 [VHz Curve]
Frequency Control:		
Basic Volts/Hertz	InductionVHz	Custom V/Hz
Fan/Pump Volts/Hertz	InductionVHz	Fan/Pump
Sensorless Vector	Induction SV	Custom V/Hz
Sensorless Vector economy	Induct Econ	Custom V/Hz
Position Loop	Induction FV	Custom V/Hz
Velocity Loop	Induction FV	Custom V/Hz
Torque Loop	Induction FV	Custom V/Hz

For more detailed examples on PowerFlex 755 axis configurations, refer to the Axis Configuration Examples for the PowerFlex 755 Drive chapter in the Integrated Motion on the Ethernet/IP Network Configuration and Startup User Manual, publication MOTION-UM003.

Frequency Only

For information on the specific Frequency Control details, see the Motion Instructions and Integrated Motion Control Modes appendix in the Logix5000 Controllers Motion Instructions Reference Manual, publication MOTION-RM002.

Drive Nonvolatile (NV) Memory for Permanent Magnet Motor Configuration

A Kinetix drive can automatically read configuration data in a permanent magnet motor/encoder's nonvolatile memory, whereas the motor/encoder configuration data must be manually entered and tuned in a PowerFlex 755 drive when configuring the drive and a permanent magnet motor for operation on the Integrated Motion on the EtherNet/IP Network.

The Drive NV option (shown in the screen example below) lets you start up a PowerFlex 755 drive and permanent magnet motor using the motor/encoder data that is entered and stored in the drive's nonvolatile memory. This is useful for a drive running in standalone mode that is being converted to operation on an Integrated Motion on the EtherNet/IP Network.

Use these settings to configure the drive module:

- Verify that the correct motor/encoder data is present in the drive.
- In the Axis Properties for the drive module, select the Motor category, and from the Data Source pull-down menu, choose Drive NV.
- Verify that the feedback selection in the appropriate drive parameter matches the selection in the Motor Feedback category for the axis.

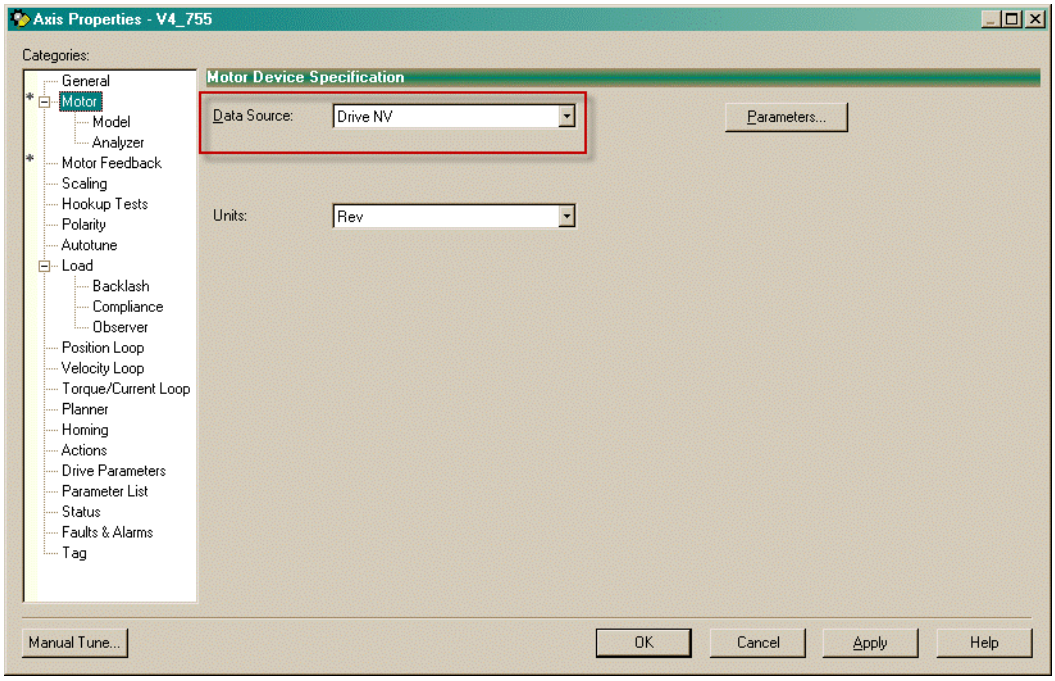

Dual Loop Control

This section explains how to configure a dual loop feedback application by using Integrated Motion on the EtherNet/IP Network for a PowerFlex 755 drive.

Dual Loop Application Description

A dual loop control application uses two encoders, one mounted on the motor (typical), and one mounted on the load (as depicted in this block diagram). The two encoders are connected to the PowerFlex 755 drive via separate feedback option modules, one installed in port 5, and another installed in port 4.

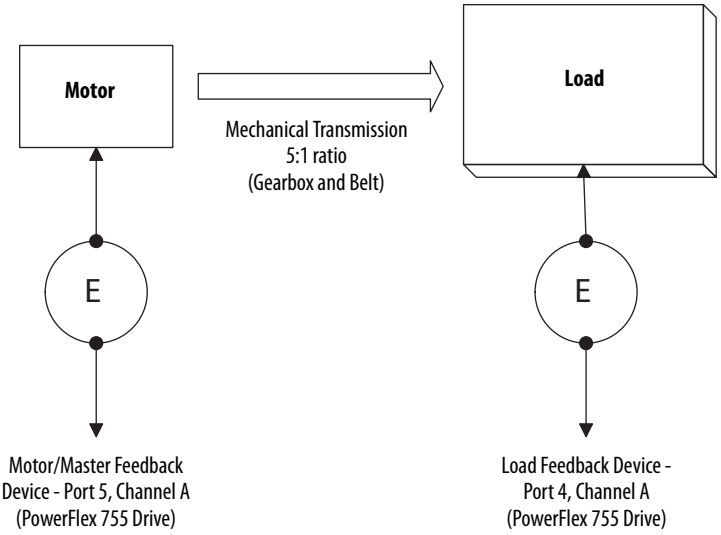

Dual Loop Control Configuration

These steps assume that you have created an axis for the PowerFlex 755 drive in the Motion group and added a new PowerFlex 755 drive module in the Logix Designer application. See the Integrated Motion on the EtherNet/IP Network Configuration and Startup User Manual, publication MOTION-UM003, for complete procedures. Follow these steps to configure the dual loop control (encoder) axis.

1. Create a feedback axis in the Motion group for the encoders (Dual_Loop_Axis in this example).

2. Open the PowerFlex 755 drive module and click the Associated Axis tab.
3. From the Axis 1 pull-down menu, choose the feedback axis you created (Dual_Loop_Axis in this example).
4. From the Motor/Master Feedback Device pull-down menu, choose Port 5 Channel A.
5. From the Load Feedback Device pull-down menu, choose Port 4 Channel A.
6. Click OK.

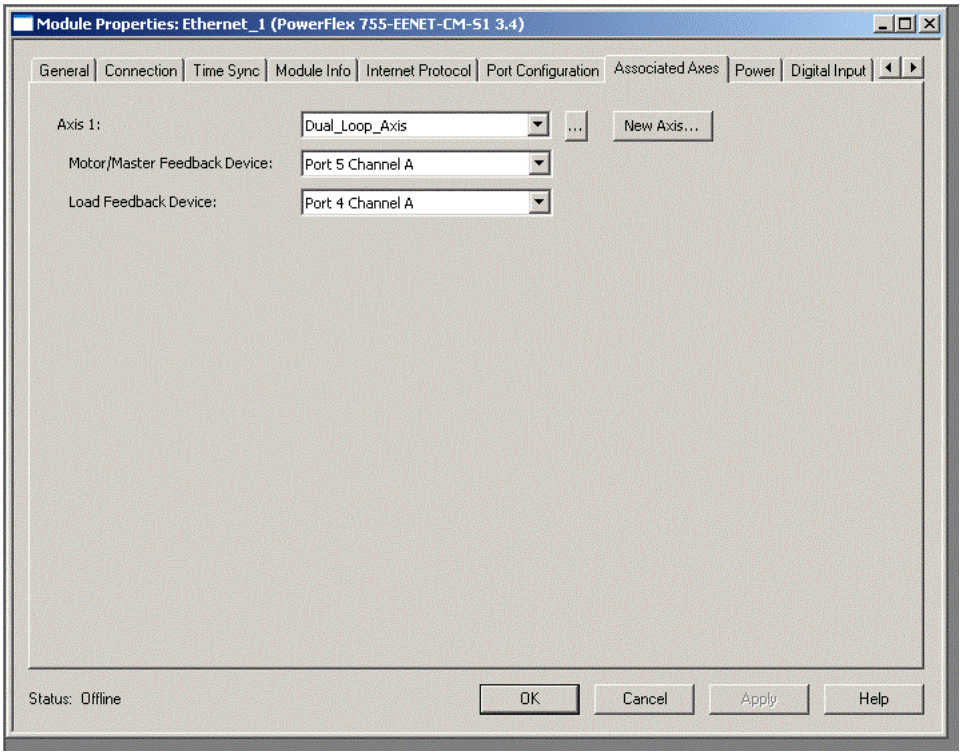

7. Open the Axis Properties for the feedback axis (Dual_Loop_Axis).
8. From the Feedback Configuration pull-down menu, choose Dual Feedback to allow the axis object to accept feedback from two sources.

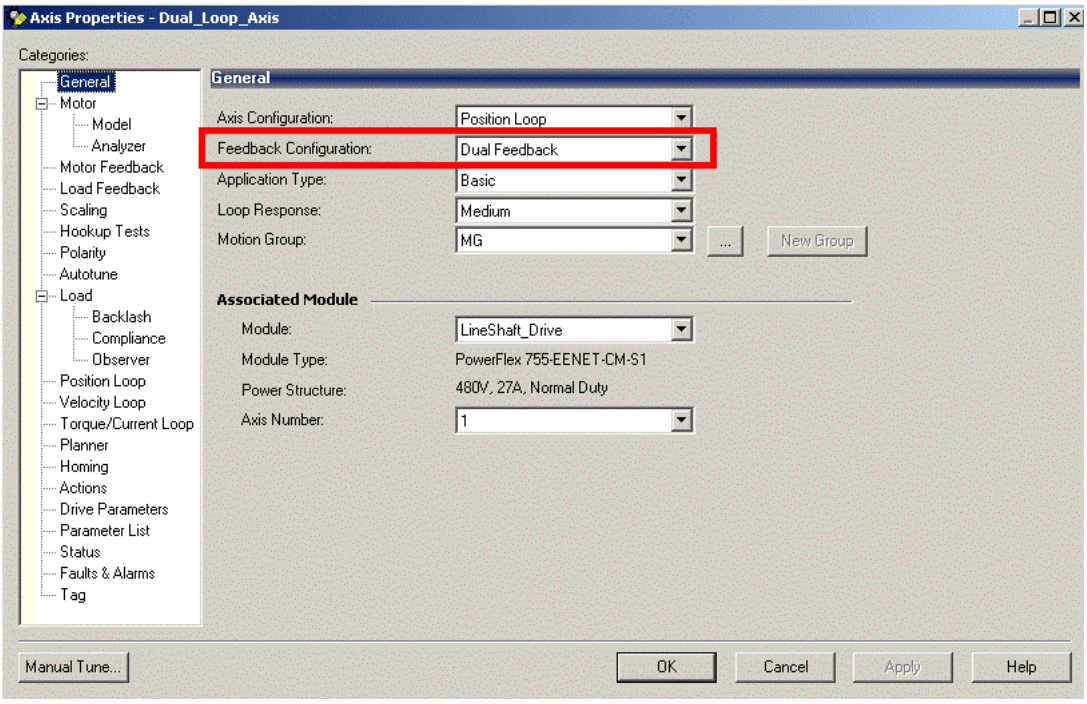

9. Select the Motor Feedback category.
10. From the Type pull-down menu, choose the appropriate motor feedback.
11. In the Cycle Resolution box, type the appropriate value for your device.
12. From the Startup Method pull-down menu, choose the appropriate value for your device.

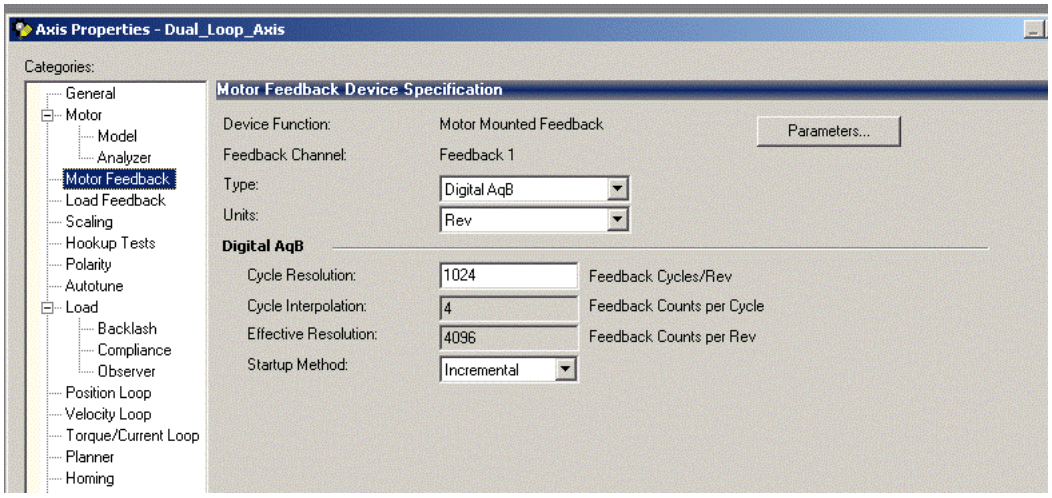

13. Select the Load Feedback category.
14. From the Type pull-down menu, choose the appropriate load feedback device.
15. From the Units pull-down menu, choose the appropriate value.
16. In the Cycle Resolution box, type the appropriate value for your device.
17. From the Startup Method pull-down menu, choose the appropriate value for your device.
18. In the Turns box, type the appropriate value for your device.

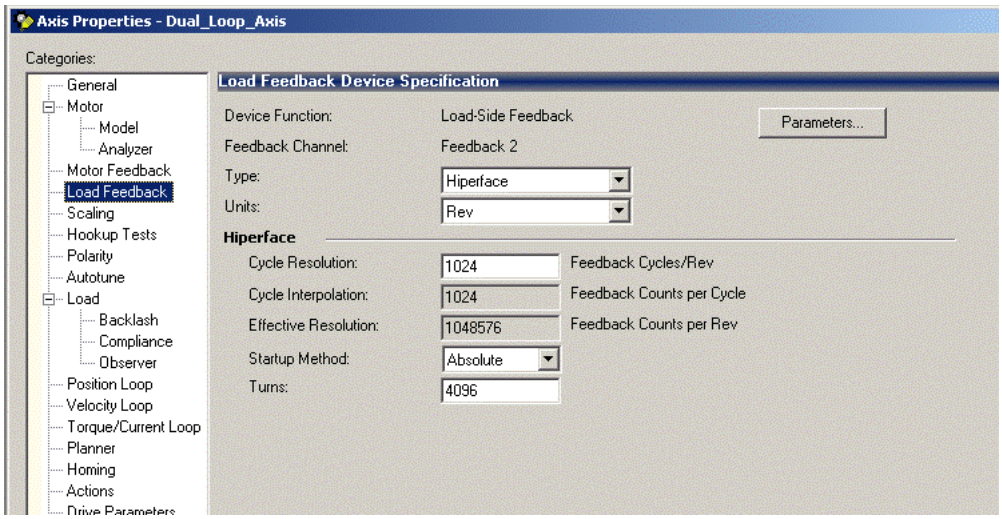

19. Select the Scaling category.
20. From the Load Type pull-down menu, choose the appropriate value for your device.

    This example uses a Rotary Transmission.
21. In the Transmission Ratio boxes, type the appropriate values for your device.

    This example uses a ratio of 5:1.
22. In the Scaling Units box, type the appropriate value for your device.
23. In the Scaling Position Units box, type the appropriate value for your device.

    This example uses 30 position units for every 1.0 load encoder revolution on a rotary axis (for example a dial), that unwinds to zero position after 90 units accumulate.

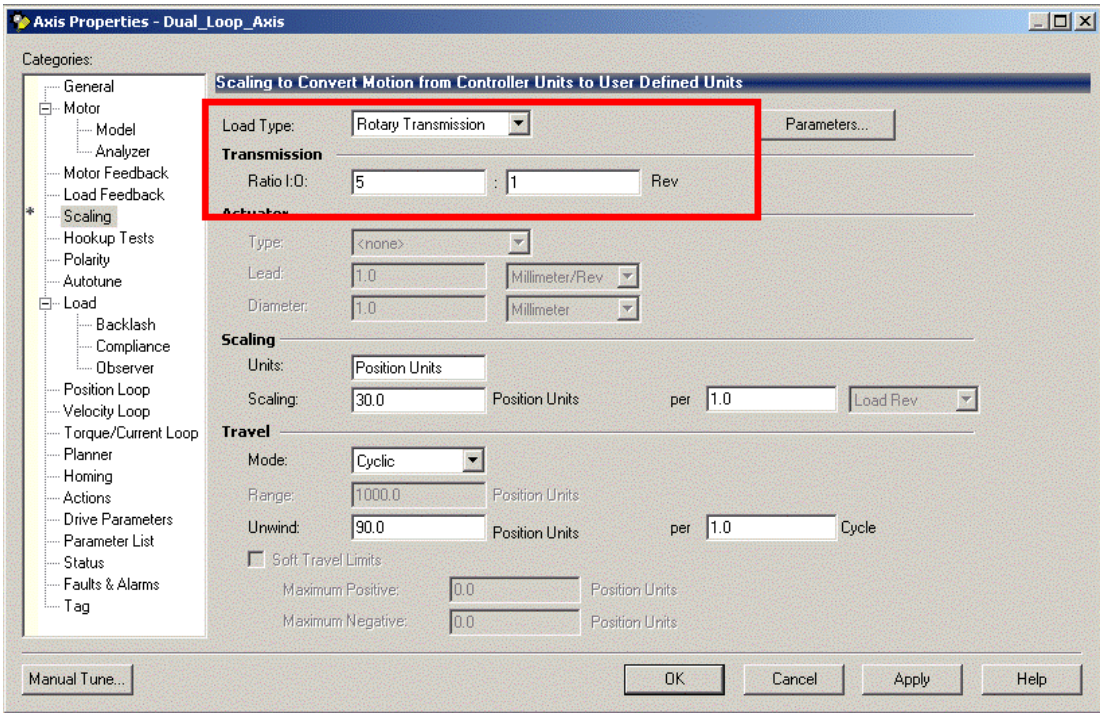

The velocity loop is controlled by the motor encoder feedback. Because a mechanical transmission exists between the motor and load side, the scaling units are potentially different between the two encoders.

24. To verify that the Motor to Load ratio is correct, select the Parameter List category.
25. View the value of the FeedbackUnitRatio parameter. In this example the ratio is 5:1, or 5 motor encoder revolutions to per load encoder revolution.

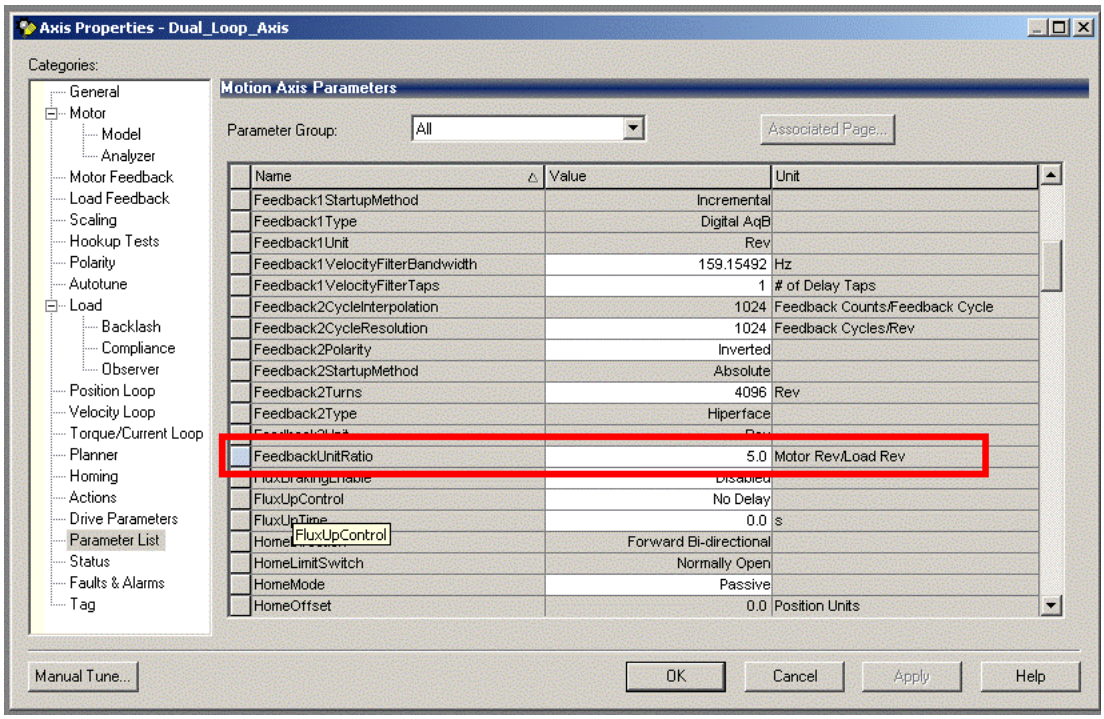

If the velocity loop is not performing well, that is, not following the command and not accelerating or decelerating properly, verify that this ratio is correct.

26. Continue by tuning this axis.

Dual-Port EtherNet/IP Option Module (ETAP)

The Dual-Port EtherNet/IP option module has two modes of operation, Adapter mode (default) and Tap mode.

Operation Mode Selection

The Tap mode is intended for use with PowerFlex 755 drives and uses the ENET3 (DEVICE) port as a connection point to transfer Integrated Motion on the EtherNet/IP Network data to the PowerFlex 755 drive's embedded EtherNet/IP adapter. The operation mode is selected by using the Operating Mode jumper (J4). For more information about setting the Operating Mode jumper, see the PowerFlex 20-750-ENETR Dual-Port EtherNet/IP Option Module User Manual, publication 750COM-UM008.

IP Address Assignment

If the PowerFlex 755 drive is connected to a Stratix 6000™ or Stratix 8000 managed Ethernet switch and the drive is set for BOOTP mode, the "dynamic IP address assignment by port" (Stratix 6000) or "DHCP persistence" (Stratix 8000) feature sets the IP address for the drive. For more details, see the Stratix 6000 Ethernet Managed Switch User Manual, publication 1783-UM001, or the Stratix 8000 and Stratix 8300™ Ethernet Managed Switches User Manual, publication 1783-UM003.

Option Module Placement

Install the Dual-Port EtherNet/IP option module in Port 4 or 5 of the PowerFlex 755 drive control pod. (When operating in Tap mode, drive Port 6 cannot be used.)

Hardware Over Travel Considerations

When a PowerFlex 755 drive is configured for Integrated Motion on the EtherNet/IP Network none of the I/O option modules are supported. Therefore, inputs associated with over-travel limits must be wired into controller input modules and then control must be programmed in the Logix Controller.

Operation of this control is accomplished by programming the controller to monitor the over travel limits via digital inputs and setting the desired action when over travel limits are exceeded. Possible actions include (but not limited to), setting an alarm, stopping the motion planner, stopping the drive, or performing a shutdown function.

The sample ladder logic code below depicts a possible solution for performing hardware over travel control (the code is an example only and is not the only solution for monitoring hardware over travel limits). Each individual application determines the requirements for the necessary hardware over travel control. This example monitors digital inputs and issues a motion axis stop if either input goes false and generates an output indicator that could be used to annunciate the stop.

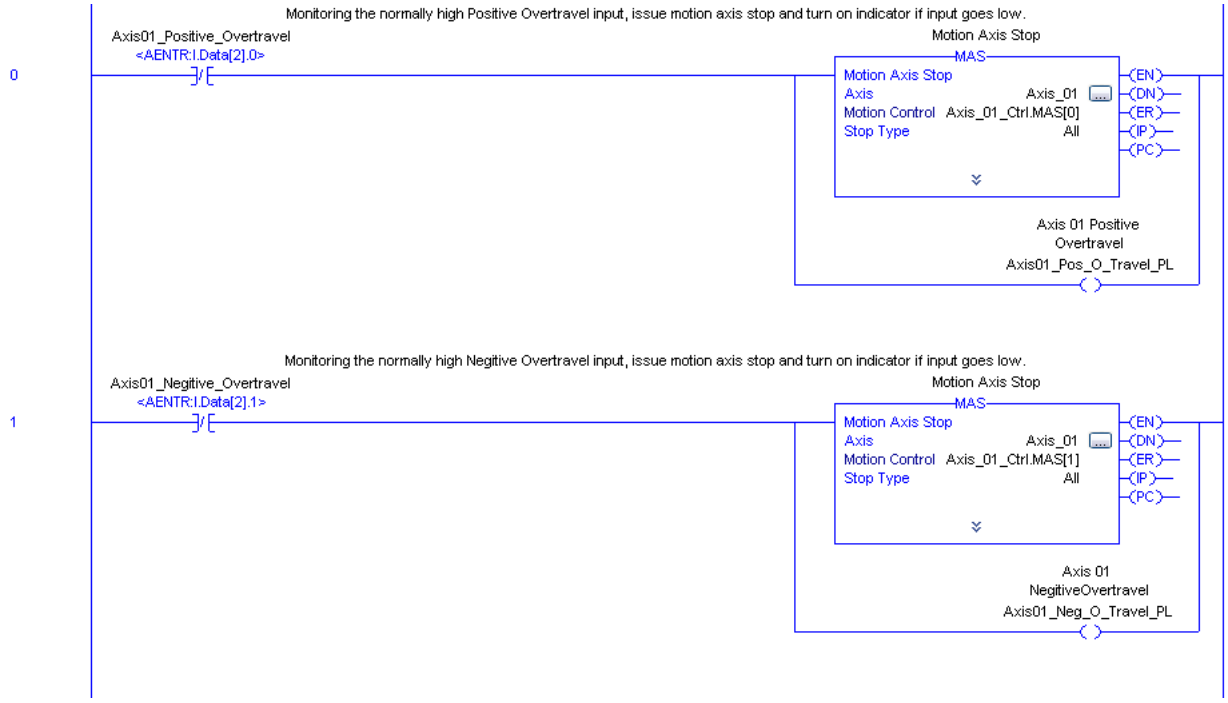

Integrated Motion on EtherNet/IP Instance to PowerFlex 755 Drive Parameter Cross-Reference

This section cross-references the Logix Designer Module Properties and Axis Properties instance to the corresponding PowerFlex 755 drive parameter. See the PowerFlex 755 Standard and Safety Drive Module Optional Attributes appendix in this manual for details on optional attributes and the corresponding control mode functionality supported by a PowerFlex 755 drive module.

Frequency Control Axis Properties Configuration

General Axis Properties for Frequency Control

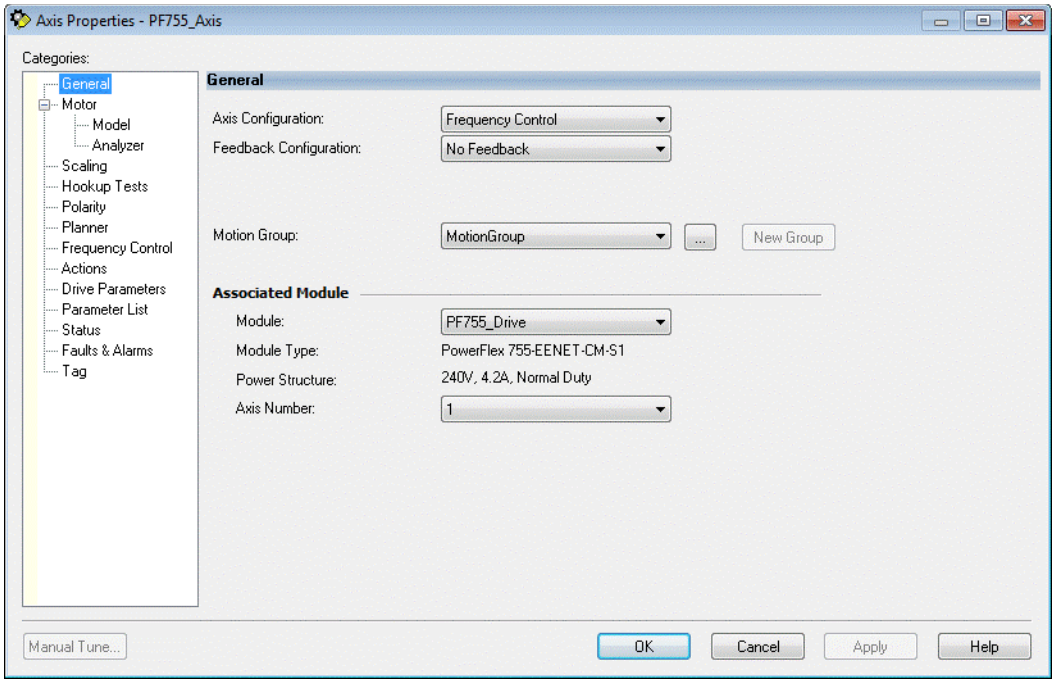

Frequency Control Axis Properties

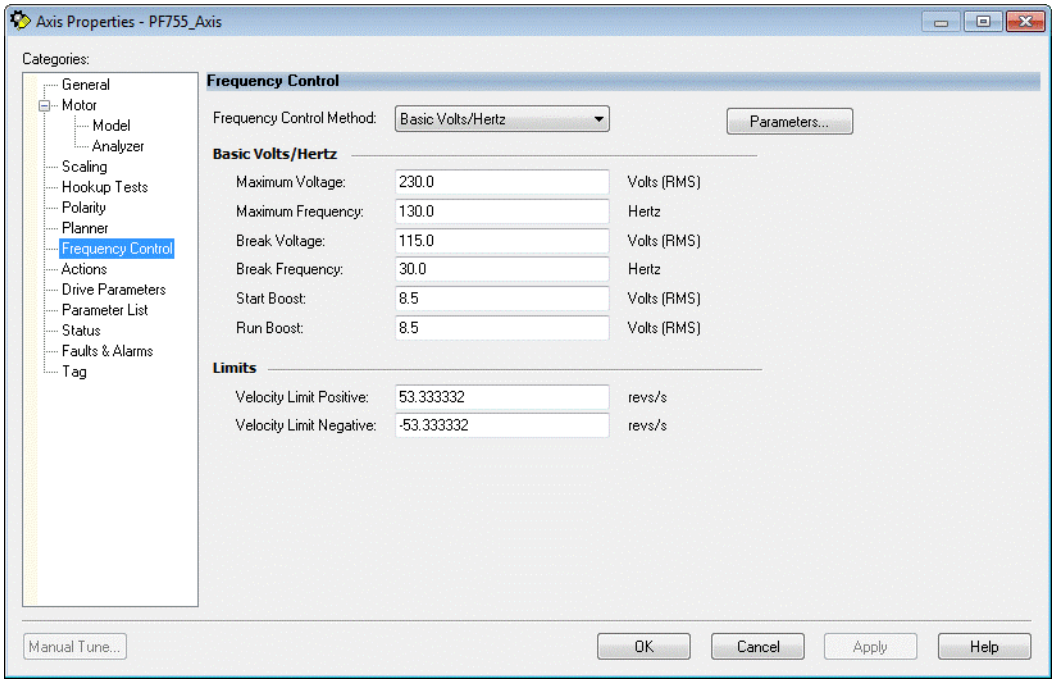

Frequency Control Motion Axis Parameters

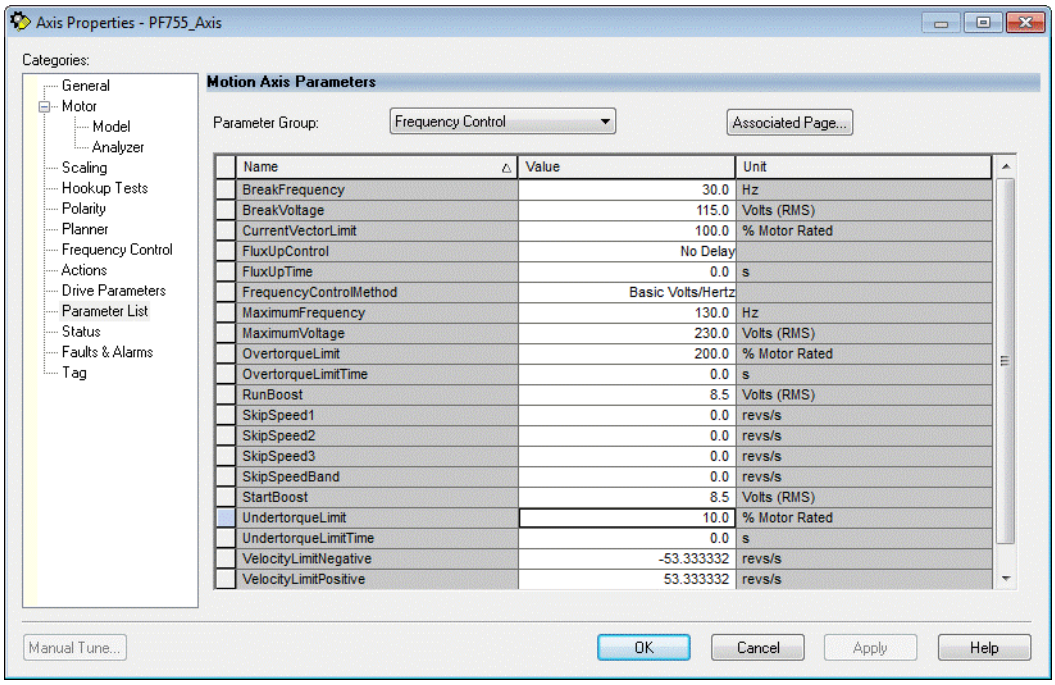

Table 13 - Frequency Control Instance to Parameter Cross Reference

Integrated Motion on EtherNet/IP Instance	Drive Parameter
Break Frequency	P63 [Break Frequency]
Break Voltage	P62 [Break Voltage]
Current Vector Limit	P422 [Current Limit 1]
Flux Up Control	P43 [Flux Up Enable] – Forced to Automatic
Flux Up Time	P44 [Flux Up Time]
Frequency Control Method	P65 [VHz Curve]
Maximum Frequency	P37 [Maximum Freq]
Overtorque Limit	P436 [Shear Pin1 Level]
Overtorque Limit Time	P437 [Shear Pin 1 Time]
Run Boost	P61 [Run Boost]
Skip Speed 1	P526 [Skip Speed 1]
Skip Speed 2	P527 [Skip Speed 2]
Skip Speed 3	P528 [Skip Speed 3]
Skip Speed Band	P529 [Skip Speed Band]
Start Boost	P60 [Start Acc Boost]
Undertorque Limit	P442 [Load Loss Level]
Undertorque Limit Time	P443 [Load Loss Time]
Velocity Droop	P620 [Droop RPM at FLA]
Velocity Limit Negative	P521 [Max Rev Speed]
Velocity Limit Positive	P520 [Max Fwd Speed]

Velocity Control Axis Properties Configuration

General Axis Properties for Velocity Control

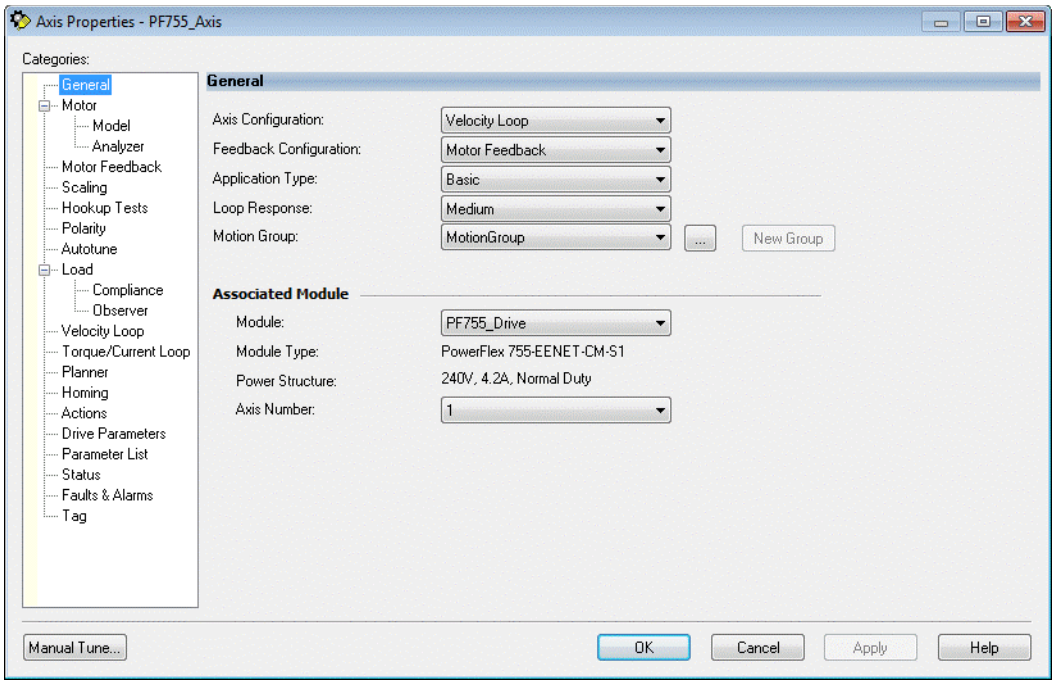

Velocity Control Axis Properties

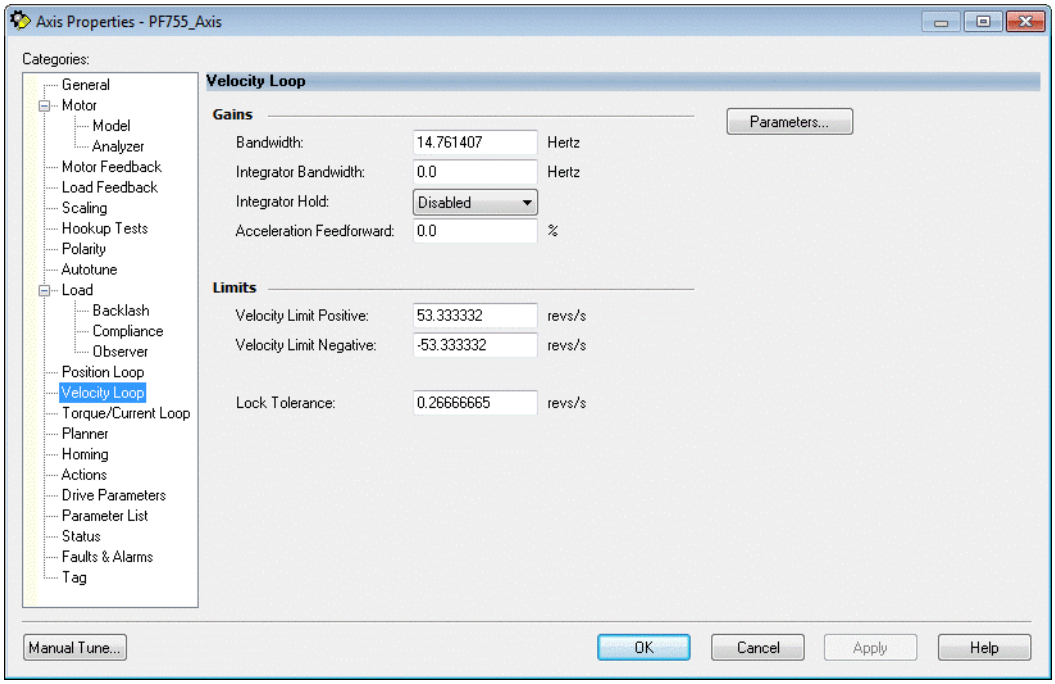

Velocity Control Motion Axis Parameters

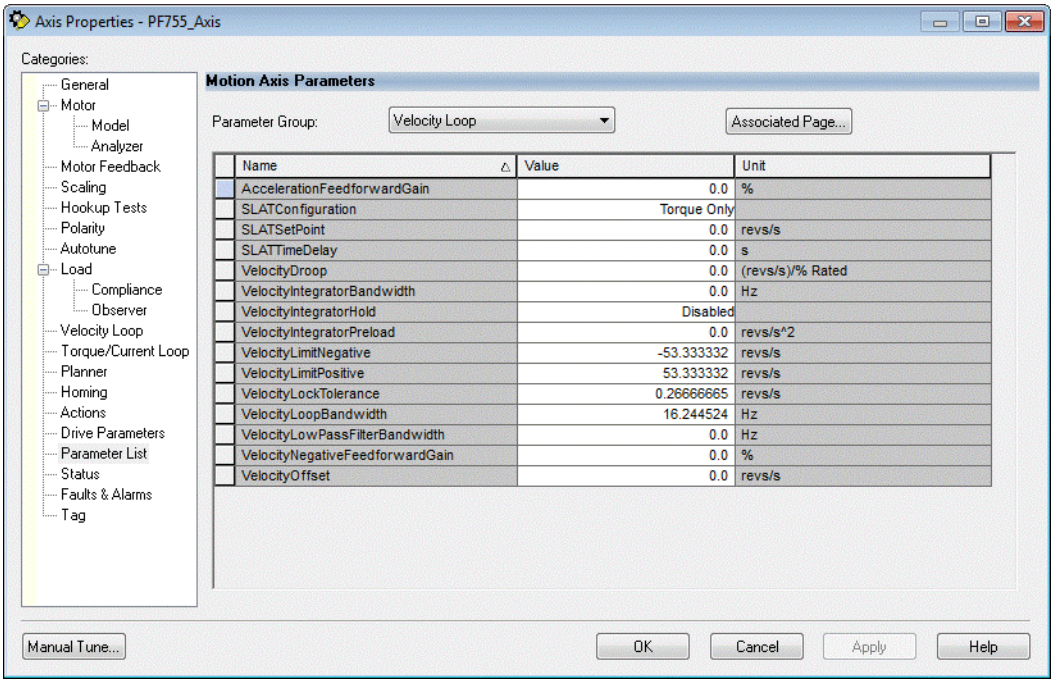

Table 14 - Velocity Control Instance to Parameter Cross Reference

Integrated Motion on EtherNet/IP Instance	Drive Parameter
Acceleration Feed Forward Gain	P696 [Inertia Acc Gain] P697 [Inertia Dec Gain]
SLAT Configuration	P309 [SpdTrqPsn Mode A]
SLAT Set Point	P314 [SLAT Err Stpt]
SLAT Time Delay	P315 [SLAT Dwell Time]
Velocity Droop	P620 [Droop RPM at FLA]
Velocity Integrator Bandwidth	P647 [Speed Reg Ki]
Velocity Integrator Hold	P635 [Spd Options Ctrl]
Velocity Integrator Preload	P652 [SReg Trq Preset]
Velocity Limit Negative	P521 [Max Rev Speed]
Velocity Limit Positive	P520 [Max Fwd Speed]
Velocity Loop Bandwidth	P645 [Speed Reg Kp]
Velocity Low Pass Filter Bandwidth	P644 [Spd Err Fltr BW]
Velocity Negative Feed Forward Gain	P643 [SpdReg AntiBckup]
Velocity Offset	P601 [Trim Ref A Stpt]

Torque Loop Axis Properties Configuration

General Axis Properties for Torque Loop

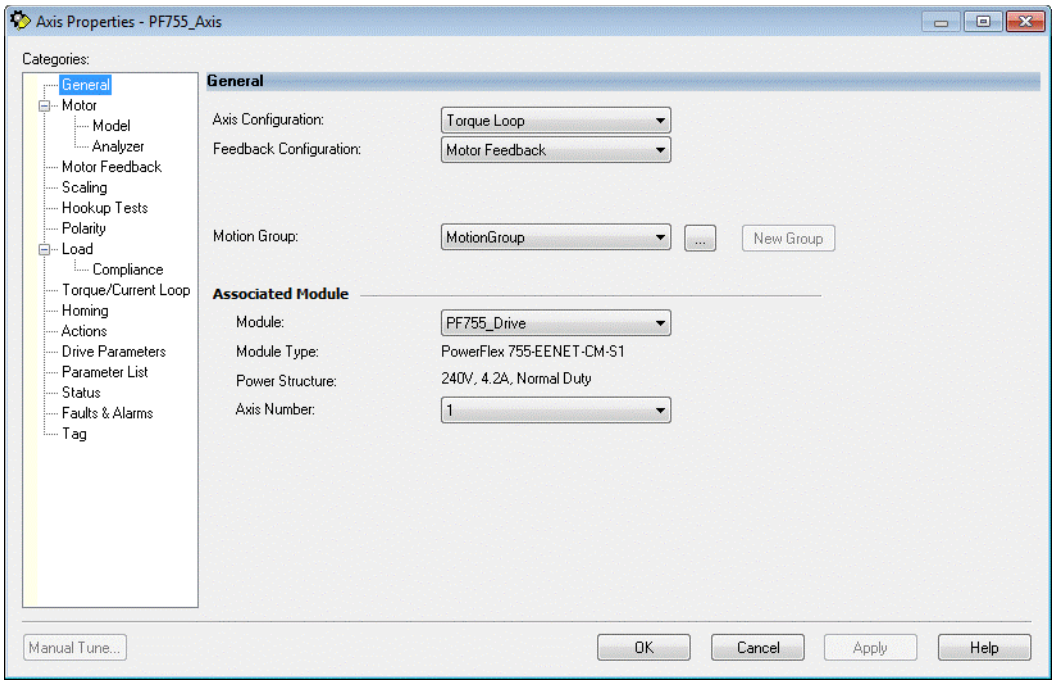

Torque Loop Axis Properties

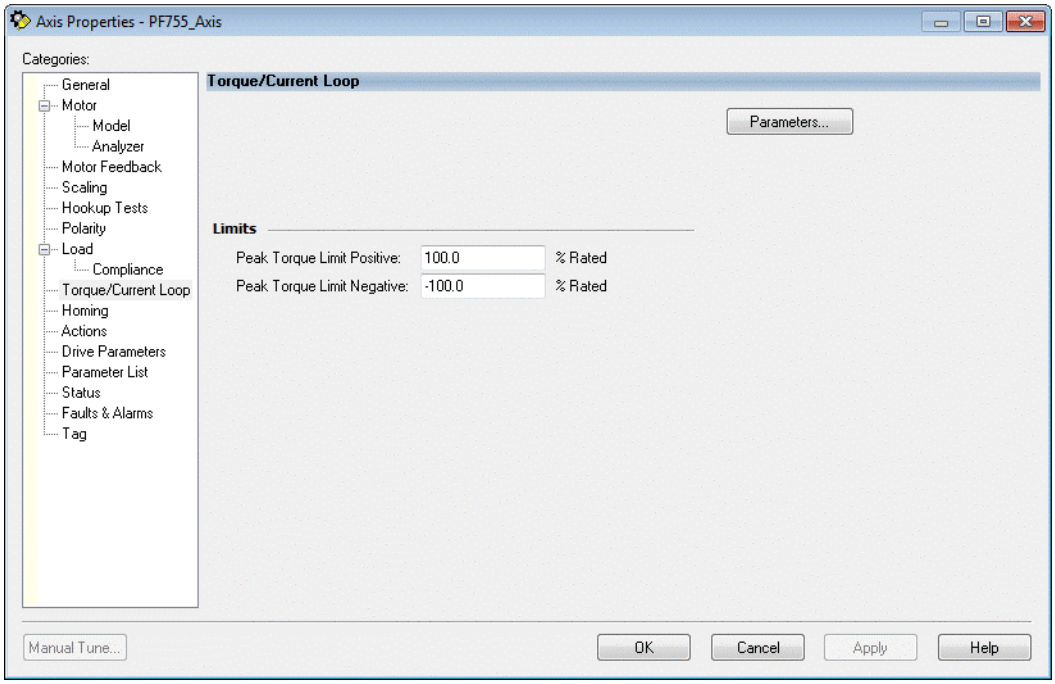

Torque Loop Motion Axis Parameters

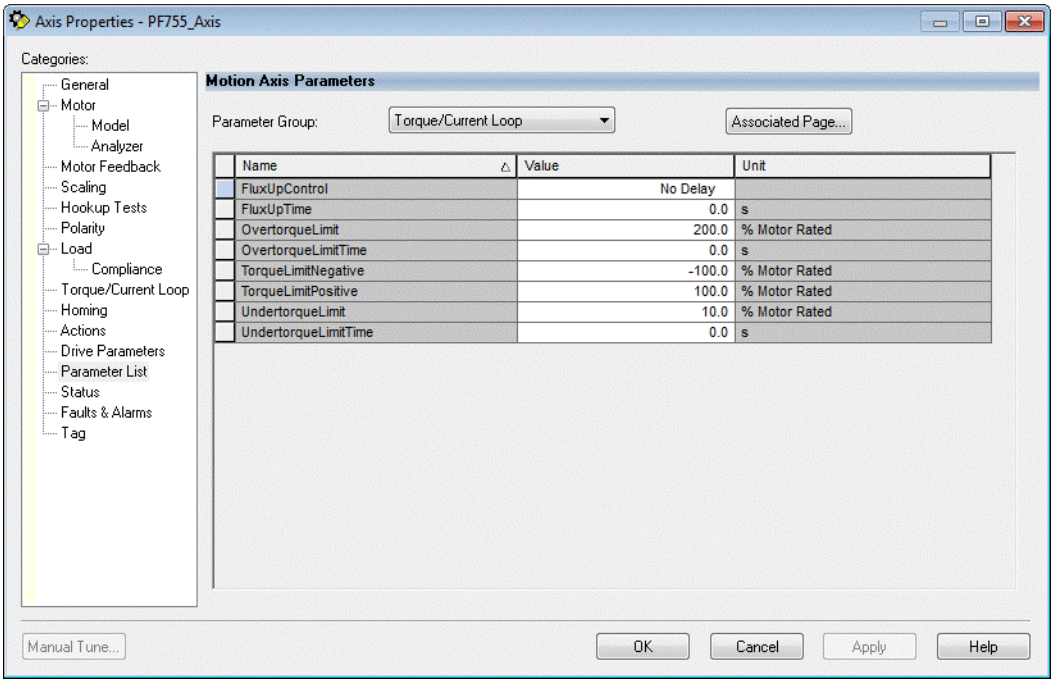

Table 15 - Torque Loop Instance to Parameter Cross Reference

Integrated Motion on EtherNet/IP Instance	Drive Parameter
Flux Up Control	P43 [Flux Up Enable] – Forced to Automatic
Flux Up Time	P44 [Flux Up Time]
Overtorque Limit	P436 [Shear Pin1 Level]
Overtorque Limit Time	P437 [Shear Pin 1 Time]
Torque Limit Negative	P671 [Neg Torque Limit]
Torque Limit Positive	P670 [Pos Torque Limit]
Undertorque Limit	P442 [Load Loss Level]
Undertorque Limit Time	P443 [Load Loss Time]

Position Loop Axis Properties Configuration

General Axis Properties for Position Loop

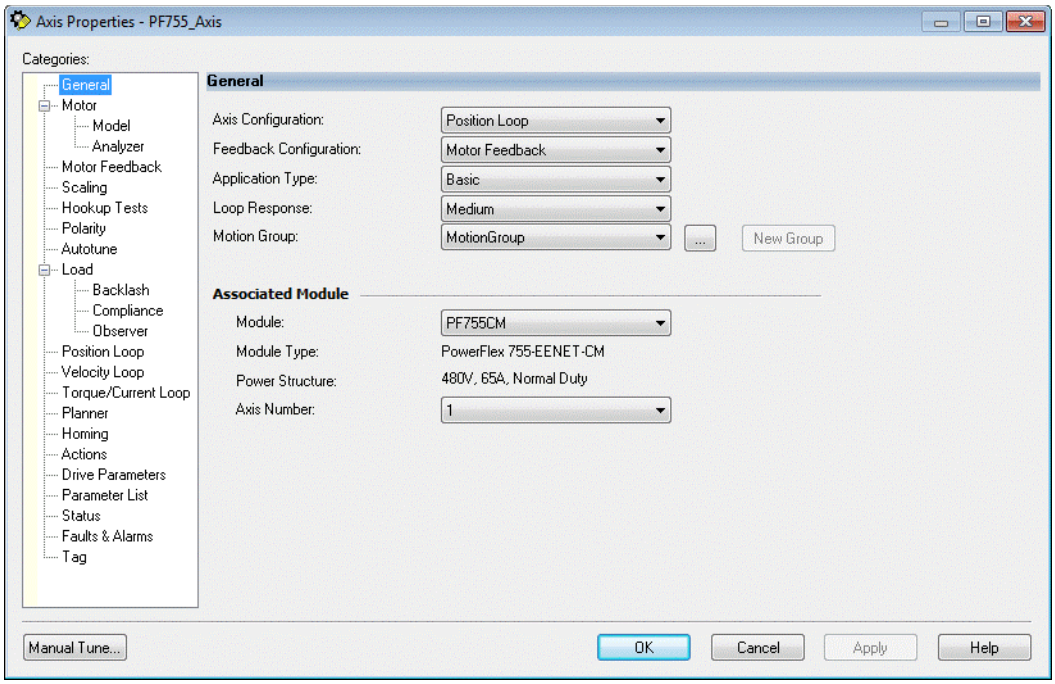

Position Loop Axis Properties

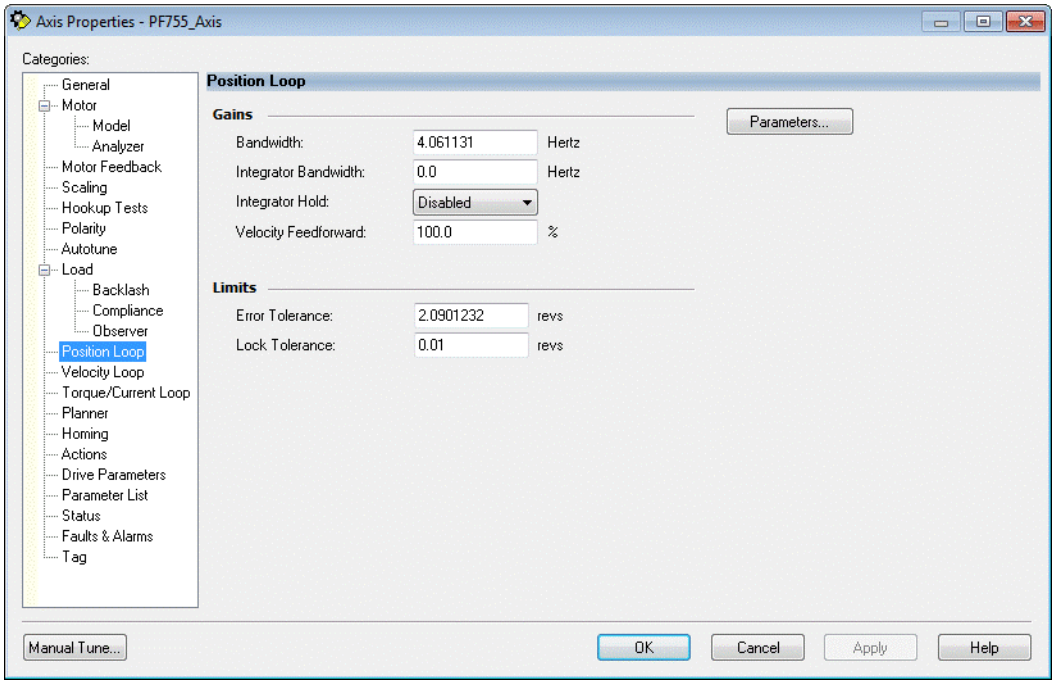

Position Loop Motion Axis Parameters

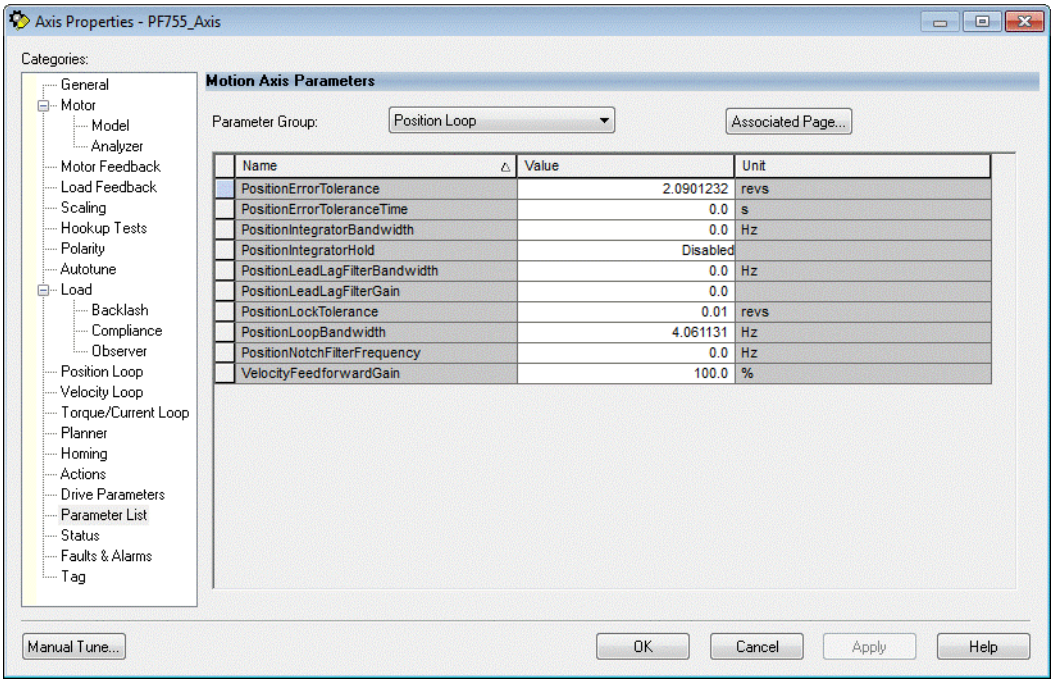

Table 16 - Position Loop Instance to Parameter Cross Reference

Integrated Motion on EtherNet/IP Instance	Drive Parameter
Position Integrator Bandwidth	P838 [Psn Reg Ki]
Position Integrator Hold	P721 [Position Control]
Position Lead Lag Filter Bandwidth	P834 [Psn Out Fltr BW]
Position Lead Lag Filter Gain	P833 [Psn Out FltrGain]
Position Loop Bandwidth	P839 [Psn Reg Kp]
Position Notch Filter Frequency	P830 [PsnNtchFltrFreq]
Velocity Feed Forward Gain	P549 [Spd Ref A Mult]

Induction Motor Data Axis Properties Configuration

Induction Motor Data Axis Properties

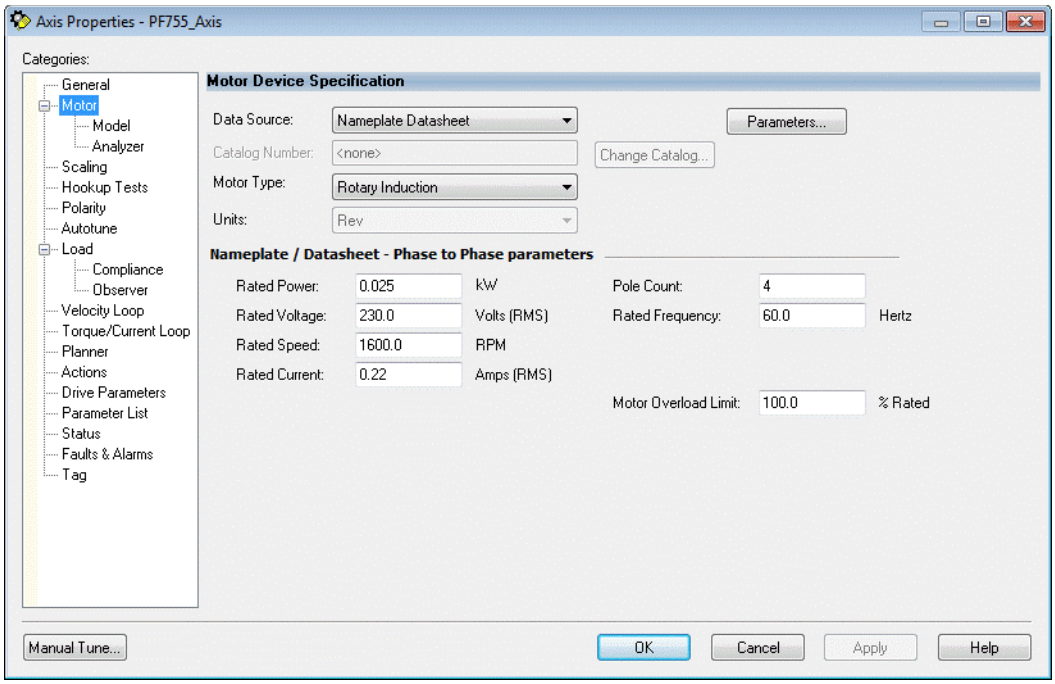

Induction Motor Data Motion Axis Parameters

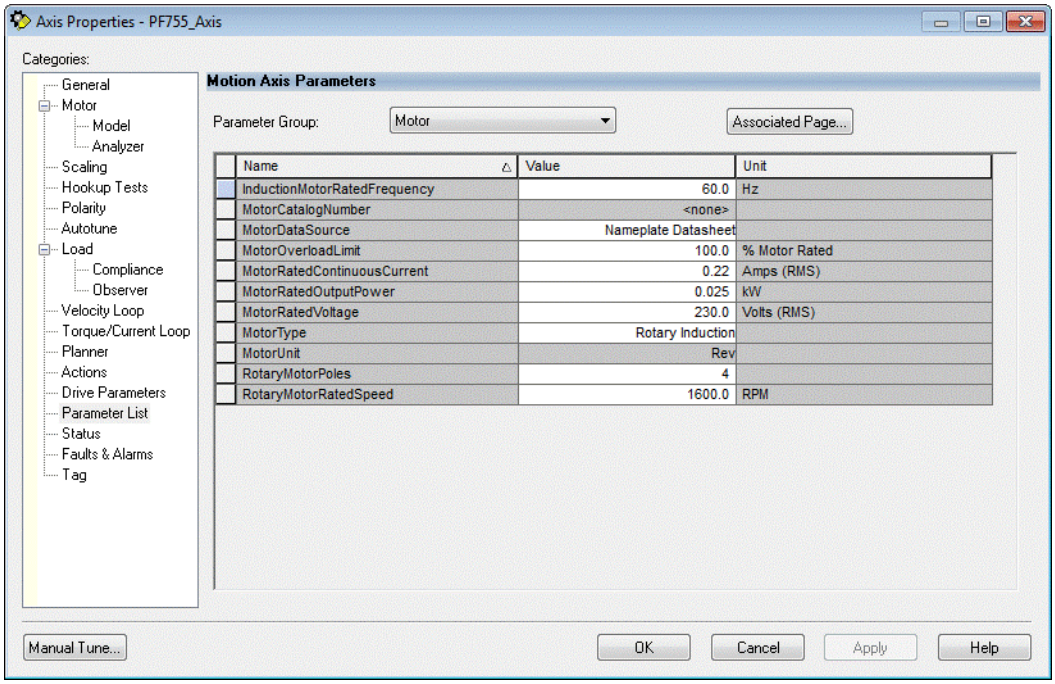

Table 17 - Induction Motor Data Instance to Parameter Cross Reference

Integrated Motion on EtherNet/IP Instance	Drive Parameter
Induction Motor Rated Frequency	P27 [Motor NP Hertz]
Motor Overload Limit	P413 [Mtr OL Factor]
Motor Rated Continuous Current	P26 [Motor NP Amps]
Motor Rated Output Power	P30 [Motor NP Power]
Motor Rated Voltage	P25 [Motor NP Volts]
Motor Type	P35 [Motor Cntl Mode]
Rotary Motor Poles	P31 [Motor Poles]
Rotary Motor Rated Speed	P28 [Motor NP RPM]

Induction Motor Model Axis Properties Configuration

Induction Motor Model Motion Axis Parameters

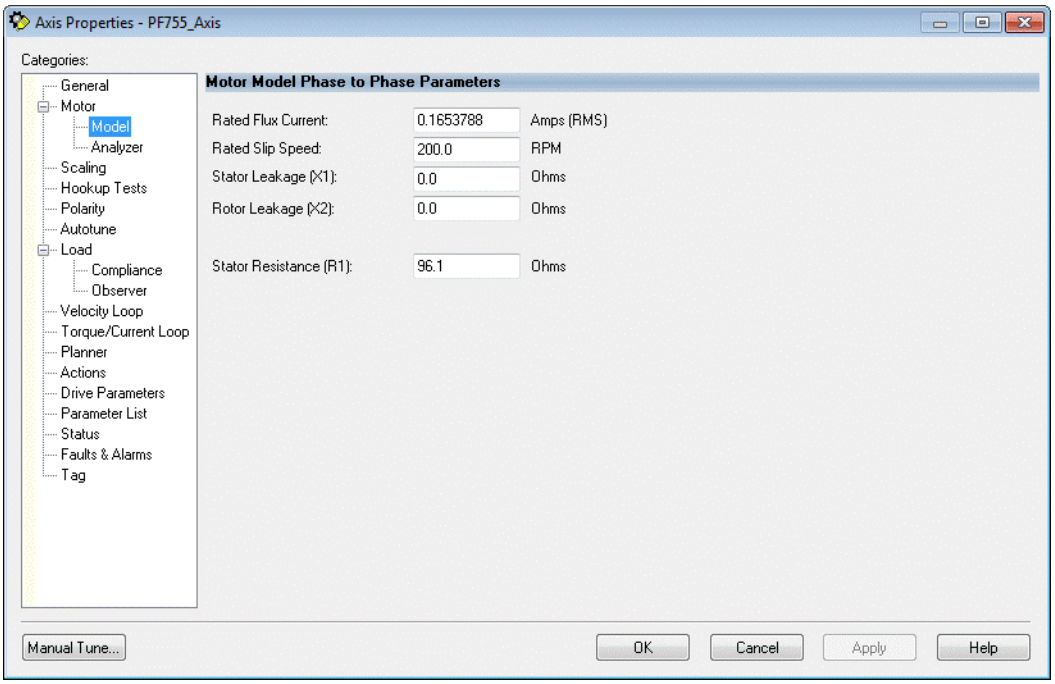

Table 18 - Induction Motor Model Instance to Parameter Cross Reference

Integrated Motion on EtherNet/IP Instance	Drive Parameter
Induction Motor Flux Current	P75 [Flux Current Ref]
Induction Motor Rated Slip Speed	P621 [Slip RPM at FLA]
Induction Motor Stator Leakage Resistance	P74 [Ixo Voltage Drop]
Induction Motor Rotor Leakage Resistance	P74 [Ixo Voltage Drop]
Induction Motor Stator Resistance	P73 [IR Voltage Drop]

Permanent Magnet Motor Data Axis Properties Configuration

Permanent Magnet Motor Data Axis Properties

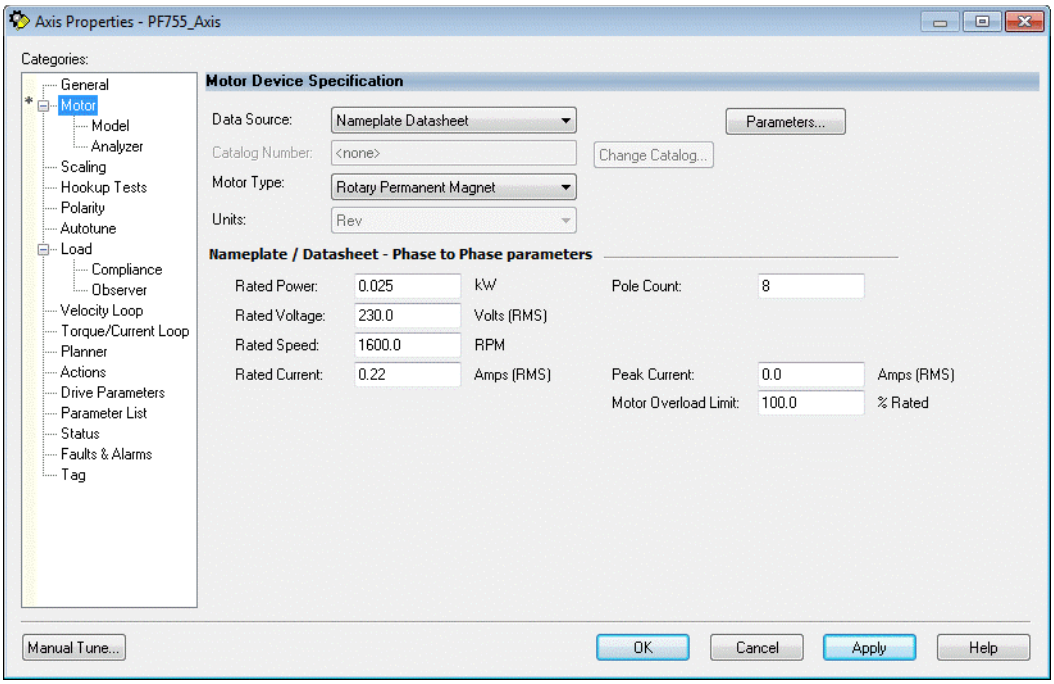

Permanent Magnet Motor Data Motion Axis Parameters

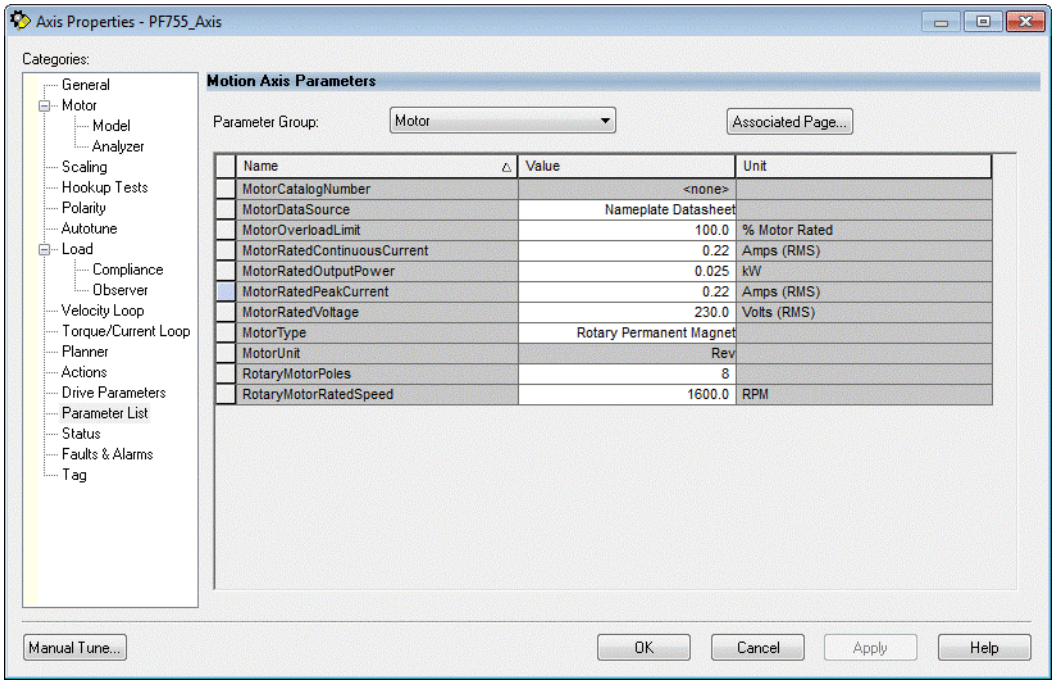

Table 19 - Permanent Magnet Motor Data Instance to Parameter Cross Reference

Integrated Motion on EtherNet/IP Instance	Drive Parameter
Motor Overload Limit	P413 [Mtr OL Factor]
Motor Rated Continuous Current	P26 [Motor NP Amps]
Motor Rated Output Power	P30 [Motor NP Power]
Motor Rated Peak Current	P422 [Current Limit 1]
Motor Rated Voltage	P25 [Motor NP Volts]
Motor Type	P35 [Motor Cntl Mode]
Rotary Motor Poles	P31 [Motor Poles]
Rotary Motor Rated Speed	P28 [Motor NP RPM]

Permanent Magnet Motor Model Motion Axis Parameters

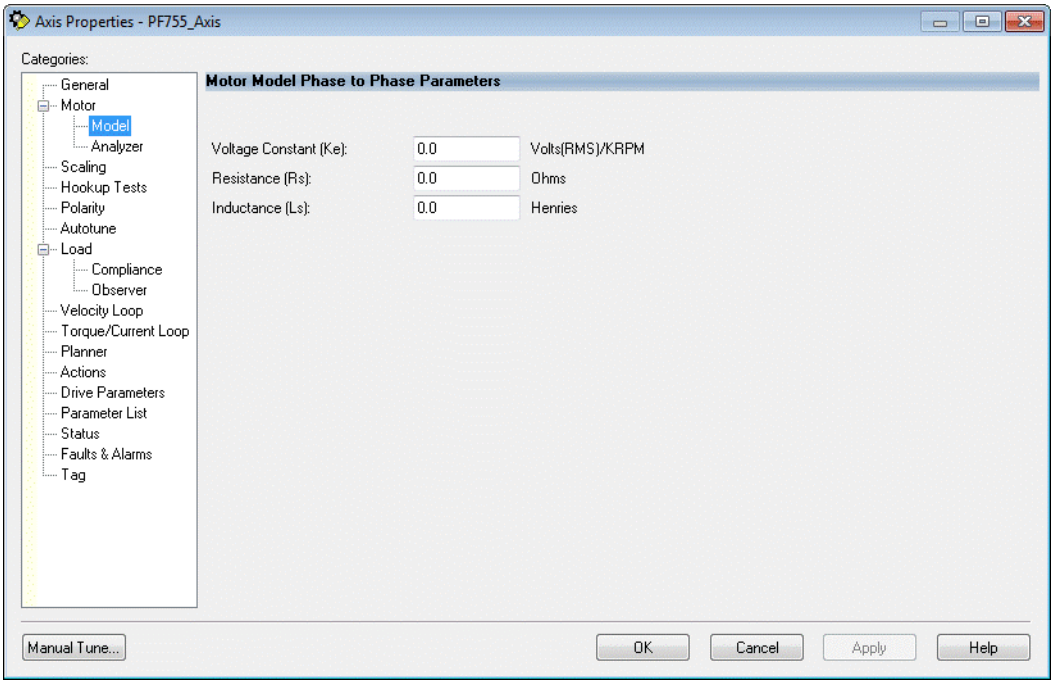

Table 20 - Permanent Magnet Motor Model Instance to Parameter Cross Reference

Integrated Motion on EtherNet/IP Instance	Drive Parameter
PM Motor Rotary Voltage Constant	P86 [PM CEMF Voltage]
PM Motor Resistance	P87 [PM IR Voltage]
PM Motor Inductance	P88 [PM IXq Voltage] P89 [PM IXd Voltage]

Motor Feedback Axis Properties Configuration

Motor Feedback Axis Properties

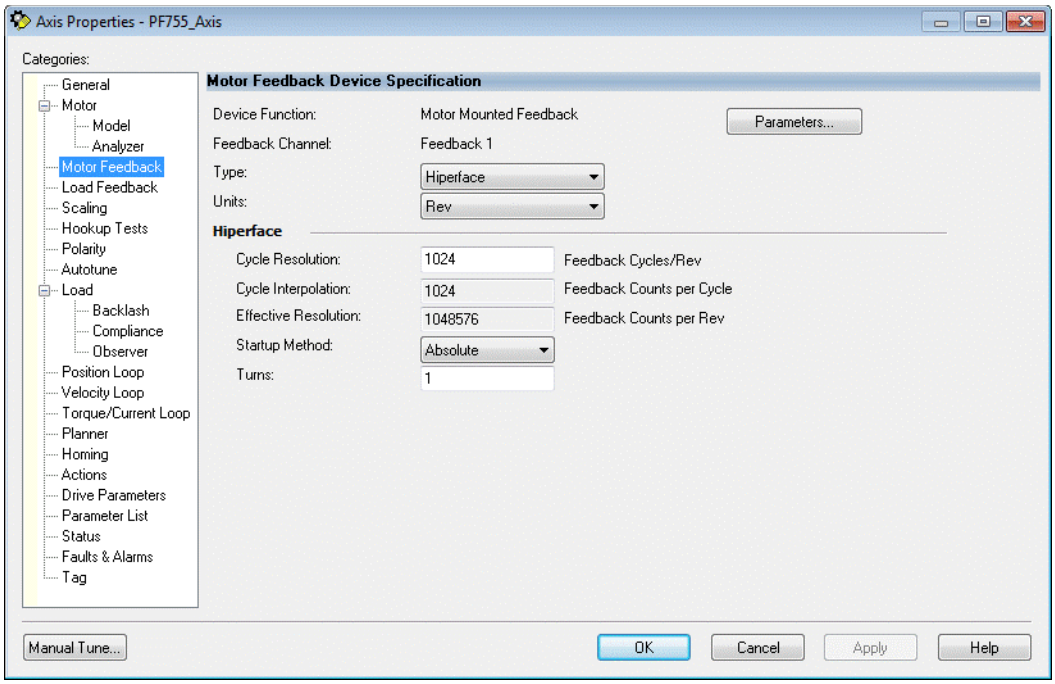

Motor Feedback Motion Axis Parameters

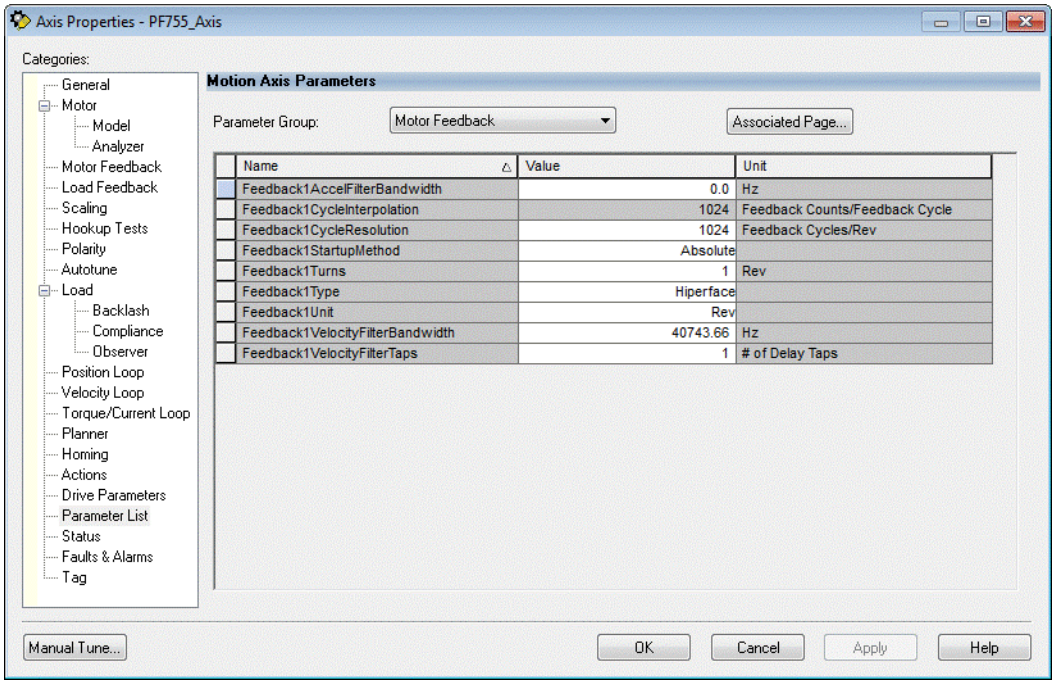

Table 21 - Motor Feedback Instance to Parameter Cross Reference

Integrated Motion on EtherNet/IP Instance	Drive Parameter
Feedback n Accel Filter Bandwidth	P705 [Inertia Adapt BW]
Feedback n Cycle Resolution	ENC: P02 [Encoder PPR] DENC: P02 [Encoder 0 PPR] DENC: P12 [Encoder 1 PPR] UFB: P15 [FB0 IncAndSC PPR] UFB: P45 [FB1 IncAndSC PPR]
Feedback n Turns	UFB: P22 [FB0 SSI Turns] UFB: P52 [FB1 SSI Turns]
Feedback n Type	UFB: P06 [FB0 Device Sel] UFB: P36 [FB1 Device Sel]
Feedback n Velocity Filter Bandwidth	P639 [SReg FB Fltr BW]
Feedback n Velocity Filter Taps	P126 [Pri Vel FdbkFltr]

Motor Load Feedback Axis Properties Configuration

Motor Load Feedback Axis Properties

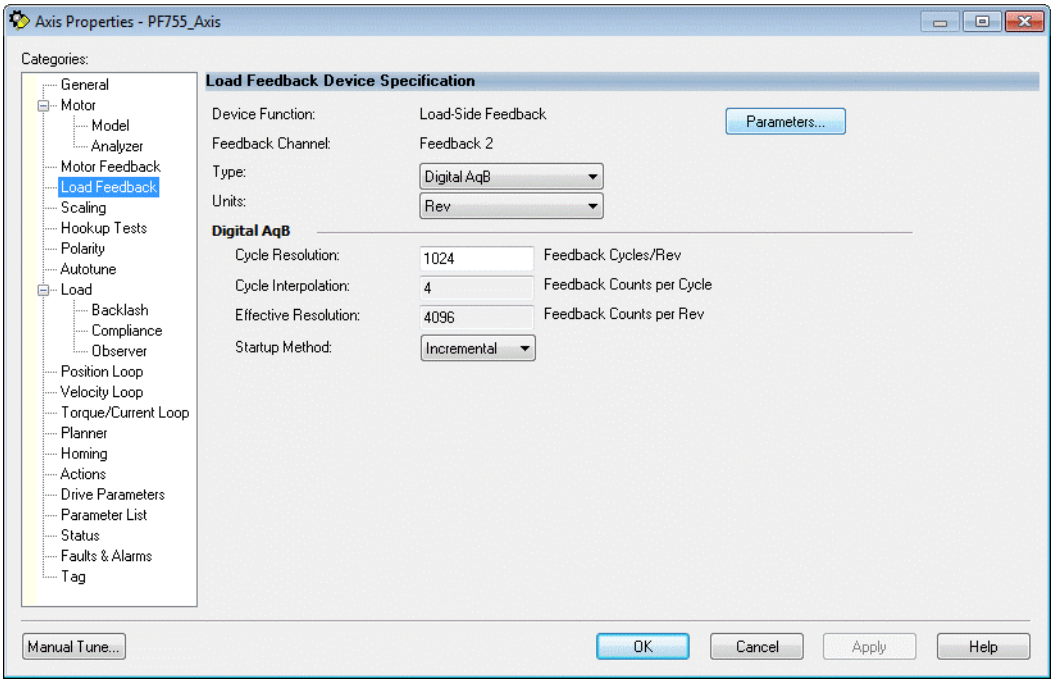

Motor Load Feedback Motion Axis Parameters

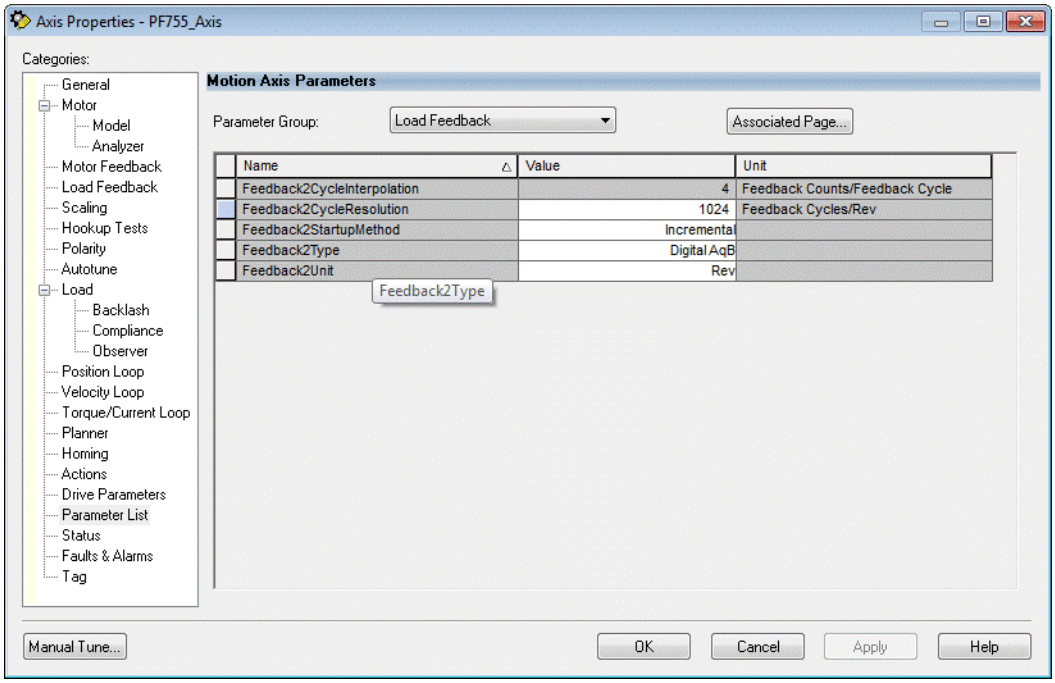

Table 22 - Motor Load Feedback Instance to Parameter Cross Reference

Integrated Motion on EtherNet/IP Instance	Drive Parameter
Feedback n Cycle Resolution	ENC: P02 [Encoder PPR] DENC: P02 [Encoder 0 PPR] DENC: P12 [Encoder 1 PPR] UFB: P15 [FB0 IncAndSC PPR] UFB: P45 [FB1 IncAndSC PPR]

Load Axis Properties Configuration

Load Axis Properties

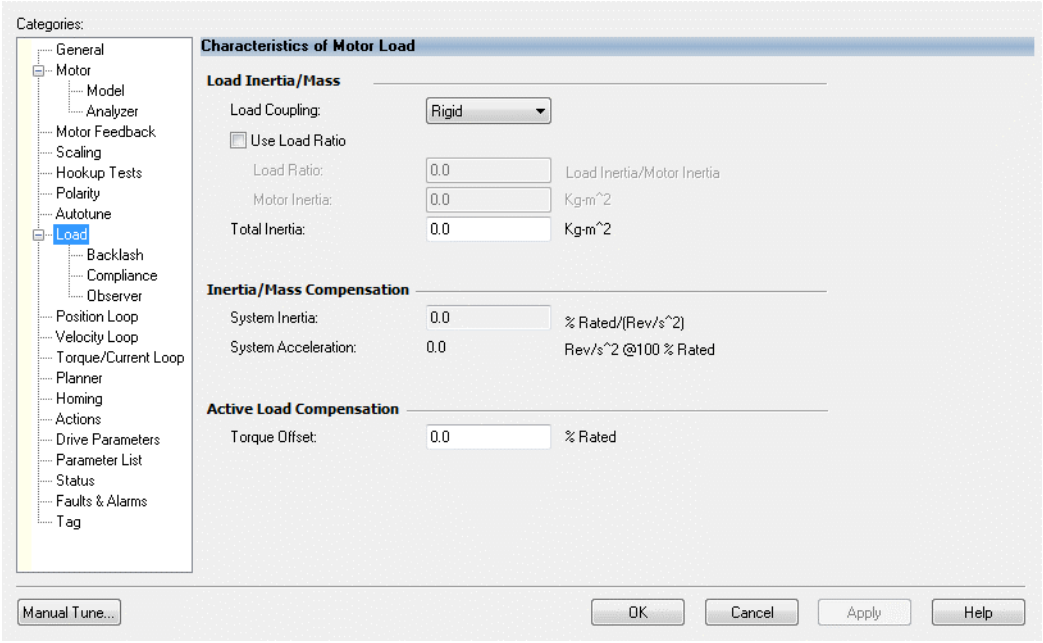

Load Motion Axis Parameters

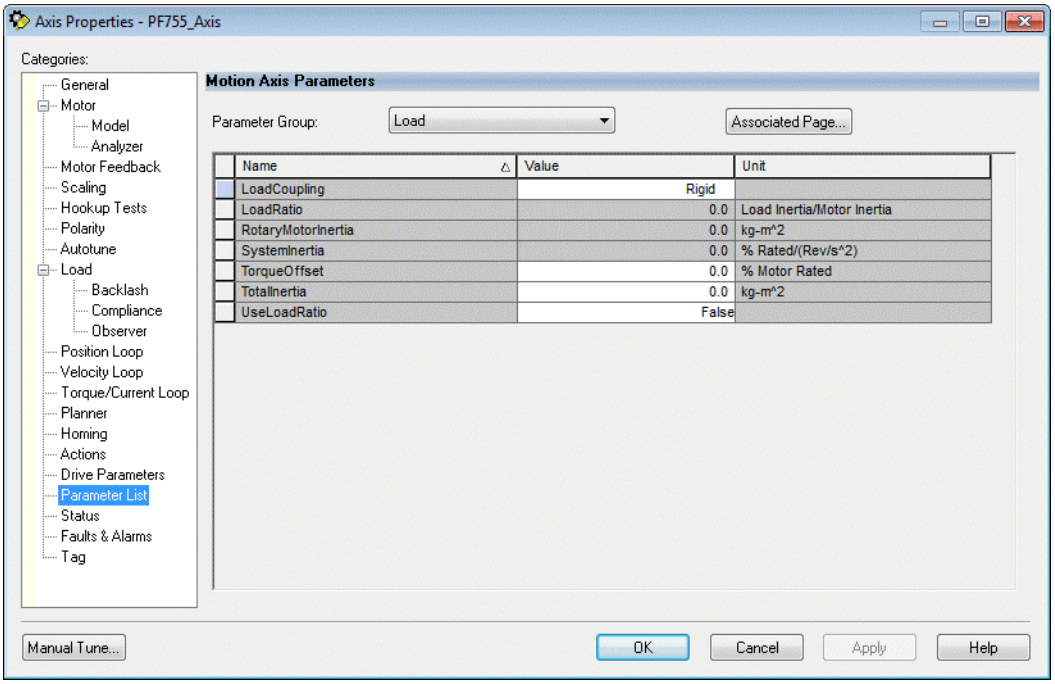

Table 23 - Load Instance to Parameter Cross Reference

Integrated Motion on EtherNet/IP Instance	Drive Parameter
Total Inertia	P76 [Total Inertia]
Torque Offset + Torque Trim	P686 [Torque Step] • Torque Offset is summed together with the Torque Trim value, which is sent synchronously to the drive every Coarse Update Period. The Torque Trim value is available for real time "active" torque corrections and the Torque Offset value is available for constant system torque compensation.

Load Backlash Axis Properties Configuration

Load Backlash Axis Properties

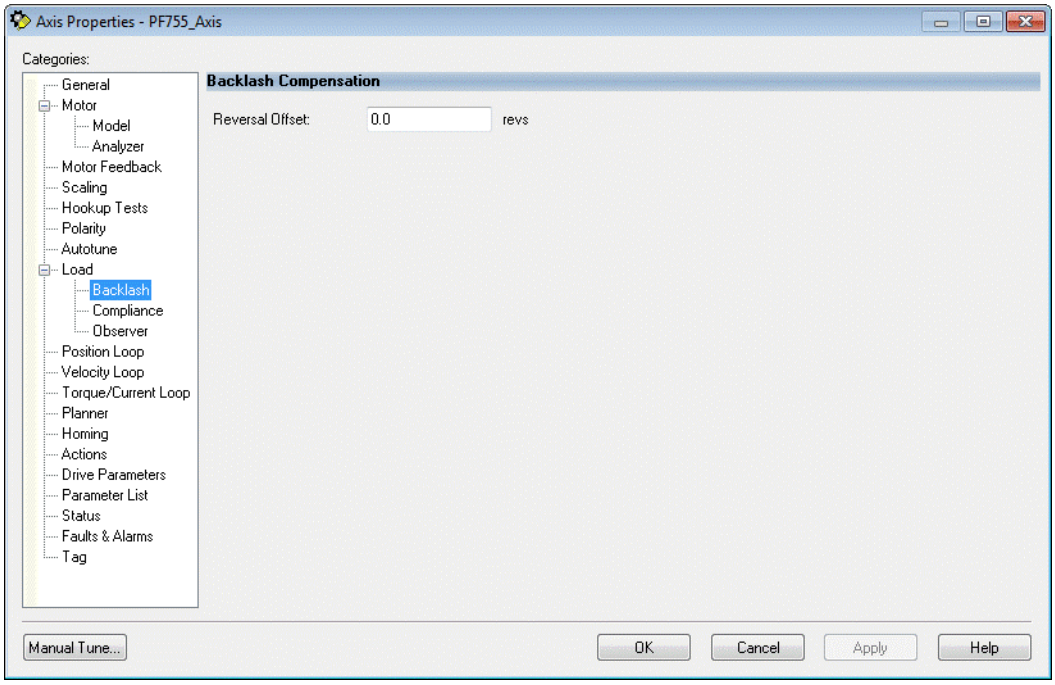

- Reversal Offset resides in the controller's Motion Planner

Load Compliance Motion Axis Parameters

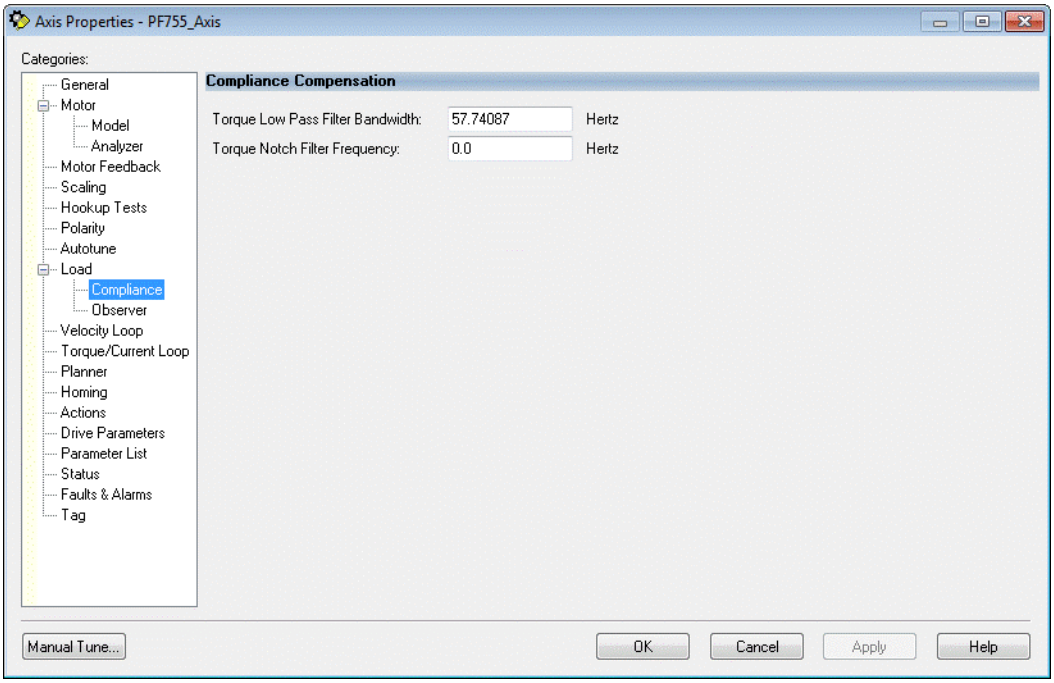

Table 24 - Load Compliance Instance to Parameter Cross Reference

Integrated Motion on EtherNet/IP Instance	Drive Parameter
Torque Low Pass Filter Bandwidth	P659 [SReg Outfltr BW]
Torque Notch Filter Frequency	P687 [Notch Fltr Freq]

Load Observer Axis Properties Configuration

Load Observer Axis Properties

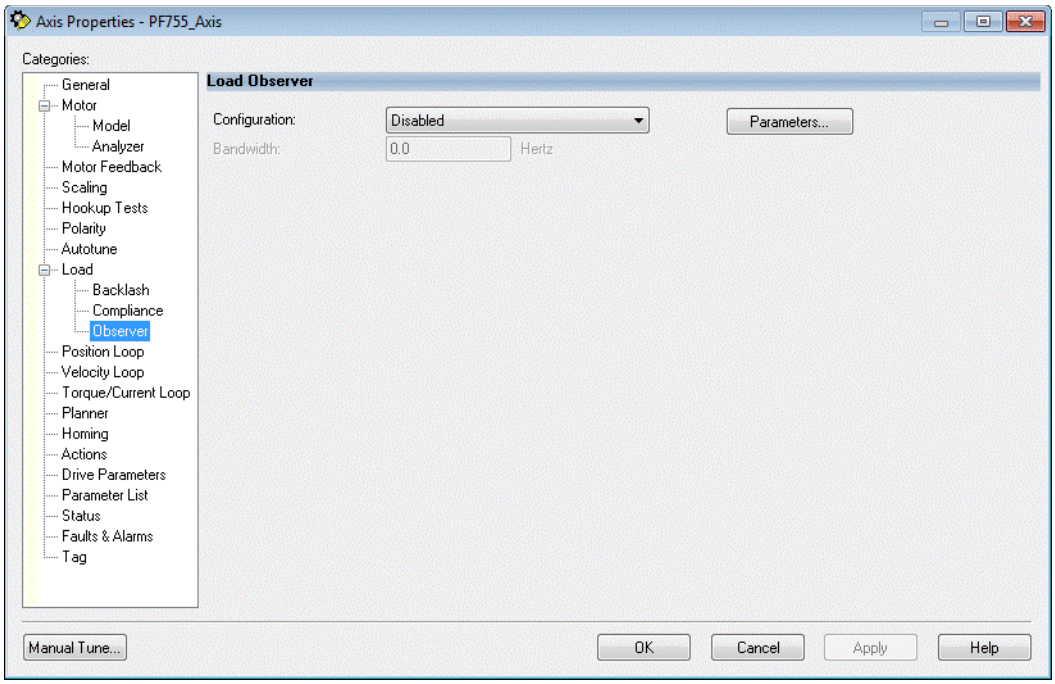

Load Observer Motion Axis Parameters

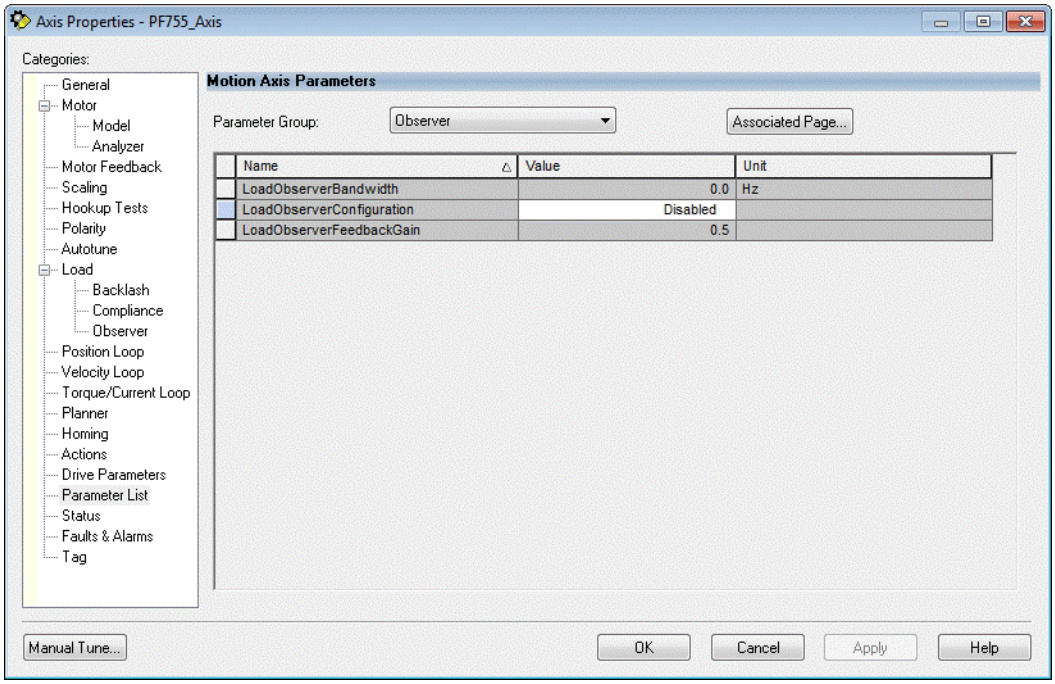

Table 25 - Load Observer Instance to Parameter Cross Reference

Integrated Motion on EtherNet/IP Instance	Drive Parameter
Load Observer Bandwidth	P711 [Load Observer BW]
Load Observer Configuration	P704 [InAdp LdObs Mode]
Load Observer Feedback Gain	P706 [InertiaAdaptGain]

Module Properties Power Tab Configuration

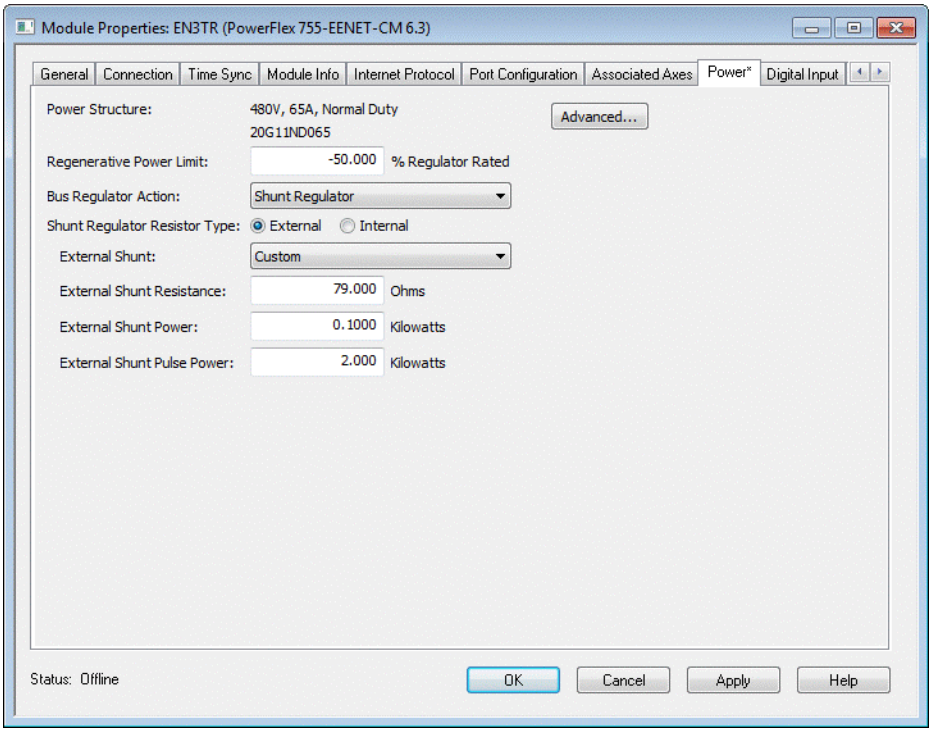

Table 26 - Power Tab to Parameter Cross Reference

Integrated Motion on EtherNet/IP Instance	Drive Parameter
Regenerative Power Limit	P426 [Regen Power Lmt]
Bus Regulator Action	P372 [Bus Reg Mode A]
Shunt Regulator Resistor Type	P382 [DB Resistor Type]
External Shunt Resistance	P383 [DB Ext Ohms]
External Shunt Power	P384 [DB Ext Watts]
External Shunt Pulse Power	P385 [DB ExtPulseWatts]

Motor Brake Control

When a PowerFlex 755 drive is configured for Integrated Motion on the EtherNet/IP Network none of the I/O option modules are supported. Normal means of having the drive control the brake and utilizing drive's I/O are not supported. Motor brake control must be user-configured in the Logix controller. The basic functionality involved is to enable the drive using an MSO instruction, verify that the drive is enabled, and then apply power to disengage the motor brake. The specific motor used and the application often dictates a time delay between when the drive is enabled and the brake is disengaged. A very similar sequence is followed with disabling the drive using an MSF instruction. In this case the brake is engaged, and after a user-configured amount of time, the drive is disabled. Figure 35 depicts this operation.

Figure 35 - Timing Diagram

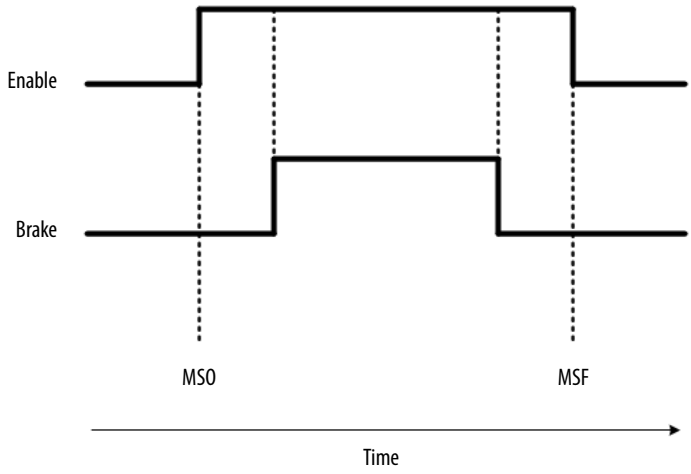

The sample ladder logic code in Figure 36 on page 339 depicts a possible solution for performing brake control (the code is an example only and is not the only solution for performing brake control). Each individual application determines the requirements for the necessary brake control.

Figure 36 - Sample Motor Brake Code

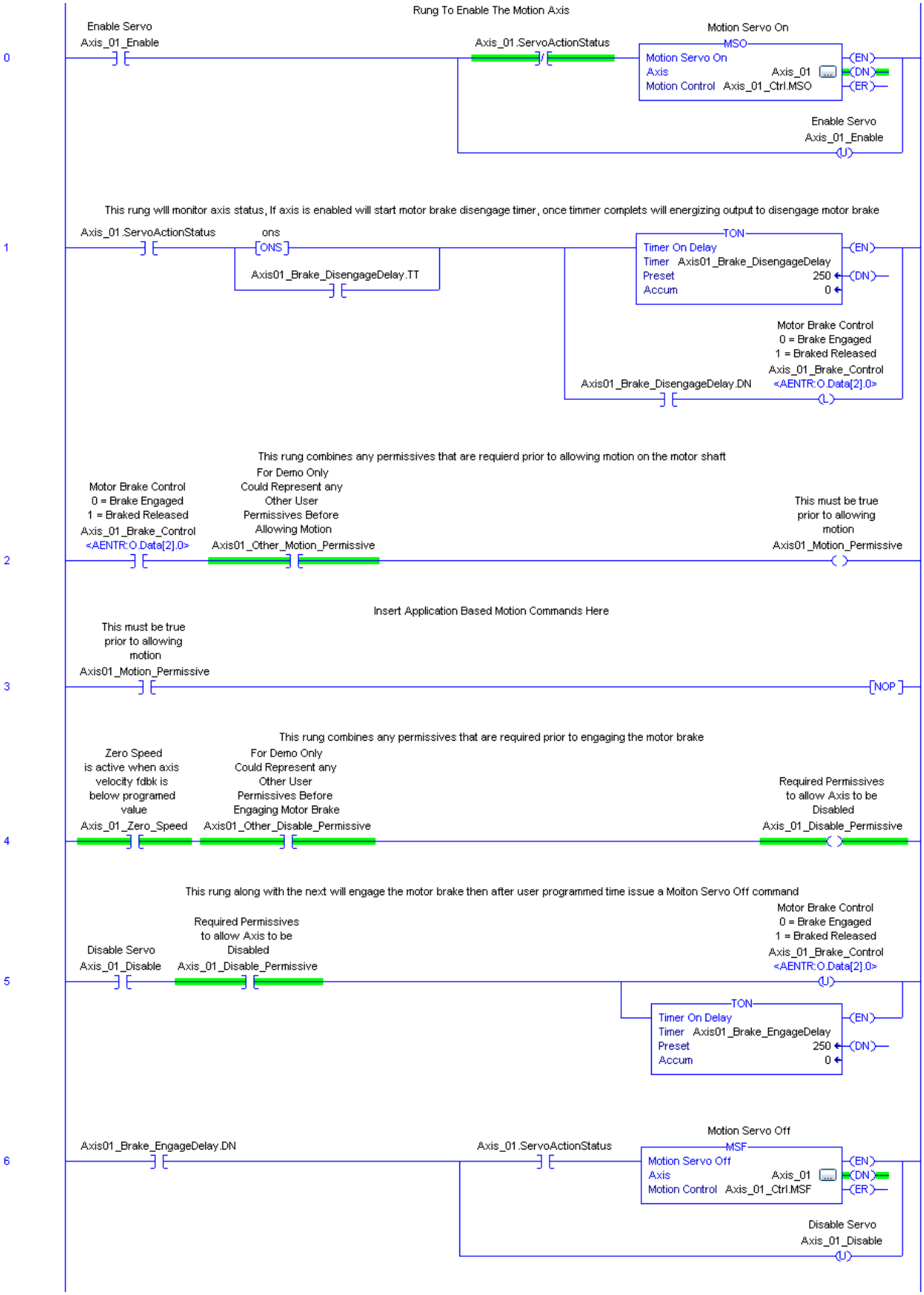

Along with normal modes of machine operation it is important to engage the brake in the event of a fault. Fault status can be monitored in the Logix code and the brake can be engaged in the event of a fault. Knowing what the configured Stop Action is helps determine when to engage the brake in the event of a fault. Application considerations can also be factored into this decision. This stop action is configured on the Axis Properties / Actions screen (as shown in this example).

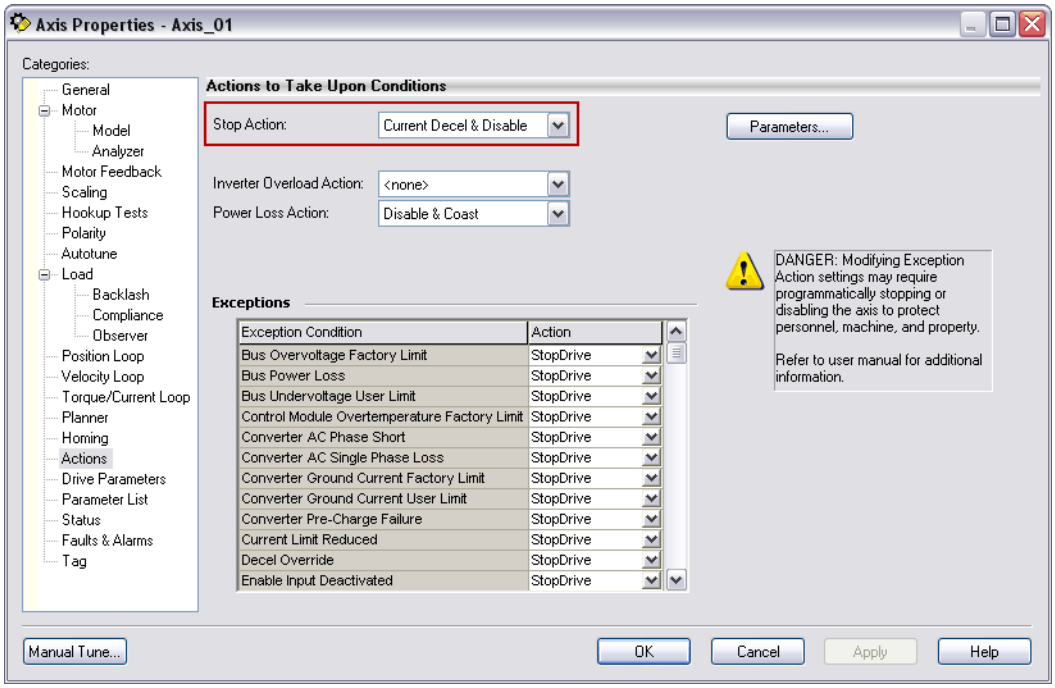

Network Topologies

This topic provides examples of network topologies that can be used when implementing an Integrated Motion on EtherNet/IP Network application by using on of the following programming software applications.

- RSLogix 5000, version 19 and later
- Studio 5000 environment, version 21 and later

Star Topology

A switch-level star configuration is a traditional Ethernet network layout where devices are connected to a centralized network switch, point-to-point. The star configuration is most effective when the devices are near a central network switch. In a star network topology, all traffic that traverses the network (that is, device-to-device) must pass through the central switch.

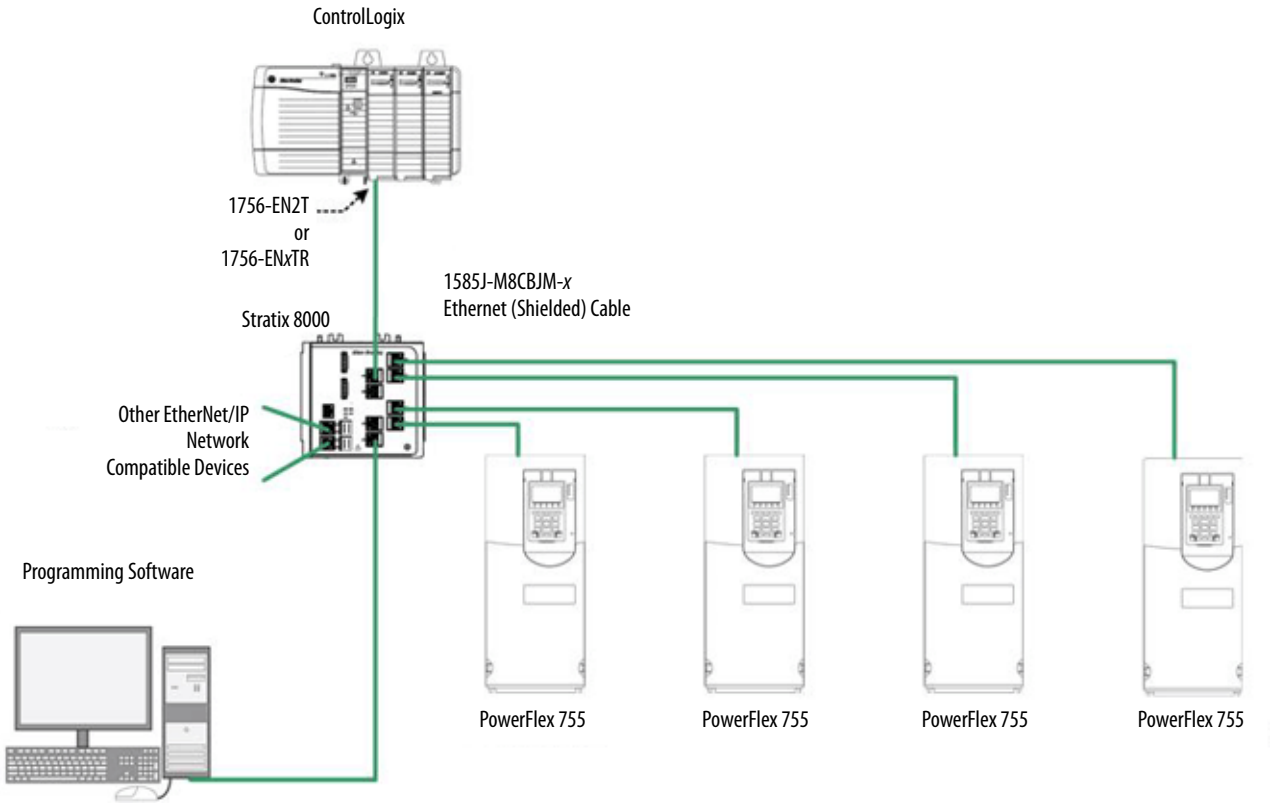

It is recommended that a managed switch with a transparent and/or boundary clock, plus QoS and IGMP protocol support be used for this Network topology.

Although the ControlLogix is illustrated, the CompactLogix controller could also be used.

Advantages/Disadvantages

The advantage of a star network is that if a point-to-point connection is lost to an end device, the rest of the network remains operational.

The primary disadvantage of a star topology is that all end devices must typically be connected back to a central location, which increases the amount of cable infrastructure that is required and also increases the number of available ports required by the central switch leading to a higher cost per node solution.

Linear Topology

In a linear topology, the devices are linked together via a two port embedded switch or through an EtherNet/IP network tap (1783-ETAP), instead of being connected back to a centralized network switch.

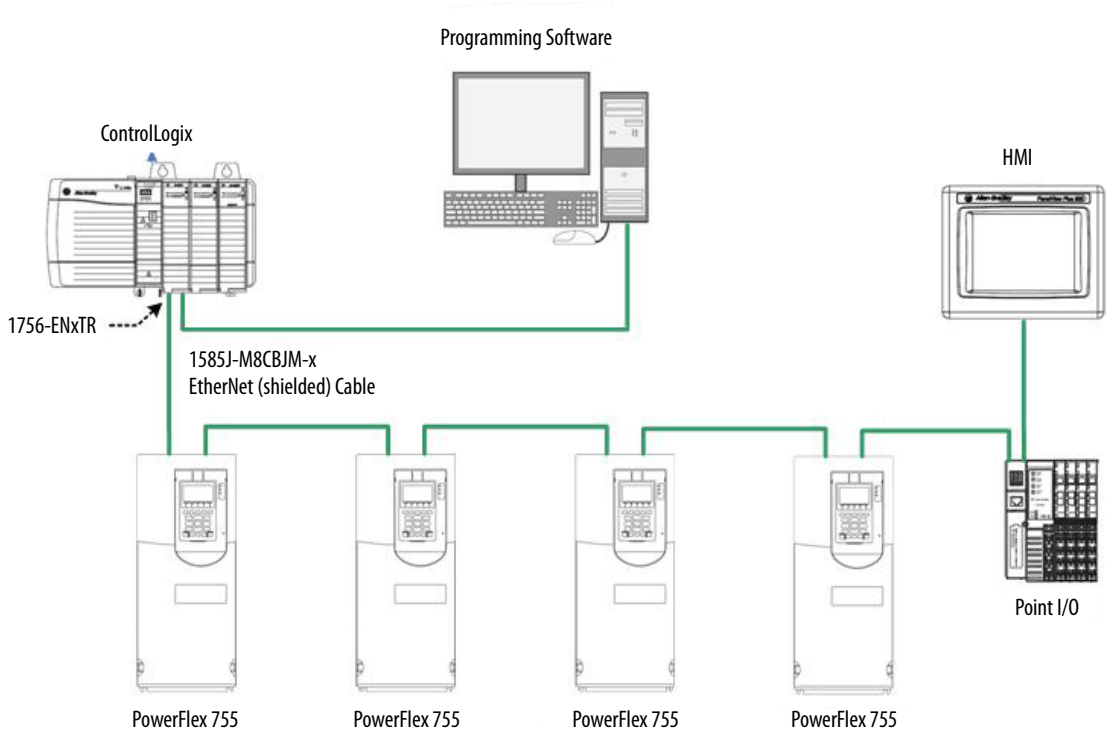

Either a Dual Port EtherNet/IP Option Module or an EtherNet/IP network tap (1783-ETAP) is required for this network topology (this diagram illustrates an application using the dual port option card). For more information about applying a Dual Port EtherNet/IP Option Module, see the PowerFlex 20-750-ENETR Dual-Port EtherNet/IP Option Module User Manual, publication 750COM-UM008.

Although the ControlLogix controller is illustrated, the CompactLogix controller could also be used.

Advantages/Disadvantages

The advantages of a linear network include the following:

- The topology simplifies installation by eliminating long cable runs back to a centralized switch.
- The network can be extended over a longer distance because individual cable segments can be up to 100m.

- The network supports up to 50 mixed devices per line.

The primary disadvantage of a linear topology is that a connection loss or link failure disconnects all downstream devices as well. To counter this disadvantage a ring topology could be employed.

Ring Topology

A ring topology, or device-level ring (DLR), is implemented in a similar fashion to linear topology. However, an extra connection is made from the last device on the line to the first, closing the loop or ring. It is crucial to configure the Ring Supervisor before connecting your linear topology into a ring topology.

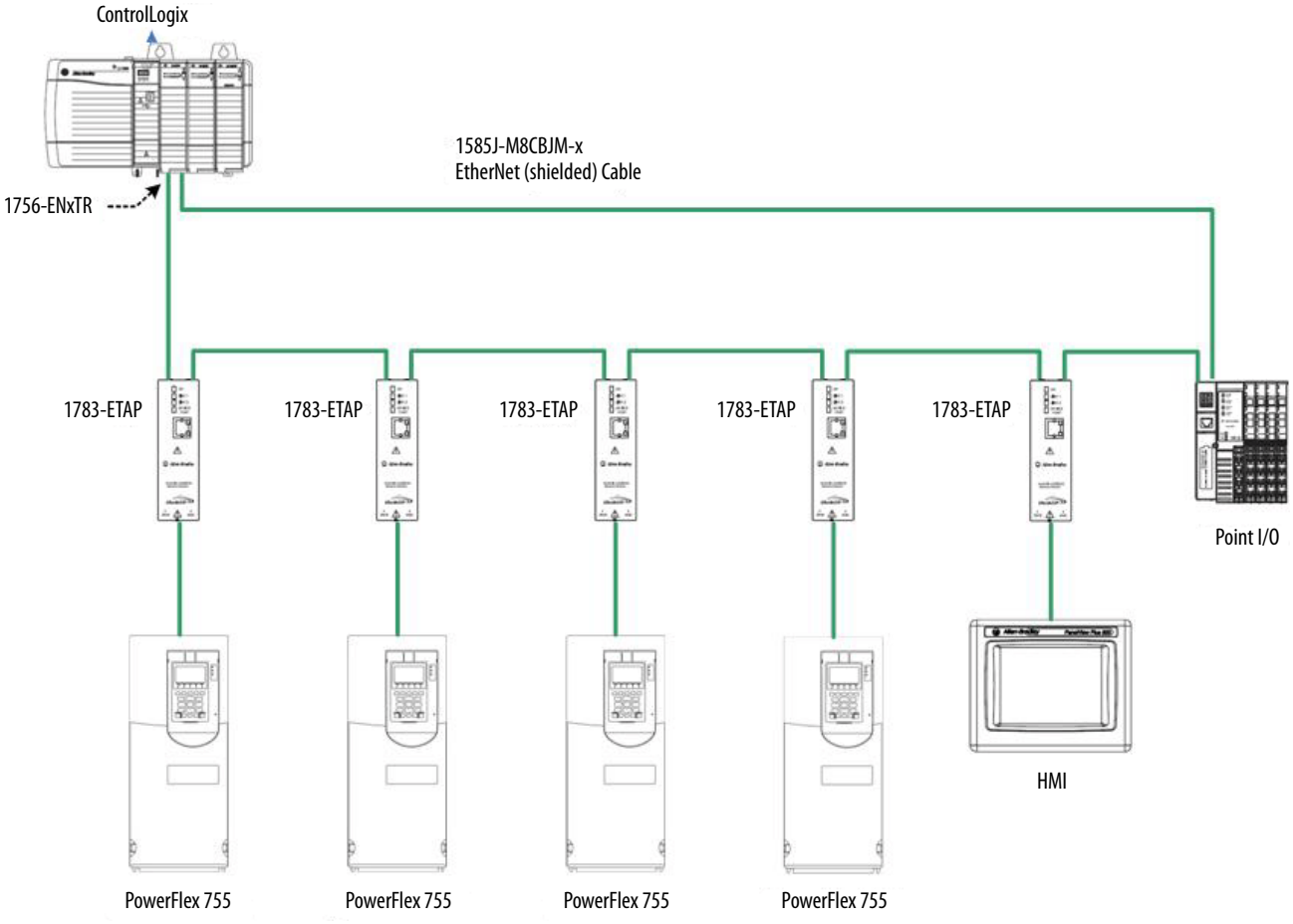

Either a Dual Port EtherNet/IP Option Module or an Ethernet/IP network tap (1783-ETAP) is required for this network topology (this diagram illustrates an application using ETAPs). For more information about applying a Dual Port EtherNet/IP Option Module, see the PowerFlex 20-750-ENETR Dual-Port EtherNet/IP Option Module User Manual, publication 750COM-UM008.

Although the ControlLogix is illustrated, the CompactLogix controller could also be used.

Advantages/Disadvantages

The advantages of a ring network include the following:

- Simple installation
- Resilience to a single point of failure (cable break or device failure)
- Fast recover time from a single point of failure

The primary disadvantage of a ring topology is an additional setup (for example, active ring supervisor) as compared to a linear or star network topology.

Linear/Star Topology

Network switches can be added to the end of the line, creating a linear/star topology. Ethernet devices that do not have embedded switch technology can be connected in a star topology off of the switch.

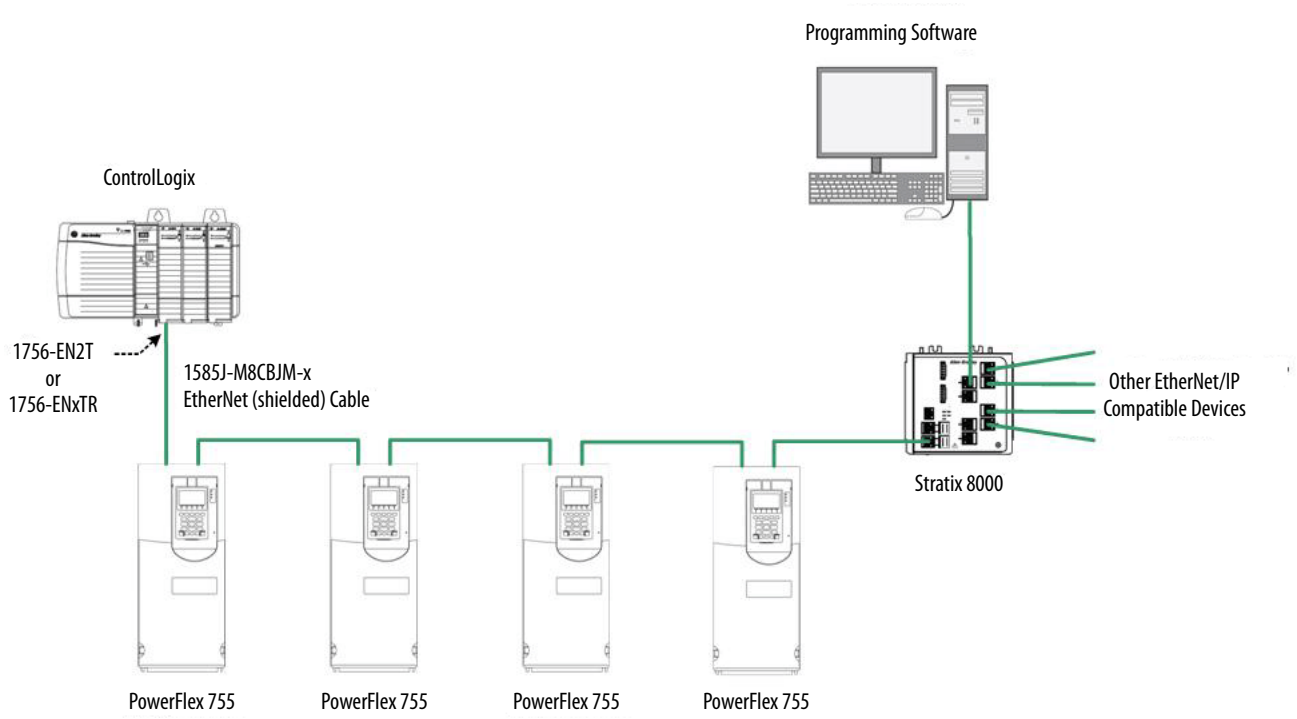

It is recommended that a managed switch with a transparent and/or boundary clock, plus QoS and IGMP protocol support be used for this Network topology.

Although the ControlLogix controller is illustrated, the CompactLogix controller could also be used.

Ring/Star Topology

Network switches can also be connected into a DLR via an Ethernet/IP tap, creating a ring/star topology.

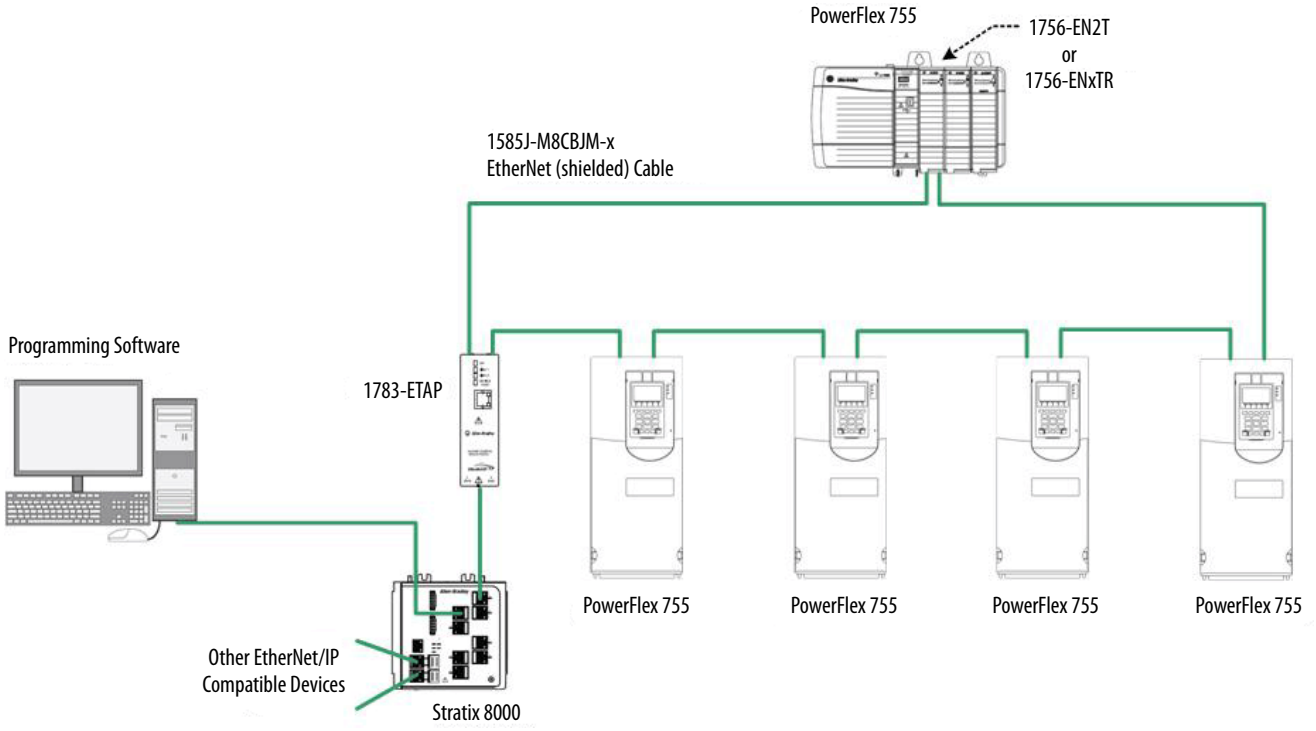

It is recommended that a managed switch with a transparent and/or boundary clock, plus QoS and IGMP protocol support be used for this Network topology.

Although the ControlLogix controller is illustrated, the CompactLogix controller could also be used.

PowerFlex 755 and Kinetix 7000 Drive Overload Rating Comparison for Permanent Magnet Motor Operation

The PowerFlex 755 drive can be configured for a normal duty or heavy duty operation. The heavy duty rating has a lower continuous current rating and therefore can produce more current during an overload.

Duty Rating	0 Hz	100%	110%	150%	180%
Normal	50%	100%	One minute	3 seconds	Not applicable
Heavy	65%	75% of normal duty	–	One minute of normal duty	3 seconds of normal duty

The Kinetix 7000 drive overload capability is specific for each power structure. However, the Kinetix 7000 can produce 100% current at 0 Hz.

With permanent magnet motors, the torque is directly proportional to the current. Therefore, the overload ratings of the drive to which the motor is connected provides the torque overload capability of the motor.

PowerFlex 755 Drive Option Module Configuration and Restrictions

When the PowerFlex 755 drive is configured for an Integrated Motion on the EtherNet/IP Network application, only specific option modules are supported, and in some cases, the port in which the option module is installed in the control pod is restricted.

IMPORTANT The PowerFlex 750-Series I/O option modules (20-750-2262C-2R, 20-750-2263C-1R2T, 20-750-2262D-2R) must not be used with the Integrated Motion on the EtherNet/IP Network.

Supported Modules		Valid Port Installation Location
Cat. No.	**Option Module Name**	
20-750-S	Safe Torque Off	6
20-750-S1	Safe Speed Monitor	6
20-750-ENC	Single Incremental Encoder	4…8
20-750-DENC	Dual Incremental Encoder	4…8
20-750-UFB	Universal Feedback	4…6
20-750-APS	Auxiliary Power Supply	8
20-750-ENETR	Dual-Port Ethernet/IP	4 and 5

If an unsupported option module is installed, the drive stops responding and the HIM displays “CONFIGURING.”

Safety Option Modules (20-750-S, 20-750-S1)

This restriction and configuration setting must be used when using either of these safety option modules with the Integrated Motion on the EtherNet/IP Network:

- The option modules must be installed in port 6 of the drive control pod only.
- The specific drive module and option catalog number must be selected when adding the drive to the I/O tree in the project. For example, when adding a PowerFlex 755 drive with a Safe Speed Monitor option module, choose 755-EENET-CM-S1.

Feedback Option Modules (20-750-ENC, 20-750-DENC, and 20-750-UFB)

Follow the same installation and configuration instructions provided in the PowerFlex 750-Series AC Drives Installation Instructions, publication 750-IN001.

Auxiliary Power Supply Option Module (20-750-APS)

Follow the same installation and configuration instructions provided in the PowerFlex 750-Series AC Drives Installation Instructions, publication 750-IN001.

Dual-Port EtherNet/IP Option Module (20-750-ENETR)

Follow the same installation and configuration instructions provided in the PowerFlex 750-Series AC Drives Installation Instructions, publication 750-IN001.

Regenerative/Braking Resistor

When using a PowerFlex 755 drive with a dynamic brake (shunt regulator) in an Integrated Motion on the Ethernet/IP network the dynamic brake must be set up as part of the I/O connection of the PowerFlex 755 embedded Ethernet/IP module (EENET-CM-*xx*) properties. Failure to set up the dynamic brake correctly could lead to mechanical damage of the machine. Dynamic brake (shunt) resistor sizing is not covered in this document. For more information on resistor sizing, see the Drives Engineering Handbook, publication DEH-1300-10.

I/O Configuration for a Dynamic Brake (shunt regulator)

Follow these steps to configure a dynamic brake (shunt regulator) for a PowerFlex 755 drive in the Logix Designer application.

1. In the I/O Configuration, double-click the PowerFlex 755-EENET-CM-*xx* module and select Properties.

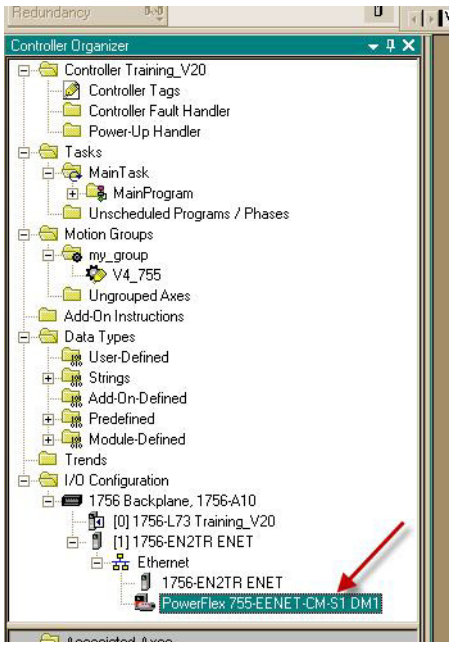

The Module Properties dialog box appears.

2. Click the Power tab and configure the appropriate boxes according to your application.

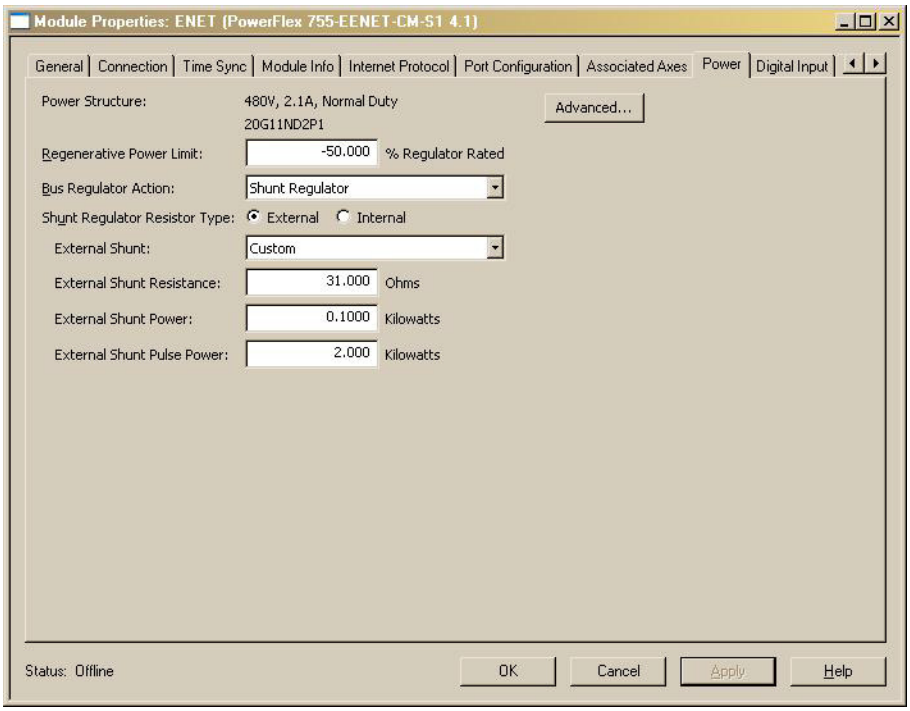

Regenerative Power Limit	The amount of energy that the drive allows during regeneration. If an external regenerative power supply or shunt (dynamic brake) resistor is used, it is recommended that this value be set to -200.0%. **Important:** If this value is set too low, the ability of the drive to stop a motor is limited.
Bus Regulator Action	• Disabled - This selection disables the drive's internal DC bus voltage regulation feature. Select this option if there is an external regenerative brake or regenerative line supply connected to the drive DC bus. • Shunt Regulator - This selection is used when either an external shunt resistor is connected to the drive or the internal IGBT is controlling the power dissipation to the resistor (the type of shunt resistor is selected below). • Adjustable Frequency - This selection let the drive either change the torque limits or ramp rate of the velocity to control the DC bus voltage. This option is not recommended for positioning applications because it overrides the velocity and the system can overshoot or may not stop. • Shunt then Adjustable Frequency - This selection lets the Shunt resistor absorb as much energy as it is designed for, then transitions to adjustable frequency control if the limit of the resistor has been reached. • Adjustable Frequency then Shunt - This selection enables adjustable frequency control of the DC bus. If adjustable frequency control cannot maintain the DC bus within limits, the shunt resistor is activated.
Shunt Regulator Resistor Type	Select the type of resistor connected to the drive. Internal resistors include 20-750-DB1-D1 or 20-750-DB1-D2 for frames 1 and 2 drives, respectively. External identifies that a user-selected resistor is used.
External Shunt	When using an external shunt resistor select "Custom."

External Shunt Resistance	Enter the resistance of the external resistor connected to the drive terminal block connections, BR1 and BR2. Verify that the resistance is equal to or greater than the minimum resistance for the drive capabilities. See "Minimum Dynamic Brake Resistance" in the PowerFlex 750-Series AC Drives Technical Data, publication 750-TD001.
External Shunt Power	Enter the continuous power dissipation rating (kW) of the external resistor. Failure to specify the correct value can cause the drive to either stop sending energy to the resistor prematurely or overheat the resistor. For example, if an 800 W rated resistor is installed, enter 0.8 in this field.
External Shunt Pulse Power	The Watt-Second or Joules rating (kW) of the resistor. This is the amount of energy that the resistor can withstand for one second to reach the maximum temperature. Failure to specify the correct value can cause the drive to either stop sending energy to the resistor prematurely or overheat the resistor.

3. Click OK.

Safe Speed Monitor Option Module (20-750-S1) Configuration

When a PowerFlex 755 drive is configured for Integrated Motion on the EtherNet/IP Network the configuration of the Safe Speed Monitor functions are accomplished via a web page.

Configuring the Safe Speed Functions

The Safe Speed Monitor module web page differs from the Embedded EtherNet/IP adapter (port 13) web page that is enabled by setting adapter parameter P52 [Web Enable] to 1 “Enabled.” The Safe Speed Monitor module web page is not accessible until the drive has established a network connection to a Logix processor and the Integrated Motion on the EtherNet/IP Network connection has been established. The web page is then accessed by entering the IP address of the drive into a web browser (for example, http://192.168.1.20/). Currently, safety configuration settings cannot be saved in the drive or downloaded to other drives.

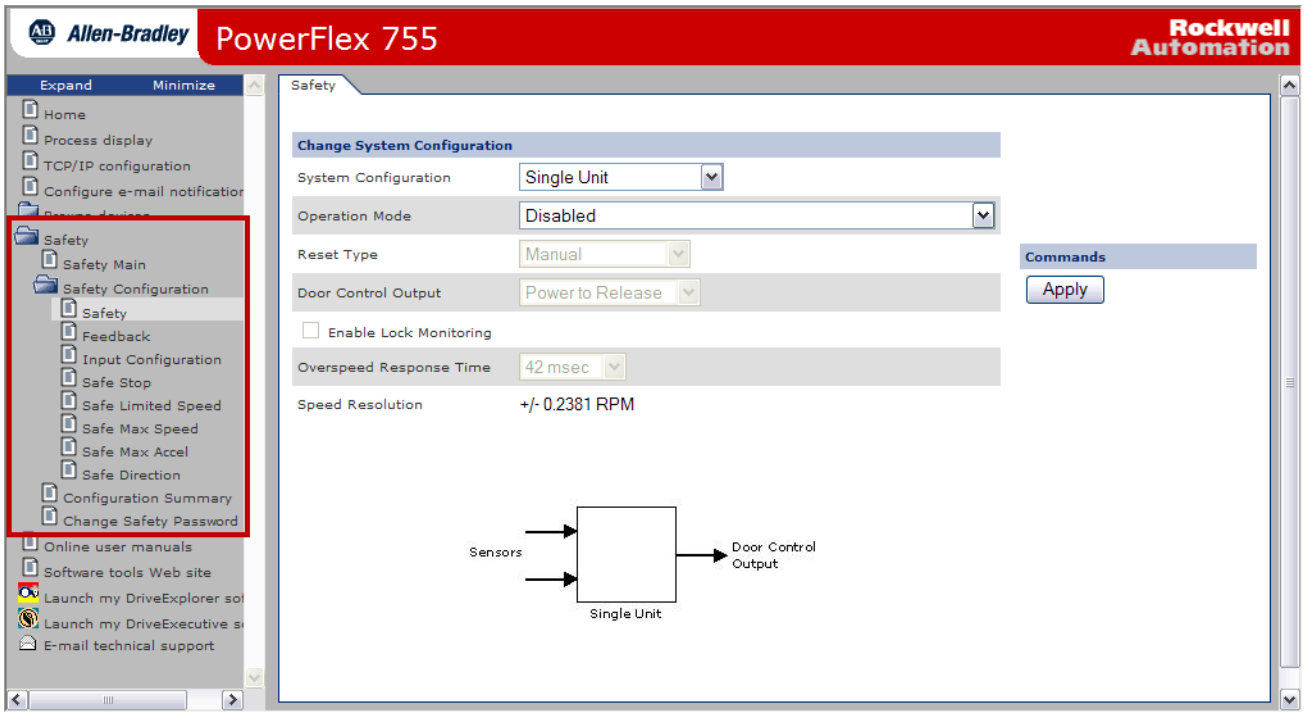

TIP The Safe Speed Monitor module parameters are not currently part of the Logix platform and therefore, are not overwritten when a drive establishes a Integrated Motion on the EtherNet/IP Network connection. Therefore, it is possible to program the Safe Speed Monitor functions with configuration software (for example, Connected Components Workbench) or a HIM before a network connection is established. This lets you save the safety configuration in the software application or HIM. Configuration of the safety functions can be accomplished in one of the following ways:

- Program the Safe Speed Monitor functions and then download the program that includes the drive parameters to the Logix controller and establish the network connection.
- Inhibit the drive in the Logix I/O tree and program the Safe Speed Monitor functions.
- Disconnect the network cable between the drive and the controller and program the Safe Speed Monitor functions.

Configuring the Stop Command

While there are different selections when operating the drive and Safe Speed Monitor option module in Standard mode versus the Integrated Motion on the EtherNet/IP Network mode, the equivalent functions operate the same. In the Integrated Motion on the EtherNet/IP Network mode of operation, the Stop Command is programmed in the Actions Category of the Module Properties dialog box. It is important to realize that there is no option to have a ramped stop selected here; only current limit and motor brake options are available. These selections do not ensure that a consistent ramp is implemented each time. If a repeatable ramped stop is desired, then the user can program a Stop Monitor Delay as a part of the Safe Speed Monitor configuration and then monitor the Safe Speed inputs from the controller and issue a ramped stop prior to the safety core issuing the Stop Command signal (as shown in this diagram).

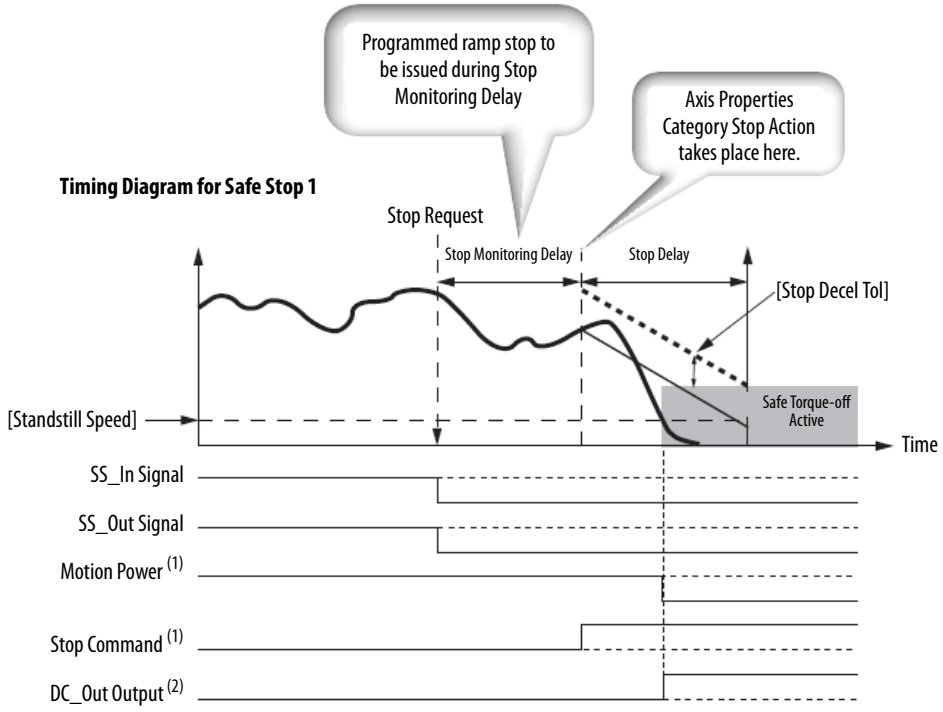

(1) This signal is internal between the safety option module and the drive.
(2) The DC_Out output is shown configured as Power to Release.

Speed Limited Adjustable Torque (SLAT)

This topic describes how to configure a PowerFlex® 755 AC drive with embedded Ethernet/IP for Speed Limited Adjustable Torque (SLAT) operation using an Integrated Motion on the Ethernet/IP network in Logix Designer application. For more information on SLAT refer to the following publications:

- See Speed Limited Adjustable Torque (SLAT) Min Mode and SLAT Max Mode in the PowerFlex 700S AC Drives with Phase II Control Reference Manual, publication PFLEX-RM003.
- See Slat Configuration in the Integrated Motion on the Ethernet/IP Network Reference Manual, publication MOTION-RM003.

Add a PowerFlex 755 Drive Module to Your Project

See the Integrated Motion on the Ethernet/IP Network Configuration and Startup User Manual, publication MOTION-UM003, for specific instructions on adding a PowerFlex 755 with embedded Ethernet/IP drive module to your project. An example Module Properties dialog box for a PowerFlex 755 with embedded Ethernet/IP is shown here.

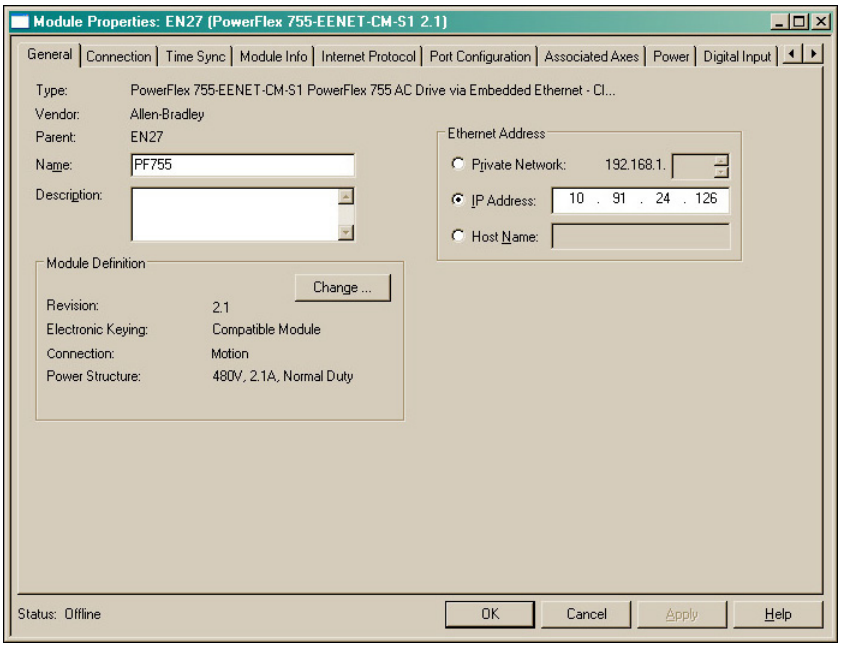

Create and Configure an Axis for the PowerFlex 755 Drive

1. See the Integrated Motion on the Ethernet/IP Network Configuration and Startup User Manual, publication MOTION-UM003, for specific instructions on creating and configuring the axis for the PowerFlex 755 drive.

2. In the General dialog, from the Axis Configuration pull-down menu, choose Velocity Loop.

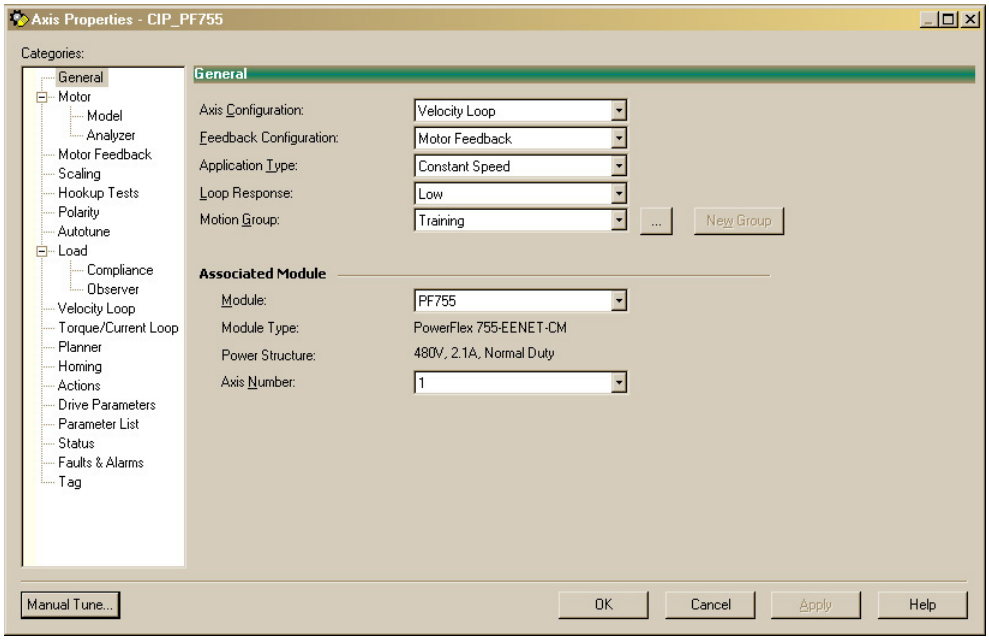

3. Select the Velocity Loop category.

   The Velocity Loop dialog box appears.

4. Click Parameters.

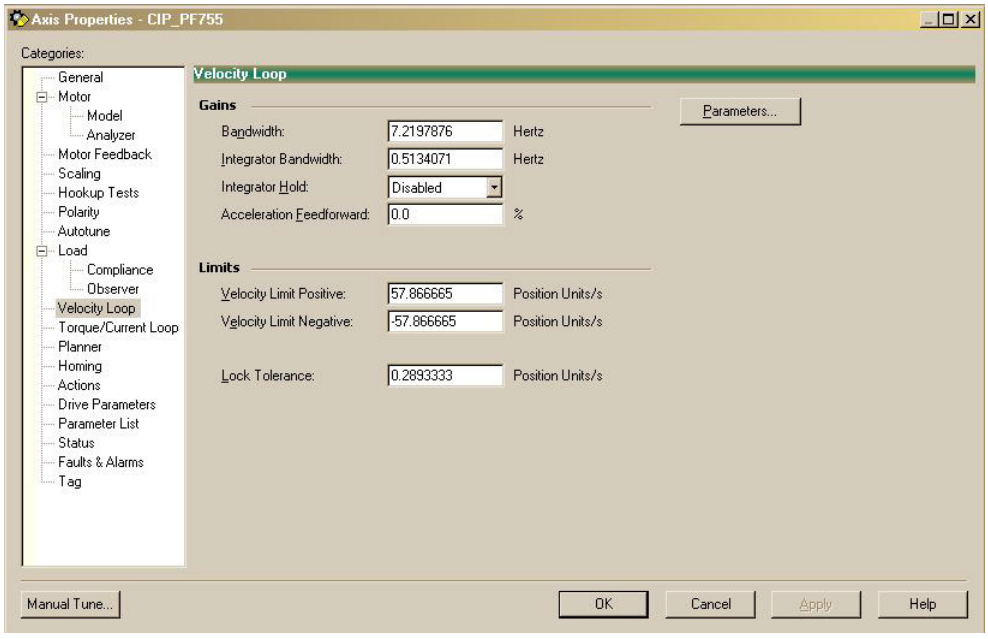

The Motion Axis Parameters dialog box appears.

5. Configure the SLAT parameters. See Slat Configuration in the Integrated Motion on the Ethernet/IP Network Reference Manual, publication MOTION-RM003, for a complete list and descriptions of the SLAT parameters.

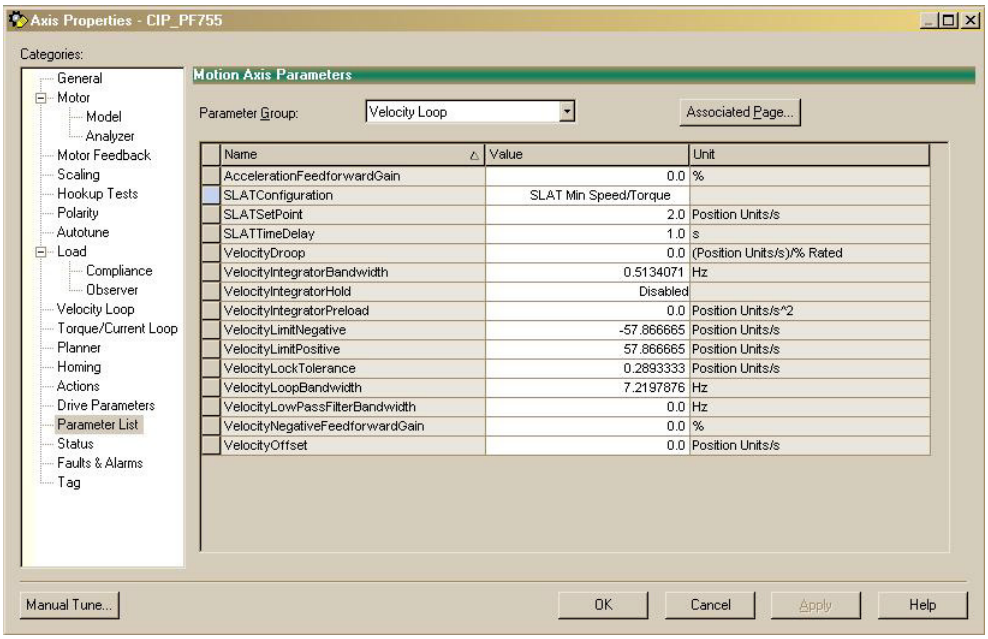

Program Commands

When using SLAT with Integrated Motion on the Ethernet/IP network you must start the PowerFlex 755 drive with the MDS instruction as shown below. The Speed reference is sent in the MDS instruction. Also, the torque command is sent to "AxisTag.CommandTorque." To make changes to the speed reference you need to re-trigger the MDS instruction.

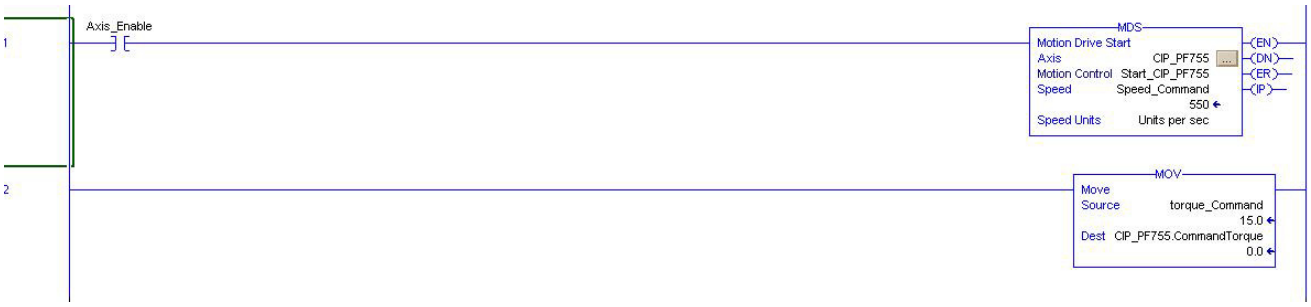

To use the Motion Axis Stop (MAS) instruction, you must set Change Decel to "No." Otherwise an instruction error occurs. The deceleration rate is set based on the Ramp Deceleration attribute.

To view help for the MDS instructions, right-click MDS in the function block and choose Instruction Help, or select the instruction and press F1. Additionally, see "Speed Limited Adjustable Torque (SLAT) Min Mode and SLAT Max Mode" in the PowerFlex 700S AC Drives with Phase II Control, Reference Manual, publication PFLEX-RM003.

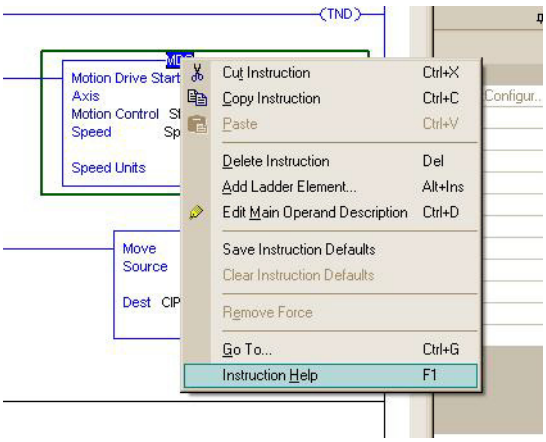

Changing the Accel/Decel Times for the MDS Instruction

If you are using the MDS instruction, the drive accelerates and decelerates at the planner Max Acceleration and Deceleration values. To set the "RampAcceleration" and "RampDeceleration" you need to use SSV instructions to change the ramp rates. Below is an example of the SSV instructions:

- Set the RampAcceleration / RampDeceleration attribute to "x" revs/sec^2
- Class Name = Axis
- Instance Name = "Axis Name"
- Attribute Name = RampAcceleration/RampDeceleration
- Source = Tag for value

Example: Velocity (Speed) command is 30 revs/sec and you want to reach that speed from zero in 6.5 seconds. Ramp Acceleration needs to be set to 4.615 revs/sec^2.

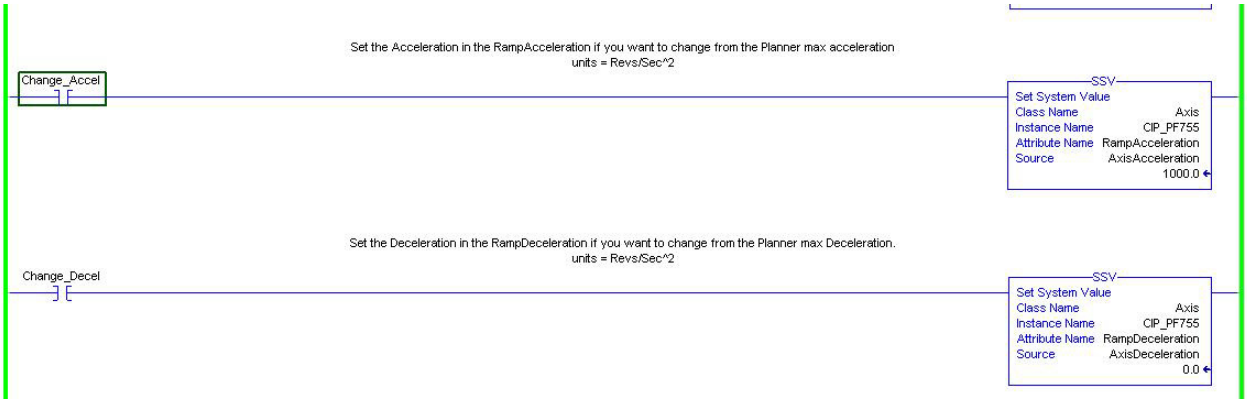

Supported Motors

The PowerFlex 755 can be used with a variety of both induction and permanent magnet (PM) motors.

AC Induction Motors

An AC induction motor uses slip between the rotor and the stator to create torque. Some motor manufacturers specify the synchronous speed instead of slip speed on the motor nameplate. For example, a 4 pole, 60 hertz motor has a synchronous speed of 1800 rpm. The drive algorithm cannot use the synchronous speed, it needs the slip rpm. The slip rpm is the rotor speed when the stator is at rated frequency and the motor is at full load. The rotor slips behind the stator to create the torque. For a 4 pole, 60 hertz motor the slip rpm range is 1700...1790 rpm. If the nameplate is showing synchronous speed (in our example 1800 rpm), please contact the motor manufactures to receive the slip rpm.

Some AC motors have two voltage ratings, a high voltage and a low voltage. Follow the motor manufacture's wiring diagram to correctly wire the motor for the proper voltage.

All motor manufactures provide an electrical specification including an electrical model equivalent. If you believe that the PowerFlex drive family is not producing the correct motor torque, please contact the motor manufacturer to receive the electrical specification prior to contacting Rockwell Automation Technical Support.

This list contains the name of manufacturers that produce motors that are recommended for use with PowerFlex 755 drives.

Manufacturer	Notes
Baldor Electric Company	Work well with PowerFlex 755 drives.
Baumuller	Work well with PowerFlex 755 drives.
Elin	Work well with PowerFlex 755 drives.
Electrical Apparatus Company (EAC)	Induction motors work well with PowerFlex 755 drives.
Lenze	Some Lenze motors have been stamped with synchronous speed versus slip speed. Please contact Lenze to get the slip speed.
Marathon Electric	Work well with PowerFlex 755 drives. Marathon stamps all pertinent information on their nameplate including electrical model equivalent.
Reliance	RPM AC motors are used in industry and work well with PowerFlex 755 drives.
Reuland Electric Company, Inc.	Work well with PowerFlex 755 drives. Reuland stamps the motor with synchronous speed and then supplies the slip frequency. You must calculate the slip frequency in rpm and then subtract the slip rpm from the synchronous speed to get the slip speed. Before contacting Rockwell Automation Technical Support, please obtain the electrical specification sent with the motor.
Rockwell Automation	8720 and HPK motors work well with PowerFlex 755 drives. See the appropriate motor manual for the proper nameplate voltage.
SEW-EURODRIVE	SEW-EURODRIVE gear motors are widely used in industry and work well with PowerFlex 755 drives. Some of the older motors were stamped with synchronous speed versus slip speed. Please contact SEWS if the motor is stamped with synchronous speed. If you are using an SEW motor with an integral brake, please verify that the brake is properly suppressed for noise.

Manufacturer	Notes
WEG Electric Corp.	WEG motors can have a start winding and a run winding. Always wire the drive to the run winding.
Wittenstein	Work well with PowerFlex 755 drives.
Wound rotor manufacturers	Wound Rotors work with PowerFlex 755 drives. You must short the external resistors when using these motors.

Permanent Magnet Motors

Most permanent magnet motors are compatible with the PowerFlex 755 drive. You must obtain the motor manufacturer's specification for the motor prior to contacting Rockwell Automation Technical Support.

PowerFlex 755 drives cannot accept a resolver. Therefore, the motors must have either a pulse encoder or absolute feedback device (for example, SSI, Heidenhain, Stegmann/Sick hyperface).

This list contains the name of manufacturers that produce motors that are recommended for use with PowerFlex 755 drives.

Manufacturer	Notes
Baldor Electric Company	Work well with PowerFlex 755 drives. Verify that you are using either the Surface Mount (SM) or Interior Mounted (IPM) motors and select the appropriate control algorithm.
KollMorgan	Work well with PowerFlex 755 drives.
Oswald Electric Motors	
PowerTec	Work well with PowerFlex 755 drives, but cannot use resolver feedback.
Rockwell Automation	MPL, MPM, and RDB motors work well with PowerFlex drives. Use Heidenhain feedback for RDB motors.

Compatible HPK Motors

The following table contains a list of specifications for Bulletin HPK-Series™ high-power asynchronous motors that are compatible with PowerFlex 750-Series drives. This information is provided to help configure PowerFlex 750-Series drives with the appropriate motor data.

Cat. No.	Base Speed	KW	Volts	Amps	Hz	Torque (N•m)	Peak Torque (N•m)	Peak Amps	IM Amps	R1	R2	X1	X2	Xm
HPK-B1307C-MA42AA	1465	17.1	400	34.2	50	112	260	80	15.8	0.181	0.119	0.65	0.704	14.7
HPK-B1307C-SA42AA	1465	17.1	400	34.2	50	112	260	80	15.8	0.181	0.119	0.65	0.704	14.7
HPK-B1307E-MA42AA	2970	29.8	405	57.5	100	96	165	104	26.1	0.0485	0.0338	0.371	0.423	8.79
HPK-B1307E-MB44AA	2970	29.8	405	57.5	100	96	165	104	26.1	0.0485	0.0338	0.371	0.423	8.79
HPK-B1307E-MC44AA	2970	29.8	405	57.5	100	96	165	104	26.1	0.0485	0.0338	0.371	0.423	8.79
HPK-B1307E-SA42AA	2970	29.8	405	57.5	100	96	165	104	26.1	0.0485	0.0338	0.371	0.423	8.79
HPK-B1307E-SB44AA	2970	29.8	405	57.5	100	96	165	104	26.1	0.0485	0.0338	0.371	0.423	8.79
HPK-B1308E-MA42AA	2970	33.5	405	64.8	100	115	230	135	28.8	0.037	0.0275	0.296	0.364	7.71
HPK-B1308E-MB44AA	2970	33.5	405	64.8	100	115	230	135	28.8	0.037	0.0275	0.296	0.364	7.71
HPK-B1308E-SA42AA	2970	33.5	405	64.8	100	115	230	135	28.8	0.037	0.0275	0.296	0.364	7.71
HPK-B1308E-SB44AA	2970	33.5	405	64.8	100	115	230	135	28.8	0.037	0.0275	0.296	0.364	7.71
HPK-B1609E-MA42AA	2965	48.4	405	88.2	100	156	270	154	31.4	0.0326	0.0227	0.288	0.319	7.23
HPK-B1609E-SA42AA	2965	48.4	405	88.2	100	156	270	154	31.4	0.0326	0.0227	0.288	0.319	7.23
HPK-B1609E-SB44AA	2965	48.4	405	88.2	100	156	270	154	31.4	0.0326	0.0227	0.288	0.319	7.23
HPK-B1609E-X169	2965	48.4	460	88.2	154	156	270	154	154	154	154	154	154	154
HPK-B1611E-MA42AA	2975	57	408	105.7	100	183	400	240	47.6	0.0205	0.0152	0.167	0.219	4.82
HPK-B1611E-MB44AA	2975	57	408	105.7	100	183	400	240	47.6	0.0205	0.0152	0.167	0.219	4.82
HPK-B1611E-SA42AA	2975	57	408	105.7	100	183	400	240	47.6	0.0205	.0.0152	0.167	0.219	4.82
HPK-B1613E-MA42AA	2970	73.7	407	135.3	100	237	520	312	54.5	0.0164	0.0127	0.136	0.179	4.21
HPK-B1613E-MB44AA	2970	73.7	407	135.3	100	237	520	312	54.5	0.0164	0.0127	0.136	0.179	4.21
HPK-B1613E-SA42AA	2970	73.7	407	135.3	100	237	520	312	54.5	0.0164	0.0127	0.136	0.179	4.21
HPK-B1613E-SB44AA	2970	73.7	407	135.3	100	237	520	312	54.5	0.0164	0.0127	0.136	0.179	4.21

Cat. No.	Base Speed	KW	Volts	Amps	Hz	Torque (N•m)	Peak Torque (N•m)	Peak Amps	IM Amps	R1	R2	X1	X2	Xm
HPK-B2010E-MA42BA	2985	112	400	216	100	358			35	0.00519	0.00419	0.0626	0.097	2.03
HPK-B2010E-SA42BA	2985	112	400	216	100	358			35	0.00519	0.00419	0.0626	0.097	2.03
HPK-E1308E-MA42AA	2975	33.5	330	80	100	108	216	160	39	0.0233	0.0176	0.189	0.242	4.92
HPK-E1308E-MB44AA	2975	33.5	330	80	100	108	216	160	39	0.0233	0.0176	0.189	0.242	4.92
HPK-E1308E-MC44AA	2975	33.5	330	80	100	108	216	160	39	0.0233	0.0176	0.189	0.242	4.92
HPK-E1308E-SA42AA	2975	33.5	330	80	100	108	216	160	39	0.0233	0.0176	0.189	0.242	4.92
HPK-E1308E-SB44AA	2975	33.5	330	80	100	108	216	160	39	0.0233	0.0176	0.189	0.242	4.92
HPK-E1308E-SC44AA	2975	33.5	330	80	100	108	216	160	39	0.0233	0.0176	0.189	0.242	4.92
HPK-E1609E-MA42AA	2965	48.4	405	88.2	100	108	216	160	39	0.0233	0.0176	0.189	0.242	4.92
HPK-E1613E-SA42AA	2975	73.7	400	172	385	237	520	385	385	385	385	385	385	385

Third-Party Permanent Magnet Motors

The PowerFlex 755 drive can support third-party permanent magnet motors without the need of custom profiles. However, the motor nameplate information sometimes needs to be modified. Rockwell Automation Technical Support requires the following information to assist you in modifying the motor data for use with the drive. Please complete the following tables and email the information to Rockwell Automation Technical Support at: support@drives.ra.rockwell.com.

Table 27 - Permanent Magnet Motor Specifications and Evaluation

Motor Manufacturer	
Model Number	

Feedback Device		
Type of Feedback		If resolver, please complete resolver information
Feedback Manufacturer		
Feedback Model Number		

Technical Specifications					
Item	**Symbol**	**Value**	**Units**	**Notes**	
Maximum Mechanical Speed	n		rpm		
Continuous Stall Torque	Ms		Nm	(RMS not 0-peak)	
Continuous Stall Current	A		A	(RMS not 0-peak)	
Peak Torque	Mj		Nm	(RMS not 0-peak)	
Torque Weight Ratio	Tw		Nm/Kg		
EMF Constant	Ke		Vs/rad		Vs/1000rpm
Torque constant	Kt		Nm/A		
Reluctance Torque (with respect to Stall Torque)	Tr		Nm		
Winding Resistance	R		Ohms		line to line
Winding Inductance	L		mH		line to line
Rotor Inertia	J		kg-m2		
Mechanical Time Constant	Tm		ms		
Electrical Time Constant	Te		ms		
Mass	M		Kg		
Radial Load	Fr		N		
Axial Load	Fa		N		
Insulation					
Protection					

Motor Nameplate Voltage	V		Volts	
Motor Nameplate Power	Pwr		KW	
Poles	p			

Table 28 - Drive Motor Parameter Values

Parameter	Value	Units
P1: Motor Nameplate volts Vrms		Volts
P2: Motor Nameplate Amps		Amps
P3: Motor Nameplate Frequency		HZ
P4: Motor Nameplate RPM		RPM
P5: Motor Name Plate Power		KW
P7: Pole Pairs		

Zpu		
IXO Voltage drop		Volts
IR Voltage Droop		Volts
P523 Back Emf		Volts

Provide a Speed Torque profile like in this example.

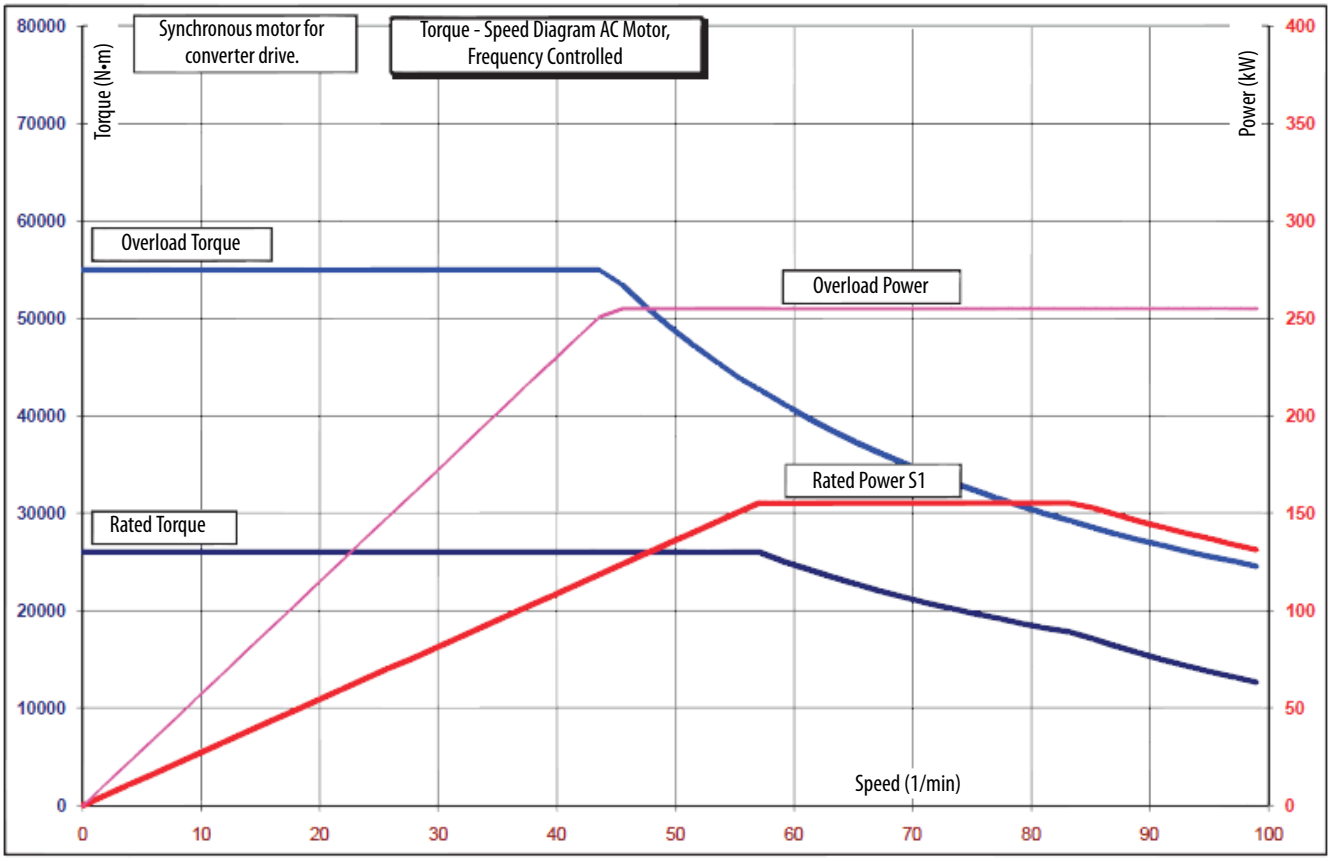

System Tuning

When using the Integrated Motion on the Ethernet/IP Network connection with the PowerFlex 755 drive, the tuning of the motion system is accomplished via the Logix Designer application. This topic describes the axis hookup tests, motor tests, and autotuning of the motion system required to measure the system inertia. Manual tuning of the axis is also described in this section:

- For additional information on axis attributes and the Control Modes and Methods, see the Integrated Motion on the Ethernet/IP Network Reference Manual, publication MOTION-RM003.
- For start-up assistance of a Integrated Motion on the EtherNet/IP Network Axis, see the Integrated Motion on the Ethernet/IP Network Configuration and Startup User Manual, publication MOTION-UM003.

This topic assumes that you have completed all the steps necessary to configure the drive module.

Axis Hookup Tests

The axis Hookup tests are the first tests to run when autotuning an axis. If you are using a permanent magnet motor in your application, the Commutation test must be run first, as part of the Hookup tests.

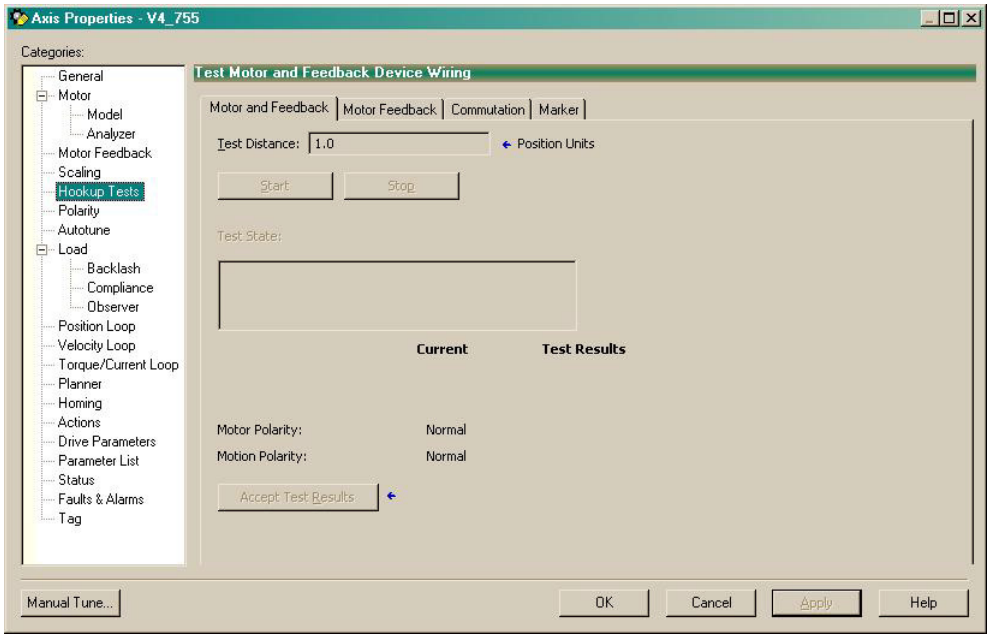

Motor and Feedback: This test is used to run the motor and verify the correct direction of rotation, and also tests the motor feedback for the proper direction:

- The Test Distance value can be defined to be sure that the system does not rotate too far.
- Click Start to initiate the test. The test completes and prompts you to verify that the motor rotation direction was correct.

- When the test has been completed, click Accept Test Results to save the results.

Motor Feedback: This test is used to test the polarity of the motor feedback:

- Click Start and manually rotate the motor in the positive direction for the distance indicated in the Test Distance box.
- When the test has been completed, click Accept Test Results to save the results.

Commutation: When using a permanent magnet motor, this test must be run first. The Commutation test is used to measure the commutation offset angle for the permanent magnet motor.

- When the test has been completed, click Accept Test Results to save the results.
- Use the resulting Controller Offset value.

Marker: This test is used to check for the marker pulse on an incremental encoder:

- Click Start and manually move the motor until a marker pulse is detected.
- When the marker pulse is detected the test stops. Click Accept Test Results to save the results.

Motor Analyzer

The Motor Analyzer category offers three choices for calculating or measuring motor electrical data.

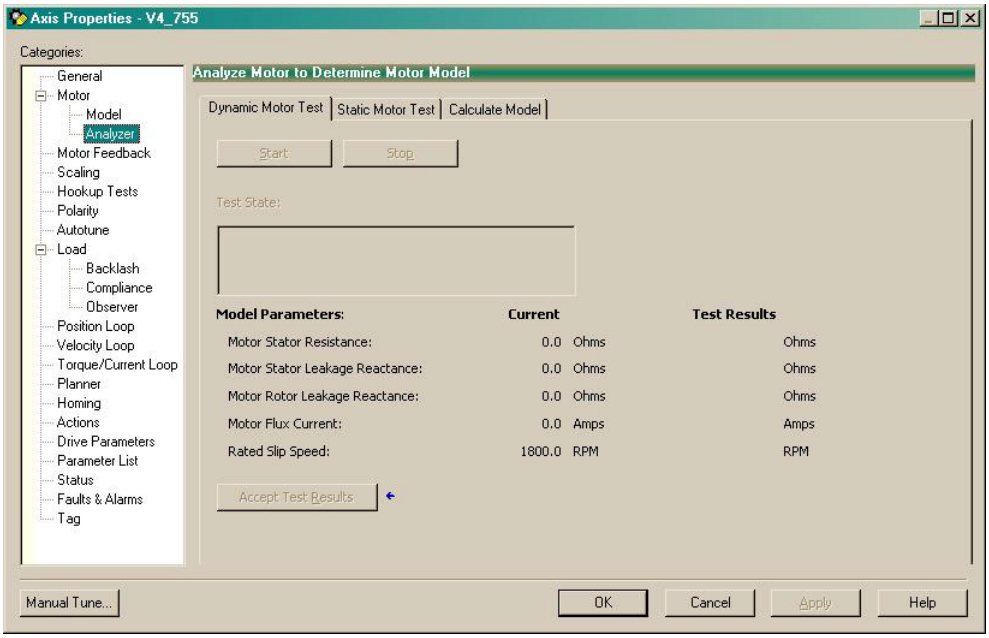

Dynamic Motor Test: This test is the most accurate test method to determine the motor model parameters. When this test is run the Resistance and Reactance

are measured then the motor is rotated to measure the flux current of the Induction motor. The Rated Slip frequency is also calculated:

- This test is best run with the motor disconnected from the load as the motor spins for some time and there are no travel limits.
- When the test has been completed, click Accept Test Results to save the results.

Static Motor Test: This test is used if the motor cannot rotate freely or is already coupled to the load. When this test is run the Resistance and Reactance are measured then the flux current of the motor is calculated. The Rated Slip frequency is also calculated:

- The motor will not turn during this test.
- When the test has been completed, click Accept Test Results to save the results.

Calculate Model: This method calculates the Resistance, Reactance, and Flux Current of the motor from basic model parameters and the motor parameters data. No measurements are taken when using this calculation:

- Click Start to start the calculation.
- When the test has been completed, click Accept Test Results to save the results.

Autotune (inertia test)

The Autotune category measures the system inertia and calculates system bandwidth tuning numbers. This table summarizes the application type tuning defaults. An "X" indicates that the system value is selected by default and that the Velocity and Acceleration Feedforward values are set to 100%.

Application Type	System Value						
	Position Loop Bandwidth	Position Integrator Bandwidth	Velocity Loop Bandwidth	Velocity Integrator Bandwidth	Integrator Hold	Velocity Feedforward	Acceleration Feedforward
Custom: (Advanced tuning)	X		X				
Basic: (Default tuning parameters)	X		X				
Tracking: (Winding/unwinding, flying shear, and web control applications)	X		X	X		X	X
Point-to-Point: (Pick-and-place, packaging, cut-to-length)	X	X	X		X		
Constant Speed: (Conveyors, line shaft, crank)	X		X	X		X	

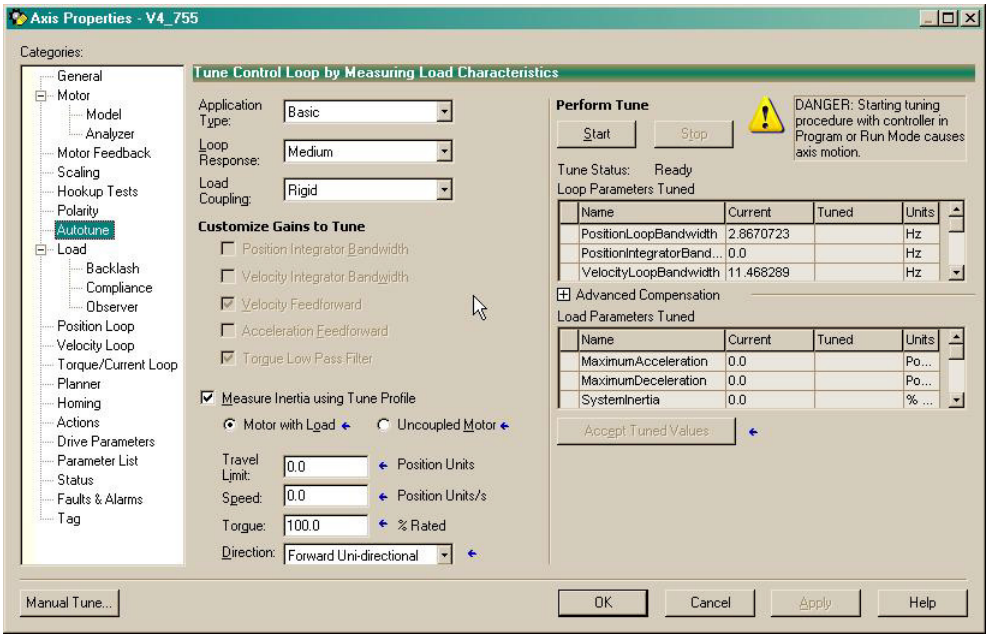

Application Type: Specify the type of motion control application to be tuned:

- **Custom:** This option lets you select the type of gains to use in the system. You can individually select gains to be used with the check boxes that display below Customize Gains to Tune heading.
- **Basic:** This selection is used for applications where following error and final position is not critical. Basic tuning gains include Position Loop proportional and Velocity Loop proportional.
- **Tracking:** This selection provides the most aggressive tuning. It is used to keep following error to a minimum and applies to both Velocity Feedforward and Acceleration Feedforward. This tuning selection uses Position Loop proportional, Velocity Loop proportional, and Velocity Loop integral.
- **Point to Point:** This selection is used for applications that use a move-to-position and do not need to include a following error. Tuning gains for this selection include Position Loop proportional, Position Loop integral, and Velocity Loop proportional.
- **Constant Speed**: This selection is used for constant speed applications. It is designed to keep velocity error to a minimum. It applies both Velocity Feedforward and uses Position Loop proportional, Velocity Loop proportional and Velocity Loop integral.

Loop Response: The Loop Response attribute is used to determine the responsiveness of the control loops. Specifically, the Loop Response attribute is used to determine the value for the Damping Factor (Z) used in calculating individual gain values:

- High = 0.8
- Medium = 1.0
- Low = 1.5

Load Coupling: The Load Coupling attribute is used to determine how the loop gains are de-rated based on the Load Ratio.

In high performance applications with relatively low Load Ratio values or rigid mechanics, typically Rigid is selected. The gains are not de-rated.

For applications with relatively high Load Ratios and compliant mechanics, Compliant is selected. The autotune algorithm divides the nominal loop bandwidth values by a factor of the Load Ratio + 1.

Measure Inertia using Tune Profile: Check this box to calculate the inertia tuned values as part of the autotune. The Inertia Test results are shown in the Inertia Tuned grid control (bottom right of the dialog box) when the test completes.

When Measure Inertia using Tune Profile is selected as a part of the Autotune test, the PowerFlex 755 drive first jogs or rotates the motor in a single direction to remove any backlash present in the system (as depicted in the chart below). After the backlash has been removed, the "bump" profile is then applied to measure the system inertia (system acceleration). Note that systems with a mechanical restriction or travel limit may not complete the Autotune test.

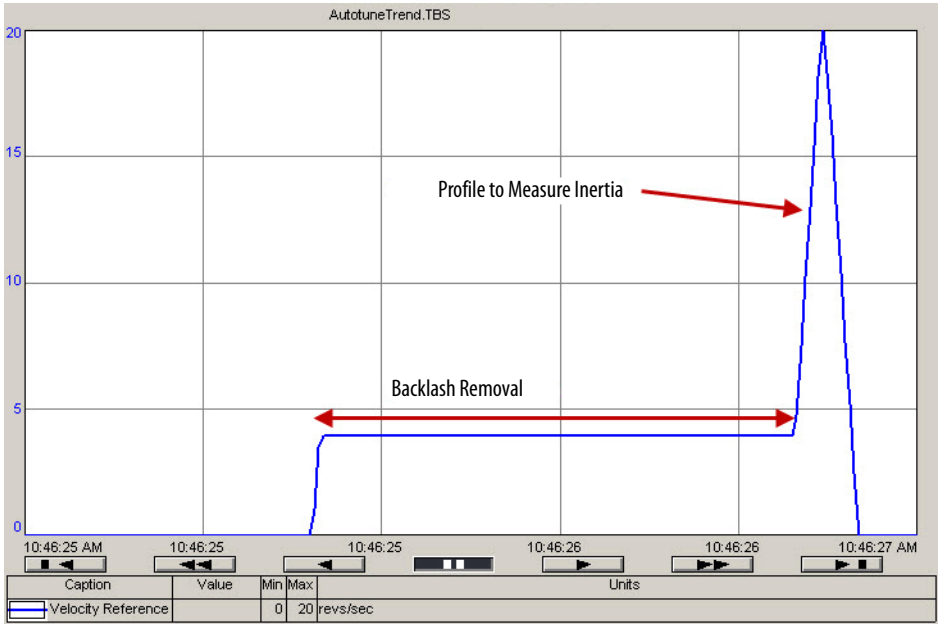

- **Motor with Load:** Choose this selection to calculate tuning values based on the load inertia. If selected, the load inertia is measured and then applied to the Total Inertia attribute or Total Mass attribute. The Load Ratio is also updated.

- **Uncoupled Motor:** Choose this selection to calculate tuning values based on the motor inertia. If selected, the motor inertia is measured during the test and is stored in the Rotary Motor Inertia attribute.

- **Travel Limit:** Enter a value that specifies the maximum distance to travel for the selected tune operation when the system has a limited travel distance. If the tuning test cannot complete within the distance specified the tune fails and faults the axis.

- **Speed:** Enter a value that specifies the speed of the tune operation. A speed that translates to a minimum of 25% of the motor nameplate RPM is recommended.

- **Torque:** Enter a value in the range of 0...300 that specifies the torque value to be applied to the tune operation. The default value is 100.

- **Direction:** Choose the direction of the move for the tune operation. The available values include:

  - Forward Unidirectional (default)
  - Reverse Unidirectional
  - Forward Bi-Directional
  - Reverse Bi-Directional

Run the Autotune

To start the autotune procedure, click Start:

- When the Measure Inertia using Tune Profile check box is selected, the request to start a tune is issued to the controller.
- Any pending edits in this dialog box need to be applied before you start the test. If you have pending edits, a message box appears informing you that pending edits are applied prior to executing the test. Click Yes to apply the pending edits. If you choose No, the test is not be executed.
- Clicking Start issues a Motion Direct command to the controller, which causes any parameters used by the motion direct command to validate before starting the test.
- If the Motion Direct command does not execute due to an error condition, an error message appears and the Test State returns to the Ready state.
- Click Stop to terminate an autotune operation that was started from a source other than Start on this Autotune dialog box. When an Autotune is started from Start on this dialog box, Stop is unavailable.

When the autotune has completed, click Accept Tuned Values to accept the tuning results and before you can change any tuning categories.

Manual Tune

The Integrated Motion on the Ethernet/IP network axis includes a method for manual tuning the axis gains. Clicking Manual Tune (as indicated in the example here) opens the Manual Tuning window.

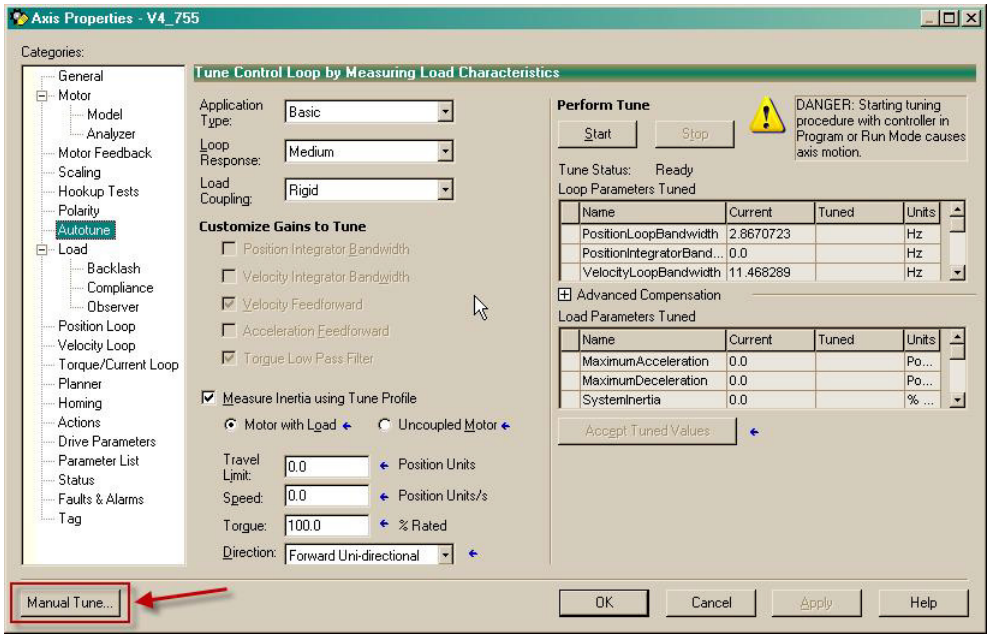

Manual Tuning Window

Tuning gains are measured in Hertz in the Integrated Motion on the Ethernet/IP network connection compared to the radians/second in the stand alone drive. 6.283185 Rad/Sec = 1 Hz.

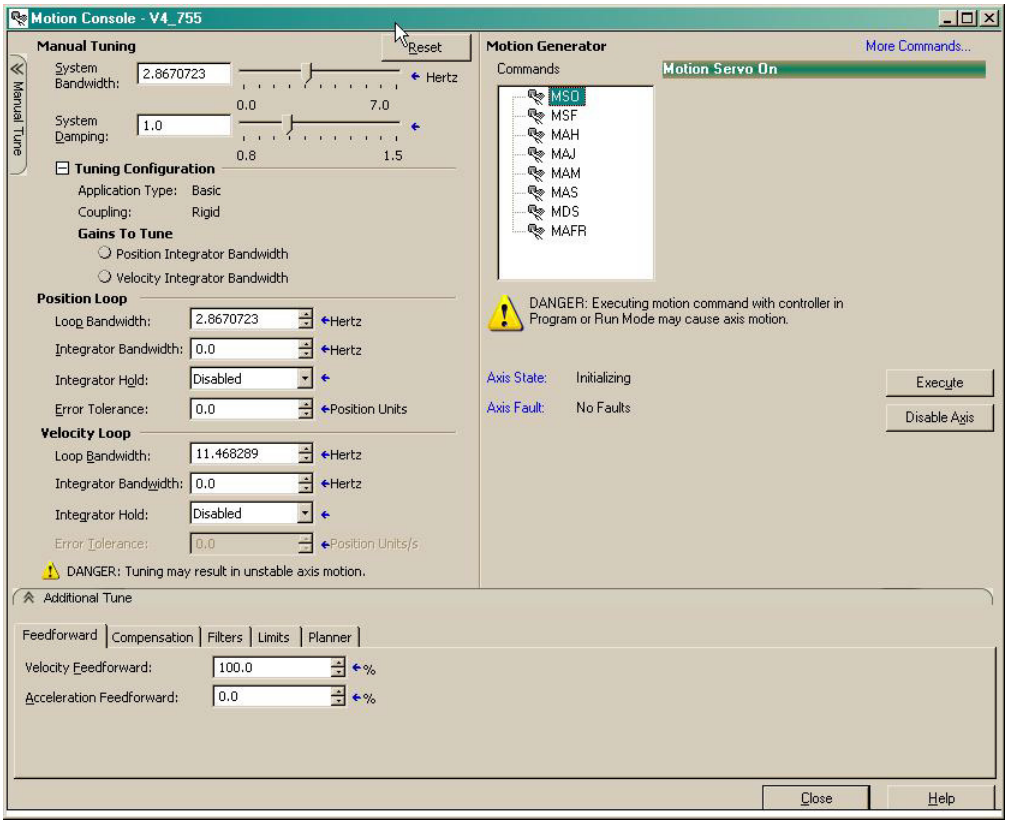

The Manual Tuning window contains three sections:

Manual Tuning Section: This section lets you customize the configuration of system tuning. The following two selections can be made:

- **System Bandwidth:** Changing this value adjusts the Position Loop and Velocity Loop response. The value selected in this field changes the Application Type selection in the Autotune window. Therefore, care must be taken to NOT change this value after the individual gains have been manually configured.

- **System Dampening:** Changing this value adjusts both the Dampening factor and System Bandwidth values. Lowering the System Dampening factor dramatically increases the System Bandwidth. Care must be taken when changing this value to avoid machine damage. It is recommended that small incremental adjustments be made to the System Dampening while evaluating the overall system response. This value changes the Application Type selection in the Autotune window. Therefore, care must be taken to NOT change this value after the individual gains have been manually configured.

- **Position Loop:** You can manually adjust the Loop Bandwidth, Integrator Bandwidth, Integrator Hold and Error Tolerance values.

- **Velocity Loop:** You can manually adjust the Loop Bandwidth, Integrator Bandwidth, Integrator Hold, and Error tolerance (when used as a Velocity Loop) values.

Motion Generator Section: The Motion Generator is a subset of the Motion Direct commands that lets you control the axis motion for tuning.

Additional Tune Section: This section enables adjustment of multiple settings of the axis properties:

- **Feedforward Tab:** Lets you adjust the Velocity Feedforward percentage and Acceleration Feedforward percentage.

- **Compensation Tab:** Lets you adjust the System Inertia percentage and Torque Offset percentage.

- **Filters Tab:** Lets you adjust the Torque Low Pass Filter Bandwidth and Torque Notch Filter Frequency.

- **Limits Tab:** Lets you adjust the Peak Torque Limit Positive / Negative percentages and Velocity Limit Positive / Negative Units per Second values.

- **Planner Tab:** Lets you adjust the Maximum Speed, Maximum Acceleration, Maximum Deceleration, Maximum Acceleration Jerk, and Maximum Deceleration Jerk values.

Using an Incremental Encoder with an MP*x* Motor

The PowerFlex 755 drive supports incremental encoder feedback when using a Rockwell Automation MP*x* motor. However, the Motor Device Specification category in the Axis Properties configuration for the Logix Designer application does not currently support MP-Series™ motors with incremental feedback catalog numbers, as shown below. Only MP-Series motors with the suffix –M (Stegmann Multi-turn Absolute), or –S (Single Turn Absolute) motors are supported.

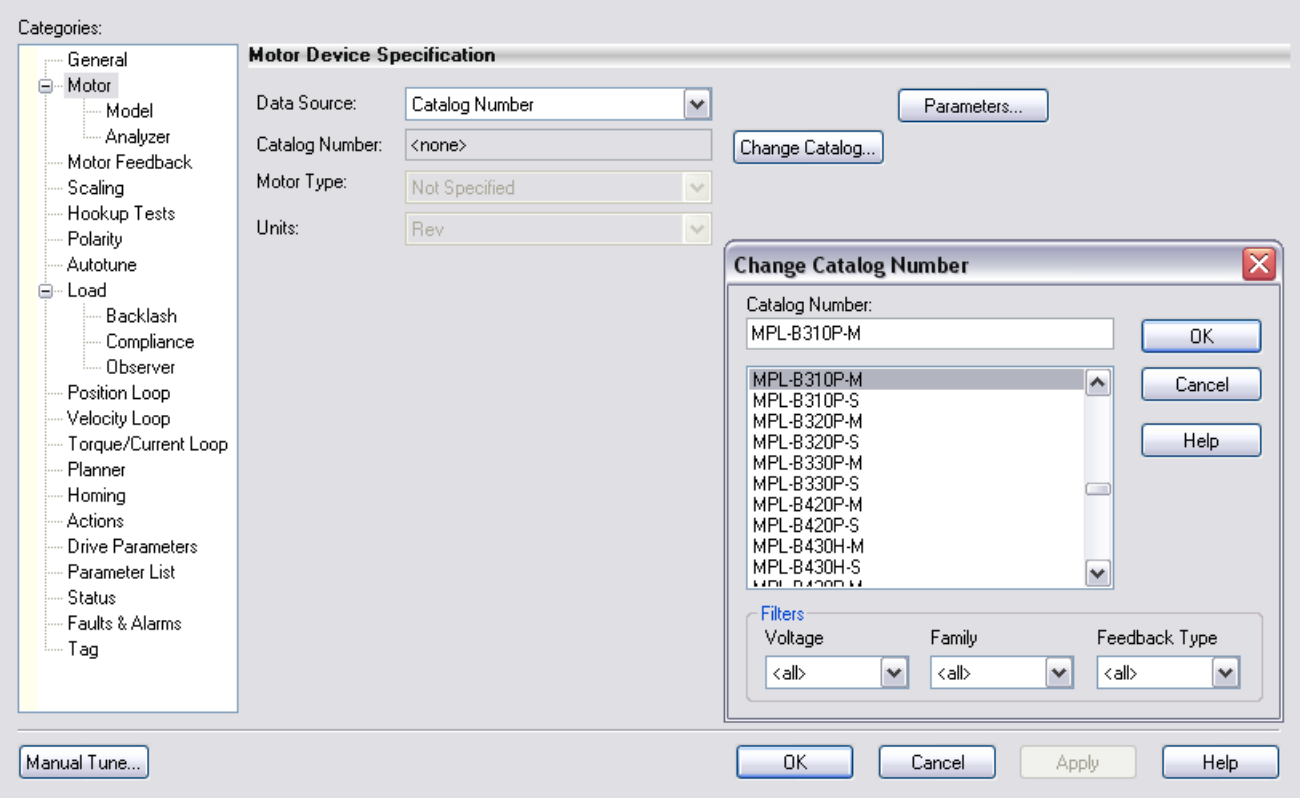

To configure a PowerFlex 755 drive with an MP*x* motor equipped with incremental encoder feedback, the MP*x* motor must be set up as a third-party motor. Follow these steps to configure an MP*x* motor with incremental encoder feedback for use with a PowerFlex 755 drive using the Integrated Motion on the EtherNet/IP Network.

1. In the Axis Properties dialog box for the drive, select these options (as shown below):
   - From the Data Source pull-down menu, choose Nameplate Datasheet.
   - From the Motor Type pull-down menu, choose Rotary Permanent Magnet.
2. You must manually enter the Nameplate / Datasheet – Phase to Phase parameters information. See Appendix D - Permanent Magnet Motors in the PowerFlex 750-Series Programming Manual, publication 750-PM001, for a list of motor nameplate specification data.

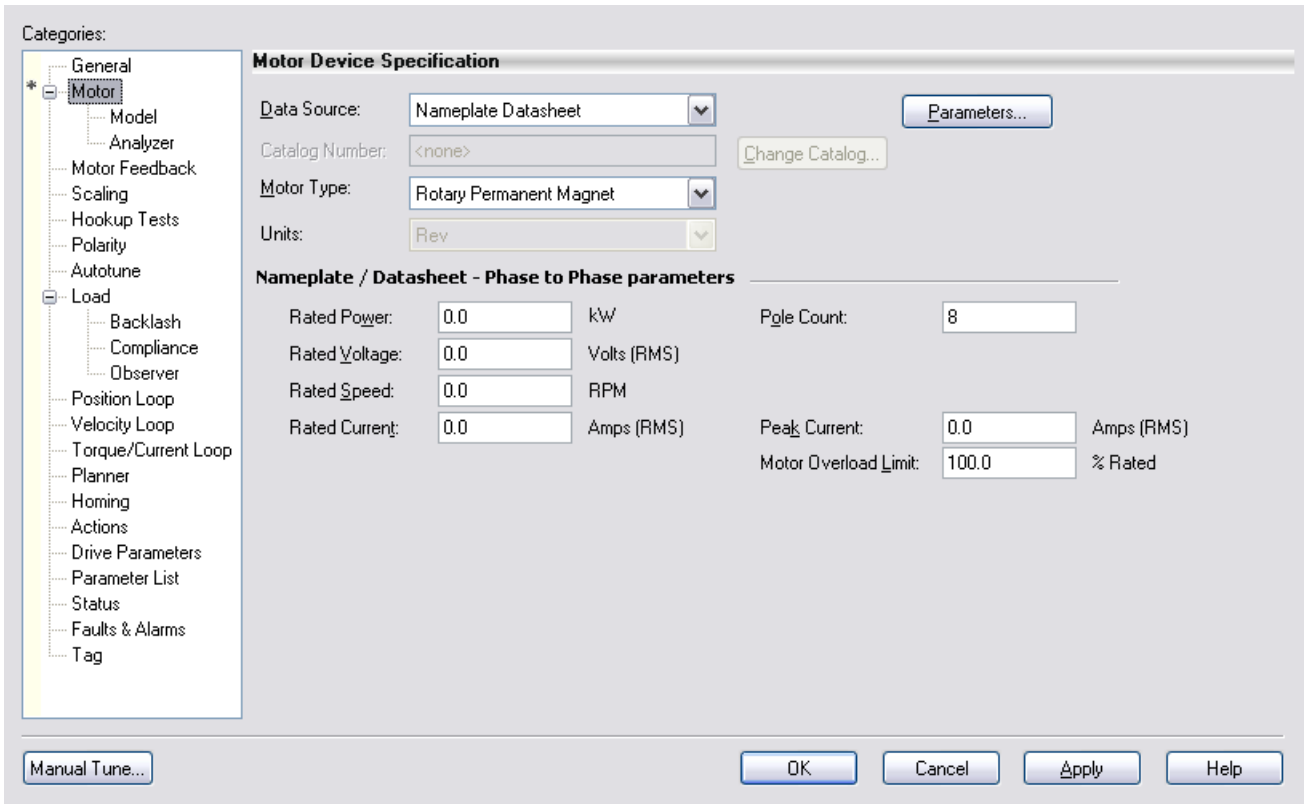

TIP If you do not have a Programming Manual readily available, from the Data Source pull-down menu, choose Catalog Number. Then, from the Motor Type pull-down menu, choose the equivalent motor with the -M (Stegmann Multi-turn Absolute) device. The Logix Designer application populates the Nameplate / Datasheet – Phase to Phase parameters information with the data that is stored in the database. Record this information for reference. Then, change the Data Source selection to "Nameplate Datasheet." The configuration is transferred to the new selection. The motor data is the same regardless of the selected feedback device.

3. Select the Motor Feedback category.
4. From the Type pull-down menu, choose Digital AqB.

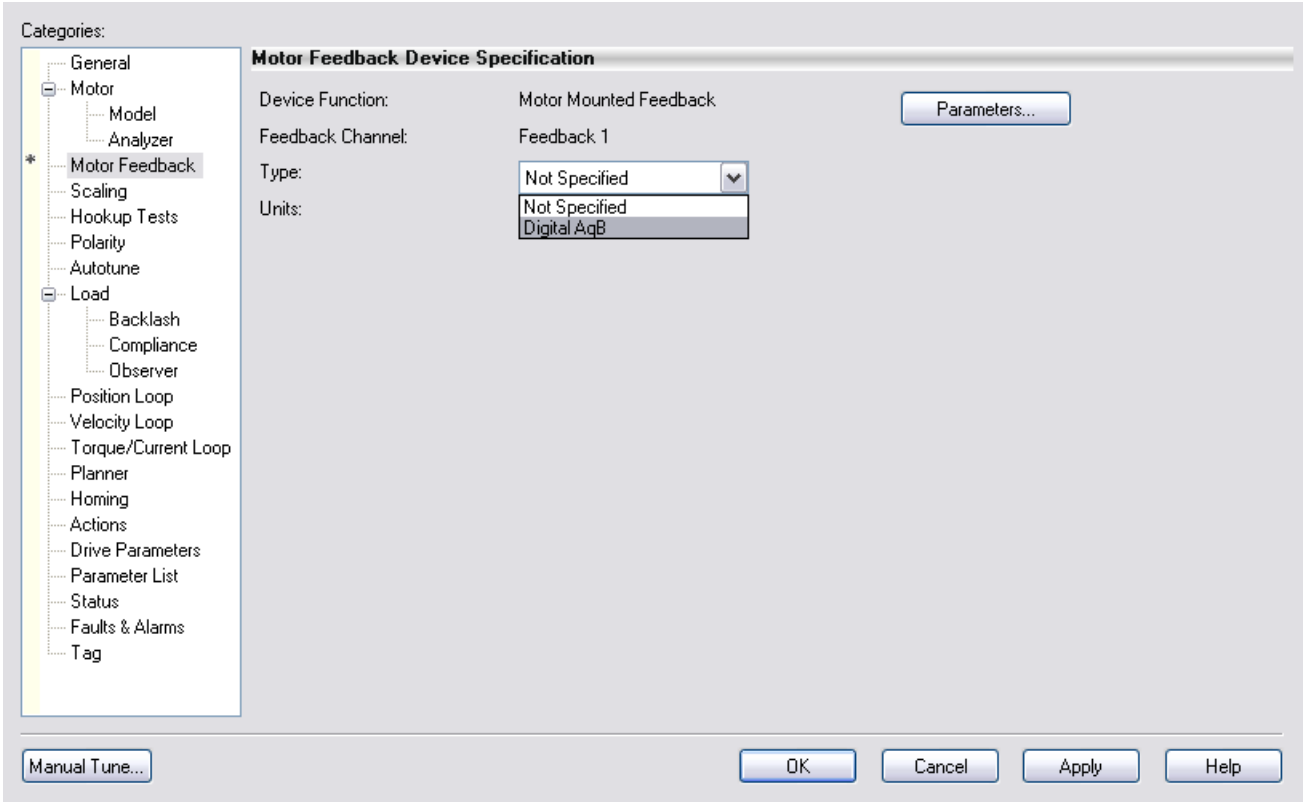

5. Click OK to save your configuration.

PowerFlex 755 Integrated Motion on the EtherNet/IP Network Block Diagrams

The block diagrams in this section highlight the Integrated Motion on the Ethernet/IP Network attributes and path used in PowerFlex 755 drives control. When viewed in electronic format (PDF), or when printed in color, the standard drive control attributes and path appear in blue and the Integrated Motion on the EtherNet/IP Network attributes appear in black and the path appears in black and uses heavier line weights.

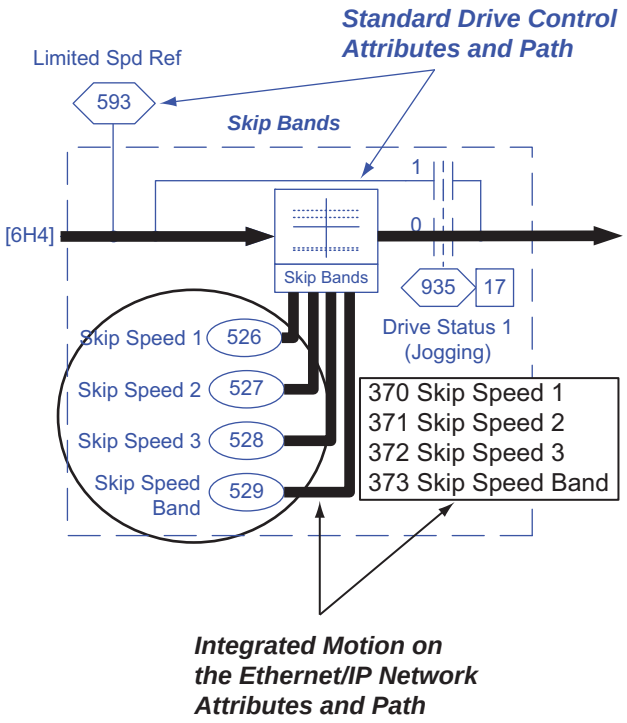

Legend and Definitions

Use the following legend and definitions when viewing the diagrams.

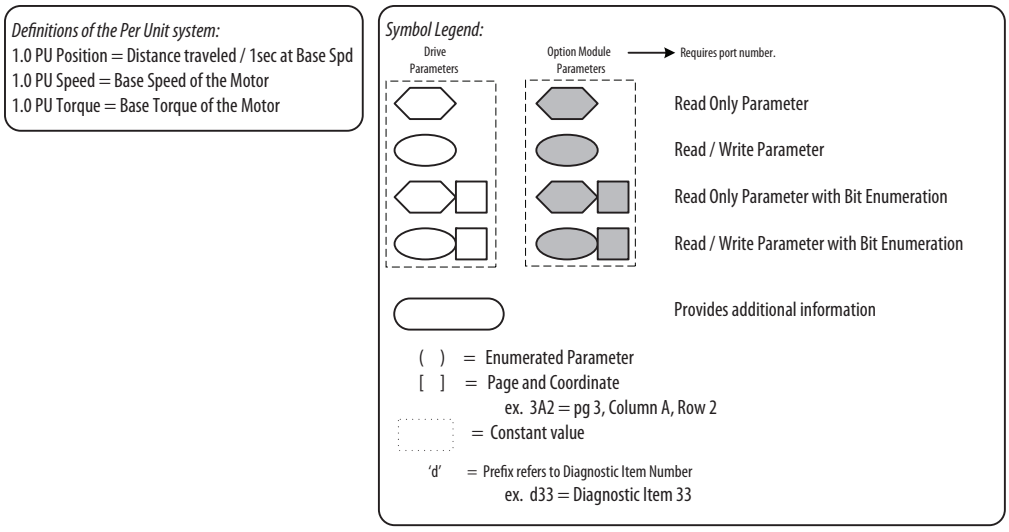

Block Diagram Table of Contents

Block Diagram	Page	Block Diagram	Page
Flux Vector Overview	377	Torque Control Overview - Interior Permanent Magnet Motor	398
VF (V/Hz), SV Overview	378	Torque Control - Reference Scale and Trim	399
Speed / Position Feedback	379	Torque Control - Torque	400
Speed Control - Reference Overview	380	Torque Control - Current, Induction Motor and Surface Permanent Magnet Motor	401
Speed Control Reference (Sheet 1)	381	Torque Control - Current, Interior Permanent Magnet Motor	402
Speed Control Reference (Sheet 2)	382	Torque Control - Inertia Adaption	403
Speed Control Reference (Sheet 3)	383	Torque Control - Load Observer / Estimator	404
Speed Control Reference (Sheet 4)	384	Process Control (Sheet 1)	405
Speed Control Reference (Sheet 5)	385	Process Control (Sheet 2)	406
Speed Control - Regulator (Flux Vector)	386	MOP Control	407
Position Control - Reference	387	Inputs and Outputs - Digital	408
Position Control - Regulator	388	Inputs and Outputs - Analog	409
Position Control - Aux Functions	389	11-Series Inputs and Outputs – Digital	410
Position Control - Phase Locked Loop	390	11-Series Inputs and Outputs – Analog	411
Position Control - Position CAM	391	11-Series Inputs and Outputs – ATEX	412
Position Control - Profiler/Indexer (Sheet 1)	392	Control Logic	413
Position Control - Profiler/Indexer (Sheet 2) / Position Control - Homing	393	Inverter Overload IT	414
Position Control / Aux Functions, Roll Position Indicator	394	Friction Compensation	415
Position Control – Spindle Orient	395	Variable Boost Voltage Overview – Function Inputs/Outputs	416
Position Control / Aux Functions, Position Oriented Torque Boost	396	Diagnostic Tools	417
Torque Control Overview - Induction Motor and Surface Permanent Magnet Motor	397	High Speed Trending Wizard	418

Flux Vector Overview

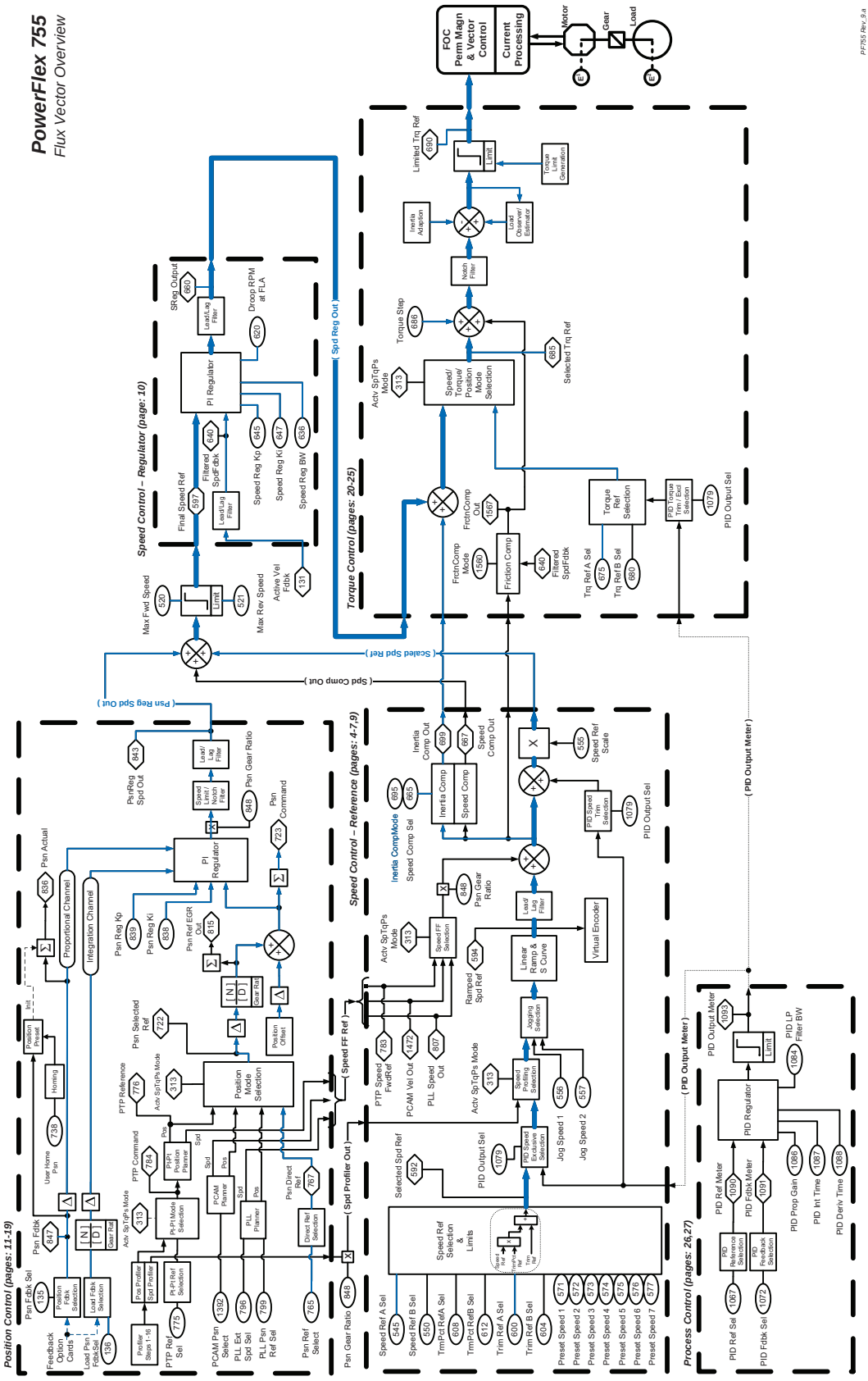

VF (V/Hz), SV Overview

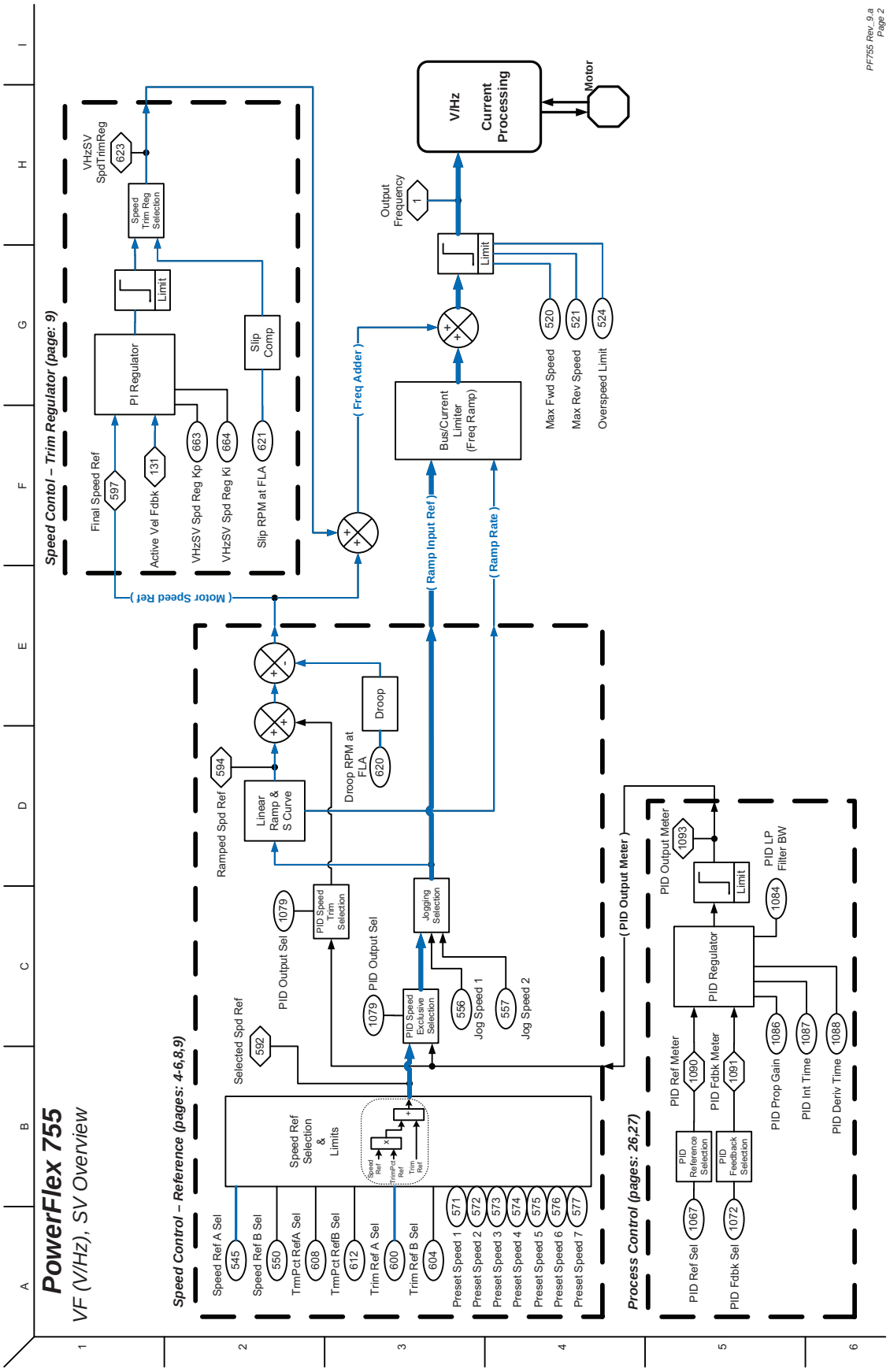

Speed / Position Feedback

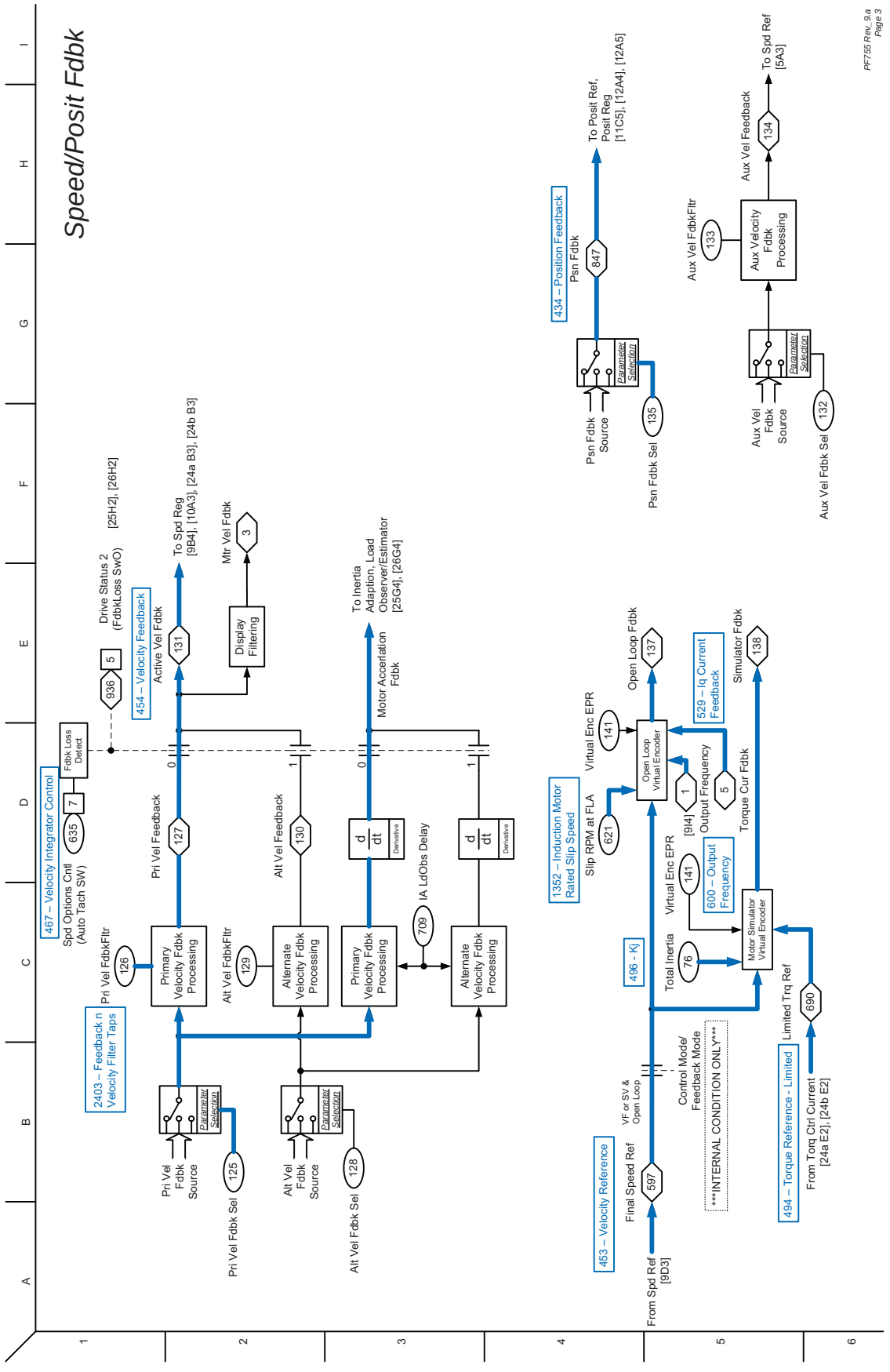

Speed Control - Reference Overview

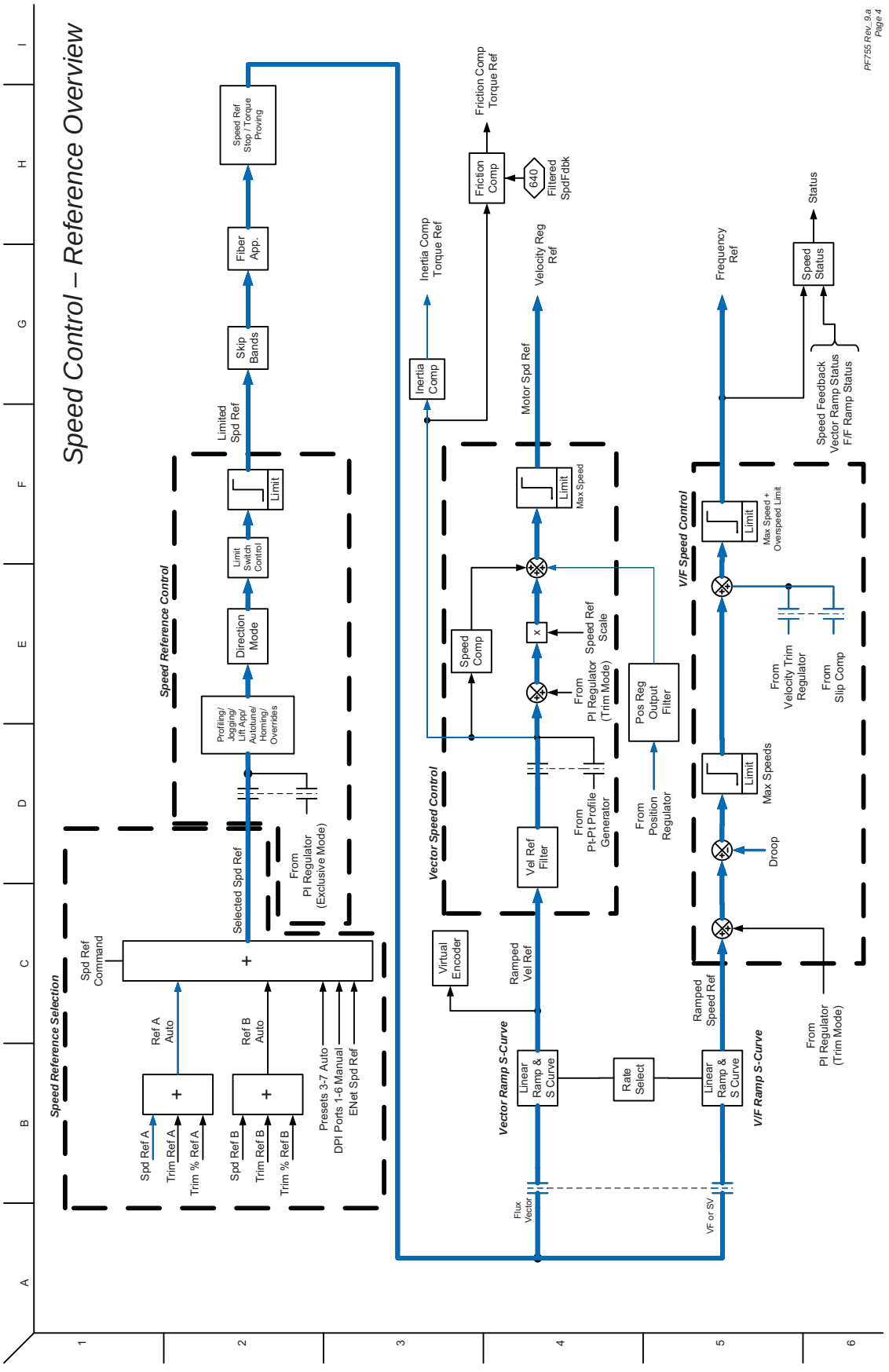

Speed Control Reference (Sheet 1)

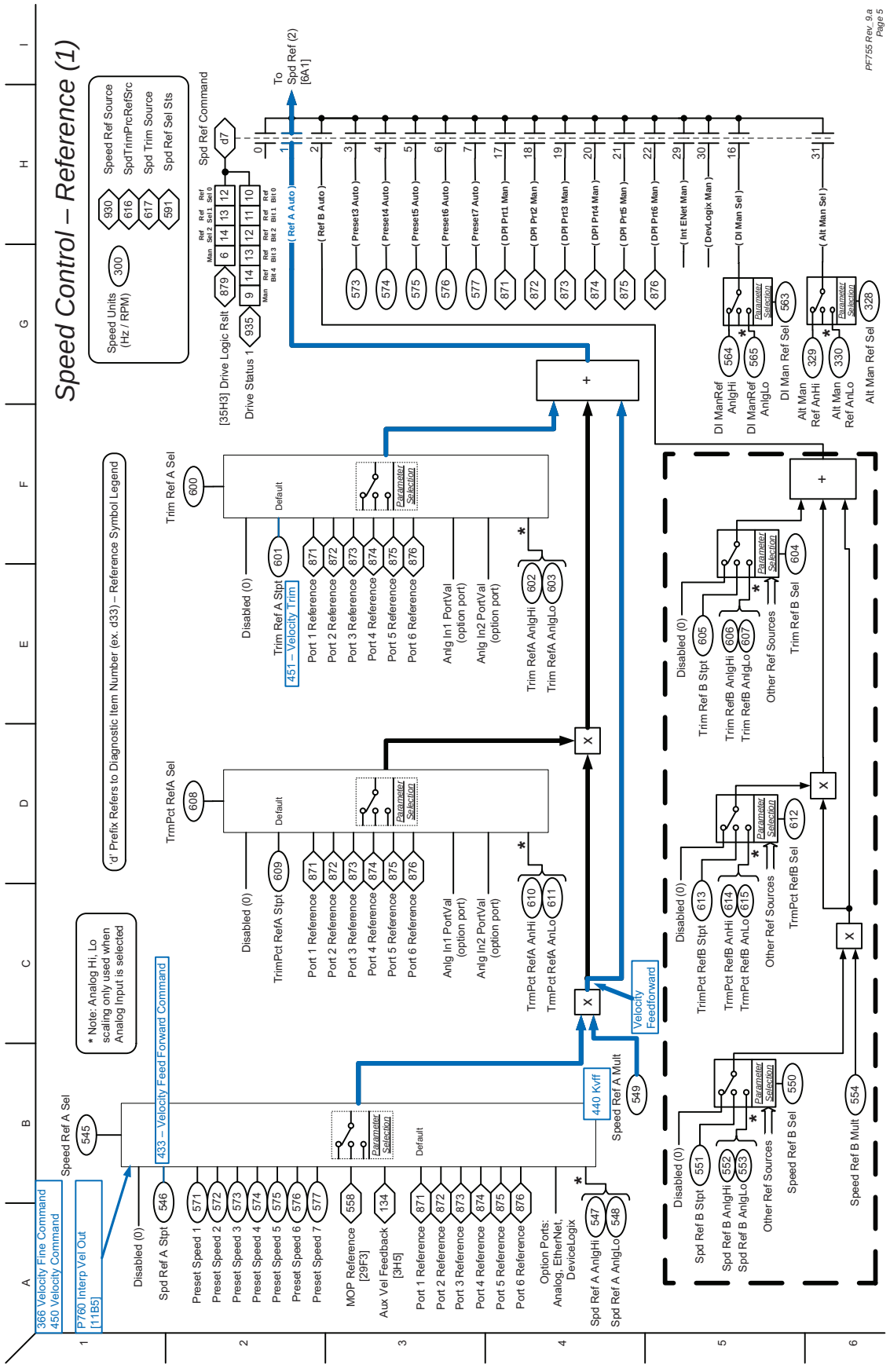

Speed Control Reference (Sheet 2)

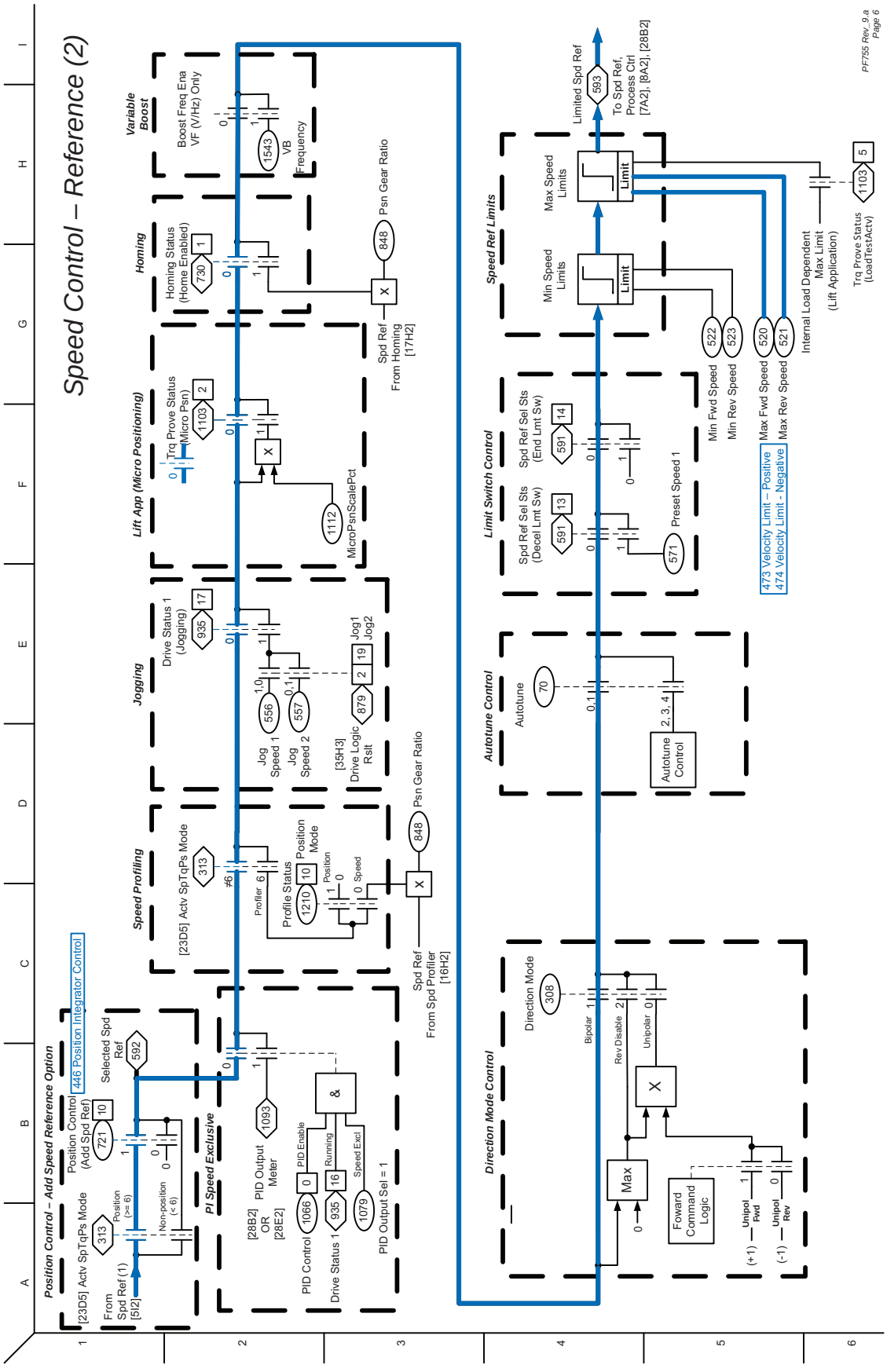

Speed Control Reference (Sheet 3)

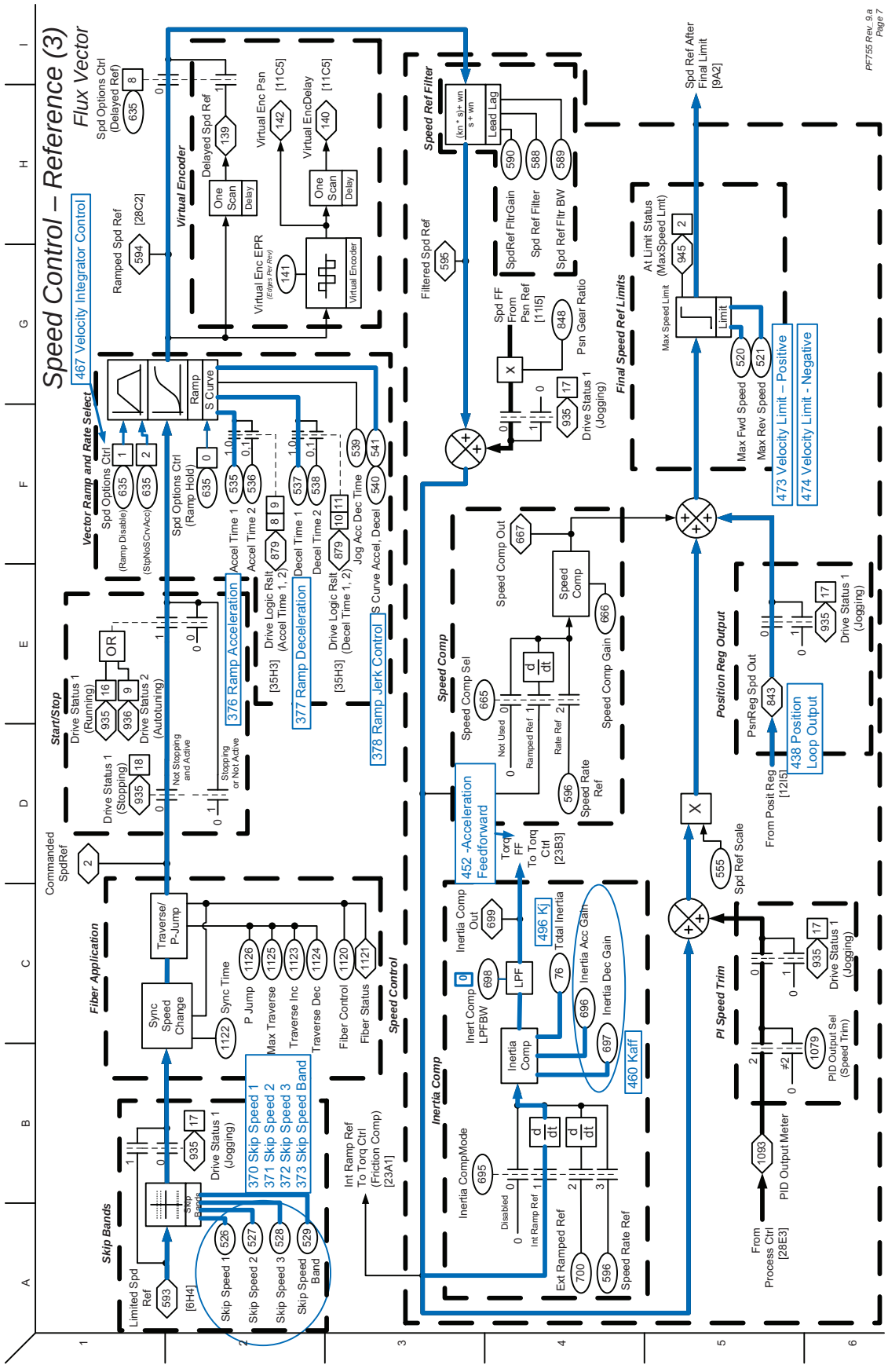

Speed Control Reference (Sheet 4)

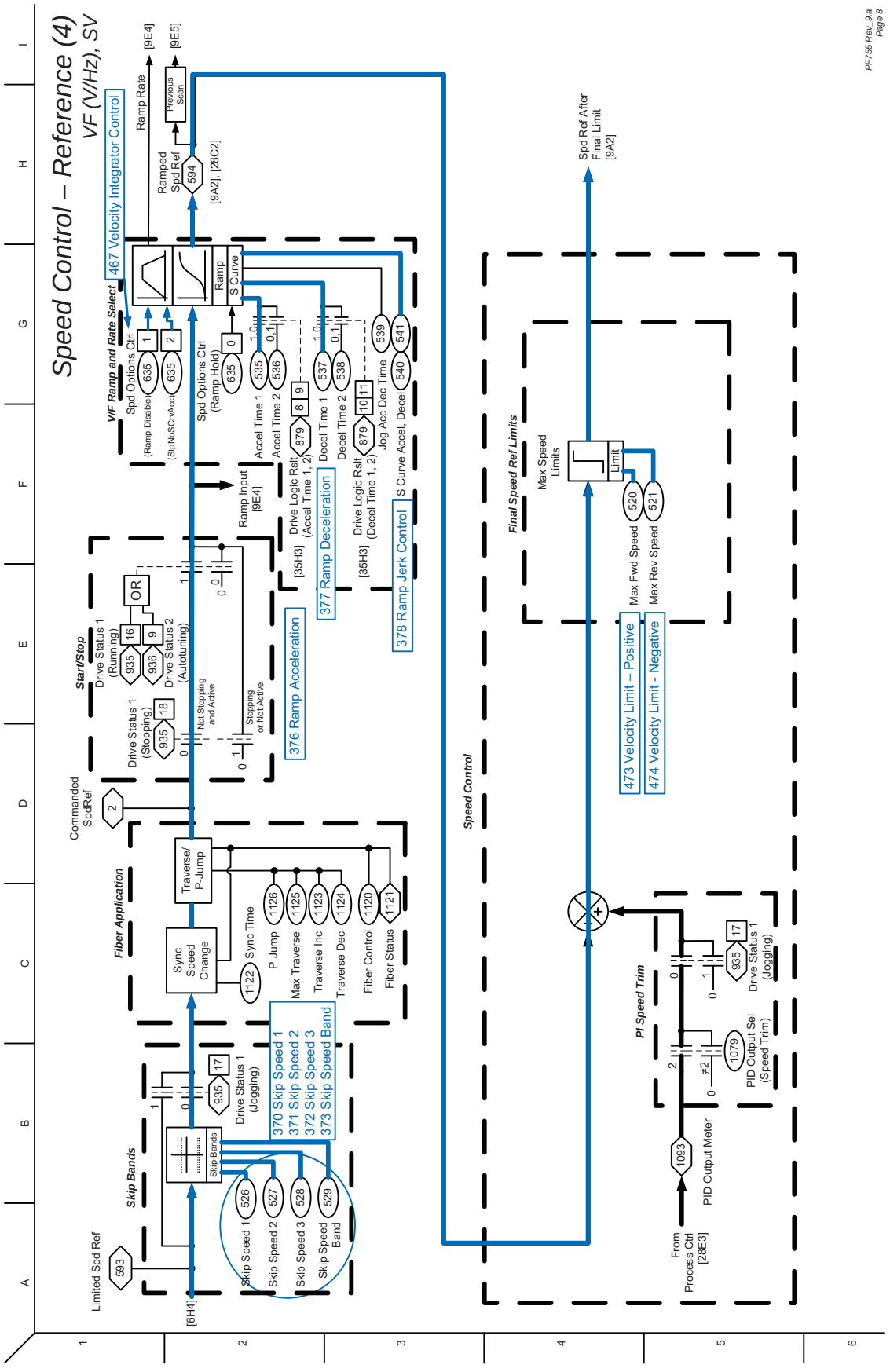

Speed Control Reference (Sheet 5)

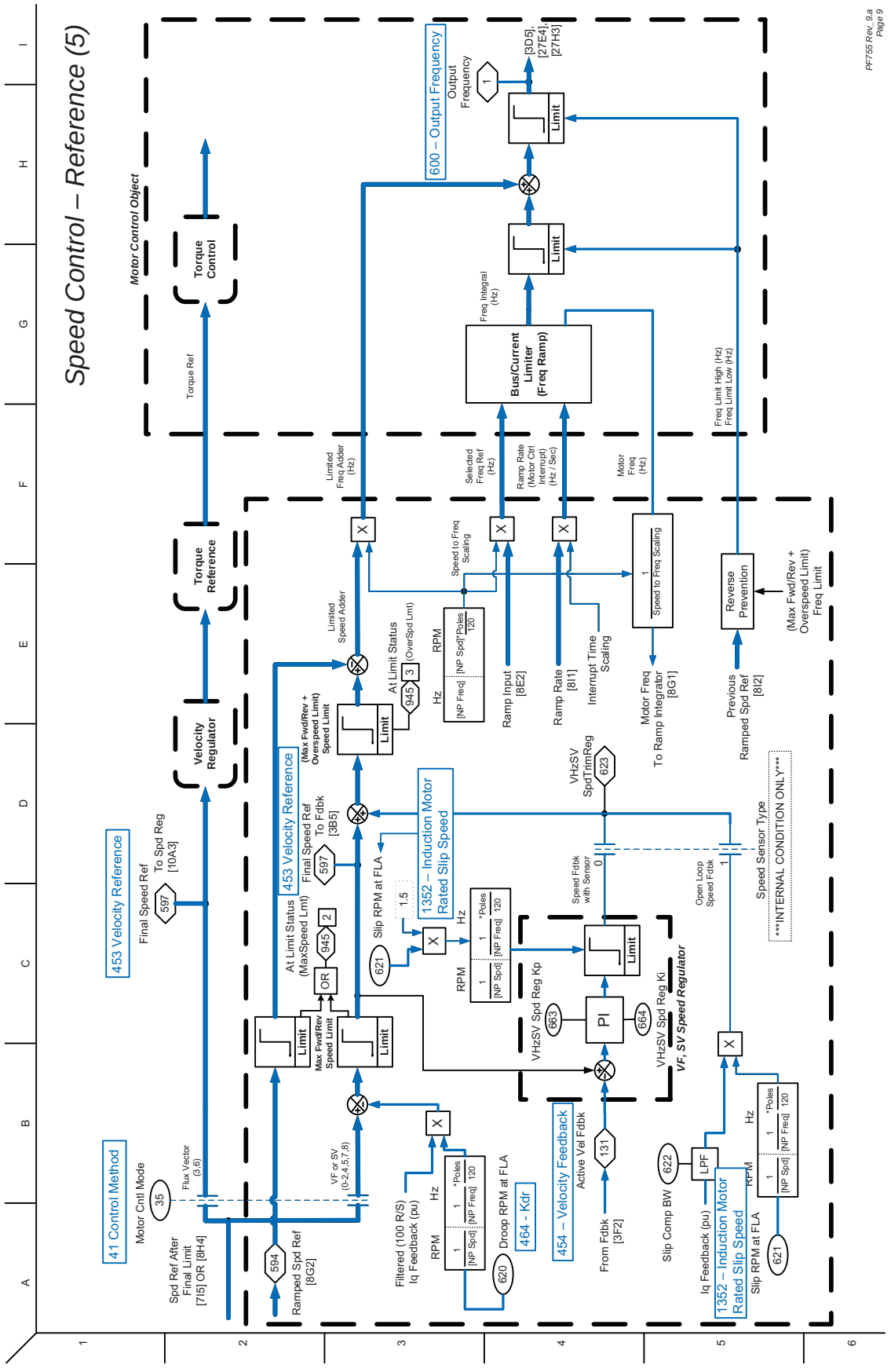

Speed Control - Regulator (Flux Vector)

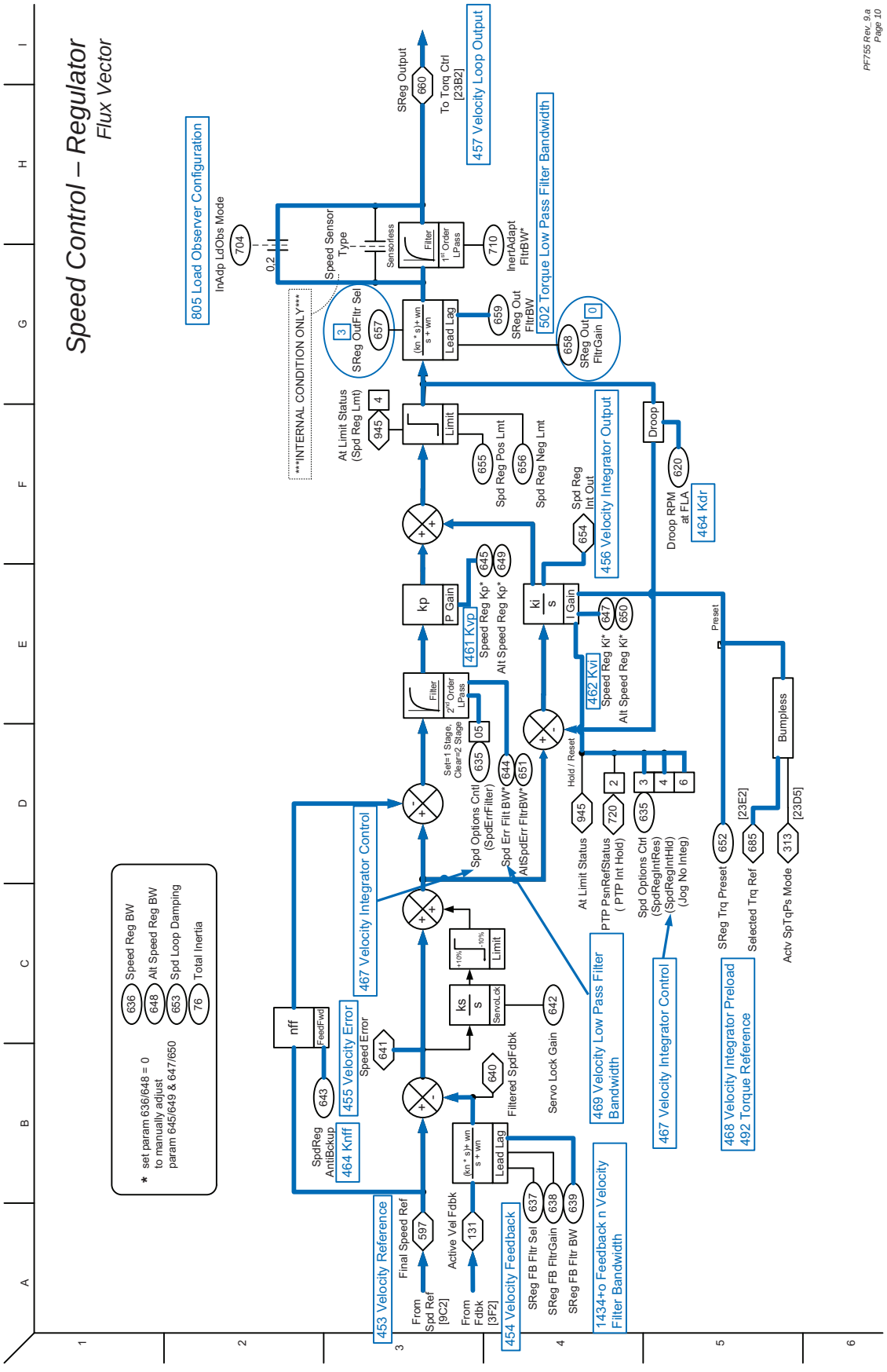

Position Control - Reference

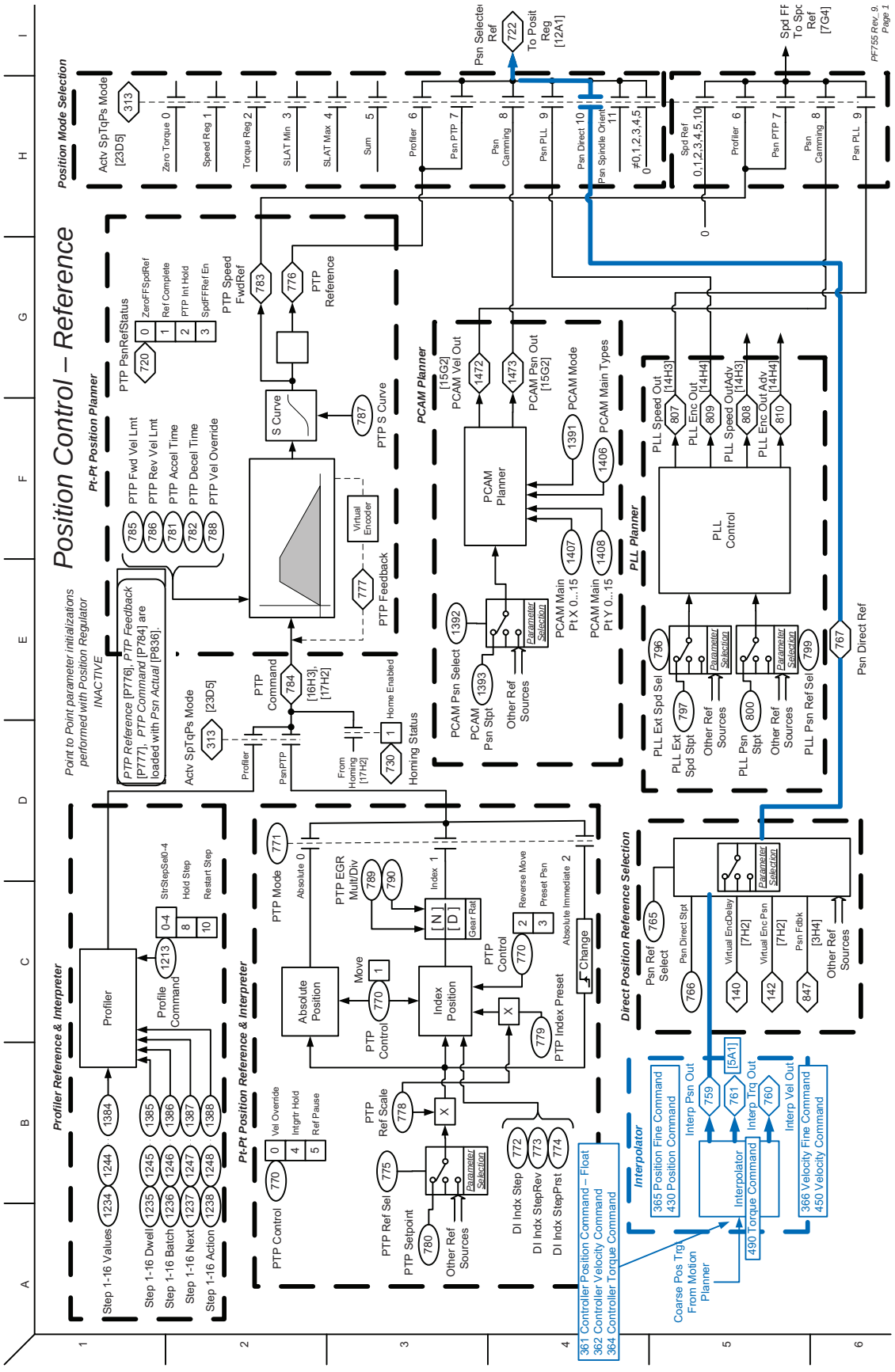

Position Control - Regulator

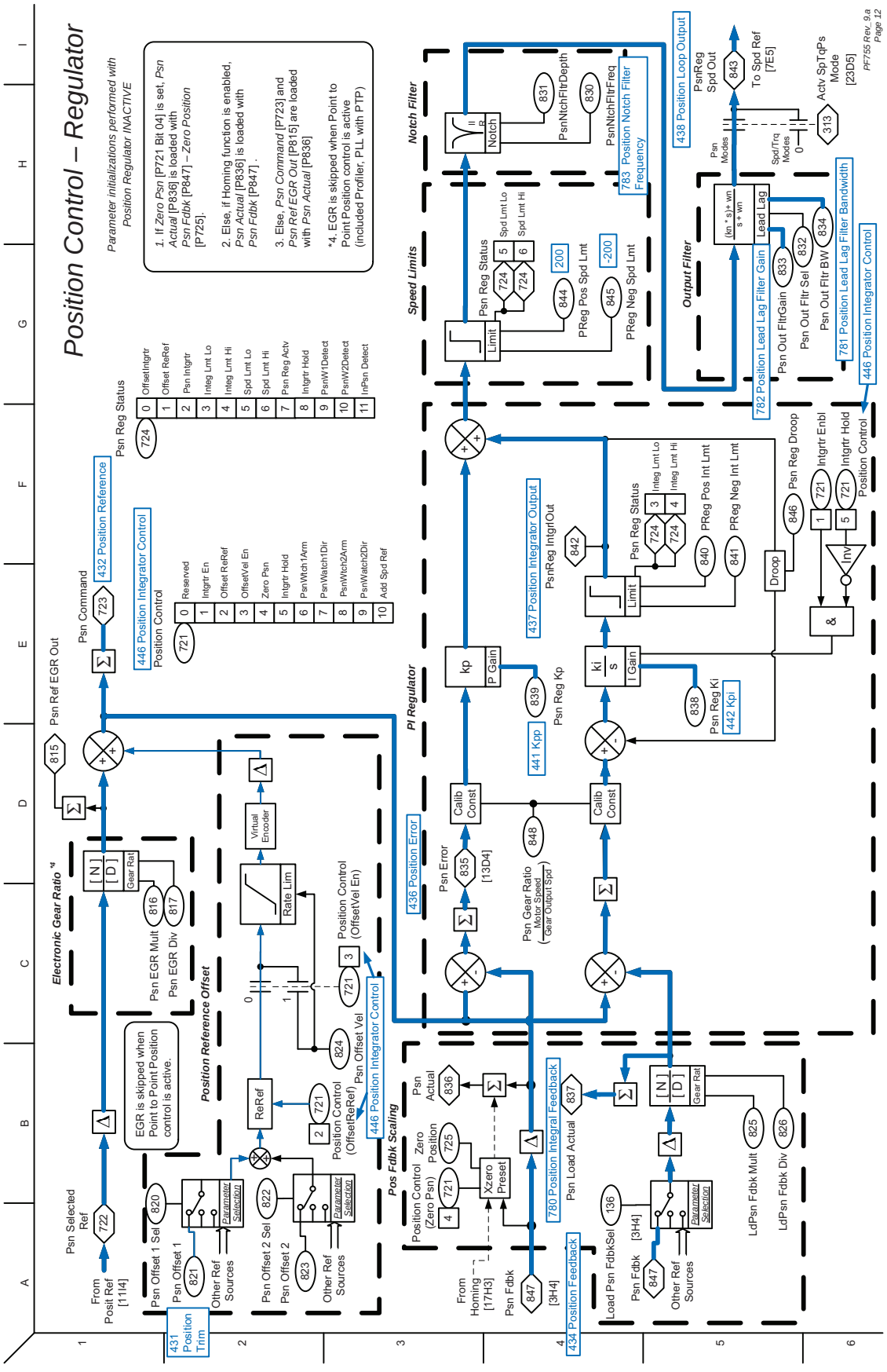

Position Control - Aux Functions

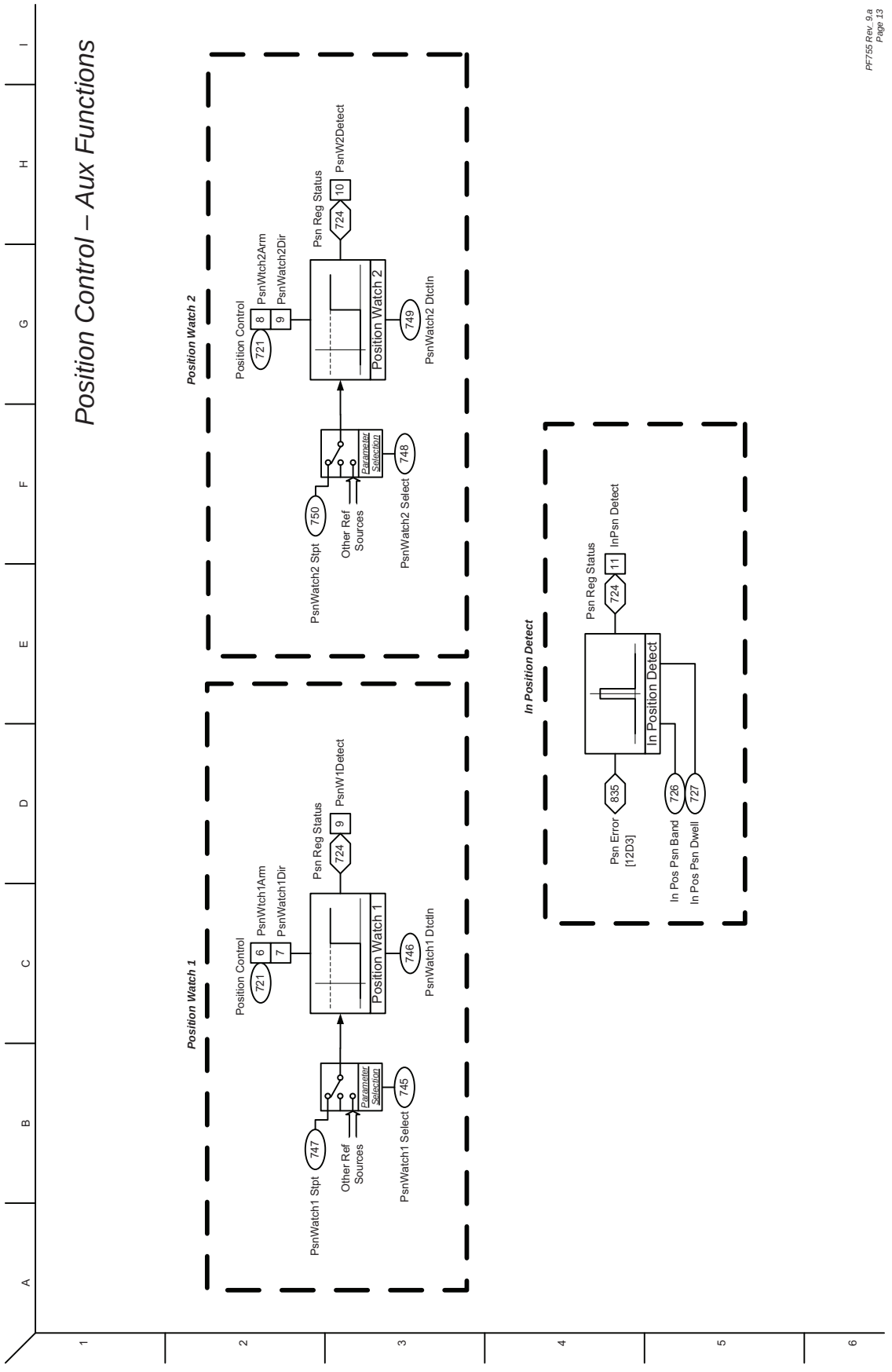

Position Control - Phase Locked Loop

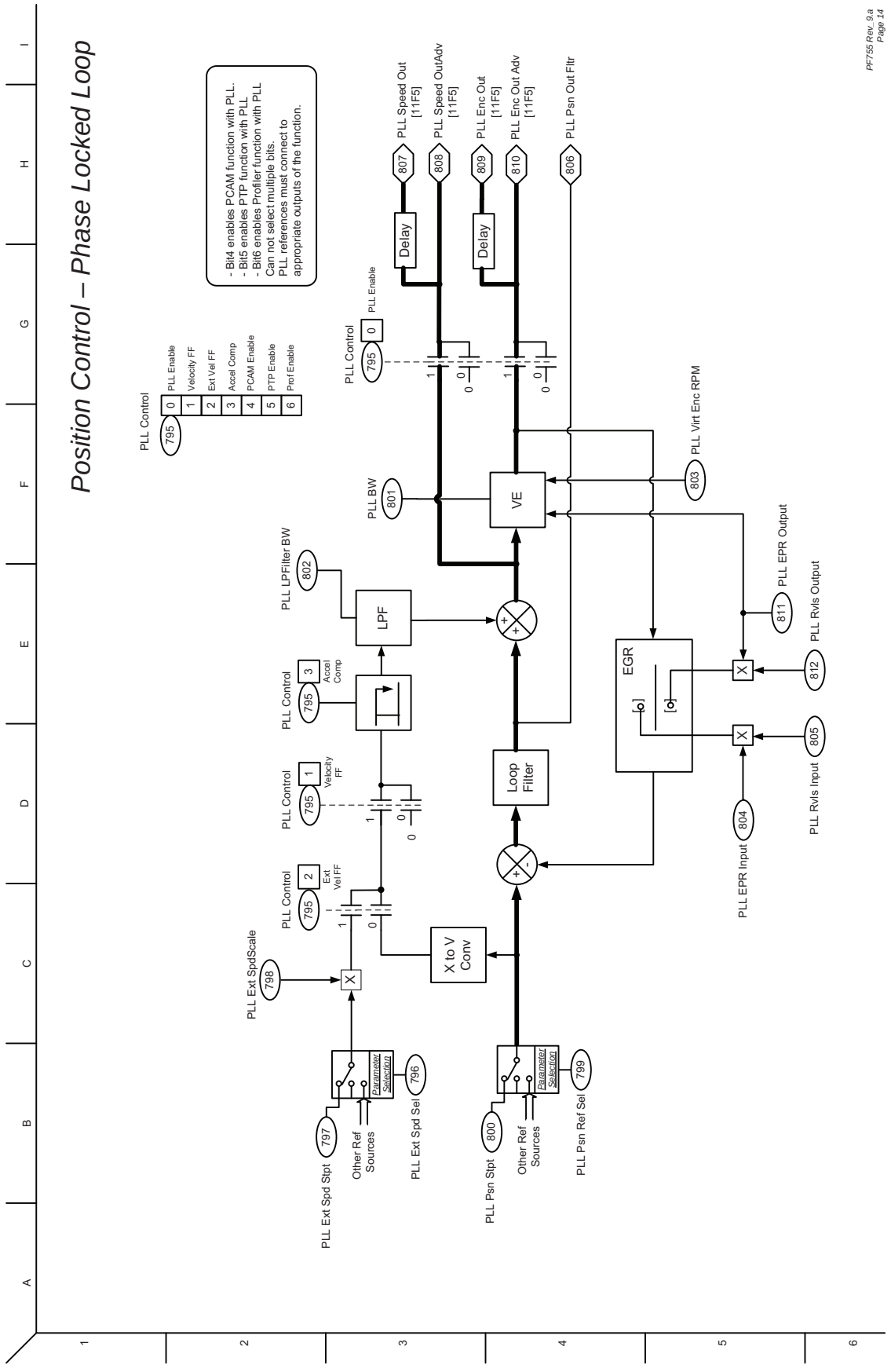

Position Control - Position CAM

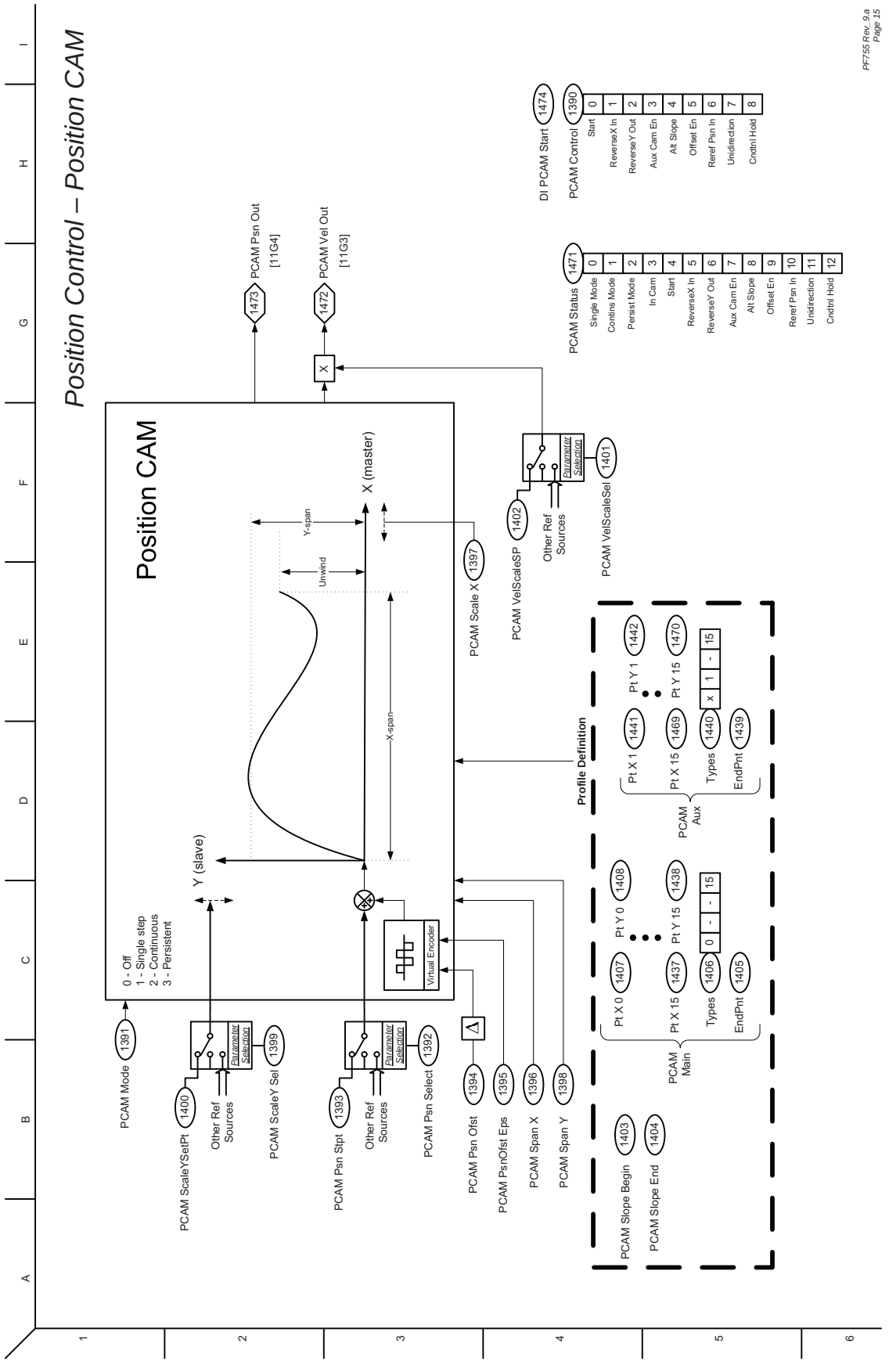

Position Control - Profiler/Indexer (Sheet 1)

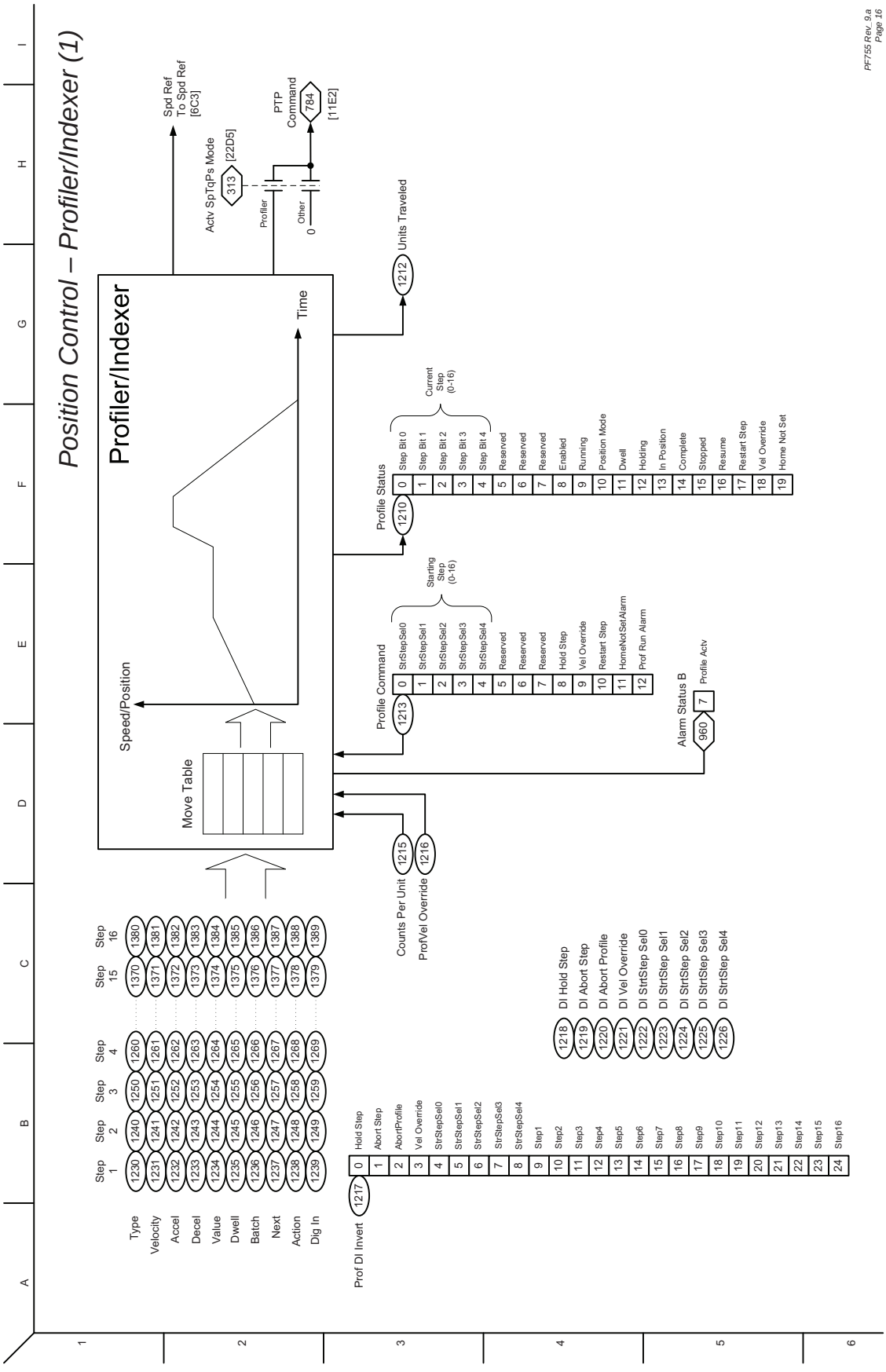

Position Control - Profiler/Indexer (Sheet 2) / Position Control - Homing

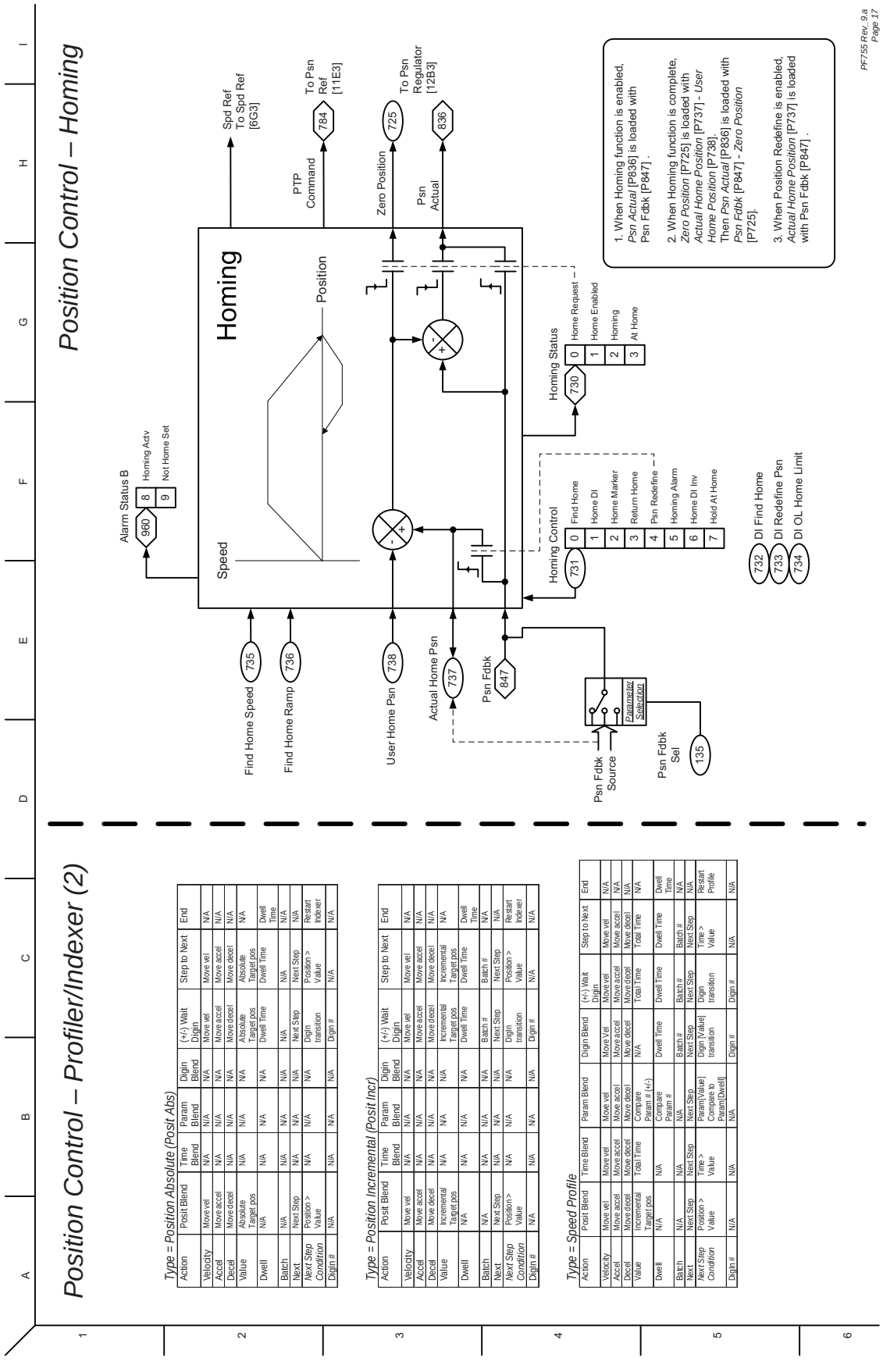

Type = Position Absolute (Posit Abs)

Action	Posit Blend	Time Blend	Param Blend	Digin Blend	(+/-) Wait Digin	Step to Next	End
Velocity	Move vel	N/A	N/A	N/A	Move vel	Move vel	N/A
Accel	Move accel	N/A	N/A	N/A	Move accel	Move accel	N/A
Decel	Move decel	N/A	N/A	N/A	Move decel	Move decel	N/A
Value	Absolute Target pos	N/A	N/A	N/A	Absolute Target pos	Absolute Target pos	N/A
Dwell	N/A	N/A	N/A	N/A	Dwell Time	Dwell Time	Dwell Time
Batch	N/A	N/A	N/A	N/A	N/A	N/A	N/A
Next	Next Step	N/A	N/A	N/A	Next Step	Next Step	N/A
Next Step Condition	Position > Value	N/A	N/A	N/A	Digin transition	Position > Value	Restart Indexer
Digin #	N/A	N/A	N/A	N/A	Digin #	N/A	N/A

Type = Position Incremental (Posit Incr)

Action	Posit Blend	Time Blend	Param Blend	Digin Blend	(+/-) Wait Digin	Step to Next	End
Velocity	Move vel	N/A	N/A	N/A	Move vel	Move vel	N/A
Accel	Move accel	N/A	N/A	N/A	Move accel	Move accel	N/A
Decel	Move decel	N/A	N/A	N/A	Move decel	Move decel	N/A
Value	Incremental Target pos	N/A	N/A	N/A	Incremental Target pos	Incremental Target pos	N/A
Dwell	N/A	N/A	N/A	N/A	Dwell Time	Dwell Time	Dwell Time
Batch	N/A	N/A	N/A	N/A	Batch #	Batch #	N/A
Next	Next Step	N/A	N/A	N/A	Next Step	Next Step	N/A
Next Step Condition	Position > Value	N/A	N/A	N/A	Digin transition	Position > Value	Restart Indexer
Digin #	N/A	N/A	N/A	N/A	Digin #	N/A	N/A

Type = Speed Profile

Action	Posit Blend	Time Blend	Param Blend	Digin Blend	(+/-) Wait Digin	Step to Next	End
Velocity	Move vel	Move vel	Move vel	Move Vel	Move vel	Move vel	N/A
Accel	Move accel	Move accel	Move accel	Move accel	Move accel	Move accel	N/A
Decel	Move decel	Move decel	Move decel	Move decel	Move decel	Move decel	N/A
Value	Incremental Target pos	Total Time	Compare Param # (+/-)	N/A	Total Time	Total Time	N/A
Dwell	N/A	N/A	Compare Param #	Dwell Time	Dwell Time	Dwell Time	Dwell Time
Batch	N/A	N/A	N/A	Batch #	Batch #	Batch #	N/A
Next	Next Step	Next Step	Next Step	Next Step	Next Step	Next Step	N/A
Next Step Condition	Position > Value	Time > Value	Param[Value] Compare to Param[Dwell]	Digin [Value] transition	Digin transition	Time > Value	Restart Profile
Digin #	N/A	N/A	N/A	Digin #	Digin #	N/A	N/A

Position Control / Aux Functions, Roll Position Indicator

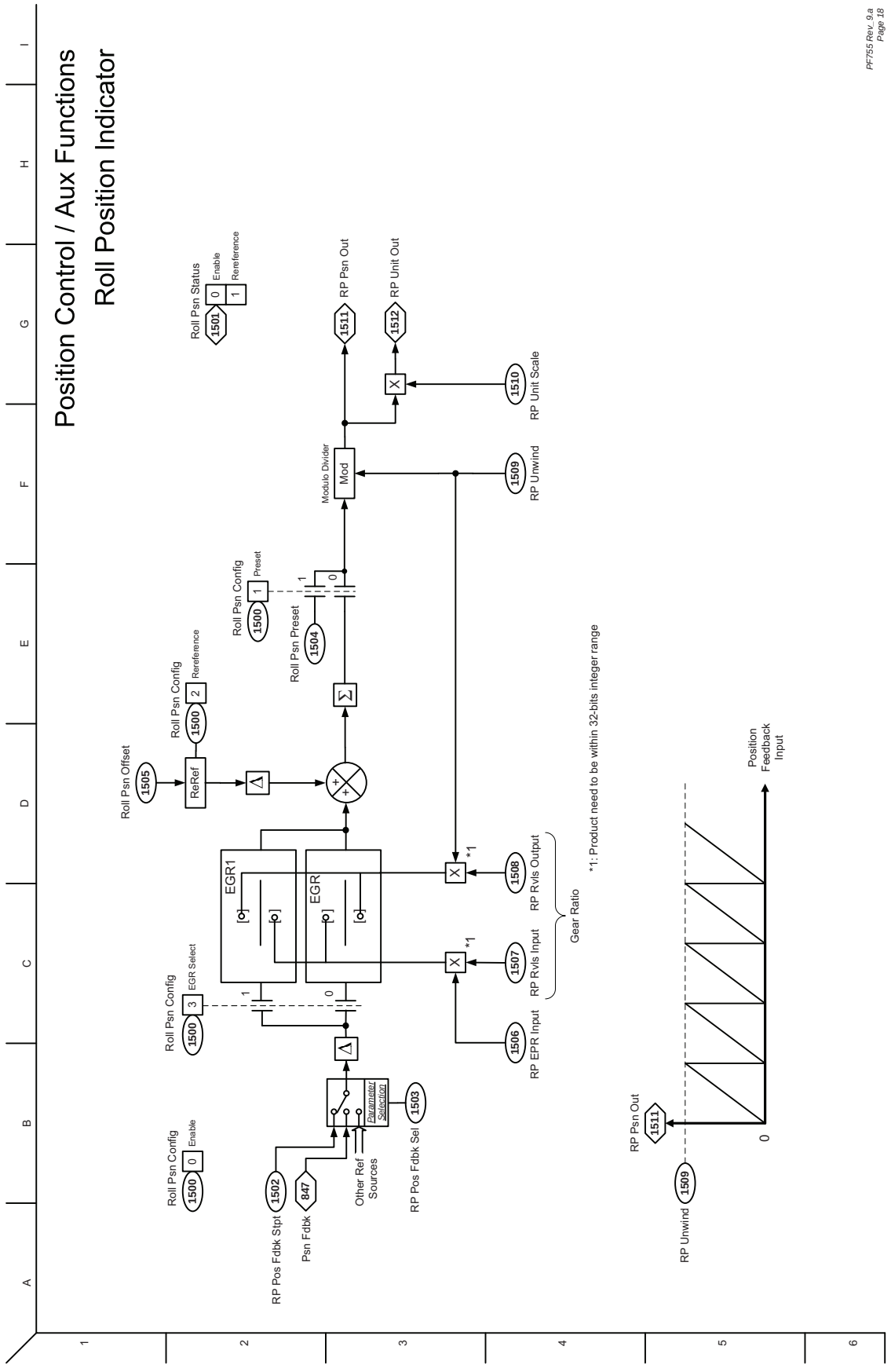

Position Control – Spindle Orient

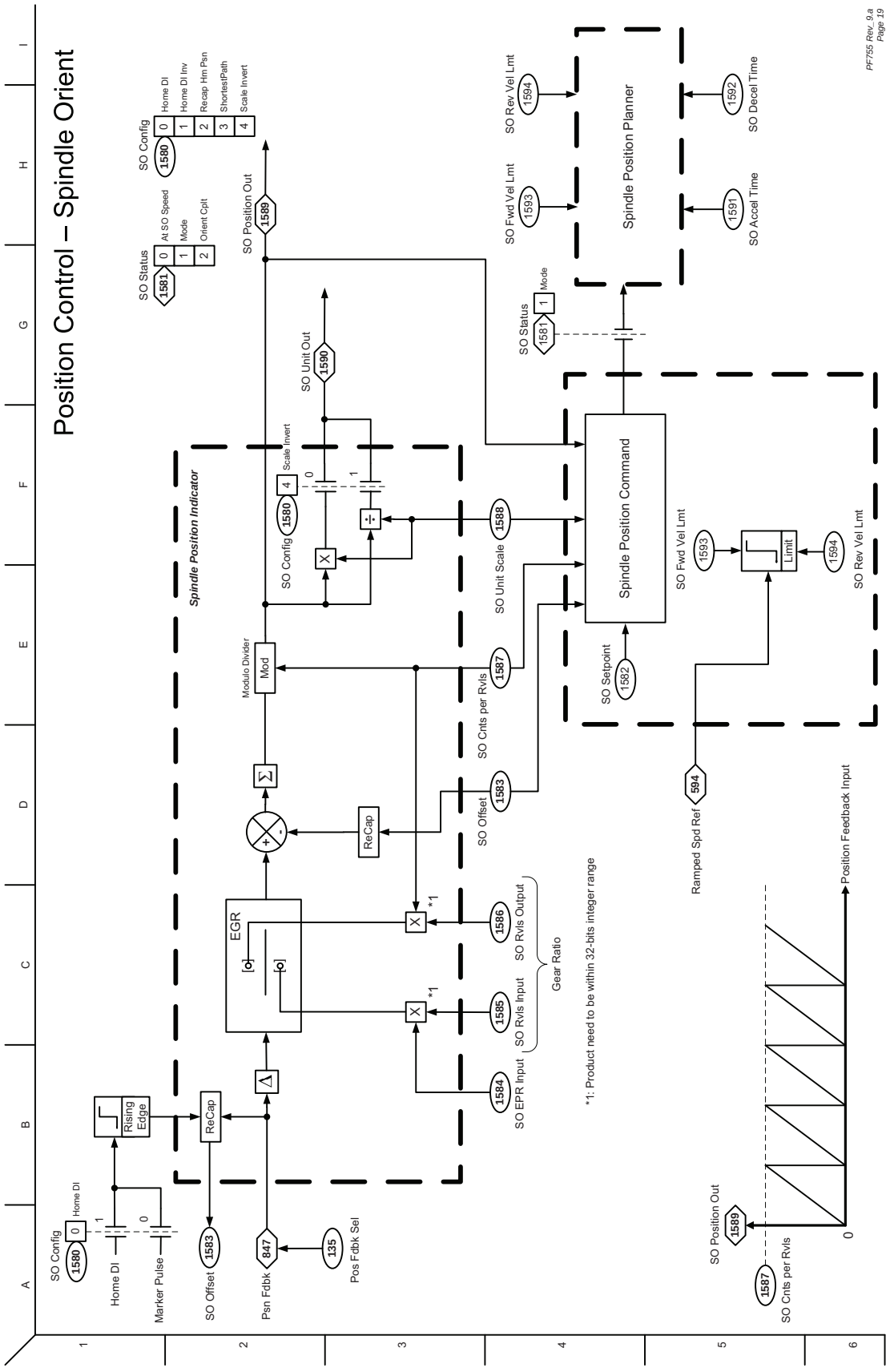

Position Control / Aux Functions, Position Oriented Torque Boost

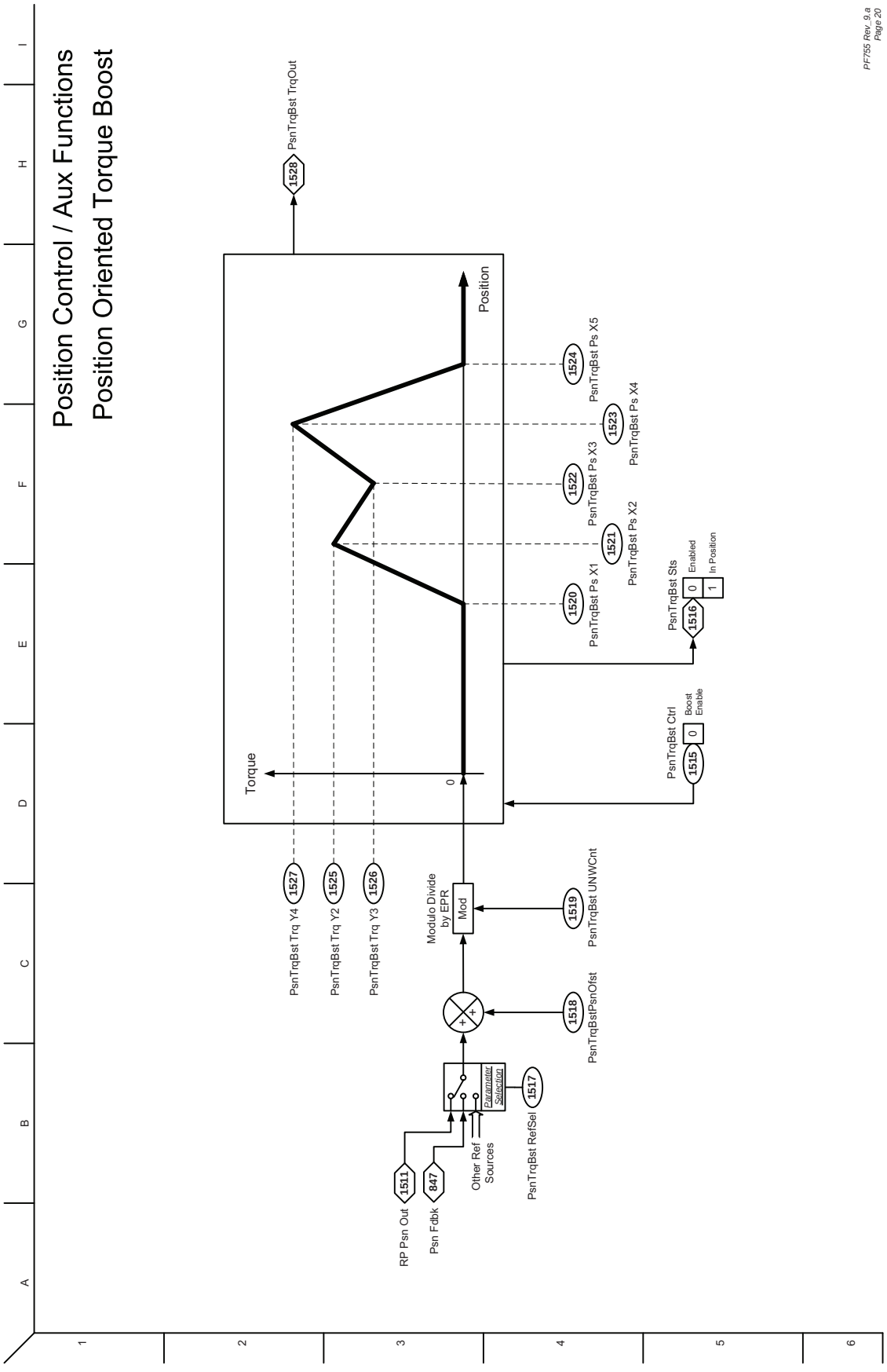

Torque Control Overview - Induction Motor and Surface Permanent Magnet Motor

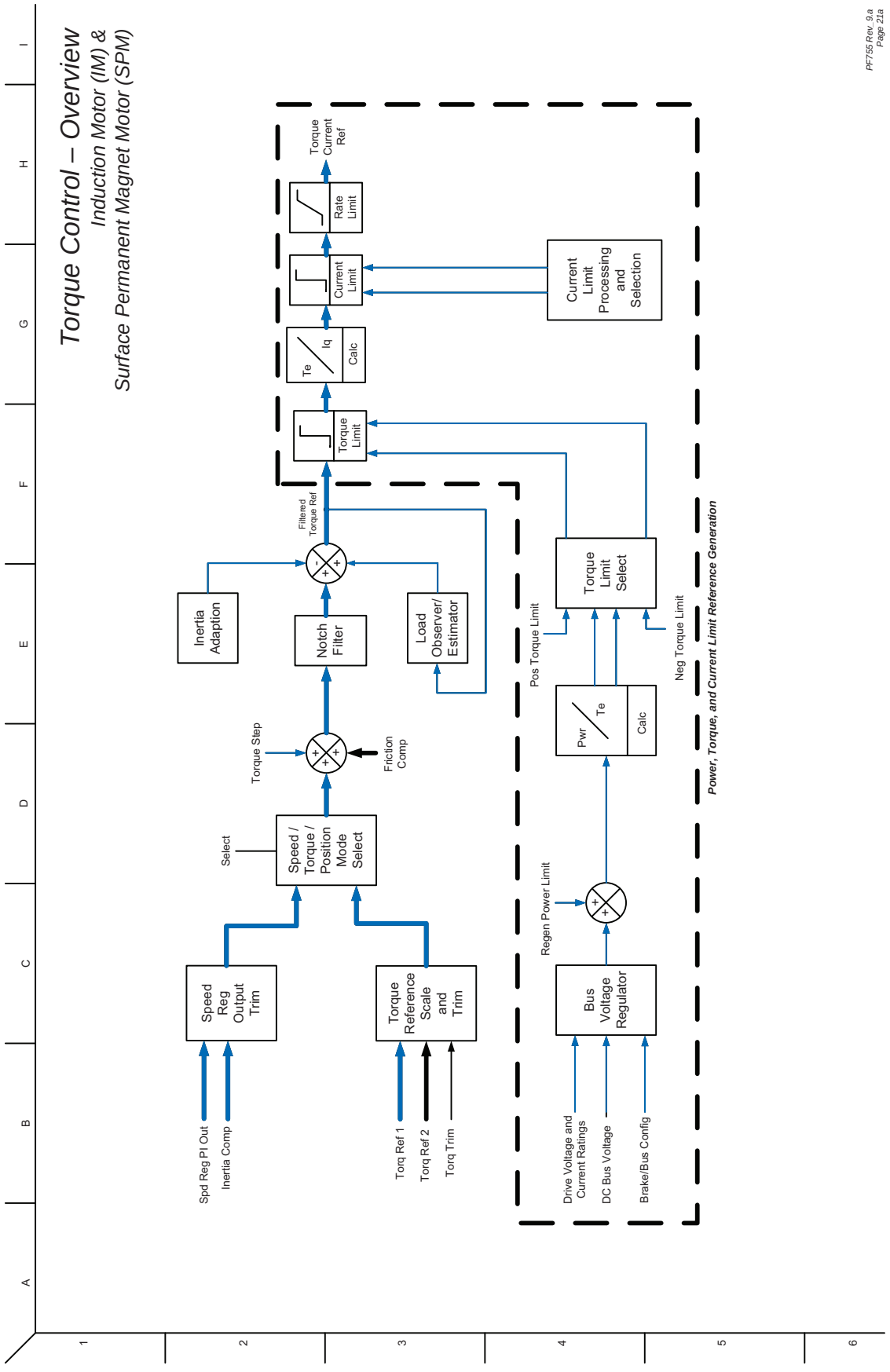

Torque Control Overview - Interior Permanent Magnet Motor

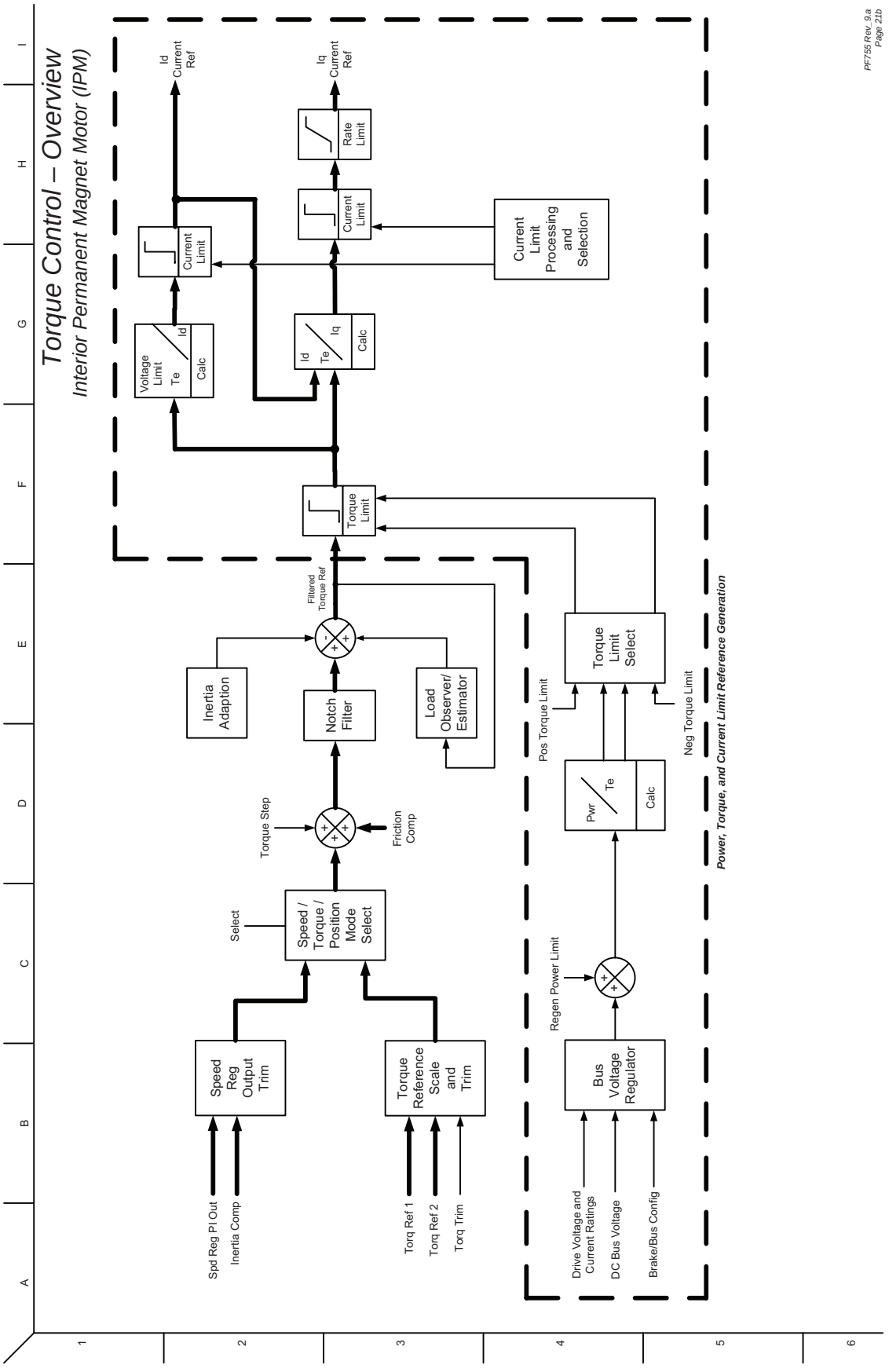

Torque Control - Reference Scale and Trim

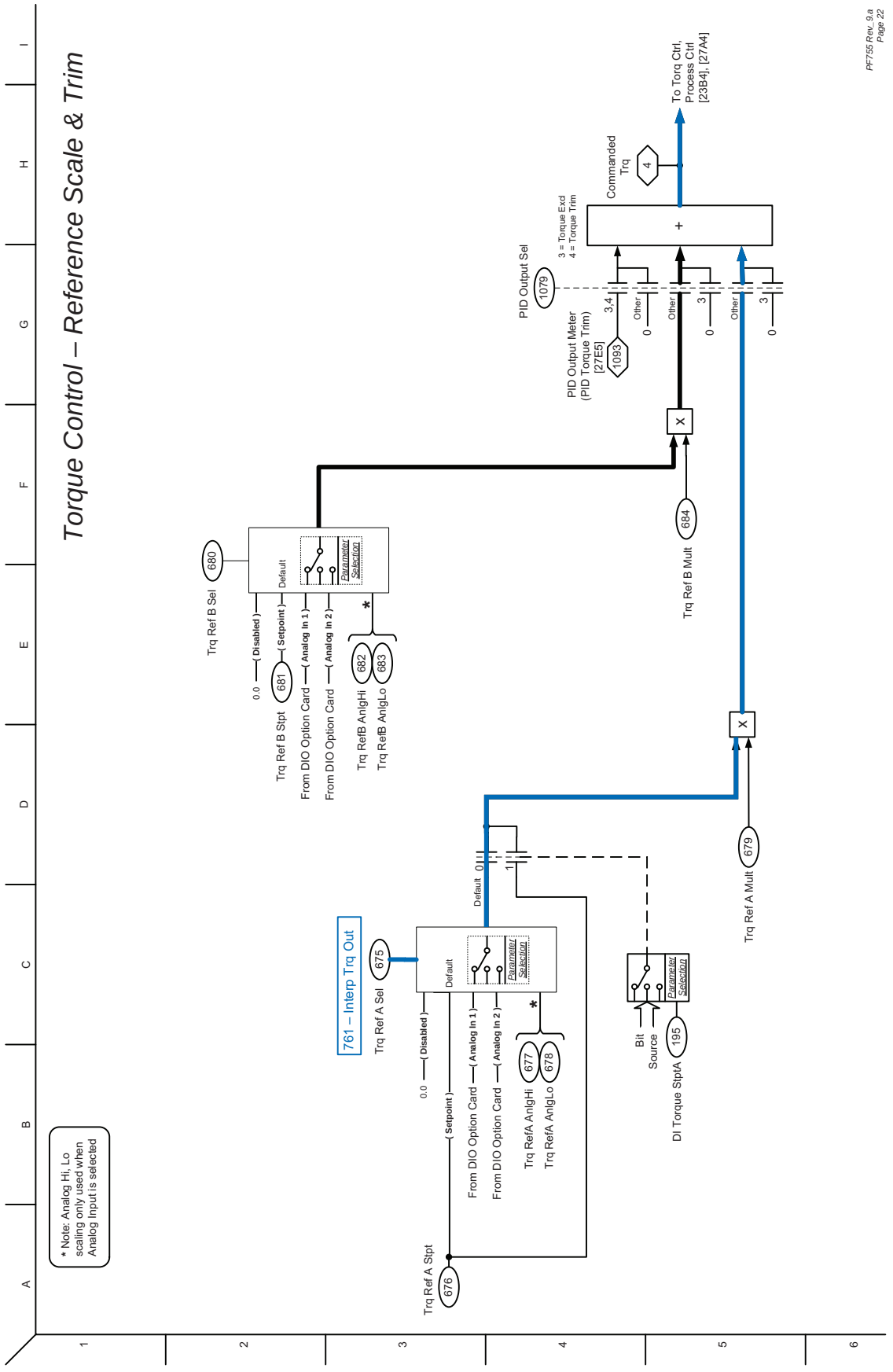

Torque Control - Torque

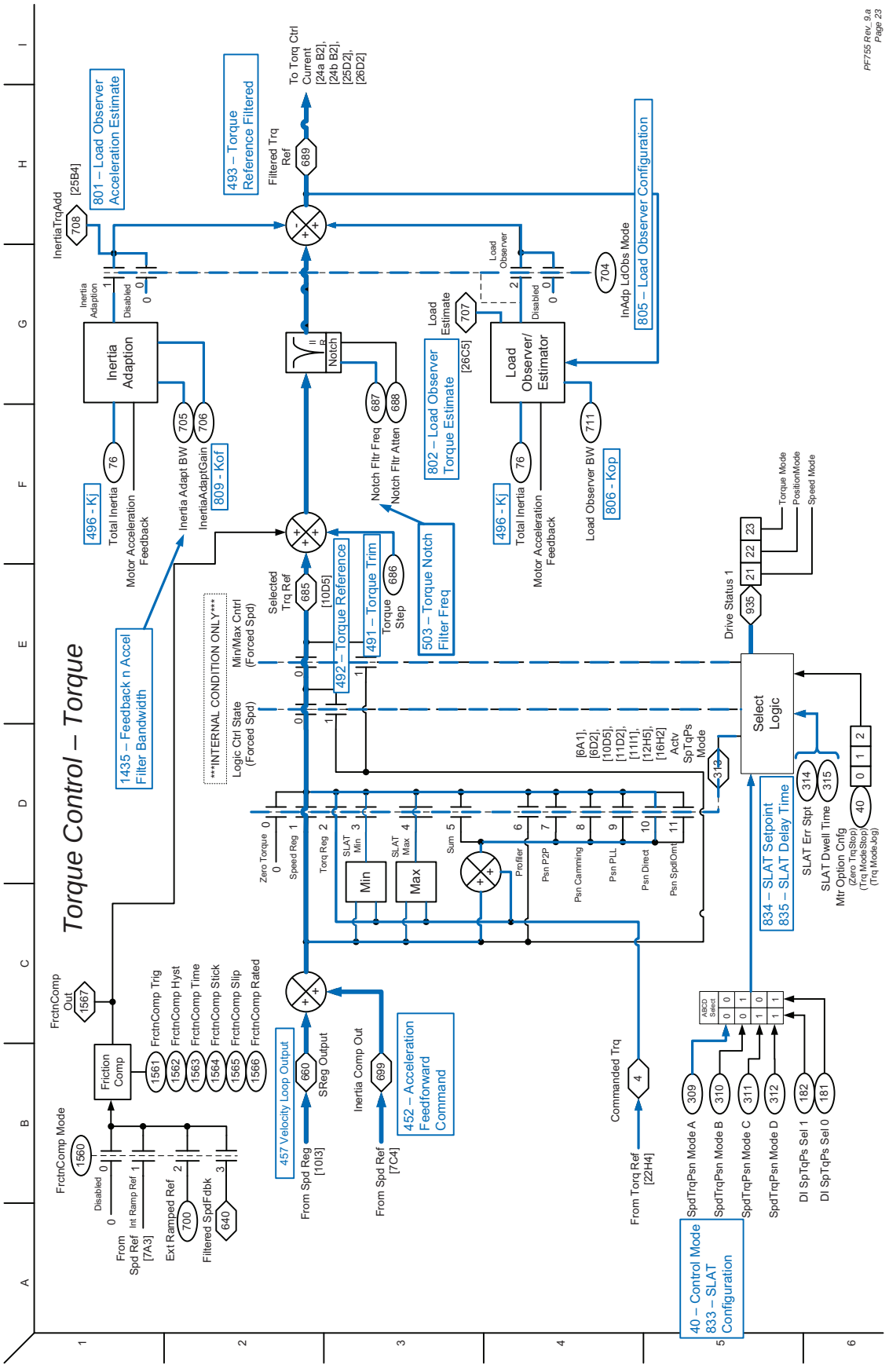

Torque Control - Current, Induction Motor and Surface Permanent Magnet Motor

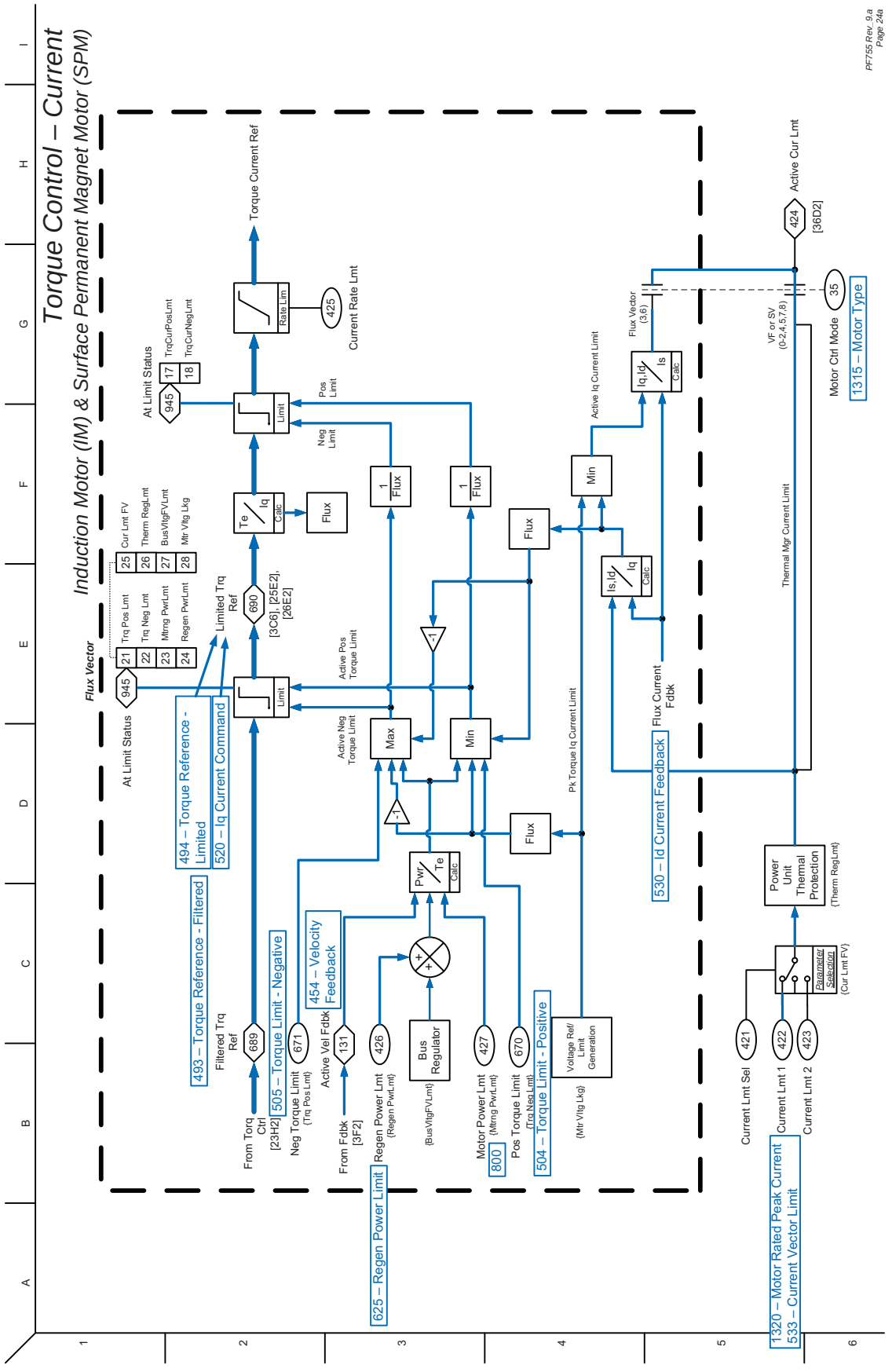

Torque Control - Current, Interior Permanent Magnet Motor

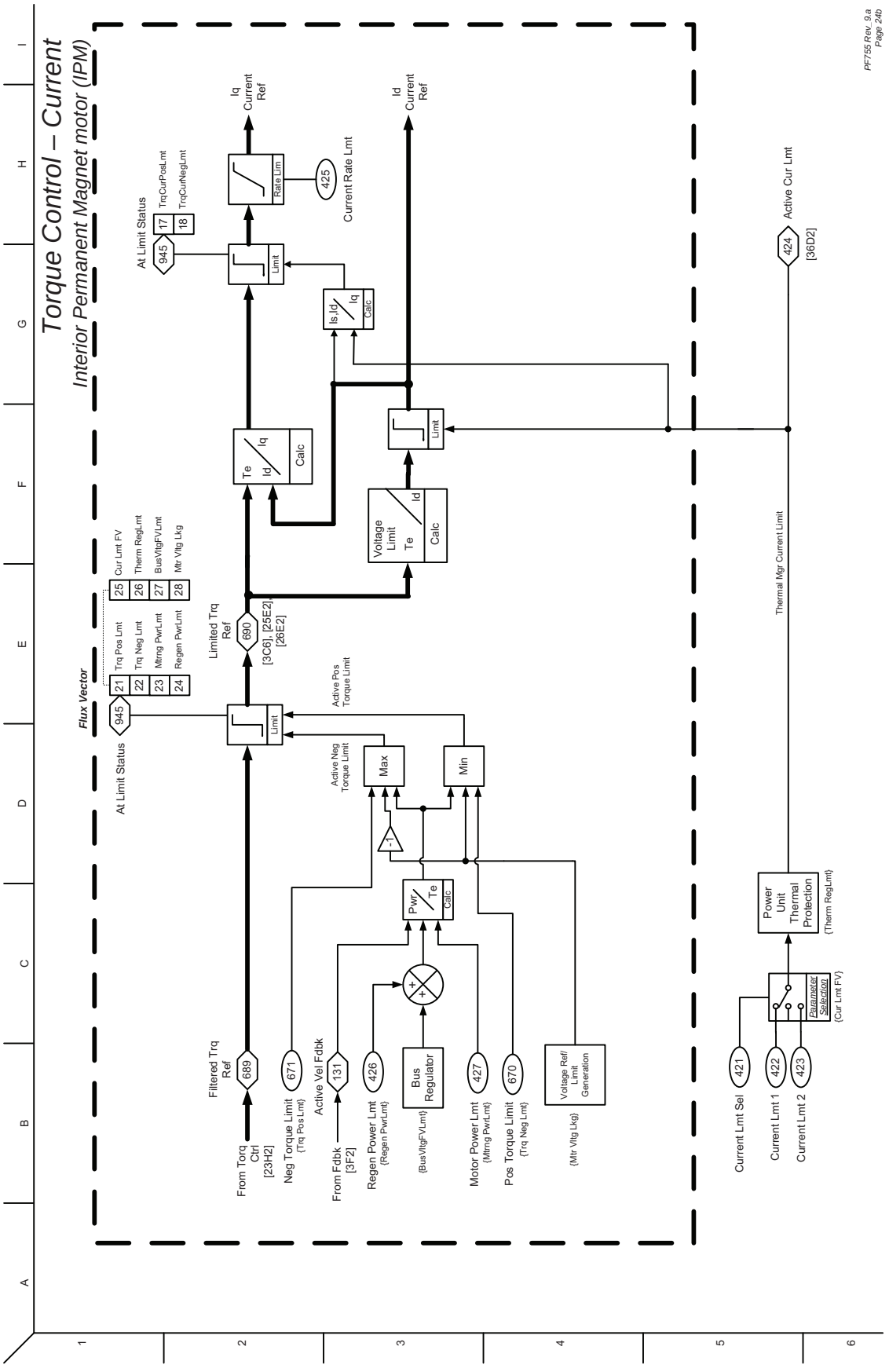

Torque Control - Inertia Adaption

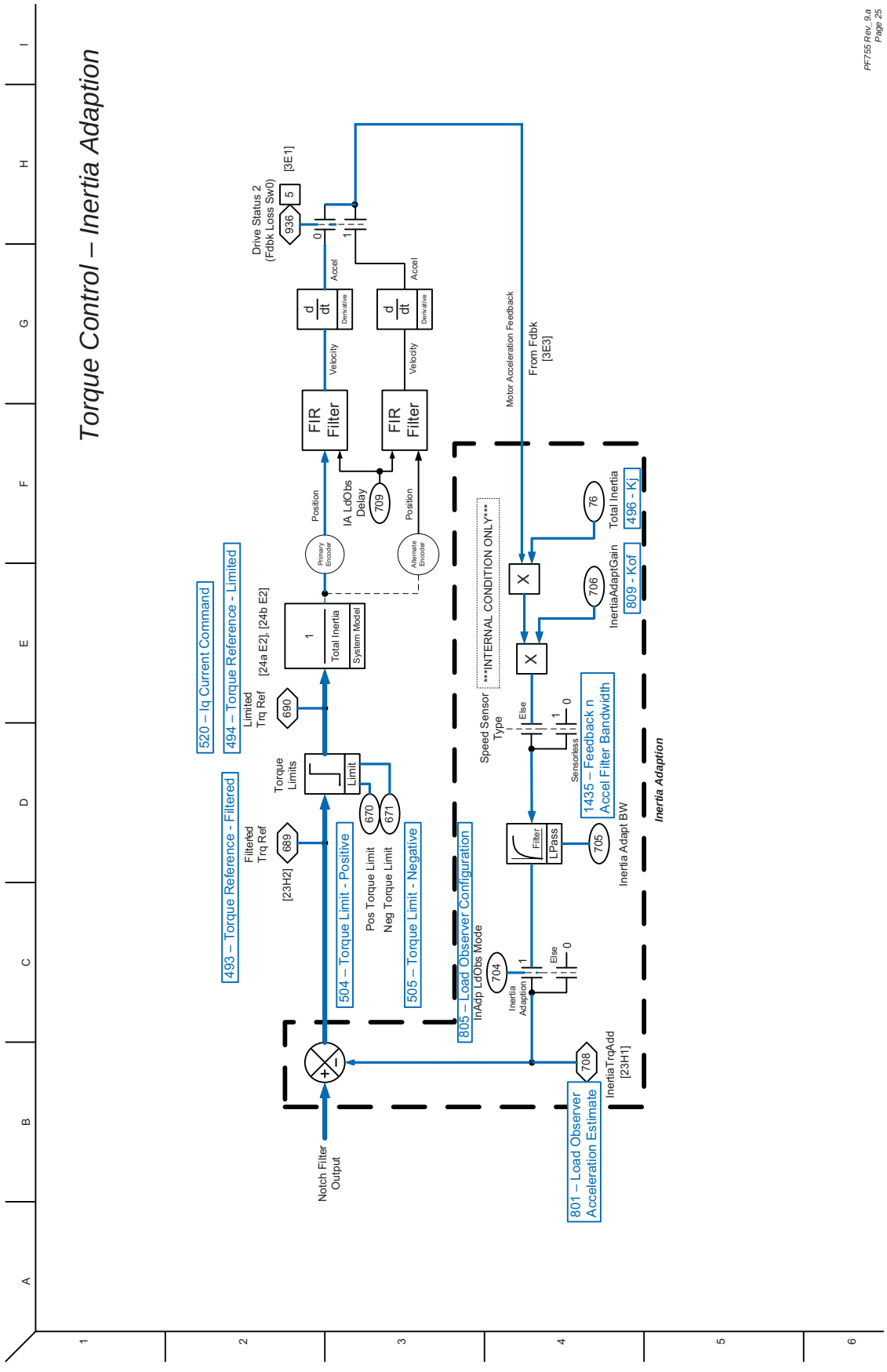

Torque Control - Load Observer / Estimator

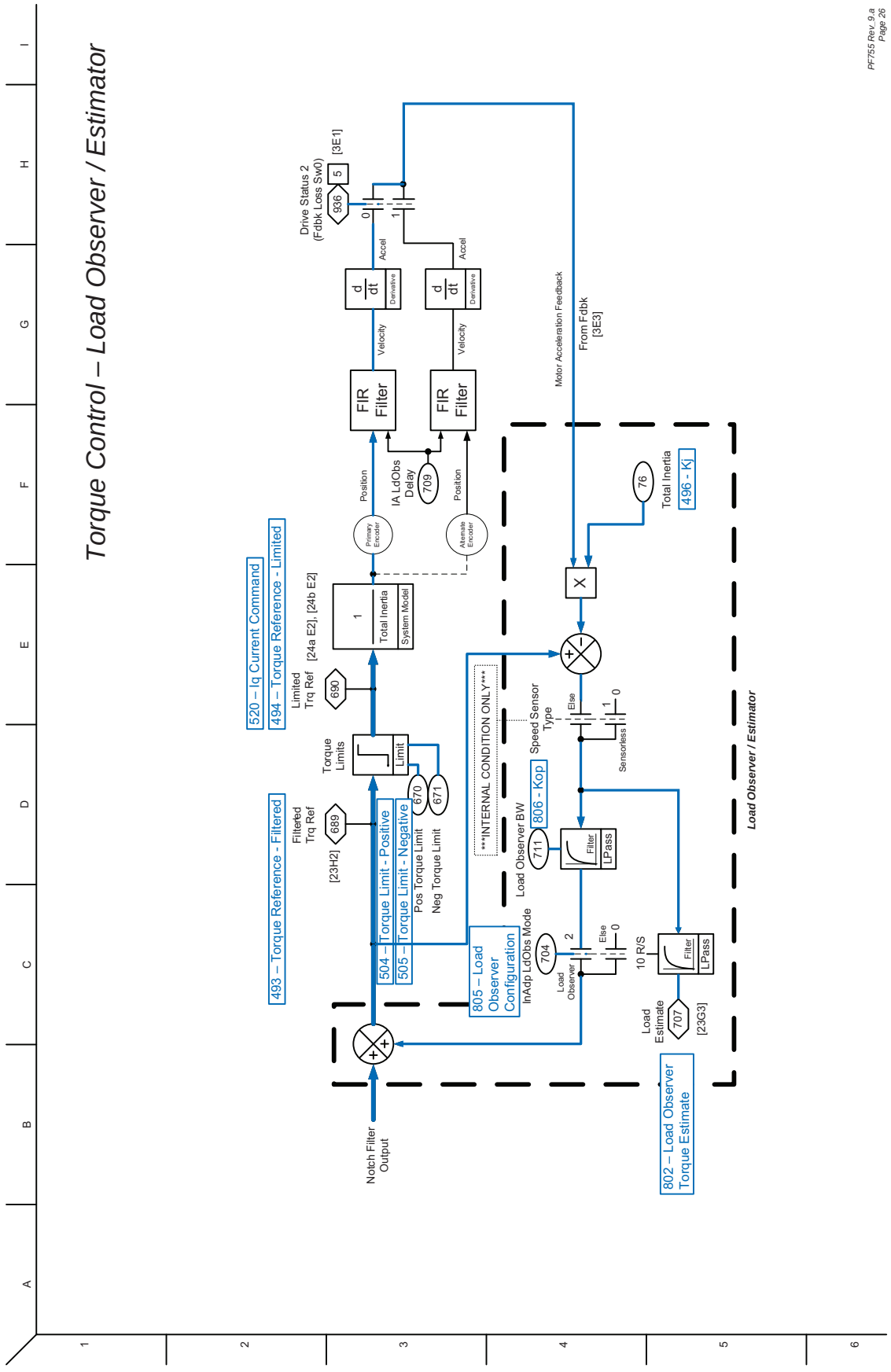

Process Control (Sheet 1)

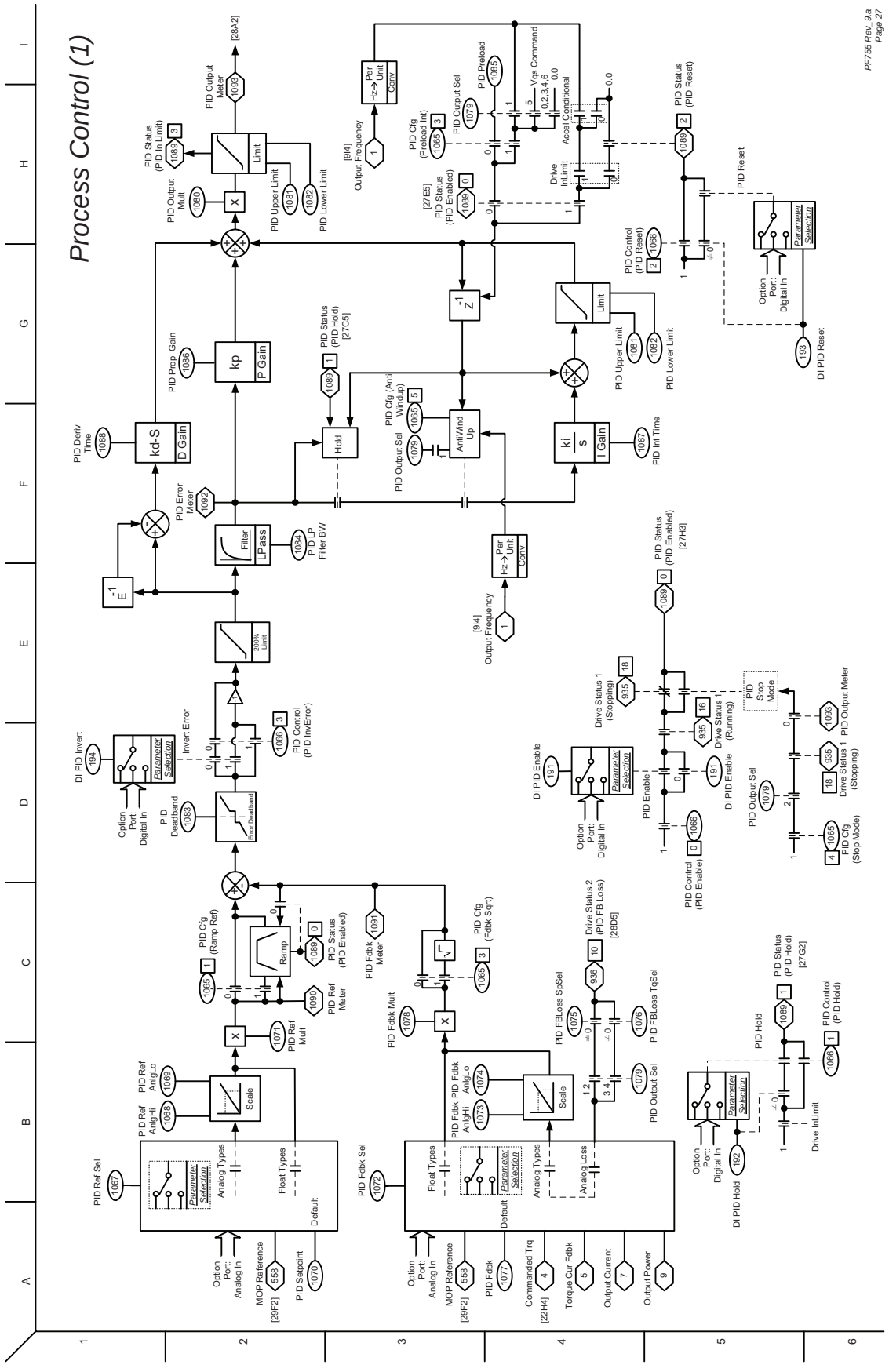

Process Control (Sheet 2)

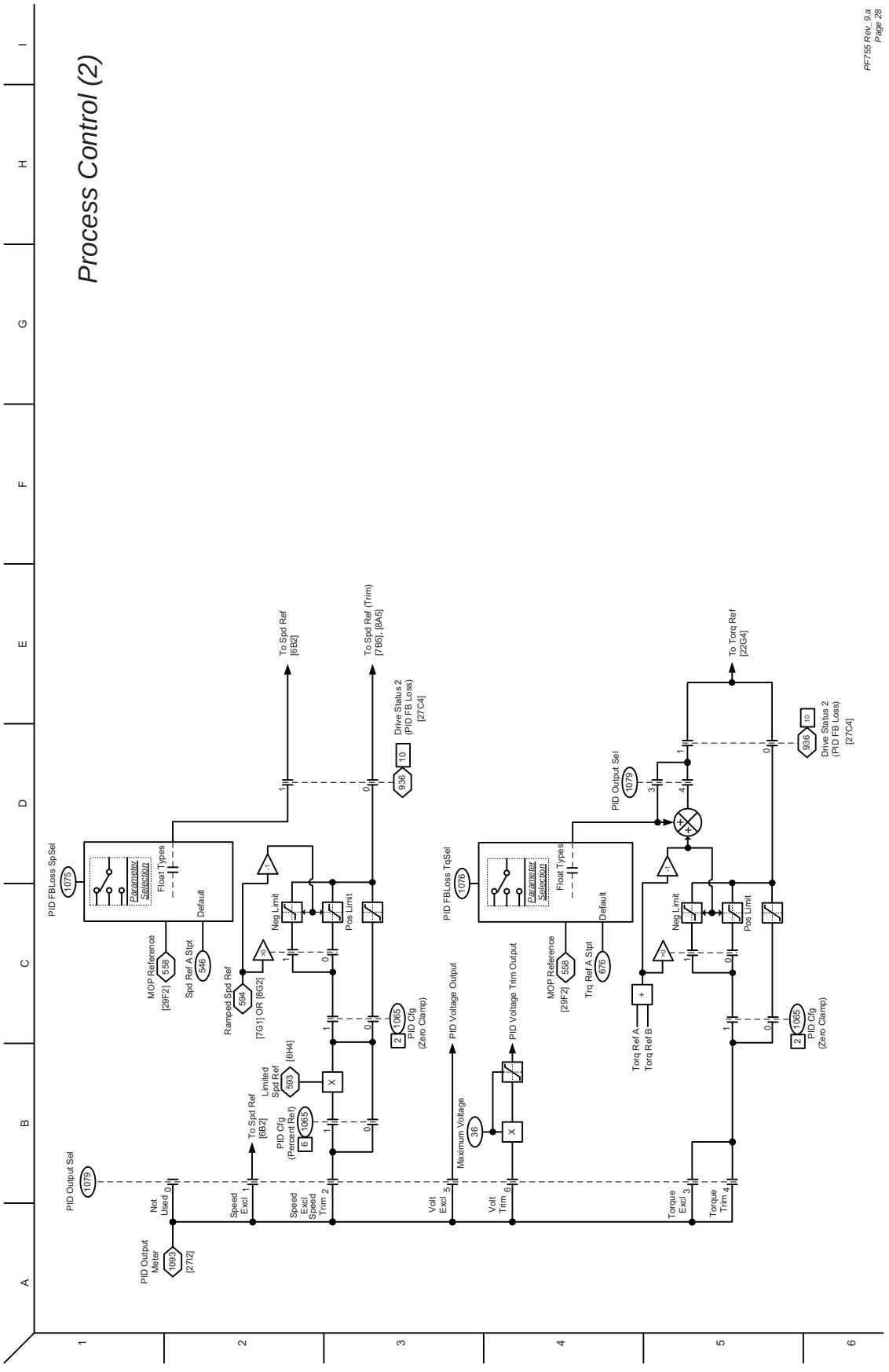

MOP Control

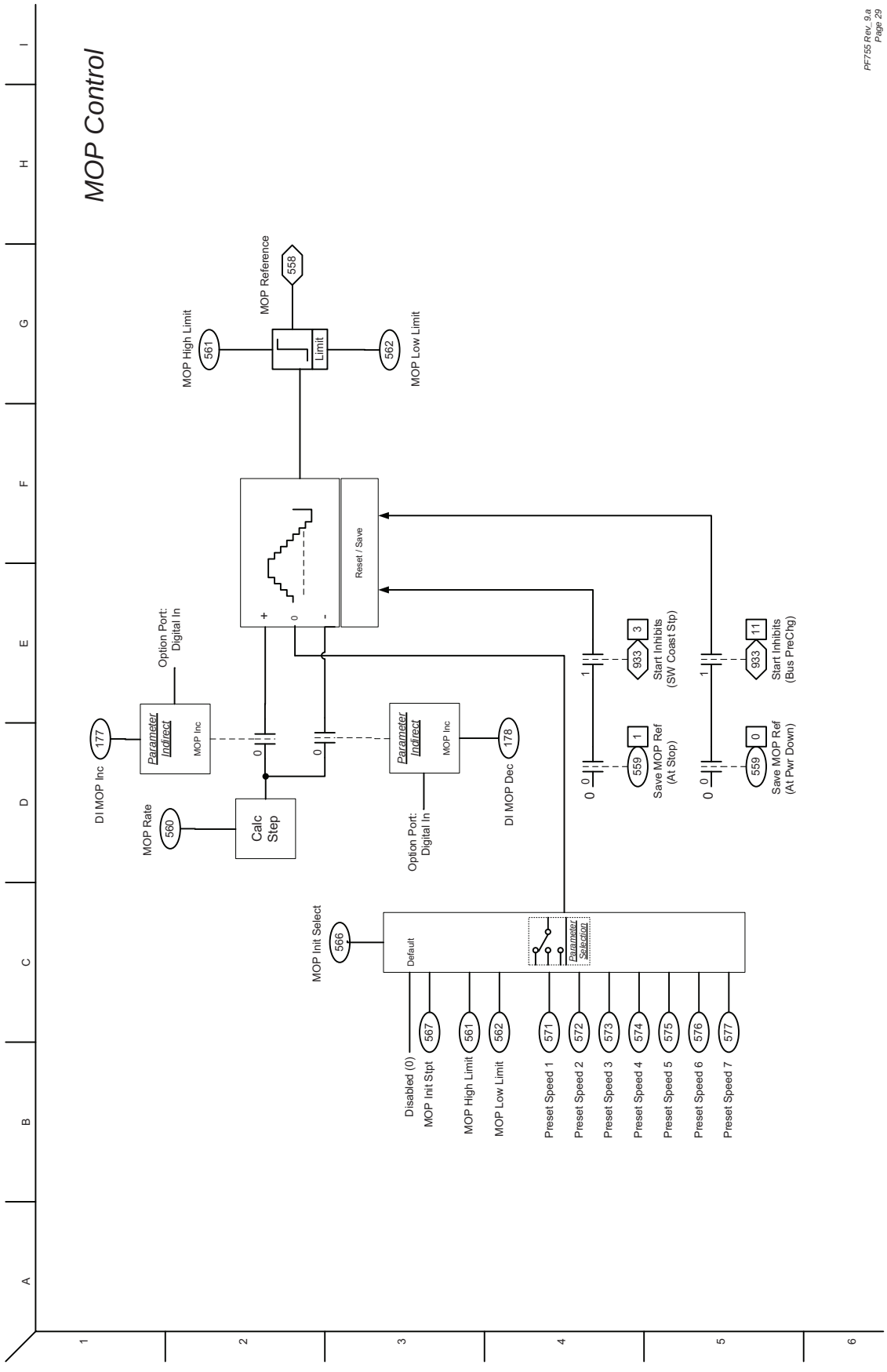
MOP Control
PF755 Rev. 9.a
Page 29
MOP Reference
558
MOP High Limit
561
Limit
562
MOP Low Limit
Reset / Save
Option Port:
Digital In
Parameter
Indirect
MOP Inc
177
DI MOP Inc
MOP Rate
560
Calc
Step
178
DI MOP Dec
933
3
Start Inhibits
(SW Coast Stp)
559
1
Save MOP Ref
(At Stop)
933
11
Start Inhibits
(Bus PreChg)
559
0
Save MOP Ref
(At Pwr Down)
MOP Init Select
566
Default
Parameter
Selection
Disabled (0)
MOP Init Stpt
567
MOP High Limit
561
MOP Low Limit
562
Preset Speed 1
571
Preset Speed 2
572
Preset Speed 3
573
Preset Speed 4
574
Preset Speed 5
575
Preset Speed 6
576
Preset Speed 7
577

Inputs and Outputs - Digital

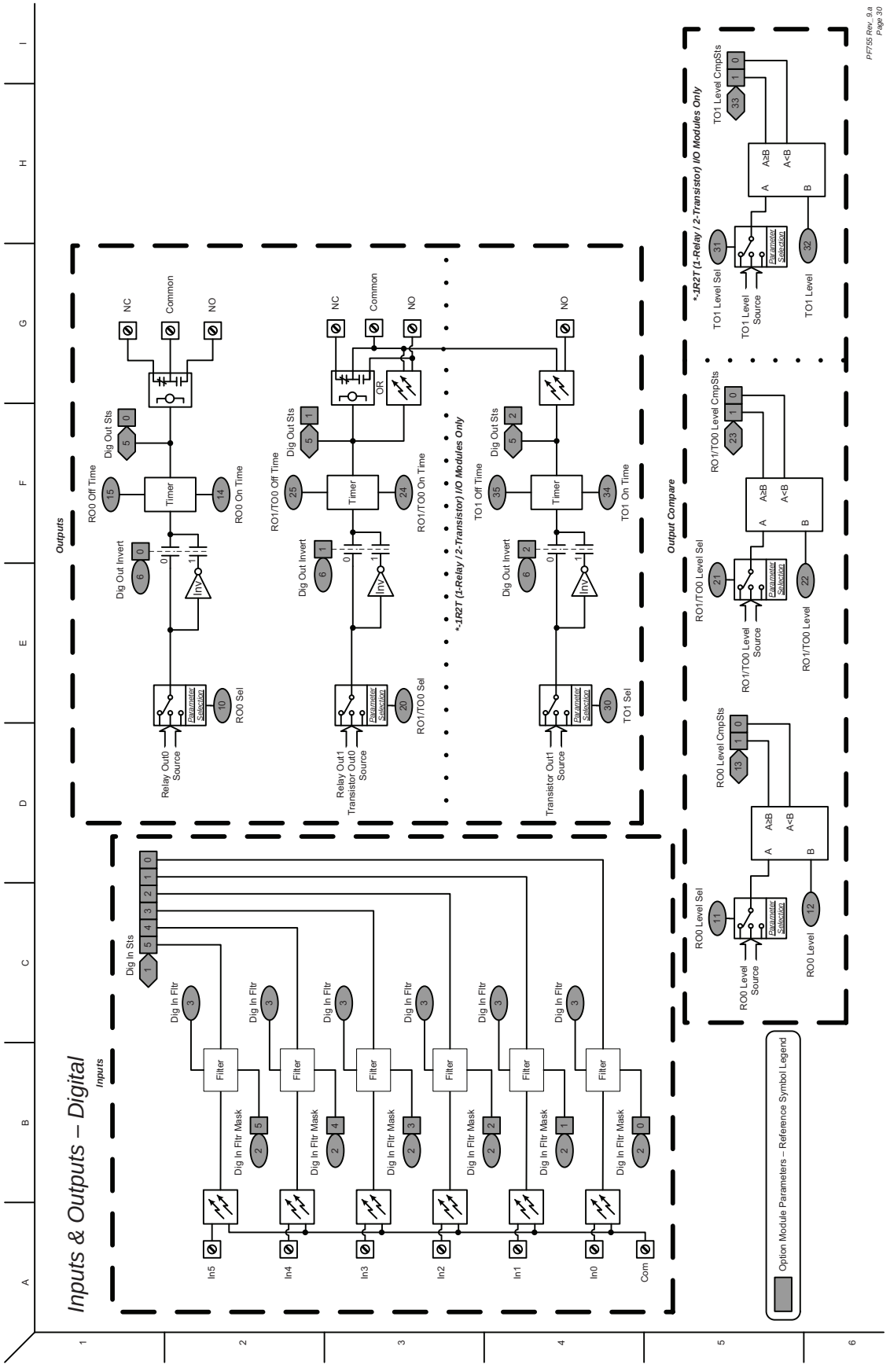

Inputs and Outputs - Analog

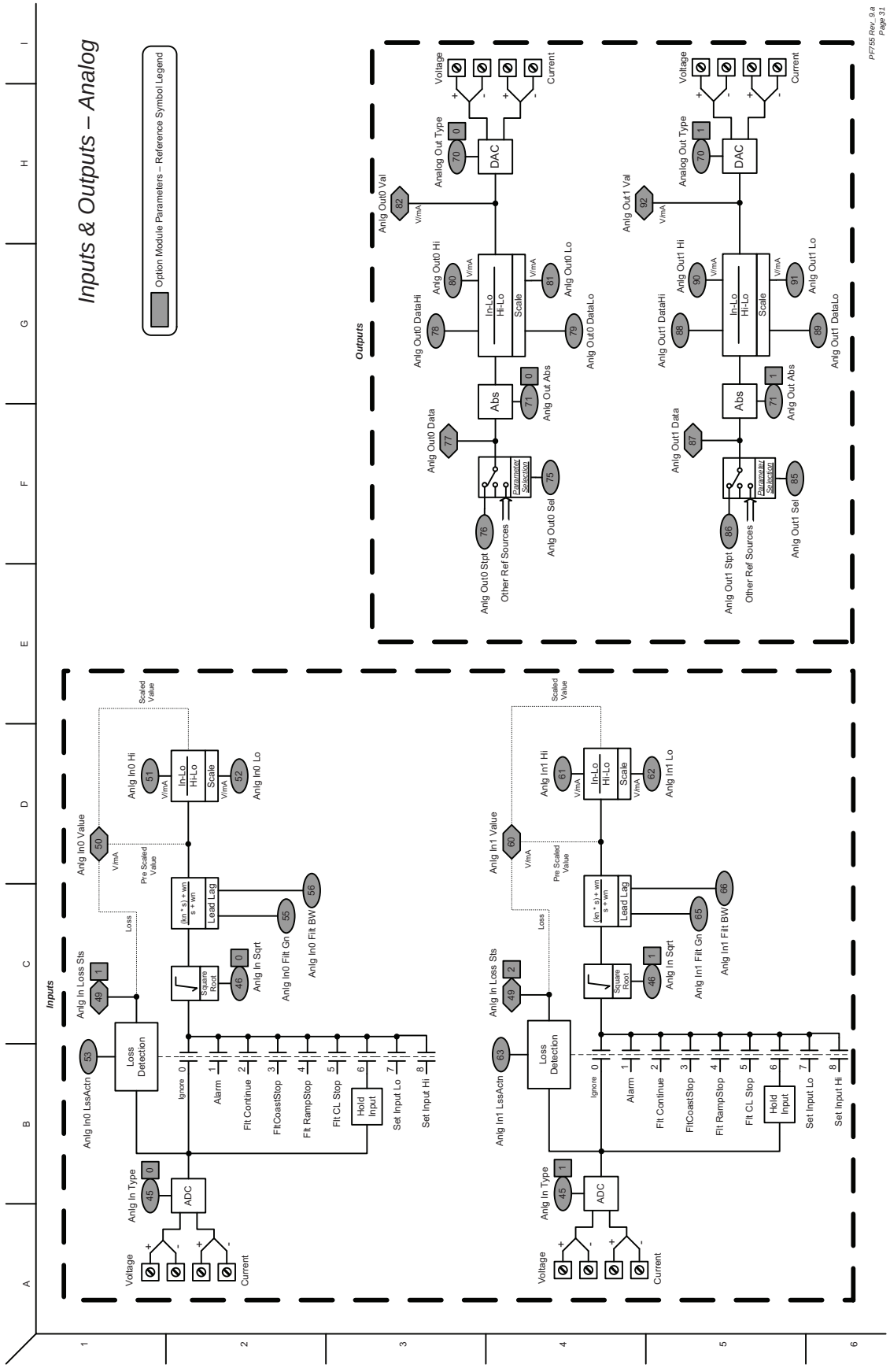

11-Series Inputs and Outputs – Digital

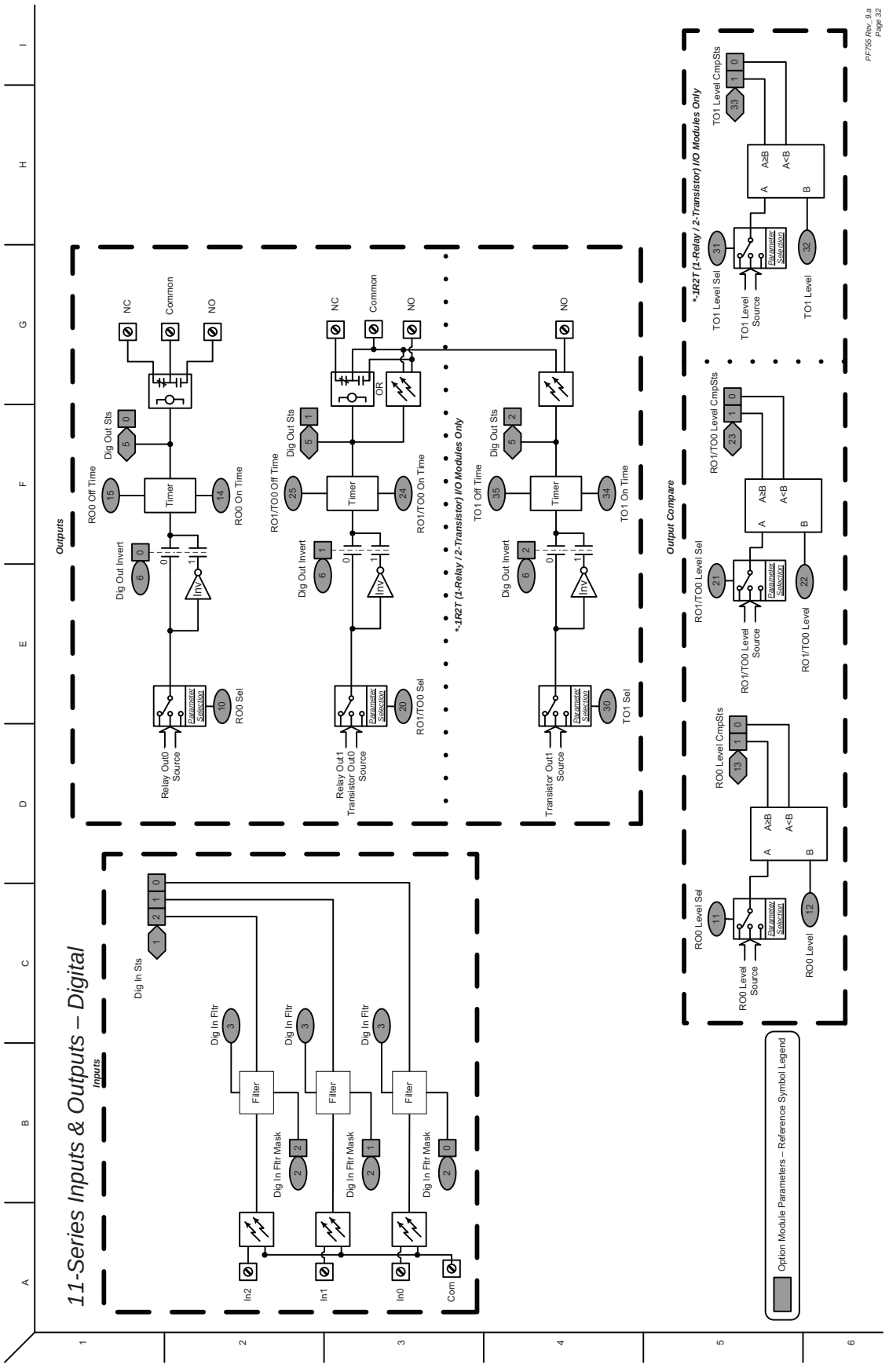

11-Series Inputs and Outputs – Analog

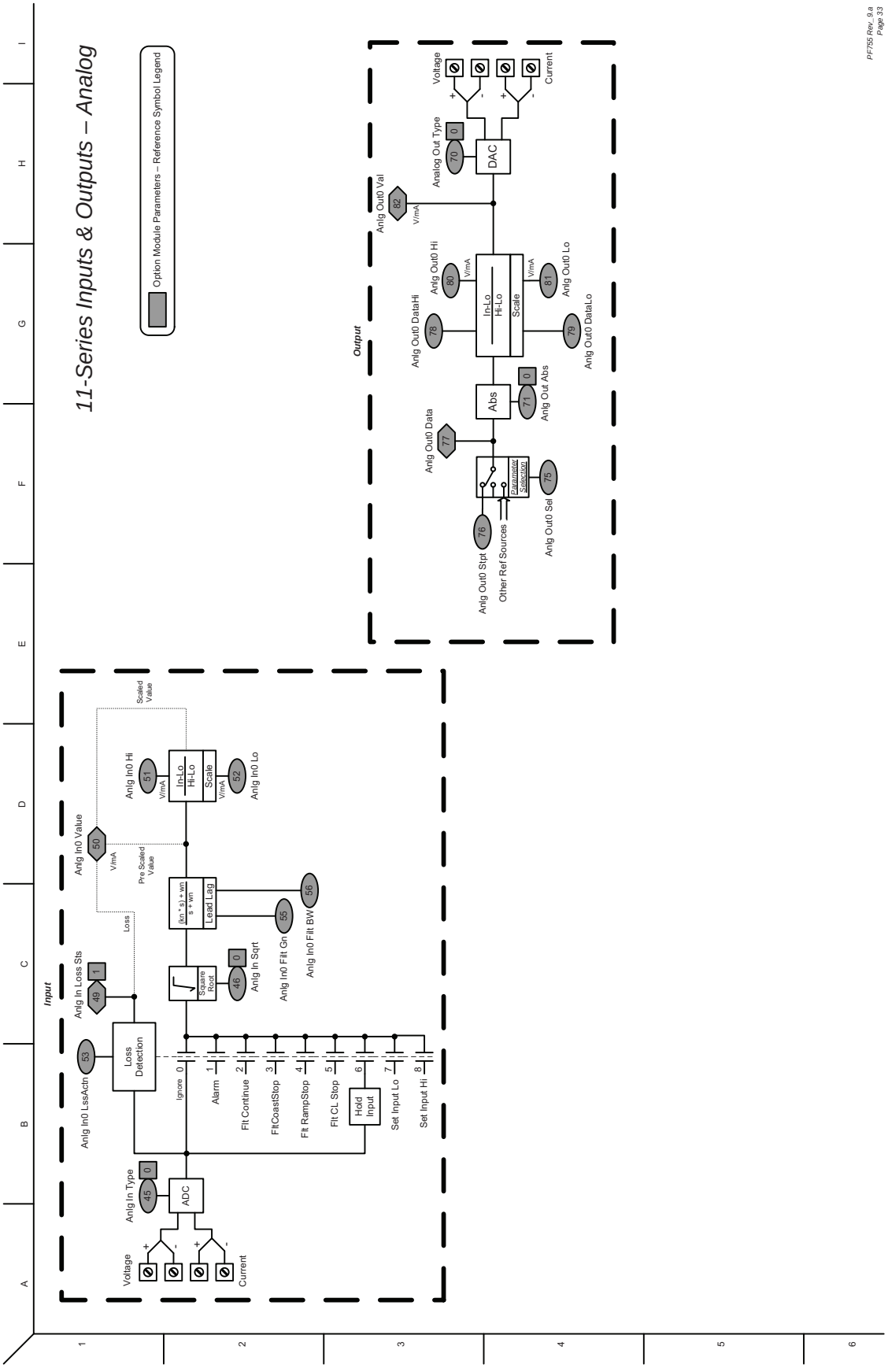

11-Series Inputs and Outputs – ATEX

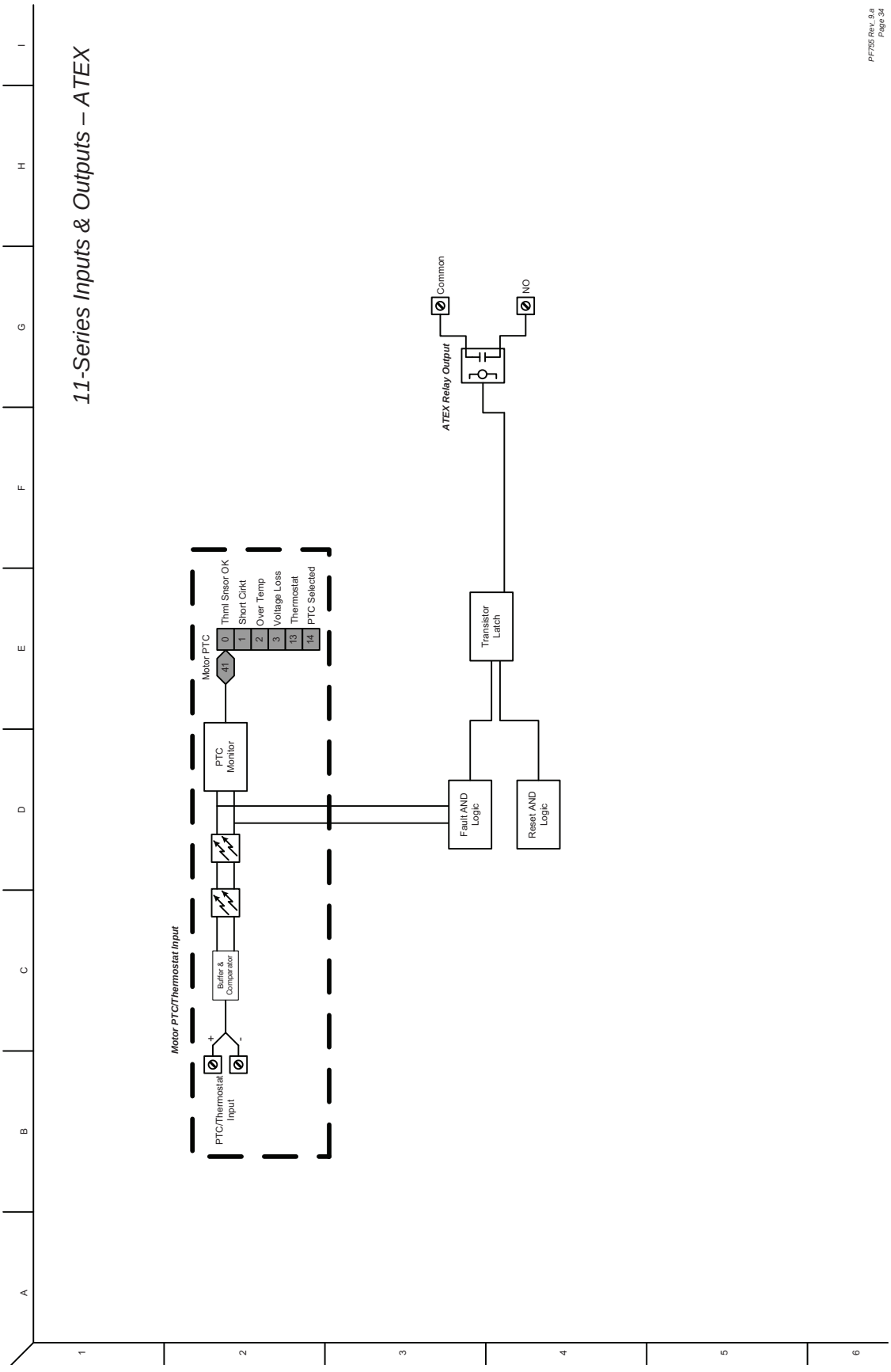

Control Logic

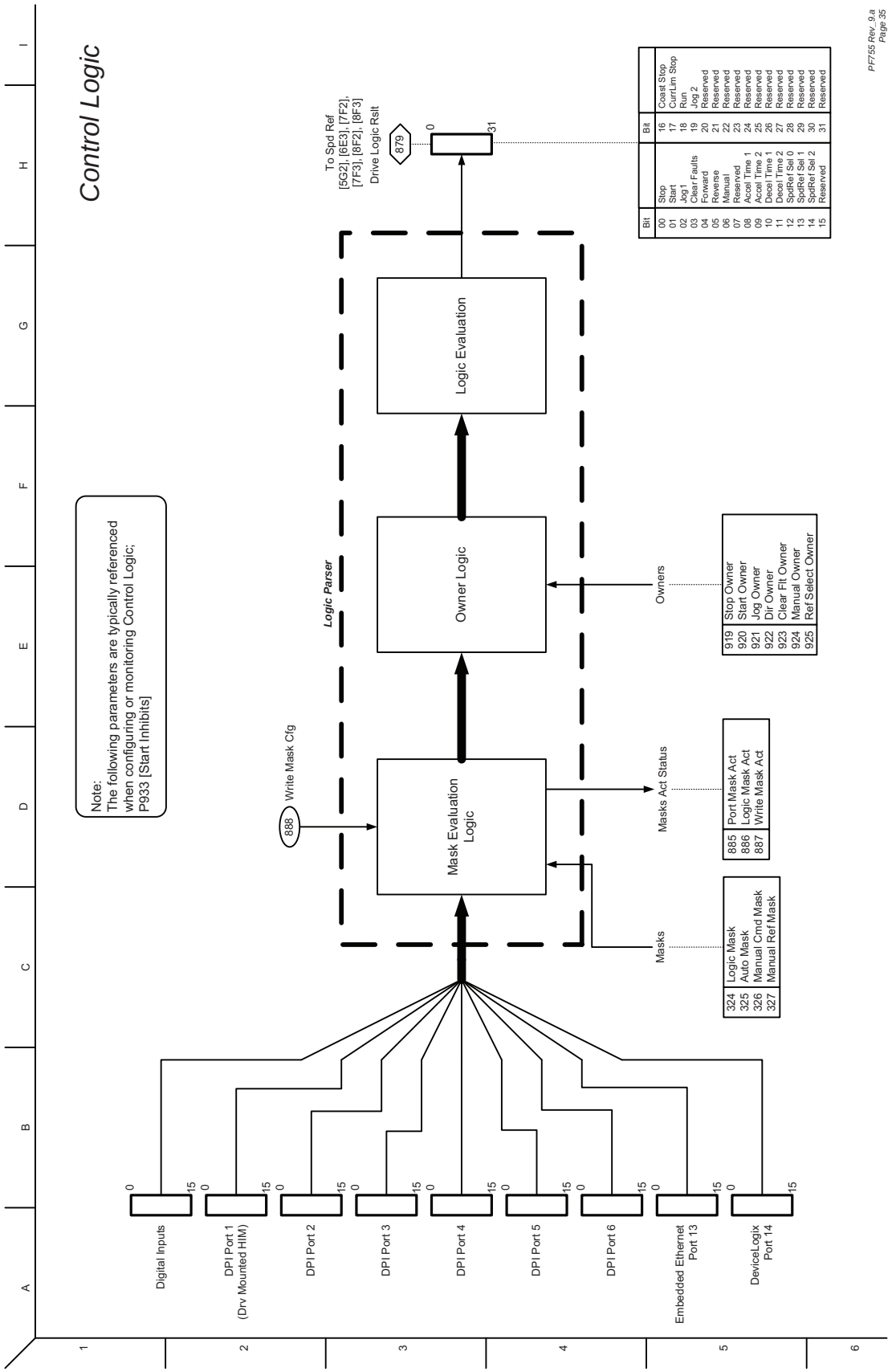

Inverter Overload IT

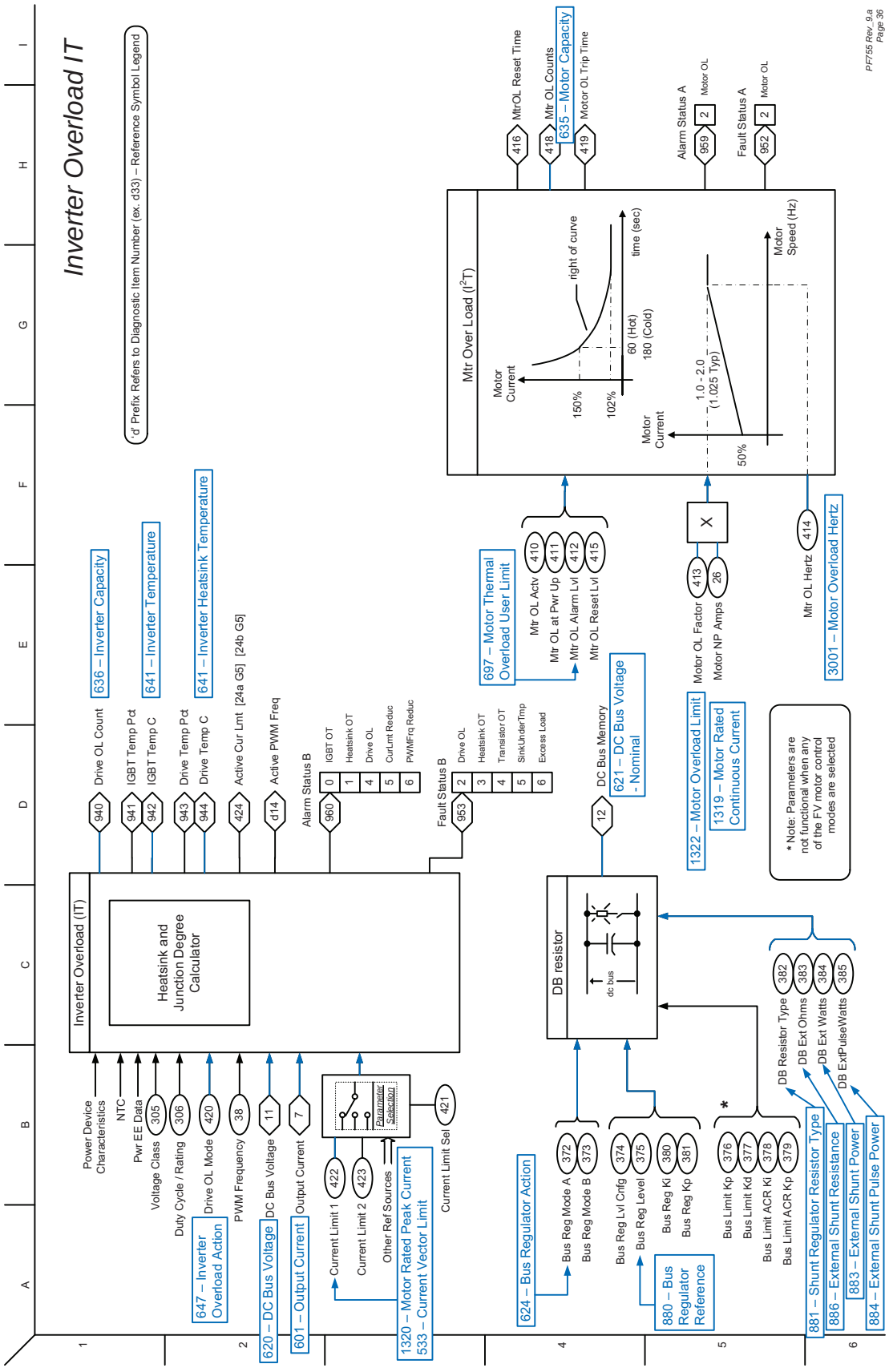

Friction Compensation

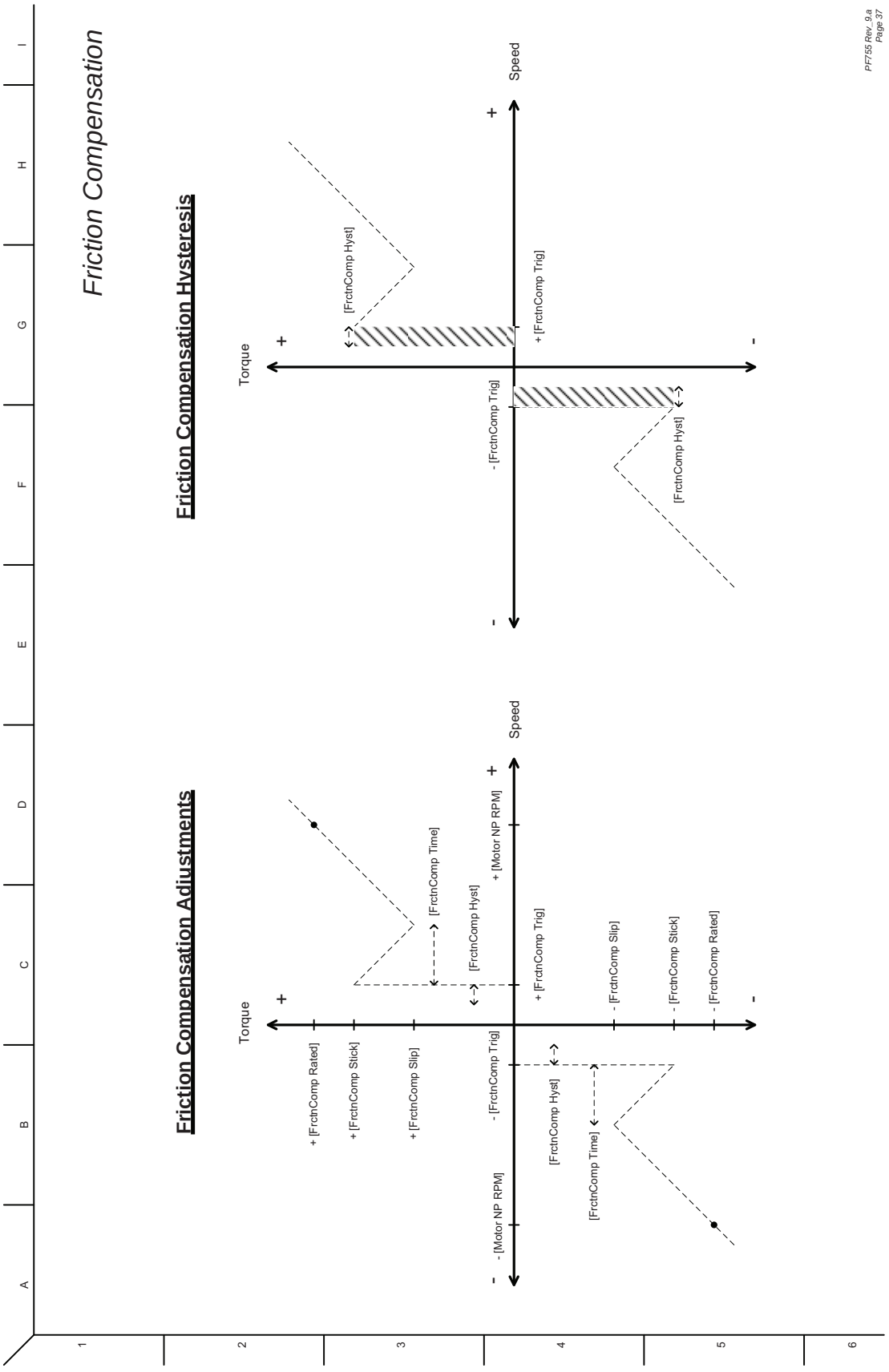

Variable Boost Voltage Overview – Function Inputs/Outputs

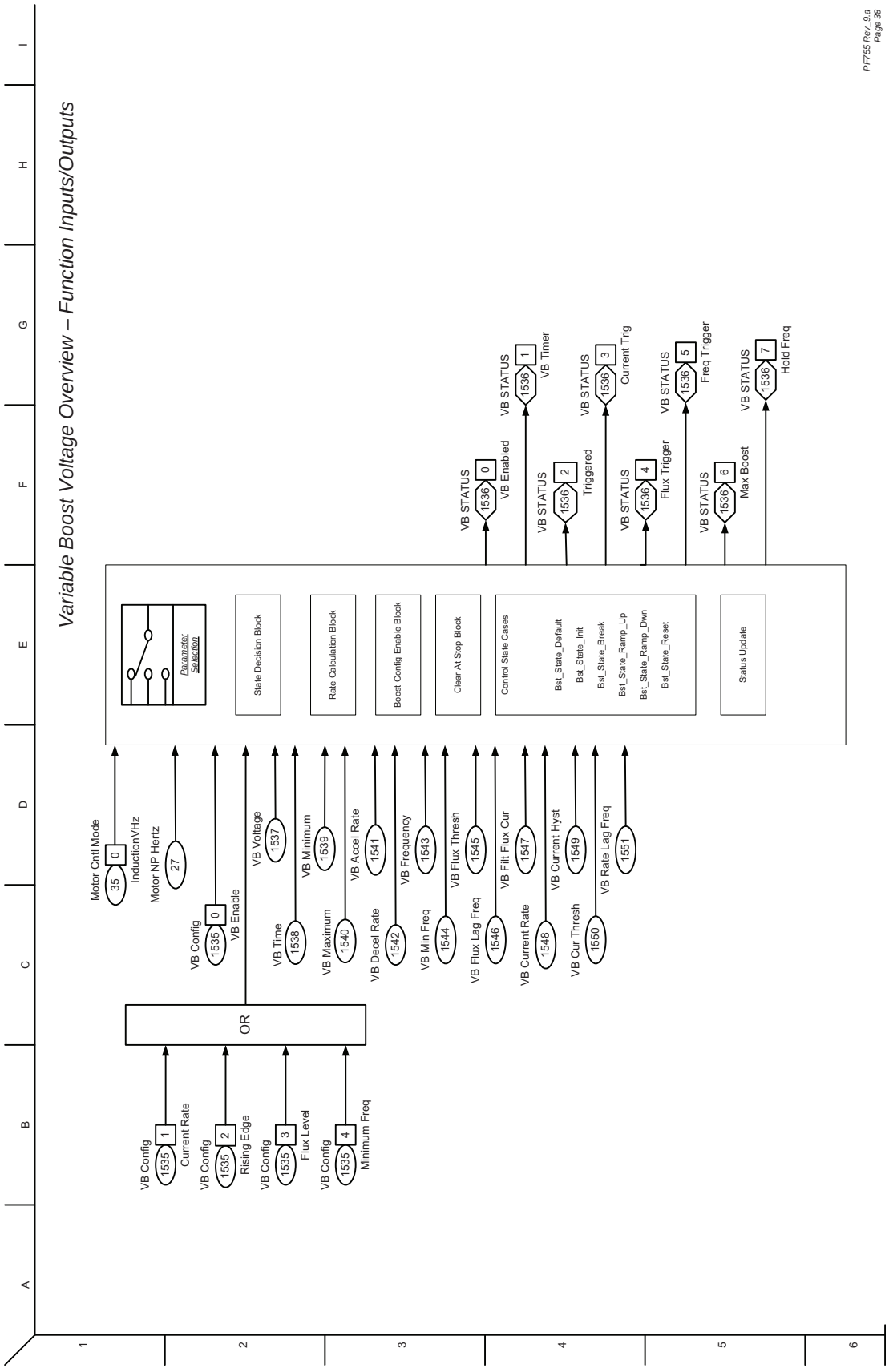

Diagnostic Tools

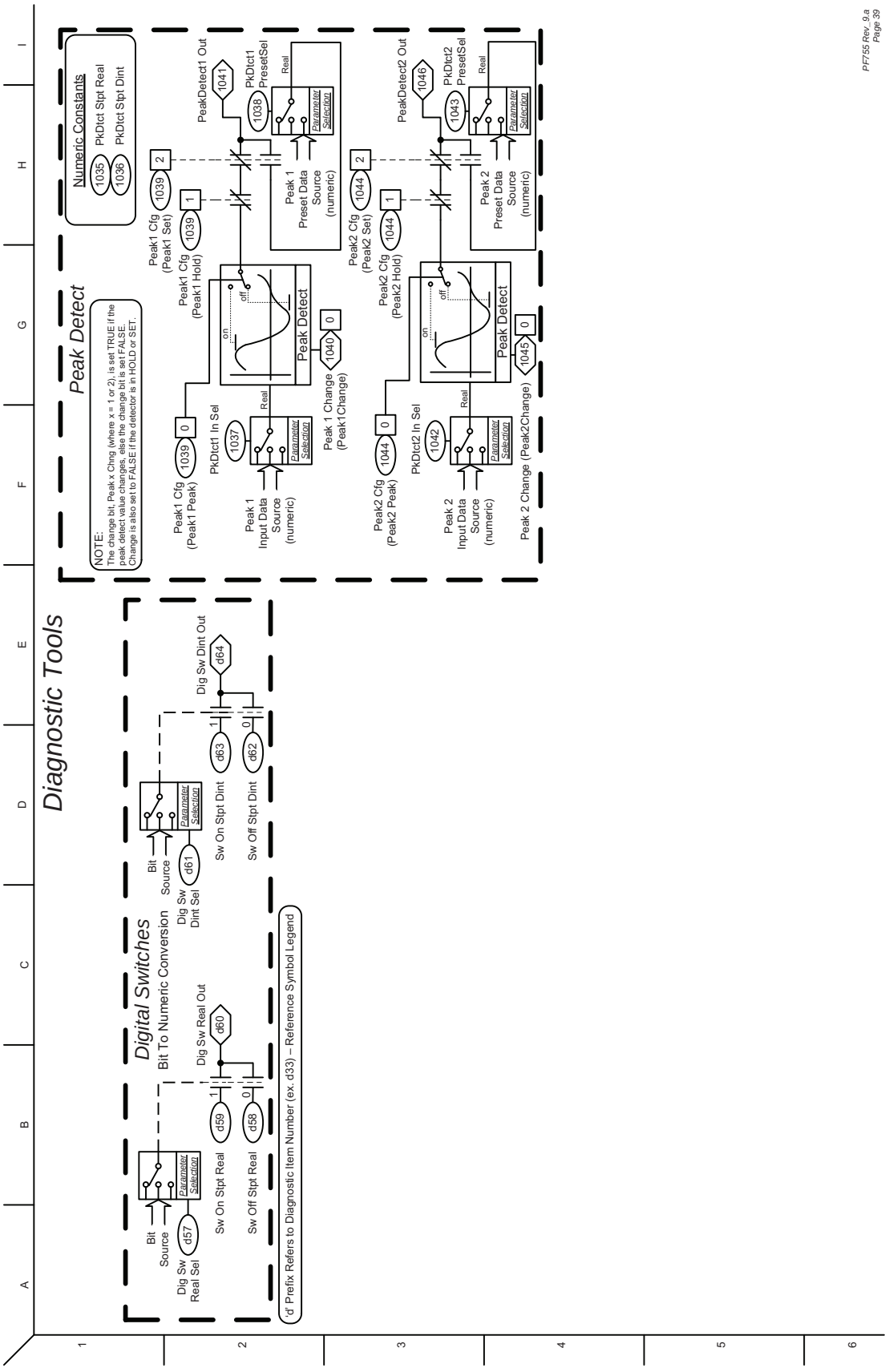

High Speed Trending Wizard

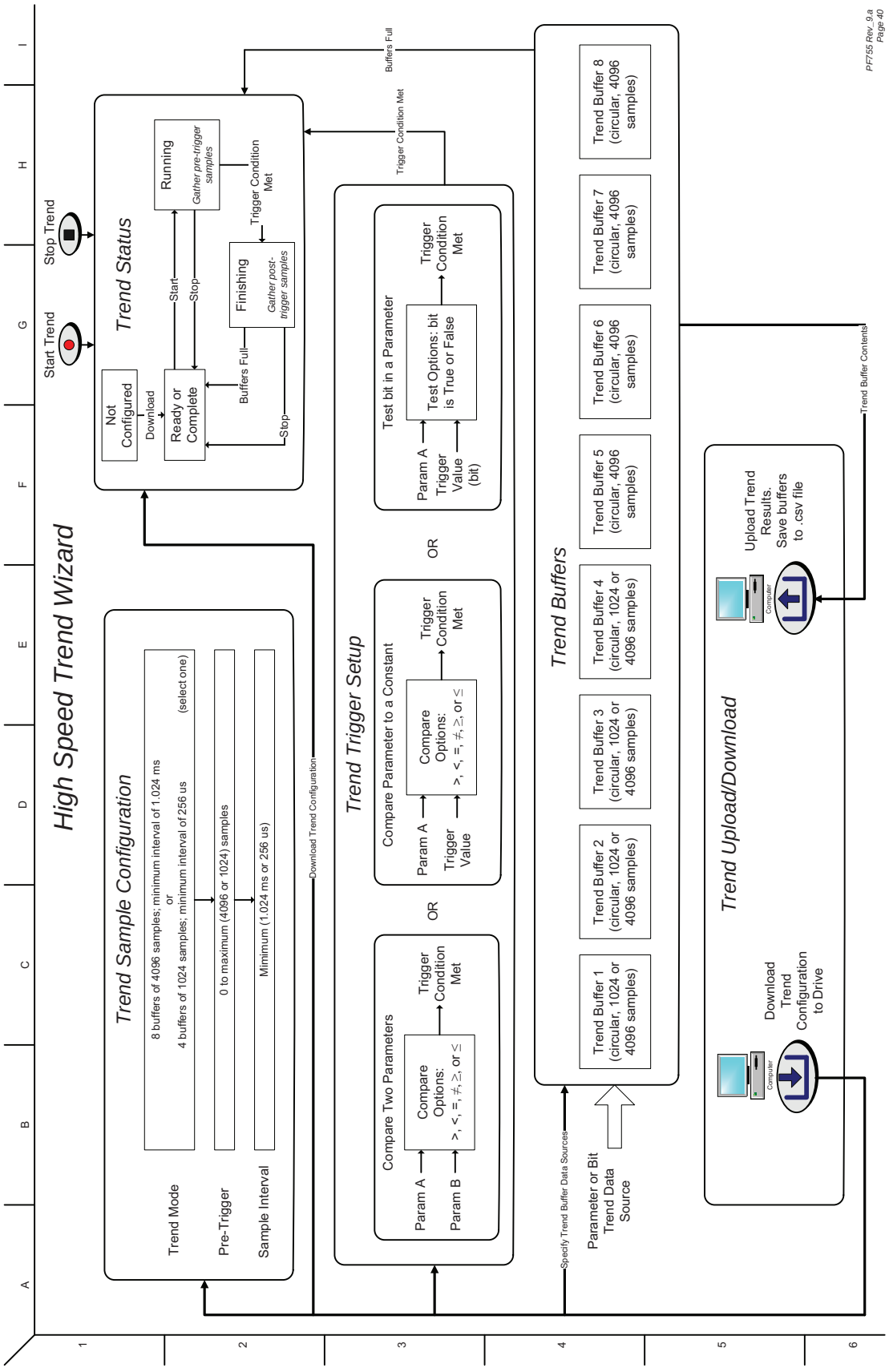

PowerFlex 755 Standard and Safety Drive Module Optional Attributes

The following table specifies what optional attribute and corresponding control mode functionality is supported by a PowerFlex 755 drive module when using the Logix Designer application.

Y = The attribute/enum/bit is supported

N = The attribute/enum/bit is **not** supported

R = The attribute is required

Control Modes

- N = No Control Mode
- F = Frequency Control Mode
- P = Position Control Mode
- V = Velocity Control Mode
- T = Torque Control Mode

For more information on the Control Modes, see Integrated Motion on the Ethernet/IP Network Reference Manual, publication MOTION-RM003.

The Integrated Motion on the Ethernet/IP Network Reference Manual provides a programmer with details about the Integrated Motion on the Ethernet/IP Network Control Modes, Control Methods, and AXIS_CIP_DRIVE Attributes.

Table 29 - Conditional Implementation Key

Key	Description
AOP	Special device specific semantics needed from AOP
Co	Controller only attribute (controller attribute that resides only in controller)
C/D	Yes = The attribute is replicated in the drive
CScale	Motion Scaling Configuration set to Controller Scaling
Derived	Implementation rules follow another attribute
Dr	Drive replicated attribute (controller attribute that is replicated in drive)
Drive Scaling	Drive device supports drive scaling functionality
DScale	Motion Scaling Configuration set to Drive Scaling
E21	EnDat 2.1® (feedback type)
E22	EnDat 2.2® (feedback type)
E	Encoder-based control, a feedback device is present
!E	Encoderless or sensorless control, a feedback device in not present
HI	Hiperface® (feedback type)

Table 29 - Conditional Implementation Key

Key	Description
IM	Rotary or Linear Induction Motor (motor type)
Linear Absolute	Feedback Unit - meter; Feedback n Startup Method- absolute
Linear Motor	Linear PM motor or Linear Induction motor (motor type)
LT	LDT or Linear Displacement Transducer (feedback type)
NV	Motor NV or Drive NV (motor data source)
0-Bits	Optional bits associated with bit mapped attribute
0-Enum	Optional enumerations associated with attribute
PM	Rotary or Linear Permanent Magnet motor (motor type)
Rotary Absolute	Feedback Unit - rev; Feedback n Startup Method- absolute
Rotary Motor	Rotary PM motor or Rotary Induction motor (motor type)
SC	Sine/Cosine (feedback type)
SL	Stahl SSI (feedback type)
SS	SSI (feedback type)
TM	Tamagawa (feedback type)
TP	Digital Parallel (feedback type)
TT	Digital AqB (feedback type)

Table 30 - PowerFlex 755 Safety Drive Module Optional Attributes

ID	Access	Attribute	N	F	P	V	T	Conditional Implementation
19	Set	Axis Features	R	R	R	R	R	0-Bits 0 = Fine Interpolation (Y) 1 = Registration Auto-rearm (Y) 2 = Alarm Log (Y) 5 = Hookup Test (Y) 6 = Commutation Test (Y) 7 = Motor Test (Y) 8 = Inertia Test (Y) 9 = Sensorless Control (Y)
30	Set	Axis Configuration	R	R	R	R	R	0-Enum 0 = Feedback Only (N) 1 = Frequency Control (Y) 2 = Position Loop (Y) 3 = Velocity Loop (Y) 4 = Torque Loop (Y)
31	Set	Feedback Configuration	R	R	R	R	R	0-Enum 0 = No Feedback (V/Y)(T/Y) 3 = Load Feedback (PVT/N) 4 = Dual Feedback (P/Y) 8 = Dual Integrator Feedback (P/Y)
45	Set	Motion Scaling Configuration	R	R	R	R	R	0-Enum 1 = Drive Scaling (N)
1310/251	Set	Motor Catalog Number	-	N	N	N	N	Dr NV

Table 30 - PowerFlex 755 Safety Drive Module Optional Attributes

ID	Access	Attribute	N	F	P	V	T	Conditional Implementation
1313	Set	Motor Data Source	-	R	R	R	R	0-Enum 1 = Database (Y) 2 = Drive NV (Y) 3 = Motor NV (N)
1315	Set	Motor Type	-	R	R	R	R	0-Enum 1 = Rotary Permanent Magnet (Y) 2 = Rotary Induction (Y) 3 = Linear Permanent Magnet (N) 4 = Linear Induction (N)
1317	Set	Motor Polarity	-	Y	Y	Y	Y	
1320	Set	Motor Rated Peak Current	-	N	N	N	N	N-IM
1321	Set	Motor Rated Output Power	-	Y	Y	Y	Y	Y-IM
1322	Set	Motor Overload Limit	-	Y	Y	Y	Y	
1323	Set	Motor Integral Thermal Switch	-	N	N	N	N	
1324	Set	Motor Max Winding Temperature	-	N	N	N	N	
1325	Set	Motor Winding To Ambient Capacitance	-	N	N	N	N	
1326	Set	Motor Winding To Ambient Resistance	-	N	N	N	N	
2310	Set	PM Motor Flux Saturation	-	N	N	N	N	PM Motor only
1339	Set	PM Motor Rated Torque	-	N	N	N	N	Rotary PM Motor only
1340	Set	PM Motor Torque Constant	-	N	N	N	N	Rotary PM Motor only
1342	Set	PM Motor Rated Force	-	N	N	N	N	Rotary PM Motor only
1343	Set	PM Motor Force Constant	-	N	N	N	N	Rotary PM Motor only
1330	Set	Rotary Motor Inertia	-	N	Y	Y	N	Rotary Motor only
1332	Set	Rotary Motor Max Speed	-	N	N	N	N	Rotary Motor only
1333	Set	Rotary Motor Damping Coefficient	-	N	N	N	N	Rotary Motor only
2311	Set	Rotary Motor Fan Cooling Speed	-	N	N	N	N	Rotary Motor only
2312	Set	Rotary Motor Fan Cooling Derating	-	N	N	N	N	Rotary Motor only
1336	Set	Linear Motor Mass	-	N	N	N	N	Linear Motor only
1337	Set	Linear Motor Max Speed	-	N	N	N	N	Linear Motor only
1338	Set	Linear Motor Damping Coefficient	-	N	N	N	N	Linear Motor only
2313	Set	Linear Motor Integral Limit Switch	-	N	N	N	N	Linear Motor only
1349	Set	Induction Motor Magnetization Reactance	-	N	N	N	N	Ind Motor only
1350	Set	Induction Motor Rotor Resistance	-	N	N	N	N	Ind Motor only
1352	Set	Induction Motor Rated Slip Speed	-	Y	Y	Y	N	Ind Motor only
1370	Set	Load Type	N	N	N	N	N	DScale
1371	Set	Transmission Ratio Input	N	N	N	N	N	DScale
1372	Set	Transmission Ratio Output	N	N	N	N	N	DScale
1373	Set	Actuator Type	N	N	N	N	N	DScale
1374	Set	Actuator Lead	N	N	N	N	N	DScale
1375	Set	Actuator Lead Unit	N	N	N	N	N	DScale
1376	Set	Actuator Diameter	N	N	N	N	N	DScale

Table 30 - PowerFlex 755 Safety Drive Module Optional Attributes

ID	Access	Attribute	N	F	P	V	T	Conditional Implementation
1377	Set	Actuator Diameter Unit	N	N	N	N	N	DScale
44	Set	Feedback Unit Ratio	-	-	Y	N	-	
1401	Get	Feedback 1 Serial Number	N	-	N	N	N	
1414	Set	Feedback 1 Polarity	Y	-	Y	Y	Y	
1415	Set	Feedback 1 Startup Method	R	-	R	R	R	0-Enum 1= Absolute (Y)
1420	Set	Feedback 1 Data Length	Y	-	Y	Y	Y	TP,SS
1421	Set	Feedback 1 Data Code	Y	-	Y	Y	Y	TP,SS
1422	Set	Feedback 1 Resolver Transformer Ratio	N	-	N	N	N	RS
1423	Set	Feedback 1 Resolver Excitation Voltage	N	-	N	N	N	RS
1424	Set	Feedback 1 Resolver Excitation Frequency	N	-	N	N	N	RS
1425	Set	Feedback 1 Resolver Cable Balance	N	-	N	N	N	RS
2400	Set	Feedback 1 Loss Action	N	-	N	N	N	0-Enum 1 = Switch to Sensorless Fdbk (N) 2 = Switch to Redundant Fdbk (N)
2403	Set	Feedback 1 Velocity Filter Taps	Y	-	Y	Y	Y	
2404	Set	Feedback 1 Accel Filter Taps	N	-	N	N	N	
1434	Set	Feedback 1 Velocity Filter Bandwidth	Y	-	Y	Y	Y	
1435	Set	Feedback 1 Accel Filter Bandwidth	Y	-	Y	Y	Y	
2405	Set	Feedback 1 Battery Absolute	N	-	N	N	N	TM
1451	Get	Feedback 2 Serial Number	N	-	N	N	N	
1464	Set	Feedback 2 Polarity	Y	-	Y	Y	Y	
1465	Set	Feedback 2 Startup Method	R	-	R	R	R	0-Enum 1 = Absolute (Y)
1470	Set	Feedback 2 Data Length	Y	-	Y	Y	Y	TP,SS
1471	Set	Feedback 2 Data Code	Y	-	Y	Y	Y	TP,SS
1472	Set	Feedback 2 Resolver Transformer Ratio	N	-	N	N	N	RS
1473	Set	Feedback 2 Resolver Excitation Voltage	N	-	N	N	N	RS
1474	Set	Feedback 2 Resolver Excitation Frequency	N	-	N	N	N	RS
1475	Set	Feedback 2 Resolver Cable Balance	N	-	N	N	N	RS
2450	Set	Feedback 2 Loss Action	N	-	N	N	N	0-Enum 1 = Switch to Sensorless Fdbk (N) 2 = Switch to Redundant Fdbk (N)
2453	Set	Feedback 2 Velocity Filter Taps	N	-	N	N	N	
2454	Set	Feedback 2 Accel Filter Taps	N	-	N	N	N	
1484	Set	Feedback 2 Velocity Filter Bandwidth	N	-	N	N	N	
1485	Set	Feedback 2 Accel Filter Bandwidth	N	-	N	N	N	
2455	Set	Feedback 2 Battery Absolute	N	-	N	N	N	TM
365	Get	Position Fine Command	-	-	Y	-	-	
366	Get	Velocity Fine Command	-	-	Y	Y	-	
367	Get	Acceleration Fine Command	-	-	N	N	N	

Table 30 - PowerFlex 755 Safety Drive Module Optional Attributes

ID	Access	Attribute	N	F	P	V	T	Conditional Implementation
370	Set	Skip Speed 1	-	Y	-	-	-	
371	Set	Skip Speed 2	-	Y	-	-	-	
372	Set	Skip Speed 3	-	Y	-	-	-	
373	Set	Skip Speed Band	-	Y	-	-	-	
374	Set*	Ramp Velocity - Positive	-	Y	-	Y	-	Derived
375	Set*	Ramp Velocity - Negative	-	Y	-	Y	-	Derived
376	Set*	Ramp Acceleration	-	Y	-	Y	-	Derived
377	Set*	Ramp Deceleration	-	Y	-	Y	-	Derived
378	Set	Ramp Jerk Control	-	Y	-	Y	-	
380	Set	Flying Start Enable	-	Y	-	Y	-	
445	Set	Position Error Tolerance Time	-	-	Y	-	-	
781	Set	Position Lead Lag Filter Bandwidth	-	-	Y	-	-	
782	Set	Position Lead Lag Filter Gain	-	-	Y	-	-	
783	Set	Position Notch Filter Frequency	-	-	Y	-	-	
446	Set	Position Integrator Control	-	-	R	-	-	0-Bits 1: Auto-Preset (N)
447	Set	Position Integrator Preload	-	-	N	-	-	
790	Set	Velocity Negative Feedforward Gain	-	-	Y	Y	-	
464/321	Set	Velocity Droop	-	Y	Y	Y	-	
465	Set	Velocity Error Tolerance	-	-	N	N	-	
466	Set	Velocity Error Tolerance Time	-	-	N	N	-	
467	Set	Velocity Integrator Control	-	-	R	R	-	0-Bits 1: Auto-Preset (N)
468	Set	Velocity Integrator Preload	-	-	Y	Y	-	
469	Set	Velocity Low Pass Filter Bandwidth	-	-	Y	Y	-	
470/327	Set	Velocity Threshold	N	Y	Y	Y	N	
471	Set	Velocity Lock Tolerance	-	Y	Y	Y	-	
473/325	Set	Velocity Limit - Positive	-	Y	Y	Y	-	
474/326	Set	Velocity Limit - Negative	-	Y	Y	Y	-	
833	Set	SLAT Configuration	-	-	-	Y	-	
834	Set	SLAT Set Point	-	-	-	Y	-	
835	Set	SLAT Time Delay	-	-	-	Y	-	
481	Set	Acceleration Trim	-	-	N	N	N	
482	Get	Acceleration Reference	-	-	N	N	N	
801	Get	Load Observer Acceleration Estimate	-	-	Y	Y	N	
802	Get	Load Observer Torque Estimate	-	-	Y	Y	N	
805	Set	Load Observer Configuration	-	-	Y	Y	N	0-Enum 1= Load Observer Only (Y) 2 = Load Observer with Velocity Estimate (N) 3 = Velocity Estimate Only (N) 4 = Acceleration Feedback (Y)

Table 30 - PowerFlex 755 Safety Drive Module Optional Attributes

ID	Access	Attribute	N	F	P	V	T	Conditional Implementation
806	Set	Load Observer Bandwidth	-	-	Y	Y	N	
807	Set	Load Observer Integrator Bandwidth	-	-	N	N	N	
809	Set	Load Observer Feedback Gain	-	-	Y	Y	N	
485	Set	Acceleration Limit	-	N	N	N	N	
486	Set	Deceleration Limit	-	N	N	N	N	
496	Set	System Inertia	-	-	R	R	N	
825	Set	Backlash Compensation Window	-	-	N	-	-	
498	Set	Friction Compensation Sliding	-	-	N	N	N	
499	Set	Friction Compensation Static	-	-	N	N	N	
500	Set	Friction Compensation Viscous	-	-	N	N	N	
826/421	Set	Friction Compensation Window	-	-	N	-	-	
827	Set	Torque Lead Lag Filter Bandwidth	-	-	Y	Y	N	
828	Set	Torque Lead Lag Filter Gain	-	-	Y	Y	N	
502	Set	Torque Low Pass Filter Bandwidth	-	-	N	N	N	
503	Set	Torque Notch Filter Frequency	-	-	Y	Y	Y	
506	Set	Torque Rate Limit	-	-	N	N	N	
507/334	Set	Torque Threshold	-	-	N	N	N	
508	Set	Overtorque Limit	-	Y	Y	Y	Y	
509	Set	Overtorque Limit Time	-	Y	Y	Y	Y	
510	Set	Undertorque Limit	-	Y	Y	Y	Y	
511	Set	Undertorque Limit Time	-	Y	Y	Y	Y	
521	Get	Operative Current Limit	-	-	N	N	N	
522	Get	Current Limit Source	-	-	N	N	N	
524	Get	Current Reference	-	-	N	N	N	
525	Get	Flux Current Reference	-	-	N	N	N	
840	Set	Current Disturbance	-	-	N	N	N	
527	Get	Current Error	-	-	N	N	N	
528	Get	Flux Current Error	-	-	N	N	N	
529	Get	Current Feedback	-	-	Y	Y	Y	
530	Get	Flux Current Feedback	-	-	Y	Y	Y	
553	Set	Current Vector Limit	-	Y	N	N	N	
554	Set	Torque Loop Bandwidth	-	-	N	N	N	
555	Set	Torque Integral Time Constant	-	-	N	N	N	
556	Set	Flux Loop Bandwidth	-	-	N	N	N	
557	Set	Flux Integral Time Constant	-	-	N	N	N	
558	Set	Flux Up Control	-	Y	Y	Y	Y	Ind Motor only 0-Enum 1 = Manual Delay (Y) 2 = Automatic Delay (Y)
559	Set	Flux Up Time	-	Y	Y	Y	Y	Ind Motor only

Table 30 - PowerFlex 755 Safety Drive Module Optional Attributes

ID	Access	Attribute	N	F	P	V	T	Conditional Implementation
562	Set	Commutation Self-Sensing Current	-	-	N	N	N	PM Motor only 0-Value = #
563	Set	Commutation Polarity	-	-	N	N	N	PM Motor only
250	Set	Feedback Commutation Aligned	-	-	Y	Y	Y	0-Enum 2 = Motor Offset (N) 3 = Self-Sense (Y)
570	Set	Frequency Control Method	-	R	-	-	-	0-Enum 128 = Fan/Pump Volts/Hertz (Y) 129 = Sensorless Vector (Y) 130 = Sensorless Vector Economy (Y)
600	Get	Output Frequency	-	R	Y	Y	Y	
610	Set	Stopping Action	-	R	R	R	R	0-Enum 2 = Ramped Decel Disable (FPV/Y) 3 = Current Decel Hold (PV/N) 4 = Ramped Decel Hold (PV/Y) 128 = DC Injection Brake (IM/Y) 129 = AC Injection Brake (IM/Y)
612	Set	Stopping Time Limit	-	-	N	N	N	
613/354	Set	Resistive Brake Contact Delay	-	N	N	N	N	PM Motor only
614	Set	Mechanical Brake Control	-	N	N	N	N	
615	Set	Mechanical Brake Release Delay	-	N	N	N	N	
616	Set	Mechanical Brake Engage Delay	-	N	N	N	N	
870	Set	DC Injection Brake Current	-	Y	Y	Y	Y	Ind Motor only
872	Set	DC Injection Brake Time	-	Y	Y	Y	Y	Ind Motor only
871	Set	Flux Braking Enable	-	Y	Y	Y	Y	Ind Motor only
627	Set	Power Loss Action	-	Y	Y	Y	Y	0-Enum 2 = Decel Regen (Y)
628	Set	Power Loss Threshold	-	Y	Y	Y	Y	
629	Set	Shutdown Action	-	N	N	N	N	0-Enum 1 = Drop DC Bus (N)
630	Set	Power Loss Time	-	Y	Y	Y	Y	
637	Get	Converter Capacity	-	N	N	N	N	
638/262	Get	Bus Regulator Capacity	-	N	N	N	N	
646	Set	Motor Overload Action	-	N	N	N	N	0-Enum 1 = Current Foldback (N)
647	Set	Inverter Overload Action	-	Y	Y	Y	Y	0-Enum 1 = Current Foldback (Y) 128 = Reduce PWM Rate (Y) 129 = PWM Foldback (Y)
659	Get	CIP Axis Alarms	Y	Y	Y	Y	Y	
904	Get	CIP Axis Alarms - RA	Y	Y	Y	Y	Y	
695	Set	Motor Overspeed User Limit	-	Y	Y	Y	Y	
697	Set	Motor Thermal Overload User Limit	-	Y	Y	Y	Y	
699	Set	Inverter Thermal Overload User Limit	-	N	N	N	N	

Table 30 - PowerFlex 755 Safety Drive Module Optional Attributes

ID	Access	Attribute	N	F	P	V	T	Conditional Implementation
706	Set	Feedback Noise User Limit	N	N	N	N	N	
707	Set	Feedback Signal Loss User Limit	N	N	N	N	N	
708	Set	Feedback Data Loss User Limit	N	N	N	N	N	
730	Get	Digital Inputs	-	Y	Y	Y	Y	
731	Set	Digital Outputs	-	N	N	N	N	
732/267	Get	Analog Input 1	-	N	N	N	N	
733/268	Get	Analog Input 2	-	N	N	N	N	
734	Set	Analog Output 1	-	N	N	N	N	
735	Set	Analog Output 2	-	N	N	N	N	
750	Set	Local Control	N	N	N	N	N	0-Enum 1 = Conditionally Allowed (N) 2 = Allowed (N)
980/242	Get	Guard Status	-	Y	Y	Y	Y	
981/243	Get	Guard Faults	-	Y	Y	Y	Y	

A

AC induction motors
recommended 357
Accel/Decel 124
Accel/Decel Time 16
Adjustable Voltage 17
Alarms 155
Analog I/O 105
Analog Input
Square Root 111
Analog Inputs 105
Analog Output 114
Analog Outputs 113
Analog Scaling 107
Auto Restart 25
Auto/Manual 27
Autotune 35
Auxiliary Fault 121
Auxiliary Power Supply 41
auxiliary power supply option module
installation and configuration 347
axis configuration
control modes 307

B

Braking 216
bulletin HPK-series motors
recommended 359
Bus Memory 158
Bus Regulation 41
Bus Regulation Mode 125

C

Carrier Frequency 196
Clear Fault 121
Coarse Update Rate 301
Coast Stop 121
Compensation 192
Configuration Conflicts 127
configure
hardware over travel limits 316
incremental encoder feedback with an MPx motor 372
MDS instruction 302
Configureation
Analog Output 114
Control Mode
axis attributes
no control mode 419
position control mode 419
torque control mode 419
velocity control mode 419
control modes
axis configuration 307
Integrated Motion on the EtherNet/IP Network 301
Controller, DriveLogix 10
Conventions, Manual 11
Current Limit 156
Current Limit Stop 121

D

Data Packets
lost 301
DC Bus Voltage 158
Decel Time 16
Detection
Input Loss 112
DHCP persistence
IP address assignment 315
Dig Out Invert
No. 226 – Main Control Board 147
No. 6 – Option Module 147
Dig Out Setpoint
No. 227 – Main Control Board 142
No. 7 – Option Module 142
Dig Out Sts
No. 225 – Main Control Board 149
No. 5 – Option Module 150
Digital Inputs 119
Digital Outputs 130
Digital Outputs Parameters 142, 147, 149
Drive Nonvolatile Memory 308
Drive NV option 308
Drive Overload 158
DriveLogix™ Controller 10
Drives Technical Support 11
dual loop control
application 309
configuration 309
Dual-Port EtherNet/IP option module 315
install and configure 347
IP address assignment 315
port assignment 315
dynamic brake
configure for Integrated Motion on the EtherNet/IP Network 347
Dynamic Braking 197
dynamic IP address assignment by port 315

E

Enable 121
ETAP. *See* Dual-Port EtherNet/IP option module

F

Faults 162
Feedback Devices 54
feedback option modules
install and configure 346
Flux Braking 216

Flux Regulator 218
Flux Up 218
Flux Up Enable (No. 43) 220
Flux Up Time (No. 44) 220
Flying Start 54
Forward/Reverse 122
  Decel Limit 126
Forward/Revese
  End Limit 126
frequency control
  RSLogix 5000 instance to parameter cross reference 319

G

General Precautions 12

H

Hand-Off-Auto Start 124
hardware over travel limits
  configure for Integrated Motion on the EtherNet/IP Network 316
Human Interface Module Removal 52

I

incremental encoder feedback with an MPx motor
  configure 372
induction motor data
  RSLogix 5000 instance to parameter cross reference 327
induction motor model
  RSLogix 5000 instance to parameter cross reference 327
Input Loss Detection 112
Input Phase Loss Detection 166
Inputs
  Analog 105
  Digital 119
Integrated Architecture Builder software 300
Integrated Motion on the EtherNet/IP Network
  control logic block diagram 413
  control modes 301
  diagnostic tools block diagram 417
  flux vector overview block diagram 377
  friction compensation block diagram 415
  high speed trending wizard block diagram 418
  inputs and outputs, analog block diagram 409
  inputs and outputs, digital block diagram 408
  inverter overload IT block diagram 414
  MOP control block diagram 407
  option modules supported 346
  position control, aux functions block diagram 389
  position control, homing block diagram 393
  position control, phase locked loop block diagram 390
  position control, position CAM block diagram 391
  position control, profiler/indexer (sheet 1) block diagram 392
  position control, profiler/indexer (sheet 2) block diagram 393
  position control, regulator block diagram 388
  position control/aux functions, position oriented torque boost block diagram 396
  position control/aux functions, roll position indicator block diagram 394
  process control (sheet 1) block diagram 405
  process control (sheet 2) block diagram 406
  safety option module restrictions 346
  speed control reference (sheet 1) block diagram 381
  speed control reference (sheet 2) block diagram 382
  speed control reference (sheet 3) block diagram 383
  speed control reference (sheet 4) block diagram 384
  speed control reference (sheet 5) block diagram 385
  speed control, reference block diagram 387
  speed control, reference overview block diagram 380
  speed control, regulator (flux vector) block diagram 386
  speed/position feedback block diagram 379
  system tuning 363
  torque control overview, induction motor and surface permanent magnet motor block diagram 397
  torque control overview, interior permanent magnet motor block diagram 398
  torque control, current, induction motor and surface permanent magnet motor block diagram 401
  torque control, current, interior permanent magnet motor block diagram 402
  torque control, inertia adaption block diagram 403
  torque control, load observer/estimator block diagram 404
  torque control, reference scale and trim block diagram 399
  torque control, torque block diagram 400
  variable boost voltage overview, function inputs/outputs block diagram 416
  VF (V/Hz), SV overview block diagram 378
IP address assignment
  Dual-Port EtherNet/IP option module 315

J

Jog 123
Jog Forward Jog Reverse 122

L

Last StrtInhibit (No. 934) 95
Linear Topology
Integrated Motion on the EtherNet/IP Network 342
Linear/Star Topology
Integrated Motion on the EtherNet/IP Network 344
Load
RSLogix 5000 instance to parameter cross reference 334
Load Compliance
RSLogix 5000 instance to parameter cross reference 335
Load Observer
RSLogix 5000 instance to parameter cross reference 337
Lost Data Packets 301

M

Manaual Control 123
Manual Conventions 11
MAS instruction 304
MDS instruction
configure 301
decrease speed sample code 303
increase speed sample code 303
ramp attributes 304
ramp attributes sample code 305
start sample code 302
torque mode sample code 304
Minimum Coarse Update Rate 301
MOP Increment/Decrement 124
Motion Analyzer software 300
Motion Axis Stop. *See* MAS instruction
Motion Drive Start. *See* MDS instruction
Motion Servo Off. *See* MSF instruction
Motor Feedback
RSLogix 5000 instance to parameter cross reference 331
Motor Load Feedback
RSLogix 5000 instance to parameter cross reference 332
Motor Overload 168
Motor Thermistor 152
Motor Types 235
MSF instruction 304
Mtr Options Cfg (No. 40) 25

N

Network Topologies
Integrated Motion on the EtherNet/IP Network 341
Nonvolatile Memory 308
Notch Filter 244

O

Option Modules
supported for Integrated Motion on the EtherNet/IP Network 346
Outputs
Analog 113, 114
Digital 130
Overload 158, 168
Overspeed Limit 172
Owners 70

P

Password 173
Permanent Magnet Motor
evaluation 361
specifications 361
Permanent Magnet Motor Data 308
RSLogix 5000 instance to parameter cross reference 329
Permanent Magnet Motor Model
RSLogix 5000 instance to parameter cross reference 329
Permanent Magnet Motors
recommended 358
PID Cfg (No. 1065) 79
PID Enable 125
PID Hold 126
PID Invert 126
PID Loop 76
PID Reset 126
PID Status (No. 1089) 85
Port Assignment
Dual-Port EtherNet/IP option module 315
position loop
RSLogix 5000 instance to parameter cross reference 325
Position Mode 306
Positive/Negative Hardware Over-travel 127
Power Loss 72, 125
Power Loss Mode 125
Power Tab
RSLogix 5000 instance to parameter cross reference 337
Precautions, General 12
Precharge 125
Process PID Loop 76
Process PID Parameters 79
PTC Motor Thermistor Input 152
PWM Frequency 196

R

Real Time Clock 174
Recommended
AC induction motors 357
bulletin HPK-series motors 359
permanent magnet motors 358
Reflected Wave 179
Regen Power Limit 247
Restart, Auto 25
Ring topology
Integrated Motion on the EtherNet/IP Network 343
Ring/star topology
Integrated Motion on the EtherNet/IP Network 345
Run 122
Run Forward/Run Reverse 122

S

safety option modules
restrictions for Integrated Motion on the EtherNet/IP Network 346
Scaling, Analog 107
Security 185
Shear Pin 188
shunt regulator
configuration for Integrated Motion on the EtherNet/IP Network 347
Signal Loss 112
SLAT. *See* Speed Limited Adjustable Torque
Slip Compensation 192
Slip Regulator 194
Software
Integrated Architecture Builder 300
Motion Analyzer 300
Speed Limited Adjustable Torque
configure for Integrated Motion on the EtherNet/IP Network 353
Speed Reference 251
Speed Regulation 260
Speed Select 123
Speed Torque Position 266
Speed Torque Position Mode 124
Square Root
Analog Input 111
Star Topology
Integrated Motion on the EtherNet/IP Network 341
Start 122
Start Inhibits (No. 933) 95
Status 127
Stop 121
Stop Mode 124
Support, Product 11
System Tuning
Integrated Motion on the EtherNet/IP Network 363

T

Technical Support 11
Thermistor 152
Third-party permanent magnet motors
data modifications 361
Torque
Mode 306
Position 266
Reference 262
Torque Loop
RSLogix 5000 instance to parameter cross reference 323
torque overload capability 345
Torque Reference 262
Torque Setpoint 126

V

Velocity Control
RSLogix 5000 instance to parameter cross reference 321
Velocity Mode 306

Rockwell Automation Support

Rockwell Automation provides technical information on the Web to assist you in using its products. At http://www.rockwellautomation.com/support you can find technical and application notes, sample code, and links to software service packs. You can also visit our Support Center at https://rockwellautomation.custhelp.com/ for software updates, support chats and forums, technical information, FAQs, and to sign up for product notification updates.

In addition, we offer multiple support programs for installation, configuration, and troubleshooting. For more information, contact your local distributor or Rockwell Automation representative, or visit http://www.rockwellautomation.com/services/online-phone.

Installation Assistance

If you experience a problem within the first 24 hours of installation, review the information that is contained in this manual. You can contact Customer Support for initial help in getting your product up and running.

United States or Canada	1.440.646.3434
Outside United States or Canada	Use the Worldwide Locator at http://www.rockwellautomation.com/rockwellautomation/support/overview.page, or contact your local Rockwell Automation representative.

New Product Satisfaction Return

Rockwell Automation tests all of its products to help ensure that they are fully operational when shipped from the manufacturing facility. However, if your product is not functioning and needs to be returned, follow these procedures.

United States	Contact your distributor. You must provide a Customer Support case number (call the phone number above to obtain one) to your distributor to complete the return process.
Outside United States	Please contact your local Rockwell Automation representative for the return procedure.

Documentation Feedback

Your comments will help us serve your documentation needs better. If you have any suggestions on how to improve this document, complete this form, publication RA-DU002, available at http://www.rockwellautomation.com/literature/.

Rockwell Automation maintains current product environmental information on its website at http://www.rockwellautomation.com/rockwellautomation/about-us/sustainability-ethics/product-environmental-compliance.page.

Rockwell Otomasyon Ticaret A.Ş., Kar Plaza İş Merkezi E Blok Kat:6 34752 İçerenköy, İstanbul, Tel: +90 (216) 5698400

www.rockwellautomation.com

Power, Control and Information Solutions Headquarters

Americas: Rockwell Automation, 1201 South Second Street, Milwaukee, WI 53204-2496 USA, Tel: (1) 414.382.2000, Fax: (1) 414.382.4444
Europe/Middle East/Africa: Rockwell Automation NV, Pegasus Park, De Kleetlaan 12a, 1831 Diegem, Belgium, Tel: (32) 2 663 0600, Fax: (32) 2 663 0640
Asia Pacific: Rockwell Automation, Level 14, Core F, Cyberport 3, 100 Cyberport Road, Hong Kong, Tel: (852) 2887 4788, Fax: (852) 2508 1846

Publication 750-RM002C-EN-P - February 2016

Supersedes Publication 750-RM002B-EN-P - September 2013

Copyright © 2016 Rockwell Automation, Inc. All rights reserved. Printed in the U.S.A.

dV/dt OUTPUT FILTER



Peak voltages on a 480 V system can reach 1,600 V, and on a 600 V system can reach 2,100 V. These high peak voltages will cause a rapid breakdown of motor insulation, leading to motor failure. The V1K dV/dt filter is an output device that prevents voltage spikes from variable frequency drives (VFD) from exceeding 1,000 V. The V1K minimizes these voltage wave amplitudes and slows the rate of voltage increases.

Reflective Wave Phenomenon

Voltage wave reflection is a function of the voltage rise time (dV/dt) and the length of the motor cables. If the impedance on either end of the cable run does not match, the voltage pulses will be reflected back in the direction from which it arrived. As these reflected waves encounter other waves, their values add, causing higher peak voltage. As wire length or carrier frequency increases, the overshoot peak voltage also increases. V1K dV/dt filter reduces these peak voltages to prevent damage to motors and cables.

Features of V1K Filter

- Limits voltage spikes to below 1,000 V for applications with lead lengths up to 1,000 ft
- Reduces motor heating, noise and vibration.
- Prevents motor failure with protection against motor insulation breakdown.
- Reduces Common Mode by a minimum of 30%.
- Improves system productivity by increasing motor bearing life
- 240 - 600 VAC system compatibility
- 2 - 750 Amps range
- Heavy Duty model available for higher carrier frequency (6 kHz)

Typical VFD/Motor Applications

- Submersible pumps
- Wastewater pumping stations
- HVAC cooling systems
- Process automation facilities
- Agriculture irrigation systems

c UL us LISTED

MADE IN THE UNITED STATES OF AMERICA

Technical Specifications

Voltage Ratings	2 - 750 Amps; 208 - 600 VAC
Carrier Frequency	2 - 4 kHz (consult TCI for applications over 8 kHz if the cable lengths exceed 400 feet)
Insulation Rating	600 V Class
Insulation Class	Class H (180° C) or Class R (220° C)
Efficiency	≥ 98%
Lead Length	Up to 1,000 ft (consult factory for applications above 1,000 feet)
Fundamental Frequency	0 - 60 Hz (derating for applications over 60 - 120 Hz fundamental if the cable lengths exceed 400 feet. Consult TCI)
Environmental Conditions	
Ambient Temperature	Enclosed: 40° C (104° F)
Operating Altitude	2,000 m (6,600 ft) Derating necessary above 2,000 m
Reference Technical Standards	
Agency Approvals	cULus Listed
Enclosure Options	Open, UL Type 1, UL Type 3R
Warranty	One year of useful service, not to exceed 18 months from date of shipment.

NOTE: The V1K is classified as an UL508 Auxiliary Device, not an industrial control panel. Under UL and NFPA/NEC guidelines, an SCCR rating or marking is not required.

Part Numbering

V1K 80 A01 EX

Series:

Current Rating (amps):

Enclosure:
- A00 - Open
- A01 - UL Type 1
- A03 - UL Type 3R

Option A:
- (Blank) - No Options
- EX - Heavy Duty Model

Voltage Without V1K

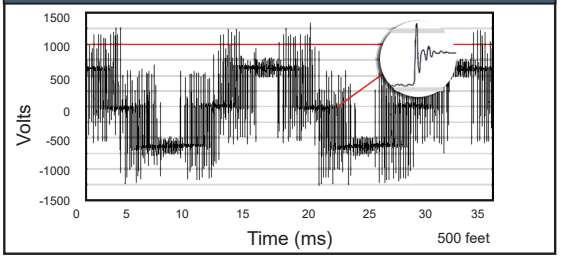

Voltage With V1K

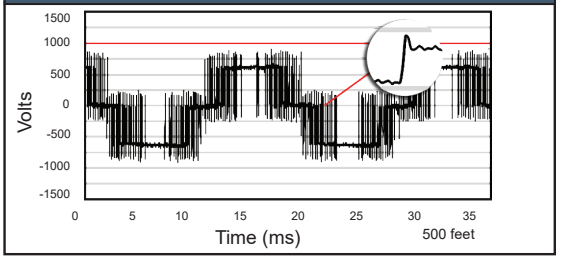

Multiple Motor Application

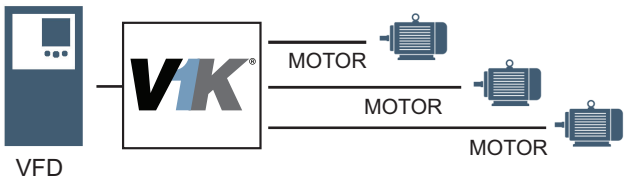

Please see web site for configuration guidelines.

Performance Guarantee *- Properly sized and applied, TCI guarantees that the V1K will limit motor terminal peak input voltage to 150% of the bus voltage with a wire lead length of 1,000 feet and a carrier frequency of 4 kHz. Maximum lead length and carrier frequency can vary depending on wire lead type. If a properly selected, installed and loaded V1K filter fails to meet the guaranteed performance levels, TCI will provide the necessary components or replacement filter at no additional charge. TCI does not take responsibility for additional installation or removal costs to include, but not limited to, replacement of third party equipment. Please see TCI's website for minimum requirements.*

TCI, LLC
W132 N10611 Grant Drive
Germantown, WI 53022
800-824-8282 | www.transcoil.com

Part #25383
Version 2.1
03/11/20

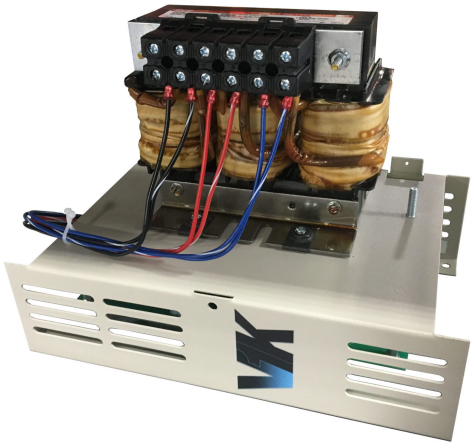

V1K80A00

V1K, 600V max, 80A, 3 Phase, Open, dV/dT Output Filter, UL Listed

PRODUCT INFORMATION

SKU: V1K80A00. Categories: Output, dv/dt output filter, V1K filter.

SPECIFICATIONS

Rated Voltage	480
Hertz (Hz)	60
Horsepower (HP)	60
Phase	3
Amps	80
Impedance Value	Low Z
UL	UL Listed
Enclosure Type	Open
Watts Loss	255
Country of Origin	US
Dimensions	Height: 12 in Width: 8 in Depth: 9 in
Weight	23 lbs

Contact TCI for more information or to place an order:
800-824-8282 | sales@transcoil.com | transcoil.com
W132 N10611 Grant Drive, Germantown, WI 53022

See V1K Installation Guide For
Terminal Wire Size And Torque Information.

Note: Maintain Clearance of 3 Inches On All Sides To Other Equipment.

V1K Part Number	Max Voltage	Amps	Phase	Weight (LBS)
V1K80A00	600	80	3	23
V1K80A00EX	600	80	3	23

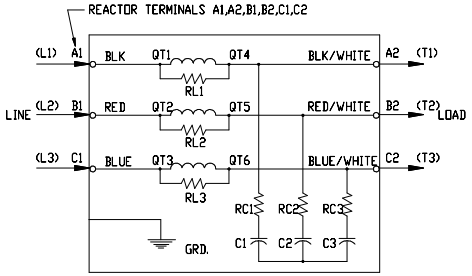

REACTOR AND BOARD ASSEMBLY CONNECTIONS

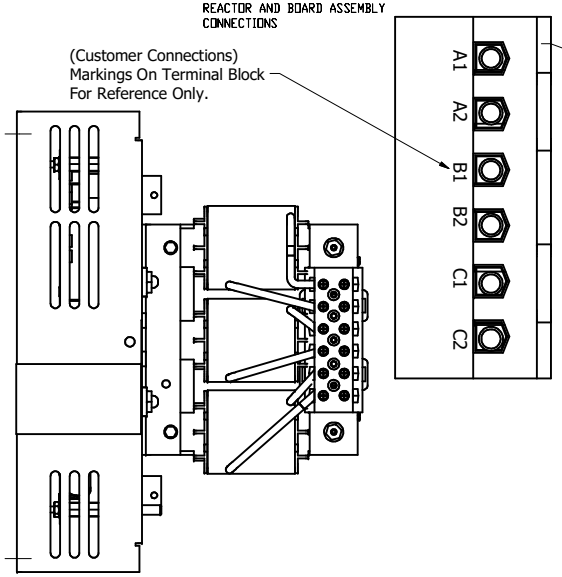

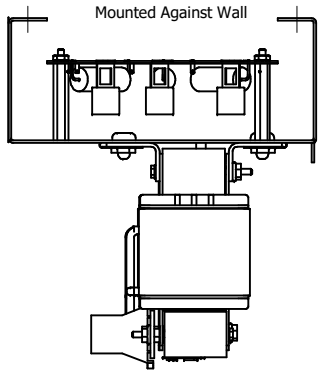

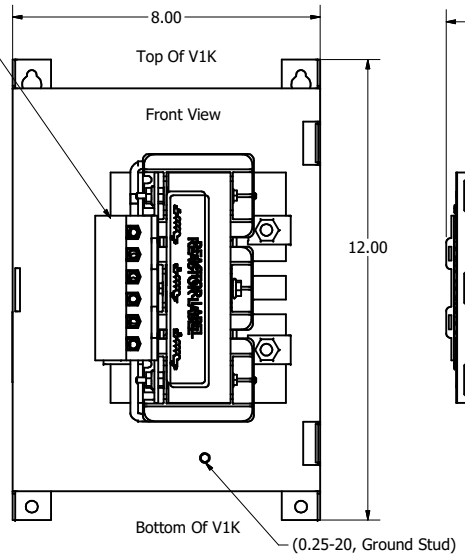

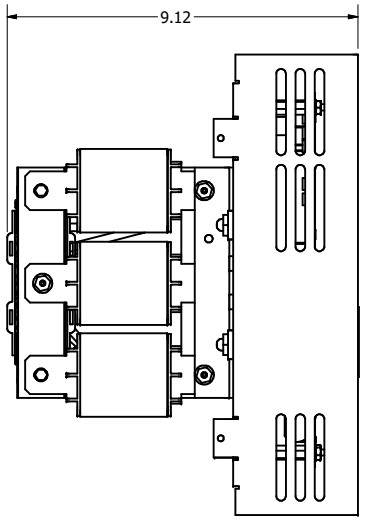

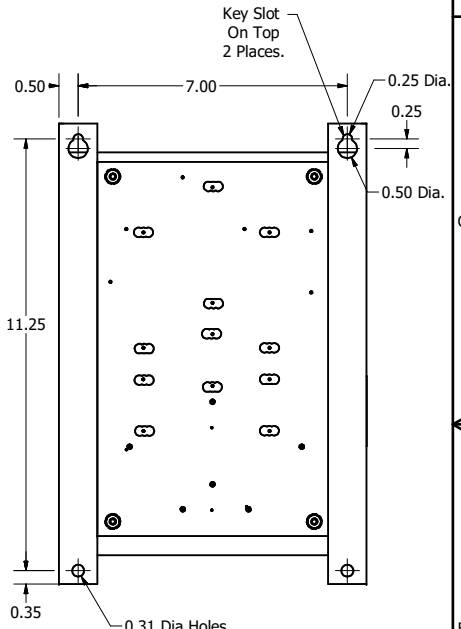

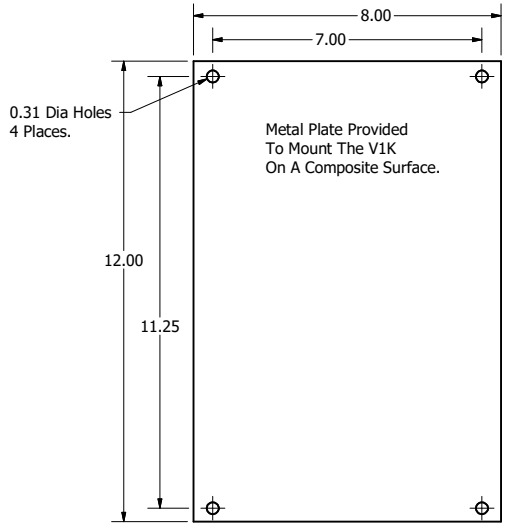

Customer Is Responsible For Installation to
Meet All National And Local Electrical Codes.

Material(s) Shall be RoHS Compliant

TCI, LLC CLAIMS PROPRIETARY RIGHTS IN THE MATERIAL HEREIN DISCLOSED. IT IS SUPPLIED WITHOUT PREDJUDICE TO ANY PATENT RIGHTS OF TCI AND MAY NOT BE REPRODUCED OR USED TO MANUFACTURE ANYTHING SHOWN THEREIN WITHOUT WRITTEN PERMISSION FROM TCI.

NO	REVISION	DATE	BY
H	4658 Rated To Max Voltage	03/04/19	JRN
G	4030, Combine V1k Drawings	6/7/17	DSW

TOLERANCES (EXCEPT AS NOTED)
DECIMAL
.XX ± .25
.XXX ± .10
FRACTIONAL
± 1/16
ANGULAR
± 1°

TCI
W132 N10611 Grant Drive
Germantown, WI 53022

V1K, Open
80 Amps

DRN. BY: DSW
DATE: 4/26/17
SCALE: TO FIT
APRVD:
SIZE: C
102400DG
SHT 1 OF 1

PART NUMBER	RATED VOLTS	NEC HP 480V	NEC HP 600V	NEC HP 240V	RATED CURRENT	HEIGHT	WIDTH	DEPTH	TERM TYPE	TERM TORQUE	TORQUE UM	WATTS LOSS	WEIGHT
V1K2A00	600	0.75	1	-	2	9	5.5	7.25	TB	10	LB-IN	75	8
V1K3A00	600	1 - 1.5	2	0.5	3	9	5.5	7.25	TB	10	LB-IN	75	8
V1K4A00	600	2	3	0.75	4	9	5.5	7.25	TB	10	LB-IN	75	8
V1K6A00	600	-	-	1 - 1.5	6	9	5.5	7.25	TB	10	LB-IN	80	8
V1K8A00	600	5	5	2	8	9	5.5	8.25	TB	10	LB-IN	90	8
V1K12A00	600	7.5	10	3	12	9	5.5	8.25	TB	10	LB-IN	95	8
V1K16A00	600	10	-	5	16	9	5.5	8.25	TB	20	LB-IN	95	12
V1K18A00	600	10	15	-	18	9	5.5	8.25	TB	20	LB-IN	110	12
V1K21A00	600	15	-	-	21	9	5.5	8.25	TB	20	LB-IN	110	12
V1K25A00	600	15	20	7.5	25	9	5.5	8.25	TB	20	LB-IN	110	12
V1K27A00	600	20	25	-	27	9	5.5	8.25	TB	20	LB-IN	110	14
V1K35A00	600	25	30	10	35	12	8	9	TB	30	LB-IN	130	17
V1K45A00	600	30	40	15	45	12	8	9	TB	30	LB-IN	135	17
V1K55A00	600	40	50	20	55	12	8	9	TB	35	LB-IN	145	23
V1K80A00	600	50 - 60	75	25 - 30	80	12	8	9	TB	35	LB-IN	255	23
V1K110A00	600	75	100	40	110	12	8	10.25	PT	50	LB-IN	245	40
V1K130A00	600	100	125	50	130	8.5	11.75	9.5	PT	50	LB-IN	270	55
V1K160A00	600	125	150	60	160	8.5	11.75	10.5	PT	375	LB-IN	260	60
V1K200A00	600	150	200	75	200	8.5	11.75	9.25	PT	50	LB-IN	265	60
V1K250A00	600	200	250	100	250	8.5	11.75	9.25	PT	50	LB-IN	290	65
V1K305A00	600	250	300	-	305	8.75	11.75	12.25	PT	500	LB-IN	325	80
V1K362A00	600	300	350	150	362	8.75	11.75	12	PT	375	LB-IN	300	80
V1K420A00	600	350	450	-	420	10	11.75	13.75	PT	500	LB-IN	450	95
V1K480A00	600	400	500	200	480	10	11.75	13.75	PT	500	LB-IN	475	100
V1K600A00	600	500	600	-	600	12.75	15	13.75	PT	500	LB-IN	515	130
V1K750A00	600	600	700	-	750	12.75	15	14.5	PT	500	LB-IN	770	135

(13)

TERMINAL BLOCKS and ACCESSORIES

Specification Section 13430-2.5

PHOENIX CONTACT

TERMINAL BLOCK
3031364

FUSED TERMINAL BLOCK
3036385

ANALOG TERMINAL BLOCK W/GROUND
2717139

DOUBLE-LEVEL BLOCK
3031429

EDISON

POWER DISTRIBUTION TERMINAL BLOCK
HPB106-3

COVER FOR HPB106 T.B.
PBC-33

POWER TERMINAL BLOCK FOR PUMP LOAD CONNECTION
HPB104-3

POWER TERMINAL BLOCK FOR PUMP GROUND CONNECTION
HPB101-1

COVER FOR HPB101 and HPB104 T.B.
PBC-21

ST 4

Order No.: 3031364

Extract from the online catalog



http://eshop.phoenixcontact.de/phoenix/treeViewClick.do?UID=3031364

Feed-through modular terminal block, Connection method: Spring-cage connection, Cross section: 0.08 mm² - 6 mm², AWG 28 - 10, Width: 6.2 mm, Color: gray, Mounting type: NS 35/7.5, NS 35/15

Commercial data	
GTIN (EAN)	4 017918 186838
sales group	A600
Pack	50 pcs.
Customs tariff	85369010
Catalog page information	Page 145 (CL1-2011)

Product notes

WEEE/RoHS-compliant since: 01/01/2003

http://www.download.phoenixcontact.com
Please note that the data given here has been taken from the online catalog. For comprehensive information and data, please refer to the user documentation. The General Terms and Conditions of Use apply to Internet downloads.

Technical data

General

Number of levels	1
Number of connections	2
Color	gray
Insulating material	PA

Inflammability class acc. to UL 94	V0

Dimensions

Width	6.2 mm
Length	56 mm
Height NS 35/7.5	36.5 mm
Height NS 35/15	44 mm

Technical data

Maximum load current	40 A (with 6 mm^2 conductor cross section)
Rated surge voltage	8 kV
Pollution degree	3
Surge voltage category	III
Insulating material group	I
Connection in acc. with standard	IEC 60947-7-1
Nominal current I_N	32 A
Nominal voltage U_N	800 V
Open side panel	ja

Connection data

Conductor cross section solid min.	0.08 mm²
Conductor cross section solid max.	6 mm²
Conductor cross section stranded min.	0.08 mm²
Conductor cross section stranded max.	4 mm²
Conductor cross section AWG/kcmil min.	28
Conductor cross section AWG/kcmil max	10
Conductor cross section stranded, with ferrule without plastic sleeve min.	0.14 mm²
Conductor cross section stranded, with ferrule without plastic sleeve max.	4 mm²
Conductor cross section stranded, with ferrule with plastic sleeve min.	0.14 mm²
Conductor cross section stranded, with ferrule with plastic sleeve max.	4 mm²
2 conductors with same cross section, stranded, TWIN ferrules with plastic sleeve, min.	0.5 mm²
2 conductors with same cross section, stranded, TWIN ferrules with plastic sleeve, max.	1 mm²
Connection method	Spring-cage connection

Stripping length	10 mm
Internal cylindrical gage	A4

Certificates / Approvals

Certification	ABS, BV, CB, CSA, CUL, DNV, GL, GOST, KR, LR, NK, UL, VDE-PZI
Certification Ex:	IECEx, KEMA-EX

Accessories

Item	Designation	Description
Assembly		
3030721	ATP-ST 4	Partition plate, Length: 61 mm, Width: 2 mm, Height: 42 mm, Color: gray
3022218	CLIPFIX 35	Snap-on end bracket, for 35 mm NS 35/7.5 or NS 35/15 DIN rail, can be fitted with Zack strip ZB 8 and ZB 8/27, terminal strip marker KLM 2 and KLM, width: 9.5 mm, color: gray
3022276	CLIPFIX 35-5	Snap-on end bracket, for NS 35/7.5 or NS 35/15 DIN rail, can be fitted with Zack strip ZB 5 and ZBF 5, terminal strip marker KLM 2 and KLM, parking facility for FBS...5, FBS...6, KSS 5, KSS 6, width: 5,15 mm, color: gray
3030420	D-ST 4	End cover, Length: 56 mm, Width: 2.2 mm, Height: 36.5 mm, Color: gray
3036738	DP PS-6	Spacer plate, Color: red
1201442	E/UK	End clamp, for assembly on NS 32 or NS 35/7.5 DIN rail
0801762	NS 35/ 7,5 CU UNPERF 2000MM	DIN rail, material: Copper, unperforated, height 7.5 mm, width 35 mm, length: 2 m
0801733	NS 35/ 7,5 PERF 2000MM	DIN rail, material: steel galvanized and passivated with a thick layer, perforated, height 7.5 mm, width 35 mm, length: 2000 mm
0801681	NS 35/ 7,5 UNPERF 2000MM	DIN rail, material: Steel, unperforated, height 7.5 mm, width 35 mm, length: 2 m
1201756	NS 35/15 AL UNPERF 2000MM	DIN rail, deep drawn, high profile, unperforated, 1.5 mm thick, material: aluminum, height 15 mm, width 35 mm, length 2000 mm
1201895	NS 35/15 CU UNPERF 2000MM	DIN rail, material: Copper, unperforated, 1.5 mm thick, height 15 mm, width 35 mm, length: 2 m

STTB 4

Order No.: 3031429

Extract from the online catalog



http://eshop.phoenixcontact.de/phoenix/treeViewClick.do?UID=3031429

Double-level spring-cage terminal block, Cross section: 0.08 mm² - 6 mm², AWG: 28 - 10, Connection type: Spring-cage connection, Width: 6.2 mm, Color: gray, Mounting type: NS 35/7.5, NS 35/15

Product notes

WEEE/RoHS-compliant since: 01/01/2003

http://www.download.phoenixcontact.com
Please note that the data given here has been taken from the online catalog. For comprehensive information and data, please refer to the user documentation. The General Terms and Conditions of Use apply to Internet downloads.

Commercial data	
GTIN (EAN)	4 017918 186920
sales group	A632
Pack	50 pcs.
Customs tariff	85369010
Catalog page information	Page 167 (CL1-2011)

Technical data

General

Number of levels	2
Number of connections	4
Color	gray

Insulating material	PA
Inflammability class acc. to UL 94	V0

Dimensions

Width	6.2 mm
Length	83.5 mm
Height NS 35/7.5	47.5 mm
Height NS 35/15	55 mm

Technical data

Rated surge voltage	6 kV
Pollution degree	3
Surge voltage category	III
Insulating material group	I
Connection in acc. with standard	IEC 60947-7-1
Nominal current I_N	30 A (with 4 mm² conductor cross section)
Nominal voltage U_N	500 V

Connection data

Conductor cross section solid min.	0.08 mm²
Conductor cross section solid max.	6 mm²
Conductor cross section stranded min.	0.08 mm²
Conductor cross section stranded max.	4 mm²
Conductor cross section AWG/kcmil min.	28
Conductor cross section AWG/kcmil max	10
Conductor cross section stranded, with ferrule without plastic sleeve min.	0.14 mm²
Conductor cross section stranded, with ferrule without plastic sleeve max.	4 mm²
Conductor cross section stranded, with ferrule with plastic sleeve min.	0.14 mm²
Conductor cross section stranded, with ferrule with plastic sleeve max.	4 mm²
2 conductors with same cross section, stranded, TWIN ferrules with plastic sleeve, min.	0.5 mm²
2 conductors with same cross section, stranded, TWIN ferrules with plastic sleeve, max.	1 mm²
Connection method	Spring-cage connection
Stripping length	10 mm

Internal cylindrical gage	A4

Certificates / Approvals

Certification	ABS, BV, CB, CSA, CUL, DNV, GL, GOST, KR, LR, NK, UL, VDE-PZI
Certification Ex:	IECEx, KEMA-EX

Accessories

Item	Designation	Description
Assembly		
3030747	ATP-STTB 4	Partition plate, Length: 88.7 mm, Width: 2 mm, Height: 53 mm, Color: gray
3022218	CLIPFIX 35	Snap-on end bracket, for 35 mm NS 35/7.5 or NS 35/15 DIN rail, can be fitted with Zack strip ZB 8 and ZB 8/27, terminal strip marker KLM 2 and KLM, width: 9.5 mm, color: gray
3030462	D-STTB 4	End cover, Length: 83.5 mm, Width: 2.2 mm, Height: 47.5 mm, Color: gray
1201442	E/UK	End clamp, for assembly on NS 32 or NS 35/7.5 DIN rail
0801762	NS 35/ 7,5 CU UNPERF 2000MM	DIN rail, material: Copper, unperforated, height 7.5 mm, width 35 mm, length: 2 m
0801733	NS 35/ 7,5 PERF 2000MM	DIN rail, material: steel galvanized and passivated with a thick layer, perforated, height 7.5 mm, width 35 mm, length: 2000 mm
0801681	NS 35/ 7,5 UNPERF 2000MM	DIN rail, material: Steel, unperforated, height 7.5 mm, width 35 mm, length: 2 m
1201756	NS 35/15 AL UNPERF 2000MM	DIN rail, deep drawn, high profile, unperforated, 1.5 mm thick, material: aluminum, height 15 mm, width 35 mm, length 2000 mm
1201895	NS 35/15 CU UNPERF 2000MM	DIN rail, material: Copper, unperforated, 1.5 mm thick, height 15 mm, width 35 mm, length: 2 m
1201730	NS 35/15 PERF 2000MM	DIN rail, material: steel galvanized and passivated with a thick layer, perforated, height 15 mm, width 35 mm, length: 2000 mm
1201714	NS 35/15 UNPERF 2000MM	DIN rail, material: Steel, unperforated, height 15 mm, width 35 mm, length: 2 m
1201798	NS 35/15-2,3 UNPERF 2000MM	DIN rail, material: Steel, unperforated, 2.3 mm thick, height 15 mm, width 35 mm, length: 2 m

Bridges

3030336	FBS 2-6	Plug-in bridge, Number of positions: 2, Color: red
3030242	FBS 3-6	Plug-in bridge, Number of positions: 3, Color: red
3030255	FBS 4-6	Plug-in bridge, Number of positions: 4, Color: red
3030349	FBS 5-6	Plug-in bridge, Number of positions: 5, Color: red
3030271	FBS 10-6	Plug-in bridge, Number of positions: 10, Color: red
3030365	FBS 20-6	Plug-in bridge, Number of positions: 20, Color: red
3032224	FBS 50-6	Plug-in bridge, Number of positions: 50, Color: red

Marking

0800967	STP 5-2	Double marker carrier, snaps onto the double-level spring-cage terminal block STTB 2.5 and STTB 4, labeled with ZB 5 or ZBF 5
3030954	WST 4	Warning cover, 5-pos., for terminal width: 6.2 mm
0803618	ZBFM 6/WH:UNBEDRUCKT	Zack marker sheet, flat, unprinted: 100-section, 10 strips à 10 markers, sufficient for 100 terminal blocks, for all terminal blocks, pitch 6.2 mm, labeling with M-PEN or CMS system, color: white

Plug/Adapter

3002885	ISH 4/0,5	Insulating sleeve, Color: gray
3002898	ISH 4/1,0	Insulating sleeve, Color: black
3030925	PAI-4	Test adapter, Color: gray
3030996	PS-6	Test adapter, Color: red

Tools

1204517	SZF 1-0,6X3,5	Actuation tool, for ST terminal blocks, also suitable for use as a bladed screwdriver, size: 0.6 x 3.5 x 100 mm, 2-component grip, with non-slip grip

Diagrams/Drawings

Circuit diagram

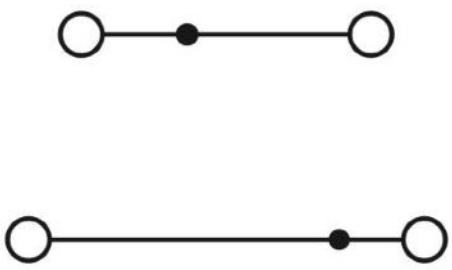

Address

PHOENIX CONTACT Inc., USA
586 Fulling Mill Road
Middletown, PA 17057,USA
Phone (800) 888-7388
Fax (717) 944-1625
http://www.phoenixcon.com

© 2011 Phoenix Contact
Technical modifications reserved;

Spring cage ground terminal block - ST 4-PE - 3031380

Please be informed that the data shown in this PDF Document is generated from our Online Catalog. Please find the complete data in the user's documentation. Our General Terms of Use for Downloads are valid (http://phoenixcontact.com/download)



Spring cage ground terminal block, connection method: Spring-cage connection, number of connections: 2, cross section:0.08 mm² - 6 mm², AWG: 28 - 10, width: 6.2 mm, color: green-yellow, mounting type: NS 35/7,5, NS 35/15

Key Commercial Data

Packing unit	1 STK
GTIN	4 017918 186852
GTIN	4017918186852
Weight per Piece (excluding packing)	12.800 g
Custom tariff number	85369010
Country of origin	Germany

Technical data

General

Number of levels	1
Number of connections	2
Potentials	1
Nominal cross section	4 mm²
Color	green-yellow
Insulating material	PA
Flammability rating according to UL 94	V0
Area of application	Railway industry
	Machine building
	Plant engineering

Spring cage ground terminal block - ST 4-PE - 3031380

Technical data

General

	Process industry
Rated surge voltage	8 kV
Degree of pollution	3
Overvoltage category	III
Insulating material group	I
Open side panel	Yes
Shock protection test specification	DIN EN 50274 (VDE 0660-514):2002-11
Back of the hand protection	guaranteed
Finger protection	guaranteed
Oscillation, broadband noise test result	Test passed
Test specification, oscillation, broadband noise	DIN EN 50155 (VDE 0115-200):2008-03
Test spectrum	Service life test category 2, bogie-mounted
Test frequency	f_1 = 5 Hz to f_2 = 250 Hz
ASD level	6.12 $(m/s^2)^2$/Hz
Acceleration	3.12 g
Test duration per axis	5 h
Test directions	X-, Y- and Z-axis
Shock test result	Test passed
Test specification, shock test	DIN EN 50155 (VDE 0115-200):2008-03
Shock form	Half-sine
Acceleration	30g
Shock duration	18 ms
Number of shocks per direction	3
Test directions	X-, Y- and Z-axis (pos. and neg.)
Relative insulation material temperature index (Elec., UL 746 B)	130 °C
Temperature index of insulation material (DIN EN 60216-1 (VDE 0304-21))	125 °C
Static insulating material application in cold	-60 °C
Behavior in fire for rail vehicles (DIN 5510-2)	Test passed
Flame test method (DIN EN 60695-11-10)	V0
Oxygen index (DIN EN ISO 4589-2)	>32 %
NF F16-101, NF F10-102 Class I	2
NF F16-101, NF F10-102 Class F	2
Surface flammability NFPA 130 (ASTM E 162)	passed
Specific optical density of smoke NFPA 130 (ASTM E 662)	passed
Smoke gas toxicity NFPA 130 (SMP 800C)	passed
Calorimetric heat release NFPA 130 (ASTM E 1354)	27,5 MJ/kg
Fire protection for rail vehicles (DIN EN 45545-2) R22	HL 1 - HL 3

Spring cage ground terminal block - ST 4-PE - 3031380

Technical data

General

Fire protection for rail vehicles (DIN EN 45545-2) R23	HL 1 - HL 3
Fire protection for rail vehicles (DIN EN 45545-2) R24	HL 1 - HL 3
Fire protection for rail vehicles (DIN EN 45545-2) R26	HL 1 - HL 3

Dimensions

Width	6.2 mm
End cover width	2.2 mm
Length	56 mm
Height NS 35/7,5	36.5 mm
Height NS 35/15	44 mm

Connection data

Note	Please observe the current carrying capacity of the DIN rails.
Connection method	Spring-cage connection
Connection in acc. with standard	IEC 60947-7-2
Conductor cross section solid min.	0.08 mm²
Conductor cross section solid max.	6 mm²
Conductor cross section AWG min.	28
Conductor cross section AWG max.	10
Conductor cross section flexible min.	0.08 mm²
Conductor cross section flexible max.	4 mm²
Min. AWG conductor cross section, flexible	28
Max. AWG conductor cross section, flexible	12
Conductor cross section flexible, with ferrule without plastic sleeve min.	0.14 mm²
Conductor cross section flexible, with ferrule without plastic sleeve max.	4 mm²
Conductor cross section flexible, with ferrule with plastic sleeve min.	0.14 mm²
Conductor cross section flexible, with ferrule with plastic sleeve max.	4 mm²
2 conductors with same cross section, stranded, TWIN ferrules with plastic sleeve, min.	0.5 mm²
2 conductors with same cross section, stranded, TWIN ferrules with plastic sleeve, max.	1 mm²
Connection in acc. with standard	IEC/EN 60079-7
Conductor cross section solid min.	0.08 mm²
Conductor cross section solid max.	6 mm²
Conductor cross section AWG min.	28
Conductor cross section AWG max.	10
Conductor cross section flexible min.	0.08 mm²
Conductor cross section flexible max.	4 mm²
Stripping length	8 mm ... 10 mm

Spring cage ground terminal block - ST 4-PE - 3031380

Technical data

Connection data

Internal cylindrical gage	A4

Standards and Regulations

Connection in acc. with standard	CSA
	IEC 60947-7-2
Flammability rating according to UL 94	V0

Environmental Product Compliance

China RoHS	Environmentally friendly use period: unlimited = EFUP-e
	No hazardous substances above threshold values

Classifications

eCl@ss

eCl@ss 4.0	27141118
eCl@ss 4.1	27141118
eCl@ss 5.0	27141118
eCl@ss 5.1	27141118
eCl@ss 6.0	27141141
eCl@ss 7.0	27141141
eCl@ss 8.0	27141141
eCl@ss 9.0	27141141

ETIM

ETIM 2.0	EC000901
ETIM 3.0	EC000901
ETIM 4.0	EC000901
ETIM 5.0	EC000901
ETIM 6.0	EC000901

UNSPSC

UNSPSC 6.01	30211811
UNSPSC 7.0901	39121410
UNSPSC 11	39121410
UNSPSC 12.01	39121410
UNSPSC 13.2	39121410

Approvals

Approvals

Spring cage ground terminal block - ST 4-PE - 3031380

Approvals

Approvals

CSA / UL Recognized / VDE Gutachten mit Fertigungsüberwachung / cUL Recognized / LR / BV / RS / KR / NK / EAC / EAC / DNV GL / DNV GL / cULus Recognized

Ex Approvals

IECEx / ATEX / EAC Ex

Approval details

CSA	http://www.csagroup.org/services/testing-and-certification/certified-product-listing/	13631

mm²/AWG/kcmil	28-10

UL Recognized	http://database.ul.com/cgi-bin/XYV/template/LISEXT/1FRAME/index.htm	FILE E 60425

mm²/AWG/kcmil	28-10

VDE Gutachten mit Fertigungsüberwachung	http://www.vde.com/en/Institute/OnlineService/VDE-approved-products/Pages/Online-Search.aspx	40010329

mm²/AWG/kcmil	0.2-4
Nominal current IN	32 A

cUL Recognized	http://database.ul.com/cgi-bin/XYV/template/LISEXT/1FRAME/index.htm	FILE E 60425

mm²/AWG/kcmil	28-10

LR	http://www.lr.org/en	04/20034

Spring cage ground terminal block - ST 4-PE - 3031380

Approvals

BV		http://www.veristar.com/portal/veristarinfo/generalinfo/approved/approvedProducts/equipmentAndMaterials	13403/B0 BV
RS		http://www.rs-head.spb.ru/en/index.php	11.04057.250
KR		http://www.krs.co.kr/eng/main/main.aspx	HMB17372-EL002
NK		http://www.classnk.or.jp/hp/en/	09 ME 140
EAC			EAC-Zulassung
EAC			7500651.22.01.00246
DNV GL		https://www.dnvgl.com/	E-13345 (E-9232)
DNV GL		http://exchange.dnv.com/tari/	TAE00001CS
cULus Recognized		http://database.ul.com/cgi-bin/XYV/template/LISEXT/1FRAME/index.htm	

Accessories

Accessories

DIN rail

DIN rail perforated - NS 35/ 7,5 PERF 2000MM - 0801733

DIN rail, material: steel galvanized and passivated with a thick layer, perforated, height 7.5 mm, width 35 mm, length: 2000 mm

Fuse modular terminal block - ST 4-HESI (6,3X32) - 3036385

Please be informed that the data shown in this PDF Document is generated from our Online Catalog. Please find the complete data in the user's documentation. Our General Terms of Use for Downloads are valid (http://phoenixcontact.com/download)



Lever-type fuse terminal block, black, for 6.3 x 32 mm G fuse inserts

Product Features

- An extremely compact design
- Test connection on both sides in safety lever

Key Commercial Data

Packing unit	1 pc
Weight per Piece (excluding packing)	26.63 g
Custom tariff number	85369085
Country of origin	Poland

Technical data

General

Number of levels	1
Number of connections	2
Nominal cross section	4 mm²
Color	black
Insulating material	PA
Flammability rating according to UL 94	V0
Fuse	G / 6,3 x 32
Fuse type	Glass / ceramics / ...
Rated surge voltage	6 kV
Degree of pollution	3
Overvoltage category	III
Insulating material group	I

Fuse modular terminal block - ST 4-HESI (6,3X32) - 3036385

Technical data

General

Maximum power dissipation	max. 1.6 W (With single arrangement of the fuse terminal block in the event of overload)
Maximum current with single arrangement	10 A
Connection in acc. with standard	IEC 60947-7-3
Maximum load current	10 A (the current is determined by the fuse used)
Nominal current I_N	10 A
Nominal voltage U_N	400 V
Open side panel	No
Shock protection test specification	DIN EN 50274 (VDE 0660-514):2002-11
Back of the hand protection	guaranteed
Finger protection	guaranteed
Oscillation, broadband noise test result	Test passed
Test specification, oscillation, broadband noise	DIN EN 50155 (VDE 0115-200):2008-03
Test spectrum	Service life test category 1, class B, body mounted
Test frequency	f_1 = 5 Hz to f_2 = 150 Hz
ASD level	0.964 $(m/s^2)^2/Hz$
Acceleration	0.58 g
Test duration per axis	5 h
Test directions	X-, Y- and Z-axis
Shock test result	Test passed
Test specification, shock test	DIN EN 50155 (VDE 0115-200):2008-03
Shock form	Half-sine
Acceleration	5 g
Shock duration	30 ms
Number of shocks per direction	3
Test directions	X-, Y- and Z-axis (pos. and neg.)
Relative insulation material temperature index (Elec., UL 746 B)	130 °C
Temperature index of insulation material (DIN EN 60216-1 (VDE 0304-21))	130 °C
Static insulating material application in cold	-60 °C

Dimensions

Width	8.2 mm
Length	76.5 mm
Height NS 35/7,5	69 mm
Height NS 35/15	76.5 mm

Connection data

Conductor cross section solid min.	0.08 mm²

Fuse modular terminal block - ST 4-HESI (6,3X32) - 3036385

Technical data

Connection data

Conductor cross section solid max.	6 mm²
Conductor cross section flexible min.	0.08 mm²
Conductor cross section flexible max.	4 mm²
Conductor cross section AWG min.	28
Conductor cross section AWG max.	10
Conductor cross section flexible, with ferrule without plastic sleeve min.	0.14 mm²
Conductor cross section flexible, with ferrule without plastic sleeve max.	4 mm²
Conductor cross section flexible, with ferrule with plastic sleeve min.	0.14 mm²
Conductor cross section flexible, with ferrule with plastic sleeve max.	4 mm²
2 conductors with same cross section, stranded, TWIN ferrules with plastic sleeve, min.	0.5 mm²
2 conductors with same cross section, stranded, TWIN ferrules with plastic sleeve, max.	1 mm²
Connection method	Spring-cage connection
Stripping length	8 mm ... 10 mm
Internal cylindrical gage	A4

Standards and Regulations

Connection in acc. with standard	CSA
	IEC 60947-7-3
Flammability rating according to UL 94	V0

Classifications

eCl@ss

eCl@ss 4.0	27141116
eCl@ss 4.1	27141116
eCl@ss 5.0	27141116
eCl@ss 5.1	27141116
eCl@ss 6.0	27141116
eCl@ss 7.0	27141116
eCl@ss 8.0	27141116

ETIM

ETIM 2.0	EC000897
ETIM 3.0	EC000899
ETIM 4.0	EC000899
ETIM 5.0	EC000899

Fuse modular terminal block - ST 4-HESI (6,3X32) - 3036385

Classifications

UNSPSC

UNSPSC 6.01	30211811
UNSPSC 7.0901	39121410
UNSPSC 11	39121410
UNSPSC 12.01	39121410
UNSPSC 13.2	39121410

Approvals

Approvals

Approvals

CSA / UL Recognized / KEMA-KEUR / cUL Recognized / GL / RS / IECEE CB Scheme / EAC / EAC / cULus Recognized

Ex Approvals

Approvals submitted

Approval details

CSA

	B	C
mm²/AWG/kcmil	28-10	28-10
Nominal current IN	10 A	10 A
Nominal voltage UN	300 V	300 V

UL Recognized

	B	C
mm²/AWG/kcmil	28-10	28-10
Nominal current IN	15 A	15 A
Nominal voltage UN	300 V	300 V

Fuse modular terminal block - ST 4-HESI (6,3X32) - 3036385

Approvals

KEMA-KEUR

mm²/AWG/kcmil	0.08-4
Nominal current IN	10 A
Nominal voltage UN	250 V

cUL Recognized

	B	C
mm²/AWG/kcmil	28-10	28-10
Nominal current IN	15 A	15 A
Nominal voltage UN	300 V	300 V

GL

RS

IECEE CB Scheme

mm²/AWG/kcmil	0.08-4
Nominal current IN	10 A
Nominal voltage UN	250 V

EAC

EAC

cULus Recognized

Drawings

Fuse modular terminal block - ST 4-HESI (6,3X32) - 3036385

Circuit diagram



Phoenix Contact 2016 © - all rights reserved
http://www.phoenixcontact.com

DOKD 1,5-TG

Order No.: 3011054

Extract from the online catalog



http://eshop.phoenixcontact.de/phoenix/treeViewClick.do?UID=3011054

Sensor/actuator terminal block, Cross section: 0.2 mm² - 4 mm², AWG: 24 - 12, Connection type: Screw connection, Width: 6.2 mm, Color: gray, Mounting type: NS 35/7.5, NS 35/15

Commercial data	
GTIN (EAN)	4 017918 091910
sales group	A221
Pack	50 pcs.
Customs tariff	85369010
Catalog page information	Page 433 (CL1-2011)

Product notes

WEEE/RoHS-compliant since: 01/01/2003

http://www.download.phoenixcontact.com
Please note that the data given here has been taken from the online catalog. For comprehensive information and data, please refer to the user documentation. The General Terms and Conditions of Use apply to Internet downloads.

Technical data

General

Number of levels	3
Number of connections	5
Color	gray

Insulating material	PA
Inflammability class acc. to UL 94	V2

Dimensions

Width	6.2 mm
Length	63 mm
Height NS 35/7.5	54.5 mm
Height NS 35/15	62 mm

Technical data

Rated surge voltage	4 kV
Pollution degree	3
Surge voltage category	III
Insulating material group	I
Connection in acc. with standard	IEC 60947-7-1 / IEC 60947-7-2
Nominal current I_N	24 A
Nominal voltage U_N	250 V (the voltage is determined by the component used)

Connection data

Conductor cross section solid min.	0.2 mm²
Conductor cross section solid max.	4 mm²
Conductor cross section stranded min.	0.2 mm²
Conductor cross section stranded max.	2.5 mm²
Conductor cross section AWG/kcmil min.	24
Conductor cross section AWG/kcmil max	12
Conductor cross section stranded, with ferrule without plastic sleeve min.	0.25 mm²
Conductor cross section stranded, with ferrule without plastic sleeve max.	2.5 mm²
Conductor cross section stranded, with ferrule with plastic sleeve min.	0.25 mm²
Conductor cross section stranded, with ferrule with plastic sleeve max.	2.5 mm²
2 conductors with same cross section, solid min.	0.2 mm²
2 conductors with same cross section, solid max.	1 mm²
2 conductors with same cross section, stranded min.	0.2 mm²
2 conductors with same cross section, stranded max.	1 mm²

2 conductors with same cross section, stranded, ferrules without plastic sleeve, min.	0.25 mm²
2 conductors with same cross section, stranded, ferrules without plastic sleeve, max.	1 mm²
2 conductors with same cross section, stranded, TWIN ferrules with plastic sleeve, min.	0.5 mm²
2 conductors with same cross section, stranded, TWIN ferrules with plastic sleeve, max.	1 mm²
Cross-section with insertion bridge, solid max.	4 mm²
Cross-section with insertion bridge, stranded max.	2.5 mm²
Connection method	Screw connection
Stripping length	8 mm
Internal cylindrical gage	A3
Screw thread	M3
Tightening torque, min	0.5 Nm
Tightening torque max	0.6 Nm

Certificates / Approvals

Certification CSA, CUL, GOST, UL

Accessories

Item	Designation	Description
Assembly		
1413285	ATP-DIKD 1,5	Partition plate, Length: 83 mm, Width: 2 mm, Height: 60 mm, Color: gray
3022218	CLIPFIX 35	Snap-on end bracket, for 35 mm NS 35/7.5 or NS 35/15 DIN rail, can be fitted with Zack strip ZB 8 and ZB 8/27, terminal strip marker KLM 2 and KLM, width: 9.5 mm, color: gray
1201413	E/UK 1	End clamps, for supporting the ends of double-level and three-level terminal blocks, width: 10 mm, color: gray
0801762	NS 35/ 7,5 CU UNPERF 2000MM	DIN rail, material: Copper, unperforated, height 7.5 mm, width 35 mm, length: 2 m
0801733	NS 35/ 7,5 PERF 2000MM	DIN rail, material: steel galvanized and passivated with a thick layer, perforated, height 7.5 mm, width 35 mm, length: 2000 mm

Edison Power Distribution Blocks



Short-Circuit Current Rated Power Distribution Blocks

We offer distinctly different styles of short-circuit current rated Power Distribution Blocks and Terminal Blocks to match different application needs.

1) Enclosed style or Open style
2) UL1953 Listed power distribution blocks or UL1059 Recognized terminal blocks, that have different minimum spacing requirements.

The table below can assist in the selection of the correct series for your application requirements.

Why are these important?

Assembly short-circuit current ratings (SCCRs) are now required in the 2005 NEC® and UL508A Listed industrial control panels.

Marking the SCCR on:

- Industrial Control Panels (NEC® 409.110)
- Industrial Machinery Electrical Panels (NEC® 670.3(A))
- HVAC equipment (NEC® 440.4(B)

The above sections are now required by the National Electrical Code. Power Distribution Blocks or Terminal Blocks not marked with an SCCR are typically one of the weakest links and may limit an assembly to no more than 10 kA SCCR per Table SB4.1 UL508A. The EPDB series and HPB series Power Distribution Blocks have increased spacing required where used in feeder circuits in equipment listed to UL508A. The PB series UL1059 Terminal Blocks must be evaluated for proper spacing. Also, for building wiring systems, the EPDB series and HPB series power distribution blocks can be used to meet the 2005 NEC® requirements in section 376.56(B) for power distribution blocks in wireways.

Edison Power Distribution Blocks Selection Guide*

Series	UL	† Enclosed	High SCCR**	Spacing*** 1" Air 2" Surface	Industrial Control Panels UL 508A Branch Circuit	Industrial Control Panels UL 508A Feeder Circuit	HVAC UL 1995	Wireways NEC® 376.56(B) (Requires UL 1953)
EPDB	UL 1953 Listed Power Distribution Blocks	Yes	Yes	Yes	Yes	Yes	Yes	Yes
HPB	UL 1953 Listed Power Distribution Blocks	No****	Yes	Yes	Yes	Yes	Yes	Yes (with optional cover)
PB	UL 1059 Recognized Terminal Blocks	No****	Yes	No*****	Yes	No*****	Yes	No

† IP-20 finger-safe under specific conditions.
**Refer to specific UL standards and NEC sections for a complete application guide.*
***When protected by proper fuse class with maximum ampere rating specified or smaller. This does not apply to PB40, PB51 and PB71 series.*
****See Minimum Space Requirements for Equipment table below.*
*****Optional covers are available. They are not IP-20 rated, but do provide additional protection against direct contact with Live Parts.*
******Exception: Yes, if single pole units installed with proper spacings.*

Minimum Space Requirements for Equipment

UL Standard	Spacing Between Live Parts of Opposite Polarity		Spacing Between Live Parts and Grounded Parts or Enclosures, Through Air and Over Surface @ 600V
	Through Air @ 600V	Over Surface @ 600V	
508A Feeder Circuits, Table 10.2	1"	2"	1"
508A Branch Circuits, Table 10.1	3/8"	1/2"	1/2"
UL 1995 HVAC	3/8"	1/2"	1/2"
Note: Refer to specific UL standards for complete spacing details.			

HPB Series Edison Open-Style Power Distribution Blocks

Open-style power distribution blocks for cable termination

Edison open-style power distribution blocks are a convenient way to manage your power distribution needs. They are engineered to maintain a high SCCR rating of 200kA with copper conductors making these distribution blocks the ideal solution to today's power circuit wiring needs.

Features

- Suitable for industrial control panel applications requiring high SCCR ratings
- Suitable for installation in wireways (with optional cover, per NEC 376.56 (B))
- Has minimum spacing requirements at 600VAC/DC of at least 1in (25.4 mm) through air and 2in (50.8 mm) over surface which meets UL 1953 requirements
- Used in UL508A panels
- Meets UL508A requirements and can be used in feeder and branch circuit applications
- Tin-plated aluminum connectors suitable for copper conductors
- Available safety covers for greater protection (purchase separately)
- Suitable for both factory and field wiring
- Panel mounting

Ratings

- Ampere ratings up to 310A
- 600VAC or VDC
- Short Circuit Current Rating (SCCR) up to 200kA with proper fusing See short circuit rating data table.
- Flammability: UL 94V0
- Temperature rating: -4°F to 248°F (-20°C to 120°C) with a relative humidity not exceeding 85%.

Agency Approvals

- UL Listed - File E333541 Guide QPQS
- CE

Standards

- UL1953

Open-Style Power Distribution Blocks Selection Table

Series	Part Number	Amps	Description	SCCR Rtg	Pcs/Pkg	Wt.	Price
HPB Series	HPB101-1	175 max	1 pole distribution block, 1 in/1 out	200kA	1	0.2 lb	$14.00
	HPB101-3	175 max	3 pole distribution block, 1 in/1 out	200kA	1	0.8 lb	$38.00
	HPB104-1	175 max	1 pole distribution block, 1 in/4 out	200kA	1	0.2 lb	$19.00
	HPB104-3	175 max	3 pole distribution block, 1 in/4 out	200kA	1	0.8 lb	$52.00
	HPB10S-1	175 max	1 pole distribution block, 1 in/stud out	200kA	1	0.6 lb	$18.00
	HPB10S-3	175 max	3 pole distribution block, 1 in/stud out	200kA	1	1.0 lb	$50.00
	HPB106-1	175 max	1 pole distribution block, 1 in/6 out	200kA	1	1.4 lb	$20.50
	HPB106-2	175 max	2 pole distribution block, 1 in/6 out	200kA	1	0.2 lb	$40.50
	HPB106-3	175 max	3 pole distribution block, 1 in/6 out	200kA	1	0.8 lb	$61.00
	HPB306-1	310 max	1 pole distribution block, 1 in/6 out	200kA	1	0.7 lb	$31.50
	HPB306-3	310 max	3 pole distribution block, 1 in/6 out	200kA	1	2.9 lb	$91.00
	HPB309-1	310 max	1 pole distribution block, 1 in/9 out	200kA	1	0.8 lb	$46.00
	HPB309-3	310 max	3 pole distribution block, 1 in/9 out	200kA	1	3.0 lb	$134.00
	HPB312-1	310 max	1 pole distribution block, 1 in/12 out	200kA	1	0.8 lb	$51.00
	HPB312-3	310 max	3 pole distribution block, 1 in/12 out	200kA	1	3.2 lb	$148.00



HPB104-1



HPB10S-3



HPB106-3



HPB309-1



HPB312-3

Open-Style Power Distribution Block General Specifications

Wire type	75°C* Copper
Voltage	600VAC or VDC maximum
Mounting	Surface mount

**Note: Amp rating based on NEC table 310.16 for 75°C copper wire.*

Optional Covers

Covers are ordered for each individual pole, i.e., three 1-pole covers for 3-pole block (see Table A) except HPB106 blocks have one cover for 1-, 2-, or 3-pole versions (see Table B). Shipped with mounting screws.

Table A

Block	Cover
HPB1XX-(pole)	PBC21
HPB3XX-(pole)	PBC31

Table B

Block	Cover
HPB106-1	PBC31
HPB106-2	PBC32
HPB106-3	PBC33

HPB Series Edison Open-Style Power Distribution Blocks

Edison Open-Style Power Distribution Blocks Wire and Torque Range Specifications								
Part Number	Line				Load			
	CU Wire Range	Torque Lb-in (Nm)	Trim Length in (mm)	Hex Key	CU Wire Range	Torque Lb-in (Nm)	Trim Length in (mm)	Hex Key
HPB101-1, HPB101-3	2/0 to 8 AWG 70 to 10 mm²	110 (12.4)	0.700 (17.8)	3/16"	2/0 to 8 AWG, 70 to 10 mm²	110 (12.4)	0.700 (17.8)	3/16" Hex
HPB104-1, HPB104-3	2/0 to 8 AWG 70 to 10 mm²	120 (13.6)	0.670 (17.0)	3/16"	4 to 6 AWG, 25 to 16 mm²	35 (4.0)	0.470 (11.9) top row, 0.780 (19.8) bottom row	Slot
					8 AWG, 10 mm²	25 (2.8)		
					10 to 14 AWG, 6 to 2.5 mm²	20 (2.3)		
HPB10S-1, HPB10S-3	2/0 to 8 AWG 70 to 10 mm²	120 (13.6)	0.670 (17.0)	3/16"	N/A	50 (5.7)	N/A	1/4-20 Stud
HPB106-1, HPB106-2, HBP106-3	2/0 to 8 AWG 70 to 10 mm²	120 (13.6)	0.700 (17.8)	3/16"	4 to 6 AWG, 25 to 16 mm²	35 (4.0)	0.480 (12.2) top row, 0.800 (20.3) bottom row	Slot
					8 AWG, 10 mm²	25 (2.8)		
					10 to 14 AWG, 6 to 2.5 mm²	20 (2.3)		
HPB306-1, HPB306-3	350 kcmil to 4 AWG 185 to 25 mm²	275 (31.1)	0.900 (22.9)	5/16"	4 to 6 AWG, 25 to 16 mm²	35 (4.0)	1.00 (25.4) top row, 0.450 (11.43) bottom row	Slot
					8 AWG, 10 mm²	25 (2.8)		
					10 to 12 AWG, 6 to 4 mm²	20 (2.3)		
HPB309-1, HPB309-3	350 kcmil to 4 AWG 185 to 25 mm²	275 (31.1)	0.900 (22.9)	5/16"	2 to 3 AWG, 35 mm²	50 (5.7)	0.450 (11.4) top row, 0.630 (16.0) middle row, 0.920 (23.4) bottom row	Slot top row. Slot middle row. 3/16" Hex bottom row
					4 to 6 AWG, 25 to 16 mm²	45 (5.1)		
					8 AWG, 10 mm²	40 (4.5)		
					10 to 12 AWG, 6 to 4 mm²	35 (4.0)		
HPB312-1, HPB312-3	350 kcmil to 4 AWG 185 to 25 mm²	275 (31.1)	0.900 (22.9)	5/16"	4 to 6 AWG, 25 to 16 mm²	35 (4.0)	0.450 (11.4) top row, 0.630 (16.0) middle row, 0.920 (23.4) bottom row	Slot
					8 AWG, 10 mm²	25 (2.8)		
					10 to 14 AWG, 6 to 2.5 mm²	20 (2.3)		

Short-Circuit Current Rating Data										
		Line		Load		Maximum Fuse Class and Amps**				
Part Number (All Single Pole)	Capacity*	Openings per Pole	Wire Range (copper only)	Openings per Pole	Wire Range (copper only)	Class J(JDL)	Class T (A3T/A6T)	Class RK1 (LENRK/LESRK)	Class RK5 (ECNR/ECSR)	SCCR Rating
HPB101-1, HPB101-3	175 A	1	2/0 to 8 AWG 70 to 10 mm²	1	2/0 to 8 AWG 70 to 10 mm²	200	200	200	60	200kA
HPB104-1, HPB104-3	175 A	1	2/0 to 8 AWG 70 to 10 mm²	4	4 to 12 AWG 25 to 4 mm²	200	200	200	60	200kA
					14 AWG 2.5 mm²	175	175	100	60	100kA
						200	200	100	60	50kA
HPB10S-1, HPB10S-3	175 A	1	2/0 to 8 AWG 70 to 10 mm²	Stud	1/4-20 x 3/4 Stud	200	200	100	60	200kA
HPB106-1, HPB106-2, HBP106-3	175 A	1	2/0 to 8 AWG 70 to 10 mm²	6	4 to 12 AWG 25 to 4 mm²	400	400	200	100	200kA
						400	400	400	100	100kA
					14 AWG 2.5 mm²	175	175	100	60	100kA
HPB306-1, HPB306-3	310 A	1	350 kcmil to 4 AWG 185 to 12 mm²	6	4 to 8 AWG 25 to 10 mm²	400	400	200	100	200kA
						400	400	400	100	100kA
					10 to 12 AWG 6 to 4 mm²	175	175	100	60	100kA
HPB309-1, HPB309-3	310 A	1	350 kcmil to 4 AWG 185 to 12 mm²	9	1/0 to 6 AWG 50 to 16 mm²	400	400	200	100	200kA
						400	400	400	100	100kA
					8 to 12 AWG 10 to 4 mm²	175	175	100	60	100kA
HPB312-1, HPB312-3	310 A	1	350 kcmil to 4 AWG 185 to 12 mm²	12	4 to 8 AWG 25 to 10 mm²	400	400	200	100	200kA
					10 to 14 AWG 6 to 2.5 mm²	175	175	100	60	100kA

Amp ratings are based on NEC® Table 310.16 for 75°C copper wire and UL508A Table 28.1.

***Class G 60A or less, or Class CC 30A or less fuses are suitable for all SCCRs in this table.*

HPB Series Edison Open-Style Power Distribution Block Dimensions

Edison Open-Style Power Distribution Blocks Dimensions (in[mm])						
Part Number	Width	Length	Height			
	A	B	C	D	E	F
HPB306-3, HPB312-3, HPB309-3	6.00 [152.4]	5.50 [139.7]	3.70 [93.9]	3.25 [82.6]	4.75 [120.7]	0.22 [5.7]
HPB306-1, HPB312-1, HPB309-1	1.96 [49.8]	3.38 [85.9]	3.32 [84.3]	-	3.38 [85.8]	0.21 [2.5] x 0.41 [10.4]
HPB101-3, HPB104-3, HPB10S-3	4.27 [108.3]	2.88 [73.2]	2.13 [54.0]	1.62 [41.1]	2.25 [57.2]	0.22 [5.7]
HPB101-1, HPB104-1, HPB10S-1	1.07 [27.2]	2.88 [73.2]	1.75 [44.5]	-	2.25 [57.2]	0.20 [5.1]
HPB106-1	1.96 [49.8]	4.00 [101.6]	3.32 [84.3]	-	3.37 [85.6]	0.21 [2.5] x 0.41 [10.4]
HPB106-2	3.58 [90.9]	4.00 [101.6]	3.32 [84.3]	1.62 [41.1]	3.37 [85.6]	0.21 [2.5] x 0.41 [10.4]
HPB106-3	5.20 [132.1]	4.00 [101.6]	3.32 [84.3]	1.62 [41.1]	3.37 [85.6]	0.21 [2.5] x 0.41 [10.4]

HPB101-1, HPB104-1, HPB10S-1

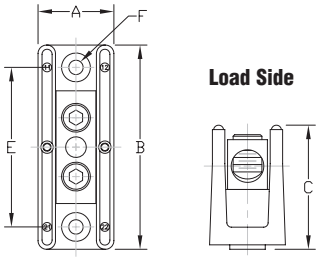

HPB101-3, HPB104-3, HPB10S-3

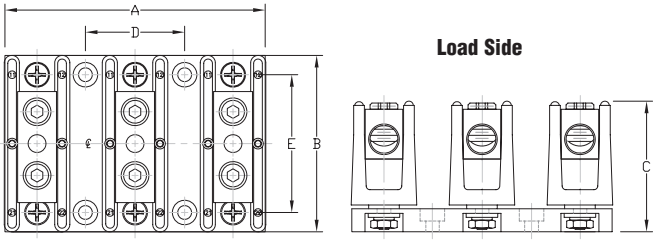

HPB106-1, HPB106-2, HPB106-3

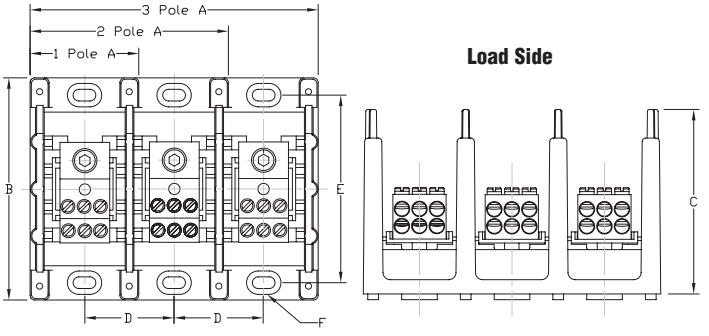

HPB306-1, HPB312-1, HPB309-1

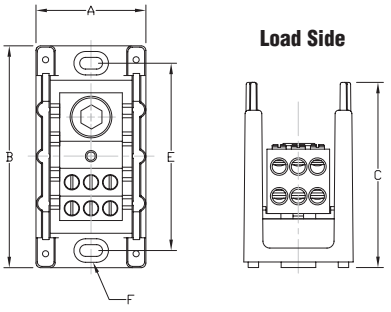

HPB306-3, HPB312-3, HPB309-3

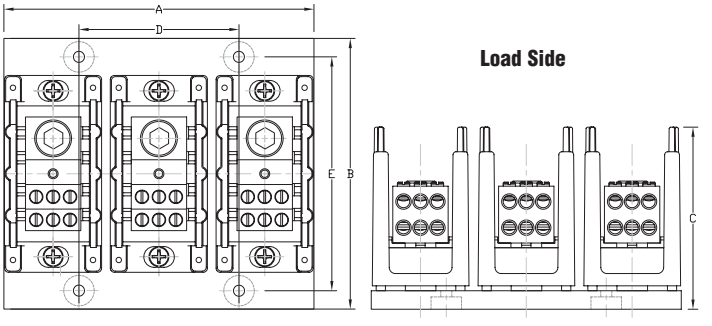

HPB Series Edison Open-Style Power Distribution Blocks Optional Covers

Covers

Optional Cover for HPB101-1, HPB101-3, HPB104-1, HPB104-3 HPB10S-1, HPB10S-3,

Note: One PBC21 will be required for each pole. For example the HPB101-1 will require 1 Qty. HPB101-3 will require 3 Qty.

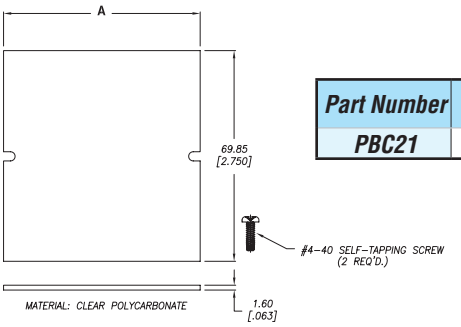

Part Number	A Dimension in[mm]
PBC21	0.94 [23.88]

Optional Cover for HPB306-1, HPB306-3, HPB309-1, HPB309-3, HPB312-1, HPB312-3

Note: One PBC31 will be required for each pole. For example the HPB306-1 will require 1 Qty. HPB306-3 will require 3 Qty.

Optional Cover for HPB106-1 = PBC31 HPB106-2 = PBC32 HPB106-3 = PBC33

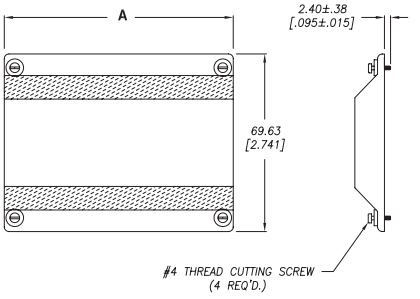

Part Number	A Dimension in[mm]
PBC31	2.10 [53.34]
PBC32	3.72 [94.49]
PBC33	5.34 [135.64]

Note: Dimensions are in inches [millimeters]

Part Number	Minimum Enclosure Size*
HPB101-1, HPB101-3	16" x 16" x 6.75" [406.4 mm x 406.4 mm x 171.5 mm]
HPB104-1, HPB104-3	16" x 16" x 6.75" [406.4 mm x 406.4 mm x 171.5 mm]
HPB10S-1, HPB10S-3	16" x 16" x 6.75" [406.4 mm x 406.4 mm x 171.5 mm]
HPB106-1, HPB106-2, HPB106-3	24" x 20" x 6.76" [609.6 mm x 508mm x 171.5 mm]
HPB306-1, HPB306-3	24" x 20" x 6.76" [609.6 mm x 508mm x 171.5 mm]
HPB309-1, HPB309-3	24" x 20" x 6.76" [609.6 mm x 508mm x 171.5 mm]
HPB312-1, HPB312-3	24" x 20" x 6.76" [609.6 mm x 508mm x 171.5 mm]

***Power distribution blocks SCCR determined based on testing in minimum size enclosure.**

Edison Open-Style Power Distribution Blocks Quick Reference

Edison Power Distribution Blocks Quick Reference						
Openings per pole	***Type***	***175 amps***	***310 amps***	***380 amps***	***570 amps***	***760 amps***
1 in 1 out	Open UL1059	**PB101x**	NO	NO	NO	NO
	Open UL1953 Listed	**HPB101-x**	***HPB101-x***	NO	NO	NO
	Finger Safe UL1953 Listed	**EPDB101**	***EPDB301***	NO	NO	NO
1 in 1 stud out	Open UL1059	NO	NO	***PB401x***	NO	NO
	Open UL1953 Listed	**HPB10S-x**	NO	NO	NO	NO
	Finger Safe UL1953 Listed	NO	NO	NO	NO	NO
2 in 2 out	Open UL1059	NO	NO	NO	NO	NO
	Open UL1953 Listed	NO	NO	NO	NO	NO
	Finger Safe UL1953 Listed	NO	NO	NO	NO	***EPDB702***
1 in 4 out	Open UL1059	***PB104x***	NO	NO	NO	NO
	Open UL1953 Listed	***HPB104-x***	***HPB104-x***	NO	NO	NO
	Finger Safe UL1953 Listed	***EPDB104***	NO	NO	NO	NO
1 in 6 out	Open UL1059	NO	***PB306x***	NO	NO	NO
	Open UL1953 Listed	***HPB106-x***	***HPB306-x***	NO	NO	NO
	Finger Safe UL1953 Listed	NO	NO	***EPDB306***	NO	NO
1 in 9 out	Open UL1059	NO	NO	NO	NO	NO
	Open UL1953 Listed	NO	***HPB309-x***	NO	NO	NO
	Finger Safe UL1953 Listed	NO	NO	NO	NO	NO
1 in 12 out	Open UL1059	NO	***PB312x***	NO	NO	NO
	Open UL1953 Listed	NO	***HPB312-x***	NO	NO	NO
	Finger Safe UL1953 Listed	NO	NO	NO	NO	NO
2 in 12 out	Open UL1059	NO	NO	NO	***PB512x***	***PB712x***
	Open UL1953 Listed	NO	NO	NO	NO	NO
	Finger Safe UL1953 Listed	NO	NO	NO	***EPDB512***	NO



CONTROL PANEL DRAWINGS

Specification Sections 13410 1.2.A.4 And 13430 1.3

EAGLE CONTROL DRAWINGS

D1026-01 thru D1026-38

23 OLD DOCK ROAD YAPHANK, NY 11980 TEL: (631) 924-1315 FAX: (631) 924-1012

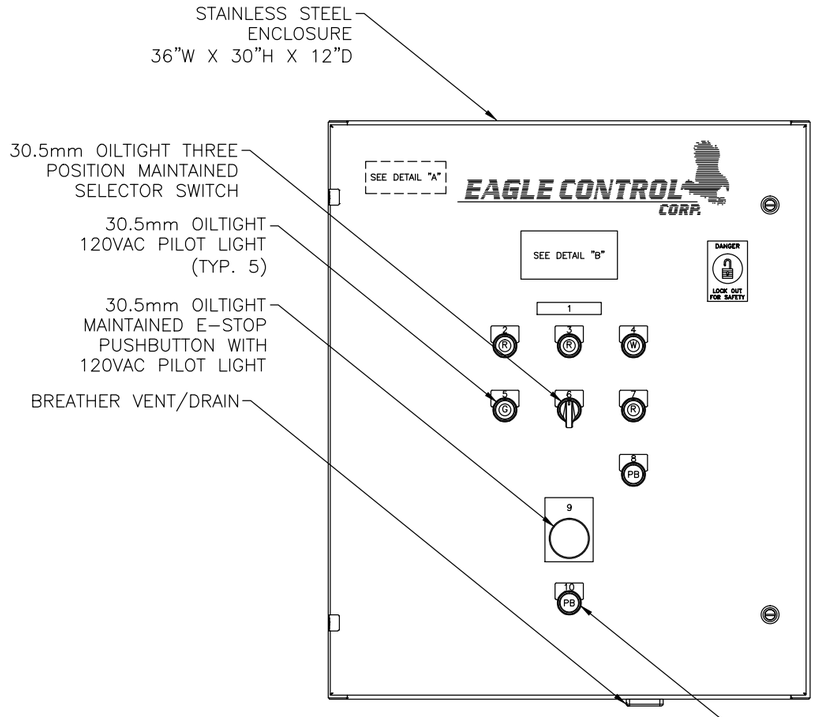

FRONT PANEL ARRANGEMENT

SCALE 3/16" = 1"

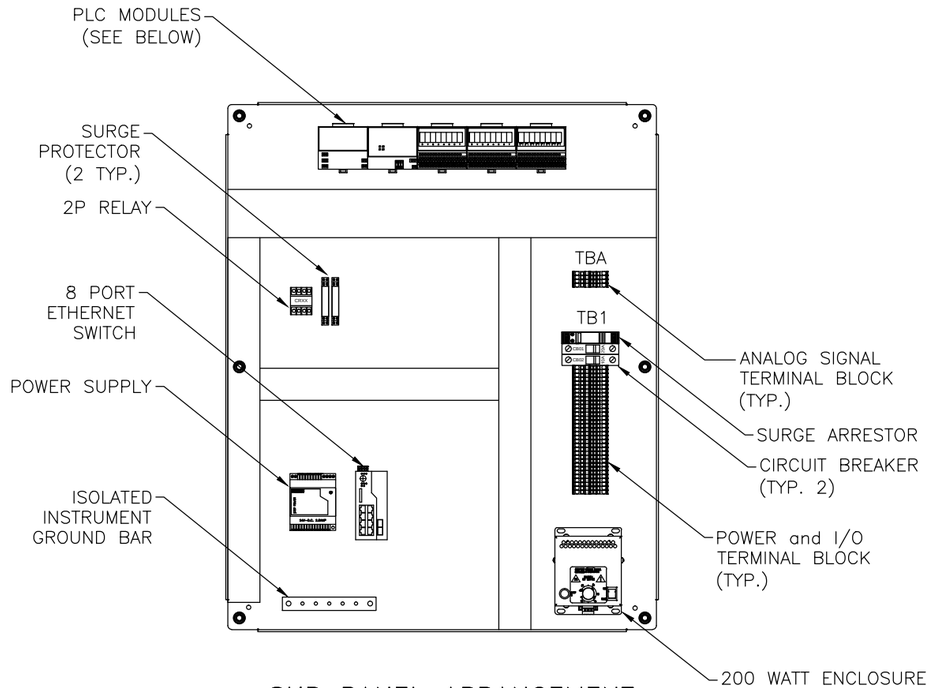

SUB PANEL ARRANGEMENT

SCALE 3/16" = 1"

GENERAL LEGEND

- = EAGLE TERMINAL BLOCK
- = MCC TERMINAL BLOCK
- = INSTRUMENT TERMINAL BLOCK
- = FIELD WIRING
- = MECHANICAL CONNECTION
- = NO WIRING CONNECTION
- = WIRING CONNECTION

NOTES:

REV	DATE	DRWN	DESCRIPTION	APP'D
1	3/21	AS	AS BUILT	PKL

REVISIONS

REFERENCE DRAWINGS
D1026-01
THRU
D1026-06

THIS DOCUMENT CONTAINS PROPRIETARY INFORMATION WITH ALL RIGHTS & TITLES RESERVED AND MAY NOT BE REPRODUCED IN WHOLE OR IN PART WITHOUT THE WRITTEN CONSENT OF EAGLE CONTROL CORP.

EAGLE CONTROL CORP.
YAPHANK N.Y.

PROJECT:
LOCKHEED MARTIN CORPORATION
OPERABLE UNITS 1 and 2
ELECTRICAL UPGRADES

TITLE:
WELL RW-1RS
REMOTE CONTROL PANEL
PANEL ARRANGEMENT

ENGINEER:	DRAWN:	SCALE:	DATE:
PKL	AS	NONE	10-28-2020

PROJECT:	DRAWING NO:	REV:
1026	D1026-01	1

NAMEPLATE DETAIL "A"

EAGLE CONTROL CORPORATION
23 OLD DOCK ROAD
YAPHANK, NY 11980
TEL: (631)924-1315

WELL RW-1RS
REMOTE CONTROL
EAGLE ORDER No. 1026

(NO SCALE)

NAMEPLATE DETAIL "B"

CONTROL PANEL ELECTRICAL DATA

LINE VOLTAGE	120VAC/1PH, 60HZ
FLA	10
PRIMARY FUSING	20A, CB
SCCR	5KA

(NO SCALE – 2"H x 4"W)

TERMINAL BLOCK LAYOUT

TBA	TB1	TB1	
A1	H	15	
A2	N	16	
SH	N1	17	
A3	N1	23	
A4	N1	24	
SH	G	25	
	L1	26	
	L1	143	TERMINALS PROVIDED FOR LSHH TO MCP-100
	L1	I:0411	
	L1	G	
	1	G	
	2	G	EQUIPMENT GROUNDS
	3	G	
	4	G	
	5	G	
	6		
	7		
	8		

NAMEPLATE SCHEDULE

NP #	QTY	NAMEPLATE INSCRIPTION	SIZE / (LENS)	NP #	QTY	NAMEPLATE INSCRIPTION	SIZE / (LENS)
1	1	RW-1RS	.75"H x 4"W	6	1	HAND – OFF – AUTO	30.5mm
2	1	VAULT HIGH LEVEL	30.5mm	7	1	PUMP FAILURE	30.5mm
3	1	LOW FLOW	30.5mm	8	1	ALARM RESET	30.5mm
4	1	120VAC POWER	30.5mm	9	1	PUSH TO STOP – PULL TO START	2.5"H x 2.5"W
5	1	PUMP RUNNING	30.5mm	10	1	I/O RESET	30.5mm

PLC MODULE DETAIL

POS. #	MODULE
1	POWER SUPPLY
2	ETHERNET COMMUNICATION ADAPTER
3	8 DIGITAL INPUTS
4	8 ISOLATED N.O. RELAY CONTACTS
5	2 ISOLATED ANALOG INPUTS, 2 OUTPUTS, 24VDC

LOCKHEED MARTIN CORPORATION
OPERABLE UNITS 1 & 2 ELECTRICAL UPGRADES

REMOTE I/O PANEL BILL OF MATERIALS

ITEM No.	QTY.	MANUFACTURER	PART NUMBER	DESCRIPTION	U.L. FILE No.	U.L. CCN
1	1	SAGINAW	SCE-36EL3012SS6LP	36"H x 30"W x 12"D ENCLOSURE	E69392	NITW
2	1	SAGINAW	SCE-36P30	SUB-PANEL	E69392	NITW
3	1	SAGINAW	SCE-HF2001A	SPACE HEATER	E358386	NITW2
4	1	SAGINAW	SCE-BVK	BREATHER VENT	E358386	NITW2
5	1	PHOENIX CONTACT	2907918 (PLT-SEC-T3-120-FM-UT)	SURGE SUPRESSOR	E330181	VZCA
6	1	SCHNEIDER ELECTRIC	M9F21120	20A CIRCUIT BREAKER	E90509	QVNU2
7	1	SCHNEIDER ELECTRIC	M9F21110	10A CIRCUIT BREAKER	E90509	QVNU2
8	2	PHOENIX CONTACT	2801512 (PT-IQ-1X2-EX-24DC-UT)	SURGE SUPPRESSOR FOR 4-20mA LOOPS	E138168	QVGQ
9	1	EATON/CUTLER-HAMMER	E34TPB120LWG2A	30mm LED PILOT LIGHT - WHITE	E1230	NKCR
10	1	EATON/CUTLER-HAMMER	E34TPB120LGG2A	30mm LED PILOT LIGHT - GREEN	E1230	NKCR
11	3	EATON/CUTLER-HAMMER	E34PB120LRG2A	30mm LED PILOT LIGHT - RED	E1230	NKCR
12	2	EATON/CUTLER-HAMMER	E34PB1-53X	30mm PUSHBUTTON	E1230	NKCR
13	1	EATON/CUTLER-HAMMER	E34VHBL1-2X	30mm 3-POSITION SWITCH	E1230	NKCR
14	1	EATON/CUTLER-HAMMER	E34GDB63LED120-1X	30mm EMERGENCY STOP PUSHBUTTON	E1230	NKCR
15	1	FINDER	60.12.8.120.0050	2-POLE RELAY, 120VAC COIL, (2) FORM C	E106390	NRNT2
16	1	FINDER	90.02	2-POLE RELAY SOCKET FOR 60 SERIES	E140923	SWIV
17	1	ALLEN-BRADLEY	1794-PS13	POWER SUPPLY	E65584	NRAQ2
18	1	ALLEN-BRADLEY	1794-AENTR	ETHERNET COMMUNICATION ADAPTER	E65584	NRAQ2
19	1	ALLEN-BRADLEY	1794-IA8	120VAC INPUT MODULE, 8 PT	E65584	NRAQ2
20	1	ALLEN-BRADLEY	1794-OW8	RELAY OUTPUT MODULE, 8 PT	E65584	NRAQ2
21	1	ALLEN-BRADLEY	1794-IF2XOF2I	ANALOG INPUT/OUTPUT MODULE, 2 PT/2 PT	E65584	NRAQ2
22	3	ALLEN-BRADLEY	1794-TB3	TERMINAL BASE	E65584	NRAQ2
23	1	PHOENIX CONTACT	2701554 (FL SWITCH 7006-2GC-EIP)	8 PORT MANAGED ETHERNET SWITCH	E140324	NKCR
24	1	PHOENIX CONTACT	2868651 STEP-PS/1AC/24DC/2.5	2.4 AMP POWER SUPPLY	E214596	QQGQ
25	30	PHOENIX CONTACT	3031364	TERMIINAL BLOCKS	E60425	XCFR2
26	2	PHOENIX CONTACT	2891081 (FL-SFP-FX)	FIBER TRANSCEIVER CARTRIDGE, 100 Mbit, MULTIMODE, LC CONNECTOR	–	–

GENERAL LEGEND

= EAGLE TERMINAL BLOCK
= MCC TERMINAL BLOCK
= INSTRUMENT TERMINAL BLOCK
= FIELD WIRING
= MECHANICAL CONNECTION
= NO WIRING CONNECTION
= WIRING CONNECTION

NOTES:

REV	DATE	DRWN	DESCRIPTION	APP'D
1	3/21	AS	AS BUILT	PKL

REVISIONS

REFERENCE DRAWINGS
D1026-01
THRU
D1026-06

THIS DOCUMENT CONTAINS PROPRIETARY INFORMATION WITH ALL RIGHTS & TITLES RESERVED AND MAY NOT BE REPRODUCED IN WHOLE OR IN PART WITHOUT THE WRITTEN CONSENT OF EAGLE CONTROL CORP.

EAGLE CONTROL CORP.
YAPHANK N.Y.

PROJECT:
LOCKHEED MARTIN CORPORATION
OPERABLE UNITS 1 and 2
ELECTRICAL UPGRADES

TITLE:
WELL RW-1RS
REMOTE CONTROL PANEL
BILL of MATERIALS

ENGINEER:	DRAWN:	SCALE:	DATE:
PKL	AS	NONE	10-28-2020

PROJECT:	DRAWING NO:	REV:
1026	D1026-02	1

FROM RW-1RS BREAKER PANEL CKT. 5 20A
LINE IN 120VAC/1ø/60HZ/20A

H
#12awg BLACK
CB1 (20amps)
N
G
#12awg WHITE
5
6
POWER LINE FILTER – SURGE ARRESTOR
1
3
2
4
L1
E-STOP
1
2
REMOVE JUMPER FOR ADDITIONAL E-STOPS AS REQUIRED
#16awg RED (TYP.)
ESR
(2)
C
(7)
EMERGENCY STOP RELAY
R
3
4
RUN BACK TO MCP-100
#14awg YELLOW
ILL-PUSHBUTTON PRESS TO TEST
W
120VAC POWER ON
HEATER
L1
N
200W
G
200W ENCLOSURE HEATER (FROM EXISTING PANEL)
CB2
(10amp)
9
INSTRUMENT POWER SUPPLY
L
N
24VDC
+
–
#16awg BLU/WHT
(24–)
111
(24+)
#16awg BLUE
CONTINUED ON D1026-05 (1794-IF2XOF2I)
#16awg BLU/WHT
112
(24–)
(24+)
#16awg BLUE
CONTINUED AT RIGHT (TBA)
POSITION 1
REMOTE I/O POWER SUPPLY
1794-PS13
C
(L1)
(N)
B
J
(+24)
GND
(+24)
G
I
(–24)
A
(–24)
H
#16awg BLUE
101
(24+)
102
(24–)
CONTINUED AT RIGHT (1794-AENTR)
#16awg BLU/WHT
#16awg BLU/WHT
104
(24–)
103
(24+)
#16awg BLUE
CONTINUED ON D1026-04 (1794-OW8)
L1
N1
CONTINUED ON D1026-04

(8)
7
ESR
SPARE
(6)
8
#14awg YELLOW (TYP.)

CONTINUED FROM BELOW LEFT

101 (24+)
#16awg BLUE
102 (24–)
#16awg WHITE/BLUE
POSITION 2
ETHERNET COMMUNICATION ADAPTER
1794-AENTR
101
C
(+24)
(–24)
B
102
.440FLA
D
E
IP ADDRESS 192.168.100.116
ETHERNET CABLE
TO 1794-AENTR

111 (24+)
112 (COM)
ETHERNET SWITCH

FIBER OPTIC CABLE
FIBER OPTIC CABLE FROM RW-1RD PANEL
FIBER OPTIC CABLE FROM EW-1 PANEL
FIBER OPTIC CABLE
SFP MODULE (TYP. 2)

GENERAL LEGEND

= EAGLE TERMINAL BLOCK
= MCC TERMINAL BLOCK
= INSTRUMENT TERMINAL BLOCK
= FIELD WIRING
= MECHANICAL CONNECTION
= NO WIRING CONNECTION
= WIRING CONNECTION

NOTES:

REV	DATE	DRWN	DESCRIPTION	APP'D
1	3/21	AS	AS BUILT	PKL

REVISIONS

REFERENCE DRAWINGS
D1026-01
THRU
D1026-06

THIS DOCUMENT CONTAINS PROPRIETARY INFORMATION WITH ALL RIGHTS & TITLES RESERVED AND MAY NOT BE REPRODUCED IN WHOLE OR IN PART WITHOUT THE WRITTEN CONSENT OF EAGLE CONTROL CORP.

EAGLE CONTROL CORP.
YAPHANK N.Y.

PROJECT:
LOCKHEED MARTIN CORPORATION
OPERABLE UNITS 1 and 2
ELECTRICAL UPGRADES

TITLE:
WELL RW-1RS
REMOTE CONTROL PANEL
POWER WIRING SCHEMATIC

ENGINEER:	DRAWN:	SCALE:	DATE:
PKL	AS	NONE	10-28-2020

PROJECT:	DRAWING NO:	REV:
1026	D1026-03	1

CONTINUED FROM D1026-03

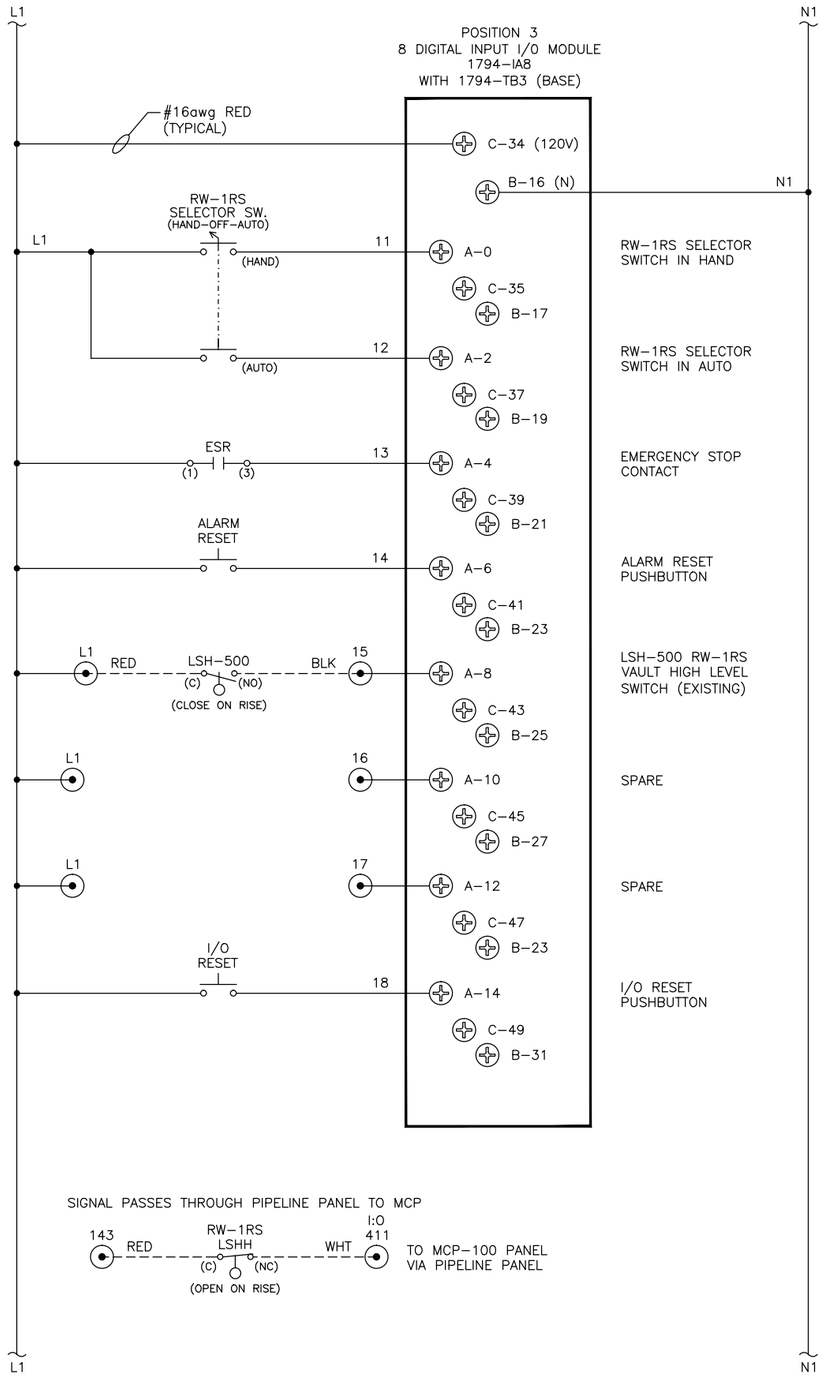

CONTINUED FROM BELOW LEFT

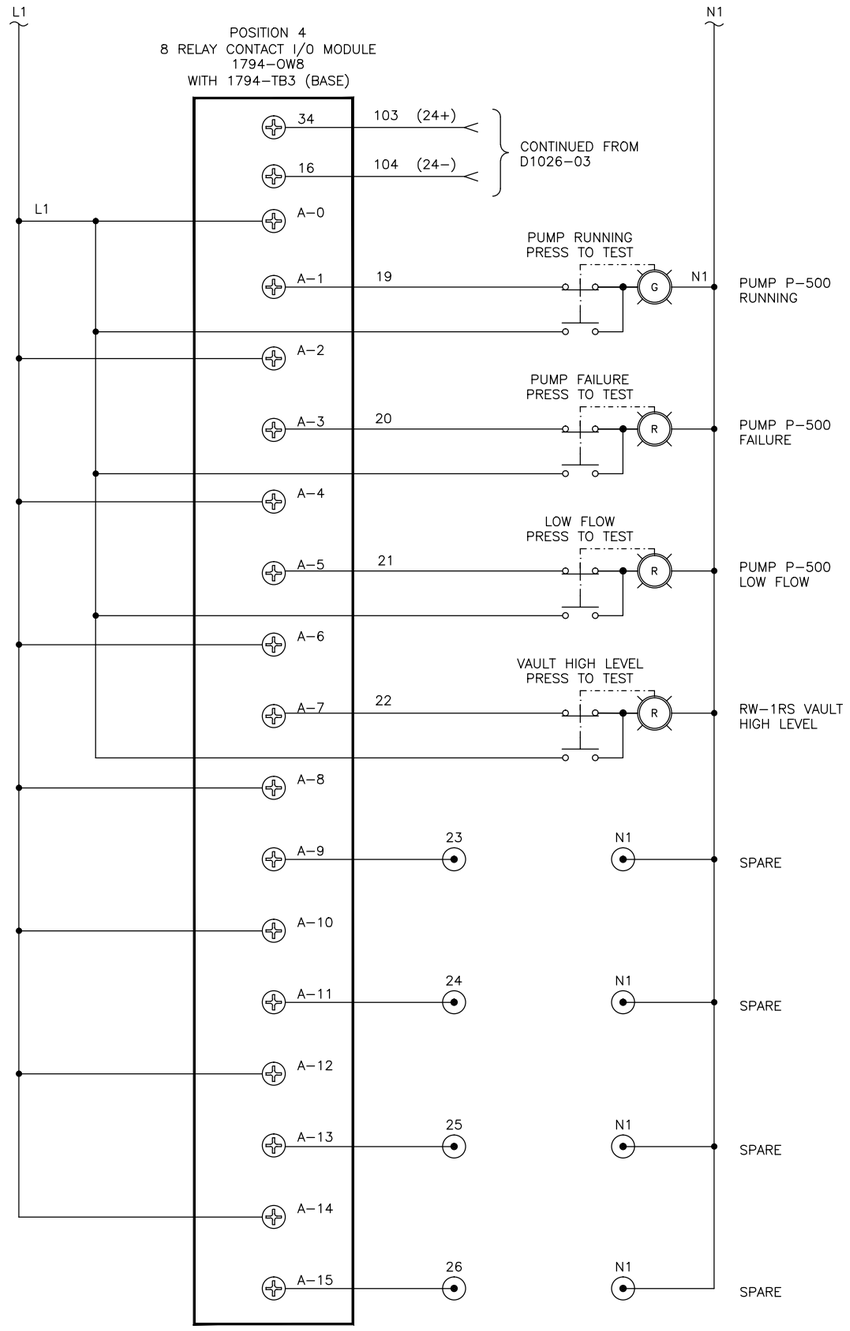

CONTINUED ABOVE RIGHT

GENERAL LEGEND

- = EAGLE TERMINAL BLOCK
- = MCC TERMINAL BLOCK
- = INSTRUMENT TERMINAL BLOCK
- = FIELD WIRING
- = MECHANICAL CONNECTION
- = NO WIRING CONNECTION
- = WIRING CONNECTION

NOTES:

REV	DATE	DRWN	DESCRIPTION	APP'D
1	3/21	AS	AS BUILT	PKL

REVISIONS

REFERENCE DRAWINGS
D1026-01
THRU
D1026-06

THIS DOCUMENT CONTAINS PROPRIETARY INFORMATION WITH ALL RIGHTS & TITLES RESERVED AND MAY NOT BE REPRODUCED IN WHOLE OR IN PART WITHOUT THE WRITTEN CONSENT OF EAGLE CONTROL CORP.

EAGLE CONTROL CORP.
YAPHANK N.Y.

PROJECT:
LOCKHEED MARTIN CORPORATION
OPERABLE UNITS 1 and 2
ELECTRICAL UPGRADES

TITLE:
WELL RW-1RS
REMOTE CONTROL PANEL
DIGITAL INPUT and RELAY OUTPUT
WIRING SCHEMATIC

ENGINEER:	DRAWN:	SCALE:	DATE:
PKL	AS	NONE	10-28-2020

PROJECT:	DRAWING NO:	REV:
1026	D1026-04	1

CONTINUED FROM D1026-03

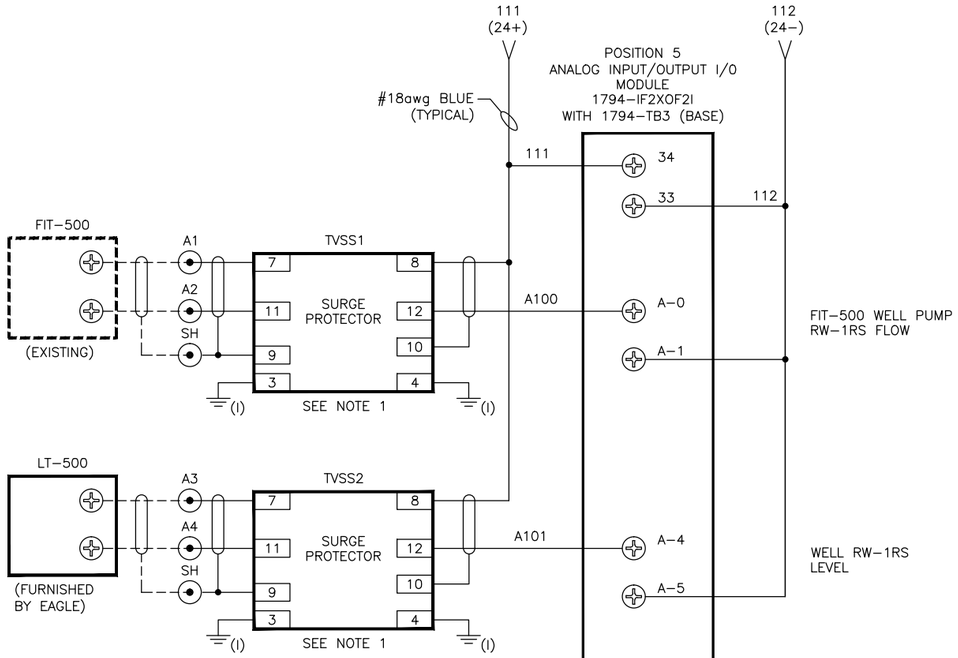

GENERAL LEGEND

- = EAGLE TERMINAL BLOCK
- = MCC TERMINAL BLOCK
- = INSTRUMENT TERMINAL BLOCK
- = FIELD WIRING
- = MECHANICAL CONNECTION
- = NO WIRING CONNECTION
- = WIRING CONNECTION

NOTES:

1. RUN GROUNDS ON TVSS's SEPARATELY TO INSTRUMENT GROUND BAR (DO NOT DAISY CHAIN) (I)

REV	DATE	DRWN	DESCRIPTION	APP'D
1	3/21	AS	AS BUILT	PKL

REVISIONS

REFERENCE DRAWINGS
D1026-01
THRU
D1026-06

THIS DOCUMENT CONTAINS PROPRIETARY INFORMATION WITH ALL RIGHTS & TITLES RESERVED AND MAY NOT BE REPRODUCED IN WHOLE OR IN PART WITHOUT THE WRITTEN CONSENT OF EAGLE CONTROL CORP.

EAGLE CONTROL CORP.
YAPHANK N.Y.

PROJECT:
LOCKHEED MARTIN CORPORATION
OPERABLE UNITS 1 and 2
ELECTRICAL UPGRADES

TITLE:
WELL RW-1RS
REMOTE CONTROL PANEL
ANALOG I/O WIRING SCHEMATIC

ENGINEER:	DRAWN:	SCALE:	DATE:
PKL	AS	NONE	10-28-2020

PROJECT:	DRAWING NO:	REV:
1026	D1026-05	1

RW–1RS REMOTE I/O PANEL

RW–1RS LIGHTING PANEL

CIRCUIT BREAKER

H

N

G

TBA

A1

A2

SH

A3

A4

SH

TB1

A1 (+)

A2 (–)

FIT–500
WELL RW–1RS
FLOW
TRANSMITTER
(EXISTING)

A3 (+)

A4 (–)

LT–500
WELL RW–1RS
LEVEL
TRANSMITTER
(FURNISHED BY
EAGLE)

3 — 20

4 — 21

RW–1RS E–STOP
STATUS TO
MCP–100

RED

BLK

L1 — 15

LSH–500
RW–1RS VAULT
HIGH LEVEL
SWITCH
(EXISTING)

RW–1RS VAULT

RED

BLK

143 — I:0411 (C) (NC)

LSHH–500
RW–1RS VAULT
HIGH HIGH LEVEL
SWITCH
(EXISTING)

RW–1RS VAULT

143

I:0411

LSHH–500 TO
MCP–100

GENERAL LEGEND

= EAGLE TERMINAL BLOCK

= MCC TERMINAL BLOCK

= INSTRUMENT TERMINAL BLOCK

= FIELD WIRING

= MECHANICAL CONNECTION

= NO WIRING CONNECTION

= WIRING CONNECTION

NOTES:

1. RUN GROUNDS ON TVSS's SEPARATELY TO INSTRUMENT GROUND BAR (DO NOT DAISY CHAIN) (I)

REV	DATE	DRWN	DESCRIPTION	APP'D
1	3/21	AS	AS BUILT	PKL

REVISIONS

REFERENCE DRAWINGS
D1026–01
THRU
D1026–06

THIS DOCUMENT CONTAINS PROPRIETARY INFORMATION WITH ALL RIGHTS & TITLES RESERVED AND MAY NOT BE REPRODUCED IN WHOLE OR IN PART WITHOUT THE WRITTEN CONSENT OF EAGLE CONTROL CORP.

EAGLE CONTROL CORP.
YAPHANK N.Y.

PROJECT:
LOCKHEED MARTIN CORPORATION
OPERABLE UNITS 1 and 2
ELECTRICAL UPGRADES

TITLE:
WELL RW–1RS
REMOTE CONTROL PANEL
INTERCONNECTION WIRING DIAGRAM

ENGINEER:	DRAWN:	SCALE:	DATE:
PKL	AS	NONE	10–28–2020

PROJECT:	DRAWING NO:	REV:
1026	D1026–06	1

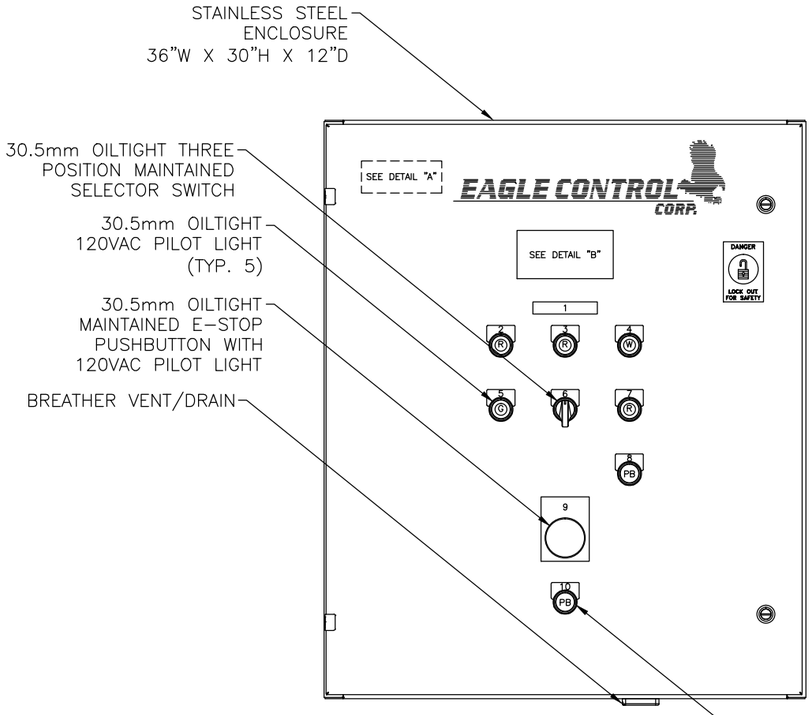

FRONT PANEL ARRANGEMENT

SCALE 3/16" = 1"

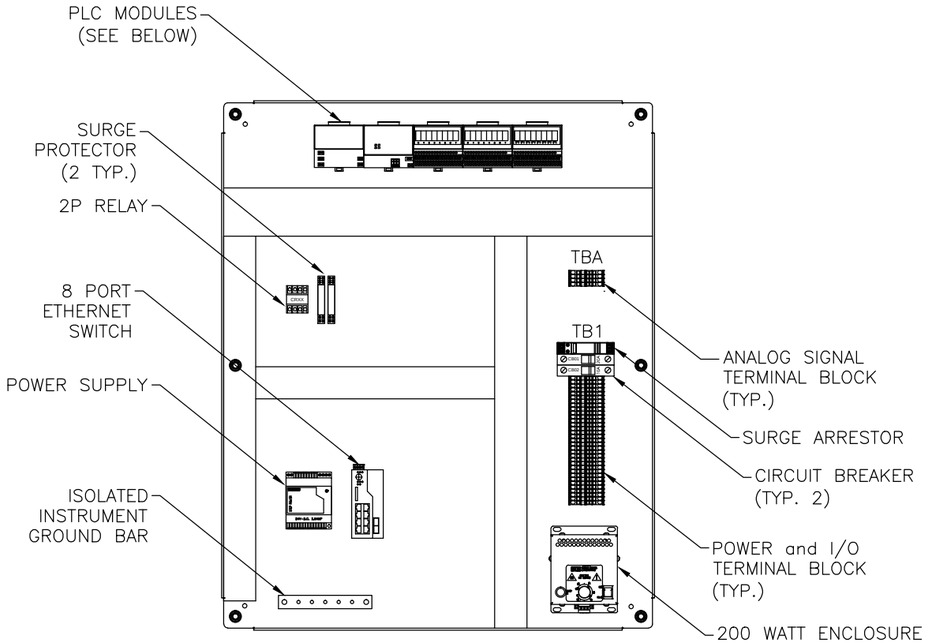

SUB PANEL ARRANGEMENT

SCALE 3/16" = 1"

NAMEPLATE DETAIL "A"

EAGLE CONTROL CORPORATION
23 OLD DOCK ROAD
YAPHANK, NY 11980
TEL: (631)924-1315

WELL RW-1RD
REMOTE CONTROL
EAGLE ORDER No. 1026

(NO SCALE)

NAMEPLATE DETAIL "B"

CONTROL PANEL ELECTRICAL DATA

LINE VOLTAGE	120VAC/1PH, 60HZ
FLA	10
PRIMARY FUSING	20A, CB
SCCR	5KA

(NO SCALE – 2"H x 4"W)

NAMEPLATE SCHEDULE

NP #	QTY	NAMEPLATE INSCRIPTION	SIZE / (LENS)	NP #	QTY	NAMEPLATE INSCRIPTION	SIZE / (LENS)
1	1	RW-1RD	.75"H x 4"W	6	1	HAND – OFF – AUTO	30.5mm
2	1	VAULT HIGH LEVEL	30.5mm	7	1	PUMP FAILURE	30.5mm
3	1	LOW FLOW	30.5mm	8	1	ALARM RESET	30.5mm
4	1	120VAC POWER	30.5mm	9	1	PUSH TO STOP – PULL TO START	2.5"H x 2.5"W
5	1	PUMP RUNNING	30.5mm	10	1	I/O RESET	30.5mm

PLC MODULE DETAIL

POS. #	MODULE
1	POWER SUPPLY
2	ETHERNET COMMUNICATION ADAPTER
3	8 DIGITAL INPUTS
4	8 ISOLATED N.O. RELAY CONTACTS
5	2 ISOLATED ANALOG INPUTS, 2 OUTPUTS, 24VDC

TERMINAL BLOCK LAYOUT

TBA	TB1	TB1	
A1	H	15	
A2	N	16	
SH	N1	17	
A3	N1	23	
A4	N1	24	
SH	G	25	
	L1	26	
	L1	143	TERMINALS PROVIDED FOR LSHH TO MCP-100
	L1	I:0410	
	L1	G	
	1	G	
	2	G	EQUIPMENT GROUNDS
	3	G	
	4	G	
	5	G	
	6		
	7		
	8		

GENERAL LEGEND

- = EAGLE TERMINAL BLOCK
- = MCC TERMINAL BLOCK
- = INSTRUMENT TERMINAL BLOCK
- = FIELD WIRING
- = MECHANICAL CONNECTION
- = NO WIRING CONNECTION
- = WIRING CONNECTION

NOTES:

REV	DATE	DRWN	DESCRIPTION	APP'D
1	3/21	AS	AS BUILT	PKL

REVISIONS

REFERENCE DRAWINGS
D1026-07
THRU
D1026-12

THIS DOCUMENT CONTAINS PROPRIETARY INFORMATION WITH ALL RIGHTS & TITLES RESERVED AND MAY NOT BE REPRODUCED IN WHOLE OR IN PART WITHOUT THE WRITTEN CONSENT OF EAGLE CONTROL CORP.

EAGLE CONTROL CORP.
YAPHANK N.Y.

PROJECT:
LOCKHEED MARTIN CORPORATION
OPERABLE UNITS 1 and 2
ELECTRICAL UPGRADES

TITLE:
WELL RW-1RD
REMOTE CONTROL PANEL
PANEL ARRANGEMENT

ENGINEER:	DRAWN:	SCALE:	DATE:
PKL	AS	NONE	10-28-2020

PROJECT:	DRAWING NO:	REV:
1026	D1026-07	1

LOCKHEED MARTIN CORPORATION
OPERABLE UNITS 1 & 2 ELECTRICAL UPGRADES

REMOTE I/O PANEL BILL OF MATERIALS

ITEM No.	QTY.	MANUFACTURER	PART NUMBER	DESCRIPTION	U.L. FILE No.	U.L. CCN
1	1	SAGINAW	SCE-36EL3012SS6LP	36"H x 30"W x 12"D ENCLOSURE	E69392	NITW
2	1	SAGINAW	SCE-36P30	SUB-PANEL	E69392	NITW
3	1	SAGINAW	SCE-HF2001A	SPACE HEATER	E358386	NITW2
4	1	SAGINAW	SCE-BVK	BREATHER VENT	E358386	NITW2
5	1	PHOENIX CONTACT	2907918 (PLT-SEC-T3-120-FM-UT)	SURGE SUPRESSOR	E330181	VZCA
6	1	SCHNEIDER ELECTRIC	M9F21120	20A CIRCUIT BREAKER	E90509	QVNU2
7	1	SCHNEIDER ELECTRIC	M9F21110	10A CIRCUIT BREAKER	E90509	QVNU2
8	2	PHOENIX CONTACT	2801512 (PT-IQ-1X2-EX-24DC-UT)	SURGE SUPPRESSOR FOR 4-20mA LOOPS	E138168	QVGQ
9	1	EATON/CUTLER-HAMMER	E34TPB120LWG2A	30mm LED PILOT LIGHT - WHITE	E1230	NKCR
10	1	EATON/CUTLER-HAMMER	E34TPB120LGG2A	30mm LED PILOT LIGHT - GREEN	E1230	NKCR
11	3	EATON/CUTLER-HAMMER	E34PB120LRG2A	30mm LED PILOT LIGHT - RED	E1230	NKCR
12	2	EATON/CUTLER-HAMMER	E34PB1-53X	30mm PUSHBUTTON	E1230	NKCR
13	1	EATON/CUTLER-HAMMER	E34VHBL1-2X	30mm 3-POSITION SWITCH	E1230	NKCR
14	1	EATON/CUTLER-HAMMER	E34GDB63LED120-1X	30mm EMERGENCY STOP PUSHBUTTON	E1230	NKCR
15	1	FINDER	60.12.8.120.0050	2-POLE RELAY, 120VAC COIL, (2) FORM C	E106390	NRNT2
16	1	FINDER	90.02	2-POLE RELAY SOCKET FOR 60 SERIES	E140923	SWIV
17	1	ALLEN-BRADLEY	1794-PS13	POWER SUPPLY	E65584	NRAQ2
18	1	ALLEN-BRADLEY	1794-AENTR	ETHERNET COMMUNICATION ADAPTER	E65584	NRAQ2
19	1	ALLEN-BRADLEY	1794-IA8	120VAC INPUT MODULE, 8 PT	E65584	NRAQ2
20	1	ALLEN-BRADLEY	1794-OW8	RELAY OUTPUT MODULE, 8 PT	E65584	NRAQ2
21	1	ALLEN-BRADLEY	1794-IF2XOF2I	ANALOG INPUT/OUTPUT MODULE, 2 PT/2 PT	E65584	NRAQ2
22	3	ALLEN-BRADLEY	1794-TB3	TERMINAL BASE	E65584	NRAQ2
23	1	PHOENIX CONTACT	2701554 (FL SWITCH 7006-2GC-EIP)	8 PORT MANAGED ETHERNET SWITCH	E140324	NKCR
24	1	PHOENIX CONTACT	2868651 STEP-PS/1AC/24DC/2.5	2.4 AMP POWER SUPPLY	E214596	QQGQ
25	30	PHOENIX CONTACT	3031364	TERMIINAL BLOCKS	E60425	XCFR2
26	2	PHOENIX CONTACT	2891081 (FL-SFP-FX)	FIBER TRANSCEIVER CARTRIDGE, 100 Mbit, MULTIMODE, LC CONNECTOR	–	–

GENERAL LEGEND

= EAGLE TERMINAL BLOCK
= MCC TERMINAL BLOCK
= INSTRUMENT TERMINAL BLOCK
= FIELD WIRING
= MECHANICAL CONNECTION
= NO WIRING CONNECTION
= WIRING CONNECTION

NOTES:

REV	DATE	DRWN	DESCRIPTION	APP'D
1	3/21	AS	AS BUILT	PKL

REVISIONS

REFERENCE DRAWINGS
D1026-07
THRU
D1026-12

THIS DOCUMENT CONTAINS PROPRIETARY INFORMATION WITH ALL RIGHTS & TITLES RESERVED AND MAY NOT BE REPRODUCED IN WHOLE OR IN PART WITHOUT THE WRITTEN CONSENT OF EAGLE CONTROL CORP.

EAGLE CONTROL CORP.
YAPHANK N.Y.

PROJECT:
LOCKHEED MARTIN CORPORATION
OPERABLE UNITS 1 and 2
ELECTRICAL UPGRADES

TITLE:
WELL RW-1RD
REMOTE CONTROL PANEL
BILL of MATERIALS

ENGINEER:	DRAWN:	SCALE:	DATE:
PKL	AS	NONE	10-28-2020

PROJECT:	DRAWING NO:	REV:
1026	D1026-08	1

FROM RW-1RD BREAKER PANEL CKT. 7 20A
LINE IN 120VAC/1ø/60HZ/20A

H
#12awg BLACK
CB1 (20amps)
N
G
#12awg WHITE
5
6
POWER LINE FILTER – SURGE ARRESTOR
1
2
3
4
L1
E-STOP
REMOVE JUMPER FOR ADDITIONAL E-STOPS AS REQUIRED
1
2
#16awg RED (TYP.)
ESR
(2)
C
(7)
EMERGENCY STOP RELAY
R
3
4
RUN BACK TO MCP-100
#14awg YELLOW
ILL-PUSHBUTTON PRESS TO TEST
W
120VAC POWER ON
HEATER
L1
N
200W
G
200W ENCLOSURE HEATER (FROM EXISTING PANEL)
CB2
(10amp)
9
INSTRUMENT POWER SUPPLY
L
N
24VDC
+
–
#16awg BLU/WHT
(24–)
111
(24+)
#16awg BLUE
CONTINUED ON D1026-11 (1794-IF2XOF2I)
#16awg BLU/WHT
(24–)
112
(24+)
#16awg BLUE
CONTINUED AT RIGHT (TBA)
POSITION 1
REMOTE I/O POWER SUPPLY
1794-PS13
C
(L1)
(N)
B
J
(+24)
GND
(+24)
G
I
(–24)
A
(–24)
H
#16awg BLUE
101
(24+)
102
(24–)
CONTINUED AT RIGHT (1794-AENTR)
#16awg BLU/WHT
#16awg BLU/WHT
104
(24–)
103
(24+)
#16awg BLUE
CONTINUED ON D1026-10 (1794-OW8)
L1
N1
CONTINUED ON D1026-10

(8)
7
ESR
SPARE
(6)
8
#14awg YELLOW (TYP.)

CONTINUED FROM BELOW LEFT

101
(24+)
#16awg BLUE
102
(24–)
#16awg WHITE/BLUE
POSITION 2
ETHERNET COMMUNICATION ADAPTER
1794-AENTR
101
C
(+24)
(–24)
B
102
.440FLA
D
E
IP ADDRESS
192.168.100.117
ETHERNET CABLE
TO 1794-AENTR
111
(24+)
112
(COM)
ETHERNET SWITCH
FIBER OPTIC CABLE
FIBER OPTIC CABLE FROM RW-1RS PANEL
FIBER OPTIC CABLE FROM OU1 MCP-100 PANEL
FIBER OPTIC CABLE
SFP MODULE (TYP. 2)

GENERAL LEGEND

= EAGLE TERMINAL BLOCK
= MCC TERMINAL BLOCK
= INSTRUMENT TERMINAL BLOCK
= FIELD WIRING
= MECHANICAL CONNECTION
= NO WIRING CONNECTION
= WIRING CONNECTION

NOTES:

REV	DATE	DRWN	DESCRIPTION	APP'D
1	3/21	AS	AS BUILT	PKL

REVISIONS

REFERENCE DRAWINGS
D1026-07
THRU
D1026-12

THIS DOCUMENT CONTAINS PROPRIETARY INFORMATION WITH ALL RIGHTS & TITLES RESERVED AND MAY NOT BE REPRODUCED IN WHOLE OR IN PART WITHOUT THE WRITTEN CONSENT OF EAGLE CONTROL CORP.

EAGLE CONTROL CORP.
YAPHANK N.Y.

PROJECT:
LOCKHEED MARTIN CORPORATION
OPERABLE UNITS 1 and 2
ELECTRICAL UPGRADES

TITLE:
WELL RW-1RD
REMOTE CONTROL PANEL
POWER WIRING SCHEMATIC

ENGINEER:	DRAWN:	SCALE:	DATE:
PKL	AS	NONE	10-28-2020

PROJECT:	DRAWING NO:	REV:
1026	D1026-09	1

CONTINUED FROM D1026-09

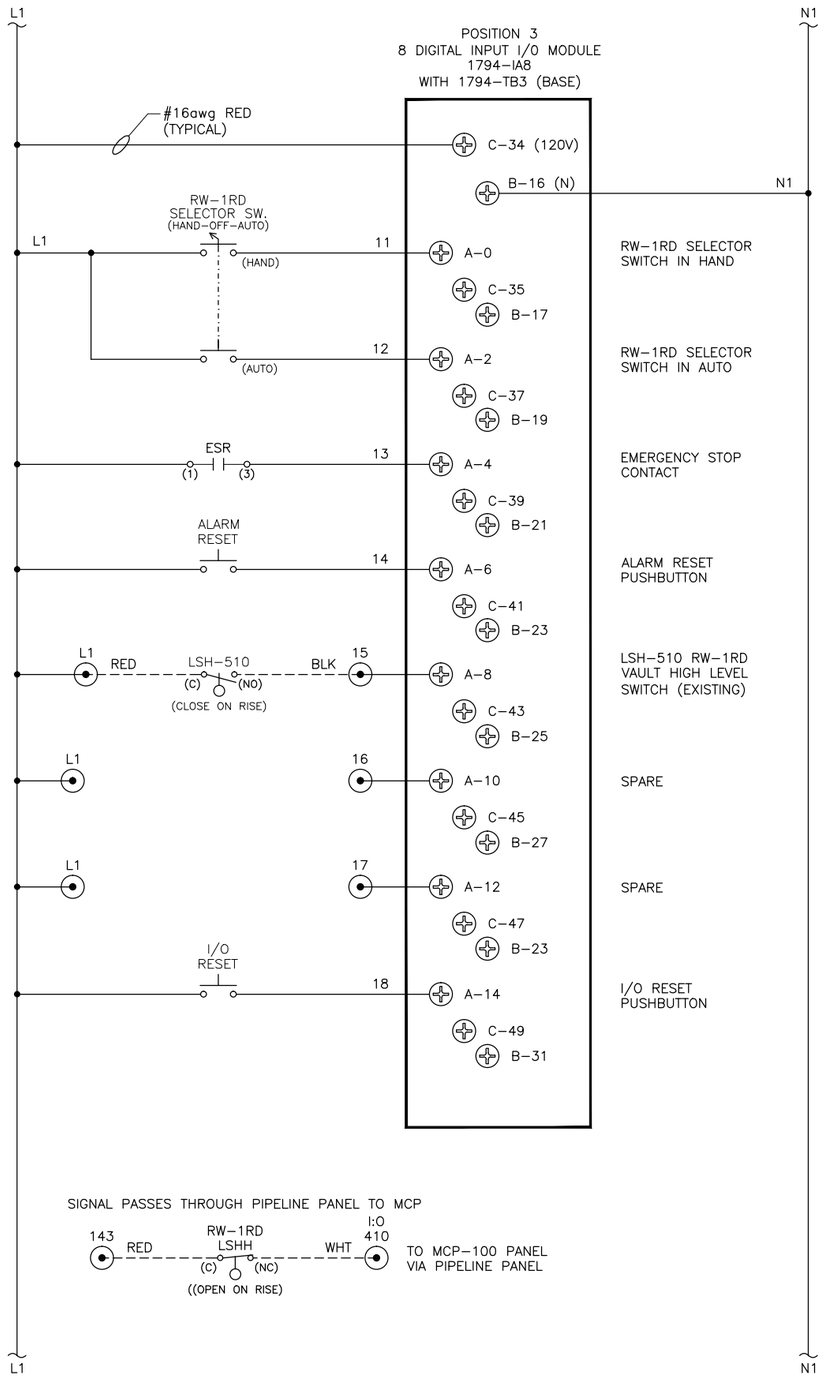

CONTINUED ABOVE RIGHT

CONTINUED FROM BELOW LEFT

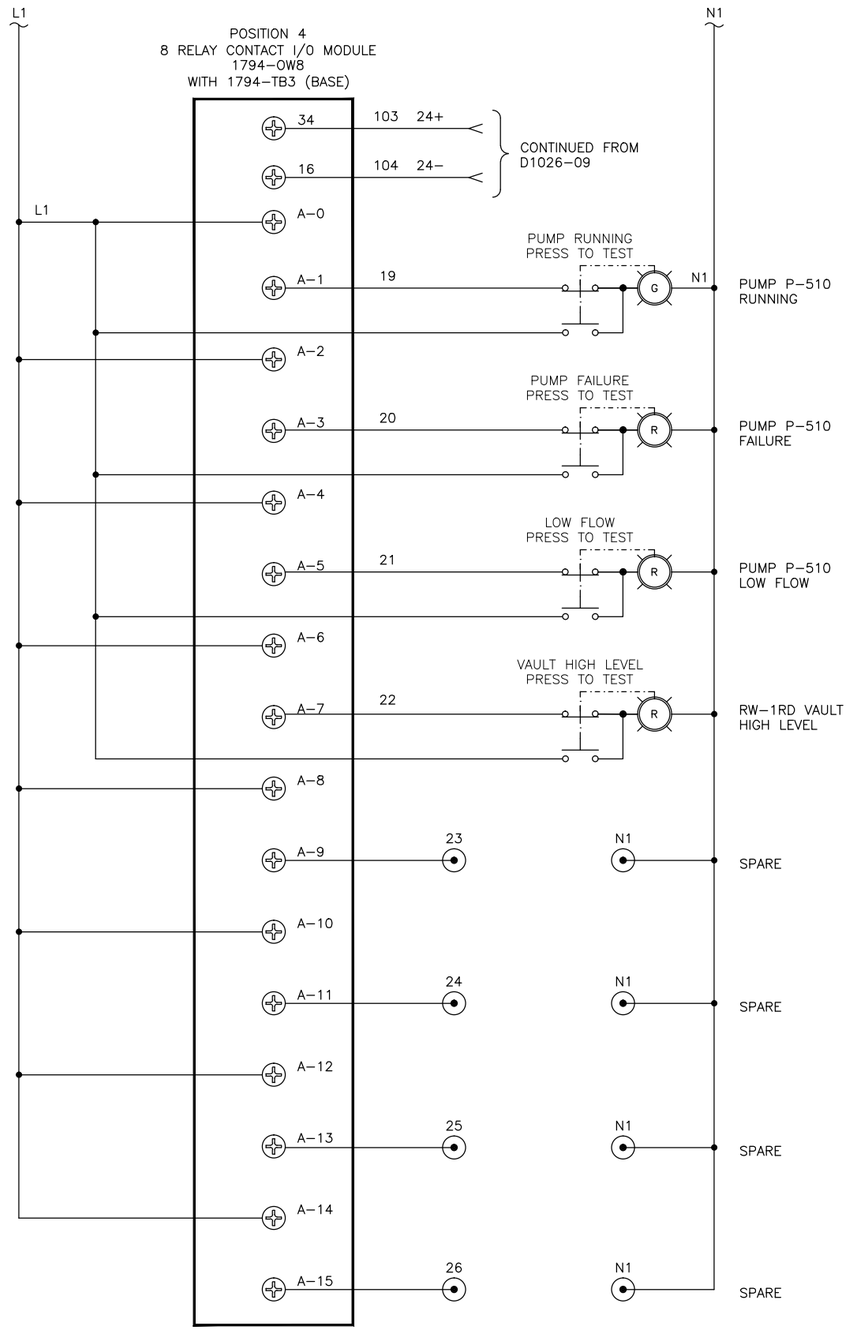

GENERAL LEGEND

- = EAGLE TERMINAL BLOCK
- = MCC TERMINAL BLOCK
- = INSTRUMENT TERMINAL BLOCK
- = FIELD WIRING
- = MECHANICAL CONNECTION
- = NO WIRING CONNECTION
- = WIRING CONNECTION

NOTES:

REV	DATE	DRWN	DESCRIPTION	APP'D
1	3/21	AS	AS BUILT	PKL

REVISIONS

REFERENCE DRAWINGS
D1026-07
THRU
D1026-12

THIS DOCUMENT CONTAINS PROPRIETARY INFORMATION WITH ALL RIGHTS & TITLES RESERVED AND MAY NOT BE REPRODUCED IN WHOLE OR IN PART WITHOUT THE WRITTEN CONSENT OF EAGLE CONTROL CORP.

EAGLE CONTROL CORP.
YAPHANK N.Y.

PROJECT:
LOCKHEED MARTIN CORPORATION
OPERABLE UNITS 1 and 2
ELECTRICAL UPGRADES

TITLE:
WELL RW-1RD
REMOTE CONTROL PANEL
DIGITAL INPUT and RELAY OUTPUT
WIRING SCHEMATIC

ENGINEER:	DRAWN:	SCALE:	DATE:
PKL	AS	NONE	10-28-2020

PROJECT:	DRAWING NO:	REV:
1026	D1026-10	1

CONTINUED FROM D1026-10

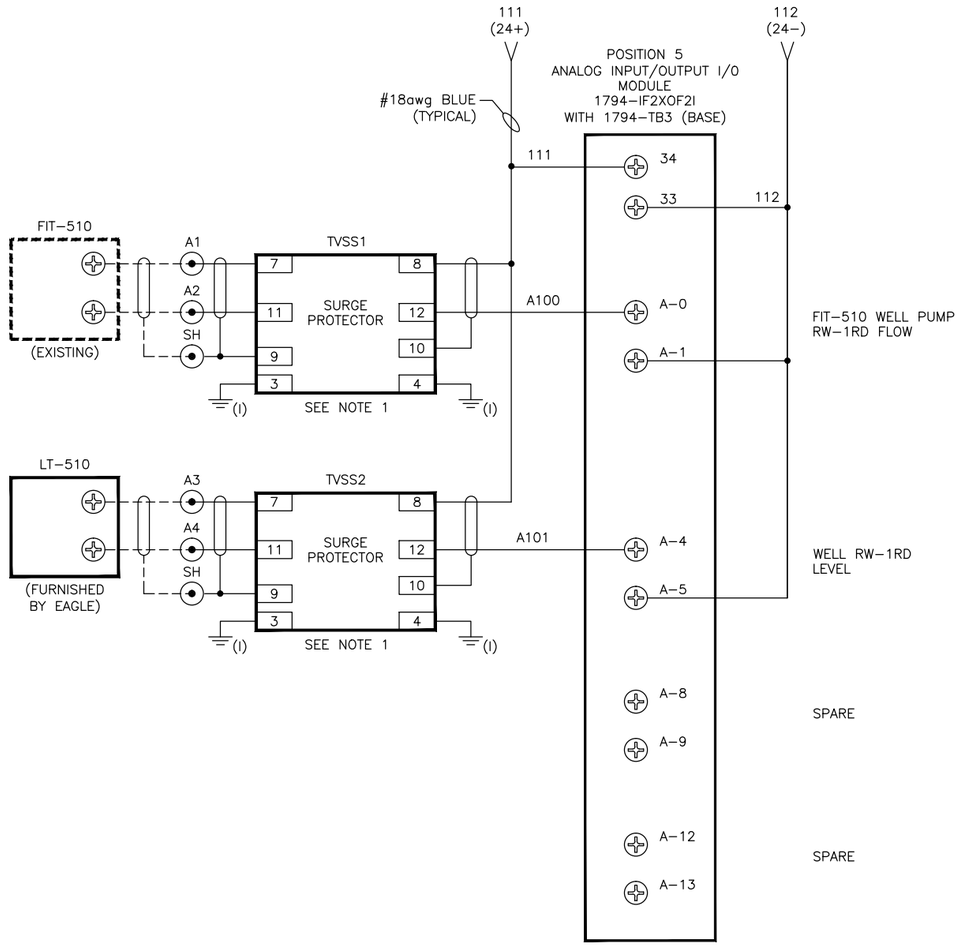

GENERAL LEGEND

- = EAGLE TERMINAL BLOCK
- = MCC TERMINAL BLOCK
- = INSTRUMENT TERMINAL BLOCK
- = FIELD WIRING
- = MECHANICAL CONNECTION
- = NO WIRING CONNECTION
- = WIRING CONNECTION

NOTES:

1. RUN GROUNDS ON TVSS's SEPARATELY TO INSTRUMENT GROUND BAR (DO NOT DAISY CHAIN) (I)

REV	DATE	DRWN	DESCRIPTION	APP'D
1	3/21	AS	AS BUILT	PKL

REVISIONS

REFERENCE DRAWINGS
D1026-07
THRU
D1026-12

THIS DOCUMENT CONTAINS PROPRIETARY INFORMATION WITH ALL RIGHTS & TITLES RESERVED AND MAY NOT BE REPRODUCED IN WHOLE OR IN PART WITHOUT THE WRITTEN CONSENT OF EAGLE CONTROL CORP.

EAGLE CONTROL CORP.
YAPHANK N.Y.

PROJECT:
LOCKHEED MARTIN CORPORATION
OPERABLE UNITS 1 and 2
ELECTRICAL UPGRADES

TITLE:
WELL RW-1RD
REMOTE CONTROL PANEL
ANALOG I/O WIRING SCHEMATIC

ENGINEER:	DRAWN:	SCALE:	DATE:
PKL	AS	NONE	10-28-2020

PROJECT:	DRAWING NO:	REV:
1026	D1026-11	1

RW–1RD REMOTE I/O PANEL

RW–1RD LIGHTING PANEL

CIRCUIT BREAKER

H

N

G

TBA

A1

A2

SH

A3

A4

SH

TB1

A1 (+)

A2 (–)

FIT–510
WELL RW–1RD
FLOW
TRANSMITTER
(EXISTING)

A3 (+)

A4 (–)

LT–510
WELL RW–1RD
LEVEL
TRANSMITTER
(FURNISHED BY
EAGLE)

3 — 23B

4 — 23C

RW–1RD E–STOP
STATUS TO
MCP–100

RED — L1 — 15

BLK

LSH–510
RW–1RD VAULT
HIGH LEVEL
SWITCH
(EXISTING)

RW–1RD VAULT

RED — 143 — I:0410 (C) (NC)

WHT

LSHH–510
RW–1RD VAULT
HIGH HIGH LEVEL
SWITCH
(EXISTING)

RW–1RD VAULT

143

I:0410

LSHH–510 TO
MCP–100

GENERAL LEGEND

= EAGLE TERMINAL BLOCK

= MCC TERMINAL BLOCK

= INSTRUMENT TERMINAL BLOCK

= FIELD WIRING

= MECHANICAL CONNECTION

= NO WIRING CONNECTION

= WIRING CONNECTION

NOTES:

1. RUN GROUNDS ON TVSS's SEPARATELY TO INSTRUMENT GROUND BAR (DO NOT DAISY CHAIN) (I)

REV	DATE	DRWN	DESCRIPTION	APP'D
1	3/21	AS	AS BUILT	PKL

REVISIONS

REFERENCE DRAWINGS
D1026–07
THRU
D1026–12

THIS DOCUMENT CONTAINS PROPRIETARY INFORMATION WITH ALL RIGHTS & TITLES RESERVED AND MAY NOT BE REPRODUCED IN WHOLE OR IN PART WITHOUT THE WRITTEN CONSENT OF EAGLE CONTROL CORP.

EAGLE CONTROL CORP.
YAPHANK N.Y.

PROJECT:
LOCKHEED MARTIN CORPORATION
OPERABLE UNITS 1 and 2
ELECTRICAL UPGRADES

TITLE:
WELL RW–1RD
REMOTE CONTROL PANEL
INTERCONNECTION WIRING DIAGRAM

ENGINEER:	DRAWN:	SCALE:	DATE:
PKL	AS	NONE	10–28–2020

PROJECT:	DRAWING NO:	REV:
1026	D1026–12	1

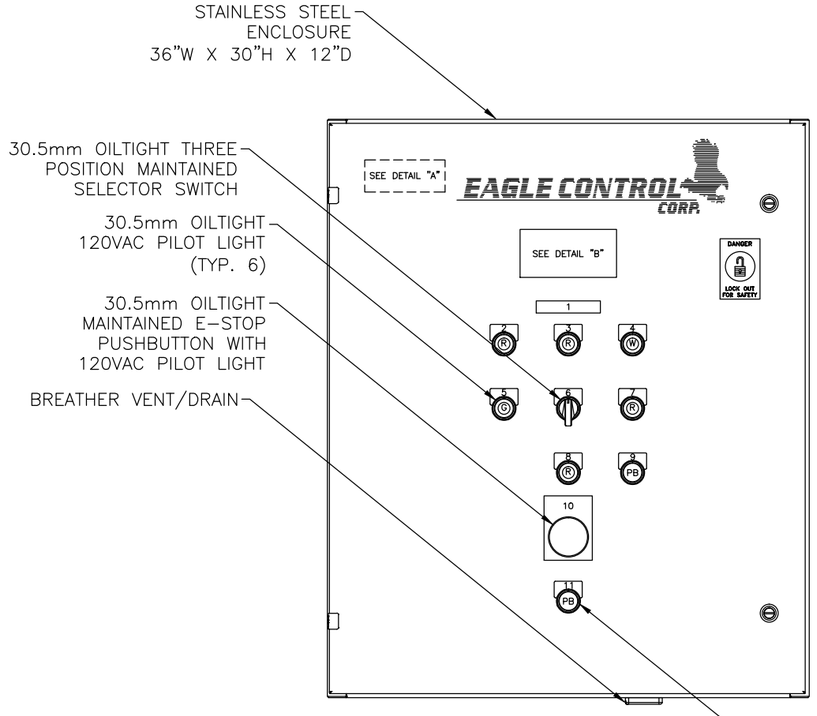

FRONT PANEL ARRANGEMENT

SCALE 3/16" = 1"

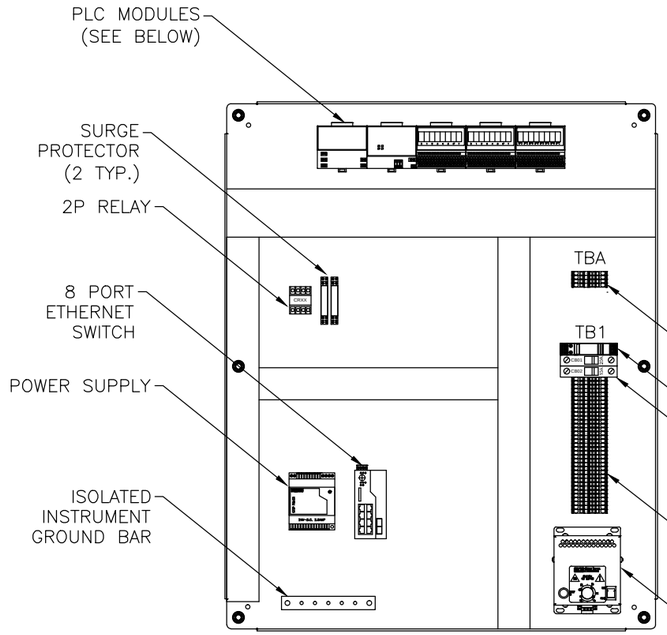

SUB PANEL ARRANGEMENT

SCALE 3/16" = 1"

NAMEPLATE DETAIL "A"

EAGLE CONTROL CORPORATION
23 OLD DOCK ROAD
YAPHANK, NY 11980
TEL: (631)924-1315

WELL EW-1R
REMOTE CONTROL
EAGLE ORDER No. 1026

(NO SCALE)

NAMEPLATE DETAIL "B"

CONTROL PANEL ELECTRICAL DATA

LINE VOLTAGE	120VAC/1PH, 60HZ
FLA	10
PRIMARY FUSING	20A, CB
SCCR	5KA

(NO SCALE – 2"H x 4"W)

NAMEPLATE SCHEDULE

NP #	QTY	NAMEPLATE INSCRIPTION	SIZE / (LENS)	NP #	QTY	NAMEPLATE INSCRIPTION	SIZE / (LENS)
1	1	EW-1R	.75"H x 4"W	7	1	PUMP FAILURE	30.5mm
2	1	EW-1 VAULT HIGH LEVEL	30.5mm	8	1	LOW FLOW	30.5mm
3	1	EW-1R VAULT HIGH LEVEL	30.5mm	9	1	ALARM RESET	30.5mm
4	1	120VAC POWER	30.5mm	10	1	PUSH TO STOP – PULL TO START	2.5"H x 2.5"W
5	1	PUMP RUNNING	30.5mm	11	1	I/O RESET	30.5mm
6	1	HAND – OFF – AUTO	30.5mm				

PLC MODULE DETAIL

POS. #	MODULE
1	POWER SUPPLY
2	ETHERNET COMMUNICATION ADAPTER
3	8 DIGITAL INPUTS
4	8 ISOLATED N.O. RELAY CONTACTS
5	2 ISOLATED ANALOG INPUTS, 2 OUTPUTS, 24VDC

TERMINAL BLOCK LAYOUT

TBA	TB1	TB1	
A1	H	15	
A2	N	16	
SH	N1	17	
A3	N1	24	
A4	N1	25	
SH	G	26	
	L1	143	TERMINALS PROVIDED FOR LSHH TO MCP-100
	L1	143A	
	L1	143B	
	L1	I:0412	
	1	G	EQUIPMENT GROUNDS
	2	G	
	3	G	
	4	G	
	5	G	
	6	G	
	7		
	8		

GENERAL LEGEND

- = EAGLE TERMINAL BLOCK
- = MCC TERMINAL BLOCK
- = INSTRUMENT TERMINAL BLOCK
- = FIELD WIRING
- = MECHANICAL CONNECTION
- = NO WIRING CONNECTION
- = WIRING CONNECTION

NOTES:

REV	DATE	DRWN	DESCRIPTION	APP'D
1	3/21	AS	AS BUILT	PKL

REVISIONS

REFERENCE DRAWINGS
D1026-13
THRU
D1026-18

THIS DOCUMENT CONTAINS PROPRIETARY INFORMATION WITH ALL RIGHTS & TITLES RESERVED AND MAY NOT BE REPRODUCED IN WHOLE OR IN PART WITHOUT THE WRITTEN CONSENT OF EAGLE CONTROL CORP.

EAGLE CONTROL CORP.
YAPHANK N.Y.

PROJECT:
LOCKHEED MARTIN CORPORATION
OPERABLE UNITS 1 and 2
ELECTRICAL UPGRADES

TITLE:
WELL EW-1R
REMOTE CONTROL PANEL
PANEL ARRANGEMENT

ENGINEER:	DRAWN:	SCALE:	DATE:
PKL	AS	NONE	10-28-2020

PROJECT:	DRAWING NO:	REV:
1026	D1026-13	1

LOCKHEED MARTIN CORPORATION
OPERABLE UNITS 1 & 2 ELECTRICAL UPGRADES

REMOTE I/O PANEL BILL OF MATERIALS

ITEM No.	QTY.	MANUFACTURER	PART NUMBER	DESCRIPTION	U.L. FILE No.	U.L. CCN
1	1	SAGINAW	SCE-36EL3012SS6LP	36"H x 30"W x 12"D ENCLOSURE	E69392	NITW
2	1	SAGINAW	SCE-36P30	SUB-PANEL	E69392	NITW
3	1	SAGINAW	SCE-HF2001A	SPACE HEATER	E358386	NITW2
4	1	SAGINAW	SCE-BVK	BREATHER VENT	E358386	NITW2
5	1	PHOENIX CONTACT	2907918 (PLT-SEC-T3-120-FM-UT)	SURGE SUPRESSOR	E330181	VZCA
6	1	SCHNEIDER ELECTRIC	M9F21120	20A CIRCUIT BREAKER	E90509	QVNU2
7	1	SCHNEIDER ELECTRIC	M9F21110	10A CIRCUIT BREAKER	E90509	QVNU2
8	2	PHOENIX CONTACT	2801512 (PT-IQ-1X2-EX-24DC-UT)	SURGE SUPPRESSOR FOR 4-20mA LOOPS	E138168	QVGQ
9	1	EATON/CUTLER-HAMMER	E34TPB120LWG2A	30mm LED PILOT LIGHT - WHITE	E1230	NKCR
10	1	EATON/CUTLER-HAMMER	E34TPB120LGG2A	30mm LED PILOT LIGHT - GREEN	E1230	NKCR
11	3	EATON/CUTLER-HAMMER	E34PB120LRG2A	30mm LED PILOT LIGHT - RED	E1230	NKCR
12	2	EATON/CUTLER-HAMMER	E34PB1-53X	30mm PUSHBUTTON	E1230	NKCR
13	1	EATON/CUTLER-HAMMER	E34VHBL1-2X	30mm 3-POSITION SWITCH	E1230	NKCR
14	1	EATON/CUTLER-HAMMER	E34GDB63LED120-1X	30mm EMERGENCY STOP PUSHBUTTON	E1230	NKCR
15	1	FINDER	60.12.8.120.0050	2-POLE RELAY, 120VAC COIL, (2) FORM C	E106390	NRNT2
16	1	FINDER	90.02	2-POLE RELAY SOCKET FOR 60 SERIES	E140923	SWIV
17	1	ALLEN-BRADLEY	1794-PS13	POWER SUPPLY	E65584	NRAQ2
18	1	ALLEN-BRADLEY	1794-AENTR	ETHERNET COMMUNICATION ADAPTER	E65584	NRAQ2
19	1	ALLEN-BRADLEY	1794-IA8	120VAC INPUT MODULE, 8 PT	E65584	NRAQ2
20	1	ALLEN-BRADLEY	1794-OW8	RELAY OUTPUT MODULE, 8 PT	E65584	NRAQ2
21	1	ALLEN-BRADLEY	1794-IF2XOF2I	ANALOG INPUT/OUTPUT MODULE, 2 PT/2 PT	E65584	NRAQ2
22	3	ALLEN-BRADLEY	1794-TB3	TERMINAL BASE	E65584	NRAQ2
23	1	PHOENIX CONTACT	2701554 (FL SWITCH 7006-2GC-EIP)	8 PORT MANAGED ETHERNET SWITCH	E140324	NKCR
24	1	PHOENIX CONTACT	2868651 STEP-PS/1AC/24DC/2.5	2.4 AMP POWER SUPPLY	E214596	QQGQ
25	30	PHOENIX CONTACT	3031364	TERMIINAL BLOCKS	E60425	XCFR2
26	2	PHOENIX CONTACT	2891081 (FL-SFP-FX)	FIBER TRANSCEIVER CARTRIDGE, 100 Mbit, MULTIMODE, LC CONNECTOR	–	–

GENERAL LEGEND

= EAGLE TERMINAL BLOCK
= MCC TERMINAL BLOCK
= INSTRUMENT TERMINAL BLOCK
= FIELD WIRING
= MECHANICAL CONNECTION
= NO WIRING CONNECTION
= WIRING CONNECTION

NOTES:

REV	DATE	DRWN	DESCRIPTION	APP'D
1	3/21	AS	AS BUILT	PKL

REVISIONS

REFERENCE DRAWINGS
D1026-13
THRU
D1026-18

THIS DOCUMENT CONTAINS PROPRIETARY INFORMATION WITH ALL RIGHTS & TITLES RESERVED AND MAY NOT BE REPRODUCED IN WHOLE OR IN PART WITHOUT THE WRITTEN CONSENT OF EAGLE CONTROL CORP.

EAGLE CONTROL CORP.
YAPHANK N.Y.

PROJECT:
LOCKHEED MARTIN CORPORATION
OPERABLE UNITS 1 and 2
ELECTRICAL UPGRADES

TITLE:
WELL EW-1R
REMOTE CONTROL PANEL
BILL of MATERIALS

ENGINEER:	DRAWN:	SCALE:	DATE:
PKL	AS	NONE	10-28-2020

PROJECT:	DRAWING NO:	REV:
1026	D1026-14	1

FROM EW-1R BREAKER PANEL CKT. 1 20A
LINE IN 120VAC/1ø/60HZ/20A

H
#12awg BLACK
CB1 (20amps)
N
G
#12awg WHITE
5
6
POWER LINE FILTER – SURGE ARRESTOR
1
3
2
4
L1
E-STOP
1
2
REMOVE JUMPER FOR ADDITIONAL E-STOPS AS REQUIRED
#16awg RED (TYP.)
ESR
(2)
C
(7)
EMERGENCY STOP RELAY
R
3
4
RUN BACK TO MCP-100
#14awg YELLOW
ILL-PUSHBUTTON PRESS TO TEST
W
120VAC POWER ON
HEATER
L1
N
200W
G
200W ENCLOSURE HEATER (FROM EXISTING PANEL)
CB2 (10amp)
9
INSTRUMENT POWER SUPPLY
L
N
24VDC
+
–
#16awg BLU/WHT
(24–)
111
(24+)
#16awg BLUE
CONTINUED ON D1026-17 (1794-IF2XOF2I)
#16awg BLU/WHT
112
(24–)
(24+)
#16awg BLUE
CONTINUED AT RIGHT (TBA)
POSITION 1
REMOTE I/O POWER SUPPLY
1794-PS13
C
(L1)
(N)
B
J
(+24)
GND
(+24)
G
I
(–24)
A
(–24)
H
#16awg BLUE
101
(24+)
102
(24–)
CONTINUED AT RIGHT (1794-AENTR)
#16awg BLU/WHT
#16awg BLU/WHT
104
(24–)
103
(24+)
#16awg BLUE
CONTINUED ON D1026-16 (1794-OW8)
L1
N1
CONTINUED ON D1026-16

(8)
7
ESR
SPARE
(6)
8
#14awg YELLOW (TYP.)

CONTINUED FROM BELOW LEFT

101 (24+)
#16awg BLUE
102 (24–)
#16awg WHITE/BLUE
POSITION 2
ETHERNET COMMUNICATION ADAPTER
1794-AENTR
101
C
(+24)
(–24)
B
102
.440FLA
D
E
IP ADDRESS 192.168.100.115
ETHERNET CABLE
TO 1794-AENTR

111 (24+)
112 (COM)
ETHERNET SWITCH

FIBER OPTIC CABLE
FIBER OPTIC CABLE FROM RW-3 PANEL
FIBER OPTIC CABLE FROM RW-1RS PANEL
FIBER OPTIC CABLE
SFP MODULE (TYP. 2)

GENERAL LEGEND

= EAGLE TERMINAL BLOCK
= MCC TERMINAL BLOCK
= INSTRUMENT TERMINAL BLOCK
= FIELD WIRING
= MECHANICAL CONNECTION
= NO WIRING CONNECTION
= WIRING CONNECTION

NOTES:

REV	DATE	DRWN	DESCRIPTION	APP'D
1	3/21	AS	AS BUILT	PKL

REVISIONS

REFERENCE DRAWINGS
D1026-13
THRU
D1026-18

THIS DOCUMENT CONTAINS PROPRIETARY INFORMATION WITH ALL RIGHTS & TITLES RESERVED AND MAY NOT BE REPRODUCED IN WHOLE OR IN PART WITHOUT THE WRITTEN CONSENT OF EAGLE CONTROL CORP.

EAGLE CONTROL CORP.
YAPHANK N.Y.

PROJECT:
LOCKHEED MARTIN CORPORATION
OPERABLE UNITS 1 and 2
ELECTRICAL UPGRADES

TITLE:
WELL EW-1R
REMOTE CONTROL PANEL
POWER WIRING SCHEMATIC

ENGINEER:	DRAWN:	SCALE:	DATE:
PKL	AS	NONE	10-28-2020

PROJECT:	DRAWING NO:	REV:
1026	D1026-15	1

CONTINUED FROM D1026-15

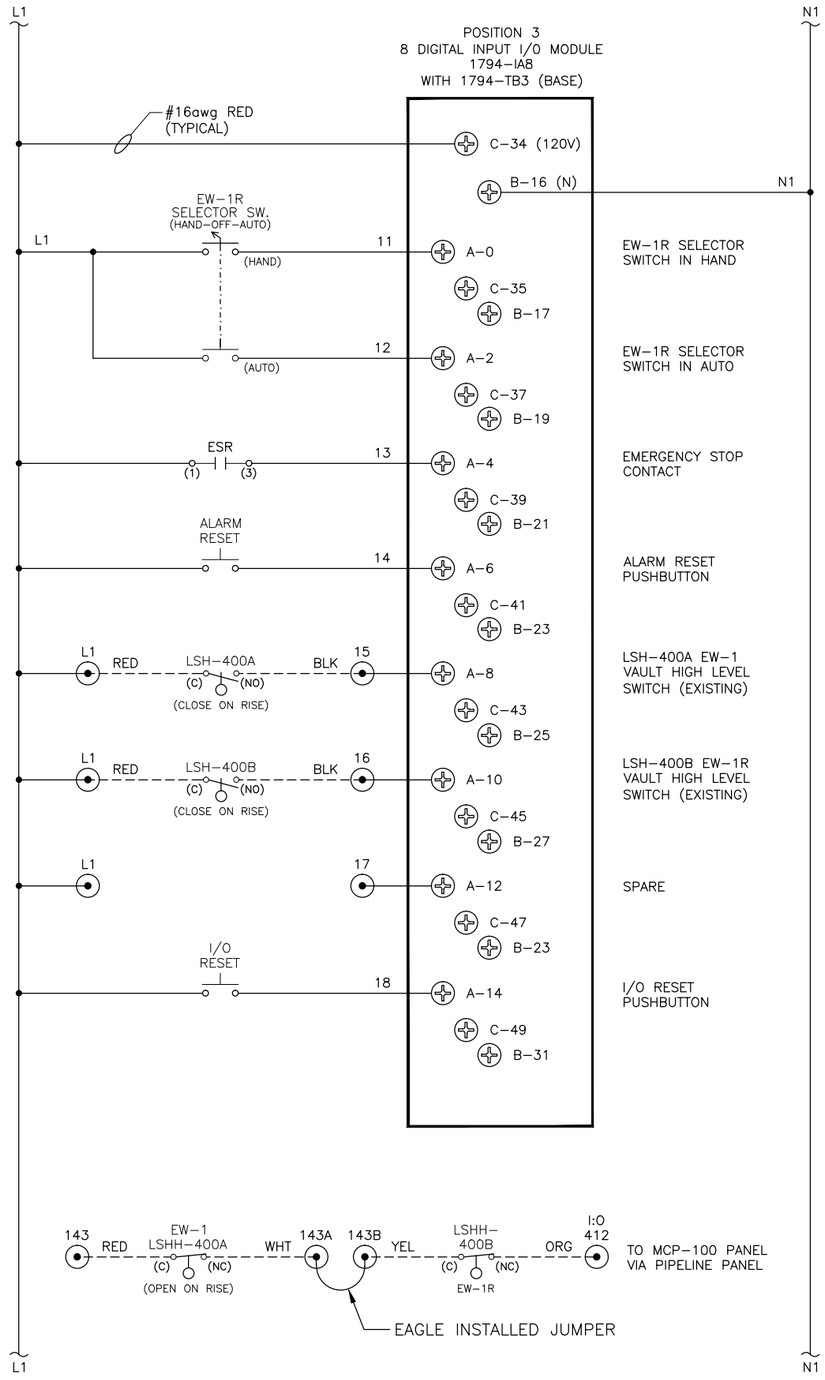

CONTINUED ABOVE RIGHT

CONTINUED FROM BELOW LEFT

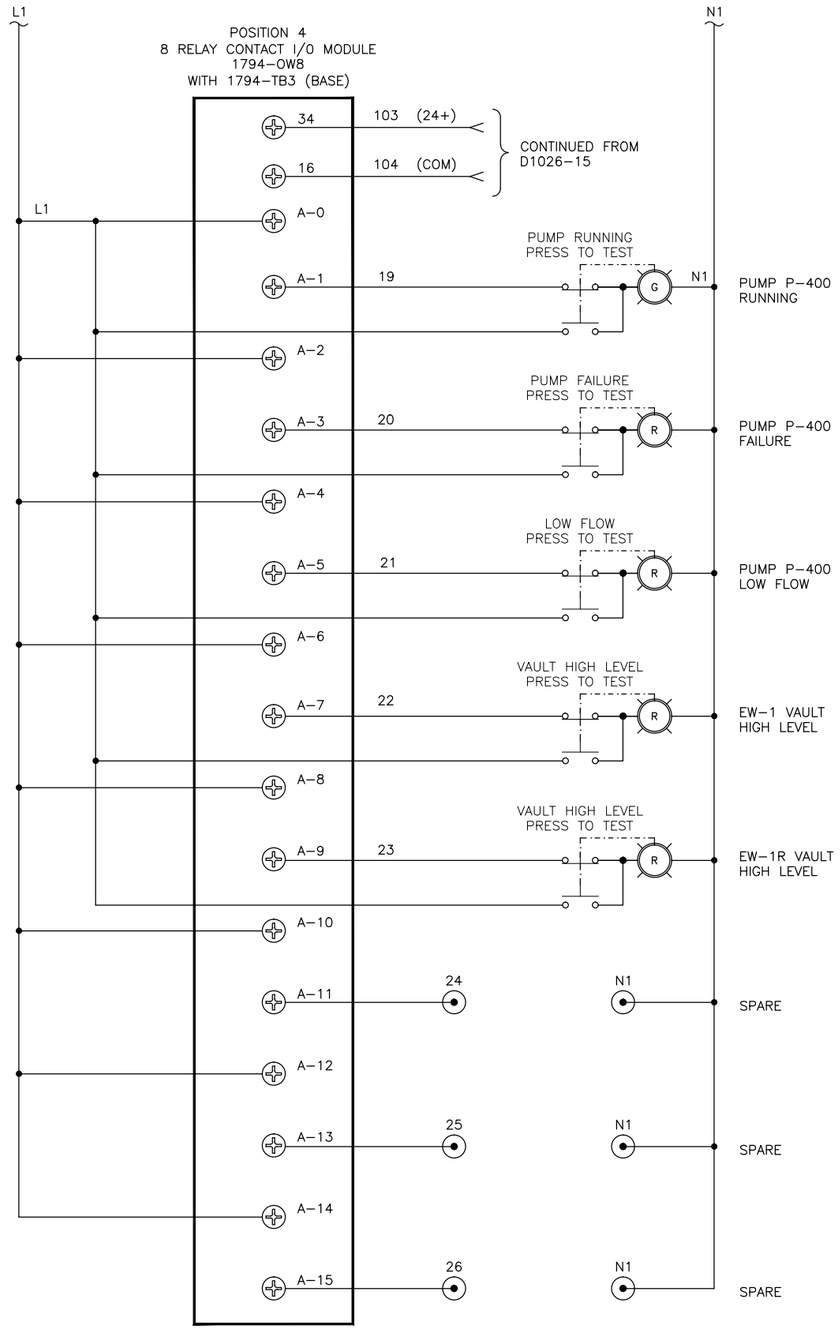

GENERAL LEGEND

- = EAGLE TERMINAL BLOCK
- = MCC TERMINAL BLOCK
- = INSTRUMENT TERMINAL BLOCK
- = FIELD WIRING
- = MECHANICAL CONNECTION
- = NO WIRING CONNECTION
- = WIRING CONNECTION

NOTES:

REV	DATE	DRWN	DESCRIPTION	APP'D
1	3/21	AS	AS BUILT	PKL

REVISIONS

REFERENCE DRAWINGS
D1026-13
THRU
D1026-18

THIS DOCUMENT CONTAINS PROPRIETARY INFORMATION WITH ALL RIGHTS & TITLES RESERVED AND MAY NOT BE REPRODUCED IN WHOLE OR IN PART WITHOUT THE WRITTEN CONSENT OF EAGLE CONTROL CORP.

EAGLE CONTROL CORP.
YAPHANK N.Y.

PROJECT:
LOCKHEED MARTIN CORPORATION
OPERABLE UNITS 1 and 2
ELECTRICAL UPGRADES

TITLE:
WELL EW-1R
REMOTE CONTROL PANEL
DIGITAL INPUT and RELAY OUTPUT
WIRING SCHEMATIC

ENGINEER:	DRAWN:	SCALE:	DATE:
PKL	AS	NONE	10-28-2020

PROJECT:	DRAWING NO:	REV:
1026	D1026-16	1

CONTINUED FROM D1026-15

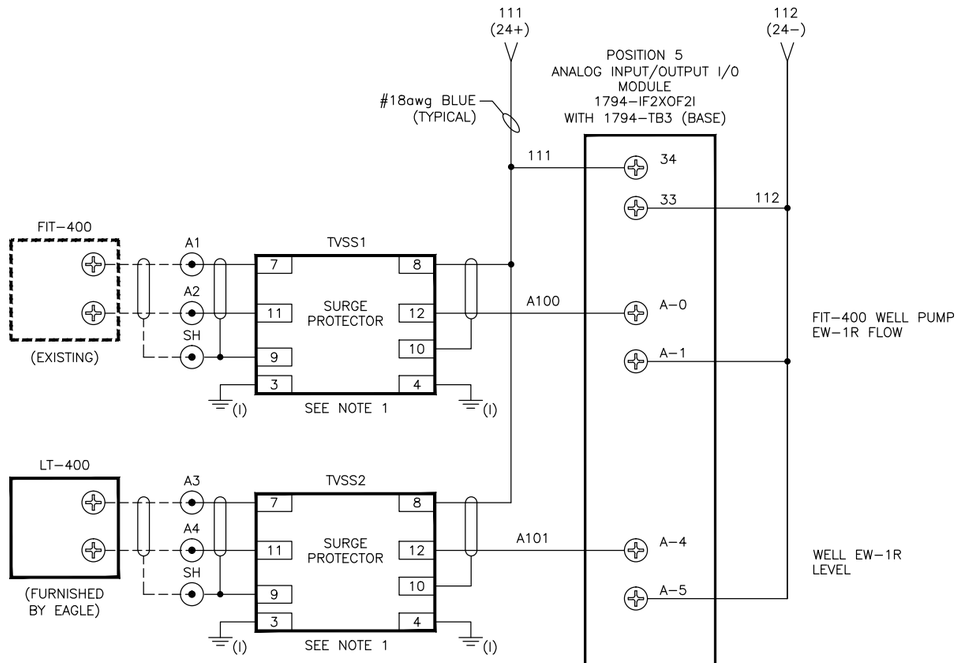

GENERAL LEGEND

- = EAGLE TERMINAL BLOCK
- = MCC TERMINAL BLOCK
- = INSTRUMENT TERMINAL BLOCK
- = FIELD WIRING
- = MECHANICAL CONNECTION
- = NO WIRING CONNECTION
- = WIRING CONNECTION

NOTES:

1. RUN GROUNDS ON TVSS's SEPARATELY TO INSTRUMENT GROUND BAR (DO NOT DAISY CHAIN) (I)

REV	DATE	DRWN	DESCRIPTION	APP'D
1	3/21	AS	AS BUILT	PKL

REVISIONS

REFERENCE DRAWINGS
D1026-13
THRU
D1026-18

THIS DOCUMENT CONTAINS PROPRIETARY INFORMATION WITH ALL RIGHTS & TITLES RESERVED AND MAY NOT BE REPRODUCED IN WHOLE OR IN PART WITHOUT THE WRITTEN CONSENT OF EAGLE CONTROL CORP.

EAGLE CONTROL CORP.
YAPHANK N.Y.

PROJECT:
LOCKHEED MARTIN CORPORATION
OPERABLE UNITS 1 and 2
ELECTRICAL UPGRADES

TITLE:
WELL EW-1R
REMOTE CONTROL PANEL
ANALOG I/O WIRING SCHEMATIC

ENGINEER:	DRAWN:	SCALE:	DATE:
PKL	AS	NONE	10-28-2020

PROJECT:	DRAWING NO:	REV:
1026	D1026-17	1

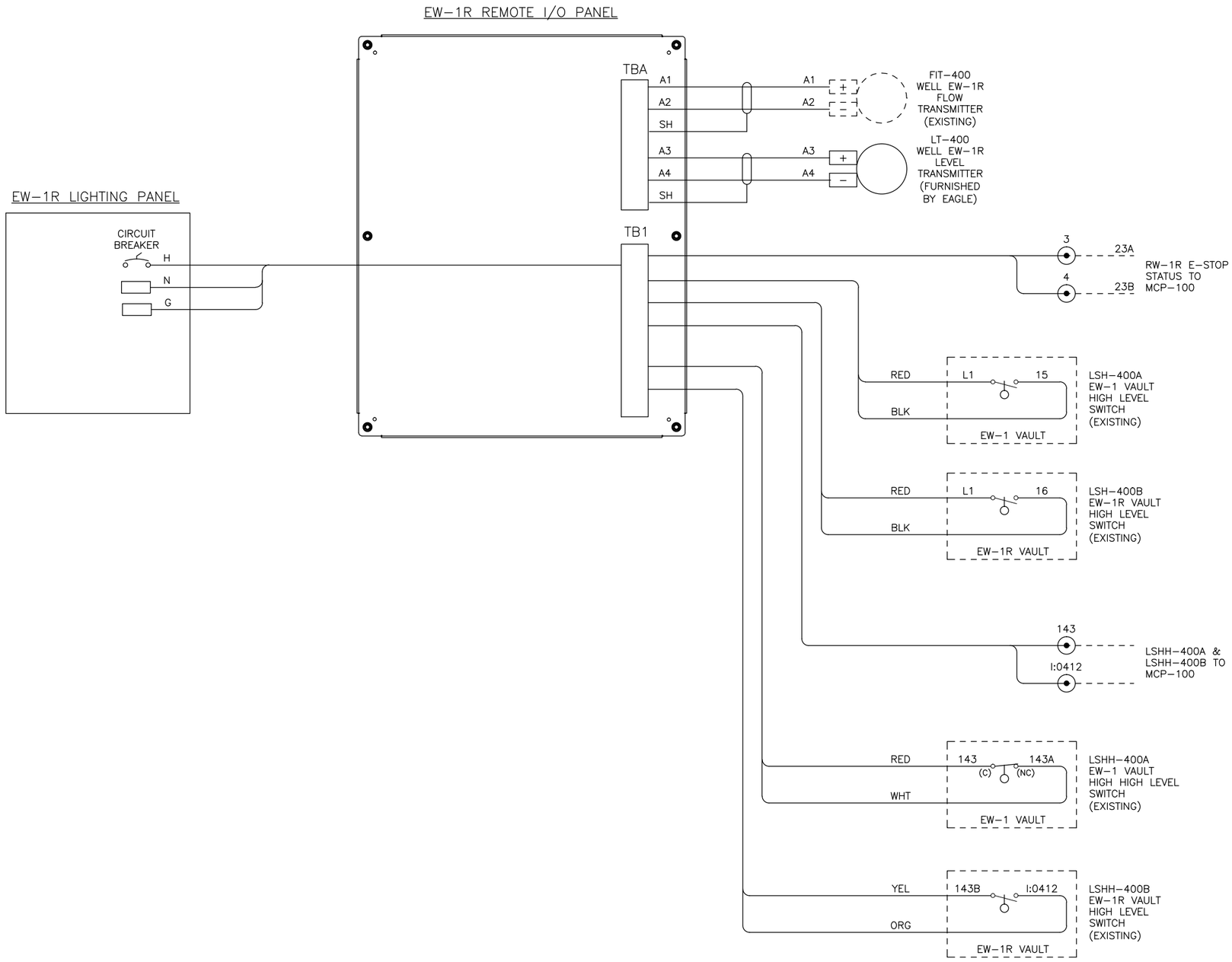

GENERAL LEGEND

= EAGLE TERMINAL BLOCK

= MCC TERMINAL BLOCK

= INSTRUMENT TERMINAL BLOCK

= FIELD WIRING

= MECHANICAL CONNECTION

= NO WIRING CONNECTION

= WIRING CONNECTION

NOTES:

1. RUN GROUNDS ON TVSS's SEPARATELY TO INSTRUMENT GROUND BAR (DO NOT DAISY CHAIN) (I)

REV	DATE	DRWN	DESCRIPTION	APP'D
1	3/21	AS	AS BUILT	PKL

REVISIONS

REFERENCE DRAWINGS
D1026-13
THRU
D1026-18

THIS DOCUMENT CONTAINS PROPRIETARY INFORMATION WITH ALL RIGHTS & TITLES RESERVED AND MAY NOT BE REPRODUCED IN WHOLE OR IN PART WITHOUT THE WRITTEN CONSENT OF EAGLE CONTROL CORP.

EAGLE CONTROL CORP.
YAPHANK N.Y.

PROJECT:
LOCKHEED MARTIN CORPORATION
OPERABLE UNITS 1 and 2
ELECTRICAL UPGRADES

TITLE:
WELL EW-1R
REMOTE CONTROL PANEL
INTERCONNECTION WIRING DIAGRAM

ENGINEER:	DRAWN:	SCALE:	DATE:
PKL	AS	NONE	10-28-2020

PROJECT:	DRAWING NO:	REV:
1026	D1026-18	1

NOTE: REPLACE EXISTING ETHERNET SWITCH AND MEDIA CONVERTERS WITH NEW MANAGED ETHERNET SWITCH.

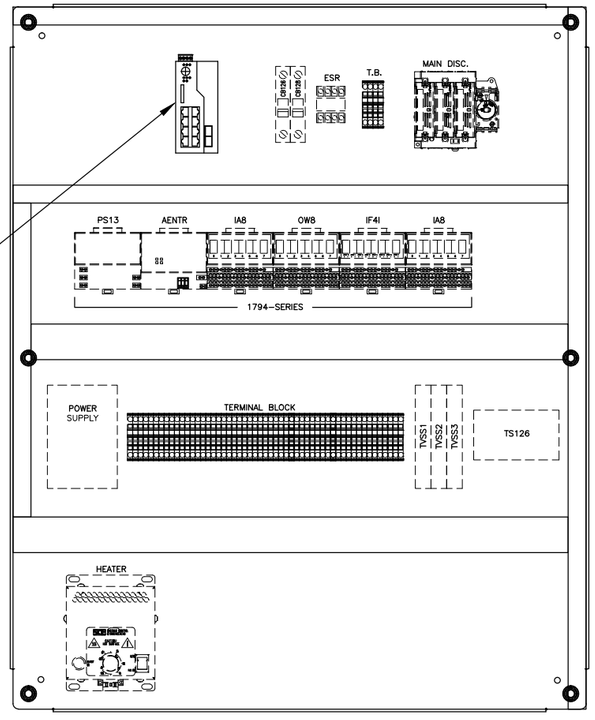

SUB PANEL ARRANGEMENT

SCALE 1/4" = 1"

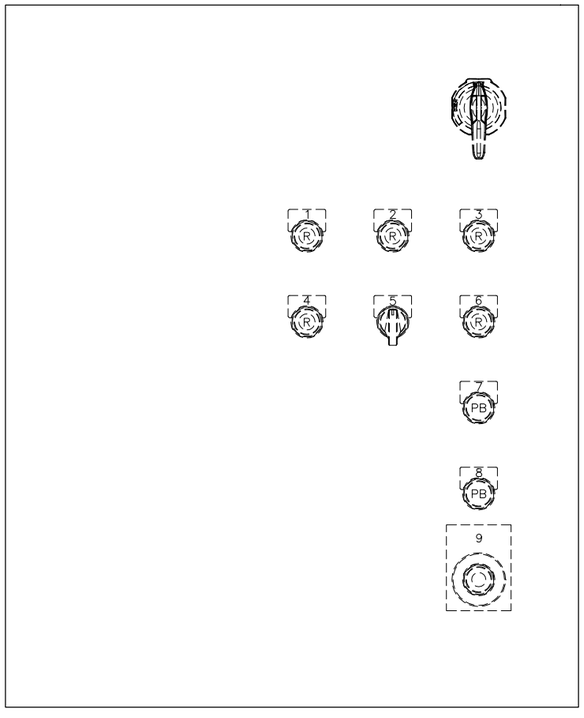

DEAD FRONT PANEL ARRANGEMENT

SCALE 1/4" = 1"

GENERAL LEGEND

- = EAGLE TERMINAL BLOCK
- = MCC TERMINAL BLOCK
- = INSTRUMENT TERMINAL BLOCK
- = FIELD WIRING
- = MECHANICAL CONNECTION
- = NO WIRING CONNECTION
- = WIRING CONNECTION

NOTES:

REV	DATE	DRWN	DESCRIPTION	APP'D
S1	1/21	AS	NO CHANGES TO THIS SHEET	PKL

REVISIONS

REFERENCE DRAWINGS
D1026-19
THRU
D1026-20

THIS DOCUMENT CONTAINS PROPRIETARY INFORMATION WITH ALL RIGHTS & TITLES RESERVED AND MAY NOT BE REPRODUCED IN WHOLE OR IN PART WITHOUT THE WRITTEN CONSENT OF EAGLE CONTROL CORP.

EAGLE CONTROL CORP.
YAPHANK N.Y.

PROJECT:
LOCKHEED MARTIN CORPORATION
OPERABLE UNITS 1 and 2
ELECTRICAL UPGRADES

TITLE:
WELL RW-3
REMOTE CONTROL PANEL
PANEL ARRANGEMENT MODIFICATIONS

ENGINEER:	DRAWN:	SCALE:	DATE:
PKL	AS	NONE	10-28-2020

PROJECT:	DRAWING NO:	REV:
1026	D1026-19	S1

FROM RW-3 STARTER PANEL FROM SURGE PROTECTOR
LINE IN 120VAC/1ø/60HZ/20A

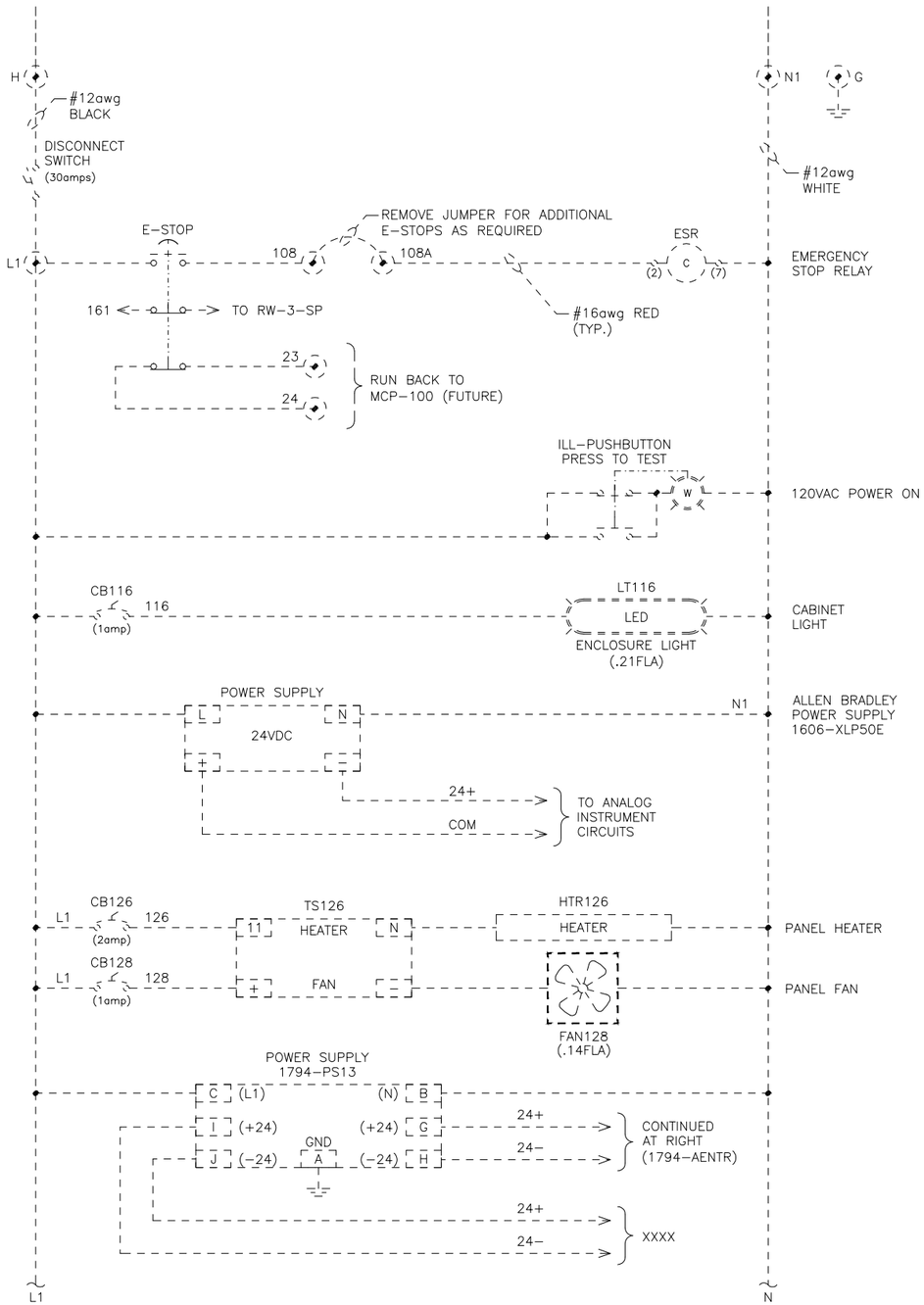

CONTINUED FROM BELOW LEFT

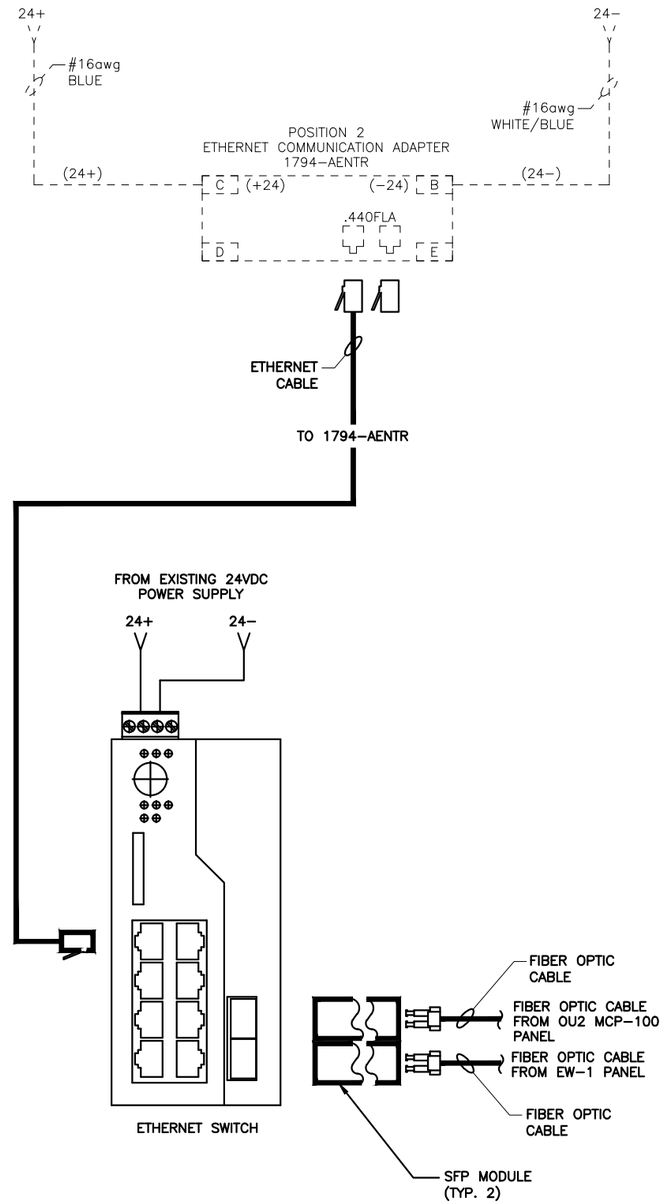

GENERAL LEGEND

- = EAGLE TERMINAL BLOCK
- = MCC TERMINAL BLOCK
- = INSTRUMENT TERMINAL BLOCK
- = FIELD WIRING
- = MECHANICAL CONNECTION
- = NO WIRING CONNECTION
- = WIRING CONNECTION

NOTES:

REV	DATE	DRWN	DESCRIPTION	APP'D
S1	1/21	AS	NO CHANGES ON THIS SHEET	PKL

REVISIONS

REFERENCE DRAWINGS
D1026-19
THRU
D1026-20

THIS DOCUMENT CONTAINS PROPRIETARY INFORMATION WITH ALL RIGHTS & TITLES RESERVED AND MAY NOT BE REPRODUCED IN WHOLE OR IN PART WITHOUT THE WRITTEN CONSENT OF EAGLE CONTROL CORP.

EAGLE CONTROL CORP.
YAPHANK N.Y.

PROJECT:
LOCKHEED MARTIN CORPORATION
OPERABLE UNITS 1 and 2
ELECTRICAL UPGRADES

TITLE:
WELL RW-3
REMOTE CONTROL PANEL
POWER WIRING SCHEMATIC MODIFICATIONS

ENGINEER:	DRAWN:	SCALE:	DATE:
PKL	AS	NONE	10-28-2020

PROJECT:	DRAWING NO:	REV:
1026	D1026-20	S1

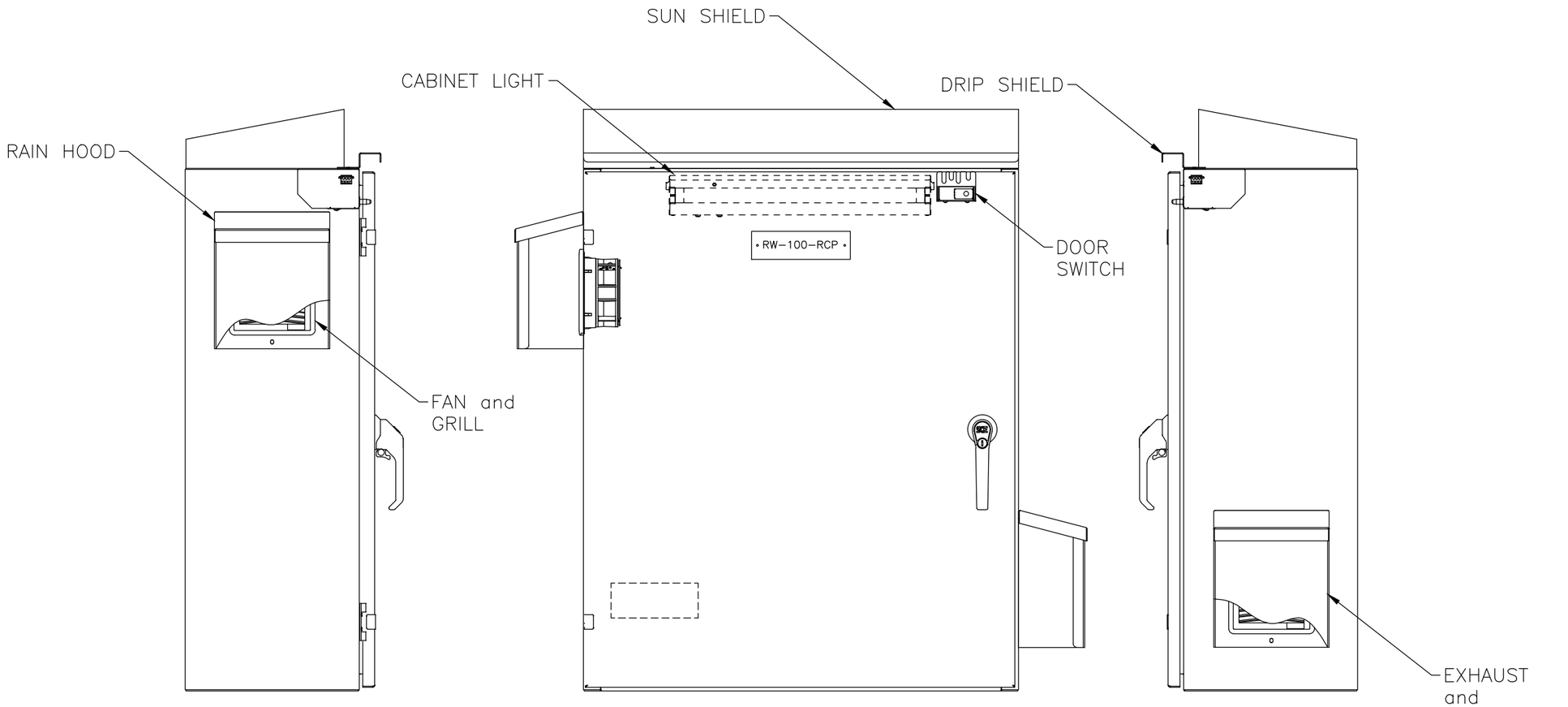

LEFT SIDE VIEW

SCALE 1/4" = 1"

FRONT PANEL ARRANGEMENT

SCALE 1/4" = 1"

RIGHT SIDE VIEW

SCALE 1/4" = 1"

NAMEPLATE DETAIL "A"

EAGLE CONTROL CORPORATION
23 OLD DOCK ROAD
YAPHANK, NY 11980
TEL: (631)924-1315

WELL RW-100
REMOTE CONTROL PANEL
EAGLE ORDER No. 1026

(NO SCALE)

GENERAL LEGEND

- = EAGLE TERMINAL BLOCK
- = MCC TERMINAL BLOCK
- = INSTRUMENT TERMINAL BLOCK
- = FIELD WIRING
- = MECHANICAL CONNECTION
- = NO WIRING CONNECTION
- = WIRING CONNECTION

NOTES:

REV	DATE	DRWN	DESCRIPTION	APP'D
2	5/21	AS	ADDED START-UP FIELD NOTES	PKL
1	4/21	AS	AS BUILT	PKL

REVISIONS

REFERENCE DRAWINGS
D1026-21
THRU
D1026-30

THIS DOCUMENT CONTAINS PROPRIETARY INFORMATION WITH ALL RIGHTS & TITLES RESERVED AND MAY NOT BE REPRODUCED IN WHOLE OR IN PART WITHOUT THE WRITTEN CONSENT OF EAGLE CONTROL CORP.

EAGLE CONTROL CORP.
YAPHANK N.Y.

PROJECT:
LOCKHEED MARTIN CORPORATION
OPERABLE UNITS 1 and 2
ELECTRICAL UPGRADES

TITLE:
WELL RW-100
REMOTE CONTROL PANEL
PANEL ARRANGEMENT

ENGINEER:	DRAWN:	SCALE:	DATE:
PKL	AS	NONE	10-28-2020

PROJECT:	DRAWING NO:	REV:
1026	D1026-21	2

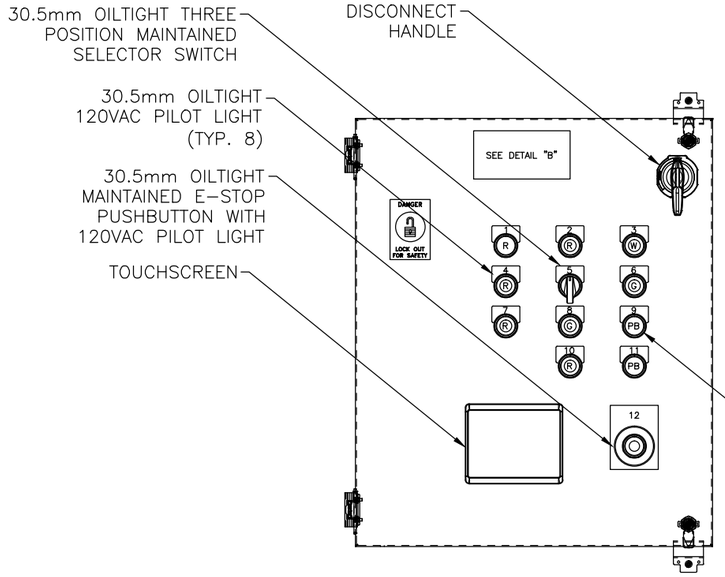

DEAD FRONT PANEL ARRANGEMENT

SCALE 3/16" = 1"

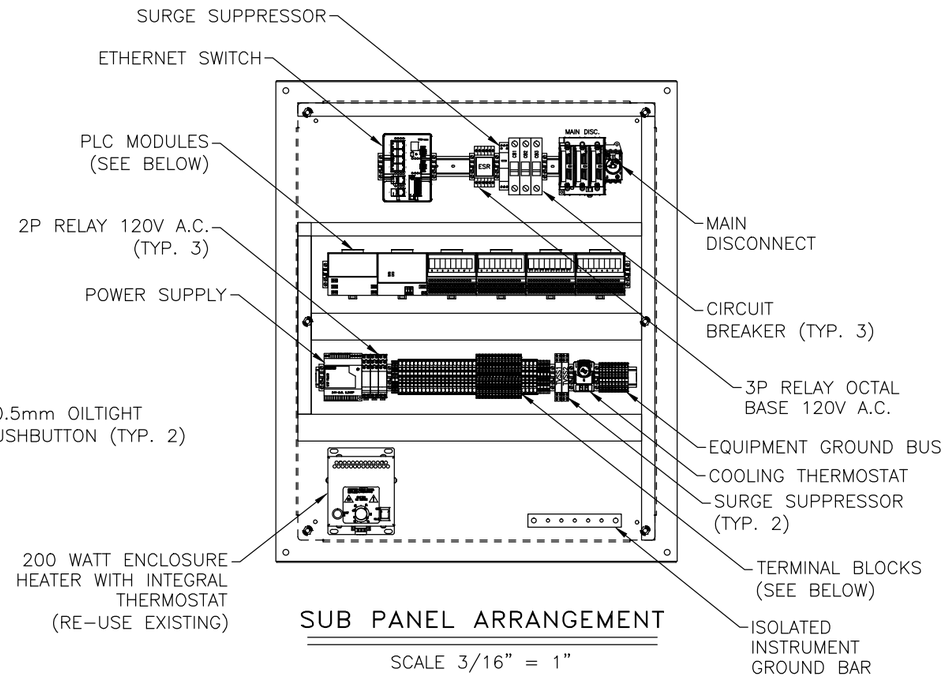

SUB PANEL ARRANGEMENT

SCALE 3/16" = 1"

NAMEPLATE SCHEDULE

NP #	QTY	NAMEPLATE INSCRIPTION	SIZE / (LENS)	NP #	QTY	NAMEPLATE INSCRIPTION	SIZE / (LENS)
1	1	VAULT HIGH LEVEL	30.5mm	7	1	LOW FLOW	30.5mm
2	1	VAULT HIGH HIGH LEVEL	30.5mm	8	1	TREATMENT SYSTEM NORMAL OPERATION	30.5mm
3	1	120VAC POWER	30.5mm	9	1	ALARM RESET	30.5mm
4	1	PUMP VFD FAILURE	30.5mm	10	1	TREATMENT SYSTEM NOT READY	30.5mm
5	1	HAND – OFF – AUTO	30.5mm	11	1	I/O RESET	30.5mm
6	1	PUMP VFD RUNNING	30.5mm	12	1	PUSH TO STOP – PULL TO START	2.5"H x 2.5"W

PLC MODULE DETAIL

POS. #	MODULE
1	POWER SUPPLY
2	ETHERNET COMMUNICATION ADAPTER
3	16 DIGITAL INPUTS
4	8 ISOLATED N.O. RELAY CONTACTS
5	4 ANALOG INPUTS, 24VDC
6	4 ANALOG OUTPUTS, 24VDC

TERMINAL BLOCK LAYOUT

		H	N	G	1	2	3	4	5	6	8	9	12	13	15	16	17	18	19	20	21	22	PR2	NPS54	34	35	36	38	40	41	42	43	44	45	46	N	N	61	62	63	64	65	66	A1	A3	SP	SP	G	G	G	G	G	G	G	G
–	–																								L1	L1	L1	L1	L1	L1	L1	L1	L1	L1	L1	L1	61	62					A2	A4	SP	SP								
																																												SH	SH	SP	SP								

NAMEPLATE DETAIL "B"

CONTROL PANEL ELECTRICAL DATA

LINE VOLTAGE	120VAC/1PH, 60HZ
FLA	10
PRIMARY FUSING	20A, CB
SCCR	5KA

(NO SCALE – 2"H x 4"W)

GENERAL LEGEND

- = EAGLE TERMINAL BLOCK
- = MCC TERMINAL BLOCK
- = INSTRUMENT TERMINAL BLOCK
- = FIELD WIRING
- = MECHANICAL CONNECTION
- = NO WIRING CONNECTION
- = WIRING CONNECTION

NOTES:

REV	DATE	DRWN	DESCRIPTION	APP'D
2	5/21	AS	ADDED START-UP FIELD NOTES	PKL
1	4/21	AS	AS BUILT	PKL

REVISIONS

REFERENCE DRAWINGS
D1026-21
THRU
D1026-30

THIS DOCUMENT CONTAINS PROPRIETARY INFORMATION WITH ALL RIGHTS & TITLES RESERVED AND MAY NOT BE REPRODUCED IN WHOLE OR IN PART WITHOUT THE WRITTEN CONSENT OF EAGLE CONTROL CORP.

EAGLE CONTROL CORP.
YAPHANK N.Y.

PROJECT:
LOCKHEED MARTIN CORPORATION
OPERABLE UNITS 1 and 2
ELECTRICAL UPGRADES

TITLE:
WELL RW-100
REMOTE CONTROL PANEL
PANEL ARRANGEMENT

ENGINEER:	DRAWN:	SCALE:	DATE:
PKL	AS	NONE	10-28-2020

PROJECT:	DRAWING NO:	REV:
1026	D1026-22	2

LOCKHEED MARTIN CORPORATION
OPERABLE UNITS 1 & 2 ELECTRICAL UPGRADES

REMOTE I/O PANEL BILL OF MATERIALS

ITEM No.	QTY.	MANUFACTURER	PART NUMBER	DESCRIPTION	U.L. FILE No.	U.L. CCN
1	1	SAGINAW	SCE-36EL3012SS6LPPL	36"H x 30"W x 12"D ENCLOSURE	E69392	NITW
2	1	SAGINAW	SCE-36P30	SUB-PANEL	E69392	NITW
3	1	SAGINAW	SCE-ELMFK4SS6-OS	MOUNTING FEET	E69392	NITW
4	1	SAGINAW	SCE-DF36EL30LP	DEAD FRONT	E69392	NITW
5	1	SAGINAW	SCE-XXXXX	SUN SHIELD	E69392	NITW
6	1	SAGINAW	SCE-TEMNO	THERMOSTAT	E358386	NITW2
7	1	SAGINAW	SCE-N12FA44	FAN	E358386	NITW2
8	1	SAGINAW	SCE-N12FGA44	EXHAUST GRILL	E358386	NITW2
9	2	SAGINAW	SCE-RH4N12SS	RAIN HOOD	E69392	NITW
10	1	SAGINAW	SCE-LF18NO	LIGHT	E358386	NITW2
11	1	SAGINAW	SCE-DS30SS6	DRIP SHIELD	E69392	NITW
12	1	SAGINAW	SCE-HF2001A	120VAC, 200W, HEATER WITH BUILT IN THERMOSTAT	E358386	NITW2
13	1	SAGINAW	SCE-LSA	DOOR SWITCH	E358386	NITW2
14	1	ALLEN BRADLEY	194R-N30-1753	30A, NON FUSED DISCONNECT	E14841	NLRV
15	1	ALLEN BRADLEY	194R-S1	12" SHAFT	E14841	NLRV
16	1	ALLEN BRADLEY	194R-PY	RED/YELLOW HANDLE	E14841	NLRV
17	1	SCHNEIDER ELECTRIC	M9F21101	5A CIRCUIT BREAKER	E90509	QVNU2
18	1	SCHNEIDER ELECTRIC	M9F21105	10A CIRCUIT BREAKER	E90509	QVNU2
19	1	SCHNEIDER ELECTRIC	M9F21110	3A CIRCUIT BREAKER	E90509	QVNU2
20	1	EATON/CUTLER-HAMMER	E34TPB120LWG2A	30mm LED PILOT LIGHT - WHITE	E1230	NKCR
21	2	EATON/CUTLER-HAMMER	E34TPB120LGG2A	30mm LED PILOT LIGHT - GREEN	E1230	NKCR
22	5	EATON/CUTLER-HAMMER	E34PB120LRG2A	30mm LED PILOT LIGHT - RED	E1230	NKCR
23	1	EATON/CUTLER-HAMMER	E34VHBL1-2X	30mm 3-POSITION SWITCH	E1230	NKCR
24	2	EATON/CUTLER-HAMMER	E34PB1-53X	30mm PUSHBUTTON	E1230	NKCR
25	1	EATON/CUTLER-HAMMER	E34GDB63LED120-1X	30mm EMERGENCY STOP PUSHBUTTON	E1230	NKCR
26	2	FINDER	46.52.8.120.0054	2-POLE RELAY, 120VAC COIL, (2) FORM C	E106390	NRNT2
27	3	FINDER	97.02	2-POLE RELAY SOCKET FOR 46 SERIES	E140923	SWIV
28	1	FINDER	60.13.8.120.0050	3-POLE RELAY, 120VAC COIL, (2) FORM C	E106390	NRNT2
29	1	FINDER	90.03	3-POLE RELAY SOCKET FOR 60 SERIES	E140923	SWIV
30	1	FINDER	46.52.9.24.0074	2-POLE RELAY, 24VDC COIL, (2) FORM C	E106390	NRNT2
31	1	PHOENIX CONTACT	2868651 STEP-PS/1AC/24DC/2.5	2.4 AMP POWER SUPPLY	E214596	QQGQ
32	1	ALLEN-BRADLEY	1794-PS13	POWER SUPPLY	E65584	NRAQ2
33	1	ALLEN-BRADLEY	1794-AENTR	ETHERNET COMMUNICATION ADAPTER	E65584	NRAQ2
34	1	ALLEN-BRADLEY	1794-IA16	120VAC INPUT MODULE, 16 PT	E65584	NRAQ2

GENERAL LEGEND

= EAGLE TERMINAL BLOCK
= MCC TERMINAL BLOCK
= INSTRUMENT TERMINAL BLOCK
= FIELD WIRING
= MECHANICAL CONNECTION
= NO WIRING CONNECTION
= WIRING CONNECTION

NOTES:

REV	DATE	DRWN	DESCRIPTION	APP'D
2	5/21	AS	ADDED START-UP FIELD NOTES	PKL
1	4/21	AS	AS BUILT	PKL

REVISIONS

REFERENCE DRAWINGS
D1026-21
THRU
D1026-30

THIS DOCUMENT CONTAINS PROPRIETARY INFORMATION WITH ALL RIGHTS & TITLES RESERVED AND MAY NOT BE REPRODUCED IN WHOLE OR IN PART WITHOUT THE WRITTEN CONSENT OF EAGLE CONTROL CORP.

EAGLE CONTROL CORP.
YAPHANK N.Y.

PROJECT:
LOCKHEED MARTIN CORPORATION
OPERABLE UNITS 1 and 2
ELECTRICAL UPGRADES

TITLE:
WELL RW-100
REMOTE CONTROL PANEL
BILL of MATERIALS

ENGINEER:	DRAWN:	SCALE:	DATE:
PKL	AS	NONE	10-28-2020

PROJECT NO:	DRAWING NO:	REV:
1026	D1026-23	2

LOCKHEED MARTIN CORPORATION
OPERABLE UNITS 1 & 2 ELECTRICAL UPGRADES

REMOTE I/O PANEL BILL OF MATERIALS

ITEM No.	QTY.	MANUFACTURER	PART NUMBER	DESCRIPTION	U.L. FILE No.	U.L. CCN
35	1	ALLEN–BRADLEY	1794–OW8	RELAY OUTPUT MODULE, 8 PT	E65584	NRAQ2
36	1	ALLEN–BRADLEY	1794–IF4I	ANALOG INPUT MODULE, 4 PT	E65584	NRAQ2
37	1	ALLEN–BRADLEY	1794–OF4I	ANALOG OUTPUT MODULE, 4 PT	E65584	NRAQ2
38	4	ALLEN–BRADLEY	1794–TB3	TERMINAL BASE	E65584	NRAQ2
39	1	ALLEN–BRADLEY	2713P–T6CD1	PANELVIEW 5310 HMI, 6 INCH	61010–1	NRAQ2
40	X	MERSEN	GDL2	UL GLASS FUSE, 2A	E33925	JDYX
41	X	MERSEN	GDL4	UL GLASS FUSE, 4A	E33925	JDYX
42	2	PHOENIX CONTACT	2801512 (PT–IQ–1X2–EX–24DC–UT)	SURGE SUPPRESSOR FOR 4–20mA LOOPS	E138168	QVGQ
43	2	PHOENIX CONTACT	2891081 (FL–SFP–FX)	FIBER TRANSCEIVER CARTRIDGE, 100 Mbit, MULTIMODE, LC CONNECTOR	–	–
44	1	PHOENIX CONTACT	2701554 (FL SWITCH 7006–2GC–EIP	8 PORT MANAGED ETHERNET SWITCH WITH 2 FIBER OPTIC PORTS	E140324	NKCR
45	1	PHOENIX CONTACT	2907918 (PLT–SEC–T3–120–FM–UT)	SURGE SUPPRESSOR	E330181	VZCA
46	2	PHOENIX CONTACT	3036385	FUSED TERMIINAL BLOCKS	E60425	XCFR2
47	26	PHOENIX CONTACT	3031364	TERMIINAL BLOCKS	E60425	XCFR2
48	12	PHOENIX CONTACT	2717139	ANALOG TERMINAL BLOCK W/GROUND	E60425	XCFR2
49	13	PHOENIX CONTACT	3031429	DOUBLE–LEVEL TERMINAL BLOCK	E60425	XCFR2

GENERAL LEGEND

= EAGLE TERMINAL BLOCK
= MCC TERMINAL BLOCK
= INSTRUMENT TERMINAL BLOCK
= FIELD WIRING
= MECHANICAL CONNECTION
= NO WIRING CONNECTION
= WIRING CONNECTION

NOTES:

REV	DATE	DRWN	DESCRIPTION	APP'D
2	5/21	AS	ADDED START–UP FIELD NOTES	PKL
1	4/21	AS	AS BUILT	PKL

REVISIONS

REFERENCE DRAWINGS
D1026–21
THRU
D1026–30

THIS DOCUMENT CONTAINS PROPRIETARY INFORMATION WITH ALL RIGHTS & TITLES RESERVED AND MAY NOT BE REPRODUCED IN WHOLE OR IN PART WITHOUT THE WRITTEN CONSENT OF EAGLE CONTROL CORP.

EAGLE CONTROL CORP.
YAPHANK N.Y.

PROJECT:
LOCKHEED MARTIN CORPORATION
OPERABLE UNITS 1 and 2
ELECTRICAL UPGRADES

TITLE:
WELL RW–100
REMOTE CONTROL PANEL
BILL of MATERIALS

ENGINEER:	DRAWN:	SCALE:	DATE:
PKL	AS	NONE	10–28–2020

PROJECT:	DRAWING NO:	REV:
1026	D1026–24	2

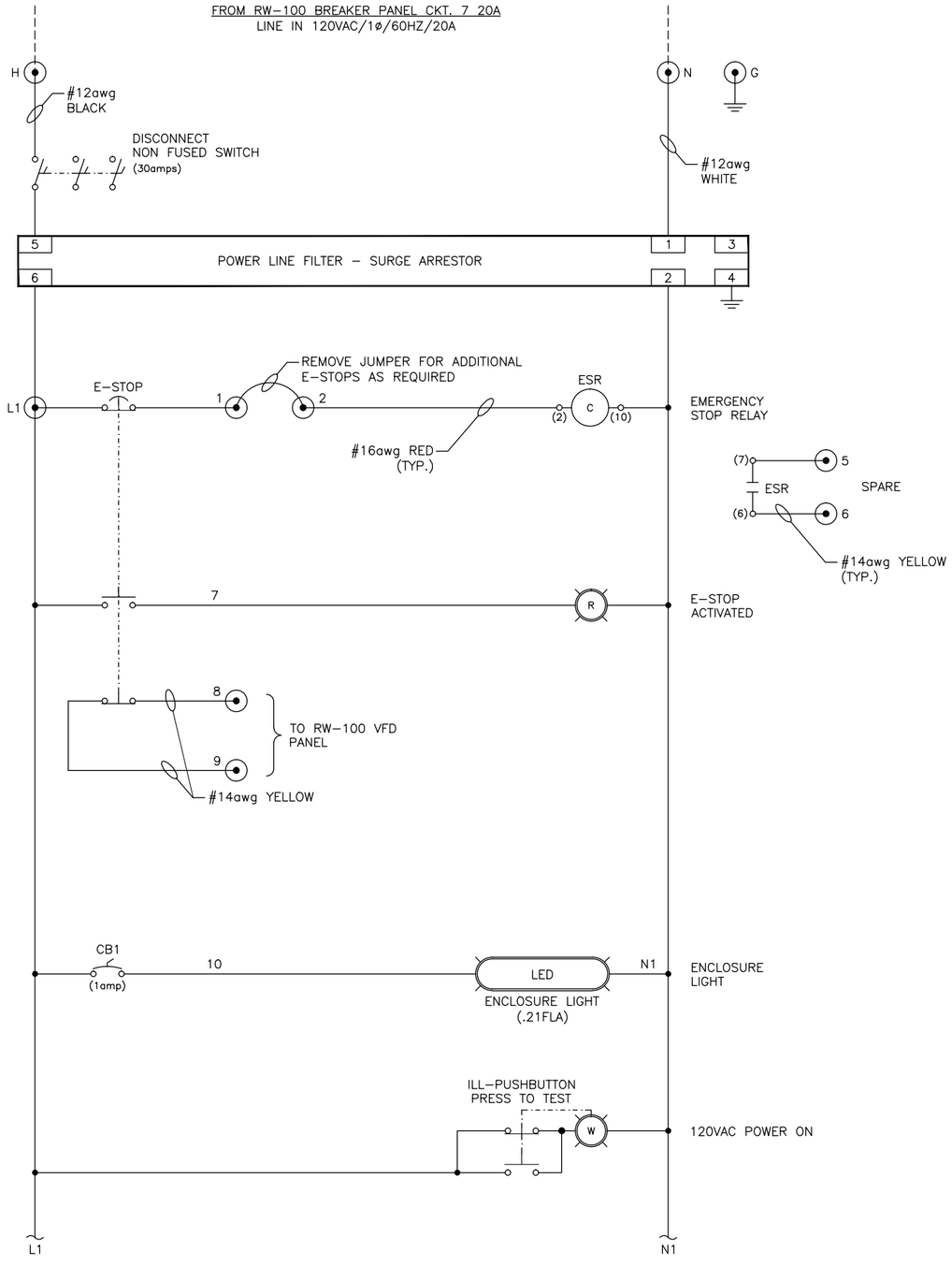

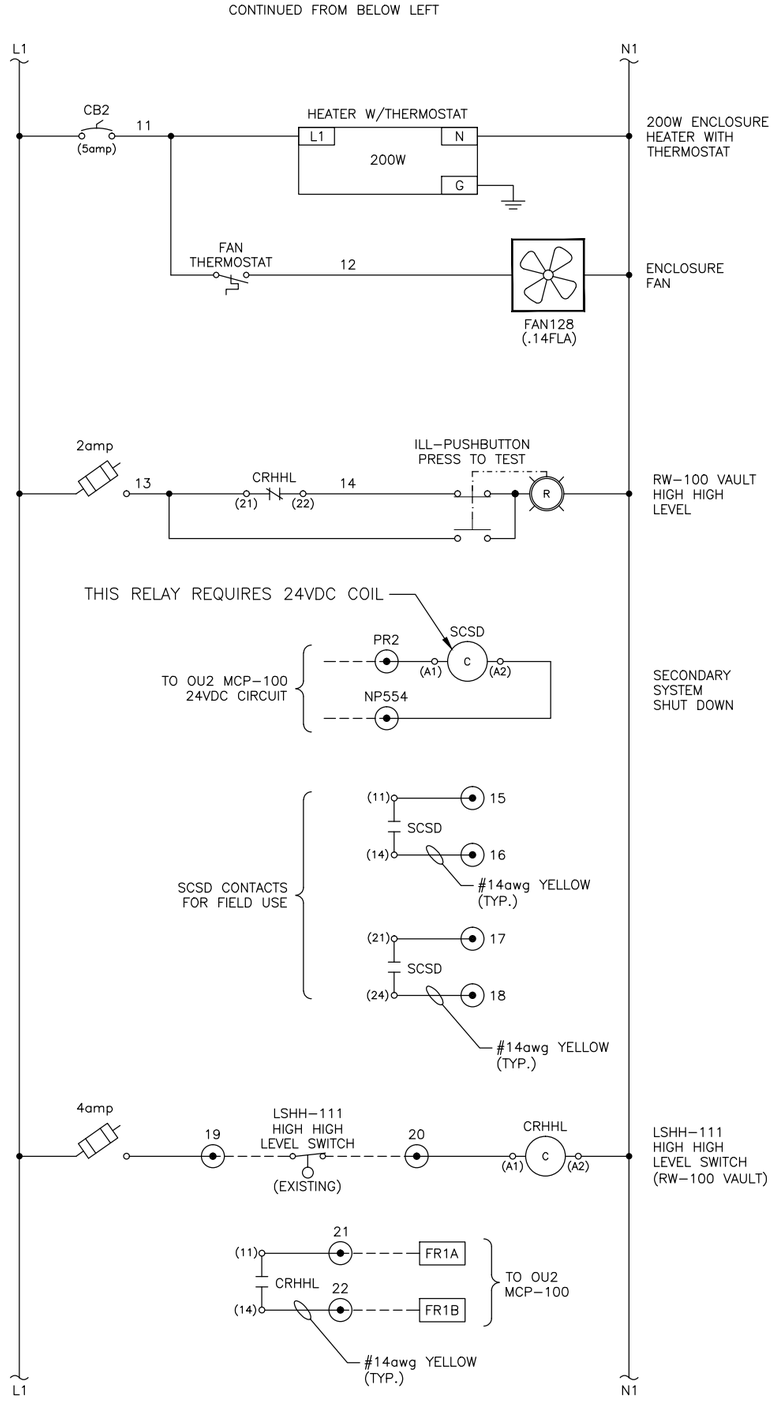

GENERAL LEGEND

- = EAGLE TERMINAL BLOCK
- = MCC TERMINAL BLOCK
- = INSTRUMENT TERMINAL BLOCK
- = FIELD WIRING
- = MECHANICAL CONNECTION
- = NO WIRING CONNECTION
- = WIRING CONNECTION

NOTES:

REV	DATE	DRWN	DESCRIPTION	APP'D
2	5/21	AS	ADDED START-UP FIELD NOTES	PKL
1	4/21	AS	AS BUILT	PKL

REVISIONS

REFERENCE DRAWINGS
D1026-21
THRU
D1026-30

THIS DOCUMENT CONTAINS PROPRIETARY INFORMATION WITH ALL RIGHTS & TITLES RESERVED AND MAY NOT BE REPRODUCED IN WHOLE OR IN PART WITHOUT THE WRITTEN CONSENT OF EAGLE CONTROL CORP.

EAGLE CONTROL CORP.
YAPHANK N.Y.

PROJECT:
LOCKHEED MARTIN CORPORATION
OPERABLE UNITS 1 and 2
ELECTRICAL UPGRADES

TITLE:
WELL RW-100
REMOTE CONTROL PANEL
POWER WIRING SCHEMATIC

ENGINEER:	DRAWN:	SCALE:	DATE:
PKL	AS	NONE	10-28-2020

PROJECT:	DRAWING NO:	REV:
1026	D1026-25	2

CONTINUED FROM D1026–25

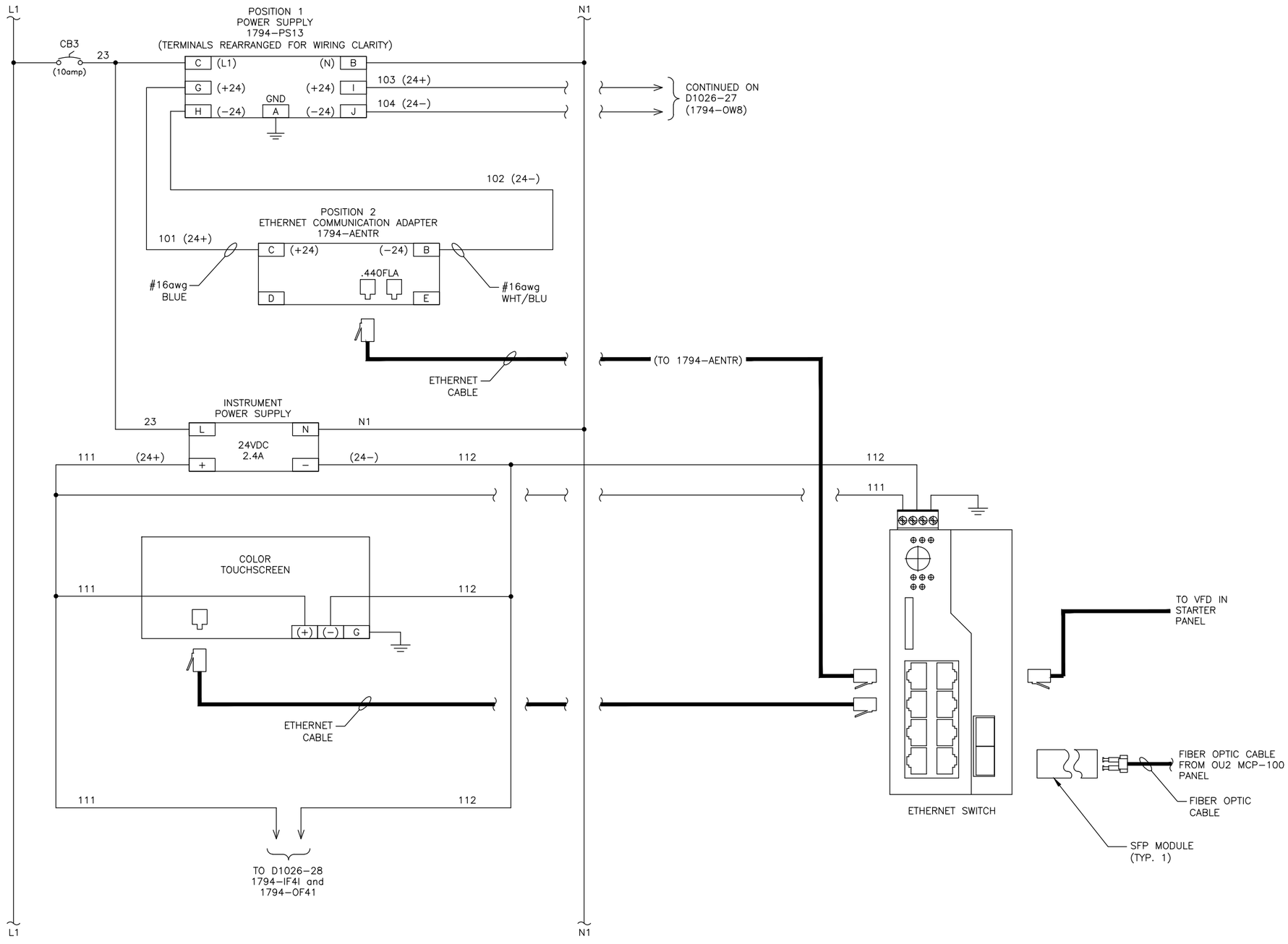

CONTINUED ON D1026–27

GENERAL LEGEND

- = EAGLE TERMINAL BLOCK
- = MCC TERMINAL BLOCK
- = INSTRUMENT TERMINAL BLOCK
- = FIELD WIRING
- = MECHANICAL CONNECTION
- = NO WIRING CONNECTION
- = WIRING CONNECTION

NOTES:

REV	DATE	DRWN	DESCRIPTION	APP'D
2	5/21	AS	ADDED START–UP FIELD NOTES	PKL
1	4/21	AS	AS BUILT	PKL

REVISIONS

REFERENCE DRAWINGS
D1026–21
THRU
D1026–30

THIS DOCUMENT CONTAINS PROPRIETARY INFORMATION WITH ALL RIGHTS & TITLES RESERVED AND MAY NOT BE REPRODUCED IN WHOLE OR IN PART WITHOUT THE WRITTEN CONSENT OF EAGLE CONTROL CORP.

EAGLE CONTROL CORP.
YAPHANK N.Y.

PROJECT:
LOCKHEED MARTIN CORPORATION
OPERABLE UNITS 1 and 2
ELECTRICAL UPGRADES

TITLE:
WELL RW–100
REMOTE CONTROL PANEL
POWER WIRING SCHEMATIC

ENGINEER:	DRAWN:	SCALE:	DATE:
PKL	AS	NONE	10–28–2020

PROJECT:	DRAWING NO:	REV:
1026	D1026–26	2

CONTINUED FROM D1026-26

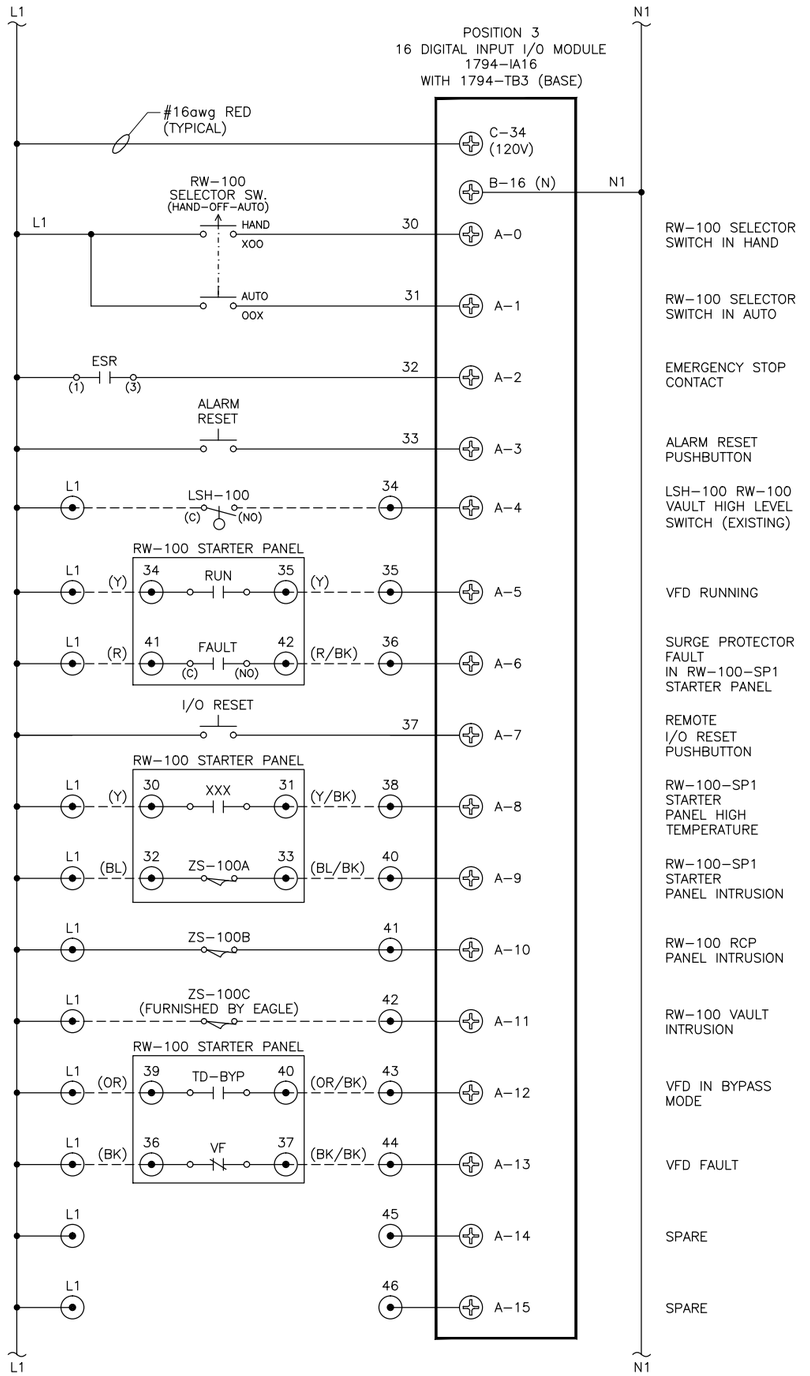

CONTINUED ABOVE RIGHT

CONTINUED FROM BELOW LEFT

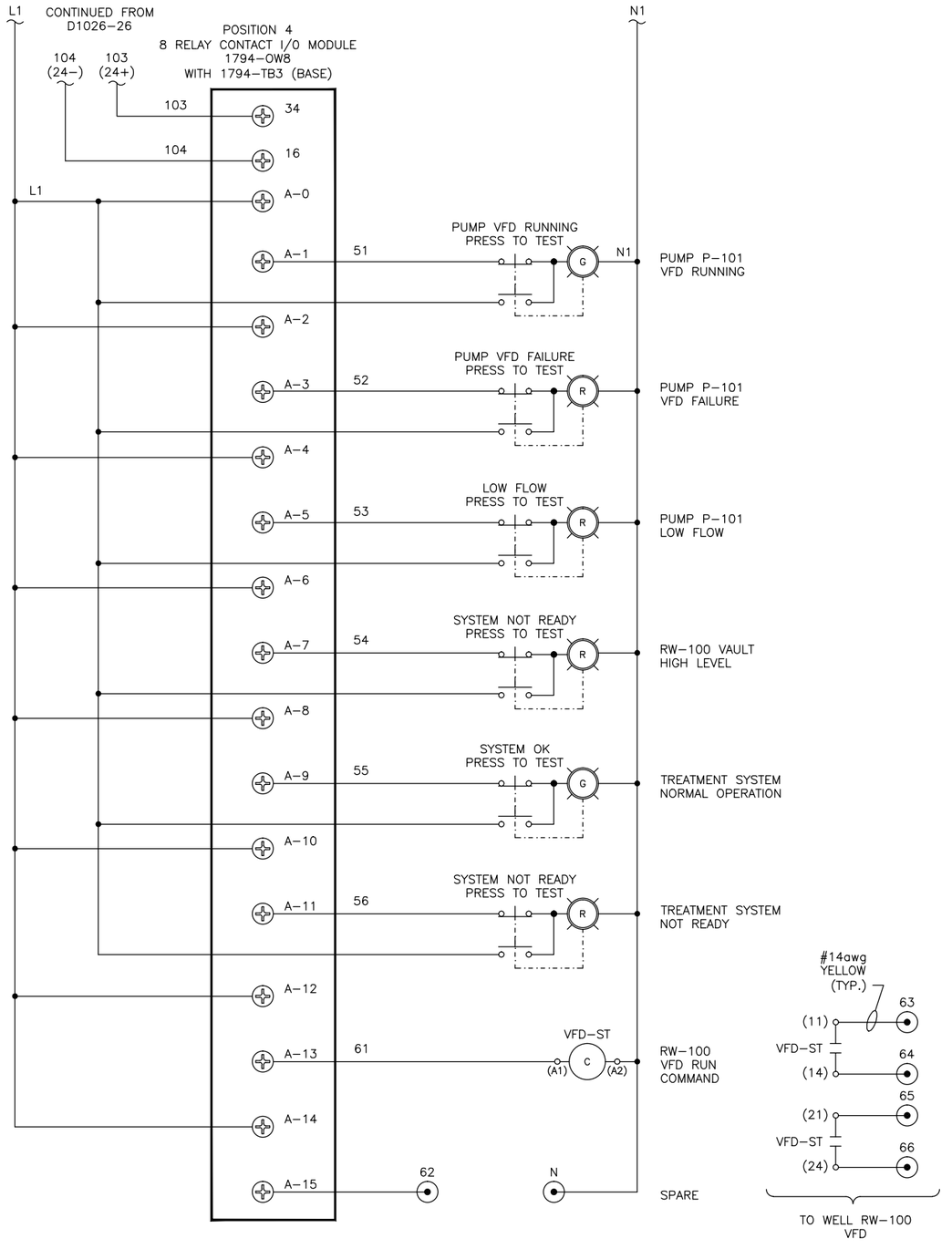

GENERAL LEGEND

- = EAGLE TERMINAL BLOCK
- = MCC TERMINAL BLOCK
- = INSTRUMENT TERMINAL BLOCK
- = FIELD WIRING
- = MECHANICAL CONNECTION
- = NO WIRING CONNECTION
- = WIRING CONNECTION

NOTES:

REV	DATE	DRWN	DESCRIPTION	APP'D
2	5/21	AS	ADDED START-UP FIELD NOTES	PKL
1	4/21	AS	AS BUILT	PKL

REVISIONS

REFERENCE DRAWINGS
D1026-21
THRU
D1026-30

THIS DOCUMENT CONTAINS PROPRIETARY INFORMATION WITH ALL RIGHTS & TITLES RESERVED AND MAY NOT BE REPRODUCED IN WHOLE OR IN PART WITHOUT THE WRITTEN CONSENT OF EAGLE CONTROL CORP.

EAGLE CONTROL CORP.
YAPHANK N.Y.

PROJECT:
LOCKHEED MARTIN CORPORATION
OPERABLE UNITS 1 and 2
ELECTRICAL UPGRADES

TITLE:
WELL RW-100
REMOTE CONTROL PANEL
DIGITAL INPUT and RELAY OUTPUT
WIRING SCHEMATIC

ENGINEER:	DRAWN:	SCALE:	DATE:
PKL	AS	NONE	10-28-2020

PROJECT:	DRAWING NO:	REV:
1026	D1026-27	2

CONTINUED FROM D1026-26

CONTINUED FROM BELOW LEFT

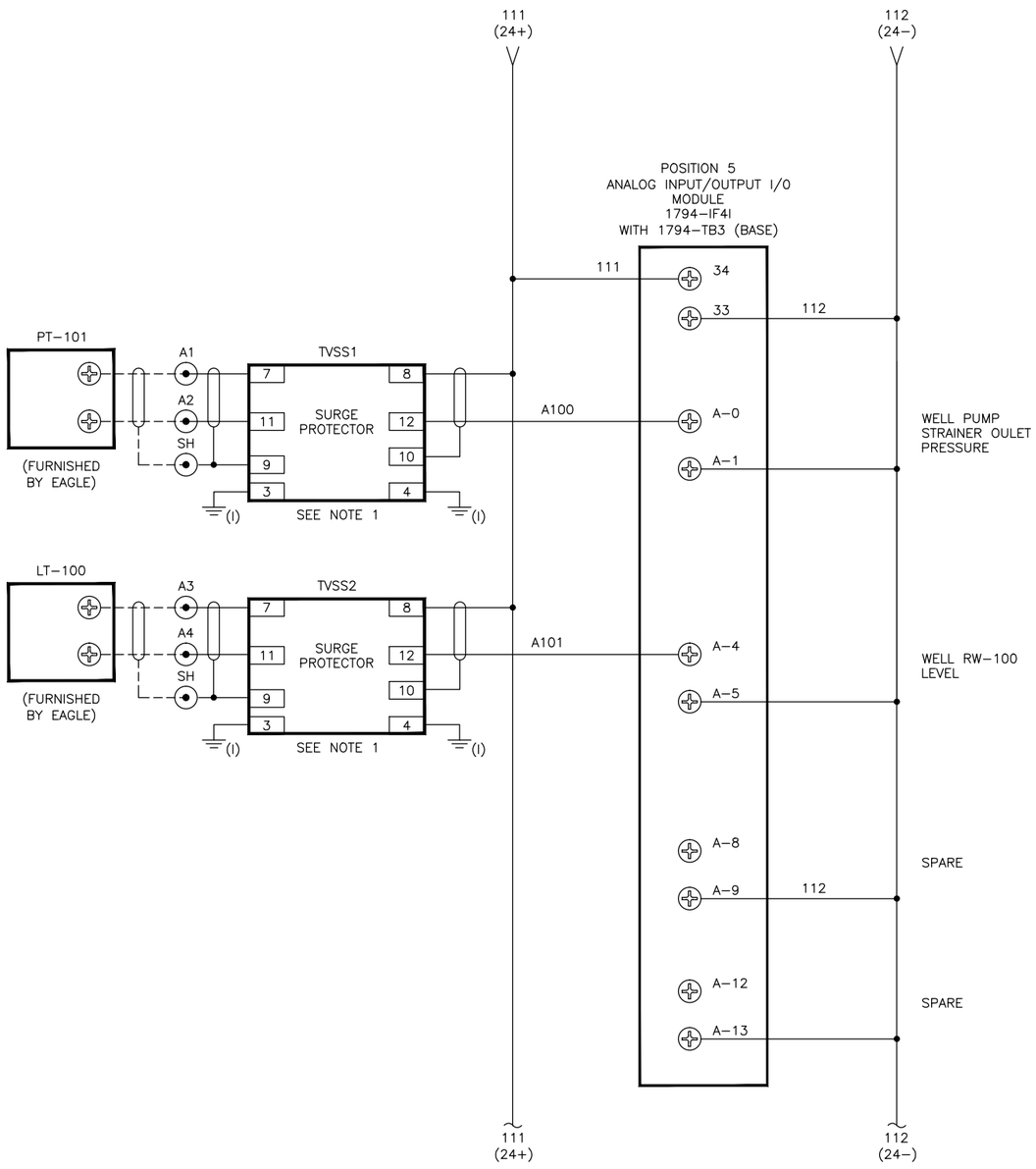

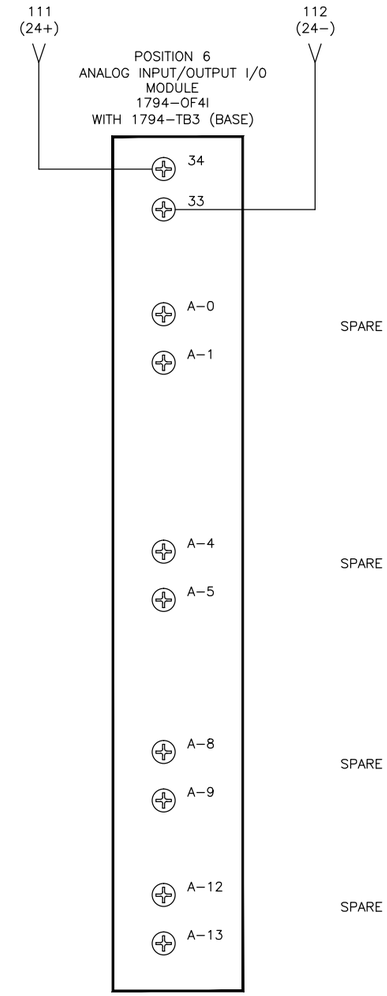

CONTINUED ABOVE RIGHT

GENERAL LEGEND

- = EAGLE TERMINAL BLOCK
- = MCC TERMINAL BLOCK
- = INSTRUMENT TERMINAL BLOCK
- = FIELD WIRING
- = MECHANICAL CONNECTION
- = NO WIRING CONNECTION
- = WIRING CONNECTION

NOTES:

1. RUN GROUNDS ON TVSS's SEPARATELY TO INSTRUMENT GROUND BAR (DO NOT DAISY CHAIN) (I)

REV	DATE	DRWN	DESCRIPTION	APP'D
2	5/21	AS	ADDED START-UP FIELD NOTES	PKL
1	4/21	AS	AS BUILT	PKL

REVISIONS

REFERENCE DRAWINGS
D1026-21
THRU
D1026-30

THIS DOCUMENT CONTAINS PROPRIETARY INFORMATION WITH ALL RIGHTS & TITLES RESERVED AND MAY NOT BE REPRODUCED IN WHOLE OR IN PART WITHOUT THE WRITTEN CONSENT OF EAGLE CONTROL CORP.

EAGLE CONTROL CORP.
YAPHANK N.Y.

PROJECT:
LOCKHEED MARTIN CORPORATION
OPERABLE UNITS 1 and 2
ELECTRICAL UPGRADES

TITLE:
WELL RW-100
REMOTE CONTROL PANEL
ANALOG I/O WIRING SCHEMATIC

ENGINEER:	DRAWN:	SCALE:	DATE:
PKL	AS	NONE	10-28-2020

PROJECT:	DRAWING NO:	REV:
1026	D1026-28	2

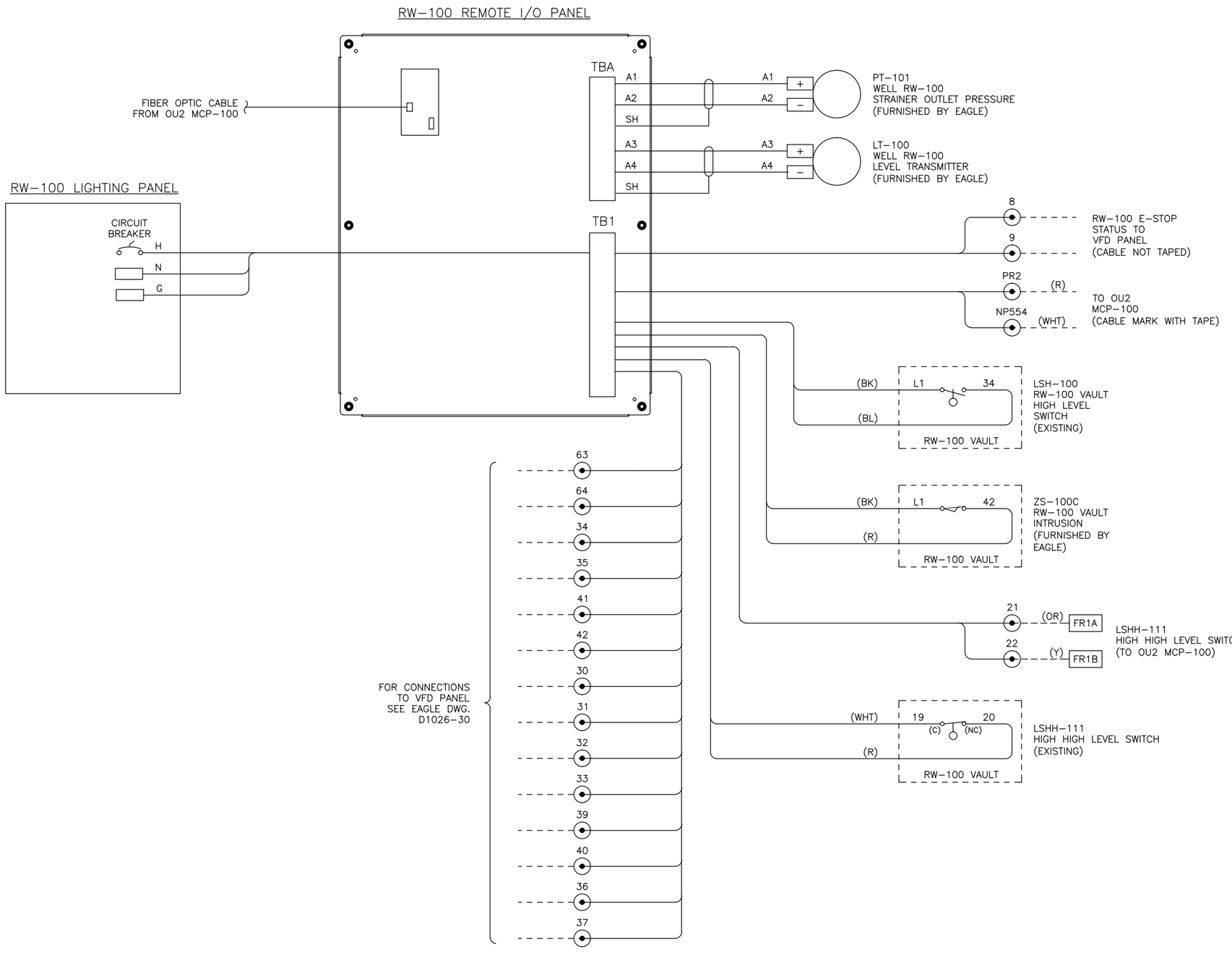

GENERAL LEGEND

- = EAGLE TERMINAL BLOCK
- = MCC TERMINAL BLOCK
- = INSTRUMENT TERMINAL BLOCK
- = FIELD WIRING
- = MECHANICAL CONNECTION
- = NO WIRING CONNECTION
- = WIRING CONNECTION

NOTES:

1. RUN GROUNDS ON TVSS's SEPARATELY TO INSTRUMENT GROUND BAR (DO NOT DAISY CHAIN) (I)

REV	DATE	DRWN	DESCRIPTION	APP'D
2	5/21	AS	ADDED START-UP FIELD NOTES	PKL
1	4/21	AS	AS BUILT	PKL

REVISIONS

REFERENCE DRAWINGS
D1026-21
THRU
D1026-30

THIS DOCUMENT CONTAINS PROPRIETARY INFORMATION WITH ALL RIGHTS & TITLES RESERVED AND MAY NOT BE REPRODUCED IN WHOLE OR IN PART WITHOUT THE WRITTEN CONSENT OF EAGLE CONTROL CORP.

EAGLE CONTROL CORP.
YAPHANK N.Y.

PROJECT:
LOCKHEED MARTIN CORPORATION
OPERABLE UNITS 1 and 2
ELECTRICAL UPGRADES

TITLE:
WELL RW-100
REMOTE CONTROL PANEL
INTERCONNECTION WIRING DIAGRAM SHEET 1

ENGINEER:	DRAWN:	SCALE:	DATE:
PKL	AS	NONE	10-28-2020

PROJECT:	DRAWING NO:	REV:
1026	D1026-29	2

RW-100 REMOTE I/O PANEL

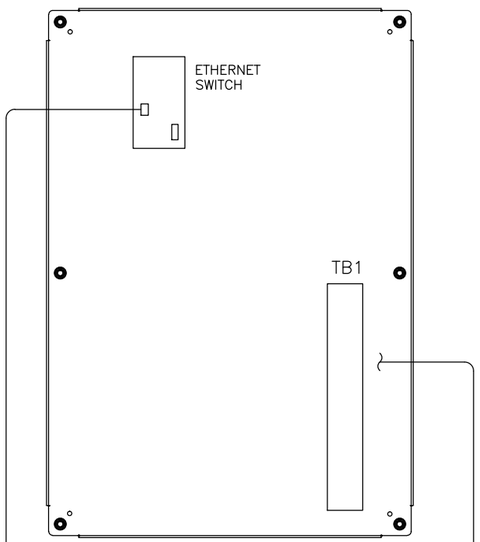

RW-100 SP-1 VFD PANEL

GENERAL LEGEND

- = EAGLE TERMINAL BLOCK
- = MCC TERMINAL BLOCK
- = INSTRUMENT TERMINAL BLOCK
- = FIELD WIRING
- = MECHANICAL CONNECTION
- = NO WIRING CONNECTION
- = WIRING CONNECTION

NOTES:

1. RUN GROUNDS ON TVSS's SEPARATELY TO INSTRUMENT GROUND BAR (DO NOT DAISY CHAIN) (I)

REV	DATE	DRWN	DESCRIPTION	APP'D
2	5/21	AS	ADDED START-UP FIELD NOTES	PKL
1	4/21	AS	AS BUILT	PKL

REVISIONS

REFERENCE DRAWINGS
D1026-21
THRU
D1026-30

THIS DOCUMENT CONTAINS PROPRIETARY INFORMATION WITH ALL RIGHTS & TITLES RESERVED AND MAY NOT BE REPRODUCED IN WHOLE OR IN PART WITHOUT THE WRITTEN CONSENT OF EAGLE CONTROL CORP.

EAGLE CONTROL CORP.
YAPHANK N.Y.

PROJECT:
LOCKHEED MARTIN CORPORATION
OPERABLE UNITS 1 and 2
ELECTRICAL UPGRADES

TITLE:
WELL RW-100
REMOTE CONTROL PANEL
INTERCONNECTION WIRING DIAGRAM SHEET 2

ENGINEER:	DRAWN:	SCALE:	DATE:
PKL	AS	NONE	10-28-2020

PROJECT:	DRAWING NO:	REV:
1026	D1026-30	2

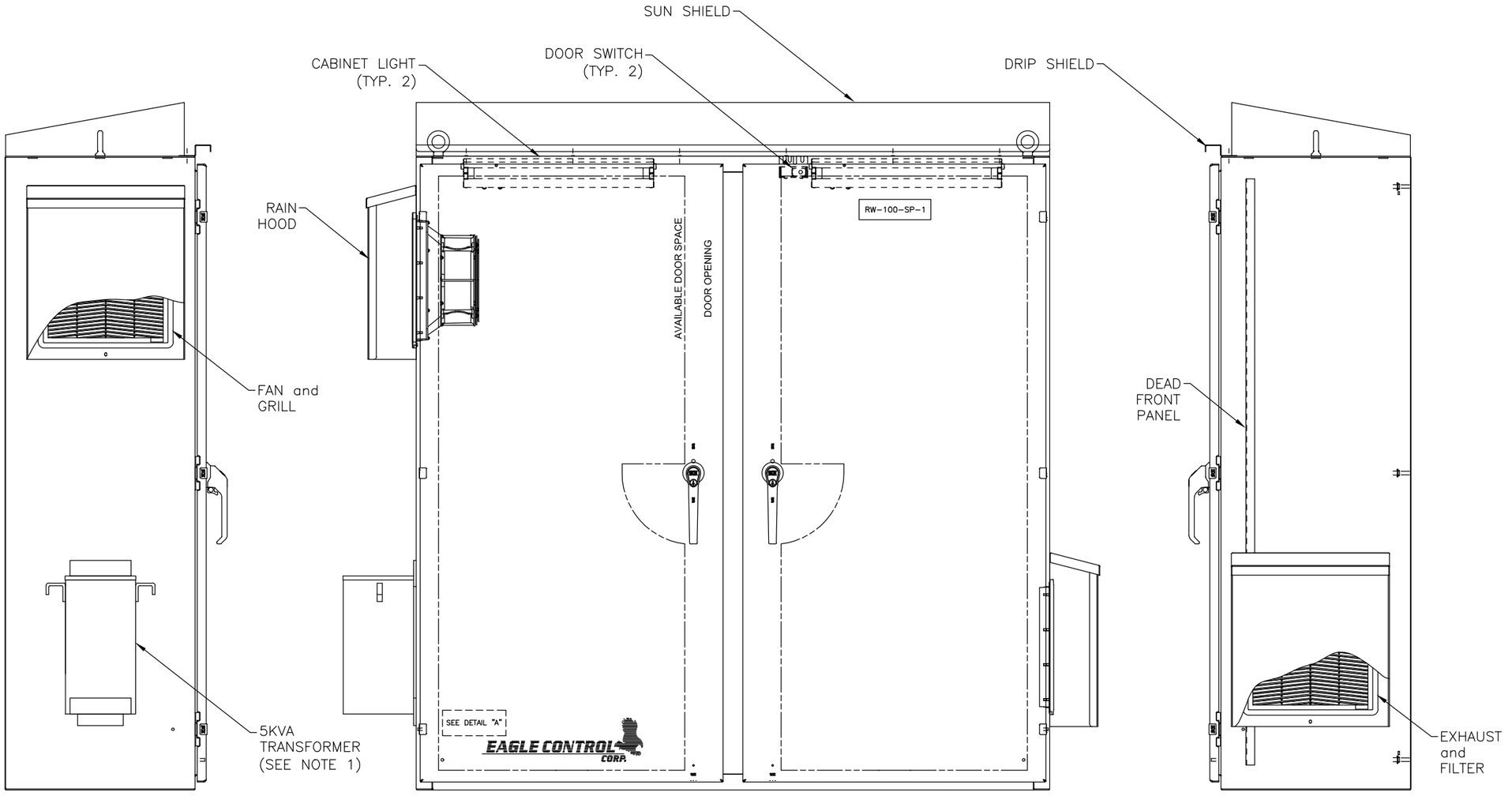

LEFT SIDE VIEW

SCALE 3/16" = 1"

FRONT PANEL ARRANGEMENT

SCALE 3/16" = 1"

RIGHT SIDE VIEW

SCALE 3/16" = 1"

NAMEPLATE DETAIL "A"

EAGLE CONTROL CORPORATION
23 OLD DOCK ROAD
YAPHANK, NY 11980
TEL: (631)924-1315

WELL RW-100
SP-1 VFD PANEL
EAGLE ORDER No. 1026

(NO SCALE)

GENERAL LEGEND

- = EAGLE TERMINAL BLOCK
- = MCC TERMINAL BLOCK
- = INSTRUMENT TERMINAL BLOCK
- = FIELD WIRING
- = MECHANICAL CONNECTION
- = NO WIRING CONNECTION
- = WIRING CONNECTION

NOTES:

1. 5KVA TRANSFORMER IS FITTED and PRE-WIRED AT EAGLE SHOP. SHIPPED SEPARATELY FOR REMOUNTING IN FIELD.

REV	DATE	DRWN	DESCRIPTION	APP'D
1	4/21	AS	AS BUILT	PKL

REVISIONS

REFERENCE DRAWINGS
D1026-31
THRU
D1026-38

THIS DOCUMENT CONTAINS PROPRIETARY INFORMATION WITH ALL RIGHTS & TITLES RESERVED AND MAY NOT BE REPRODUCED IN WHOLE OR IN PART WITHOUT THE WRITTEN CONSENT OF EAGLE CONTROL CORP.

EAGLE CONTROL CORP.
YAPHANK N.Y.

PROJECT:
LOCKHEED MARTIN CORPORATION
OPERABLE UNITS 1 and 2
ELECTRICAL UPGRADES

TITLE:
WELL RW-100
SP-1 VFD PANEL
PANEL ARRANGEMENT

ENGINEER:	DRAWN:	SCALE:	DATE:
PKL	AS	NONE	10-28-2020

PROJECT:	DRAWING NO:	REV:
1026	D1026-31	1

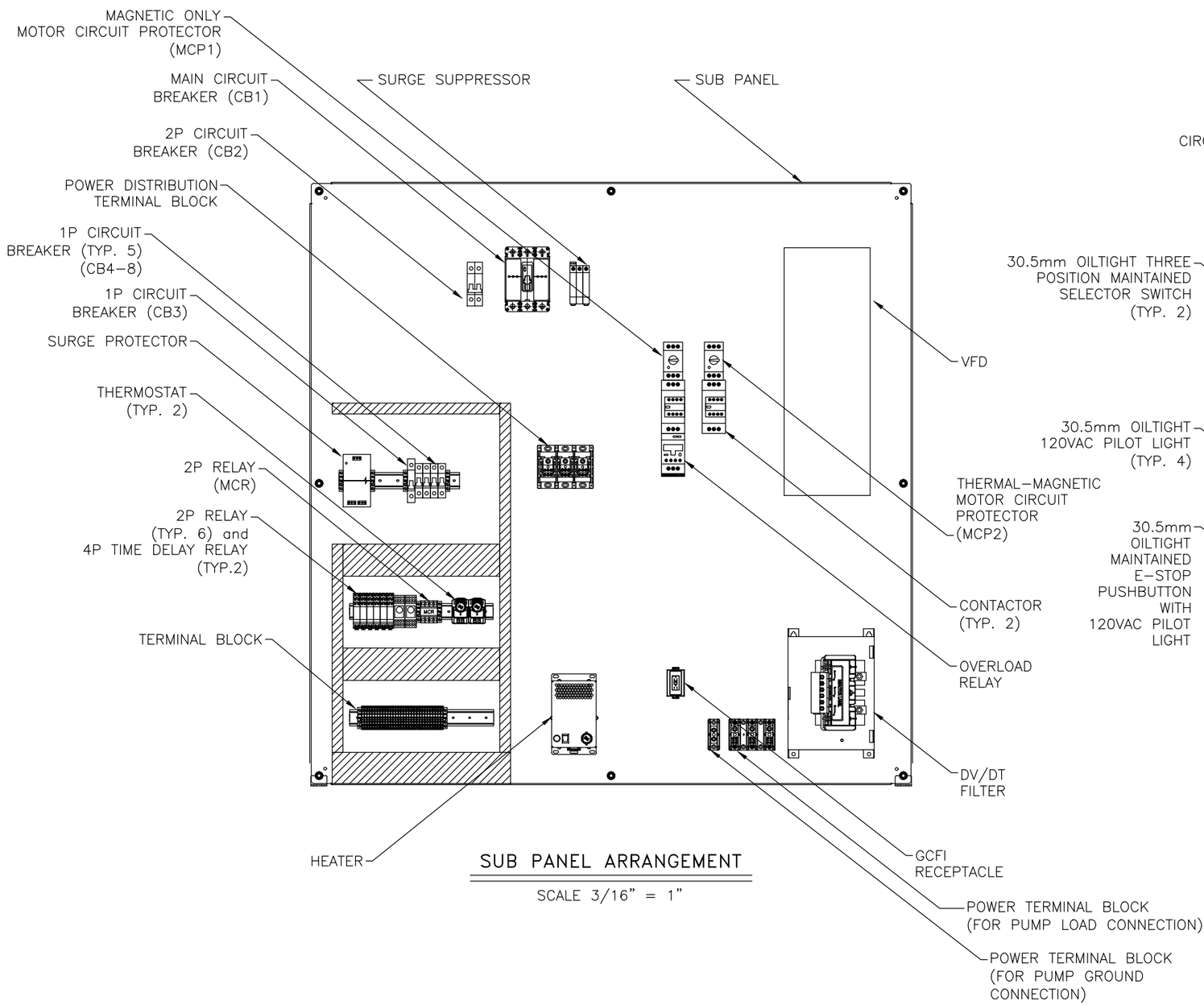

SUB PANEL ARRANGEMENT

SCALE 3/16" = 1"

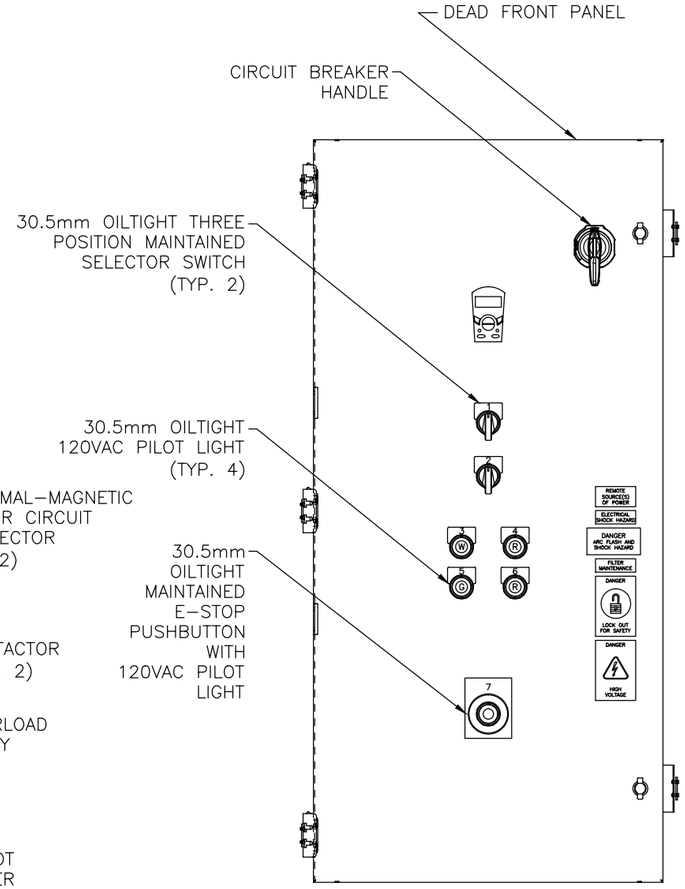

DEAD FRONT PANEL ARRANGEMENT

SCALE 3/16" = 1"

NAMEPLATE SCHEDULE

NP #	QTY	NAMEPLATE INSCRIPTION	SIZE / (LENS)	NP #	QTY	NAMEPLATE INSCRIPTION	SIZE / (LENS)
1	1	VFD MODE VFD–OFF–BYPASS	30.5mm	5	1	DRIVE STOPPED	30.5mm
2	1	DRIVE MODE LOCAL–OFF–REMOTE	30.5mm	6	1	DRIVE RUNNING	30.5mm
3	1	CONTROL POWER	30.5mm	7	1	EMERGENCY STOP	4.5"H x 3.5"W
4	1	DRIVE FAULT	30.5mm	8			

TERMINAL BLOCK LAYOUT

41	42	L1	N1	12	13	14	L2	23	L2	24	30	31	32	33	34	35	36	37	38	39	40	G	G	G	G	G	G	G	G	G	G

GENERAL LEGEND

- = EAGLE TERMINAL BLOCK
- = MCC TERMINAL BLOCK
- = INSTRUMENT TERMINAL BLOCK
- = FIELD WIRING
- = MECHANICAL CONNECTION
- = NO WIRING CONNECTION
- = WIRING CONNECTION

NOTES:

REV	DATE	DRWN	DESCRIPTION	APP'D
1	4/21	AS	AS BUILT	PKL

REVISIONS

REFERENCE DRAWINGS
D1026–31
THRU
D1026–38

THIS DOCUMENT CONTAINS PROPRIETARY INFORMATION WITH ALL RIGHTS & TITLES RESERVED AND MAY NOT BE REPRODUCED IN WHOLE OR IN PART WITHOUT THE WRITTEN CONSENT OF EAGLE CONTROL CORP.

EAGLE CONTROL CORP.
YAPHANK N.Y.

PROJECT:
LOCKHEED MARTIN CORPORATION
OPERABLE UNITS 1 and 2
ELECTRICAL UPGRADES

TITLE:
WELL RW–100
SP–1 VFD PANEL
PANEL ARRANGEMENT

ENGINEER:	DRAWN:	SCALE:	DATE:
PKL	AS	NONE	10–28–2020

PROJECT:	DRAWING NO:	REV:
1026	D1026–32	1

LOCKHEED MARTIN CORPORATION
OPERABLE UNITS 1 & 2 ELECTRICAL UPGRADES

REMOTE I/O PANEL BILL OF MATERIALS

ITEM No.	QTY.	MANUFACTURER	PART NUMBER	DESCRIPTION	U.L. FILE No.	U.L. CCN
1	1	SAGINAW	SCE-60EL6018SS6LPPL	60"H x 60"W x 18"D ENCLOSURE	E69392	NITW
2	1	SAGINAW	SCE-60P60SS6	SUB-PANEL	E69392	NITW
3	1	SAGINAW	SCE-DF60EL60	DEAD FRONT	E69392	NITW
4	1	SAGINAW	XX	SUN SHIELD	E69392	NITW
5	2	SAGINAW	SCE-TEMNO	THERMOSTAT	E358386	NITW2
6	1	SAGINAW	SCE-N12FA1010	FAN	E358386	NITW2
7	1	SAGINAW	SCE-N12FGA1010	EXHAUST GRILL	E358386	NITW2
8	1	SAGINAW	SCE-RH10N12SS	RAIN HOOD	E69392	NITW
9	2	SAGINAW	SCE-LF18NO	LIGHT	E358386	NITW2
10	1	SAGINAW	SCE-HF4001B	120V A.C., 400W HEATER WITH BUILT IN THERMOSTAT	E358386	NITW2
11	1	SAGINAW	SCE-DS30SS6	DRIP SHIELD	E69392	NITW
12	2	SAGINAW	SCE-LSA	DOOR SWITCH	E358386	NITW2
13	2	LOVATO	SM3R7500	THERMAL MAGNETIC MOTOR CIRCUIT PROTECTOR	E155982	NJOT
14	2	ABB	AF65-30-22-13	CONTACTOR W/AUX CONTACTS - 1N.O./1N.C.	E312527	NJOT
15	1	ALLEN-BRADLEY	20G11ND065JA0NNNNN	50HP, 65AMP POWERFLEX 755 VFD	E59272	NMMS
16	1	CUTLER/HAMMER	FHMVD12B	EXTERNAL OPERATING HANDLE FOR CB	E64983	DHJR
17	1	CUTLER/HAMMER	F3P100	3P, CIRCUIT BREAKER (UL489)	E7819	DHJR
18	1	CUTLER/HAMMER	E34TPB120LWG2A	30mm LED PILOT LIGHT - WHITE	E131568	NKCR
19	1	CUTLER/HAMMER	E34TPB120LGG2A	30mm LED PILOT LIGHT - GREEN	E131568	NKCR
20	2	CUTLER/HAMMER	E34TPB120LRG2A	30mm LED PILOT LIGHT - RED	E131568	NKCR
21	2	CUTLER/HAMMER	E34VHBL1-2X	30mm 3-POSITION SELECTOR SWITCH	E131568	NKCR
22	1	CUTLER/HAMMER	E34GDB63LED120-1X	30mm EMERGENCY STOP PUSHBUTTON	E131568	NKCR
23	1	EDISON	HPB106-3	POWER DISTRIBUTION TERMINAL BLOCK	E333541	QPQS
24	1	EDISON	PBC-33	COVER FOR HPB106 T.B.	E333541	QPQS
25	1	EDISON	HPB104-3	POWER TERMINAL BLOCK FOR PUMP LOAD CONNECTION	E333541	QPQS
26	1	EDISON	HPB101-1	POWER TERMINAL BLOCK FOR PUMP GROUND CONNECTION	E333541	QPQS
27	4	EDISON	PBC-21	COVER FOR HPB101 and HPB104	E333541	QPQS
28	1	TCI	V1K80A00	DV/DT FILTER	E116124	NIMX
29	1	SOLA	STV25K-10S	SURGE PROTECTOR	E335146	VZCA2
30	1	MERSEN	STP4803PDGM	SURGE SUPPRESSOR, 277/480Y WITH REMOTE CONTACT	E210793	VZCA2
31	1	ACME	T253014SS	5KVA, 480VAC x 120VAC 316L SS TRANSFORMER	E79947	XPTQ
32	1	SCHNEIDER ELECTRIC	M9F42215	2P, 15AMP, UL 489 CIRCUIT BREAKER	E215117	QVNU2
33	1	SCHNEIDER ELECTRIC	M9F42140	1P, 40AMP, UL 489 CIRCUIT BREAKER	E215117	QVNUR
34	1	SCHNEIDER ELECTRIC	M9F21101	1P, 1AMP, UL 1077 CIRCUIT BREAKER	E90509	QVNU2
35	1	SCHNEIDER ELECTRIC	M9F21102	1P, 2AMP, UL 1077 CIRCUIT BREAKER	E90509	QVNU2
36	1	SCHNEIDER ELECTRIC	M9F21104	1P, 4AMP, UL 1077 CIRCUIT BREAKER	E90509	QVNU2
37	1	SCHNEIDER ELECTRIC	M9F21116	1P, 15AMP, UL 1077 CIRCUIT BREAKER	E90509	QVNU2
38	1	SCHNEIDER ELECTRIC	M9F21120	1P, 20AMP, UL 1077 CIRCUIT BREAKER	E90509	QVNU2
39	6	FINDER	46.52.9.120.0074	2P, 120VAC, CONTROL RELAY	E106390	NRNT2
40	6	FINDER	97.02	2P, RELAY SOCKET FOR 46 SERIES	E140923	SWIV
41	1	FINDER	60.12.8.120.0050	2P, 120VAC, CONTROL RELAY 10AMP, OCTAL	E106390	NRNT2
42	1	FINDER	90.02	2P, OCTAL RELAY BASE	E140923	SWIV
43	2	FINDER	85.04.0.125.0000	4P, 120VAC, TIME DELAY RELAY	E106390	NRNT2
44	2	FINDER	94.74	4P, RELAY SOCKET FOR 85 SERIES	E140923	SWIV
45	1	PHOENIX CONTACT	5600639 (EM DUO-120/15/GFI/AUX)	120VAC, 15AMP RECEPTACLE	E238705	NRAQ
46	1	PHOENIX CONTACT	3031364	TERMINAL BLOCK	E60425	XCFR2

GENERAL LEGEND

= EAGLE TERMINAL BLOCK
= MCC TERMINAL BLOCK
= INSTRUMENT TERMINAL BLOCK
= FIELD WIRING
= MECHANICAL CONNECTION
= NO WIRING CONNECTION
= WIRING CONNECTION

NOTES:

REV	DATE	DRWN	DESCRIPTION	APP'D
1	4/21	AS	AS BUILT	PKL

REVISIONS

REFERENCE DRAWINGS
D1026-31
THRU
D1026-38

THIS DOCUMENT CONTAINS PROPRIETARY INFORMATION WITH ALL RIGHTS & TITLES RESERVED AND MAY NOT BE REPRODUCED IN WHOLE OR IN PART WITHOUT THE WRITTEN CONSENT OF EAGLE CONTROL CORP.

EAGLE CONTROL CORP.
YAPHANK N.Y.

PROJECT:
LOCKHEED MARTIN CORPORATION
OPERABLE UNITS 1 and 2
ELECTRICAL UPGRADES

TITLE:
WELL RW-100
SP-1 VFD PANEL
BILL of MATERIALS

ENGINEER:	DRAWN:	SCALE:	DATE:
PKL	AS	NONE	10-28-2020

PROJECT:	DRAWING NO:	REV:
1026	D1026-33	1

THIS PANEL = 480VAC 3 PH – TOTAL AMP 61 – TOTAL HP 40 – LARGEST MOTOR 40 HP – SCCR–18KAIC

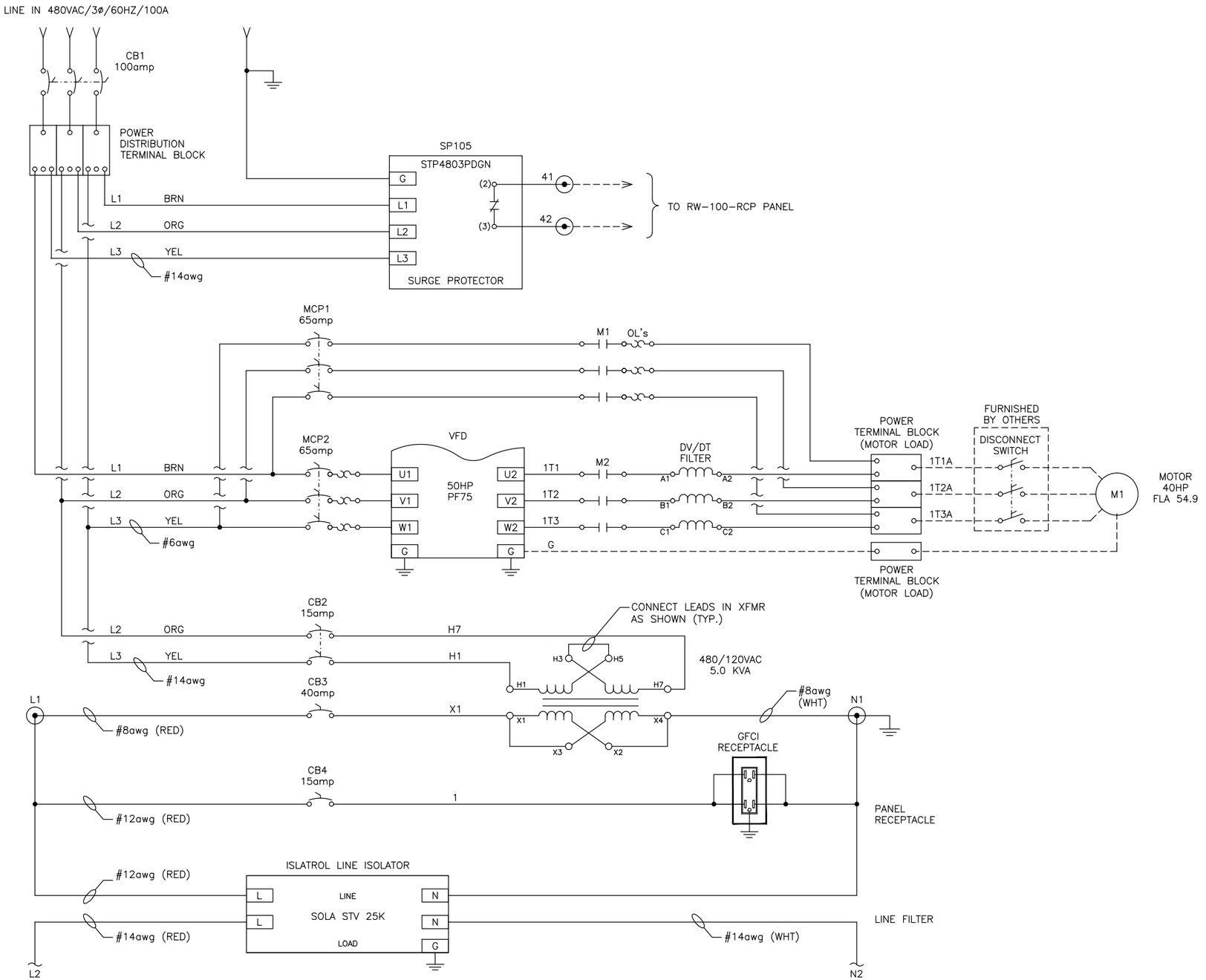

CONTINUED ON D1026–34

GENERAL LEGEND

- = EAGLE TERMINAL BLOCK
- = MCC TERMINAL BLOCK
- = INSTRUMENT TERMINAL BLOCK
- = FIELD WIRING
- = MECHANICAL CONNECTION
- = NO WIRING CONNECTION
- = WIRING CONNECTION

NOTES:

REV	DATE	DRWN	DESCRIPTION	APP'D
1	4/21	AS	AS BUILT	PKL

REVISIONS

REFERENCE DRAWINGS
D1026–31
THRU
D1026–38

THIS DOCUMENT CONTAINS PROPRIETARY INFORMATION WITH ALL RIGHTS & TITLES RESERVED AND MAY NOT BE REPRODUCED IN WHOLE OR IN PART WITHOUT THE WRITTEN CONSENT OF EAGLE CONTROL CORP.

EAGLE CONTROL CORP.
YAPHANK N.Y.

PROJECT:
LOCKHEED MARTIN CORPORATION
OPERABLE UNITS 1 and 2
ELECTRICAL UPGRADES

TITLE:
WELL RW–100
SP–1 VFD PANEL
POWER WIRING SCHEMATIC

ENGINEER:	DRAWN:	SCALE:	DATE:
PKL	AS	NONE	10–28–2020

PROJECT:	DRAWING NO:	REV:
1026	D1026–34	1

CONTINUED FROM D1026-33

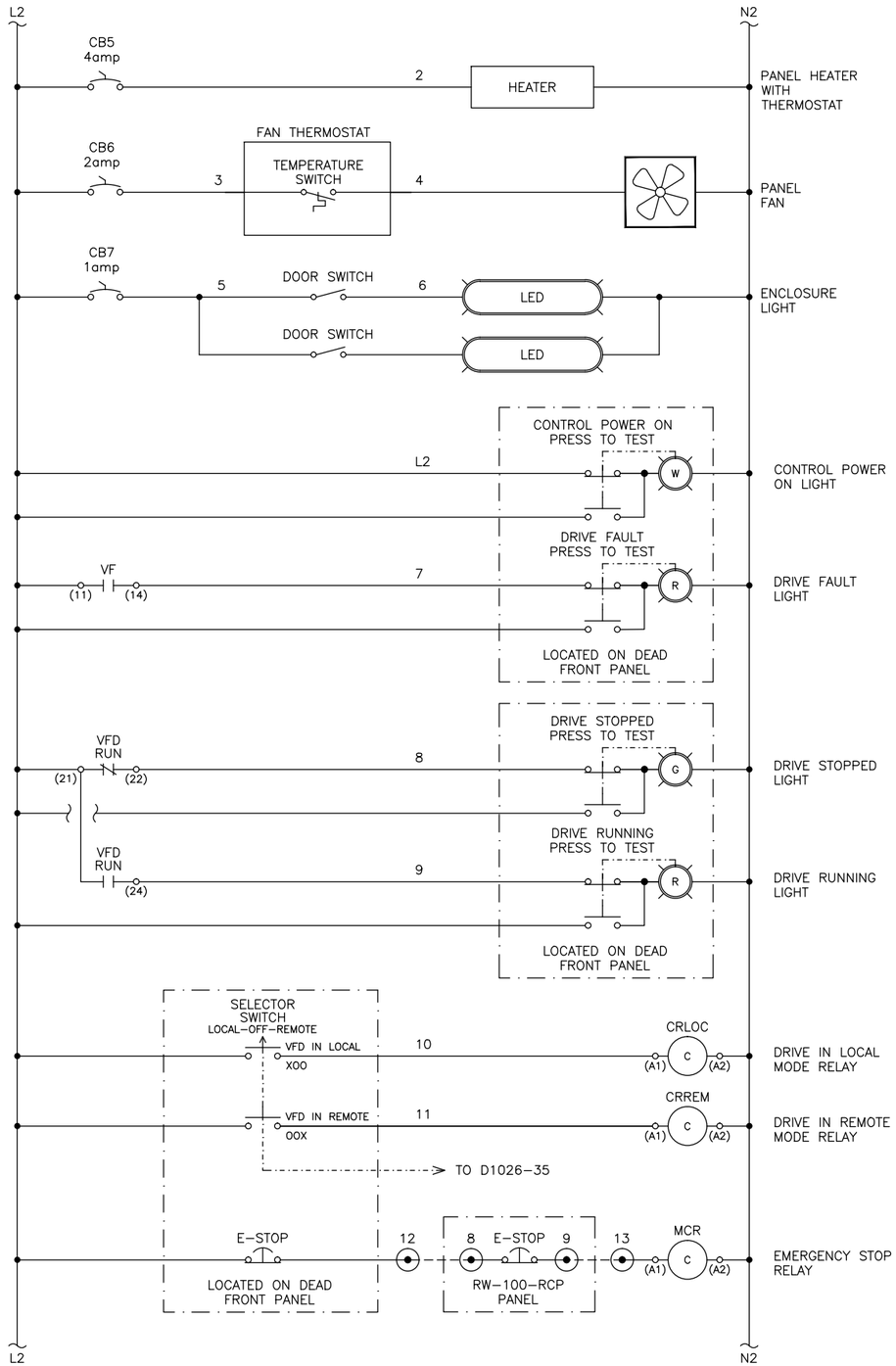

CONTINUED ABOVE RIGHT

CONTINUED FROM BELOW LEFT

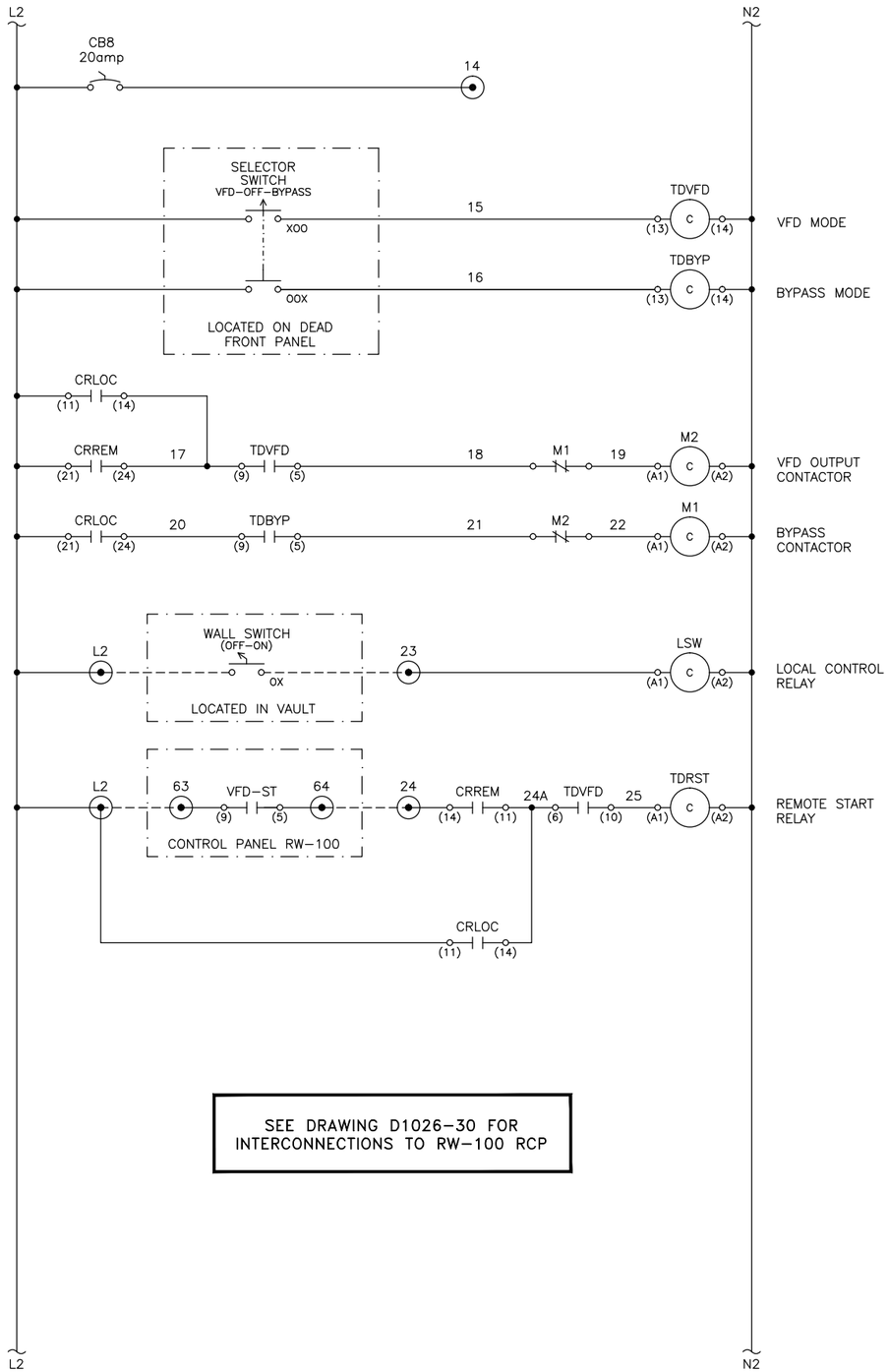

SEE DRAWING D1026-30 FOR INTERCONNECTIONS TO RW-100 RCP

CONTINUED ON D1026-35

GENERAL LEGEND

- = EAGLE TERMINAL BLOCK
- = MCC TERMINAL BLOCK
- = INSTRUMENT TERMINAL BLOCK
- = FIELD WIRING
- = MECHANICAL CONNECTION
- = NO WIRING CONNECTION
- = WIRING CONNECTION

NOTES:

REV	DATE	DRWN	DESCRIPTION	APP'D
1	4/21	AS	AS BUILT	PKL

REVISIONS

REFERENCE DRAWINGS
D1026-31
THRU
D1026-38

THIS DOCUMENT CONTAINS PROPRIETARY INFORMATION WITH ALL RIGHTS & TITLES RESERVED AND MAY NOT BE REPRODUCED IN WHOLE OR IN PART WITHOUT THE WRITTEN CONSENT OF EAGLE CONTROL CORP.

EAGLE CONTROL CORP.
YAPHANK N.Y.

PROJECT:
LOCKHEED MARTIN CORPORATION
OPERABLE UNITS 1 and 2
ELECTRICAL UPGRADES

TITLE:
WELL RW-100
SP-1 VFD PANEL
ELEMENTARY WIRING SCHEMATIC

ENGINEER:	DRAWN:	SCALE:	DATE:
PKL	AS	NONE	10-28-2020

PROJECT:	DRAWING NO:	REV:
1026	D1026-35	1

CONTINUED FROM D1026-34

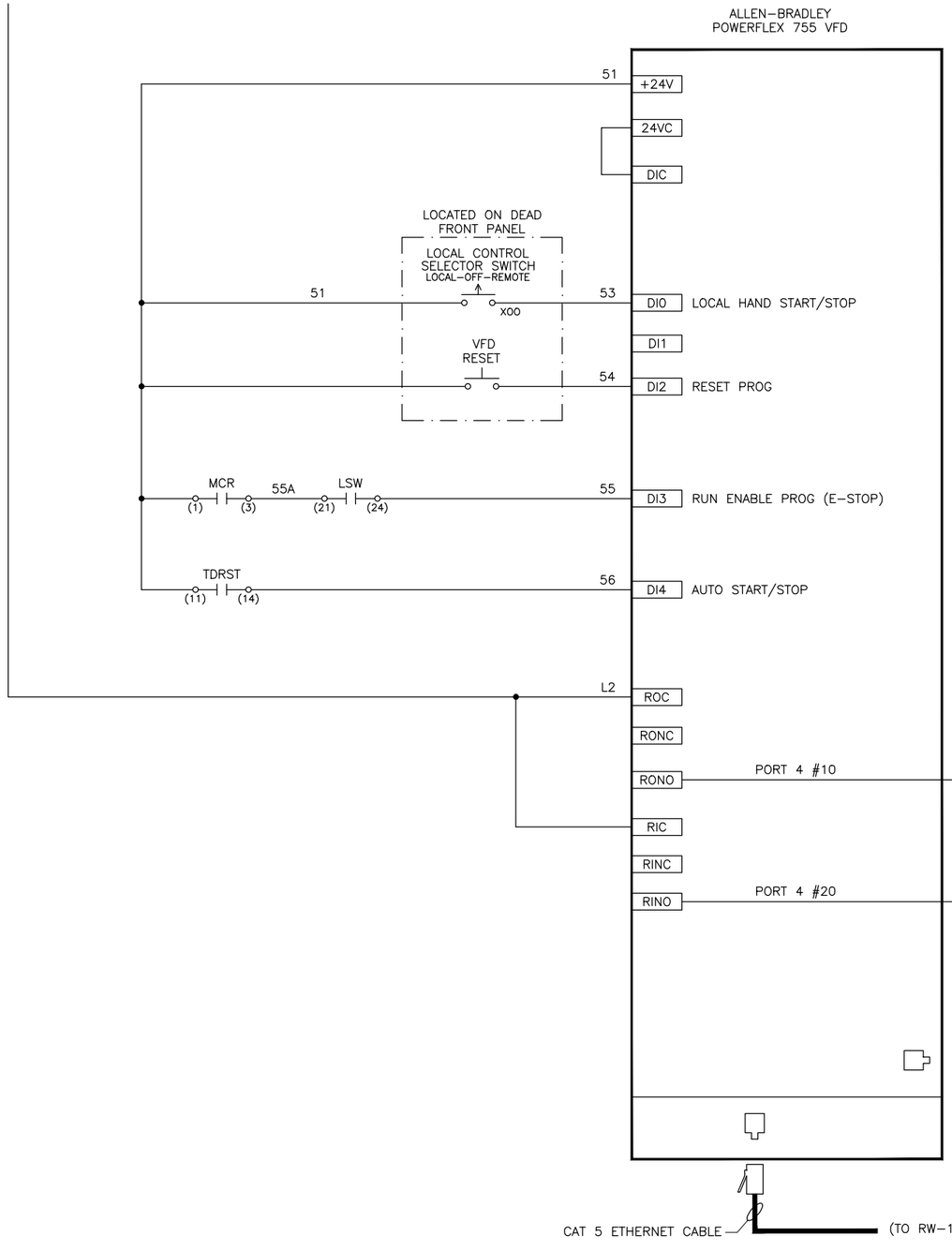

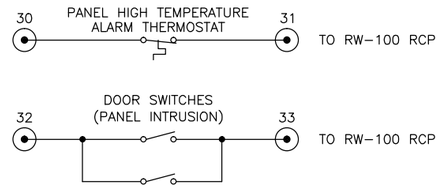

SEE DRAWING D1026-30 FOR
INTERCONNECTIONS TO RW-100 RCP

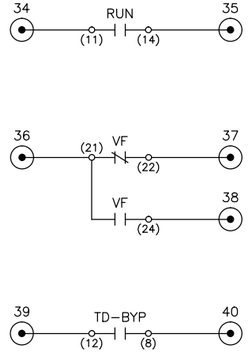

GENERAL LEGEND

- = EAGLE TERMINAL BLOCK
- = MCC TERMINAL BLOCK
- = INSTRUMENT TERMINAL BLOCK
- = FIELD WIRING
- = MECHANICAL CONNECTION
- = NO WIRING CONNECTION
- = WIRING CONNECTION

NOTES:

REV	DATE	DRWN	DESCRIPTION	APP'D
1	4/21	AS	AS BUILT	PKL

REVISIONS

REFERENCE DRAWINGS
D1026-31
THRU
D1026-38

THIS DOCUMENT CONTAINS PROPRIETARY INFORMATION WITH ALL RIGHTS & TITLES RESERVED AND MAY NOT BE REPRODUCED IN WHOLE OR IN PART WITHOUT THE WRITTEN CONSENT OF EAGLE CONTROL CORP.

EAGLE CONTROL CORP.
YAPHANK N.Y.

PROJECT:
LOCKHEED MARTIN CORPORATION
OPERABLE UNITS 1 and 2
ELECTRICAL UPGRADES

TITLE:
WELL SRW-100
SP-1 VFD PANEL
ELEMENTARY WIRING SCHEMATIC

ENGINEER:	DRAWN:	SCALE:	DATE:
PKL	AS	NONE	10-28-2020

PROJECT:	DRAWING NO:	REV:
1026	D1026-36	1

OU1 MAIN CONTROL PANEL (MCP-100)

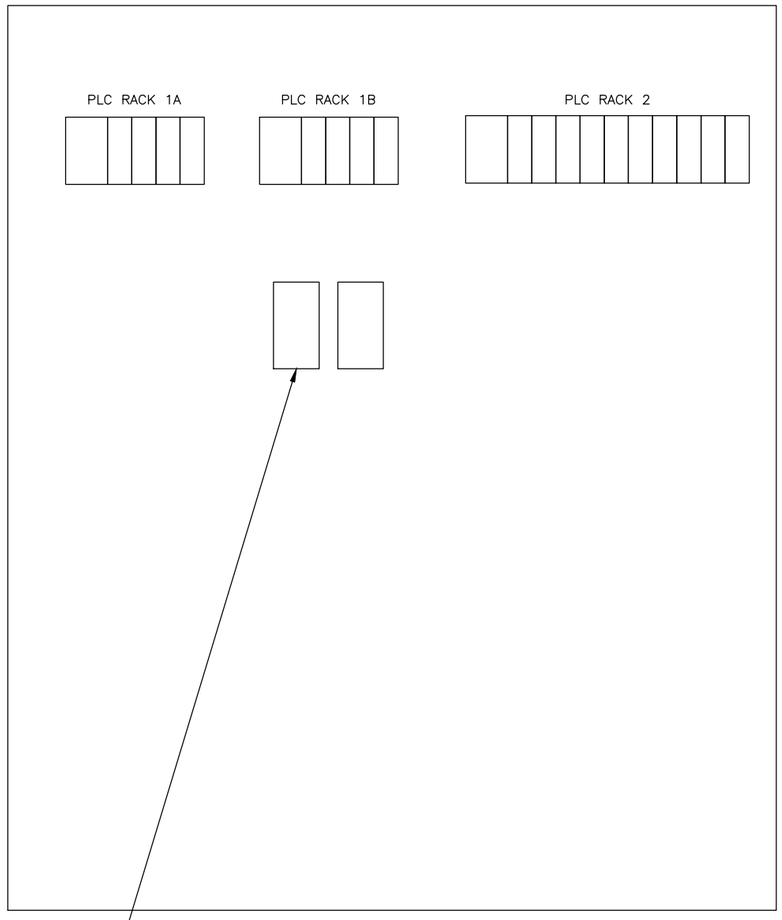

REMOVE EXISTING ETHERNET SWITCHES
INSTALL COMBINATION
ETHERNET-FIBER OPTIC SWITCHES
WITH RJ-45 and SFP PORTS

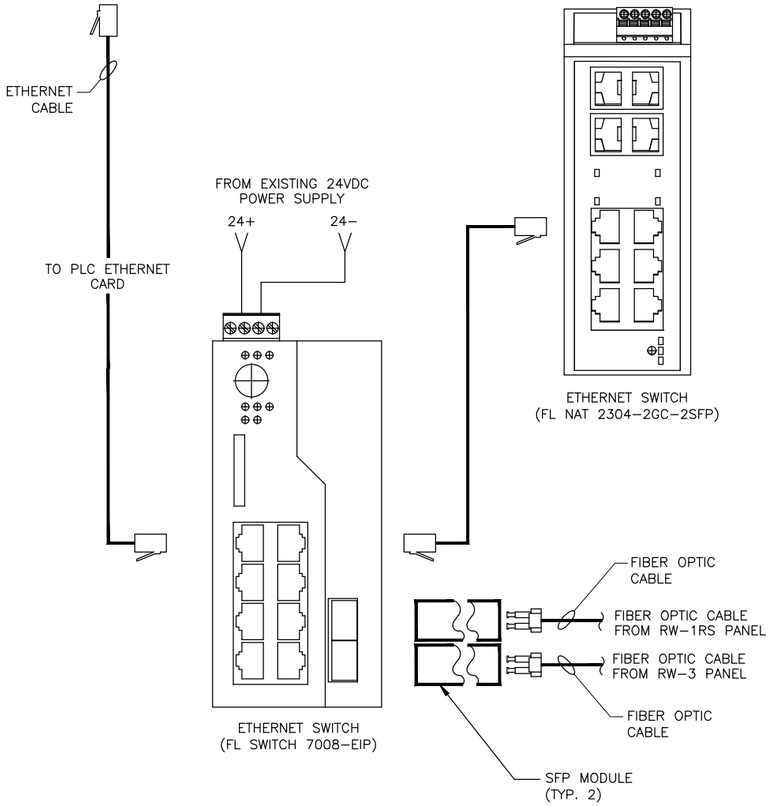

LOCATION OF ETHERNETS ARE SHOWN
SEPARATED FOR CLARITY

GENERAL LEGEND

= EAGLE TERMINAL BLOCK
= MCC TERMINAL BLOCK
= INSTRUMENT TERMINAL BLOCK
= FIELD WIRING
= MECHANICAL CONNECTION
= NO WIRING CONNECTION
= WIRING CONNECTION

NOTES:

REV	DATE	DRWN	DESCRIPTION	APP'D
1	4/21	AS	AS BUILT	PKL

REVISIONS

REFERENCE DRAWINGS
D1026-31
THRU
D1026-38

THIS DOCUMENT CONTAINS PROPRIETARY INFORMATION WITH ALL RIGHTS & TITLES RESERVED AND MAY NOT BE REPRODUCED IN WHOLE OR IN PART WITHOUT THE WRITTEN CONSENT OF EAGLE CONTROL CORP.

EAGLE CONTROL CORP.
YAPHANK N.Y.

PROJECT:
LOCKHEED MARTIN CORPORATION
OPERABLE UNITS 1 and 2
ELECTRICAL UPGRADES

TITLE:
OU1 MAIN CONTROL PANEL
COMMUNICATION NETWORK
MODIFICATIONS

ENGINEER:	DRAWN:	SCALE:	DATE:
PKL	AS	NONE	10-28-2020

PROJECT:	DRAWING NO:	REV:
1026	D1026-37	1

OU1 MOTOR CONTROL CENTER
ACTIVE FILTER

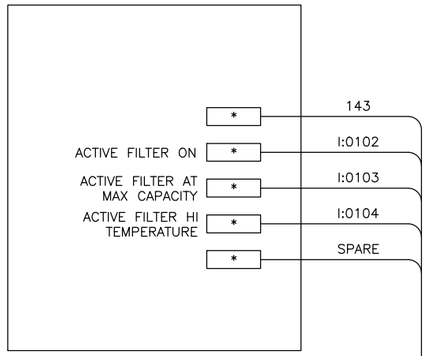

OU1 MAIN CONTROL PANEL (MCP-100)

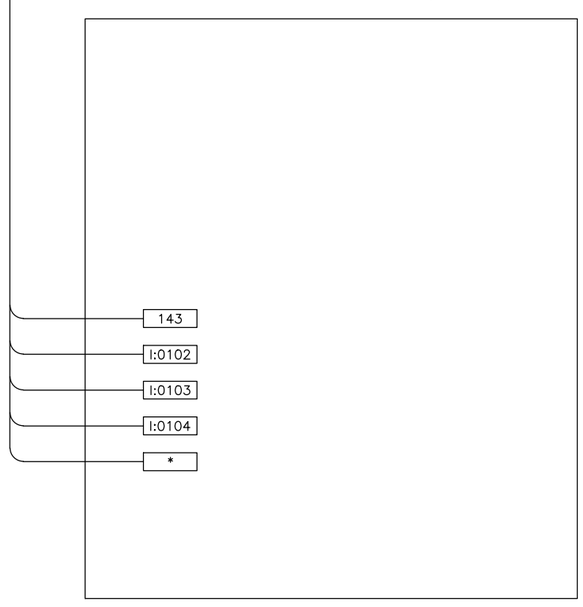

OU1 ACTIVE FILTER CONNECTIONS

OU2 MOTOR CONTROL CENTER
ACTIVE FILTER

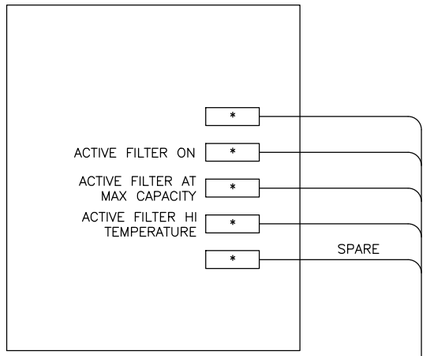

OU2 MAIN CONTROL PANEL (MCP-100)

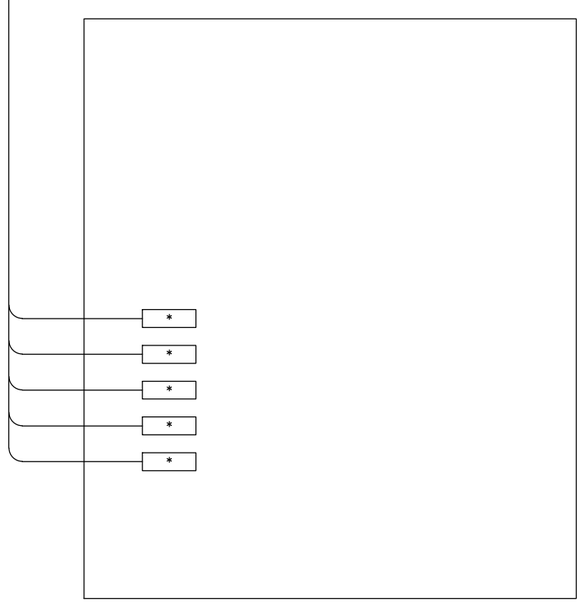

OU2 ACTIVE FILTER CONNECTIONS

GENERAL LEGEND

= EAGLE TERMINAL BLOCK
= MCC TERMINAL BLOCK
= INSTRUMENT TERMINAL BLOCK
= FIELD WIRING
= MECHANICAL CONNECTION
= NO WIRING CONNECTION
= WIRING CONNECTION

NOTES:

REV	DATE	DRWN	DESCRIPTION	APP'D
1	4/21	AS	AS BUILT	PKL

REVISIONS

REFERENCE DRAWINGS
D1026-31
THRU
D1026-38

THIS DOCUMENT CONTAINS PROPRIETARY INFORMATION WITH ALL RIGHTS & TITLES RESERVED AND MAY NOT BE REPRODUCED IN WHOLE OR IN PART WITHOUT THE WRITTEN CONSENT OF EAGLE CONTROL CORP.

EAGLE CONTROL CORP.
YAPHANK N.Y.

PROJECT:
LOCKHEED MARTIN CORPORATION
OPERABLE UNITS 1 and 2
ELECTRICAL UPGRADES

TITLE:
MCC ACTIVE FILTER
STATUS SIGNAL CONNECTIONS TO
PLC's AT OU1 and OU2

ENGINEER:	DRAWN:	SCALE:	DATE:
PKL	AS	NONE	10-28-2020

PROJECT:	DRAWING NO:	REV:
1026	D1026-38	1

OPERATION AND MAINTENANCE MANUAL

FOR
LOCKHEED MARTIN CORPORATION
FORMER UNISYS FACILITY
LAKE SUCCESS, N.Y.

EXTRACTION/RECOVERY WELL VFD UPGRADES – SPRING 2021
FIELD INSTRUMENTS

ENGINEER

AMEC E&E, PC
511 CONGRESS ST. SUITE 200
PORTLAND, ME 04101

CONTRACTOR

HINCK ELECTRICAL CONTRACTOR, INC
75 ORVILLE DRIVE #1
BOHEMIA, N.Y. 11716

SUBMITTED BY

EAGLE CONTROL CORPORATION
23 OLD DOCK ROAD
YAPHANK, N.Y. 11980

JOB No. 1026

DATE

MAY 2021

TABLE of CONTENTS

WELL RW-1RS
WELL RW-1RD
WELL EW-1R

WELL RW-100

WELL LEVEL INSTRUMENT (RW-1RS, RW-1RD, RW-EW1R, RW-100……...……1
WELL DISCHARGE PRESSURE INSTRUMENT (RW-100)……....2
VAULT INTRUSION LIMIT SWITCH ……..……..3

SEE ABOVE LISTED SECTION COVER SHEETS FOR SPECIFICATION SECTION IDENTIFICATION

SUBMERSIBLE LEVEL SENSOR

Specification Section 13419-2.1

PMC ENGINEERING
Model MTM3000

Calibration: 0-20 PSI

23 Old Dock Road • Yaphank, NY 11980 • Tel: (631) 924-1315 • Fax: (631) 924-1012

Depth and Level Pressure Transmitter
Miniature MTM3000 Series

The Miniature MTM3000 Series submersible transmitters are specifically designed for depth and level measurements of groundwater, wastewater and sea water where space is very limited. The housing diameter of 0.39 inches offers the user an ideal high performance level measurement in small diameter, i.e. 1/2" monitoring wells, stand pipes and bore holes. The titanium construction and integral polyurethane cable provide a reliable long term solution for these difficult-to-measure applications. Kevlar is used as a cable reinforcement to avoid any elongation, particularly when long lengths of cable are required for deep wells. Long term stability of typically ±0.1% per year also contributes toward a maintenance-free installation.

An in-line converter is available which is generally positioned above the water line but becomes integral with the transducer to provide either 4-20 mA, or 0-5 VDC output. PMC also offers a range of 1" diameter dataloggers which can be supplied in-line or at the well head for continuous monitoring.

An extensive range of accessories is available . See details on back page.

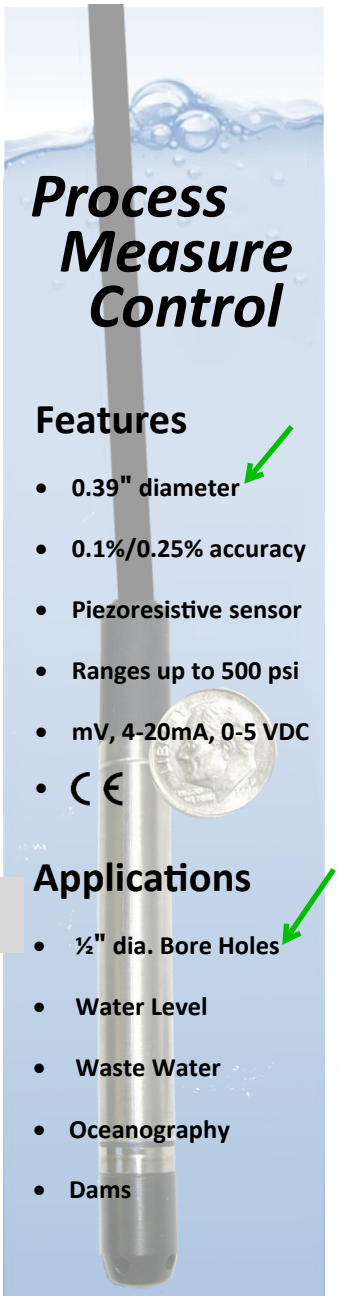

Process Measure Control

Features

- **0.39" diameter**
- **0.1%/0.25% accuracy**
- **Piezoresistive sensor**
- **Ranges up to 500 psi**
- **mV, 4-20mA, 0-5 VDC**
- CE

Applications

- **½" dia. Bore Holes**
- **Water Level**
- **Waste Water**
- **Oceanography**
- **Dams**

Technical Specifications

Full Scale Ranges (Zero Based)	Any range from 0-10 to 0-500 psig, & 0-10 to 0-500 psia Available in any engineering units, such as psi, Pa, in H2O, Bar, etc.
Accuracy	±0.1% FS or ±0.25% FS available. Includes non-linearity, hysteresis, repeatability . *Note: ±0.1% not generally available with mV output*
Overpressure	3 x range
Operating Temperature Range	25° to 125°F (-4° to +50°C)
Compensated Temperature Range	30° to 85°F (-2° to +30°C)
Temperature Effects (Compensated)	±1.5% total for 25° to 125° F, over 50 psi FS ±2% total for 25° to 125° F, up to 50 psi FS
Long Term Stability	0.1% FS per year for pressure ranges > 30 psi FS Prorated for ranges below 30 psi FS under standard conditions
Electrical (4 wire bridge)	Supply Voltage: 1-15VDC Output Signal: 5mV/V typical, ratiometric with supply Input Impedance: >10k ohm Bridge resistance: 3k ohm typical
Electrical (4-20 mA and VDC) with In-Line Converter - Fig 1	4-20 mA (2 wire) from 9-33 VDC supply 0-5 or 0-10 VDC (3wire) from 15-30 VDC supply
Intrinsically Safe Approvals	Reference VL 3000/4000 - consult factory
Cable	Polyurethane molded, vented with Kevlar, 6 conductors
Housing	Titanium standard with 5-year corrosion warranty For *316L Stainless Steel contact the factory*
Weight (excluding cable)	1 oz. (excluding cable)

PMC Engineering adopts a continuous development program which sometimes necessitates specification changes without notice

Contact

PMC Engineering LLC
11 Old Sugar Hollow Rd
Danbury, CT 06810
USA
sales@pmc1.com
Tel: 203-792-8686
Fax: 203-743-2051
www.pmc1.com

Represented by:

Your depth and level specialists for Ground, Surface, Sea and Waste Water

MTM-3213-20psig-0.25%-175cable-MP11

PMC Configurator

MTM x x x x

Model Construction	Depth Cone 0.39"	3
Housing Material	316L Stainless Steel-*contact factory*	1
	Titanium - 5 year corrosion warranty	2
Electrical Connection	Polyurethane molded cable	1
Cable length must be specified at the time of ordering. If ordering converter (fig.1) two lengths must be specified. Sensor to converter/converter to termination.		
Electrical Configuration	Millivolt uncompensated	0
	Millivolt compensated	1
	Volts, specify 0-5 or 0-10 (fig.1)	2
	4-20 mA (fig.1)	3

Example Ordering Format: MTM3213 - 40psig - 0.1% - 90/10' cable

Related Products

The VersaLine **VL3000** and **VL4000** offer similar performance with 1" and 3/4" diameter housings respectively. The **VL2000** provides an open face construction avoiding clogging or sludge build up in wastewater and similar applications. PMC manufactures a wide range of other level transmitters including flush designs for use in water and wastewater management, food and beverage, pulp and paper, and pharmaceutical applications. Please refer to appropriate data sheets.

For Zero Maintenance



In order to reduce on site maintenance PMC has developed the MP 11 Moisture Protection Reference Volume. For vented gauge transmitters this provides a total isolation to the atmosphere by using a custom bladder while maintaining the high performance of the transmitter. This changes volume with Barometric pressure. Totally maintenance free. Please specify MP 11.

Mechanical Details

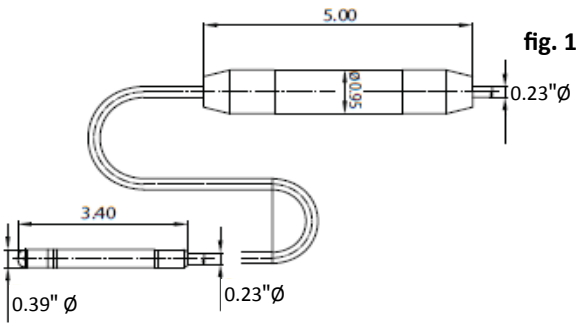

fig. 1

Dimensions in inches

Electrical Details

Configuration	+V Supply	0V Supply	+V Output	-V Output	Ground
Millivolt	White	Yellow	Brown	Green	N/C
4-20mA	White	Yellow			Green
0-5VDC/0-10VDC	White	Yellow	Brown	Yellow	Green

Process Measure Control

Sensors for

- Pressure
- Level
- Vacuum
- Humidity
- Temperature
- Force
- Position

Accessories

PMC offers a range of Accessories and variants for depth and level transmitters. Reference separate data sheet.

- Termination Enclosure
- Cable Hanger
- Moisture Protection
- Calibration Adaptor
- Sink Weights
- Level Meters

PMC is

- Engineering Driven
- Confidential
- Experienced
- Responsive
- Dynamic
- Friendly

Your depth and level specialists for Ground, Surface, Sea and Waste Water

PMC ENGINEERING

MTM3000 Series

Installation and Operating Instructions for Depth and Level Sensors



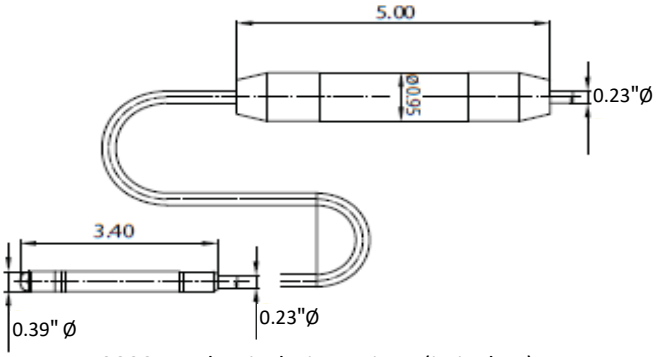

Fig. 1 - MTM3000 Mechanical Dimensions (in inches)



Fig. 2 - MTM3000 with TE-11c

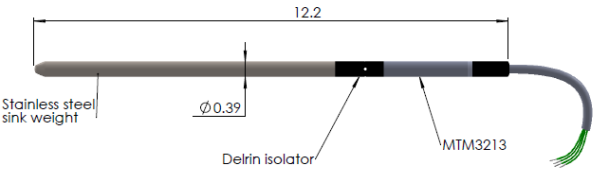

Fig. 3- MTM3000 with sink weight

Date	June 28, 2019
Model	MTM3000
Range	10 psi g
S/N	23461
Supply Voltage	9 to 33Vdc
Output	4-20mA d.c.
Accuracy	±0.25% BSL
Operating Temperature Range	25° to 125°F
Compensated Temperature Range	30° to 85°F
Temperature Effects	±1.5%
Electrical Connections	
Supply Positive	White
Supply Negative	Yellow
Ground (case)	Green
Shield (not connected to case	Drain wire
Cable Length	300ft
0% = 4.00mA 50% = 12.00mA 100% = 20.00mA	

Sample Calibration Data

Electrical connections (other colors not connected)
Specify at time of order

Configuration	+V Supply	0V Supply	+V Output	-V Output	Ground
Millivolt	White	Yellow	Brown	Green	N/C
4-20mA	White	Yellow			Green
0-5VDC/0-10VDC	White	Yellow	Brown	Yellow	Green

General Sensor Performance Details

Accuracy: ±0.1%FS (BSL) or ±0.25%FS (BSL)

Operating Temperature: 25° to +125°F (-4° to +50°C)

Compensated Temperature: 30° to 85°F (-2° to +30°C)

Full Scale Ranges: 0-10 to 0-500 psig & psia

Installation Instructions

Below are the installation instructions for the MTM3000 Series of Submersible Depth & Level Transmitters. Please read this document before starting installation.

1. **A black vinyl transit sleeve prevents dirt and fluid going into the electrical cable terminations and specifically prevents humid air or water from entering the vent tube. Remove the sleeve only when connecting the sensor to the system.**



It is extremely important to protect the vent tube from humid conditions which can result in the vent tube becoming blocked. The factory purges the vent tube with nitrogen prior to fitting the cap.

Note: The sensor receives barometric pressure changes through the internal vent tube.

2. **The MTM3000 Transmitter electrical supply voltage must be between 9-33 Vdc, measured at the transmitter connections.**

   Calculate the minimum supply voltage as follows:

   VMin = VS - (0.02 x RL)

   where: VS = Supply voltage

   RL = Total loop resistance in ohms

3. **The cable is considered an integral part of the sensor. The length has been specified by the buyer. Splicing of the cable is not recommended especially if the splice is below the water level. Reducing the length may be possible but extreme care needs to be taken with the vent tube (see item 1 above). **Consult factory prior to reducing cable length.***

4. **Occasionally, the MTM3000 Series is installed with a sink weight which is suitable for sitting on the tank/well bottom and keeping the sensor above sludge. Instructions for attaching the sink weight can be found on page 3 of this manual.**

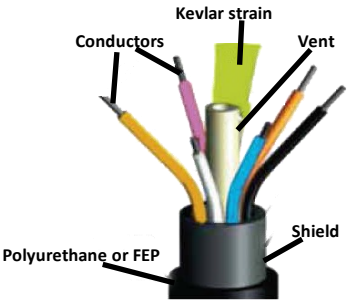

Fig. 4 - Cable Connections

5. **The polyurethane sheathed cable (see fig. 4) incorporates a Kevlar strain relief which has more than 200lbs breaking strength and will not stretch. Therefore, it is acceptable even with the sink weight fitted to lower the sensor into the fluid until it reaches the point where the measurements are to be made from. If the sink weight is fitted and the sensor is to rest on the bottom of a tank/well then the cable only needs to be fixed above the surface. If the sensor is to be positioned above the bottom then it is preferable to attach it to a fixed object to avoid movement especially when agitators are nearby.**

   PMC offers the CH 10 cable hanger to support the sensor and cable at the surface - see page 4.

6. ***It is important that the cable is terminated within an enclosure that maintains clean, dry air environment.*** **PMC can supply and recommends the Termination Enclosure TE-11 which provides electrical terminations and MP-11 Moisture Protection Reference Volume into a single box for zero maintenance. See page 5.**

7. **After connecting the wires, visually inspect the top of the nylon vent tube to make sure it is clean and not blocked or damaged.**

8. **Clamp the cable and attach at the datum reference point with a clamping device. Make sure that there is no cable movement and no damage of the internal nylon vent tube in the cable structure.**

   Note: The maximum bend radius for the polyurethane cable is 1½" if bent more sharply the reference tube in the cable may kink causing measurement errors.

9. **Switch on the power supply and make sure that an applicable output signal from the sensor is received by the signal conditioning system.**

Calibration

This sensor was originally factory calibrated and then permanently sealed. Therefore, no adjustments to the sensor can be made. The long term stability (drift) of the sensor is ~0.1%/year (in typical conditions). This means that if the sensor is shipped as a 0.1% static accurate device, after year one the accuracy will have drifted to ~0.2%, after year 2 it will have drifted to ~0.3% and so on. PMC can evaluate this sensor to ensure its performance is within the expected range. While there is no adjustment on the sensor itself, knowing the sensors drift allows you to program offsets in your SCADA control to "Calibrate" the system.

Accessories

See the following pages for our wide range of accessories and variants.

Sink Weight MTM3000 Installation Instructions

The design uses a Delrin couple to attach the roughly 8” long x 0.390 diameter Stainless Steel weight to the end of the titanium sensor. The Delrin acts to isolate the two metals. The device would roughly double the total weight, which in reality would still be much less than 1-pound.

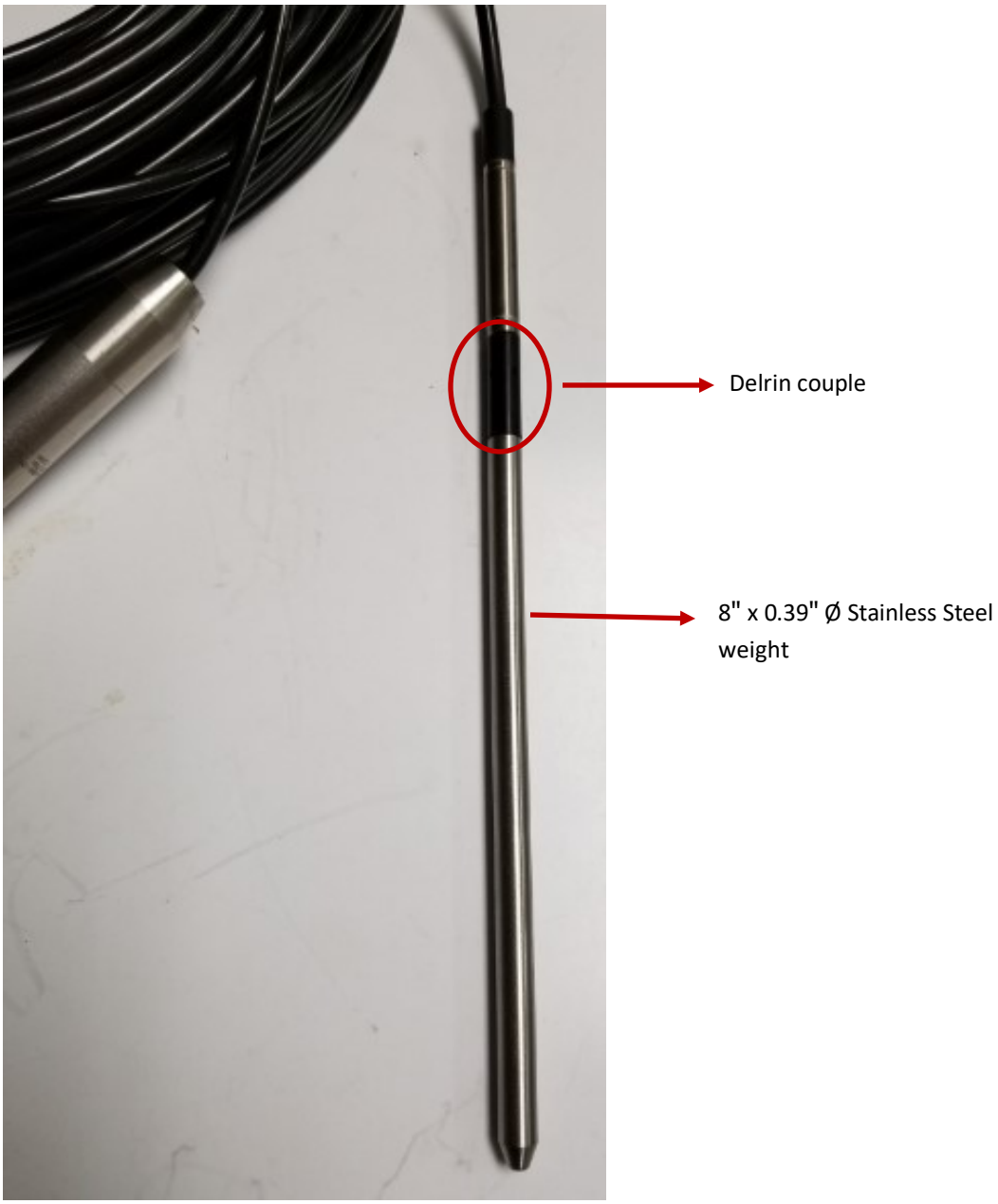

Cable Hanger CH-10 Installation Instructions

The CH-10 cable hanger is designed to be positioned at any point along the cable supporting PMC depth/level transmitters. The polycarbonate inserts should be pulled to their widest point. The cable then is placed within the inserts. When the cable is pulled it will be gripped by the inserts and provide the strength to hold up to 200lbs. PMC also offers a Stainless Steel version.

Note: It may be necessary to tap on the insert to achieve the grip.

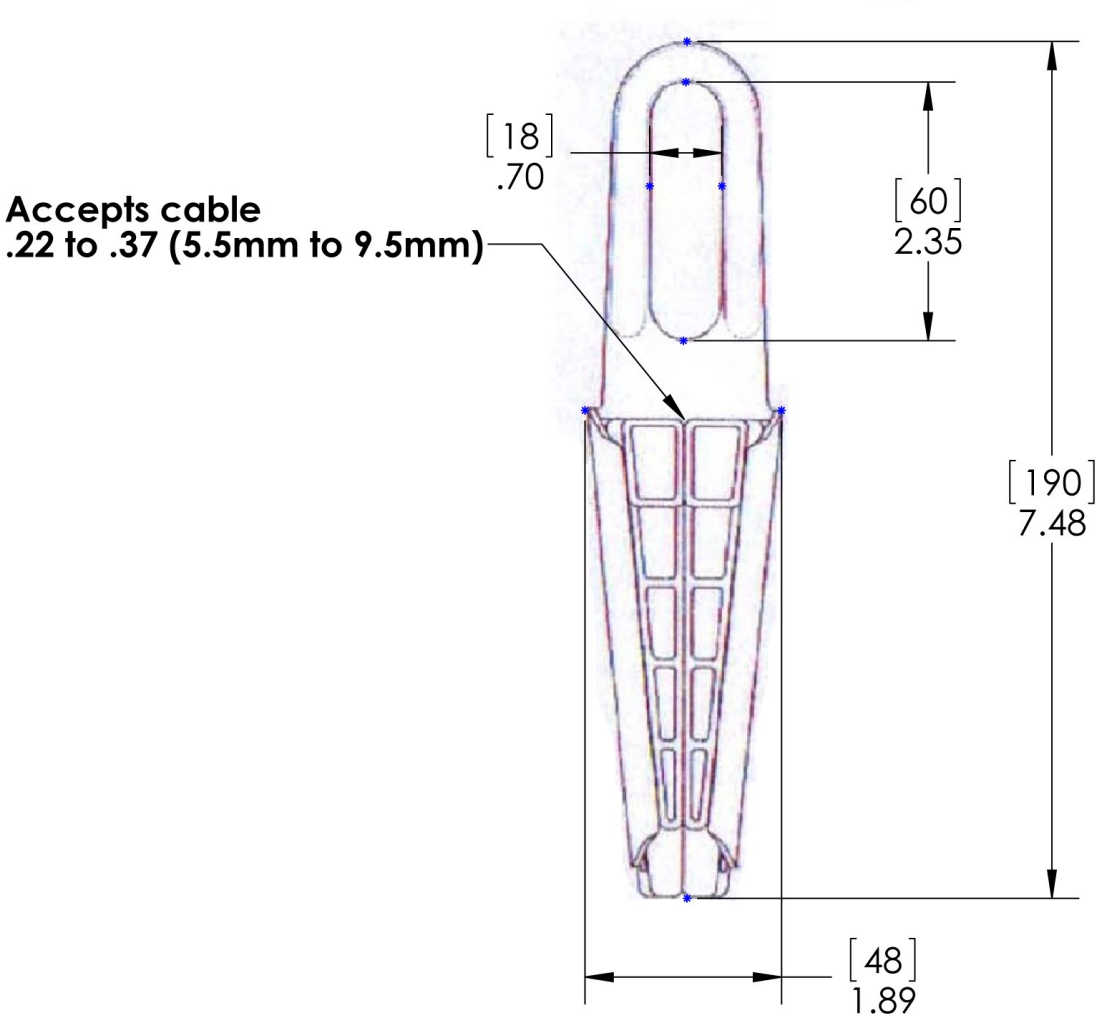

TE-11 Installation Instructions

The TE-11 is a low maintenance termination enclosure for connecting to a pressure sensor in the field or an uncontrolled industrial environment. With the TE-11 the sensor cable is connected to a DIN terminal strip and the reference tube is connected to the MP-11 inside the enclosure.

Installation

1. **Determine the best location near the sensor for mounting the TE-11.**
2. **If the TE-11 is outdoors or in a location where it will get sprayed with water then the enclosure must be mounted with the cable glands and vent facing down.**
3. **Mount the TE-11 using the mounting lugs protruding from the back of the enclosure.**

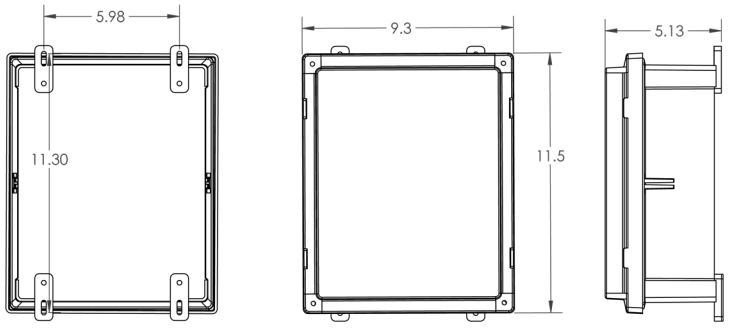

4. **Remove the lid of the TE-11 and feed the extension lead through the cable gland on the right. Please note to accommodate a variety of customer cables there is a clear tube installed in the cable gland. If your cable is too large to fit into the clear tube then remove and install the cable into just the cable gland. (cable diameter range .150-.300 with clear tube, .230-.546 without clear tube)**
5. **Attach the extension leads to the appropriate DIN terminal connections.**
6. **Feed the sensor cable through the cable gland on the left and attach the sensor leads to the appropriate DIN terminal connections.**
7. **Use the supplied flexible tubing and join the reference tube in the sensor cable to the barbed fitting on the MP-11 inside the enclosure.**
8. **After the cables are in place tighten both cable glands until the cables are tight and do not move.**
9. **It is recommended that you seal both the end of the sensor cable and the extension lead with some RTV. This will reduce the internal volume of the TE-11 and keep external air/humidity from coming in through the extension lead.**
10. **To help reduce contact corrosion there is a desiccant module (DM-10) supplied that fits behind the nameplate on the TE-11 lid. Remove the DM-10 from the package and install into the TE-11 lid with the DM-10 window aligned with the hole in the nameplate. (see fig. 1) Because there should be very little exchange of air in the TE-11 the DM-10 should last a minimum of 12 months in typical environments.(DM-10 window changes from blue to pink). (see fig. 2) Contact PMC for replacement DM-10 as required.**
11. **Once everything is installed place the lid on the enclosure and tighten into place. Do not tighten each screw completely in. Tighten each screw approximately half of the way in and alternate corners. (See following page) Now go back and tighten each screw all the way and again alternate corners.**

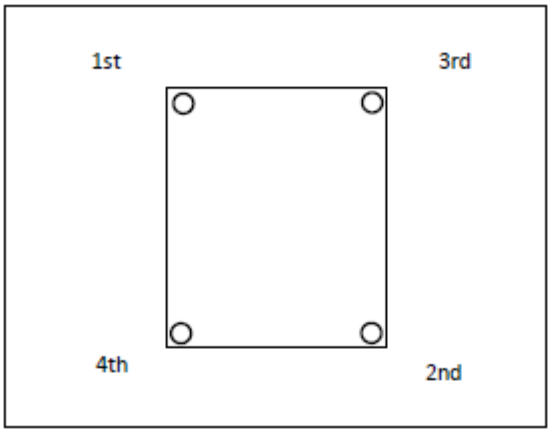

12. The TE-11 installation is now complete.

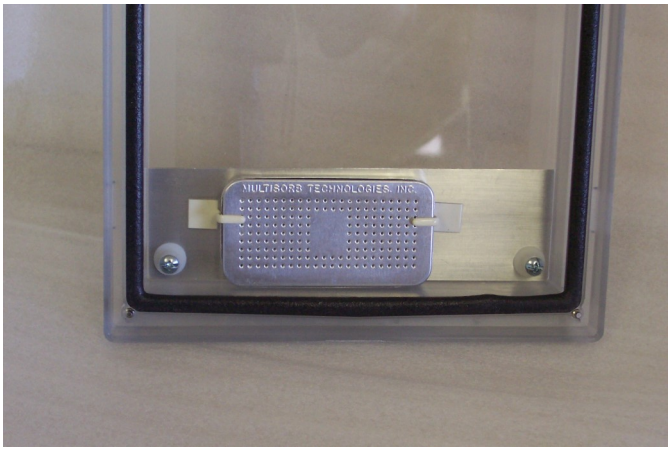

Fig. 1 – DM-10 installed in TE-11 lid.

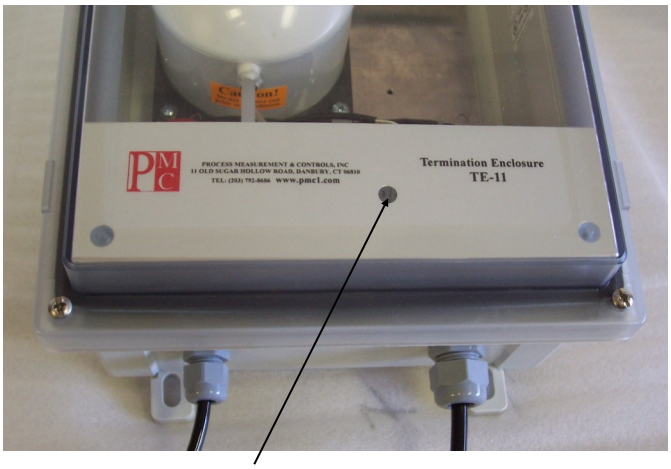

Fig. 2 - DM-10 indicator window

Installation Instructions
Surge Protector DLU & DLU2

Line Connection
The DLU (1-pair) or DLU2 (2-pair) surge protector must be linked in series on the line to be protected (see diagram) by screw terminal in input and output.
Gauge wire : from 0.2 to 1.5 mm²

Bonding network connection
Minimum gauge of the Earth wire : 1,5mm².

Box fitting
On symmetrical 35 mm DIN rail (EN 50022).

Housing Material
Yellow polycarbonate UL94V-0

Installation recommendation

Basic rules
- The way line/equipment has to be respected (see diagram)
- Imperative connection to the bonding network
- Proper selection of the protection model has adapted to the type of protected line.
- Physical seperation between protected wires and non protected wires in order to limit couplings.

Earth connection
- Minimum gauge of the earth connection cable : 1.5 mm²
- The length of this wire (between surge protection and bonding bar) must be shorter as possible (< 0.50 m).
- If the DLU (or DLU2) is installed on a DIN rail correctly connected to the bonding network, its connection to the bonding is automatically performed and the connection by wire is not necessary.

Shield management
If the protectted line is shielded, the shield wire must be connected to the relevant screw terminals in/out : by this way, the shield will be transmitted and protected (feature only on DLU version) . See diagram .

Location
The surge protection box unit, in general, installed at the entrance of the installation, (connection box to external network), but regarding these following point :
- Risk of surge voltages inside the installation (coupling with the AC network, switching transient voltages, switching overvoltages ...).
- Remote location of the equipment to be protected (> 30 m)
In these cases, an installationnear the protected equipment is recommended.

Maintenance
The DLU unit is maintenance free.
Following operation on transient overvoltage, the unit goes back into his initial state.
Otherwise, 2 cases of definitive destruction can happen :
-Transient energy greater than the protection specifications (i.e. : following a "lightning" impact very close, the waveshape exceed 20 kA)
- Failure on a long duration overvoltage (i.e. : direct contact between the transmission line and AC voltage line).
In these two cases, the protection will go into short circuit to earth, warning the user about the trouble : this one will have to replace the protection.

CITEL part number	DLU-24D3
Typical Application	4-20 mA Liaison 24 V
Configuration	1 paire + blindage/ shield
Max. line voltage(Uc)	24 V
Max. line current	300 mA
Protection level (Up) 8/20µs impulse - 5 kA	40 V
Nominal discharge current (In) 8/20µs impulse - 10 times	5 kA
Max. discharge current (Imax) 8/20µs impulse - 1 time	20 kA
End of life	Court-circuit/ Short circuit

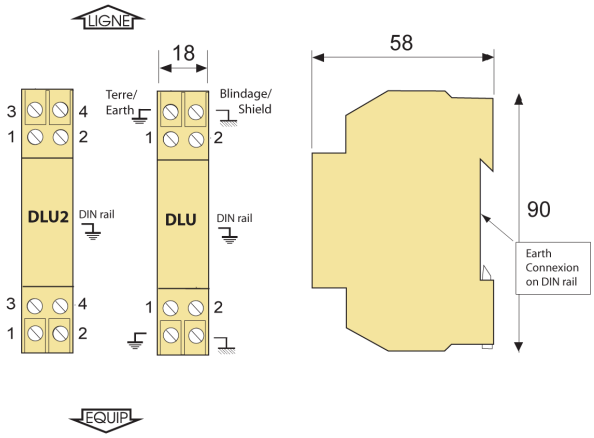

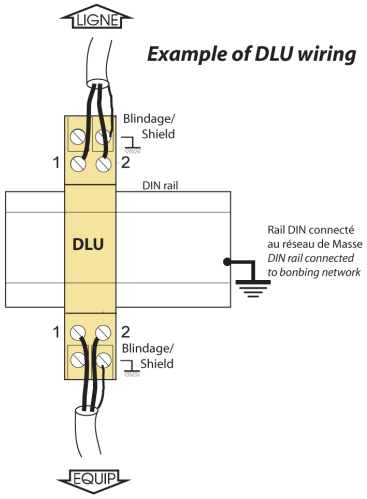

Cable termination practices for submersible pressure/level transmitters

Background:

A properly constructed submersible transmitter is a highly reliable product, which will last many years in service, perhaps even a decade or more. Correct installation is key to long term survival however, and the number one cause of premature failure is improper installation.

Vented Cable:

Most submersible transmitters rely on a vented cable to properly "reference" the sensor to atmospheric pressure. The vent ensures that the transmitter measures only the pressure caused by the head of fluid, and not changes in atmospheric pressures caused by weather or by installations at differing elevations.

While a vented transmitter offers considerably better accuracy than sealed types of sensors, care must be taken to properly terminate the vented cable. Moisture entering the cable through the vent tube, and in some cases moisture wicking into the cable between the conductors, can severely affect reliability and service life.

Terminating the cable:

Whenever possible, the process of trimming and terminating the cable should be done under dry conditions. When cable termination must be done under rainy or wet conditions, care should be taken to keep the end of the cable sealed and dry until it is placed in a protective enclosure such as a **TE-10** Dri-Box.

Moisture damage protection:

Moisture (including humidity) is prevented from entering the vent tube by one of two methods. The most common method involves the use of a desiccant, either in the form of an in-line cartridge (**MP-10**) or a desiccant pack built into an enclosure (TE-10). The second method uses a sealed reference volume (**MP-11**) which comes pre-filled with dry nitrogen. The sealed volume approach means that no outside air enters the vent system, making this approach maintenance free.

The TE-10 enclosure has the added advantage of protecting both the vent tube and the exposed end of the cable. This means that, provided the desiccant packs are replaced periodically, no appreciable moisture will ever enter through the vent tube or around the conductors.

Sealing the cable:

If the MP-10 or MP-11 approaches are used, the exposed end of the cable must be sealed with silicone RTV or a similar sealant, and protected from weather to the greatest extent practical.

The most reliable installation results when the MP-11 is used in conjunction with TE-10 or similar enclosure. In this configuration the MP-11 provides a dry, maintenance-free termination for the vent tube, and the TE-10 provides a moisture proof enclosure that protects the stripped end of the cable.

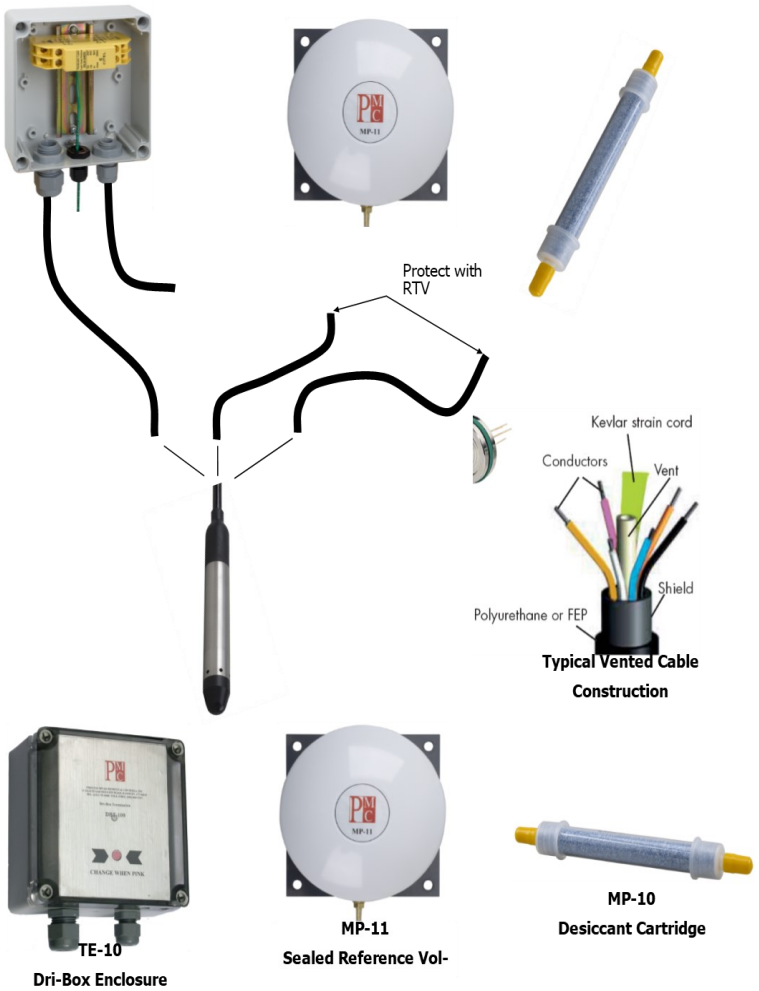

PMC VersaLine® Transmitter Wiring for MTM3000
Applicable to all loop-powered 4-20mA VersaLine® products

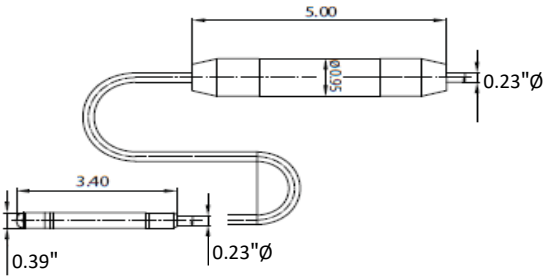

Cable connection details for installer - Electrical Only

* Important: See separate Application Note describing proper mechanical cable termination methods to prevent moisture ingress.

4-20mA output with in-line Electronics module

The transmitter will function with only the White and Yellow wires connected, but proper connection of the Green and Drain wires minimizes the chance of errors resulting from electrical noise (RFI) superimposed on the signal.

White	: Connect to supply +
Yellow	: Connect to signal measurement equipment leads (supply -)
Green	: Optional - Connect to independent earth ground
Pink, brown, grey	: Optional - Connect to negative supply (black wire)
Drain (silver/uninsulated)	: Spares / not used
All other colors	

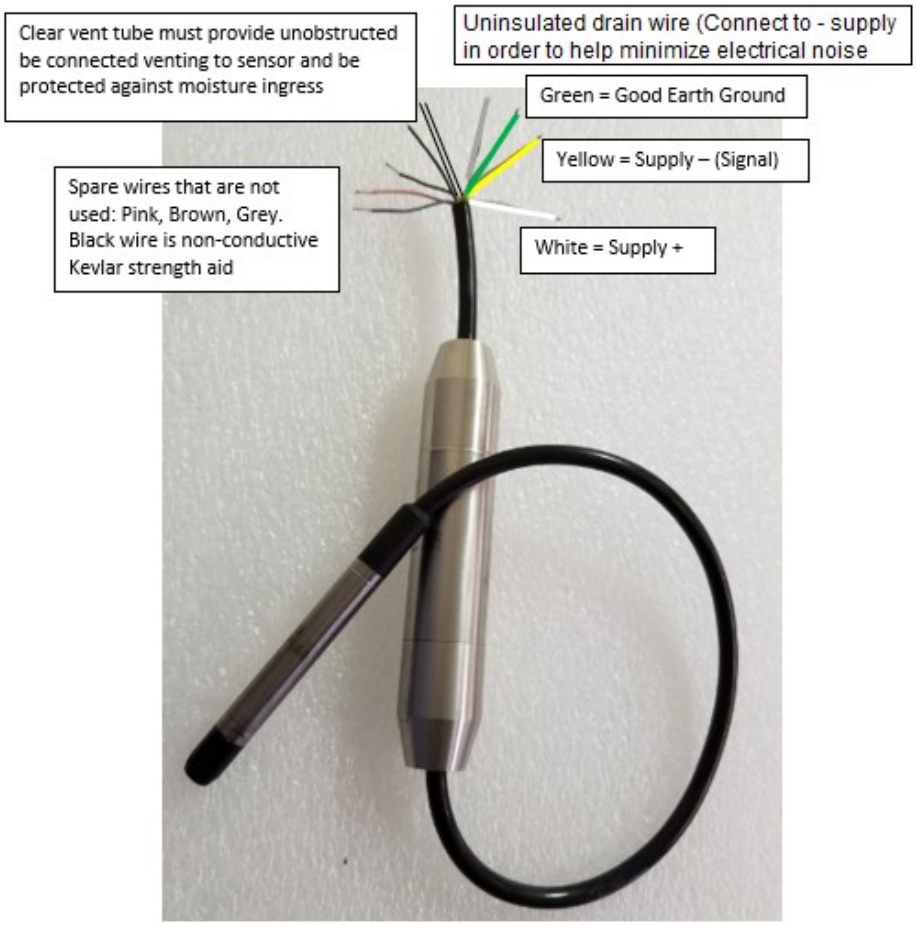

PMC VersaLine® Transmitter Wiring for MTM3000 with TE-11c

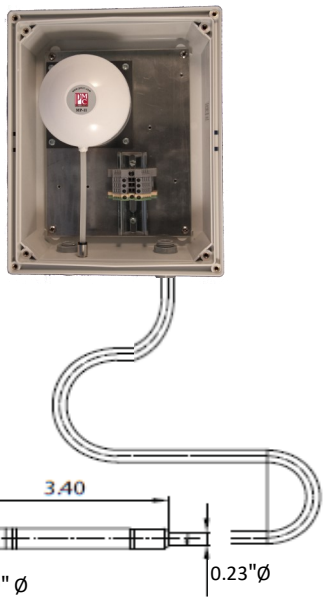

4-20mA output with Remote Electronics mounted in TE-11c

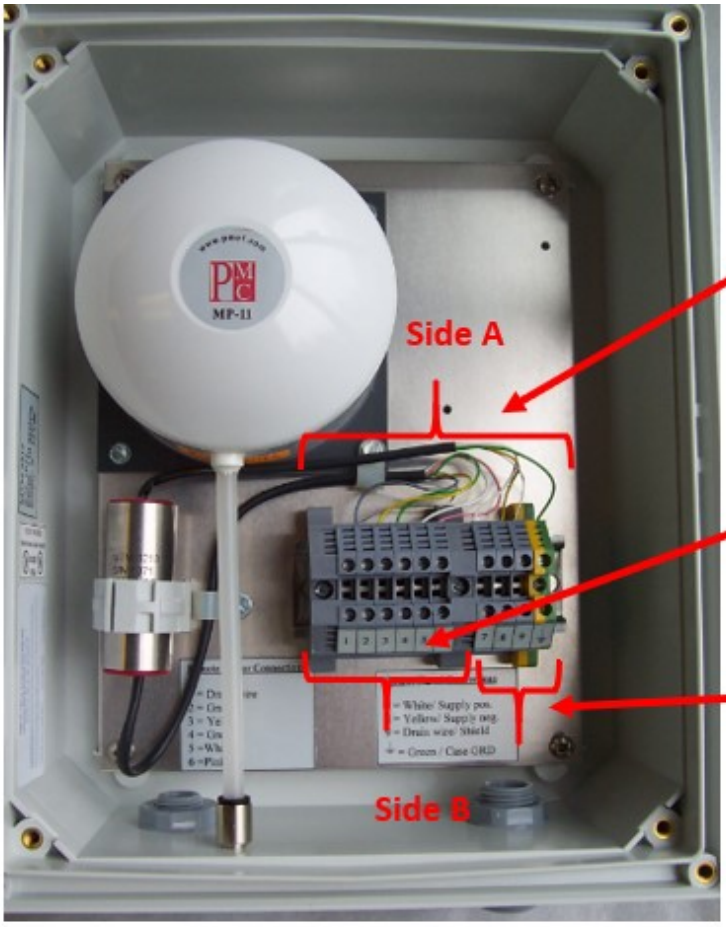

This side (A) is "hard-wired" from the factory (PMC)

Customer connects wires to terminals 1-6 of side B that are of the same color as the wire on side A for each individual terminal

Customer connects wires from their power supply (including ground & drain) to terminal 7, 8 & 9 of side B

Please note that there are wiring labels inside of the TE-11c.

Wiring may be different if accessories such as surge protector, Zener barrier or loop powered display are provided; however, each TE-11 does have relevant wiring labels inside to assist with making the connections.
Wiring for other output configuration available on request.

PRESSURE TRANSDUCER

(STRAINER OUTLET PRESSURE)

Specification Section 13410
Drawing EI 685

KPSI (TE Connectivity)
Model 27S1420A100.000000.000B10020A

Calibration: 0-100 PSI

23 Old Dock Road • Yaphank, NY 11980 • Tel: (631) 924-1315 • Fax: (631) 924-1012



KPSI 27

- Non-Submersible Pressure Transducer
- ±0.25% FSO Static Accuracy
- Multiple Pressure Connections
- Two Year Warranty

The KPSI 27 is a non-submersible pressure transducer specifically designed for demanding industrial applications where the primary criteria are reliability and economy. These units provide repeatable, precision measurements under the most hostile conditions. Capable of measuring vacuum to pressure as high as 2000 psi (13,790 kPa), these transducers can meet most any industrial pressure measurement requirement and are available with an overmolded cable exit option for splash down applications (IP 67).

All KPSI Transducers utilize a highly accurate pressure sensor assembly specifically designed for hostile fluids and gases. The assembly is integrated with supporting electronics in a durable housing constructed of 316SS or Titanium. A wide variety of electrical and pressure connections are available to accommodate most any system interface.

Features

- Custom Cable Lengths
- Welded 316SS or Titanium Body
- Custom Pressure Ranges up to 2000 psi
- Analog Outputs of 4-20 mA or VDC
- Optional Lifetime Lightning Protection

Applications

- Tank Level
- Pump Control
- Bubbler Systems
- Compressors

Specifications

PARAMETER		COMMENT
PRESSURE RANGES		
Full Scale Pressure Ranges (intermediate pressure ranges are available)	1 thru 300 psi (7 thru 2070 kPa)	Vented Gage Reference
	5 thru 2000 psi (34 thru 13790 kPa)	Sealed Gage Reference
	15 thru 2000 psi (103 thru 13790 kPa)	Absolute Gage Reference
Proof Pressure	1.5 x FS	
Burst Pressure	2.0 x FS	
STATIC PERFORMANCE		
Static Accuracy (combined effects of non-linearity, hysteresis and repeatability, best fit straight line method)	±0.25% FSO	BFSL method
Resolution	+0.0001% FS	

ENVIRONMENTAL		
Wetted Materials	316 SS or Titanium; FKM; Polyurethane or ETFE	
Compensated Temp Range	0 to 50ºC	
Thermal Error (maximum allowable deviation from the Best Fit Straight Line due to a change in temperature)	±0.05% FSO/ºC ±0.1% FSO/ºC	Worse case over compensated temperature range for ranges < 5 psi (34 kPa)
Operating Temp Range	-20 to 60 ºC	
Protection Rating	IP 67	When the overmold option (0) is ordered
ELECTRICAL		
Excitation	9-28V – VDC output 9-28V – mA output 15-28V – VDC output 10-28V – VDC output	0-5V, 0-2.5V, 0-4V 4-20 0-10V 1.5-7.5V
Input Current	20 mA max, 3.5 mA max	For mA output, for VDC output
Output	4-20mA, 0-5 VDC, 0-2.5VDC, 0-4VDC, 0-10VDC, 1.5-7.5VDC	For ranges > 100 psi (690 kPa) only 4-20mA output is available
Zero Offset	±0.12 mA for mA output < 0.25 VDC for VDC output	
Output Impedance	See loop diagram for mA output 20 ohms for VDC output	
Insulation Resistance	100 mega ohms at 50 VDC	
Circuit Protection	Polarity, surge/shorted output	
CERTIFICATIONS		
	CE compliant	EN 61326-1:2013 and 61326-2-3:2013
	UL, CUL and FM	Class I, II, III, Div. 1, Groups A,B,C,D,E,F&G
	WEEE/RoHS	Waste from Electrical and Electronic Equipment (WEEE) and Restrictions on the use of Hazardous Substances (RoHS)
PHYSICAL		
Approximate Weight	0.44 lbs. (198 g) transducer 0.05 lbs./ft. (79 g/m) cable	
TEMPERATURE OUTPUT OPTION (not intrinsically safety approved)		
Temperature Range	-20 to 60ºC	Available for 4-20mA output versions only
Output Signal	4-20mA	
Temperature Measurement Accuracy	±4ºC	
LIGHTNING PROTECTION (power supply needs to be limited to 150mA to avoid lock up of the gas tube after a suppression event)		
Life Expectancy	>1,000 Operations	
Peak Clamping Voltage	36 Volts	
Response Time	<10 nsecs	
Shunts	20,000 Amperes	

0-100 PSI = 4-20 mA

Dimensions

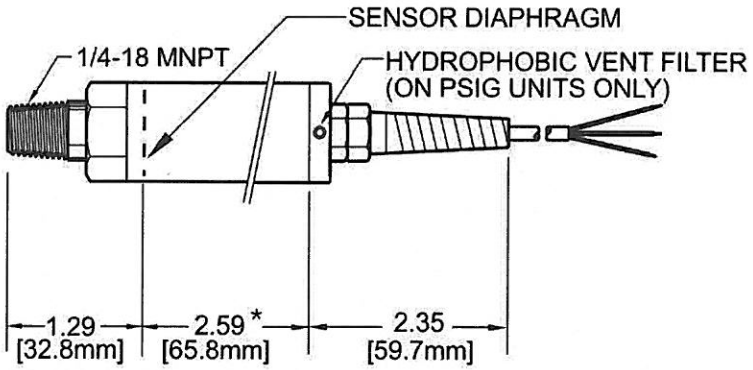

*ADD 2.95 FOR LIGHTNING PROTECTION OPTION

Strain Relief - PVC Cable

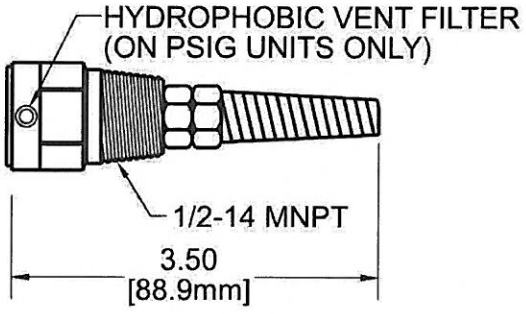

Strain relief with ½" Conduit Fitting

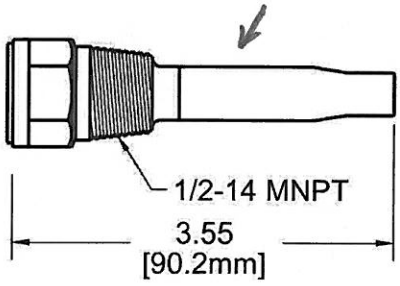

Molded Cable Seal with ½" Conduit Fitting

Electrical Termination

ELECTRICAL TERMINATION		
22AWG CONDUCTORS IN A SHIELDED CABLE WITH VENT TUBE		
4-20 mA	RED	+ EXCITATION
	BLACK	- EXCITATION
0-5 VDC	RED	+ EXCITATION
	BLACK	- EXCITATION
	WHITE	+ SIGNAL
ALL	DRAIN WIRE	SHIELD

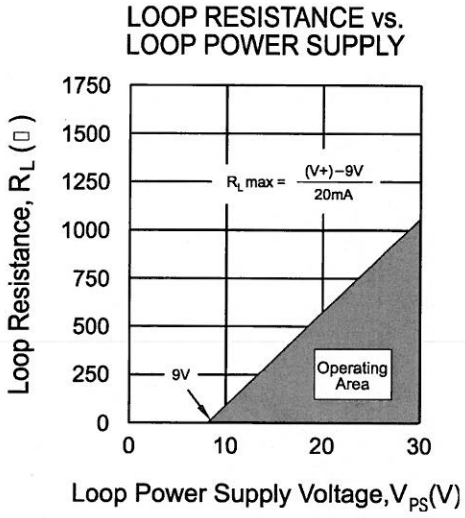

Ordering Information

MODEL	INDUSTRIAL PRESSURE TRANSDUCER
27	±0.25% FSO Static Accuracy

MATERIAL
- S Stainless Steel ←
- T Titanium

REFERENCE PRESSURE FORMAT
- 1 Vented gage ←
- 3 Sealed gage
- 4 Absolute

OUTPUT
- 3 0-5 VDC
- F 0-2.5 VDC
- G 0-4 VDC
- H 0-10 VDC
- J 1.5-7.5 VDC
- 4 4-20 mA ←
- 6 4-20 mA, temp. measurement option, -20 to 60ºC (not IS approved)

PRESSURE CONNECTION
- 1 1/4" - 18 NPT female fitting
- 2 1/4" - 18 NPT male fitting ←
- 7 1/2" - 14 NPT male fitting

ELECTRICAL CONNECTION
- 1 Strain-relieved cable with flying leads
- 4 Strain-relieved with 1/2" - 14 NPT male conduit fitting
- 0 Molded Cable Seal with ½" – 14 NPT male conduit fitting (300 PSI MAX) ←
- A Gland Seal
- B Gland Seal with ½" – 14 NPT male conduit fitting

LIGHTNING PROTECTION
- A None ←
- B Full Lightning Protection

PRESSURE RANGE (at MAX output)[1,2]
. # #

PRESSURE RANGE (at MIN output)[1]
. # #

MOISTURE PROTECTION
- A None
- B Vent Filter
- D Stainless Steel Vent Filter

CABLE TYPE
- 1 Polyurethane (Connection 0. A, or B Only)
- 2 ETFE – (Electrical Connection A or B Only)
- 3 PVC Jacketed – (Electrical connection 1 or 4 Only)

CABLE LENGTH
(in feet)

LABEL[3]
- A psi
- B kPa
- C mbar

27	S	1	4	2	0	A	10	0	.	0	0	0	0	0	0	.	0	0	0	B	1	0	0	2	0	A

Notes:

1 The part number requires two pressure range limits, corresponding to the maximum and minimum analog outputs of the transducer, to be specified in pounds per square inch (psi) to three decimal places. The lower pressure range is typically 000.000 unless otherwise required. For reverse output requirements, enter the lower pressure range for the maximum output signal and the upper range for the minimum output. **Example: 50 psi (enter 050.000)**
For sealed gage reference add local standard atmosphere (14.700 typical). Contact MEAS for assistance. **Example: 150 psi + 14.700 = 164.700 (enter 164.700)**

2 For pressure ranges >=1000 psi should be expressed in the format (xxxx.xx)

3 Units of measure on standard MEAS label. Contact Measurement Specialties if private labeling is required.

NORTH AMERICA
Measurement Specialties, Inc.
a TE Connectivity Company
Tel 800-522-6752
customercare.hmpt@te.com

EUROPE
Measurement Specialties (Europe), Ltd.,
A TE Connectivity Company
Tel 800-440-5100
customercare.dtmd@te.com

ASIA
Measurement Specialties (China), Ltd.,
a TE Connectivity Company
Tel 0400-820-6049
customercare.shzn@te.com

TE.com/sensorsolutions

Measurement Specialties, Inc., a TE Connectivity company.

Measurement Specialties (MEAS), American Sensor Technologies (AST), TE Connectivity, TE Connectivity (logo) and EVERY CONNECTION COUNTS are trademarks. All other logos, products and/or company names referred to herein might be trademarks of their respective owners.

The information given herein, including drawings, illustrations and schematics which are intended for illustration purposes only, is believed to be reliable. However, TE Connectivity makes no warranties as to its accuracy or completeness and disclaims any liability in connection with its use. TE Connectivity's obligations shall only be as set forth in TE Connectivity's Standard Terms and Conditions of Sale for this product and in no case will TE Connectivity be liable for any incidental, indirect or consequential damages arising out of the sale, resale, use or misuse of the product. Users of TE Connectivity products should make their own evaluation to determine the suitability of each such product for the specific application.

© 2017 TE Connectivity Ltd. family of companies All Rights Reserved.

KPSI®

Level Transducers



KPSI® User's Manual

20th Edition

February 2012

Table of Contents

1.0 Product Description 2
General Characteristics 2
Care and Handling 2
Calibration 2
Approvals 3
2.0 Product Accessories and Options 4
Nose Caps 4
810 SuperDry™ Vent Filter or 815 Aneroid Bellows 5
Sacrificial Anode 5
Absolute/Sealed Gage Transducer 6
Polyurethane & ETFE Jacketed Cable 6
Lightning Protection 8
½" Male NPT Conduit Fitting 9
Electrical Outputs 9
Reverse Signal Output 10
Temperature Output 10
Cable Hanger 10
Submersible Cable Splicing Kit 12
3.0 Installation & Maintenance Tips 13
General Installation Procedures 13
Transducer Anchors 13
Transducer Submersion 14
SuperDry™ Vent Filter or 815 Aneroid Bellows 14
Cable Protection 15
Bending of Cable 15
Cable Compression 15
4-20 mA Output Wiring 15
VDC Output Wiring 16
Model 750 16
Sealed-Gage Transducer Above Sea Level 16
Transducer Position Sensitivity 17
General Maintenance Tips 18
Desiccant Maintenance 18
Clogged Nose Piece or Dirty Diaphragm 18
Cleaning Your Transducer 19
4.0 Warranty and Product Return Procedures 22
Restocking Policy 23

Appendix A Drawings and Diagrams 25
Appendix B Frequently Asked Questions 29
Appendix C Field Checkout & Troubleshooting Techniques 34
Appendix D Calibration Calculations 50

1.0 Product Description

General Characteristics

KPSI™ Level and Pressure Transducers use isolated-diaphragm sensors that are specifically designed for use with hostile fluids and gases. These sensors utilize a silicon pressure cell that has been fitted into a stainless steel or titanium package with an integral, compliant stainless steel or titanium barrier diaphragm. This sensor assembly is housed in a rugged 316 stainless steel or titanium case which provides for a variety of level ranges from 2.3 ft (0.75 m) H_2O through 4614 ft (1408 m) H_2O and pressure inputs from 0-1 (7 kPa) through 0-15000 psi (103 mPa). Our devices feature internal signal conditioning. Standard outputs are 4-20 mA and VDC.

All units containing active electronic components have surge and reverse polarity protection. For ease of use in the field, our transducers are permanently laser engraved with our logo and name, wiring information, part number (P/N), serial number (S/N), date of manufacture (DOM), range, excitation and output. Transducers are offered in diameters of 1.0 (25 mm) and 0.75 inches (19 mm).

Care and Handling

Our transducers are designed for rugged use. However, they need protection from over pressure and sharp impact. When lowering them into a liquid, penetrate the surface slowly and only to the depth necessary. Avoid dropping the unit from above the surface. Clean all transducers by rinsing them in a mild detergent. Direct probing of the diaphragm or attempts to remove protective screens will damage the sensor, voiding the warranty.

Calibration

All transducers are shipped with calibration information unique to each transducer. Make sure you keep each calibration report. However, should you misplace your calibration sheet, you can contact the factory and request a duplicate. All KPSI™ Transducer calibrations are traceable to the National Institute of Standards and Technology (NIST).

Approvals

Most of our products have UL and FM certification for intrinsic safety. Their respective installation control drawings can be downloaded from our website. Several of our product lines also carry ABS approval. Most products are CE compliant to EN 61326-1:2006 and EN 61326-2-3:2006. CE compliant units are labeled accordingly.

These units are designed for installation in a Class I, Division 1, Groups A, B, C, and D, Class II, Division 1, Groups E, F and G, Class III, Division 1 hazardous location when connected to appropriate apparatus such as those manufactured by R. G. Stahl, Inc., and others.

2.0 Product Accessories and Options

WARNING: POTENTIAL ELECTROSTATIC CHARGING HAZARD

In hazardous locations:

- **Avoid building up static charge on case of data protector and plastic accessories.**
- **Use damp rag to wipe data protector and plastic accessories to avoid static build up.**

Nose Caps

There are several different user-installable nose caps for the 700, 710, 720, 730, 735 submersible level transducers. The ported nose cap (Delrin) with #8-32UNC-2B threaded hole is best used where weights are required and for those installations where users may encounter sharp, protruding objects. The open-face nose cap which allows maximum contact with the liquid media is ideal for wastewater and "greasy" applications where clogging of the sensor is a concern. The piezometer nose cap allows the unit to be buried in saturated soil without damage to the sensor diaphragm. The 1/4" male NPT pressure nose cap is not only useful for calibration purposes but also allows the device to be used as a submersible or above ground pressure transducer.

WARNING: Caution must be exercised when inserting a screw into the nose cap as the maximum insertion length should not exceed 0.175".

810 SuperDry™ Vent Filter or 815 Aneroid Bellows

All submersible transducers with vented gauge format are supplied with a protective barrier that guards against moisture buildup in the cable vent tube. The 810 SuperDry™ vent filter is installed free of charge and is guaranteed to operate maintenance free for one year. We also offer the 815 Aneroid Bellows as a maintenance free option that can be used on submersibles with accuracies of: ±1%, ±0.5%, or ±0.25% FSO. These barriers ensure reliable operation and long life as they protect sensitive electronic components from mildew and prevent the formation of a liquid column in the vent tube. Any such liquid column directly affects calibration of the transducer.

Sacrificial Anodes

Our sacrificial anodes are made from a special zinc alloy formulated to guarantee continued effectiveness over long periods. Because the anodes are 95% galvanic, they will not corrode unless there is an electrolytic demand. The anode maintains a high driving potential throughout its 12 month life, is self-sluffing and always exposes new zinc for the best possible protection. For those applications where cable buoyancy is a problem, the sacrificial anode can be substituted for hanging weights.

Sacrificial Anodes provide cathodic protection against galvanic corrosion for our submersible pressure transducers. Galvanic corrosion occurs when dissimilar metals are placed in contact with an electrolyte. This condition causes a potential difference to exist between the two metals, causing electron flow between them. Corrosion of the less corrosion-resistant metal is increased and attack of the more resistant metal is decreased. The 820 Sacrificial Anode is clamped to the exterior of a one-inch bore submersible transducer. We

also offer a 1" diameter pencil anode, the 825, that attaches to the nose cap of either a 3/4" or 1" bore submersible transducer.

Absolute/Sealed Gage Transducer

The sealed gage option for submersible transducers eliminates the need for a vent filter. The standard output of a sealed gauge transducer is 4 mA at 14.70 psia. Before ordering a sealed gauge transducer, the customer should determine the altitude (above sea level) of the installation and inform Customer Service of this value before order entry. During manufacture, the output of the transducer will be adjusted to compensate for the altitude difference, if applicable.

Polyurethane & ETFE Jacketed Cable

Most installations of our submersible level transducers connect our polyurethane or ETFE cable to a junction box. From this junction box (P/N 840), users typically run their own cable to the required instrumentation. Polyurethane-jacketed cable is used for most applications while ETFE material is recommended for more aggressive environments.

Specifications for our standard polyurethane and ETFE jacketed cable are as follows:

Specifications	Standard Submersible Cable	Standard Non-Submersible Cable
Weight	0.05 lbs/ft (0.07 kg/m)	0.025 lbs/ft (0.035 kg/m)
Min. OD	0.28" (7.10 mm)	0.189" (4.8 mm)
Max OD	0.31" (7.87 mm)	0.19" (4.9 mm)
Conductors	4 - 22 AWG	22 AWG
Insulation Conductors Outer jacket	PVC Polyurethane or ETFE	Color coded PVC
Shield	36 gauge spiral tinned copper wire foil shield with drain wire	Aluminum/polyester foil facing outward
Vent Tube	Polyethylene, .060" ID (1.52 mm)	Drain wire 7/32 tinned copper

- **Chemical resistance of polyurethane:** Potable Water, Wastewater, Borax, Butane, Animal Fat, Carbonic Acid, Citric Acid, Cod Liver Oil, Corn Oil, Glycerin, Glycol, Mineral Oils, Potassium Nitrate, Potassium Sulfate, Silicone Oils, Stoddard Solvent, Tannic Acid (10), Tartaric Acid, Turbine Oil.

- **Chemical resistance of ETFE:** Acetic Acid (Glacial), Acetic Anhydride, Acetone, Aluminum Chloride, Anti-Freeze, Bromine, Calcium Chloride, Calcium Hydroxide, Chlorine, Copper Chloride, Ferrous Chloride, Hydrochloric Acid, Ketones, Lacquer Thinners, Sulfuric Acid.

The vented cable termination end is specially prepared at the factory to eliminate the potential for moisture migration. Where the lead wires emerge from under the jacket, there's potting material and a shrink tube "boot", every effort should be made to leave this feature intact. Should the cable be longer than needed for the installation, it is recommended that the excess length be accommodated in a service loop and that the potted end of the cable **NOT** be shortened.

The cable attached to this instrument is specifically engineered for submersible applications. The polyurethane outer jacket provides long term reliability under most conditions. The cable should be handled carefully, however, as the jacket may be subject to cutting should it be "raked" over extremely sharp edges. To guard against water incursion should an inadvertent minor cut occur, we have incorporated an exclusive "water block" feature immediately beneath the jacket. The cable is fully shielded, with the shield connected to the metal housing at the transducer end and terminated in a drain wire at the termination or user end. The shield should always be terminated to a good earth ground, unless the transducer is installed in an area where galvanic corrosion is known to be a serious problem.

Lightning Protection

Lightning and surge protection for VDC, SDI-12 and 4-20 mA output are available. This is achieved through the use of 2 protectors, one is integral to the transducer housing and one is provided for the outside line located at the surface and grounded to a DIN-Rail. Please remember this option must be factory installed at the time of order entry or as a factory upgrade. **This option cannot be installed in the field.** Lightning protection is also available for unit only. Contact customer service for details.

Featuring quick response and low clamping voltages, these devices protect against fast rising voltage transients as well as severe current surges associated with lightning discharges up to 20,000 amperes. Following a surge, the protector automatically restores the line to normal operation and awaits the next surge without having to reset a breaker or replace a fuse. The power supply needs to be limited to 150 mA to avoid lock up of the gas tube after a suppression event. **Transducers installed with this option have a lifetime warranty *against damage due to voltage surge***.

Please note: When using the lightning protection option on 4-20 mA products, users should take into account the additional series resistance of this option when selecting the loop power supply. This option will increase total loop resistance by 88 Ohms.

½" Male NPT Conduit Fitting

Submersible level transducers can be attached to a rigid conduit and the cable run through the conduit. To achieve this, all of our submersible transducers can be fitted with an optional ½" NPT male conduit fitting (specify "Electrical Connection Option 4" when ordering) where the cable exits the transducer. This fitting can be mated to a standard rigid conduit.

Electrical Outputs

We offer the industry standard 0-5 VDC and 4-20 mA outputs. In addition we also offer a variety of voltage output ranges.

Reverse Signal Output

For some applications, it is important to know how far the water is from the top of the tank or the surface of the ground. If specified by the customer, our factory can set the transducer so that zero pressure reads full scale electrical output and maximum pressure reads zero electrical output.

Temperature Output

A temperature output option is available for most transducers having 4-20 mA pressure output. The temperature sensor requires an excitation of 9-28 VDC and is calibrated for a temperature range of -20 to 60ºC with an accuracy of ±4ºC.

Output Option 6 (4-20mA output for -20 to 60ºC)
(mA Reading x 5) - 40 = Temperature ºC

Example:	Reading is 20mA	(20 x 5) - 40 = 60ºC
	Reading is 12mA	(12 x 5) - 40 = 20ºC
	Reading is 4mA	(4 x 5) - 40 = -20ºC

Cable Hanger

We can supply an optional cable hanger (P/N 12-90-0931) to help end users secure the cable. The cable hanger can be positioned anywhere on the cable by pushing the ends together. Once positioned, the cable hanger expands and provides a snug grip on the cable.

When mounting the transducer in a well casing, the cable hanger can be secured to a hook on the well plate or an eye bolt may be attached to the side of the well casing. The cable hanger loop is then secured to the eye bolt by using any number of types of fasteners. A similar technique can be used when working in stilling wells for

surface water level measurement. In this case, the loop-end of the cable hanger can be attached directly to a screw or bolt bored into the still well shelf.

Submersible Cable Splicing Kit

Our field-installable cable splice kit (P/N 830) allows you to splice polyurethane and ETFE submersible cable. It is most commonly used for well applications where the more expensive ETFE cable is required for suspension in corrosive media where the liquid level is fairly shallow, but the well is hundreds of feet in depth. It is also used in emergency situations where cable must be spliced together to get an application up and running.

3.0 Installation & Maintenance Tips

WARNING: POTENTIAL ELECTROSTATIC CHARGING HAZARD

In hazardous locations:

- **Avoid building up static charge on case of data protector and plastic accessories.**
- **Use damp rag to wipe data protector and plastic accessories to avoid static build up.**

General Installation Procedures

The following is important installation and preventive maintenance information. Our Customer Service or Applications Engineering Support staff can provide additional instruction.

1. **Transducer Anchors:** Most users either suspend our submersible transducers in stilling wells or attach them to rigid conduit. This is done to prevent damage to the transducer from shock caused by water turbulence. It is not advisable to tie your transducer to a pump or to piping, as any problem with the transducer could require that the pump be pulled from the installation. This could prove to be *very expensive*. (Please refer to the Cable Anchoring Schemes drawing in **Appendix A**.)

   Some applications use our optional bracket (P/N 49-06-00PC) to clamp the transducer to a fixed object (i.e., wall, ladder, step) or require the unit to be suspended without any protective still well or attachment device. In all installations, care should be taken to ensure no damage occurs

to the cable.

2. **Transducer Submersion:** Damage to submersible cable is one of the most frequent causes of transducer failure. Lower your transducer into the liquid slowly, making sure the cable does not drag over sharp edges and only to the depth necessary. Avoid dropping the unit from the surface. This does not apply to Series 27, 28, and 30 transducers.

3. **SuperDry™ Vent Filter (Desiccant) or Aneroid Bellows Installation** (For submersible transducers vented gage pressure format only) ***Always*** install a desiccant vent filter or aneroid bellows immediately after transducer installation**.** Failure to use one or the other could result in premature failure of the transducer; which would not be covered by warranty. If you use a desiccant filter, you should establish a regular maintenance schedule. You should change your vent filter when it is 75% spent (pink color). Replacement filters are available at a nominal cost from the factory. Do not remove the old vent filter until a new one is available. The most common failure mode of our transducers is moisture and corrosion damage due to lack of use or maintenance of the vent filter. This will allow air into the desiccant filter and allows the transducer to properly vent with changes in barometric pressure.

   To install/replace either the aneroid bellows or the vent filter, simply unplug the old unit from the vent tube and plug the 0.062" x 1" stainless steel connector tube (supplied with each filter or bellows) into the vent tube. (Installation and

mounting instructions are supplied with each aneroid bellows and vent filter.) The diagram on page 16 shows typical vent filter and aneroid bellows hookups.

4. **Cable Protection** An inexpensive way to protect the cable from damage is to order the submersible pressure transducer with a ½" conduit attachment. Connect an inexpensive flexible 5/8" garden hose to the ½" conduit fitting with an equally inexpensive female PVC ½" NPT x 3/4" NHT swivel fitting, available at your local hardware store

5. **Bending of Cable** Our polyurethane and ETFE jacketed cables are quite flexible. Care needs to be taken to ensure that when bending the cable to suit your installation you do not crimp the vent tube inside the cable. Consequently, do not bend the cable more than a radius of 1 inch.

6. **Cable Compression** Many users require a compression fitting to secure our ETFE and polyurethane jacketed cable as it enters a junction box. Care needs to be taken that you do not over-tighten the fitting so as to damage the cable.

7. **4-20 mA Wiring** When connecting a 2-wire 4-20 mA transducer to a typical power supply and mA meter, verify that the meter has an input impedance of at least 10 Ohms. If you are unsure of the input impedance, then a 10 Ohm resistor may be placed in series with the meter and transducer. Connect the + (red) lead of the transducer to the + terminal of the power supply. If the 10 Ohm resistor is required, connect it to the - (black) lead of the transducer. Use a short

length of 22 AWG or heavier wire to connect the + terminal of the meter to the resistor (if it is required) or the - (black) wire of the transducer. Connect the - terminal of the meter to the - terminal of the power supply with a length of 22 AWG or heavier wire. Connect the drain wire from the transducer to a good earth ground. (See **Appendix**, page **14** for wiring diagram.) Please refer to "**Maximum Cable Lengths and Minimum Supply Voltage**" in **Appendix C**, page **22** to verify minimum loop supply voltage requirements.

8. **VDC Wiring** To connect a 3 wire VDC output transducer to a typical power supply and the voltmeter, connect the - terminal of the power supply to the - input terminal of the meter with a length of 22 AWG or heavier wire. Connect the - excitation (black) lead of the transducer to the - input terminal of the meter. Connect the + input terminal of the meter to the signal lead (white) of the transducer. Connect the + terminal of the power supply to the + lead (red) of the transducer. Connect the drain wire to a good earth ground. (See **Appendix A**, **page 14**.)

9. **The Model 750** comes standard with a field removable diaphragm protector (one-inch or 25 mm standoff). The diaphragm protector can easily be taken off by removing six (6) fasteners located on the bottom of the unit.

10. **Sealed-Gage Transducer Configured For Altitude Above Sea Level** Since sealed-gauge transducers are normally calibrated at sea level, there may be considerable error induced when used at a higher elevation. If the transducer was

calibrated without taking into consideration the difference in atmospheric pressure at sea level and the higher elevation, an offset error will occur. In order to eliminate error due to this difference, the customer must identify the elevation where the transducer will be installed. The nominal atmospheric pressure at the location is calculated and the transducer will be ranged accordingly. Not all KPSI Transducers are available in a sealed pressure format. Please refer to the appropriate datasheet for availability.

11. **Position Sensitivity** The transducer should be installed so that the diaphragm located behind the nose cap is oriented in a vertical position, otherwise the unit could exhibit an offset.

General Maintenance Tips for Submersible Transducers

1. Desiccant Maintenance

WARNING: POTENTIAL ELECTROSTATIC CHARGING HAZARD

In hazardous locations:

- **Avoid building up static charge on case of data protector and plastic accessories.**
- **Use damp rag to wipe data protector and plastic accessories to avoid static build up.**

If you use a desiccant vent filter, you should establish a regular maintenance schedule. You should change your vent filter when it is 75% spent (pink color). Replacement filters are available at a nominal cost from the factory. Do not remove the old vent filter until a new one is available. Remember that Pressure Systems' improved 810 SuperDry™ Vent Filter are designed to be effective for at least one year before requiring replacement.

2. Clogged Nose Piece or Dirty Diaphragm

Either of these conditions could result in erroneous readings from your transducer.

WARNING: NEVER attempt to clean your transducer's nose piece or diaphragm with any object. This will dent the sensor diaphragm and cause permanent damage to the transducer.

Your transducer may be cleaned in accordance with the procedures listed in step 4, below.

3. **Cleaning your transducer**

Materials required:

- Plastic bowls 8-12 inches (200-300 mm) in diameter and
  4-6 inches (100 - 150 mm) deep
- Supply of clean, lint-free cleaning rags
- 32 ounce bottle of “The Works-Tub and Shower Cleaner” (a mild detergent) manufactured by Lime-O-Sol Company in Ashley, IN 46705 and available locally through Wal-Mart, K-Mart, Target, and Ace Hardware stores at $2 to $4 per bottle

Preparation: Prior to cleaning your pressure transducer, ensure that all procedures have been followed in the proper cleaning of the cable and transducer to remove any hazardous materials. The vent filter (or bellows) must be properly attached. The cable should be coiled to ensure ease of handling and it must be protected against the possibility of accidental abrasion and/or penetration of the cable jacket by sharp objects. A lead length of 1 to 1 ½ feet (0.3 - 0.45 m) of cable from the transducer should be allowed to facilitate handling during cleaning. The protective covering (or similar protective device) that is shipped with each transducer should be attached to the transducer at all times. It should only be removed prior to installation or cleaning.

Your work surface needs to be clean and free of clutter and large enough to accommodate all materials required in addition to the transducer

and cable. Fill one of the bowls with fresh water, one with a mild detergent mixed with water and the last with 16 ounces (0.45 kg) of “The Works”.

Cleaning:

Step 1: Holding the cable 6 inches (150 mm) from the transducer, immerse the unit in the bowl containing the mild detergent and stir for 20-30 seconds. Remove and rinse in the bowl containing the fresh water, using the same stirring motion used in the mild detergent. Rinse and wipe dry.

Step 2: Holding the body of the transducer with one hand so that you are looking at the retaining screen protecting the sensor, carefully remove the sensor nose piece by simply unscrewing it from the transducer body. *Do not touch the sensor diaphragm with your finger or any other object. Also, do not try to dry the inside portion of the transducer, as you risk damaging the pressure sensor*.

Step 3: Place the transducer in a vertical position with the sensing end facing downward in the bowl containing “The Works” solution for approximately 15-20 seconds. Rinse in the bowl containing clean water and wipe dry the external

casing only. Place the protective screen in the same solution for 15-20 seconds, rinse and wipe dry.

Step 4: Holding the transducer in a vertical position so that you can see the face of the sensor, screw the protective nose piece back into place.

4. **Cleaning the Lightning Protection Data Line Protector**

WARNING: POTENTIAL ELECTROSTATIC CHARGING HAZARD

In hazardous locations:

- **Avoid building up static charge on case of data protector and plastic accessories.**
- **Use damp rag to wipe data protector and plastic accessories to avoid static build up.**

4.0 Warranty and Product Return Procedure

Any transducer/transmitter that is less than 2 years old (see DOM) which does not meet the product's specifications and exhibits **no obvious physical damage to the housing, sensor, or cable (cuts),** will be replaced under warranty.

Units 2-3 years old: Units that fall within this age group and exhibit no obvious physical damage to the housing, sensor, or cable (cuts), may be replaced at a discounted list price.

Units greater than 3 years old: Units that fall within this age group are not replaced under warranty.

Merchandise Return Procedures

Contact the **Applications Support Group** or the **Customer Service Department** at Measurement Specialties if your transducer is not operating properly. Our staff is available for troubleshooting at **(757) 766-1500** or toll free at **1-800-328-3665** during normal working hours, Eastern time. If your transducer or accessory needs to be returned to Measurement Specialties, obtain a *Returned Merchandise Authorization* (RMA) from the Customer Service Department prior to shipment.
Be prepared to supply the following information when requesting the RMA:

- Part number
- Serial number
- Complete description of problems/symptoms
- **Bill To** and **Ship To** address

- Purchase order number (not required for warranty repairs)
- Customer contact and telephone number

The above information, including the RMA number, must be on the customer's shipping documents that accompany the equipment to be repaired. Measurement Specialties also requests that the outside of the shipping container be labeled with the RMA number to assist in tracking the repairs. All equipment should be sent to the following address:

ATTN: KPSI TRANSDUCER REPAIR DEPARTMENT (7-digit RMA number)
Measurement Specialties
1000 Lucas Way
Hampton, Virginia 23666

Prior to returning to Measurement Specialties, the transducer and cable must be cleaned per instructions provided on the cleaning certificate supplied when the transducer was delivered. The certificate can also be found on Measurement Specialties website:

www.meas-spec.com

The completed certificate must accompany the transducer when shipped to Measurement Specialties. If the transducer has been used in media other than potable water, Measurement Specialties customer service must be notified at the same time an RMA number is requested. Measurement Specialties reserves the right to reject any shipment deemed to be unsanitary or environmentally unsafe to handle. If these guidelines are not met, the package will be sent back unopened and at the customer's expense. ***Please include the***

attached vent filter or aneroid bellow with each returned vented gage submersible transducer.

Measurement Specialties will return warranty items prepaid via UPS GROUND. If the customer desires another method of return shipment, Measurement Specialties will prepay and add the shipping charges to the repair bill.

Incoming freight charges are the customer's responsibility. The customer is also responsible for shipping charges to and from Measurement Specialties for all equipment not under warranty.

Once the return is received, it typically takes 5-10 working days for the technician to make a fault determination.

A cable reconnect fee will be charged when the customer requests a different length of cable.

Restocking Policy

Measurement Specialties does allow standard products to be returned for credit in the event it is no longer required, providing the products are in new and unused condition. A restocking fee will be assessed depending on the model type and variety.

A **25% restocking fee** applies to the following models, providing they are vented-gage reference format and [pressure ranges above 3 psig (20 kPa) and below 100 psig (690 kPa)].

27	320	700	710	750
28	342	705	720	Display Meters - all models

A **50% restocking fee** applies to the following models. This also applies to all other models with sealed-gage and absolute pressure formats as well as vented-gage reference formats with [pressure ranges below 3 psig (20 kPa) and above 100 psig (690 kPa)].

30	335
300DS	730
330	735

NOTE: Expedite premiums and shipping charges are non-refundable.

Please consult the individual manuals for the Series 350, 500 and Series 555 (TruBlue) for the restocking policy.

Appendix A

Drawings and Diagrams

Wiring Diagram VDC, mA, and Temp Output 26
Cable Anchoring Schemes 27
Reference Connection Schemes 28
Submersible Cable Termination 28

Wiring Diagram VDC, mA, and Temp Output

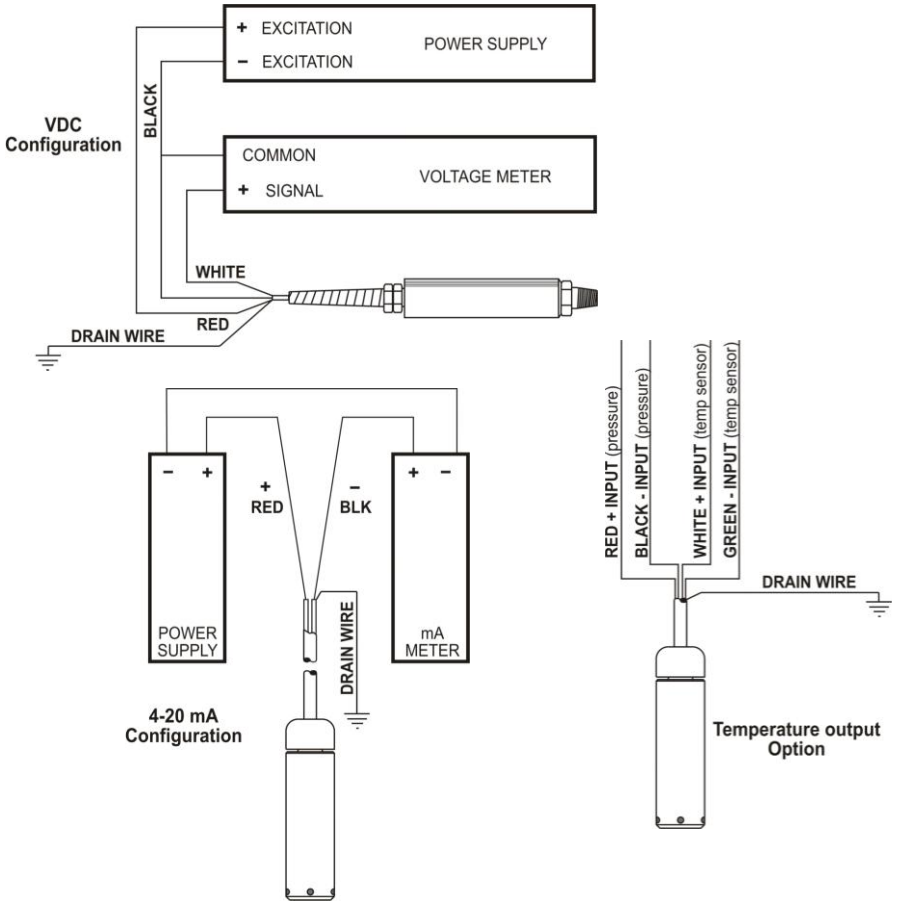

Notes:

1. These diagrams depict typical installations. Refer to your power supply and instrumentation Manufacturer for the specifics of your application.

Cable Anchoring Schemes

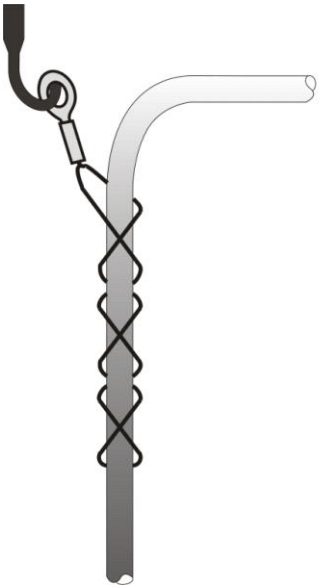

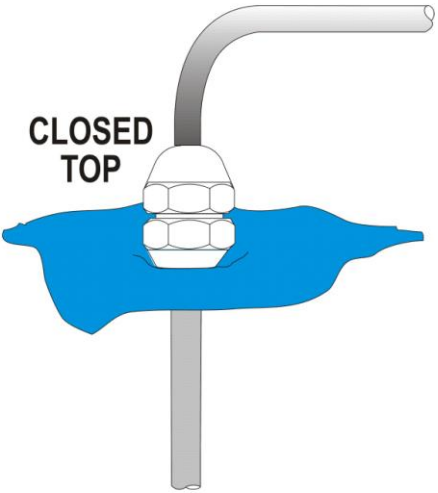

Reference Connection Schemes

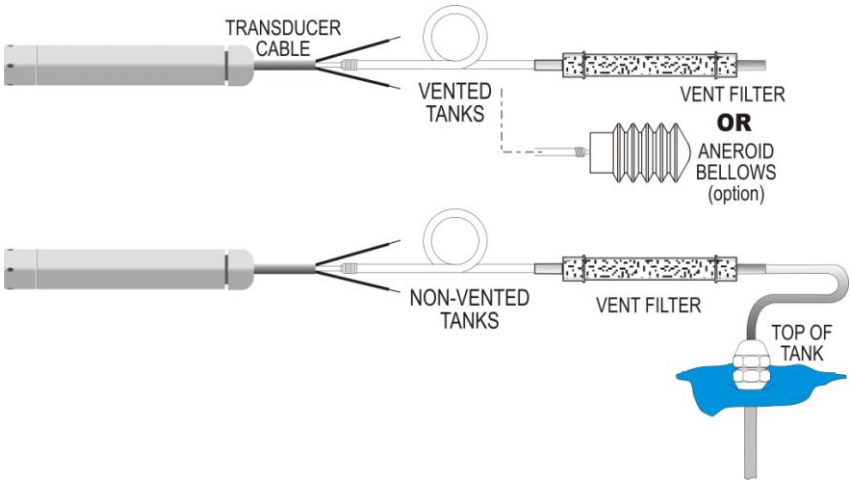

Submersible Cable Termination

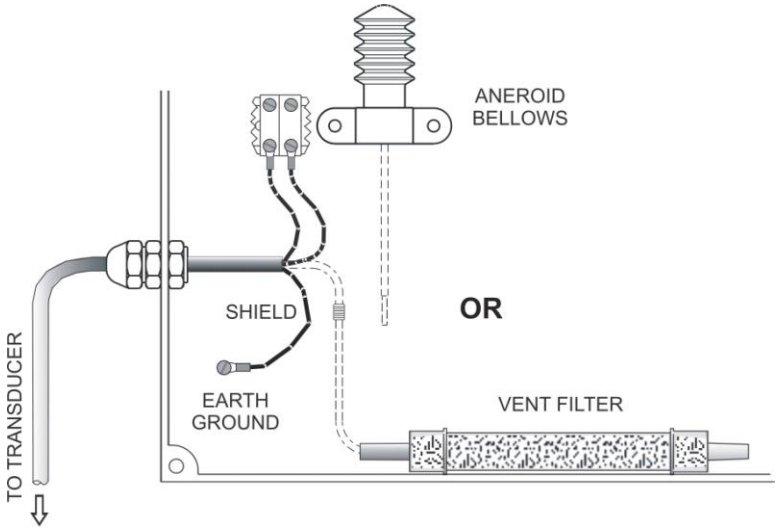

Appendix B

1. Question: What installation ideas do you have to help me get rid of electrical noise interfering with the signal?

Answer: An ounce of prevention goes a long way. Either try to eliminate the source of noise or move the transducer as far away from it as possible. We strongly encourage you to secure our cable shield to a good earth ground and that you use a 4-20 mA signal output. Armed with these precautions and the fact that many of our transducers are CE approved for electromagnetic interference, you should have few problems.

2. Question: The cable on the submersible transducer always seems to get cut and damaged. What am I doing wrong?

Answer: This is the most common problem that our users encounter. Make sure that all of your colleagues and staff understand the importance of handling the cable with care. The cable should not be bent around rough or sharp edges. Always use a cable reel during transport. Where possible, suspend the unit in a perforated 2" (50 mm) PVC pipe and thread the cable through protective conduit to the nearest junction box.

3. **Question:** I have an application where the transducer is frequently damaged by voltage spikes. What can be done to prevent this?

Answer: At a minimum, make sure the cable shield is connected to an earth ground as near as possible to the transducer. We can provide a surge protection kit for both our submersible and non-submersible transducers. See page 4. These kits will handle typical spikes that might come in through the power lines as well as surges that travel through the ground due to nearby lightning strikes

4. **Question:** How much impact shock can your submersible transducers withstand?

Answer: Our transducers are not shock tested and the lower pressure ranges can be damaged if dropped from several feet onto an unforgiving surface like concrete. We recommend that the protective shipping foam remain in place until the unit is installed.

5. **Question:** What is the response time of your transducer?

Answer: From initial power up, the transducer output will stabilize within a fraction of a second. The frequency response is rather low, probably less than 1 kHz, but it depends on the application, the media, plumbing, etc. Call our factory for application assistance if frequency response is critical in your application.

6. **Question:** How do I attach your vent filter or aneroid bellows to my cable vent tube?

Answer: The vent filter can be mounted anywhere convenient, preferably out of the weather. It can be mounted in any position and connects to the cable vent tube via the extension tube with metal connector tube provided. The aneroid bellows must be mounted in a way that its movement is not encumbered. It is provided with a mounting base.

7. **Question:** What is the best way to mark my cable?

Answer: Use white vinyl marking tape available from your local hardware or electronic stores. These same stores may also sell cable marking kits.

8. **Question:** Any ideas for preventing marine growth on your submersible transducers?

Answer: You might want to try waterproof grease. Remove the threaded nose cap to facilitate applying the grease**. Take care not to damage the diaphragm when applying the grease and not to trap air bubbles against the sensing diaphragm.**

9. **Question:** How many measurements can you make before the diaphragm on the sensor fails?

Answer: In normal operation - millions of cycles. We find that sensor failure is rarely due to diaphragm fatigue.

10. Question: What is the turnaround time on repairs?

Answer: Once we receive a unit into our facility it takes less than 10 working days to complete an evaluation.

11. Question: What is the longest length of cable you have attached to a submersible transducer?

Answer: Two thousand feet (610 meters).

12. Question: Why do you use 316 SS housings and sensors for your standard transducers?

Answer: It offers a good combination of corrosion resistance and reasonable cost. As an option, we do offer titanium for more aggressive environments.

13. Question: What wire gauge should I limit myself to when connecting to your 22 AWG wire?

Answer: Use 22 AWG or heavier.

14. Question: Does it make any difference if I mount the transducer in a vertical or horizontal position?

Answer: Yes. Our units will experience a certain amount of position sensitivity. You should mount it in a vertical position throughout the measurement cycle. If you lay the transducer down, the user must realize than an offset will occur.

15. Question: What happens when you freeze your transducer in a column of water?

Answer: We have frozen our transducers in a container of water in a home freezer, with no resulting damage. However, depending on the level range of the unit, over pressure of the unit is possible. In harsh environments where debris is common and ice shifts, you might expect damage to both the transducer and cable.

16. Question: Why would I choose a KPSI Transducer versus a competitor?

Answer: Reliable, long lasting products
Rapid delivery
Lightning protection lifetime warranty
Excellent pre & post sales/application support
No hassle service

Appendix C

Troubleshooting Techniques

Quick Check Procedure

The following is a quick field checkout procedure for KPSI Level and Pressure Transducers. It will be referred to throughout the troubleshooting section.

Should a problem be encountered with a transducer or transmitter, it is sometimes helpful to test the transducer independently from the rest of the system, thereby establishing where to concentrate the troubleshooting effort.

On the next page is a simple hookup diagram for the most common types of electrical output, a 0-5 VDC transducer and a 4-20 mA transmitter. In either case, the "power supply" can be a common 12 volt lantern battery, or even a 9 volt transistor radio battery, although the lifetime of a 9 volt battery will be limited. The meter should be a digital type capable of reading at least 2 digits to the right of the decimal point. Use 22 gage or heavier hookup wire or clip leads for jumpers. If your unit has other than a 0-5 VDC or 4-20 mA output, please call Applications Support at **(800) 328-3665** for assistance.

Once your transducer is correctly configured per one of the diagrams below, orient the transducer in a vertical position with the pressure port down and then read the zero output on your meter. For a 0-5 VDC output, the zero should be between 0 and 0.10 volts, and for a 4-20 mA output, between 3.80 and 4.20 mA. For Series 300,

the values do not change for VDC output but the values for mA are between 3.80 and 4.20 mA. If the output is outside of these limits, you may, at your option, choose to troubleshoot the transducer per the suggested measurements shown below. Otherwise, contact our Customer Service Department at **(800) 328-3665** for a Return Material Authorization number (RMA).

If the zero output is within these limits, the problem will more than likely be found elsewhere in your system.

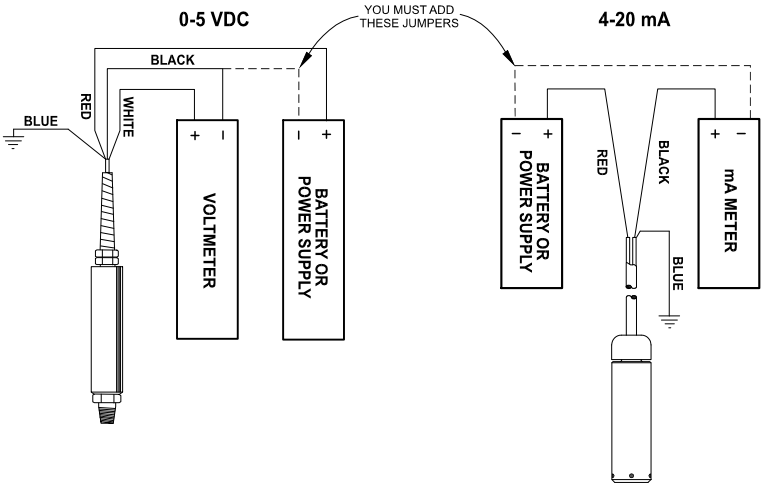

When an error is observed at a customer's installation, it is important to determine if the fault lies in the transducer or the instrument reading the transducer signal, ie. digital panel meter, programmable logic controller, etc. . To do this, a second instrument should be used to confirm the observations. The second instrument may be a handheld DMM (Digital Multi-Meter) or a dedicated milliammeter capable of reading 4-20 mA of current to a resolution of at least 0.1 mA. The diagram above illustrates the attachment of the meter in series with the black (negative signal) wire of the transducer using a 9-28 VDC power

supply for transducer excitation. Some suggested power supplies are:

- 1 - 12 VDC automotive battery.
- 2 - 6 VDC lantern batteries connected in series (for a total of 12 VDC).
- 2 - 9 VDC transistor batteries connected in series (for a total of 18 VDC).

Batteries are suggested to power the transducer during testing to eliminate the possibility that line noise is passing through an improperly filtered, grounded, or damaged power supply. All measurements should be recorded and sent to Measurement Specialties along with the transducer to assist in the evaluation process.

Further Measurements:

0-5 VDC	Should read:	4-20 mA	Should read:
+Excitation (white) to Shield (drain)	> 2.5 Mohms	+Excitation (red) to Shield (drain)	> 2.5 Mohms
-Excitation (black) to Shield (drain)	> 2.5 Mohms	-Excitation (black) to Shield (drain)	> 2.5 Mohms
+Output (red) to Shield (drain)	> 2.5 Mohms	Shield (drain) to Housing	< 2 ohms
Shield (blue) to Housing	< 2 ohms		

Maximum Cable Lengths and Minimum Supply Voltage

The maximum length of cable to be used with our submersible transducers is largely dependent upon the type of electrical output of the transducer. For a 0-5 VDC output, a maximum cable length of 100 feet (30 m) is recommended. A voltage output is more susceptible to electrical interference than a 4-20 mA signal. A 4-20 mA signal can be transmitted much longer distances, depending upon such factors as temperature, wire size, length of the wire, power supply, and voltage requirements of any devices to be powered. At 25ºC the 22 AWG conducting copper wire used in our polyurethane jacketed cable has a resistance of 16.45 ohms per 1000 feet (304 m).

Using Ohms Law (E=IR) where E=voltage, I=current and R =resistance, one finds that a 20 mA signal requires .329 volts to drive it along 1000 feet (304 m) of 22 AWG copper wire (E=16.45 x .020). This drop is seen on both the supply and return wire for a total loop voltage drop of 0.658 volts

To find out how much voltage is required to drive our Series 700 submersible level transducer's 4-20 mA signal 10,000 feet, just add the minimum power requirement of the 700 (9 VDC) to the resistance offered by 10,000 feet (3048 m) of our polyurethane jacketed cable (10,000÷1000 x .658=6.58). The resulting power requirement is 15.58 VDC (9 + 6.58).

Connect the cable shield (drain wire) to a good earth ground. This will protect the transducer from relatively minor transient voltages. The only exception to this rule

is if high rates of electrolytic corrosion have been previously experienced with grounded submersible

devices. In this case it may be better to leave the shield disconnected.

Please note: When using products with the lightning protection option on 4-20 mA products, users should take into account the additional series resistance of this option when selecting the loop power supply. This option will increase total loop resistance by 88 Ohms.

Troubleshooting Techniques

1. **Symptom**: ***Transducer fails to give output of any kind.***
   Procedure: Isolate the problem to either the transducer or the power supply/readout. See the Quick Check Procedures (above) for this check. If it can be determined that the transducer is no longer operable, remove it from service for further analysis. If the transducer output falls within the limits described above, the fault lies somewhere else in your system.

2. **Symptom**: ***Transducer has failed and has been removed for analysis.***
   Procedure: Inspect the cable for physical damage. Cuts in the cable jacket can result in liquid incursion into the transducer housing, which can cause permanent damage. If operational, the cable can be repaired by using a splice kit (P/N 830) supplied by

Measurement Specialties.

Inspect the transducer housing. It should be intact and free of corrosion. If the outer surface of the transducer is pitted, this could be an indication of galvanic corrosion caused by stray ground currents. If this is the case, the transducer will probably require replacement. If the external case exhibits none of these characteristics, carefully unscrew the nosepiece and look into the pressure sensing end of the transducer. The concentric rings of the sensing diaphragm should be visible. If they are not, it could be that residue has accumulated on the diaphragm, preventing it from responding properly to pressure changes. The transducer can be cleaned by gently swishing the transducer back and forth in a bucket of warm, soapy water until the residue softens and washes off. (See **Cleaning Your Transducer**, page 8.) ***Under no circumstances should any object or tool be used to remove residue from the sensing diaphragm or else permanent damage will be done.*** If cleaning the diaphragm does not solve the problem, the transducer should be returned to the factory for repair or replacement.

3. Symptom: ***Transducer develops a negative offset and gets worse over time (actual level exceeds specified level).***

Procedure: This may be a sign that moisture has entered the reference (vent) tube in the cable and is inside the transducer housing. This is usually the result of not maintaining the desiccant vent filter or of operating the transducer without a desiccant filter or aneroid bellows. If caught early enough, the transducer can be saved by coiling the cable and transducer in a pan and baking it in an oven at 50°C (122°F) for a minimum of 2 hours. *Be careful that the oven temperature does not exceed 50ºC (122°F)* or both the transducer and the cable can be damaged. **Alternatively**, suspend both the cable and transducer in a vertical position (with vent tube down), overnight to allow water to drain from the transducer and vent tube.

4. Symptom: ***Transducer suddenly fails during or just after a nearby lightning event.***

Procedure: This failure is usually caused by overvoltage due to ground transients resulting from a direct or indirect lightning event. These transients can travel distances of a mile or more.

The transducer may be returned to the factory for repair and optional retrofit of our ***lightning protection system.*** This system carries a lifetime warranty against transducer damage due to lightning.

5. **Symptom**: ***Transducer response to pressure/level input changes becomes sluggish.***

Procedure: This is usually a sign that the sensing end of the transducer has become fouled with residue. The transducer must be removed from service and the sensing diaphragm cleaned as described in Item 2, (warm, soapy water). If fouling persists, the transducer may be replaced with a Series 705 or Series 750 (non-fouling) transducer, which is specifically designed for trouble-free operation in a high residue environment.

6. **Symptom**: ***Output reading is within limits but "freezes" at one point.***

Procedure: In certain environments "crust" may form over the sensing diaphragm, preventing the sensor from identifying change in level. Removing the transducer from service and cleaning it (as described in Item 2) will generally solve the problem. To combat marine growth, you might try wrapping the transducer with copper wire similar to that found in wire scouring pads for cleaning dishes.

Marine growth occurs on the copper and eventually erodes the copper and drops off or the copper is manually removed during routine maintenance. Alternatively, there are various companies that will impregnate/coat the 316 stainless steel with anti-fouling chemicals of coatings. Level transducers temporarily removed from the well or sump should not be stored dry, but should be stored in a bucket of fresh water in order to prevent "crust" formation.

7. **Symptom**: ***Readings increase very slowly over time***.

Procedure: Our cable is shipped coiled and consequently takes time to straighten when installed. Attaching a weight to the transducer (e.g., one of our sacrificial anodes) will help. To prevent cable stretch with lengths greater than 200 feet (60 m), secure the Kevlar fibers (just under the cable jacket) to your junction box or other secure object.

8. **Symptom**: ***No electrical output from your transducer.***

Procedure: Check all electrical connections to ensure they are correct and secure. Double check your power supply or use a battery (as described previously) to ensure the transducer is getting power. If all checks OK, the problem could be a circuit board or the sensor in your transducer. The

unit must be returned to the factory for evaluation. The most probable cause of this type of failure is damage

to the submersible cable jacket allowing water to leak down the cable and into the transducer housing or lightning damage.

9. Symptom: ***Formation of marine growth on a submersible transducer.***

Procedure: Certain transducer construction materials, for example, 316 stainless steel, attract marine life (snails) and algae. Clean the transducer diaphragm by soaking it in a bucket of warm water with a non-aggressive cleaning solution. You can also coat the transducer with marine grease. This may be the most effective and inexpensive way to protect your transducer.

10. Symptom: ***Submersible transducer exhibits corrosion or pitting on body or diaphragm***

Procedure: Dissimilar metals (for example, your transducer housing and your pump housing) in an electrolytic environment (fluid in your well) can lead to *galvanic corrosion* of the metal that is nearer the anodic end of the galvanic series. Likewise, a voltage potential between the ground wire of the transducer and the ground of other equipment in the well can lead

to *galvanic corrosion*. Installation of a P/N 820 or 825 sacrificial anode will help protect your transducer from *galvanic corrosion*. Our sacrificial

anodes are made of a zinc alloy that, being nearer the anodic end of the galvanic series than the 316 stainless steel or titanium housing of the transducer, will corrode before the transducer.

11. Symptom: ***The transducer is buried in dirt or silt and the readings seem to be erroneous.***

Procedure: Use of a piezometer nosepiece in this application would help. This nosepiece can be easily installed in the field and features a very fine screen to keep dirt from fouling the diaphragm, but allows the diaphragm to sense moisture levels.

12. Symptom: ***Transducer has an offset error.***

Procedure: Our submersible transducers perform best when the sensing end is pointing in a downward manner. Keep in mind that you can experience offset error due to the position sensitivity or orientation change of the sensor. Offset errors are more prominent in low pressure applications with the sensing end of the transducer lying flat or pointing upward.

13. Symptom: ***I am testing a Series 700 4-20mA sensor for use with our data logger. On page A-2 of the KPSI Level and Pressure Transducers User's Manual, I see the standard 4-20mA configuration. Does the recording channel of my data logger become the mA meter?***

Procedure: Most data loggers cannot measure current (mA) directly. When this is the case a load resistor must be used to convert the current (mA) output into an appropriate voltage. If the User's Manual for your particular instrument does not illustrate a preferred method for recording current (mA) data then you should attach your transducer signal wires to your data logger in the following manner.

Transducer red wire - Data Logger Excitation Terminal
(The minimum excitation for a Series 700 Transducer is 9VDC)
Transducer black wire – Data Logger signal input (+) terminal

Attach a Load resistor between the Data Logger signal input (+) terminal and the Data Logger signal input (-) terminal.

Attach a separate piece of wire between the Data Logger signal input (-) and analog ground.

In this configuration you will turn your data logger into a milliammeter. The size of your load resistor can be calculated in the following manner.

D/0.02=R

Where:

Data logger input range = D
Full scale output of transducer = 0.02 A (20 mA)
Load Resistor Value = R

Pick an appropriate standard value

250 Ohms results in 1 to 5 VDC at 4 and 20 mADC
125 Ohms results in 0.5 to 2.5 VDC (500 to 2500 mVDC) at 4 and 20 mADC

At this point the discussion needs to address IR loss (voltage drop) in series circuits. Note that Series 700 transducers need a minimum of 9 VDC to operate correctly. When the transducer is operating correctly it will output a current which, when driven through a resistor, will generate some amount of voltage drop. If the resistor value is 250 Ohms then the voltage

measured across that resistor will be 0.004 A * 250 Ohms = 1.000 VDC and 0.020 A * 250 Ohms = 5 VDC. Notice that, if the available voltage from the data logger is12 VDC then 12 VDC - 5 VDC = 7 VDC which is less than the voltage required by the transducer to operate. If this scenario were to occur the transducer would actually stop functioning correctly when its output reached 12 mADC (50% of transducer full scale range). In this case the appropriate choice for a load resistor value is 125 Ohms.

14. Symptom: ***I have a Series 700 4-20mA transducer rated for 7.5 PSIG attached to a pressure source that is outputting 7.5 PSIG. With 20VDC being supplied I am getting 19.94 mA. I can't find the upper range allowance for the sensor, but this seems low to me. Does this mA reading fall into the acceptable range for the transducer with the settings I've specified?***

Procedure: When evaluating a transducer it is sometimes convenient to make some broad generalizations in order to rapidly determine the condition of the unit. In general, transducers that output a 4-20 mADC signal have a 16 mADC span (4 - 20 = 16). If the

transducers accuracy is reported as being some percentage of its full-scale range then the following table could be used in conjunction with the instructional notations to determine whether a more detailed analysis of

data quality is required.

Model	Accuracy (Accuracy in mADC)
700	1.00%FS ±0.16 ma
710	0.50%FS ±0.08 ma
720	0.25%FS ±0.05 ma
730	0.10%FS ±0.016 ma
735	0.05%FS ±0.008 ma

In order to approximately determine how many milliamps a transducer should output at a given depth.
1. Determine the depth (in feet) at which the transducer is sited.
2. Divide the depth value (from step 1) by the transducer full-scale range (in feet). - Record the value.
3. Multiply the value calculated in step 2 by 16 (the transducer span in milliamps).
4. Add 4 to the product of step 3. This is the approximate value in milliamps that should be output by the

transducer at its current depth.

In order to approximately determine the depth of a transducer (in feet) using a given value of milliamps.
1. Divide the full-scale range of the transducer (in feet) by 16. Record this value.
2. Subtract 4 from the milliamp output of the transducer. Record this value
3. Multiply the result of step one by the result of step 2. This is the approximate depth at which the transducer is sited.

If the resulting numbers are reasonably close to some verified value for current water depth, then the unit is functioning. In order to determine the quality of measurement, additional steps need to be performed.

Appendix D

Calibration Calculations

Measurement Specialties ships a calibration sheet with every KPSI™ Transducer. This sheet lists the actual values that were output by the transducer, when it was being manufactured, at several different pressures. In addition, two coefficients are provided that can be used to calculate the actual depth from any given mA output value. These coefficients are derived from a Least Squares Best Fit Straight Line (BFSL) calibration using the data listed on the datasheet. Our accuracy specification is referenced to the line described by the BFSL coefficients and so the transducer may not output exactly 4 mADC at zero pressure and 20 mADC at full-scale. As an example here is an example of data for a typical transducer.

Calibration Report

Test Date: 02/28/08
Test Time: 13:02:57
Model No: 320T14B0A008.670000.000B10030B
Serial No: 0802048
Pressure Range: 0.00 to 8.67 PSIG
Excitation: 9-28 VDC
Output: 4-20 mA

Test Temps: ROOM = 25.3 DegC

PCU Serial No: TRF048

Target Test Pressure	BFSL Rm Temp Outputs	Run #1 Rm Temp Outputs	Run #1 Error %FSO	Run #2 Rm Temp Outputs	Run #2 Error %FSO
0.00	4.0017	3.9995	-0.0134	3.9981	-0.0222
1.73	7.2050	7.2003	-0.0295	7.2066	0.0098
3.47	10.4096	10.4111	0.0091	10.4144	0.0297
5.20	13.6133	13.6182	0.0305	13.6207	0.0461
6.94	16.8176	16.8158	-0.0114	16.8174	-0.0014
8.67	20.0219	20.0173	-0.0290	20.0190	-0.0184
6.94	16.8171	16.8162	-0.0057	16.8172	0.0006
5.20	13.6127	13.6176	0.0305	13.6175	0.0299
3.47	10.4083	10.4131	0.0298	10.4110	0.0167
1.73	7.2049	7.2067	0.0115	7.2059	0.0065
0.00	4.0020	4.0001	-0.0118	4.0000	-0.0124

Maximum Static Error: 0.0523 %FSO
Maximum Non-repeatability: -0.0393 %FSO

Electrical termination:
RED: +SUPPLY
BLACK: -SUPPLY
BLUE: SHIELD

Slope1:	0.5411	PSIG/mA
Zero Offset1:	0.0000	PSIG
Slope2:	1.8479	mA/PSIG
Zero Offset2:	4.0017	mA
Conversion Factor:	1.0000	

Notes:

Calculations:

Method 1: Calculate pressure in desired units, using sensor's output as independent variable.
PSIG = 0.5411(mA - 4.0017) + 0.0000

Method 2: Calculate predicted sensor output in desired units using pressure as the independent variable.
mA = 1.8479(PSIG - 0.0000) + 4.0017

In this case, even though the offset or 0 PSIG output was 4.0017 mADC and the full-scale point was 20.0219 mADC the unit actually performed better than its specified accuracy of ±0.25% of full-scale range as indicated in the Error % FS column.

The calculation for pressure is illustrated below:

PSIG = (Span*Output (in mA)) + Offset

And, to convert to feet of water

Feet H_2O = PSIG * 2.3073

measurement
SPECIALTIES

1000 Lucas Way, Hampton, VA 23666 USA
Phone 757-766-1500, Fax 800-745-8008
E-mail pvg.cs.amer@meas-spec.com
www.meas-spec.com
online orders www.LevelandPressure.com

WELL RW-100 VAULT HATCH INTRUSION LIMIT SWITCH

Specification Section 13410
Drawing EI 684

Eaton/Cutler-Hammer
Model E50AR1
with E50KL443 Roller Arm Lever

23 Old Dock Road • Yaphank, NY 11980 • Tel: (631) 924-1315 • Fax: (631) 924-1012

E50 Heavy-Duty Plug-In Switches

2



Contents

Description	Page
E50 Heavy-Duty Plug-In Switches	
Product Selection	
Assembled Switches—Standard	V8-T2-55
Assembled Switches—Special Purpose	V8-T2-58
Operating Heads	V8-T2-59
Switch Bodies	V8-T2-60
Receptacles	V8-T2-61
Compatible Connector Cables	V8-T2-62
Accessories	V8-T2-62
Technical Data and Specifications	V8-T2-64
Circuit Diagrams	V8-T2-65
Wiring Diagrams	V8-T2-65
Dimensions	V8-T2-66

Drawings Online

E50 Heavy-Duty Plug-In Switches

Product Description

E50 Modular Plug-In Limit Switch Components from Eaton's electrical sector are the industry standard with versatility of design and high reliability for low maintenance, installation and inventory costs. Standard Viton gaskets, seals and boots and a zinc die cast enclosure provide exceptional chemical resistance to the common coolants, cleansing agents, and hydraulic fluids found in machine tool, automotive, waste water treatment and other heavy-duty industrial applications. Mounting dimensions accommodate both U.S. and DIN standards for easy retrofit installations. Super bright 24–120 Vac/dc LED indicating light versions simplify setup and troubleshooting operations.

Features

- Modular, plug-in components (head, body and receptacle) provide application flexibility, reduced inventory and less downtime
- Manufactured to take the physical and environmental abuse (including cutting fluids and chemicals) of harsh industrial environments
- Chemical resistant Viton gaskets, seals and boots are standard, and so are captive, posi-drive screws
- The switches have terminal identification on the nameplate for a visual wiring checkout without guesswork. Heads and switch bodies can be replaced without rewiring
- E50 devices can be ordered in separate components or as complete assembled switches
- 600V rating, ridge-topped contacts and wiping action assure continuity even to logic level circuits
- Keyed, four direction head positioning
- Standard 5° pre-travel and 90° total travel
- 24–120 Vac/dc LED and 120 Vac neon indicating lights available
- Rotary heads are field convertible CW, CCW, or both, without special tools
- Epoxy filled, pin connector or pigtail pin connector receptacles available

Standards and Certifications

- UL Listed
- CSA Certified
- IEC.947.5.1
- TUV—E9271605E02
- CE (where shown)

⚠ DANGER

THIS SENSOR IS NOT A SAFETY DEVICE AND IS NOT INTENDED TO BE USED AS A SAFETY DEVICE. This sensor is designed only to detect and read certain data in an electronic manner and perform no use apart from that, specifically no safety-related use. This sensor product does not include self-checking redundant circuitry, and the failure of this sensor product could cause either an energized or de-energized output condition, which could result in death, serious bodily injury, or property damage.

For the most current information on this product, visit our Web site: www.eaton.com

For Customer Service in the U.S. call 1-877-ETN CARE (386-2273), in Canada call 1-800-268-3578.
For Application Assistance in the U.S. and Canada call 1-800-426-9184.

Product Selection

Assembled Switches—Standard

Assembled Switch



E50 Heavy-Duty Plug-In Switches, Assembled—Standard

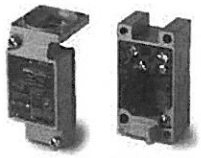

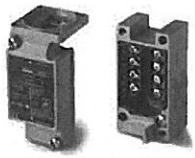

	Single-Pole (5 Terminal Receptacle)			Two-Pole (9 Terminal Receptacle)				
Indicating Light:	**None**	**LED (24–120 Vac/dc)**	**Neon (120 Vac)**	**None**	**LED (24–120 Vac/dc)**	**Neon (120 Vac)**	**LED (24–120 Vac/dc)**	**Neon (120 Vac)**
	E50SA	**E50SAL**	**E50SAN**	**E50SB**	**E50SBL**	**E50SBN**	**E50SCL**	
Switch Body:	**1NO-1NC**	**1NO-1NC**	**1NO-1NC**	**2NO-2NC**	**2NO-2NC**	**2NO-2NC**	**1NO-2NC**	—
Receptacle: ①	**E50RA**	**E50RA**	**E50RA**	**E50RB**	**E50RB**	**E50RB**	**E50RB**	**E50RB**
Operating Head Type ② **Description**	**Assembled Switch (Head + Receptacle + Body) Catalog Number**			**Assembled Switch (Head + Receptacle + Body) Catalog Number**				
Side Rotary (requires an operating lever, see **Page V8-T2-80**)								
Standard spring return—E50DR1 ③	**E50AR1** CE	**E50ALR1**	**E50ANR1**	**E50BR1**	**E50BLR1**	**E50BNR1**	—	—
Low force spring return—E50DL1 ③	**E50AL1** CE	**E50ALL1**	**E50ANL1**	**E50BL1**	**E50BLL1**	**E50BNL1**	—	—
Maintained two-position—E50DM1	**E50AM1** CE	**E50ALM1**	**E50ANM1**	**E50BM1**	**E50BLM1**	**E50BNM1**	—	—
Side Pushbutton								
Spring return—E50DS1	**E50AS1** CE	**E50ALS1**	**E50ANS1**	**E50BS1**	**E50BLS1**	**E50BNS1**	**E50CLS1**	—
Adjustable spring return—E50DS2	**E50AS2** CE	**E50ALS2**	**E50ANS2**	**E50BS2**	**E50BLS2**	**E50BNS2**	**E50BLS2**	**E50CNS2**

Spring Return



Adjustable Spring Return



Circuit Diagrams, see **Page V8-T2-65**.

Notes

① Connection options (add the code suffix from the table below to the end of the catalog number):

Option		Mating Cordset Catalog Number	Code Suffix
Mini-connector ④ (with epoxy filled receptacle)	Single-pole (5-pin mini-connector)	**CSMS5D5CY1602**	**P5** ⑥
	Two-pole (9-pin mini-connector)	**CSMS9D9CY1602**	**P9** ⑥
Micro-connector ④ (with epoxy filled receptacle)	Single-pole (5-pin micro-connector)	**CSDS5A5CY2202**	**A5** ⑥
Cable connection (with epoxy filled receptacle)	8 ft cable length	—	**S**
	12 ft cable length	—	**S12**
	20 ft cable length	—	**S20**
Manifold mount (rear wiring entrance)		—	**M**
20 mm conduit entrance		—	**20**

② For operating head specifications, see **Page V8-T2-59**.
③ CW (clockwise) and CCW (counterclockwise) operation, easily convertible to CW only or CCW only operation.
④ For a full selection of cable connectors, see **Tab 10, section 10.1**.
⑥ Refer to **Page V8-T2-65** for wiring diagrams.

Note: Only operators with Nylatron rods or rollers should be used with explosion-proof limit switches.

2

Operators—Roller Type, continued

E50KL532



Roller Type	Minimum Required Return Torque ①	Approximate Dimensions in Inches (mm) A Lever Length ②	B Roller Diameter	C Roller Width	D	E	F	Catalog Number
Bantam Lever								
Metal	0.45 in-oz	0.69 (17.5)	0.85 (22.0)	0.18 (4.6)	—	—	—	**E50KL532**
Precision Adjustment								
Nylatron	0.65 in-oz	0.69 (17.5) Roller length: 1.50 (38.1) ③	0.75 (19.0)	0.32 (8.1)	0.48 (12.2)	0.24 (6.1)	0.28 (7.1)	**E50KL340**
Metal	1.20 in-oz		0.75 (19.0)	0.32 (8.1)	0.48 (12.2)	0.24 (6.1)	0.28 (7.1)	**E50KL465**
Ball bearing	0.90 in-oz		0.69 (17.5)	0.25 (6.4)	0.48 (12.2)	0.16 (4.1)	0.22 (5.6)	**E50KL535**
Dimensions, see **Page V8-T2-85.**								
Adjustable Roller (Stainless Steel)								
Ball bearing	2.50 in-oz ④	1.0 (25.4) to 3.75 (95.2) ⑤	0.69 (17.5)	0.25 (6.4)	0.23 (5.8)	0.30 (7.6)	—	**E50KL539**
Nylatron	1.90 in-oz ④		0.75 (19.0)	0.32 (8.1)	0.29 (7.4)	0.33 (8.4)	—	**E50KL201**
			0.75 (19.0)	0.32 (8.1)	0.29 (7.4)	0.33 (8.4)	—	**E50KL201SPL** ⑥
Metal	3.40 in-oz ④		0.75 (19.0)	0.32 (8.1)	0.29 (7.4)	0.33 (8.4)	—	**E50KL538**
Nylatron	1.90 in-oz ④		0.75 (19.0)	0.50 (12.7)	0.46 (11.6)	0.48 (12.2)	—	**E50KL599**
Nylatron	3.10 in-oz ④		0.75 (19.0)	1.00 (25.4)	0.90 (22.9)	0.95 (24.1)	—	**E50KL537**
Large Nylatron	4.50 in-oz ④	0.5 (12.7) to 3.25 (82.6)	4.00 (102.0)	0.11 (2.8)	0.11 (2.8)	0.19 (4.8)	—	**E50KL598**
Without roller	1.20 in-oz ④	0.5 (12.7) to 3.75 (95.2)	—	—	—	—	—	**E50KL31**
Nylatron	2.50 in-oz ④	1.63 (41.3) to 3.75 (95.2) ⑤	1.50 (38.1)	0.29 (7.4)	0.26 (6.6)	0.32 (8.1)	—	**E50KL443**
Dimensions, see **Page V8-T2-86.**								

E50KL340



E50KL201



E50KL537



Operators—Roller Type, continued

E50KL545



E50KL542



Roller Type	Minimum Required Return Torque ①	Approximate Dimensions in Inches (mm) A Lever Length ②	B Roller Diameter	C Roller Width	D	E	F	G	Catalog Number
Fork Lever—Both Rollers on One Side									
Ball bearing	—	1.50 (38.1)	0.69 (17.5)	0.25 (6.4)	0.08 (2.0)	0.14 (3.6)	—	—	**E50KL545**
Nylatron	—		0.75 (19.0)	0.32 (8.1)	0.16 (4.1)	0,20 (5.1)	—	—	**E50KL204**
Metal	—		0.75 (19.0)	0.32 (8.1)	0.16 (4.1)	0,20 (5.1)	—	—	**E50KL544**
Nylatron	—		0.75 (19.0)	1.00 (25.4)	0.84 (21.3)	0.88 (22.4)	—	—	**E50KL543**
Fork Lever—One Roller Outside, One Inside									
Ball bearing	—	1.50 (38.1)	0.69 (17.5)	0.25 (6.4)	0.08 (2.0)	0.14 (3.6)	0.64 (16.3)	0.70 (17.8)	**E50KL542**
Nylatron	—		0.75 (19.0)	0.32 (8.1)	0.16 (4.1)	0.20 (5.1)	0.73 (18,5)	0.77 (19.6)	**E50KL203**
Metal	—		0.75 (19.0)	0.32 (8.1)	0.16 (4.1)	0.20 (5.1)	0.73 (18,5)	0.77 (19.6)	**E50KL541**
Dimensions, see **Page V8-T2-86.**									

Notes

① **Caution:** When selecting lever, the minimum required return torque of lever should not exceed minimum return force available in operating head as given in operating head specifications.
② Length from the operating shaft axis to the roller axis (or to the tip for non-roller operators).
③ Maximum length dimension between operating shaft axis to roller axis for comparison. Precision adjustable to lesser dimensions.
④ Applies when lever is extended to the maximum dimension.
⑤ By reassembling lever, minimum length can be reduced another 0.5 in (12.7 mm).
⑥ High-grade stainless steel.

Installation Instructions — E50/E51 Receptacles with Pin-Connectors

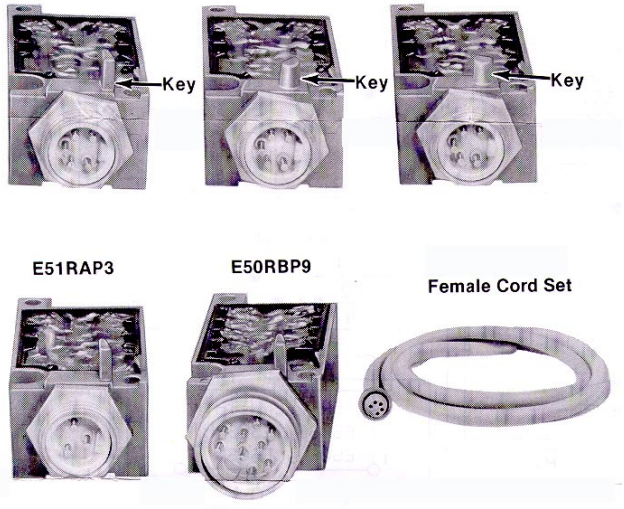

DESCRIPTION

Each device consists of a die-cast enclosure with either 3, 5, or 9 wiring terminals wired to a mini-change pin connector. The entire die-cast enclosure is completely epoxy-potted. An Eaton Cutler-Hammer business unit trademark is attached to and is visible on the epoxy. This logo identifies the device as having been manufactured by Cutler-Hammer and assures you are receiving a quality Cutler-Hammer product.

FUNCTION

To serve as a wiring base for E51 proximity and photoelectric sensors and also E50 limit switches. The switch body and receptacle are both keyed to assure proper assembly. The following is a list of E50/E51 receptacle with pin-connectors and the switch bodies that mate them.

NOTE: The 50RAP5, E51RCP5, E51RNP2 all have 5-pin connectors. The difference among them is the wiring sequence of the connector pins to receptacle terminals and the keys. The keys are pictured above.

C-H RECEPTACLE	C-H SWITCH BODY	C-H CONNECTOR	LENGTH	WIRE #	COLOR
E50RAP5	E50SA E50SAN E50SG	E57KYED127-6	6 feet	1 2 3 4 5	White Red Green Orange Black
E50RB9	E50SB E50SBN E50SN E50ST	CSAS9D9CY1602	6 feet	1 2 3 4 5 6 7 8 9	Orange Blue Red - Black Tracer Green - Balck Tracer White Red Green White - Black Tracer Black
E51RAP3	E50SA[1] E50SAN[1] E50SG[1] E51SAL E51SBL[1] E51SAL24 E51SXL24 E51SDL	E57KYED110-3 E57KYED110-6 E57KYED110-12	3 feet 6 feet 12 feet	1 2 3	Green Black White
E51RCP5	E51SCL	E57KYED127-6	6 feet	1 2 3 4 5	White Red Green Orange Black
E51RNP5	E51SPL				

[1]Using only the 1 N.O. contact.

E50/E51 RECEPTACLES WITH PIN-CONNECTORS (CONTINUED)

WIRING DIAGRAMS

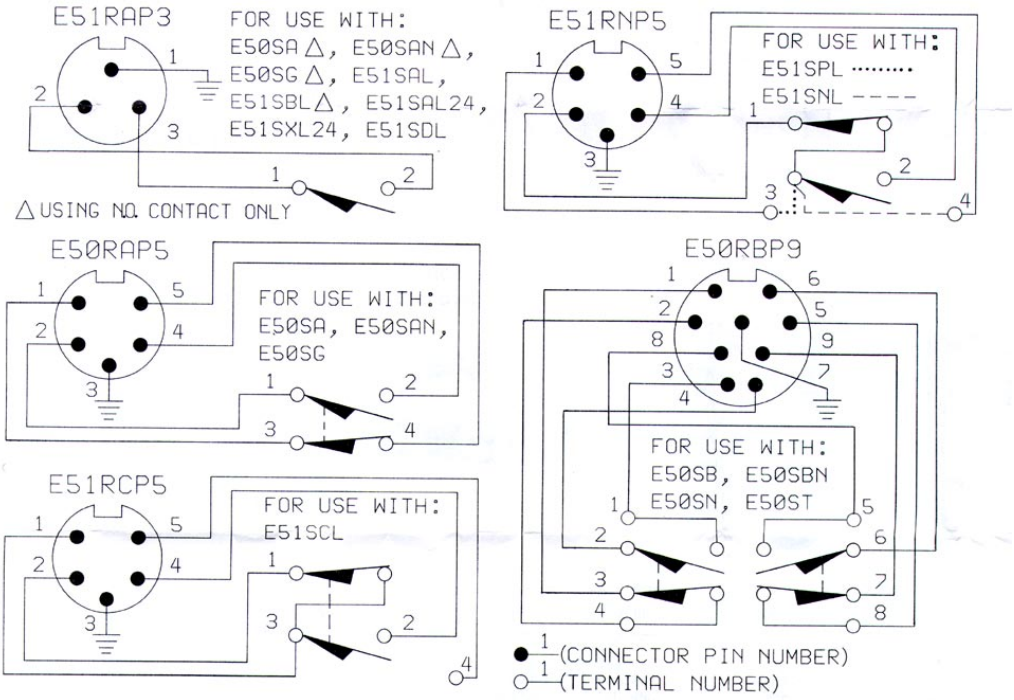

CAUTION

The Cutler-Hammer receptacle are wired per the above diagrams. Similar diagrams appear on the side of the receptacle. These diagrams list receptacle terminal number and connector pin number and require the person applying the switch to match the information on the receptacle to information on the front switch boy nameplate. Care should be taken when wiring the Brad Harrison cord set so that the wiring is in the same sequences as the male portion of the connector.

For further technical information see:

- For E50 see: TIP E50
  Pub. 15836 (supplied with most E50 components)
- For E51 see: TIP E51 Proximity
  TIP E51 Photo
  Pub 16973 (supplied with most E51 components)

For information on factory-sealed devices see the following:

- For E50 Factory-sealed Devices see: TIP E50 (6P)
  Pub. 17254 (supplied with Factory-sealed Devices)
- For E51 Factory-sealed see: TIP E51 (6P)
  Pub. 16973 (supplied with Factory-sealed Devices)

MOUNTING AND DRILLING DIMENSIONS

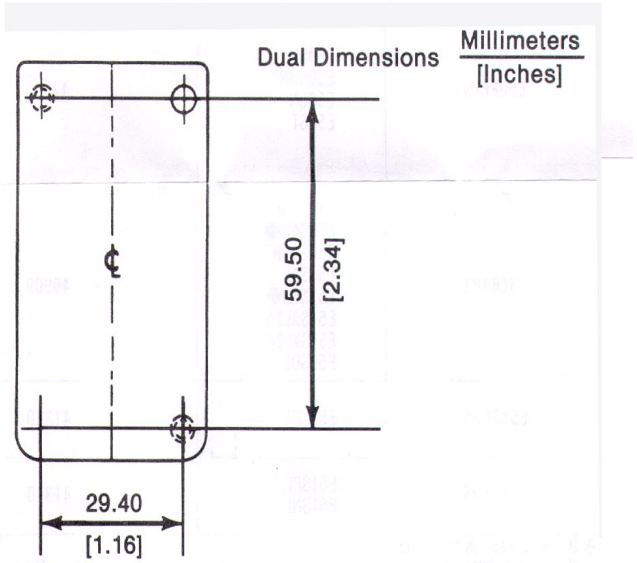

ADJUSTMENT OF LEVER POSITION

To loosen lever and adjust lever position:

1. Loosen screw by turning counterclockwise 2-3 turns.
2. Push screw toward lever.
3. Adjust lever to desired position.
4. Hold lever in position and tighten screw to 22-25 in-lb.

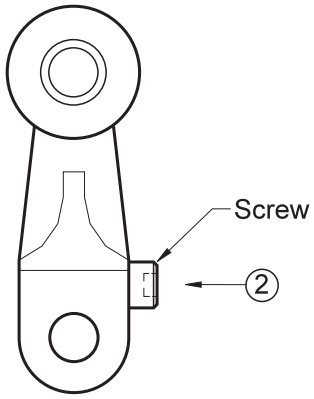

Cutler-Hammer
720 80th Street SW
Everett, WA 98203-6299
425/513-5300 425/513-5302
www.cutlerhammer.com

Effective 4/03/97
Printed in U.S.A.

Cutler-Hammer 110918 Rev —

ADJUSTMENT OF LEVER POSITION

To loosen lever and adjust lever position:

1. Loosen screw by turning counterclockwise 2-3 turns.
2. Push screw toward lever.
3. Adjust lever to desired position.
4. Hold lever in position and tighten screw to 22-25 in-lb.

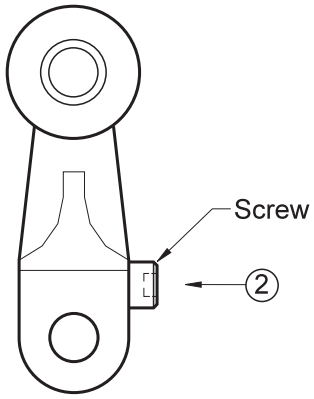

Cutler-Hammer
720 80th Street SW
Everett, WA 98203-6299
425/513-5300 425/513-5302
www.cutlerhammer.com

Effective 4/03/97
Printed in U.S.A.

Cutler-Hammer 110918 Rev —

ADJUSTMENT OF LEVER POSITION

To loosen lever and adjust lever position:

1. Loosen screw by turning counterclockwise 2-3 turns.
2. Push screw toward lever.
3. Adjust lever to desired position.
4. Hold lever in position and tighten screw to 22-25 in-lb.

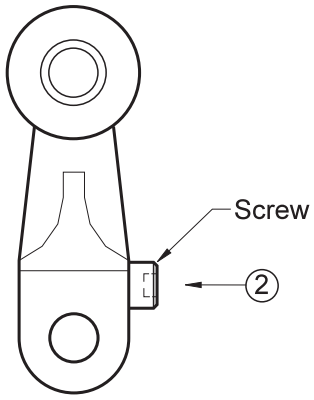

Cutler-Hammer
720 80th Street SW
Everett, WA 98203-6299
425/513-5300 425/513-5302
www.cutlerhammer.com

Effective 4/03/97
Printed in U.S.A.

Cutler-Hammer 110918 Rev —

ADJUSTMENT OF LEVER POSITION

To loosen lever and adjust lever position:

1. Loosen screw by turning counterclockwise 2-3 turns.
2. Push screw toward lever.
3. Adjust lever to desired position.
4. Hold lever in position and tighten screw to 22-25 in-lb.

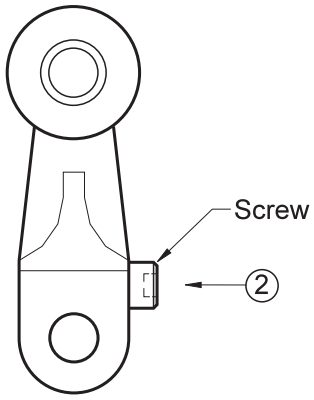

Cutler-Hammer
720 80th Street SW
Everett, WA 98203-6299
425/513-5300 425/513-5302
www.cutlerhammer.com

Effective 4/03/97
Printed in U.S.A.

GREATROCK Automation

97 Rome Street
Farmingdale, NY 11735
Phone: (631) 270-1508

OPERATION & MAINTENANCE MANUAL

Lockheed Martin Corp.
OU-1 & 2 Extraction/Recovery Well Electrical Upgrades

16470-001
Active Harmonic Filters OU-1

Project: 3617197453
Engineer: AMEC
Contractor: Hinck Electrical Contractor
Job: 8994

REV	DESCRIPTION	PREPARED BY	DATE
1	INITIAL RELEASE	JM	05/19/2021
2			
3			

The information contained herein is the property Great Rock Automation and constitutes confidential proprietary information which shall not be used, duplicated, or disclosed to any third party without the prior written consent of Great Rock Automation.

Copyright © 2021 Great Rock Automation

Table of Contents

00 COVER 1
01 HGA-Brochure-V2 2
02.1 Part Numbering System 4
02.2 Dimensional Drawing 108656 5
02.3 CT 26461 6
02.4 HMI Wiring 28283-1 7
02.5 Wiring 25027-3 8
03 HGA-Manual 10
04 STARTUP 158

QTY 1, TAG: OU-1
PART#: H5100A3RS6000
480VAC, 100A, NEMA 3R ENCLOSURE

5% ACTIVE HARMONIC FILTER





The HarmonicGuard® Active (HGA) filter is an elite system-applied harmonic filter that minimizes harmonics to less than 5% total demand distortion (TDD) at the point of common coupling. The HGA monitors the load current and reacts to changes immediately. By injecting a counter-current, the active filter cancels out harmonics and synchronizes the current and voltage waveforms while improving power factor to near unity. One HGA filter can handle multiple non-linear, harmonic-generating loads.

Additionally, the HGA meets the demanding requirements of IEEE- 519-2014. Offering top of the line performance and mitigation, the HGA provides a lower cost and a smaller footprint than a comparable 18-pulse VFD or active front end drive.

HARMONICGUARD®
SOLUTION CENTER

TCI's HarmonicGuard Solution Center is a free harmonic analysis tool that enables users to size filtering solutions to meet harmonic and power factor requirements.
Find out more: **https://hgsc.transcoil.com/**

Features of the HarmonicGuard Active Filter

- Meets the most stringent IEEE 519-2014 requirements
- TDD reduction to less than 5% at full load
- Power factor correction
- Immediate response time to step load changes
- Ability to parallel units without any calibration
- Self-commissioning installation
- 208 V - 600 V system compatibility
- Easy to use color, touch screen HMI display
- UL Listed; cUL Listed
- Communication options include: Modbus RTU over RS485, Modbus TCP/IP, EtherNet/IP, DeviceNet, and BACNet/IP

Typical Applications for Active Filters

- Large manufacturing facilities
- Wastewater treatment plants
- Automation production facilities
- Chiller systems
- Multi-well pads

c UL US LISTED

MADE IN THE UNITED STATES OF AMERICA

Technical Specifications

Compensation Capacity (Parallel for Higher Capacity)	~~208 V, 240 V &~~ 480 V: ~~5~~100A ~~-~~; 3-phase, 60 Hz
	~~600 V: 39A - 520A; 3-phase; 60 Hz~~
Harmonic Cancellation Spectrum	To the 50th harmonic - auto-selecting
Response Time	Less than 8 ms to step load changes
Power Factor Correction	Up to 0.98 lagging
RMS Current Attenuation	Less than 10:1
Parallel Configuration	Up to six active filters can be connected in parallel*
Display	High quality touchscreen HMI with LED backlight
Communications	Modbus RTU over RS485, ~~Modbus TCP/IP, EtherNet/IP®, DeviceNet, BACnet;~~
Over Current Protection	Molded case 65 kAIC ~~and 100 kAIC circuit breakers~~
Environmental Conditions	
Ambient Temperature	~~Open Chassis, UL Type 1, and UL Type 12: 0°C (32°F) to 40°C (104°F) Derating above 40°C (104°F)~~
	UL Type 3R: 0°C (32°F) to 40°C (104°F) Derating above 40°C
Relative Humidity	95%, non-condensing
Operating Altitude	Up to 1000m (3,300 ft) without derating Up to 3000m (9,900 ft) with derating
Storage Temperature	~~Open Chassis, UL Type 1 & UL Type 12: -20°C (-4°F) to 60°C (140°F)~~
	UL Type 3R: -40°C (-40°F) to 60°C (140°F)
Enclosure Options	~~Open Chassis, UL Type 1, UL Type 12~~, UL Type 3R
Reference Technical Standards	
Agency Approvals	UL & cUL Listed
HMI Languages	English, French, Spanish
Surge Protection	ANSI C62.42

**Consult factory for larger systems.*

Non-linear Load Waveform & Injection Current

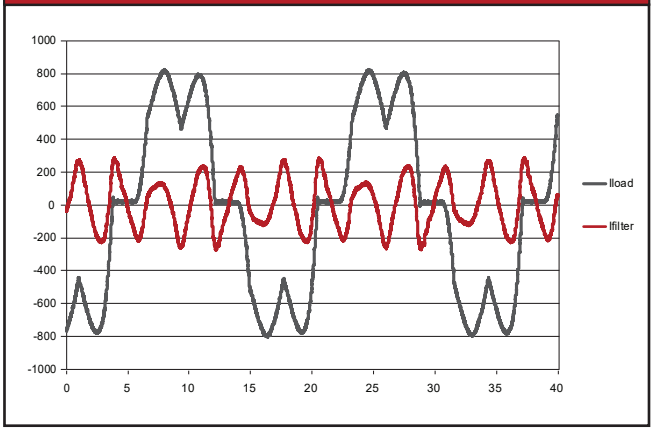

Resulting Line Current Waveform with HGA

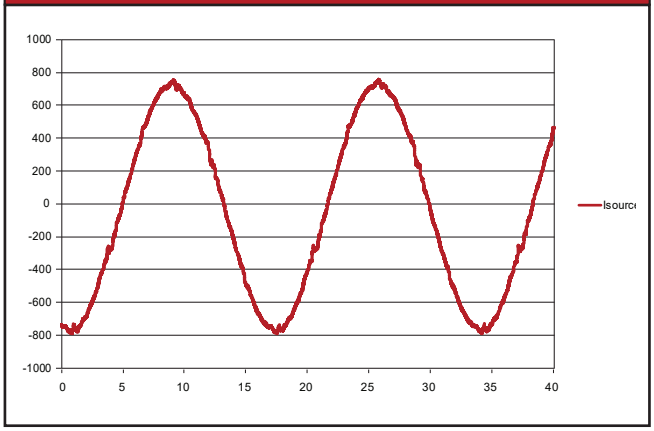

TCI, LLC
W132 N10611 Grant Drive
Germantown, WI 53022
800-824-8282 | www.transcoil.com

Part #28722
Version 2
©2019

TAG: OU-1
PART#: H5100A3RS6000
480VAC, 100A, NEMA 3R ENCLOSURE

HGA Part Numbering System – 480 V Type 12 & 3R

Temperature: 40° C
Current: 50, 100, 150, 200, 250, 300, 350, 400, 500, 600, 700
Voltage: 480 V, 240 V, 208 V
Enclosure: UL Type 12 & 3R

Figure 5 identifies the significance of each character in the HarmonicGuard® Active filter part number. An example of a completed part number would be H5150A12H0110. This designates an enclosed HarmonicGuard® Active filter that is rated for 150 amps, 480 Volts, and has an HMI Interface Module Package.

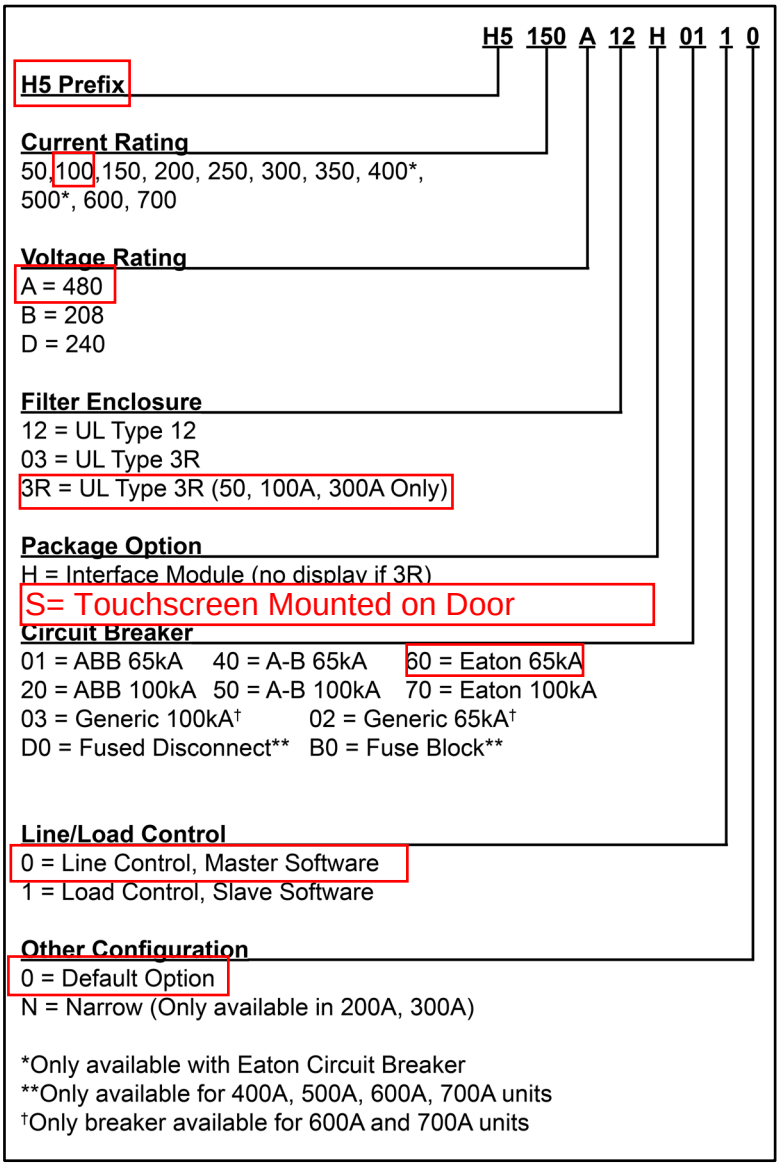

Figure 5: HarmonicGuard® Active Part Number Encoding

Note: *208 V and 240 V product versions are documented as 480 V in product description and data.*

Internal View

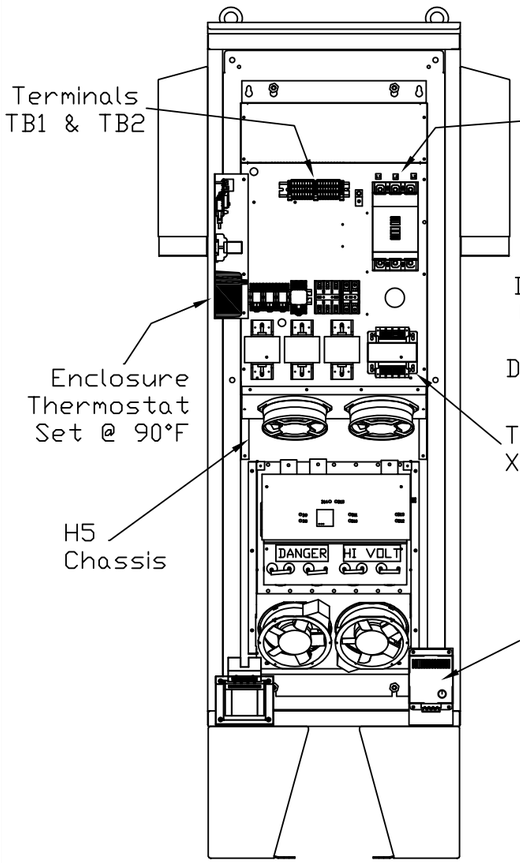

Front View

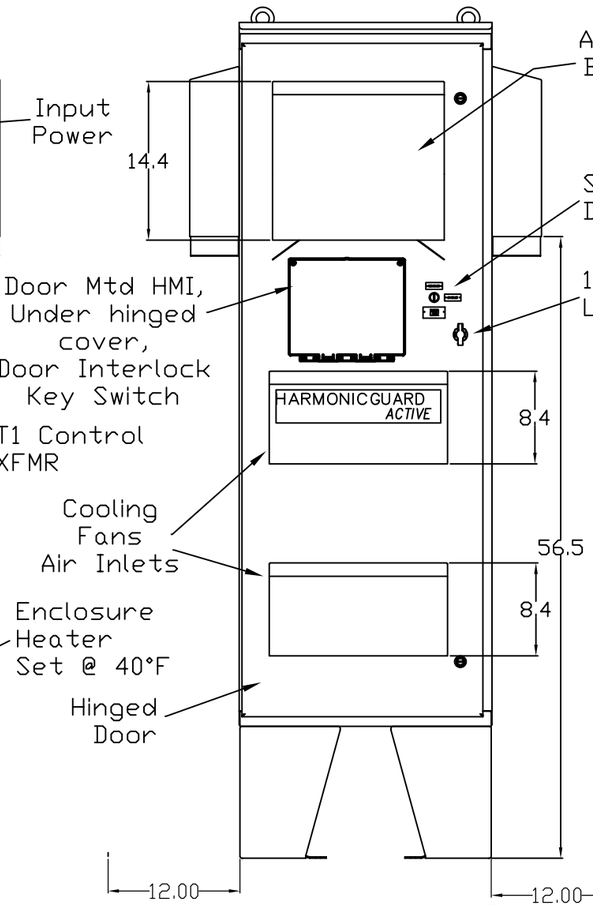

Side View

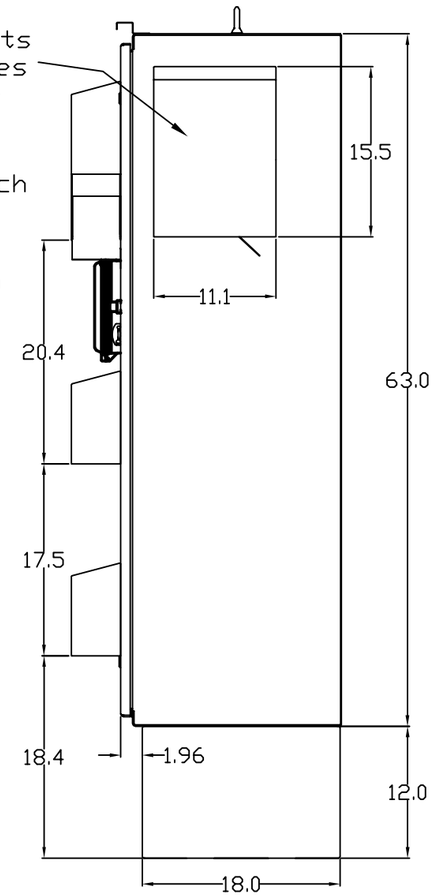

switch detail

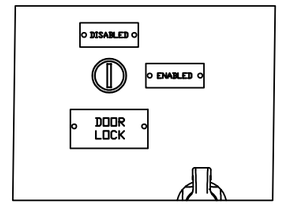

Top View

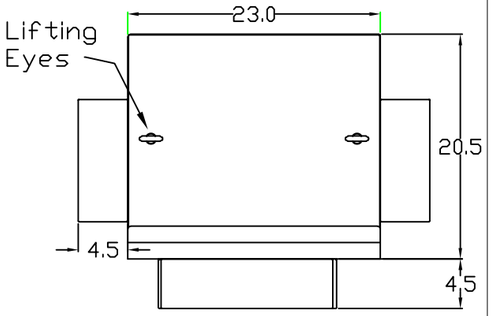

Bottom View

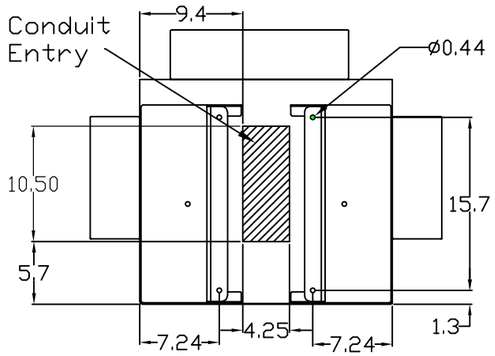

Drawings:
General Schematic: 28359
Customer Connection #25027-3
Current Transformer #26461
Remote HMI Drawing #28283-1

Notes:
Weight lbs (Kg) 685.3 (310.9)
Dimensions are in Inches
Finish: ANSI-61 Gray

The 50A unit is rated for 39A when applied with a 480V/600V autotransformer
The 100A unit is rated for 78A when applied with a 480V/600V autotransformer

Size	Watt Loss	Btu/h
50 Amp	3,050	10,407
100 Amp	3,850	13,137

TCI, LLC CLAIMS PROPRIETARY RIGHTS IN THE MATERIAL HEREIN DISCLOSED. IT IS SUPPLIED WITHOUT PREDJUDICE TO ANY PATENT RIGHTS OF TCI AND MAY NOT BE REPRODUCED OR USED TO MANUFACTURE ANYTHING SHOWN THEREIN WITHOUT WRITTEN PERMISSION FROM TCI.

NO	REVISION	DATE	BY
C	watt loss update	9/16/20	MJS
B	added switch detail window	5/28/20	MJS
A	new product	5/22/20	MJS

TOLERANCES (EXCEPT AS NOTED)
DECIMAL
.XX ±.050
.XXX±.025
FRACTIONAL
± 1/32
ANGULAR
± 1°

TCI® W132 N10611 Grant Drive
Germantown, WI 53022

Submittal/Installation Dwg, Type 3R
Active Filter, 50-100A, Door Mtd HMI

DRN. BY MJS
DATE 5/22/20
DWG. NO. 108656
SCALE N/A
SIZE A
SHT. 1 OF 1

QTY 2
PART# KCTF1200B06
6" DIAMETER CT SPLIT CORE
1200 AMP BUS

Catalog #	TCI Part #	Current Ratio	VA Rating	Burden Value (Ohms)	WT. (LBS)	A	B	C	D	E	F	G	H	I	Fig
KCTF0400B2.5	30991	400:5	15.0	0.6	1.47	2.5 (63.5)	1.0 (25.4)	1.25 (31.8)	4.82 (122.4)	5 3/4 (146.1)	6 1/2 (165.1)	0.28 (7.1)	N/A	N/A	1
KCTF0500B03	27875	500:5	25.0	1.0	1.53	2 (50.8)	.99 (25.2)	1 1/4 (31.8)	4.7 (119.4)	5 3/4 (146.1)	6 1/2 (165.1)	0.28 (7.1)	N/A	N/A	1
KCTF0800B2.5	27996	800:5	35.0	1.40	1.61	2 (50.8)	.99 (25.2)	1 1/4 (31.8)	4.7 (119.4)	5 3/4 (146.1)	6 1/2 (165.1)	0.28 (7.1)	N/A	N/A	1
KCTF1000B03	27630	1000:5	13.8	0.55	0.65	3 (76.2)	0.74 (19.1)	1 1/4 (31.8)	4.7 (119.4)	5 3/4 (146.1)	6 1/2 (165.1)	0.28 (7.1)	N/A	N/A	1
KCTF1200B03	27995	1200:5	10.0	0.40	0.73	3 (76.2)	0.74 (19.1)	1 1/4 (31.8)	4.7 (119.4)	5 3/4 (146.1)	6 1/2 (165.1)	0.28 (7.1)	N/A	N/A	1
KCTF1600C4.3	28296	1600:5	15.0	1.00	app. 3.0	4.3 (109.2)	5.9 (149.9)	2.9 (73.7)	6.2 (157.5)	3.8 (96.5)	5.7 (144.8)	0.22 (5.6)	4.9 (124.5)	2.2 (55.9)	2
KCTF2000B03	27615	2000:5	13.8	0.55	1.10	3 (76.2)	0.74 (19.1)	1 1/4 (31.8)	4.7 (119.4)	5 3/4 (146.1)	6 1/2 (165.1)	0.28 (7.1)	N/A	N/A	1
KCTF2500C4.3	27997	2500:5	20.0	0.80	app. 3.0	4.3 (109.2)	5.9 (149.9)	2.9 (73.7)	6.2 (157.5)	3.8 (96.5)	5.7 (144.8)	0.22 (5.6)	4.9 (124.5)	2.2 (55.9)	2
KCTF0800C4.3	28411	800:5	30.0	1.20	app. 3.0	4.3 (109.2)	5.9 (149.9)	2.9 (73.7)	6.2 (157.5)	3.8 (96.5)	5.7 (144.8)	0.22 (5.6)	4.9 (124.5)	2.2 (55.9)	2
KCTF1000C4.3	28513	1000:5	30.0	1.20	app. 3.0	4.3 (109.2)	5.9 (149.9)	2.9 (73.7)	6.2 (157.5)	3.8 (96.5)	5.7 (144.8)	0.22 (5.6)	4.9 (124.5)	2.2 (55.9)	2
KCTF2000C4.3	28334	2000:5	20.0	0.80	app. 3.0	4.3 (109.2)	5.9 (149.9)	2.9 (73.7)	6.2 (157.5)	3.8 (96.5)	5.7 (144.8)	0.22 (5.6)	4.9 (124.5)	2.2 (55.9)	2

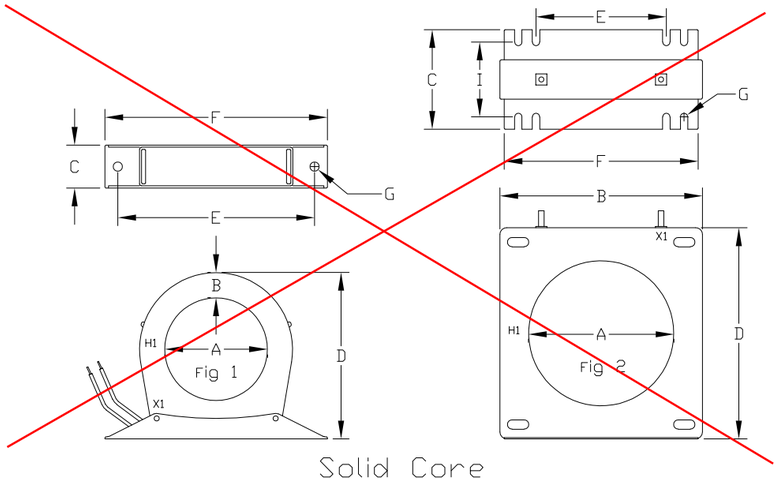

Solid Core

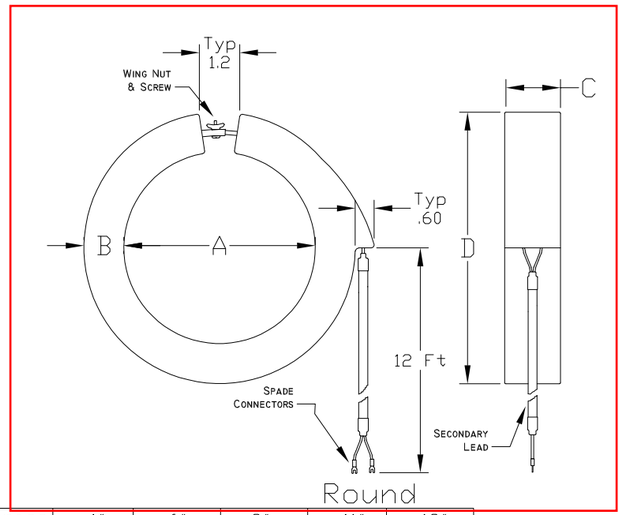

Round

Average Weight	4"	6"	8"	11"	18"
	4.0 lbs.	6.0 lbs.	7.0 lbs.	9.0 lbs.	17.0 lbs.

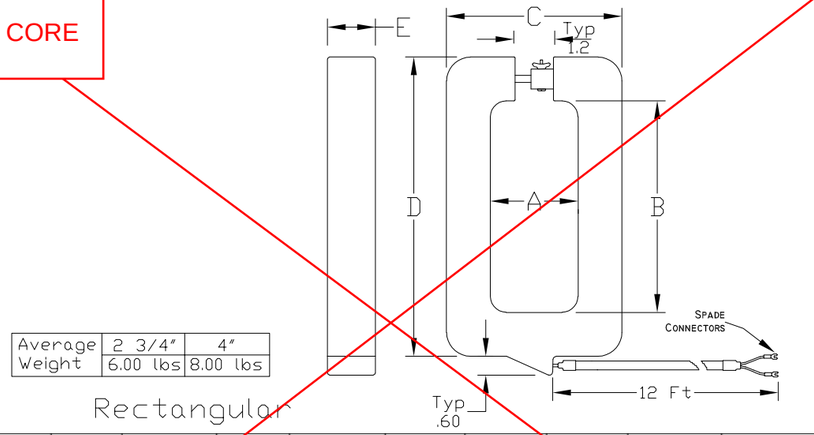

Average Weight	2 3/4"	4"
	6.00 lbs	8.00 lbs

Rectangular

Catalog #	TCI Part #	Current Ratio	VA Rating	Burden Value (Ohms)	A	B	C	D	E
KCTF0500A02	26729	500:5	2.5	0.1	2 3/4 (69.9)	6 5/8 (168.3)	5 1/2 (139.7)	9 3/8 (238.1)	1 1/2 (38.1)
KCTF0800A02	31505	800:5	5.0	0.2	2 3/4 (69.9)	6 5/8 (168.3)	5 1/2 (139.7)	9 3/8 (238.1)	1 1/2 (38.1)
KCTF1000A02	26691	1000:5	5.0	0.2	2 3/4 (69.9)	6 5/8 (168.3)	5 1/2 (139.7)	9 3/8 (238.1)	1 1/2 (38.1)
KCTF1200A02	27390	1200:5	5.0	0.2	2 3/4 (69.9)	6 5/8 (168.3)	5 1/2 (139.7)	9 3/8 (238.1)	1 1/2 (38.1)
KCTF1600A02	27755	1600:5	15	0.6	2 3/4 (69.9)	6 5/8 (168.3)	5 1/2 (139.7)	9 3/8 (238.1)	1 1/2 (38.1)
KCTF2000A02	26730	2000:5	25	1.0	2 3/4 (69.9)	6 5/8 (168.3)	5 1/2 (139.7)	9 3/8 (238.1)	1 1/2 (38.1)
KCTF3000A02	26731	3000:5	45	1.8	2 3/4 (69.9)	6 5/8 (168.3)	5 1/2 (139.7)	9 3/8 (238.1)	1 1/2 (38.1)
KCTF3000A04	31245	3000:5	45	1.8	4 (101.6)	11 (279.4)	6 1/2 (165.1)	13 3/8 (339.7)	1 1/2 (38.1)
KCTF4000A04	30701	4000:5	45.0	1.8	4 (101.6)	11 (279.4)	6 1/2 (165.1)	13 3/8 (339.7)	1 1/2 (38.1)
KCTF5000A04	26732	5000:5	45	1.8	4 (101.6)	11 (279.4)	6 1/2 (165.1)	13 3/8 (339.7)	1 1/2 (38.1)
KCTF6000A04	31245	6000:5	45	1.8	4 (101.6)	11 (279.4)	6 1/2 (165.1)	13 3/8 (339.7)	1 1/2 (38.1)

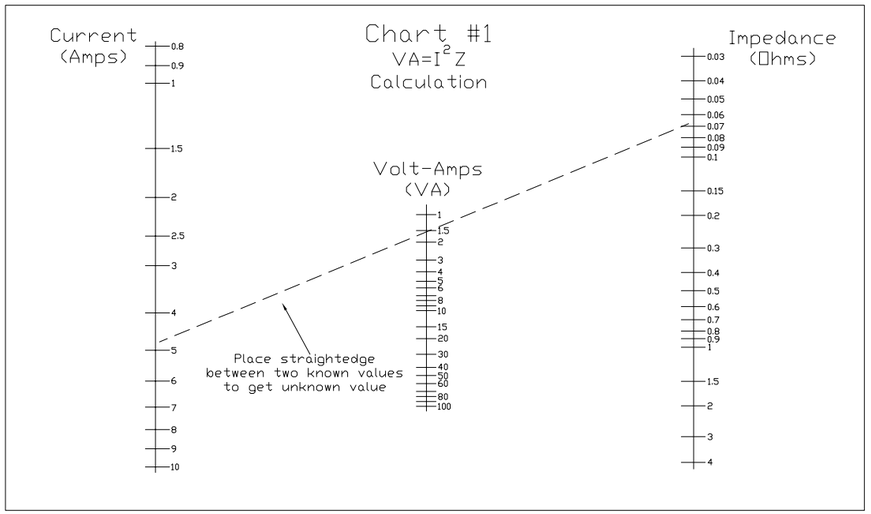

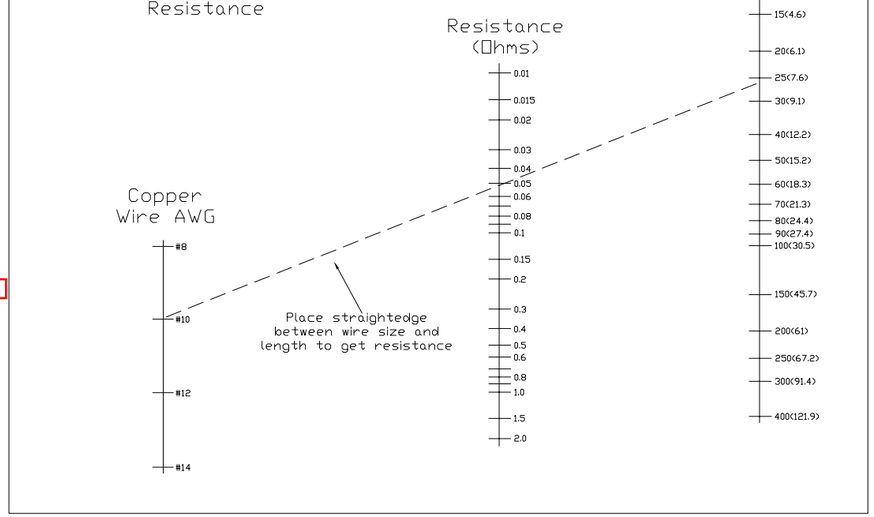

Catalog #	TCI Part #	Current Ratio	VA Rating	Burden Value (Ohms)	Dimensions in Inches (mm) A	B	C	D
KCTF0200B04	27610	200:5	2.0	0.08	4 (101.6)	1 1/4 (31.8)	1 1/2 (38.1)	6 1/2 (165.1)
KCTF0300B04	29559	300:5	2.0	0.08	4 (101.6)	1 1/4 (31.8)	1 1/2 (38.1)	6 1/2 (165.1)
KCTF0400B04	28058	400:5	2.0	0.08	4 (101.6)	1 1/4 (31.8)	1 1/2 (38.1)	6 1/2 (165.1)
KCTF0500B04	26725	500:5	3.0	0.12	4 (101.6)	1 1/4 (31.8)	1 1/2 (38.1)	6 1/2 (165.1)
KCTF0500B06	25570	500:5	3.0	0.12	6 (152.4)	1 1/4 (31.8)	1 1/2 (38.1)	8 1/2 (215.9)
KCTF0600B06	28330	600:5	5.0	0.2	6 (152.4)	1 1/4 (31.8)	1 1/2 (38.1)	8 1/2 (215.9)
KCTF0600B04	28059	600:5	5.0	0.2	4 (101.6)	1 1/4 (31.8)	1 1/2 (38.1)	6 1/2 (165.1)
KCTF0800B04	28060	800:5	5.0	0.2	4 (101.6)	1 1/4 (31.8)	1 1/2 (38.1)	6 1/2 (165.1)
KCTF1000B04	25583	1000:5	5.0	0.2	4 (101.6)	1 1/4 (31.8)	1 1/2 (38.1)	6 1/2 (165.1)
KCTF1000B06	26726	1000:5	5.0	0.2	6 (152.4)	1 1/4 (31.8)	1 1/2 (38.1)	8 1/2 (215.9)
KCTF1200B04	28081	1200:5	5.0	0.2	4 (101.6)	1 1/4 (31.8)	1 1/2 (38.1)	6 1/2 (165.1)
KCTF1200B06	29620	1200:5	5.0	0.2	6 (152.4)	1 1/4 (31.8)	1 1/2 (38.1)	8 1/2 (215.9)
KCTF1500B04	28140	1500:5	15.0	0.6	4 (101.6)	1 1/4 (31.8)	1 1/2 (38.1)	6 1/2 (165.1)
KCTF1600B04	27754	1600:5	15.0	0.6	4 (101.6)	1 1/4 (31.8)	1 1/2 (38.1)	6 1/2 (165.1)
KCTF1600B06	27949	1600:5	15.0	0.6	6 (152.4)	1 1/4 (31.8)	1 1/2 (38.1)	8 1/2 (215.9)
KCTF1600B08	27953	1600:5	15.0	0.6	8 (203.2)	1 1/4 (31.8)	1 1/2 (38.1)	10 1/2 (266.7)
KCTF2000B04	26727	2000:5	25.0	1.0	4 (101.6)	1 1/4 (31.8)	1 1/2 (38.1)	6 1/2 (165.1)
KCTF2000B06	26728	2000:5	25.0	1.0	6 (152.4)	1 1/4 (31.8)	1 1/2 (38.1)	8 1/2 (215.9)
KCTF2000B08	30691	2000:5	25.0	1.0	8 (203.2)	1 1/4 (31.8)	1 1/2 (38.1)	10 1/2 (266.7)
KCTF2500B06	29053	2500:5	35.0	1.4	6 (152.4)	1 1/4 (31.8)	1 1/2 (38.1)	8 1/2 (215.9)
KCTF3000B06	25584	3000:5	45.0	1.8	6 (152.4)	1 1/4 (31.8)	1 1/2 (38.1)	8 1/2 (215.9)
KCTF4000B06	29473	4000:5	45.0	1.8	6 (152.4)	1 1/4 (31.8)	1 1/2 (38.1)	8 1/2 (215.9)
KCTF5000B08	25585	5000:5	45.0	1.8	8 (203.2)	1 1/4 (31.8)	1 1/2 (38.1)	10 1/2 (266.7)
KCTF3000B08	28712	3000:5	45.0	1.8	8 (203.2)	1 1/4 (31.8)	1 1/2 (38.1)	10 1/2 (266.7)
KCTF6000B11	31243	6000:5	45.0	1.8	11 (279.4)	1 1/4 (31.8)	1 1/2 (38.1)	13 1/2 (342.9)
KCTF6000B18	31244	6000:5	45.0	1.8	18 (457.2)	1 1/4 (31.8)	1 1/2 (38.1)	20 1/2 (520.7)

NOTES:
1.) FREQUENCY RANGE 50-400HZ
2.) THERMAL FACTOR 1.25 @ 30 DEG C 1.0 @ 55 DEG C
3.) INSULATION 10KV FULL WAVE
4.) CAUTION, OPEN SPLIT-CORE WITH A TWISTING MOTION ONLY.
5.) DIMENSIONS ARE IN INCHES (MM).

NO	REVISION	DATE	BY
Z	ADDED KCTF4000A04	9/4/20	MJS
Y	ADD ANOTHER CT	7/24/19	MJS
X	ADD ANOTHER CT	2/21/19	MJS
W	ADDED 3 MORE CT's	10/2/18	MJS
V	ADD KCTF0400B2.5	3/7/18	MJS
U	ADDED KCTF2000B08	6/9/17	MJS

TOLERANCES (EXCEPT AS NOTED)
DECIMAL
.XX ±.04
.XXX±.020
FRACTIONAL
± 1/32
ANGULAR
± 1/2°

W132 N10611 Grant Drive
Germantown, WI 53022

Current Transformers

DRN. BY RHW | DATE 7/22/08 | DWG. NO. B 26461
SCALE NTS | APRVD. | SHT. 1 OF 1

Compact 4.3" HMI Configuration

Table 1 Display Interface PCB				
Terminal	**Pin**	**Description**	**Label**	**Rated Load**
J1	1	HMI Display	For factory use	N/A
J2	1	RS485	Ground	N/A
	2		Data + (B)	
	3		Ground	
	4		Data - (A)	
	5		Not Connected	
J3	1	Input Power	Neutral	120 VAC 250mA
	2		Line	
J5	1	Run	Normally Closed	2A @ 250VAC
	2		Common	
	3		Normally Open	
J6	1	Power On	Normally Closed	2A @ 250VAC
	2		Common	
	3		Normally Open	
J7	1	Fault	Normally Closed	2A @ 250VAC
	2		Common	
	3		Normally Open	
J12	1	At Capacity	Normally Closed	2A @ 250VAC
	2		Common	
	3		Normally Open	
J19	1	ELC Power Supply	24 VDC	24 VDC
	2		Common	
	3		Not Connected	
J20	1	Gateway Power Supply	24 VDC	24 VDC
	2		Common	
	3		Not Connected	
J22	1	Start Command	24 VDC	Contact Closure
	2		Start	
	3		Not Connected	

Optional Gateways
Front View

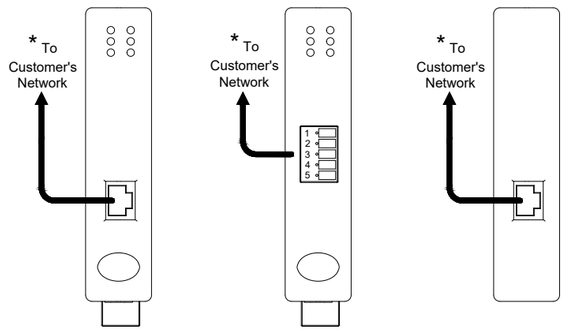

Ethernet/IP
Modbus TCP/IP
RJ45 Network
Connection

DeviceNet
Connection

BACNet
Connection

For Type 3R and ETO slave relay connections see pg 1

This diagram is for the Compact 4.3" HMI.
For the 7" HMI Configuration see pg 1

Table 3 Terminal Block TBHMI				
Terminal	Pin	Description	Label	Rated Load
TBHMI	1	Connection to Display Interface Board	RX	RS232
	2		TX	
	3	Connection to Customer Network or Gateway	D+	RS485
	4		D-	
	5	Com./GND	Com. GND	N/A

Table 2 HMI Display				
Terminal	Pin	Description		
Com 1 / Com 2	N/A	Connection to Terminal Block TBHMI		
		Description	Label	Rated Load
Power Terminal	Pos	Input Power	Positive Sign	24 Volt DC
	Neg		Negative Sign	
	Com		Common Sign	

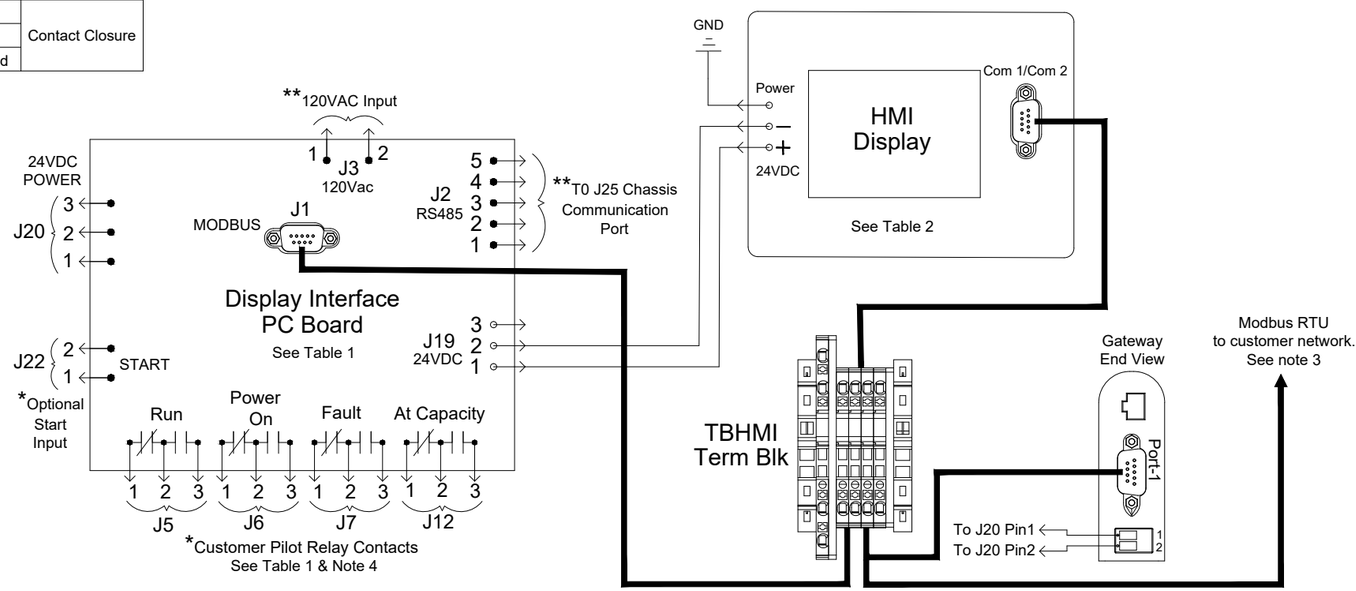

Notes:
1.) Typical customer connections noted with (*).
2.) Customer connections if mounting a HMI panel noted with (**).
3.) Available when Gateway isn't present.
4.) Display interface PCB J5, J6, J7 & J12 wire range and tightening torque is 28-14 Awg at 4.4 in-lb (.5 Nm).
5.) TBHMI wire range is 26-14 Awg (spring clamp / push in type).
6.) HMI display power terminal wire range and tightening torque is 30-12 Awg at 4.3 in-lb (.49 Nm).
7.) 120V Power J3, wire range and tightening torque is 30-12 Awg at 7 in-lb (.8 Nm).

TCI, LLC CLAIMS PROPRIETARY RIGHTS IN THE MATERIAL HEREIN DISCLOSED. IT IS SUPPLIED WITHOUT PREDJUDICE TO ANY PATENT RIGHTS OF TCI AND MAY NOT BE REPRODUCED OR USED TO MANUFACTURE ANYTHING SHOWN THEREIN WITHOUT WRITTEN PERMISSION FROM TCI

NO	REVISION	DATE	BY
	see page 1 for Revision		

TOLERANCES (EXCEPT AS NOTED)
DECIMAL
.XX ± .05
.XXX± .025
FRACTIONAL
± 1/16
ANGULAR
± 1°

TCI® W132 N10611 Grant Drive
Germantown, WI 53022

HMI, Network Communications Connection Diagram

DRN. BY	DATE	DWG. NO.
MJS	12/5/13	28283-1
SCALE N/A	SIZE B	SHT 2 OF 2

Most Common Application
Single Unit Standard Line Side CT Placement & Wiring

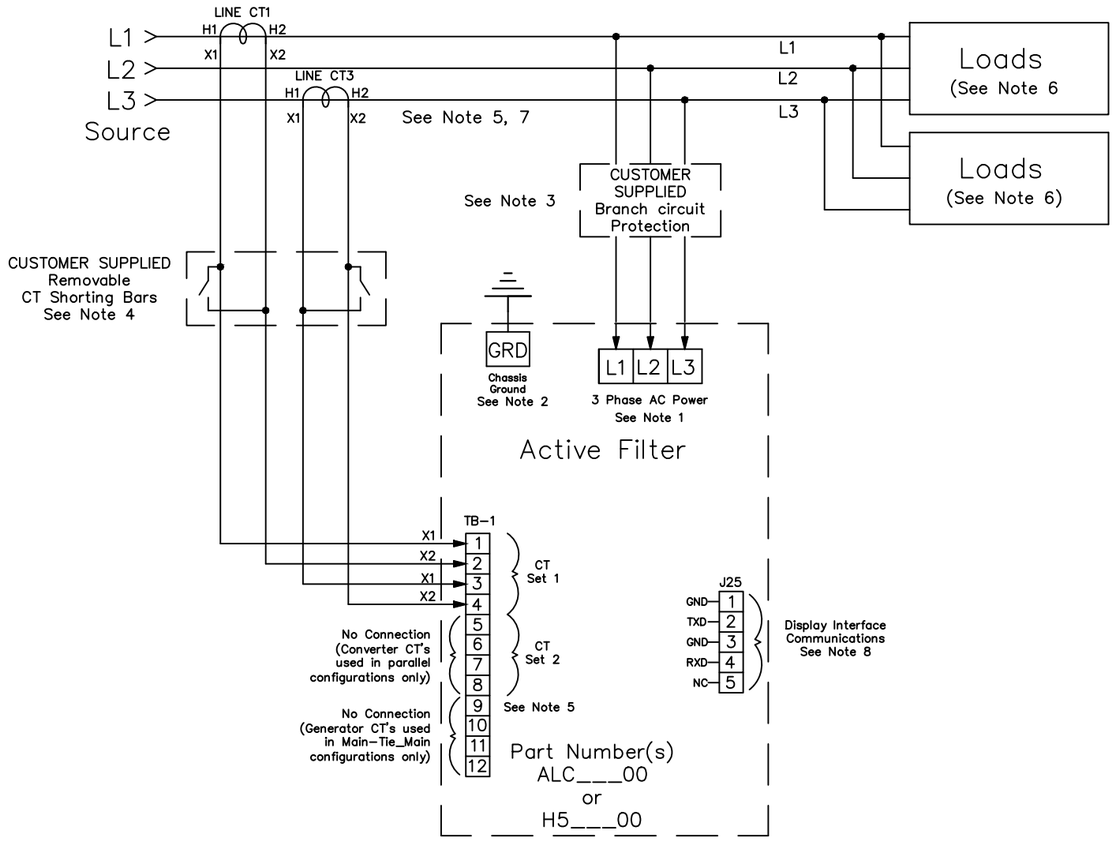

Ground Terminal Wire Size & Tightening Torque			
Filter Size	Wire Size	Torque In-Lbs (Nm)	Wire Type
45 to 100A	6 – 2/0 Awg	50 (5.7)	CU/AL
150A	6 – 2/0 Awg	50 (5.7)	CU/AL
200A**	4 – 2/0 Awg	50 (5.7)	CU/AL
250A/200A*	6 Awg – 250MCM	375 (42.4)	CU
300A**	3 Awg – 500 MCM	375 (42.4)	CU/AL
300A*/350A	(2) 4 Awg – 600 MCM	500 (57)	CU/AL
400A/500A	(2) 4 Awg – 600 MCM	500 (57)	CU
600A/700A	(3) 2 Awg – 600 MCM	500 (57)	CU/AL

* Narrow unit
** Legacy Double Converter Unit

Alternate Configuration
Single Unit Load Side CT Placement & Wiring

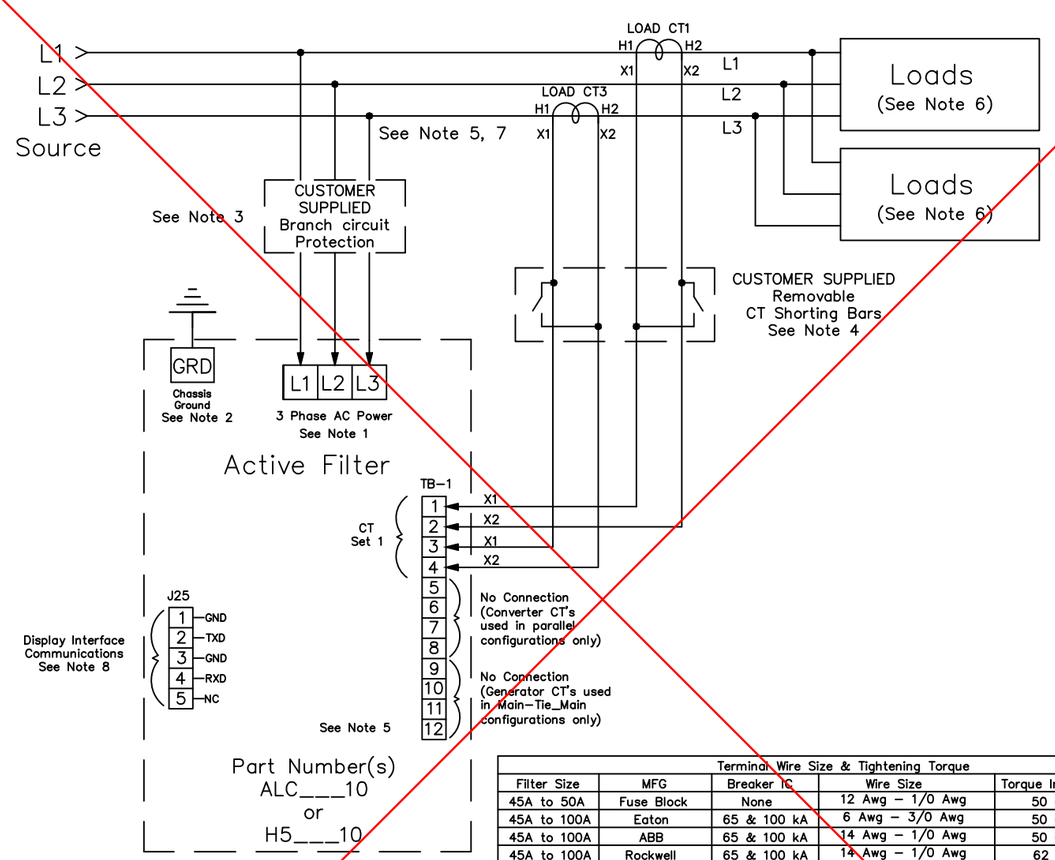

Terminal Wire Size & Tightening Torque					
Filter Size	MFG	Breaker IC	Wire Size	Torque In-Lbs (Nm)	Wire Type
45A to 50A	Fuse Block	None	12 Awg – 1/0 Awg	50 (5.7)	CU/AL
45A to 100A	Eaton	65 & 100 kA	6 Awg – 3/0 Awg	50 (5.7)	CU/AL
45A to 100A	ABB	65 & 100 kA	14 Awg – 1/0 Awg	50 (5.7)	CU/AL
45A to 100A	Rockwell	65 & 100 kA	14 Awg – 1/0 Awg	62 (7)	CU Only
45A to 100A	Terminal Block	None	14 Awg – 2/0 Awg	120 (13.6)	CU/AL
90A to 150A	Disconnect	None	4 Awg – 300 MCM	200 (23)	CU/AL
90A to 150A	Fuse Block	None	6 Awg – 250 MCM	375 (42)	CU/AL
150A/200A	Eaton	65 & 100 kA	8 Awg – 350 MCM	177 (20)	CU/AL
150A/200A	ABB	65 & 100 kA	4 Awg – 300 MCM	200 (23)	CU/AL
150A/200A	Rockwell	65 & 100 kA	4 Awg – 300 MCM	200 (23)	CU/AL
150A/200A	Terminal Block	None	3/0 Awg – 350 MCM	275 (31)	CU/AL
200A/250A	Fuse Block	None	4 Awg – 500 MCM	500 (57)	CU/AL
250A/300A	Eaton	65 & 100 kA	3 Awg – 500 MCM	375 (42)	CU/AL
250A/350A	ABB	65 & 100 kA	(2) 3/0 Awg – 250 MCM	275 (31)	CU/AL
250A/350A	Rockwell	65 & 100 kA	(2) 2/0 Awg – 250 MCM	275 (31)	CU/AL
250A/300A	Terminal Block	None	4 Awg – 500 MCM	375 (42)	CU/AL
300A/350A	Disconnect	None	(2) 6 Awg – 350 MCM	500 (57)	CU/AL
300A*/350A	Terminal Block	None	(2) 6 Awg – 250 MCM	275 (31)	CU/AL
300A*/350A	LSIS	65 & 100 kA	(2) 1/0 Awg – 750 MCM	375 (42)	CU/AL
350A to 500A	Eaton	65 & 100 kA	(2) 2 Awg – 500 MCM	375 (42)	CU/AL
400A/500A	Terminal Block	None	(2) 4 Awg – 500 MCM	450 (51)	CU/AL
400A/500A	Disconnect	None	(2) 2 Awg – 600 MCM	500 (57)	CU/AL
300A to 500A	Fuse Block	None	(2) 4 Awg – 500 MCM	450 (51)	CU/AL
600A/700A	LSIS	65 & 100 kA	(3) 3/0 Awg – 400 MCM	400 (45)	CU/AL
600A/700A	Terminal Block	None	(4) 6 Awg – 350 MCM	275 (31)	CU/AL
All	Control Terminal	All	28 Awg – 14 Awg	4.4 (0.5)	N/A

* Narrow unit

Notes:
1.) Wiring should be 75°C or higher insulated copper, with the appropriate voltage and current rating.
2.) Chassis ground must be connected to the ground of the premises wiring system, in accordance with NEC and local codes. Connection must be made using a wire conductor.
3.) Customer is responsible for branch circuit protection.
4.) Operating current transformers with the secondary winding open can result in a high voltage across the secondary terminals which may be dangerous to personnel or equipment.
5.) Current transformers should be centered around conductor.
6.) Load(s) have an integral 3% line reactance or equivalent dc bus choke to optimize Active Filter utilization, consult TCI for Active Filter capacity with less than 3%.
7.) CT's are customer installed, and external to the Active Filter.
8.) Available network interface depends on CM Module HMI option or enclosure type. Reference the HGA IOM or HMI Schematic / Connection Diagram 28283-1

TCI, LLC CLAIMS PROPRIETARY RIGHTS IN THE MATERIAL HEREIN DISCLOSED. IT IS SUPPLIED WITHOUT PREDJUDICE TO ANY PATENT RIGHTS OF TCI AND MAY NOT BE REPRODUCED OR USED TO MANUFACTURE ANYTHING SHOWN THEREIN WITHOUT WRITTEN PERMISSION FROM TCI.

NO	REVISION	DATE	BY
Q	Update tables & add 350/700	8/6/20	MJS
P	update to 12 pos TB1	4/7/20	MJS
N	Remove ** from tables	12/20/16	MJS
M	3744 Add 400A to table	9/23/16	MJS
L	250A/500A torque update	6/8/16	MJS

TOLERANCES (EXCEPT AS NOTED)
DECIMAL
.XX ±.05
.XXX±.025
FRACTIONAL
±1/32
ANGULAR
±1 °

TCI® W132 N10611 Grant Drive
Germantown, WI 53022

Diagram, Connection
Active Filter, 208 to 480V

DRN. BY	DATE	DWG. NO.
RHW	1/14/2008	25027-3
SCALE	SIZE	SHT. 1 OF 2
N/A	B	

LOCKHEED MARTIN ACTIVE FILTER

Two Filters In Parallel:
Filter #1 Has Standard Line Side CT Placement & Wiring
Filter #2 Has Load Side Factory Software

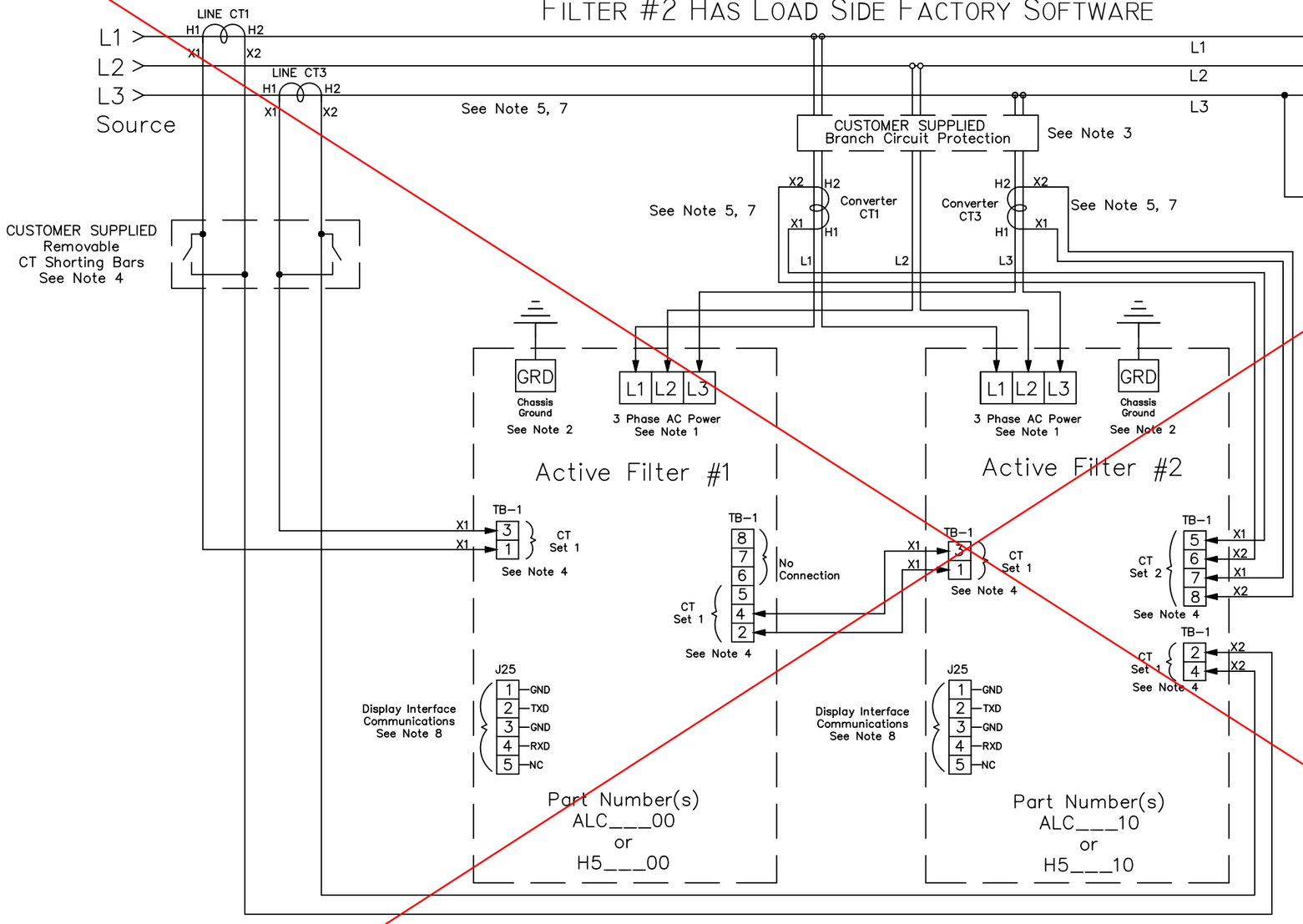

Terminal Wire Size & Tightening Torque					
Filter Size	MFG	Breaker IC	Wire Size	Torque In-Lbs (Nm)	Wire Type
45A to 50A	Fuse Block	None	12 Awg – 1/0 Awg	50 (5.7)	CU/AL
45A to 100A	Eaton	65 & 100 kA	6 Awg – 3/0 Awg	50 (5.7)	CU/AL
45A to 100A	ABB	65 & 100 kA	14 Awg – 1/0 Awg	50 (5.7)	CU/AL
45A to 100A	Rockwell	65 & 100 kA	14 Awg – 1/0 Awg	62 (7)	CU Only
45A to 100A	Terminal Block	None	14 Awg – 2/0 Awg	120 (13.6)	CU/AL
90A to 150A	Disconnect	None	4 Awg – 300 MCM	200 (23)	CU/AL
90A to 150A	Fuse Block	None	6 Awg – 250 MCM	375 (42)	CU/AL
150A/200A	Eaton	65 & 100 kA	8 Awg – 350 MCM	177 (20)	CU/AL
150A/200A	ABB	65 & 100 kA	4 Awg – 300 MCM	200 (23)	CU/AL
150A/200A	Rockwell	65 & 100 kA	4 Awg – 300 MCM	200 (23)	CU/AL
150A/200A	Terminal Block	None	3/0 Awg – 350 MCM	275 (31)	CU/AL
200A/250A	Fuse Block	None	4 Awg – 500 MCM	500 (57)	CU/AL
250A/300A	Eaton	65 & 100 kA	3 Awg – 500 MCM	375 (42)	CU/AL
250A/350A	ABB	65 & 100 kA	(2) 3/0 Awg – 250 MCM	275 (31)	CU/AL
250A/350A	Rockwell	65 & 100 kA	(2) 2/0 Awg – 250 MCM	275 (31)	CU/AL
250A/300A	Terminal Block	None	4 Awg – 500 MCM	375 (42)	CU/AL
300A/350A	Disconnect	None	(2) 6 Awg – 350 MCM	500 (57)	CU/AL
300A*/350A	Terminal Block	None	(2) 6 Awg – 250 MCM	275 (31)	CU/AL
300A*/350A	LSIS	65 & 100 kA	(2) 1/0 Awg – 750 MCM	375 (42)	CU/AL
350A to 500A	Eaton	65 & 100 kA	(2) 2 Awg – 500 MCM	375 (42)	CU/AL
400A/500A	Terminal Block	None	(2) 4 Awg – 500 MCM	450 (51)	CU/AL
400A/500A	Disconnect	None	(2) 2 Awg – 600 MCM	500 (57)	CU/AL
300A to 500A	Fuse Block	None	(2) 4 Awg – 500 MCM	450 (51)	CU/AL
600A/700A	LSIS	65 & 100 kA	(3) 3/0 Awg – 400 MCM	400 (45)	CU/AL
600A/700A	Terminal Block	None	(4) 6 Awg – 350 MCM	275 (31)	CU/AL
All	Control Terminal	All	28 Awg – 14 Awg	4.4 (0.5)	N/A

* Narrow unit

Ground Terminal Wire Size & Tightening Torque			
Filter Size	Wire Size	Torque In-Lbs (Nm)	Wire Type
45 to 100A	6 – 2/0 Awg	50 (5.7)	CU/AL
150A	6 – 2/0 Awg	50 (5.7)	CU/AL
200A**	4 – 2/0 Awg	50 (5.7)	CU/AL
250A/200A*	6 Awg – 250MCM	375 (42.4)	CU
300A**	3 Awg – 500 MCM	375 (42.4)	CU/AL
300A*/350A	(2) 4 Awg – 600 MCM	500 (57)	CU/AL
400A/500A	(2) 4 Awg – 600 MCM	500 (57)	CU
600A/700A	(3) 2 Awg – 600 MCM	500 (57)	CU/AL

* Narrow unit
** Legacy Double Converter Unit

Notes:
1.) Wiring should be 75°C or higher insulated copper, with the appropriate voltage and current rating.
2.) Chassis ground must be connected to the ground of the premises wiring system, in accordance with NEC and local codes. Connection must be made using a wire conductor.
3.) Customer is responsible for branch circuit protection.
4.) Operating current transformers with the secondary winding open can result in a high voltage across the secondary terminals which may be dangerous to personnel or equipment.
5.) Current transformers should be centered around conductor.
6.) Load(s) have an integral 3% line reactance or equivalent dc bus choke to optimize Active Filter utilization, consult TCI for Active Filter capacity with less than 3%.
7.) CT's are customer installed, and external to the Active Filter.
8.) Available network interface depends on CM Module HMI option or enclosure type. Reference the HGA IOM or HMI Schematic / Connection Diagram 28283-1

TCI, LLC CLAIMS PROPRIETARY RIGHTS IN THE MATERIAL HEREIN DISCLOSED. IT IS SUPPLIED WITHOUT PREDJUDICE TO ANY PATENT RIGHTS OF TCI AND MAY NOT BE REPRODUCED OR USED TO MANUFACTURE ANYTHING SHOWN THEREIN WITHOUT WRITTEN PERMISSION FROM TCI. PAGE 9

NO	REVISION	DATE	BY
	See Sheet 1 For Rev's		

TOLERANCES (EXCEPT AS NOTED)
DECIMAL .XX ±.03 .XXX±.010
FRACTIONAL ±1/32
ANGULAR ±1°

W132 N10611 Grant Drive
Germantown, WI 53022

Diagram, Connection
Active Filter, 208 to 480V

DRN. BY	DATE	DWG. NO.
RHW	1/14/2008	25027-3
SCALE N/A	SIZE B	LOCKHEED MARTIN ACTIVE FILTER 2

HarmonicGuard® Series Bus-Applied Active Harmonic Filter

Installation, Operation, and Maintenance Manual

TCI, LLC
W132 N10611 Grant Drive
Germantown, Wisconsin 53022

Phone: 414-357-4480
Fax: 414-357-4484
Helpline: 800-824-8282
Web Site: www.transcoil.com
© 2020 TCI, LLC All rights reserved

Product No: 26030
Effective: 06/12/20 Version: P

No part of this publication may be reproduced, stored in a retrieval system, or transmitted in any form or by any means, mechanical, electronic, photocopying, recording, or otherwise, without the prior written permission of TCI, LLC. The information in this manual is subject to change without notice. Every precaution has been taken in the preparation of this manual. TCI, LLC assumes no responsibility for errors or omissions. Neither is any liability assumed for damages resulting from the use of the information contained in this publication.

Table of Contents

1.0 HGA Quick Start Unit Software Setup for HMI Revision I 1

2.0 Safety 10

Safety Instructions Overview 10

Warnings and Cautions 10

General Safety Instructions 11

3.0 General Information 12

Intended Audience 12

General Terminology 12

Receiving Inspection 13

Storage Instructions 13

TCI Limited Warranty Policy 13

4.0 Pre-installation Planning 15

Verify the Application 15

Product Description 15

Nameplate Data 17

HGA Part Numbering System – 480 V Open and Type 1 20

HGA Part Numbering System – 480 V Type 12 & 3R 21

HGA Part Numbering System – 600 V 22

Communications Part Numbering 23

Floor Stand Options 23

Mounting an Open Chassis Unit 23

Open chassis unit cooling notes 24

Cooling Diagrams 24

UL Type 3R Unit Heating and Cooling Notes 24

Working Space 24

5.0 Installation Guidelines 25

Installation Checklist 25

Select a Suitable Location 25

Mounting 25

Wiring 25

CT Wire Recommendations 34

6.0 Filter Operation 48

Adjustments 48

Start Up (Commissioning) 48

General Operation 48

Maintenance and Service 49

Outline and Mounting Dimension Drawings 60

7.0 HMI Introduction 61

Overview 61

Additional Information 62

Receiving Inspection 62

Installation Guidelines 62

Location 62

Mounting 63

Wiring 63

Interface PCB Connections 64

HMI Display Connections 65

Initialization 68

HMI Installation Diagram 69

HMI Set-Up Instructions 70

HMI Screens 78

Network Interface 100

8.0 Maintenance 104

Clock Battery Replacement 104

Software Field Upgrades 104

9.0 Troubleshooting 105

HarmonicGuard® Active Filter Fault 105

Interface Module Problem 105

Fault Troubleshooting Notes 106

10.0 Appendix A: Ethernet/IP Gateway Option 107

Introduction 107

Wiring 107

Configuration 108

Register Map **109**
Operation **109**
HMS Gateway to PLC Master Example **110**
Required equipment **110**
Setup **110**
Programming **110**
11.0 Appendix B: Modbus TCP/IP Gateway Option **113**
Introduction **113**
Wiring **113**
Configuration **114**
Register Map and Address Offsets **115**
Operation **116**
HMS Gateway Example **116**
Required equipment **116**
Setup **117**
Programming **117**
Write To HMI **119**
12.0 Appendix C: ModbusRTU Master **120**
Introduction **120**
Wiring and Configuration **120**
13.0 Appendix D: DeviceNet Gateway Option **125**
Introduction **125**
Wiring **125**
Configuration **126**
Operation **126**
HMS Gateway Example: **127**
Hardware Requirements **127**
Software Requirements **127**
Setup **128**
Establishing Correct Network Settings **128**
RSLinx Classics Settings **129**
RSNetworx **129**
RSLogix **130**

14.0 Appendix E: Operating the HGA in a 3R Enclosure 132
Introduction 133
HGA-HMI Operation 134
15.0 Appendix F: BACnet Gateway Option 135
Introduction 135
Wiring 135
Configuration 136
Register Map 137
HMS Gateway Example 137
16.0 Appendix G: HMI Modbus RTU COM Change Instructions 140

Revision	Description	Date
A	Release	10/29/13
B	--	03/03/14
C	Added 300A Added 150A 480 V Added 150A 600 V Updated Quick Start Guide Rev. B	09/10/14
D	Updated 300A Drawings	09/26/14
E	Added Floor Stand Added 600 V 220A Added Legacy QS Guide as Appx. E Updated Watts Loss on Standard Product Ratings and Dimension Tables	11/5/14
F	Updated Quick Start Added HGA-HMI Appendix F Updated Sections 4 and 5	12/11/15
G	Added 250/500A	05/16/16
H	Corrections to Standard Product Ratings and Dimension Tables	5/19/16
J	Added 200A Narrow	10/10/16
K	Updated Communications Product Numbering Updated Watts Loss on Standard Product Ratings and Dimension Tables Updated Unit Dimensions on 600 V	07/27/17
L	Updated information on Over Temperature Protection Added Fault Codes Update Drive Applied Connection Diagram Update Circuit Breaker Trip Rating Add Appendix H- BACnet Gateway Option	12/20/17
M	Updates to Part numbering system, general formatting	04/22/19
N	Updates to formatting and addition of 350A, 600A, and 700A	09/20/19
O	Add deratings curves and updates to Part numbering system	12/10/19
P	Updates to HMI information and Part Numbering	06/12/20

We strive to provide the most up to date and accurate documentation available at the time of printing. Please visit www.transcoil.com for the most recent revision of this manual.

1.0 HGA Quick Start Unit Software Setup for HMI Revision I

Warning 	Be sure to read, understand, and follow all safety instructions.
Warning 	Only qualified electricians should carry out all electrical installation and maintenance work on the HarmonicGuard Active (HGA) filter.
Warning 	All wiring must be in accordance with the National Electrical Code (NEC) and/or any other codes that apply to the installation site.
Warning 	Disconnect all power before working on the equipment. Do not attempt any work on a powered HGA filter.
Warning 	The HGA filter and other connected equipment must be properly grounded.
Warning 	The HGA filter may receive power from two or more sources. Three-phase power is connected to the main input terminals of the HGA filter. All of these sources of power must be disconnected before working on the HGA filter.
Warning 	After switching off the power, always allow 5 minutes for the capacitors in the HGA filter and connected equipment, if applicable, to discharge before working on the HGA filter, connected equipment, or the connecting wiring. It is good practice to check with a voltmeter to make sure that all sources of power have been disconnected and that all capacitors have discharged before beginning work.

1) Verify unit external connections

Note: *If unit is configured for load side operation, reference the User Manual for Load Side CT Placement diagram.*

- Phase A, B, C power connection, with positive A-B-C phase rotation expected
- CT H1 Terminal is pointing toward the source
- CT feedback on phases A & C to TB-1
- Leave CT shorting bars in place on TB-1
- With the HGA circuit breaker open, energize the source to the HGA
- Close the HGA circuit breaker
- Fans and HMI should come on in < 5 seconds
- HMI will start on Home screen
- Load(s) have an integral 5% line reactance or equivalent DC bus choke

Warning	Hazardous Voltages are present when unit is energized

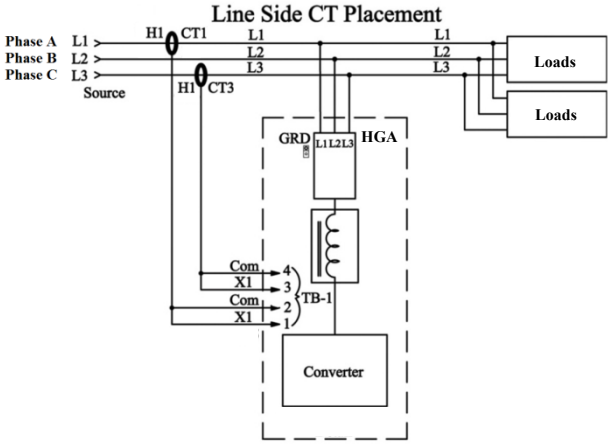

Note: Built-In Sensor Wiring Error Detection

- The active filter has an automatic sensor wiring error detection algorithm built into the controls.
- If a sensor wiring error is detected, please reference the Sensor Error Auto Detection section.

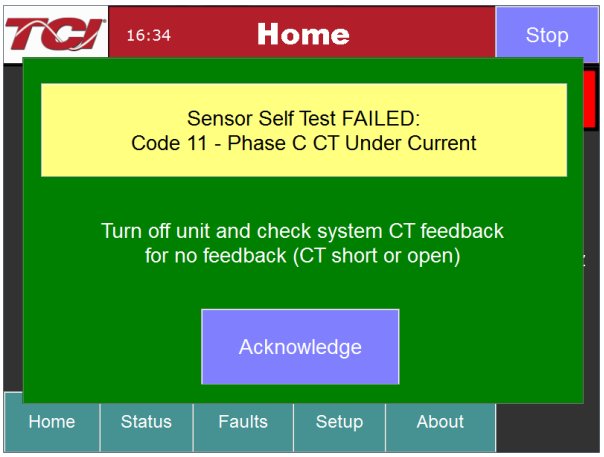

Note: Language Selection and Date / Time

- The active filter supports several languages including English, French and Spanish.
- Press “Setup” to navigate to Setup screen and press the “Language Setup” button.
- Select language setting from the language setup pop-up screen.
- Press the “Set Date and Time” button to change the configured system time.

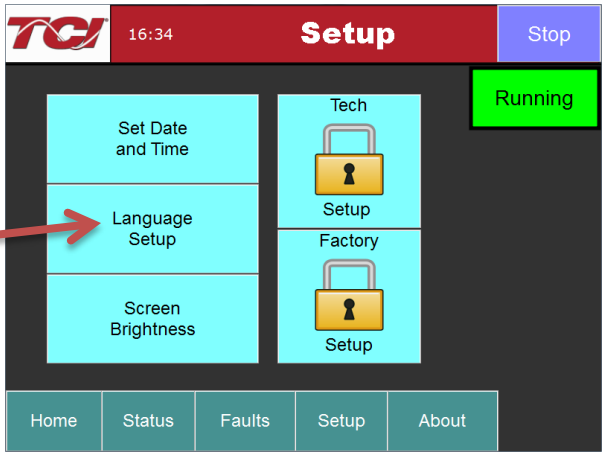

2) Converter check – 1

- Press “Password Setup” to navigate to Setup screen
- Next, select “Tech Setup” and enter the password:

  REDACTED
- Select the “Operation Modes” button

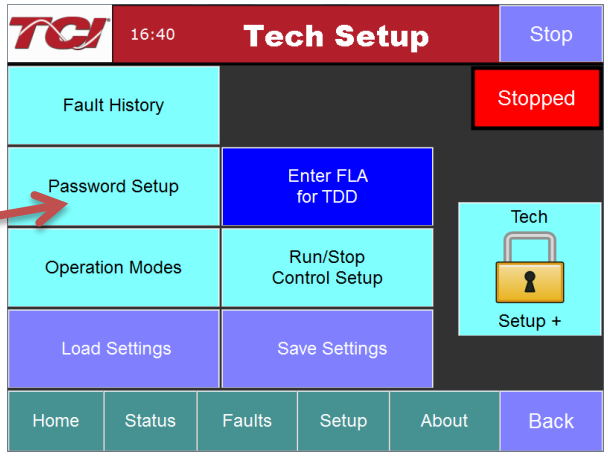

- On the “Operation Mode Setup” screen, ensure “PF Correction Enable” and “Harmonic Correction Enable” buttons are OFF (Blue). If buttons are green, press to toggle off
- Select the “CT Ratio” button and enter CT ratio to match the external current transformers wired to the unit. Select the “Back” button

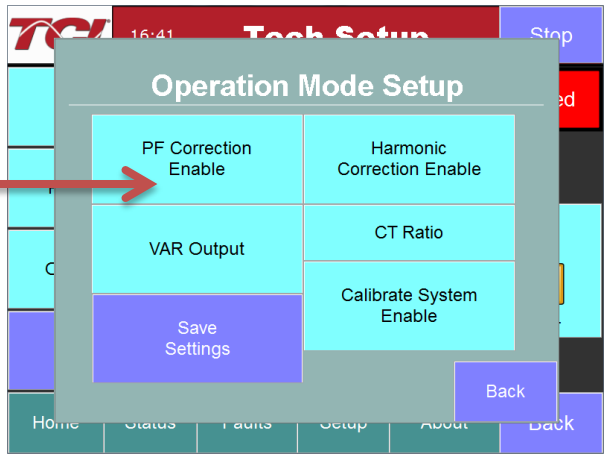

- Next, select the “VAR Output” button and ensure the “Local VAR Output Enable” and “Network VAR Output Enable” are OFF (Blue). If buttons are green, press to toggle off
- Select the “Back” buttons to return to the “Tech Setup” screen

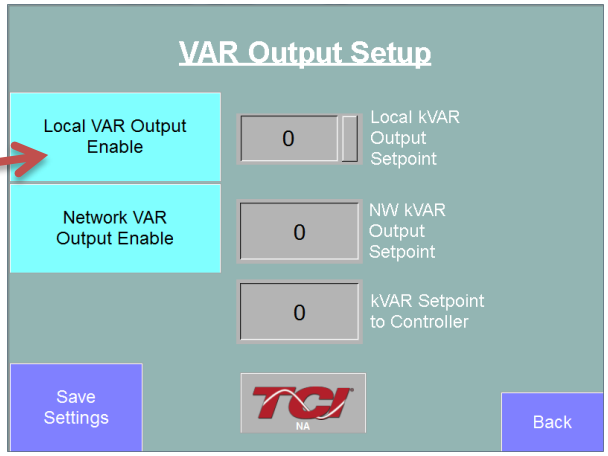

- On this pop-up screen, ensure the “Auto Start Setup” button is OFF (Blue). If button is ON (Green), press to toggle off.

- Navigate back to “Tech Setup” screen
- Now select “Save Settings”
- Press “Home” to navigate to Home screen

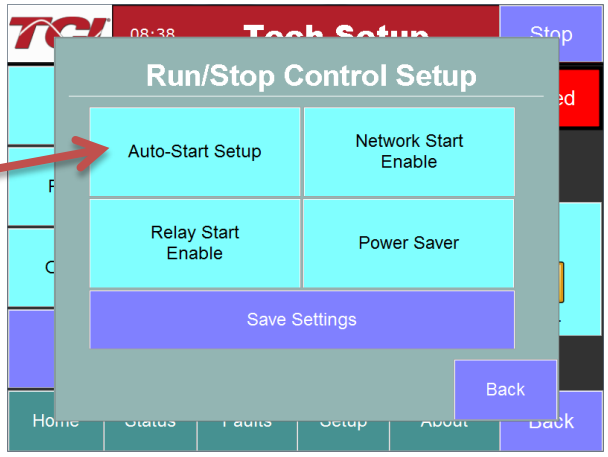

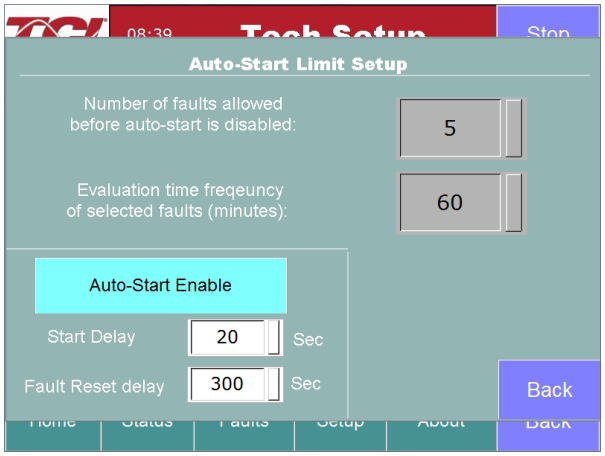

3) Home screen check

- Compare “Freq” to expected line frequency
- Compare “Voltage” to expected line Voltage
- “Current” expected to be zero because unit is not running and CT inputs are shorted
- If status indicates a Fault, press “Stop” button to reset condition

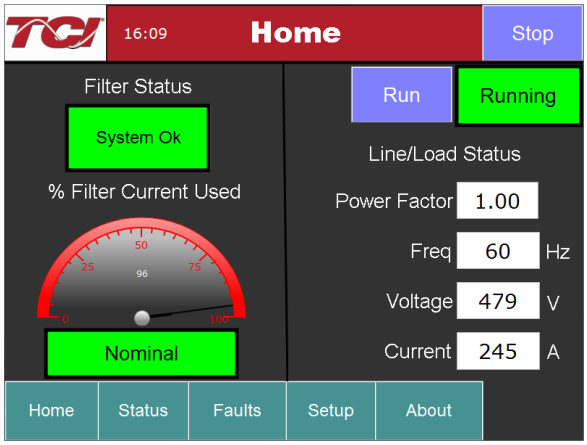

4) Status screen check

Note: *The Line/Load button and Line/Load Current Plot will say "Line" if a master/ line side unit or say "Load" if it is a slave/load side unit.*

- Press "Status" to navigate to Status screen
- Compare "Volts" to expected line Voltage
- Compare "Freq" to expected line frequency
- "Current" expected to be zero if unit is not running and CT inputs are shorted

Line Side Configured Unit

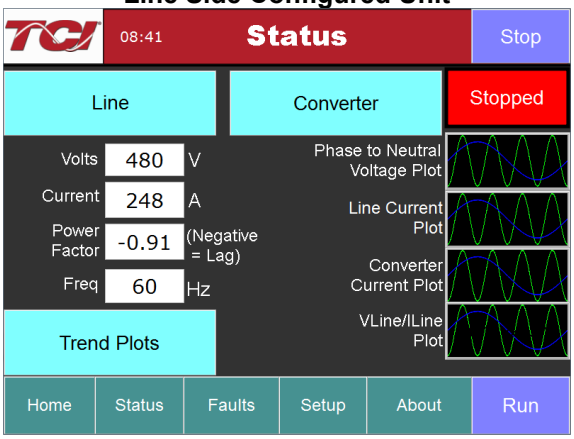

Load Side Configured Unit

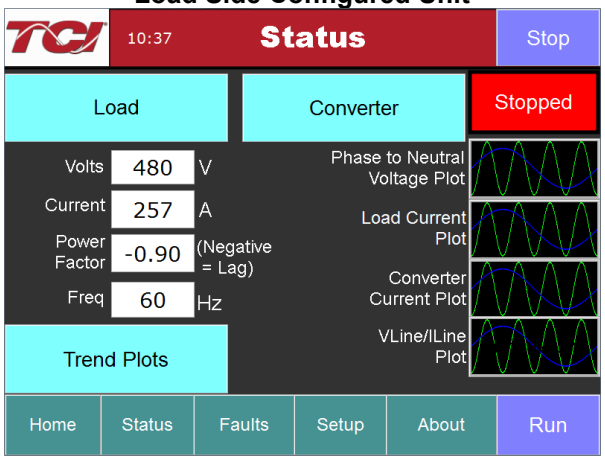

5) Phase rotation check

- Press "Phase to Neutral Voltage Plot" button
- Check that the current peaks follow the following sequence from left to right: Phase A (Green), Phase B (Blue), Phase C (Red)
- Equipment is phase rotation sensitive, if phase rotation is incorrect, power down unit and rewire to adjust phase rotation by swapping two incoming phase connections

Warning	Improper operation will occur if input Voltage phase rotation is incorrect.

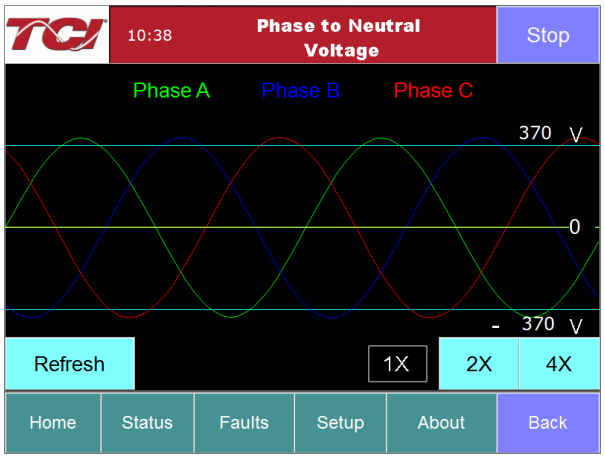

6) Running Converter

Press “Setup” to navigate to the setup screen
Select the “Tech Setup” button and enter the password:

REDACTED

- Select the “Next” button from the splash screen
- Select the “Operation Modes” button
- On the “Operation Mode Setup” screen ensure “PF Correction Enable” and “Harmonic Correction Enable” buttons are OFF (Blue). If buttons are green, press to toggle off TODO and VAR output off.
- Select the “VAR Output” button and ensure the “Local VAR Output Enable” and “Network VAR Output Enable” are OFF (Blue). Select the “Back” buttons to go back to “Tech Setup” screen
- Select the “Home” button from navigation bar
- Select the “Run” button to start unit operation

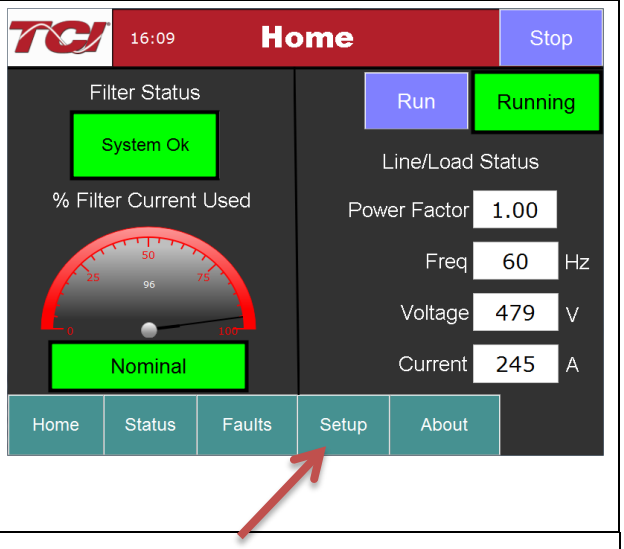

7) Remove CT shorting bars

- Press “Stop” to turn off unit
- Disconnect power from cabinet
- Turn off the built-in door breaker AND
- Turn off the upstream feeder breaker
- Open the cabinet door and remove shorting bars from CTs connected to TB-1

Warning	Lethal Voltages may be present. Wait 5 minutes for DC bus Voltage to drop to safe levels.
Warning	Check for Voltage in cabinet with a DMM before working inside cabinet.

8) Current polarity #1

- Power up unit
- From Home screen, press “Run” to turn on unit
- Press “Status” to navigate to Status screen
- Select “VLine/ILine” screen
- **Note**: Lightly loaded conditions (less than 20% CT rating) will not have enough current to show up on ILine plot
- Check that Phase A to Neutral Voltage peak lines up with Phase A current (use zoom if necessary)
- Check that Phase C to Neutral Voltage peak lines up with Phase C current
- Power system down and check CT installation location and orientation, if Phase A plots differ significantly from Phase C plots

Warning	Open circuit CT outputs can result in high Voltages and damage to equipment.

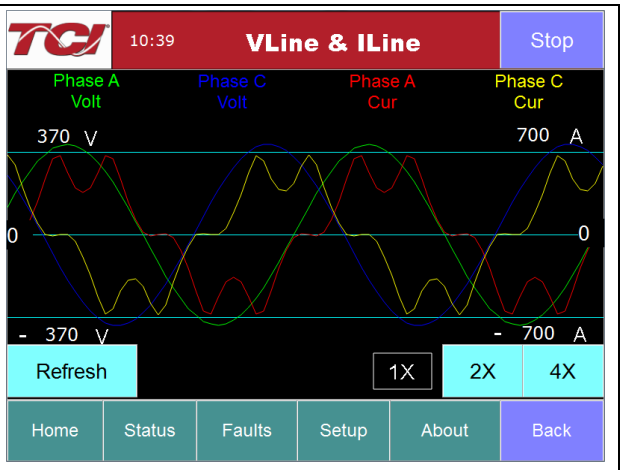

Warning	Wiring the CT incorrectly can lead to improper operation, which includes unit operating in limit and/or contributing to rather than correcting harmonics.

Note: *If using a Line Side (master) unit, the screen title will say “Line Status” and if using a Load Side (slave) unit, the screen title will say “Load Status”.* ***Also:*** *See notes under each screen.*

9) Current polarity #2

- Navigate to Status screen
- Depending on unit configuration, select either the “Line” or “Load” button
- Verify that the fields match expected values for the power system
- If they do not, verify correct CT installation

Note: *If secondary CT current is less than 1A, THID will be unavailable*

Line Side Configured Unit

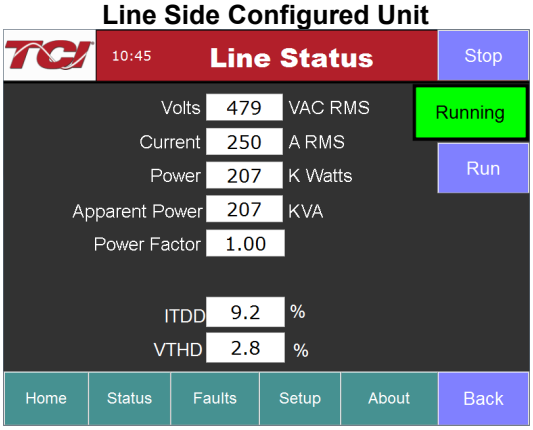

Note: *If system Voltage is less than 480 V, the THVD value will be unavailable. If CT secondary feedback current less than 1 Amp, the THID and THID Ref values will be unavailable.*

Load Side Configured Unit

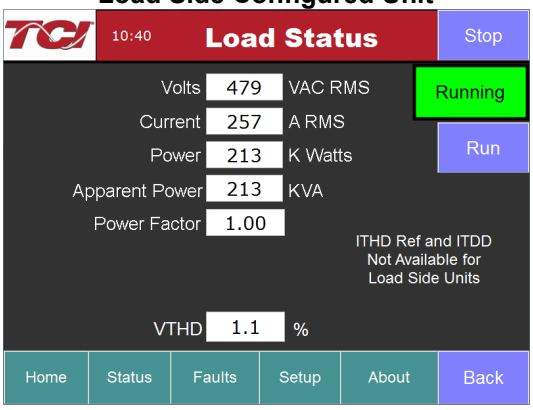

Note: *If system Voltage is less than 480 V, the THVD value will be unavailable. Load Side units do not report ITDD or THID Ref values. If CT secondary feedback current less than 1 Amp, the THID value will be unavailable.*

10) Final setup

- Press “Setup” to navigate to setup screen
- Select the “Tech Setup” button and enter the password:

  REDACTED
- Select the next button from the splash screen
- Select the “Operation Modes” button

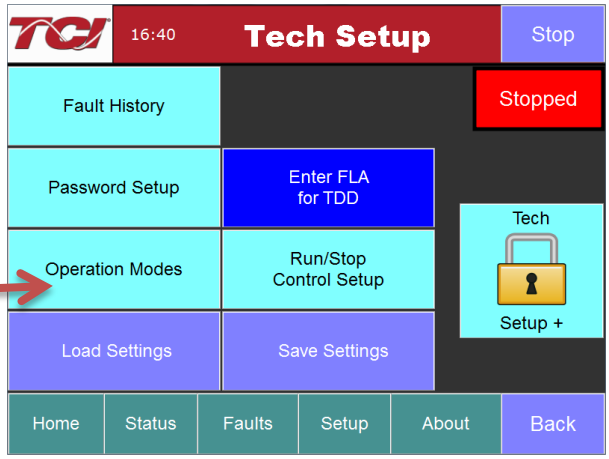

- On the “Operation Mode Setup” screen select the “Harmonic Correction Enable” button and ensure the button is ON (Green)

Note: *If unit is sized with sufficient capacity to provide power factor correction, select the “PF Correction Enable” button and ensure the button is ON (Green)*

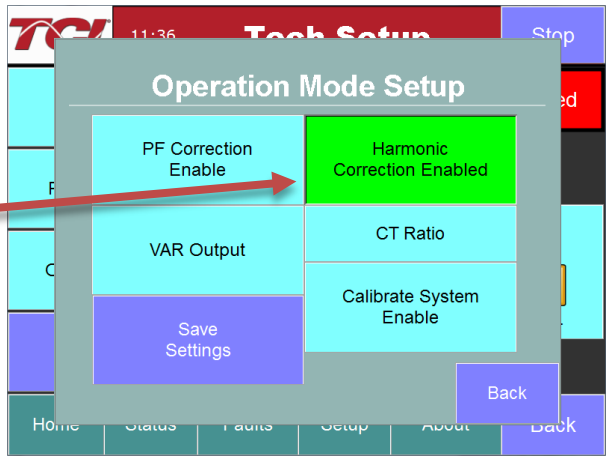

- Select the “CT Ratio” button and confirm the configured CT ratio matches the external current transformers that are wired to the unit
- Select the “Back” button and then from “Tech Setup” screen, select “Run/Stop Control Setup”

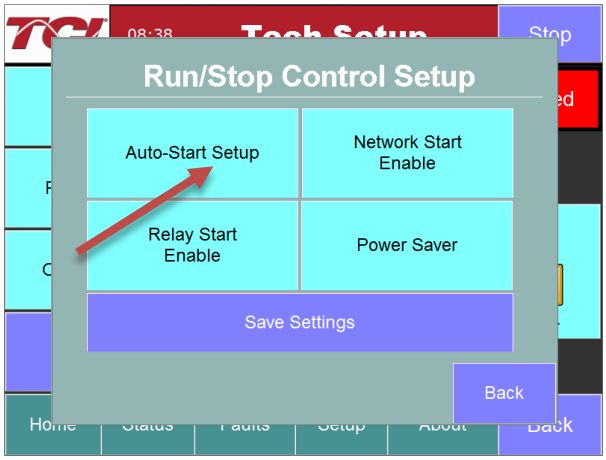

- Select “Auto-Start Setup”
- On this screen, select the “Auto-Start Enable” button and ensure the button is ON (Green)
- Navigate back to the “Tech Setup” screen and select the “Save Settings” button
- Navigate to the “Home” screen and press the Run button. The unit will start to operate. With the Auto-Start option enabled, the units will now automatically restart after future power on/off cycles of the unit or non-critical system faults

Warning	When Auto Start is enabled, unit may operate without operator input.

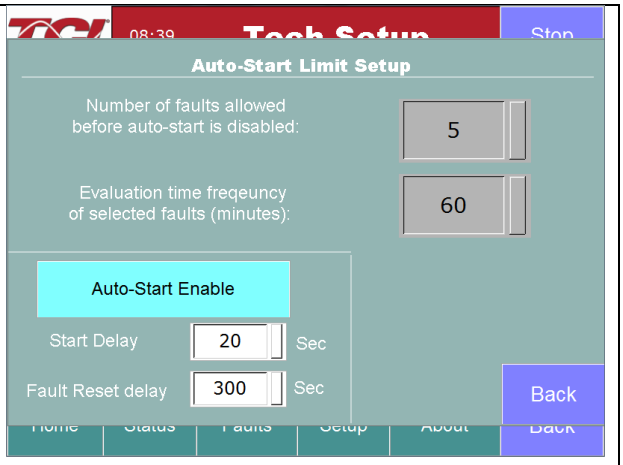

11) Final check

Note: *If unit is configured for load side operation, reference the User Manual for Load Side CT Placement diagram.*

- Navigate to the Status screen
- Navigate to Line/Load status
- Note the corrected Voltage, current, power and THD

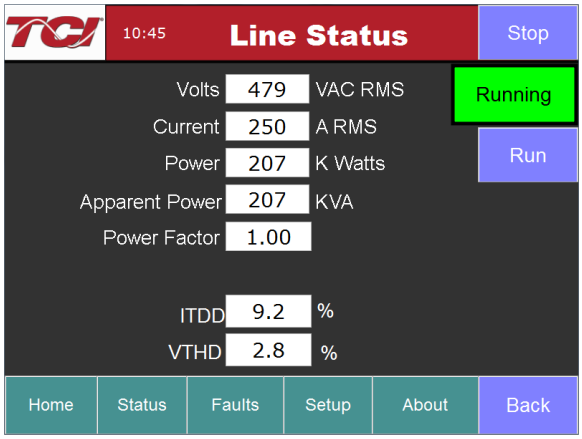

Line Side

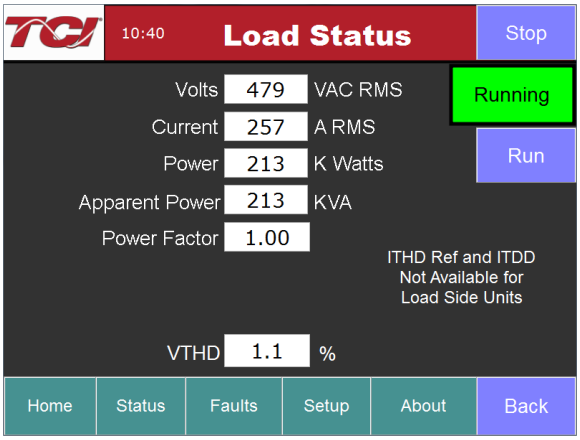

Load Side

2.0 Safety

Safety Instructions Overview

This section provides the safety instructions, which must be followed when installing, operating, and servicing the HarmonicGuard® Active (HGA) filter. If neglected, physical injury or death may follow, or damage may occur to the HGA filter or equipment connected to the HGA filter. The material in this chapter must be read and understood before attempting any work on or with the product.

The HGA filter is intended to be connected to the bus or power cables where one or more loads are connected. 3-phase power is connected to the input terminals of the unit and corrective current is supplied to the system through the HGA filter in response to the input signal being received from the CTs connected to the monitored bus. The instructions, and particularly the safety instructions for any other related equipment, must be read, understood, and followed when working on any of the equipment.

Warnings and Cautions

This manual provides two types of safety instructions. Warnings are used to call attention to instructions, which describe steps, which must be taken to avoid conditions, which can lead to a serious fault condition, physical injury, or death.

Cautions are used to call attention to instructions that describe steps that must be taken to avoid conditions that can lead to a malfunction and possible equipment damage.

Warnings

Readers are informed of situations that can result in serious physical injury and/or serious damage to equipment with warning statements marked with the following symbols:

Warning 	Dangerous Voltage Warning: warns of situations in which a high Voltage can cause physical injury and/or damage equipment. The text next to this symbol describes ways to avoid the danger.
Warning 	General Warning: warns of situations that can cause physical injury and/or damage equipment by means other than electrical. The text next to this symbol describes ways to avoid the danger.
Warning 	Many electronic components located within the filter are sensitive to static electricity. Voltages imperceptible to human touch can reduce the life, and affect performance, or destroy sensitive electronic devices. Use proper electrostatic discharge (ESD) procedures when servicing the filter and its circuit boards.

Cautions

Readers are informed of situations that can lead to a malfunction and possible equipment damage with caution statements:

Caution 	General Caution: Identifies situations that can lead to a malfunction and possible equipment damage. The text describes ways to avoid the situation.

General Safety Instructions

These safety instructions are intended for all work on the HGA filter. Additional safety instructions are provided at appropriate points on other sections of this manual.

Warning 	Be sure to read, understand, and follow all safety instructions.
Warning 	Only qualified electricians should carry out all electrical installation and maintenance work on the HGA filter.
Warning 	All wiring must be in accordance with the National Electrical Code (NEC) and/or any other codes that apply to the installation site.
Warning 	Disconnect all power before working on the equipment. Do not attempt any work on a powered HGA filter.
Warning 	The HGA filter and other connected equipment must be properly grounded.
Warning 	The HGA filter may receive power from two or more sources. 3-phase power is connected to the main input terminals of the HGA filter. All these sources of power must be disconnected before working on the HGA filter.
Warning 	After switching off the power, always allow 5 minutes for the capacitors in the HGA filter and connected equipment to discharge before working on the HGA filter, associated equipment, or the connecting wiring. It is good practice to check with a Voltmeter to make sure that all sources of power have been disconnected and that all capacitors have discharged before beginning work.

3.0 General Information

Thank you for selecting TCI's HarmonicGuard® Active filter. TCI has produced this filter for use in non-linear load applications that require input power line harmonic current reduction and power factor correction. This manual describes how to install, operate, and maintain the HarmonicGuard® Active filter.

Intended Audience

This manual is intended for use by all personnel responsible for the installation, operation, and maintenance of the HarmonicGuard® Active filter. Such personnel are expected to have knowledge of electrical wiring practices, electronic components, and electrical schematic symbols.

Caution 	This manual provides general information describing your HGA filter. Be sure to carefully review the more specific information that is provided by the drawings shipped with the unit. Information provided by the drawings takes precedence over the information provided in this manual. The ratings, dimensions, and weights given in this manual are approximate and should not be used for any purpose requiring exact data. Contact the factory in situations where certified data is required. All data is subject to change without notice.

General Terminology

Throughout this manual, many different terms are used. A list of some typical terms can be found below. These are provided in order to assist with the overall understanding of the manual. Please feel free to contact TCI directly if there are any questions regarding any portion of this manual.

HarmonicGuard® Active Filter – TCI's brand name for a real time filter that mitigates harmonics while also maintaining near unity power factor. An Active Harmonic Filter is any piece of equipment that actively monitors and changes the incoming AC line current.

HGA – The term commonly used in place of the entire brand name of HarmonicGuard® Active filter.

Active Harmonic Filter - An active harmonic filter is a piece of equipment that reads the incoming Voltage and current and injects current waveforms that cancel distortion. This term is commonly used in place of the entire brand name of HarmonicGuard® Active filter.

Bus-Applied Filter – A shunt device connected in parallel to the load. This is an active filter designed to mitigate the harmonics associated with multiple loads. The filter is directly connected to a main bus as can be found in a typical Motor Control Center. The filter is sized for the amount of corrective current needed to be injected to cancel the offending harmonics. A Digital Signal Processor (DSP) pulse width modulated controller is used for switching Insulated Gate Bipolar Transistor (IGBT) in order to cancel the harmonics.

Power Converter - The power converter is the digital filter module of the HarmonicGuard® Active filter.

Non-Linear Load Input Line Inductor – The 3-phase line reactor connected at the input of an adjustable frequency drive or other non-linear load.

Converter Inductor – The 3-phase inductor maintains a uniform air gap to give highly consistent and predictable inductance. These inductors are connected to the inverter, which buffers the inverter output from the analog portion of the filter, the source, and connected equipment.

Current Transformer (CT) – The device that monitors the incoming AC current waveform typically sized to handle the total connected load.

Receiving Inspection

The HarmonicGuard® Active filter has been thoroughly inspected and functionally tested at the factory and carefully packaged for shipment. When you receive the unit, you should immediately inspect the shipping container and report any damage to the carrier that delivered the unit. Verify that the part number of the unit you received is the same as the part number listed on your purchase order.

Storage Instructions

If the HarmonicGuard® Active filter is to be stored before use, be sure that it is stored in a location that conforms to published storage humidity and temperature specifications stated in this manual. Store the unit in its original packaging.

In the case of long-term storage, defined as any period greater than eighteen (18) months, TCI Technical Support must be contacted prior to applying power.

TCI Limited Warranty Policy

TCI, LLC ("TCI") warrants to the original purchaser only that its products will be free from defects in materials and workmanship under normal use and service for a period originating on the date of shipment from TCI and expiring at the end of the period described below:

Product Family	Warranty Period
KLR, KDR	For the life of the drive with which they are installed.
HGA, KLC, KLCUL, KMG, MSD, V1k	One (1) year of useful service, not to exceed 18 months from the date of shipment.
PF Guard, HGP, HGL, HG7, HSD, KRF	Three (3) years from the date of shipment.
KCAP, KTR,	Five (5) years from the date of shipment.
All Other Products	One (1) year of useful service, not to exceed 18 months from the date of shipment.

The foregoing limited warranty is TCI's sole warranty with respect to its products and TCI makes no other warranty, representation, or promise as to the quality or performance of TCI's products. THIS EXPRESS LIMITED WARRANTY IS GIVEN IN LIEU OF AND EXCLUDES ANY AND ALL EXPRESS OR IMPLIED WARRANTIES INCLUDING, WITHOUT LIMITATION, ANY IMPLIED WARRANTY OF MERCHANTABILITY OR FITNESS FOR A PARTICULAR PURPOSE.

This warranty shall not apply if the product was:

a) Altered or repaired by anyone other than TCI;
b) Applied or used for situations other than those originally specified; or
c) Subjected to negligence, accident, or damage by circumstances beyond TCI's control, including but not limited to, improper storage, installation, operation, or maintenance.

If, within the warranty period, any product shall be found in TCI's reasonable judgment to be defective, TCI's liability and the Buyer's exclusive remedy under this warranty is expressly limited, at TCI's option, to (i) repair or replacement of that product, or (ii) return of the product and refund of the purchase price. Such remedy shall be Buyer's sole and exclusive remedy. TCI SHALL NOT, IN ANY EVENT, BE LIABLE FOR INCIDENTAL DAMAGES OR FOR CONSEQUENTIAL DAMAGES INCLUDING, BUT NOT LIMITED TO, LOSS OF INCOME, LOSS OF TIME, LOST

SALES, INJURY TO PERSONAL PROPERTY, LIABILITY BUYER INCURS WITH RESPECT TO ANY OTHER PERSON, LOSS OF USE OF THE PRODUCT OR FOR ANY OTHER TYPE OR FORM OF CONSEQUENTIAL DAMAGE OR ECONOMIC LOSS.

The foregoing warranties do not cover reimbursement for removal, transportation, reinstallation, or any other expenses that may be incurred in connection with the repair or replacement of the TCI product.

The employees and sales agents of TCI are not authorized to make additional warranties about TCI's products. TCI's employees and sales agents' oral statements do not constitute warranties; these shall not be relied upon by the Buyer and are not part of any contract for sale. All warranties of TCI embodied in this writing and no other warranties are given beyond those set forth herein.

TCI will not accept the return of any product without its prior written approval. Please consult TCI Customer Service for instructions on the Return Authorization Procedure.

4.0 Pre-installation Planning

Verify the Application

HGA Ratings

Make sure that the HarmonicGuard® Active filter is correct for the application and sized for load. The Voltage ratings of the HGA must match the input Voltage rating of the connected AC bus.

Seismic Compliance

TCI offers the seismic anchoring drawings for both wall and floor mounting Type 1 HGA filters to meet compliance of a seismic value (Sds) equal to or less than 1.00. If the project location has a higher seismic value, contact a representative at TCI for further assistance with new documentation.

Product Description

The HarmonicGuard® Active filter is an active harmonic filter designed and developed by TCI to relieve the power distribution system of the issues associated with harmonic currents that flow within the power distribution network caused by non-linear loads. The typical configuration can be found in Figure 1**.**

The topology of the bus-applied (3-phase, three wire) HGA consists of major components or modules:

Component 1 is made up of two current transformers (CTs) installed on phases A and C of the AC bus that is to be acted upon by the filter. The purpose of the CTs are to supply information to the HGA regarding the integrity of the composite AC bus current with regard to the distortion (non-sinusoidal waveform) and displacement power factor relative to the AC bus Voltage. These signals will result in the HGA injecting currents that will return the AC line current to near sinusoidal shape and at unity power factor. Note, that the CTs are located outside the HGA enclosure.

Component 2 is the HGA input circuit breaker (optional). This is provided to protect the HGA for destructive over current conditions if a malfunction occurs within the HGA circuitry. It also provides a convenient disconnect means and field wiring point for the installer of the filter equipment.

Components 3 and 4 are the high frequency converter inductors. These inductors provide the proper inductance to the power converter.

Component 5 is the power electronic converter module. The Power converter module (PCM) is the heart of the HarmonicGuard® Active filter and is what differentiates the HGA from other types of harmonic mitigation. The PCM provides several highly complex electronic functions controlled by the on-board DSP controller. The PCM continuously senses the AC bus line Voltage and currents, processes the information at “nearly real time” by means of the instructions resident within the DSP program code, properly controls the six IGBT’s to operate in a safe manner that injects current into the AC bus grid that ensures the AC bus current is sinusoidal and near unity power factor. Power converter contains a pre-charge circuit, which consists of two SCRS and two pre-charging resistances, which control the inrush current.

Filter Configuration

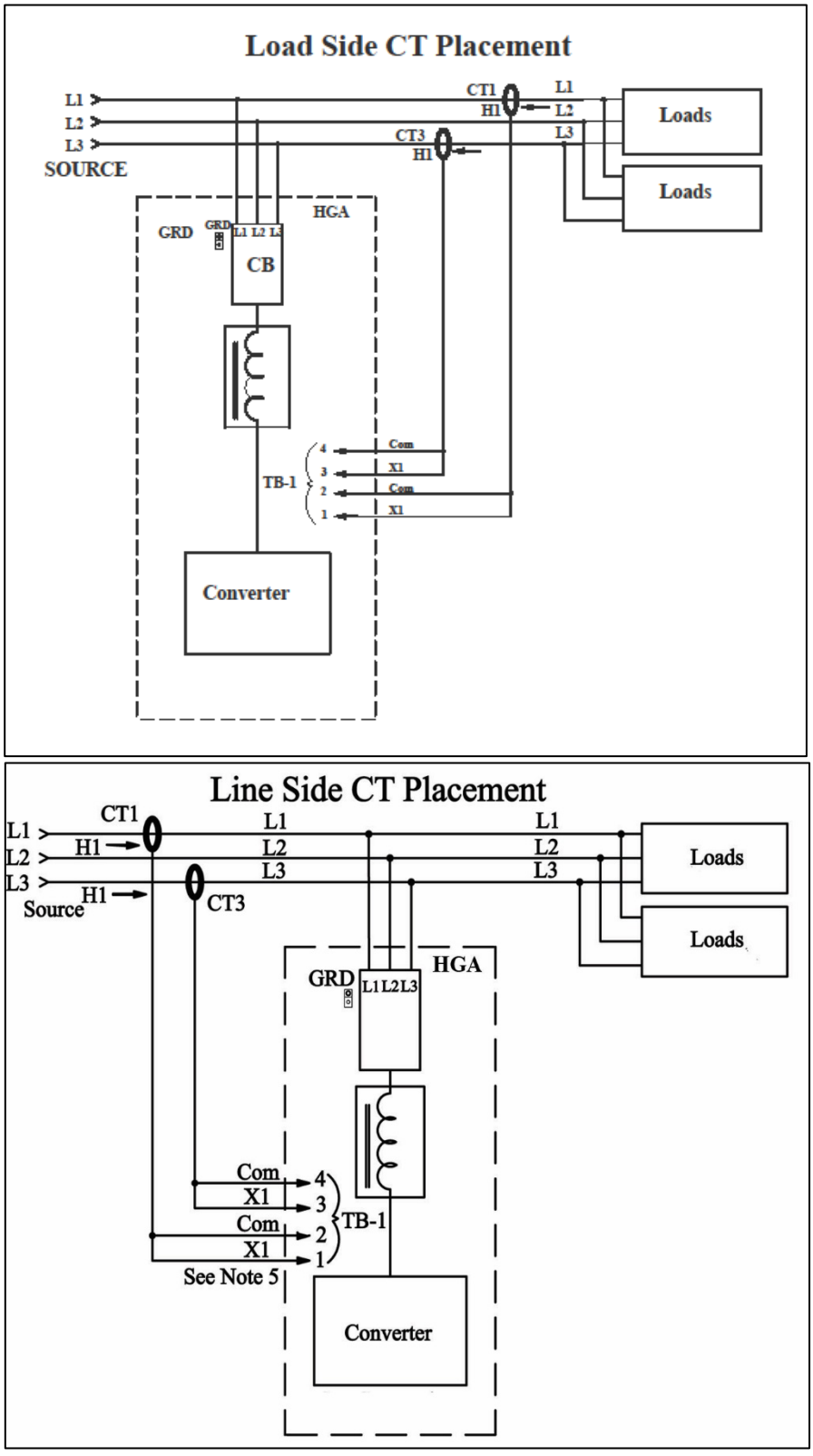

Figure 1: Typical Configuration of the HarmonicGuard® Active Filter

*This drawing is for general reference only. Use the drawings supplied with the unit for installation.

Nameplate Data

Figure 2 shows a typical HarmonicGuard® Active filter nameplate. The following information is marked on the nameplate:

- Part number: Encoding is explained in following pages.
- Corrective Current: The maximum amount of RMS Corrective Current the unit can deliver.
- System Voltage: The rated 3-phase line Voltage (RMS Volts)
- Hz: The rated frequency (60 Hz)
- Phase: 3, 3 Wire – The HGA is designed for use with only 3 wire systems with balanced 3-phase Voltage source.
- Drawing #: Outline and mounting dimension drawing number
- Schematic #: Schematic diagram drawing number
- Serial #: For unit tracking purposes
- Enclosure Type:
  UL508 - Open, UL Type 1
  UL508A – UL Type 3R and UL Type 12 Enclosures

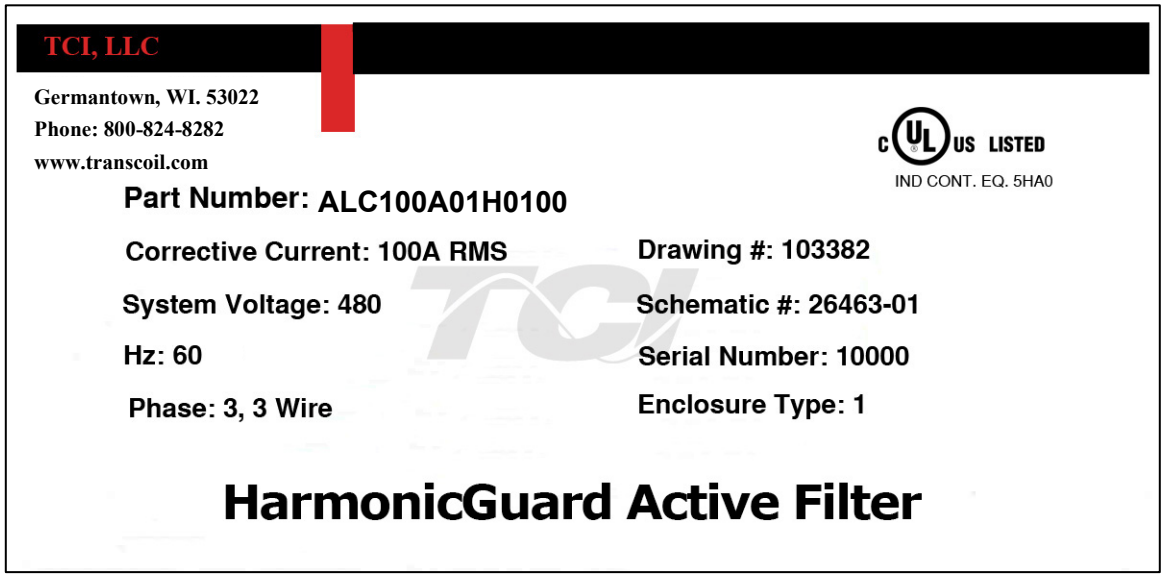

Figure 2: Typical HarmonicGuard® Nameplate

Table 1: HarmonicGuard® Active Filter Technical Specifications

Compensation Capacity (Parallel for Higher Capacity)	208 V, 240 V & 480 V: 50A – 700A, 3-phase, 60 Hz
	600 V: 39A – 520A; 3-phase; 60 Hz
Harmonic Cancellation Spectrum	To the 50th harmonic – auto-selecting
Response Time	Less than 8 ms to step load changes
Power Factor Correction	Up to 0.98 lagging
RMS Current Attenuation	Less than 10:1
Parallel Configuration	Up to six active filters can be connected in parallel*
Display	High quality touchscreen HMI with LED Backlight
Communications	Modbus RTU over RS485, Modbus TCP/IP, EtherNet/IP, DeviceNet, BACnet;
Over Current Protection	Molded case 65 kAIC and 100 kAIC circuit breakers
Environmental Conditions	
Ambient Temperature	Open Chassis, UL Type 1, and UL Type 12: 0°C (32°F) to 40°C (104°F) Derating above 40°C (104°F)
	UL Type 3R: -20°C (-4°F) to 40°C (104°F) Derating above 40°C
Relative Humidity	95%, non-condensing
Operating Altitude	Up to 1000m (3,300 ft) without derating Up to 3000m (9,900 ft) with derating
Storage Temperature	Open Chassis, UL Type 1 & UL Type 12: -20°C (-4°F) to 60°C (140°F)
	UL Type 3R: -40°C (-40°F) to 60°C (140°F) UL Type 3R with HMI: 0°C (32°F) to 40°C (104°F)
Enclosure Options	Open Chassis, UL Type 1, UL Type 12, UL Type 3R
Reference Technical Standards	
Agency Approvals	UL & cUL Listed
HMI Languages	English, French, Spanish
Surge Protection	ANSI C62.42

*Please consult TCI regarding optimum filter performance when applied to DC drives

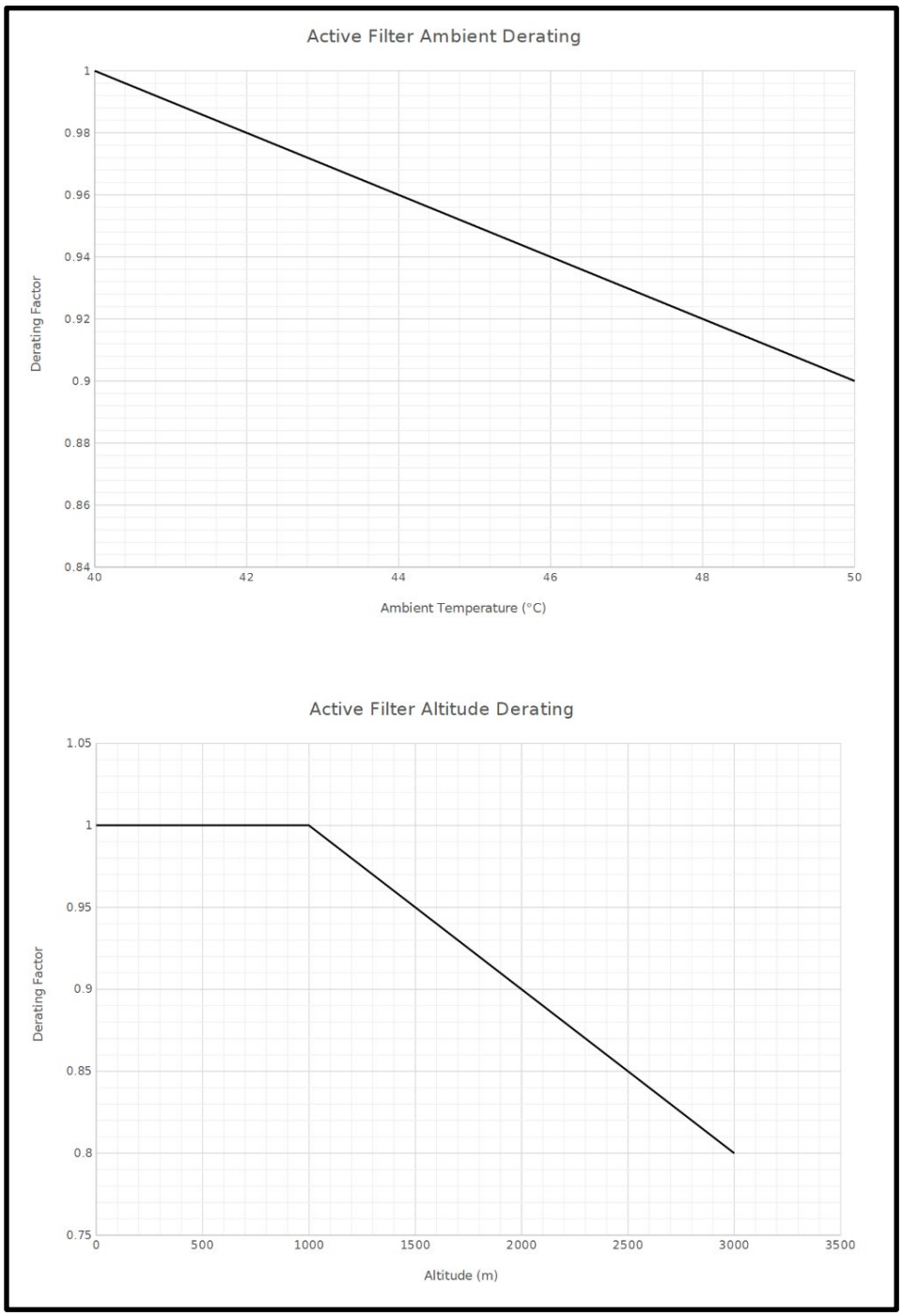

Figure 3: Altitude and Ambient Temperature Derating

HGA Part Numbering System – 480 V Open and Type 1

Temperature: 40° C
Current: 50, 100, 150, 200, 250, 300, 350, 400, 500, 600, 700
Voltage: 480 V, 240 V, 208 V
Enclosure: Open Chassis or UL Type 1

Figure 4 identifies the significance of each character in the HarmonicGuard® Active filter part number. An example of a completed part number would be ALC100A01H0010. This designates an enclosed HarmonicGuard® Active filter that is rated for 100 amps, 480 Volts, and has an HMI Interface Module Package.

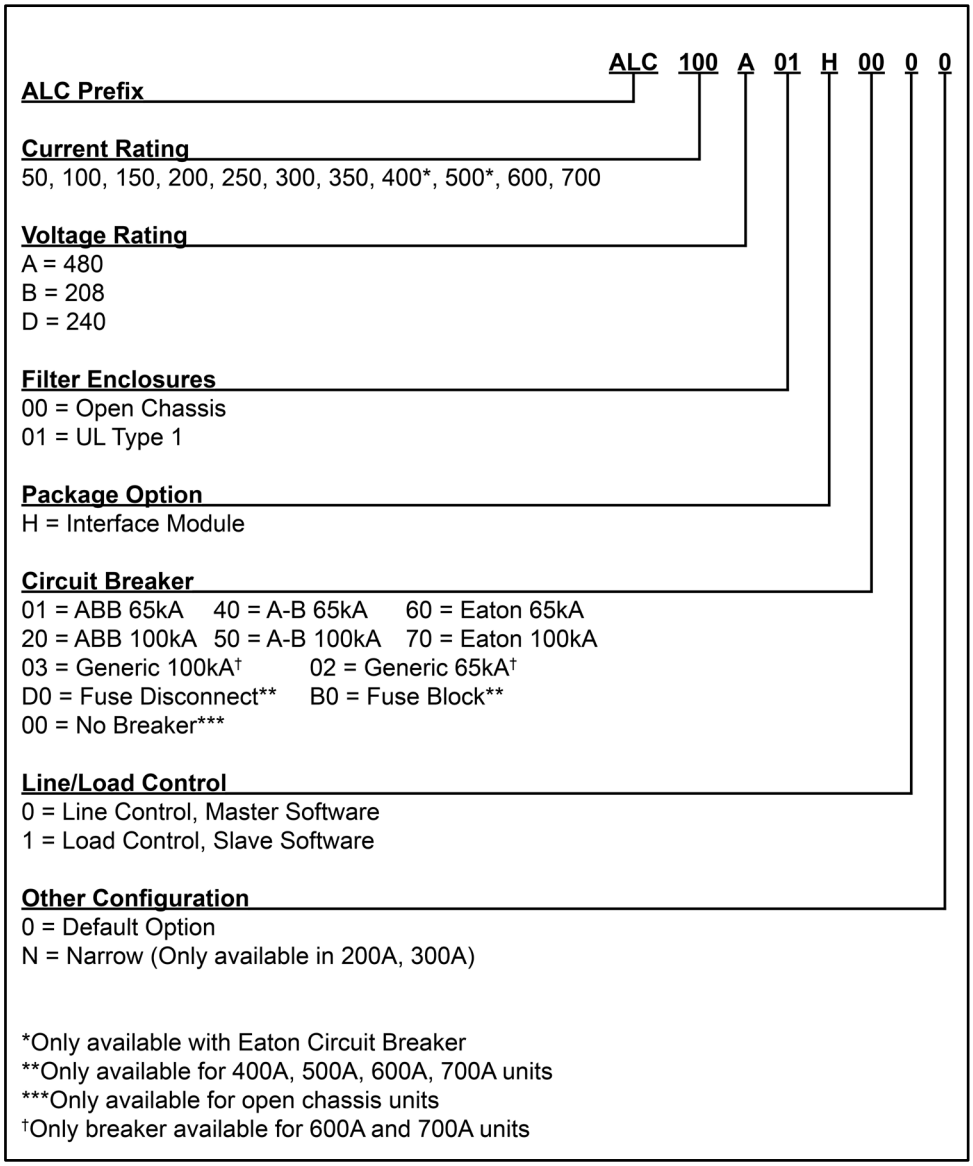

Figure 4: HarmonicGuard® Active Part Number Encoding

Note: *208 V and 240 V product versions are documented as 480 V in product description and data.*

HGA Part Numbering System – 480 V Type 12 & 3R

Temperature: 40° C
Current: 50, 100, 150, 200, 250, 300, 350, 400, 500, 600, 700
Voltage: 480 V, 240 V, 208 V
Enclosure: UL Type 12 & 3R

Figure 5 identifies the significance of each character in the HarmonicGuard® Active filter part number. An example of a completed part number would be H5150A12H0110. This designates an enclosed HarmonicGuard® Active filter that is rated for 150 amps, 480 Volts, and has an HMI Interface Module Package.

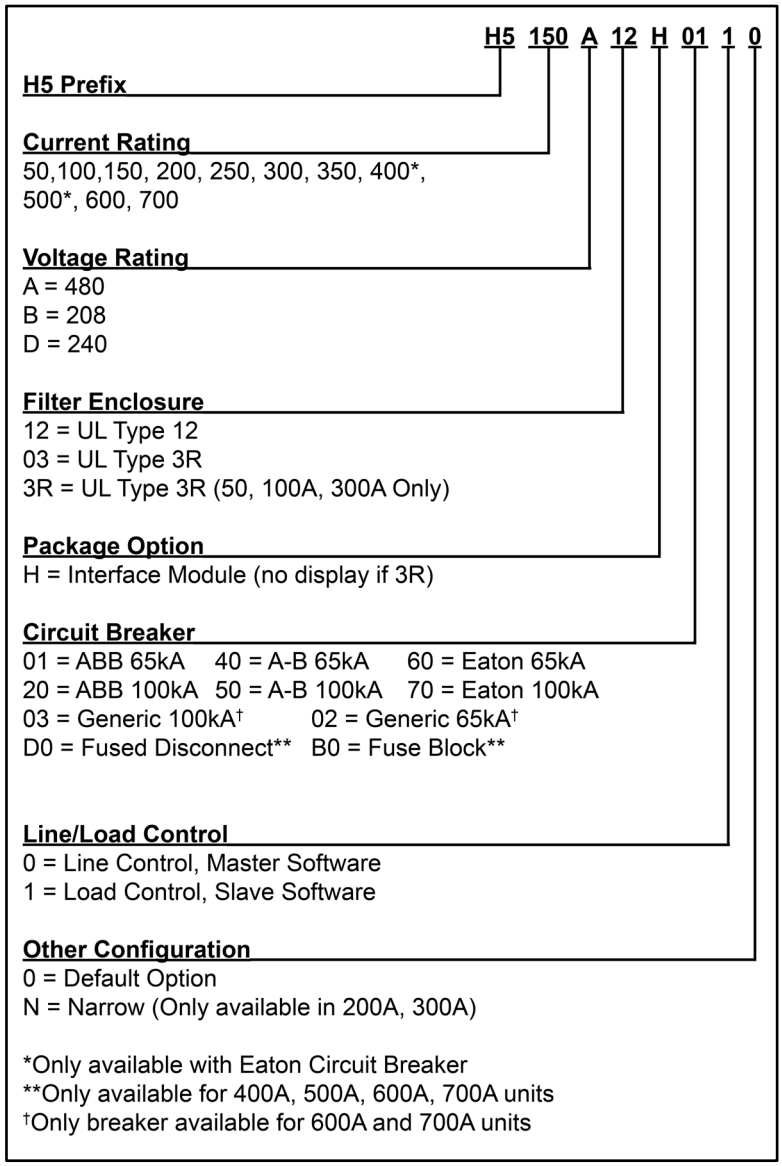

Figure 5: HarmonicGuard® Active Part Number Encoding

Note: *208 V and 240 V product versions are documented as 480 V in product description and data.*

HGA Part Numbering System – 600 V

Temperature: 40° C
Current: 39, 78, 110, 150, 185, 220, 370A
Voltage: 600
Enclosure: Open Chassis, UL Type 1 or UL Type 3R

Figure 6 identifies the significance of each character in the HarmonicGuard® Active filter part number. An example of a completed part number would be H5039C033H0110. This designates an enclosed HarmonicGuard® Active filter that is rated for 39 amps, 600 Volts, and has an HMI Interface Module Package.

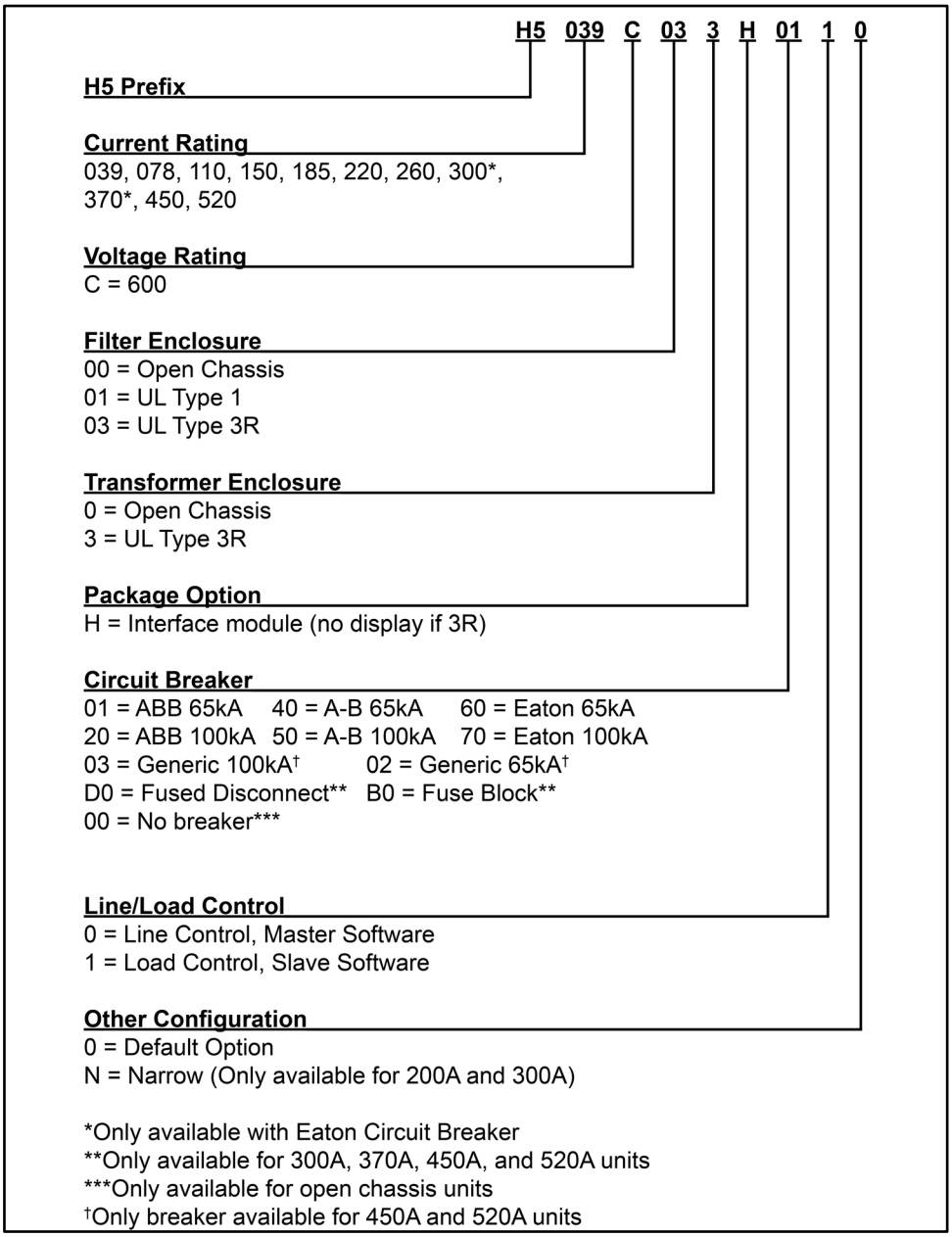

Figure 6: HarmonicGuard® Active Part Number Encoding

Communications Part Numbering

Figure 6 below shows the Communications Module part numbering system. The base/standard communications unit is the CMXXXX00, which has the HMI with a Modbus RTU over RS485 network interface. The CMXXXX01 (EtherNet/IP and Modbus TCP) and the CMXXXX02 (DeviceNet) options also include the HMI but supports an alternate network interface instead of Modbus RTU.

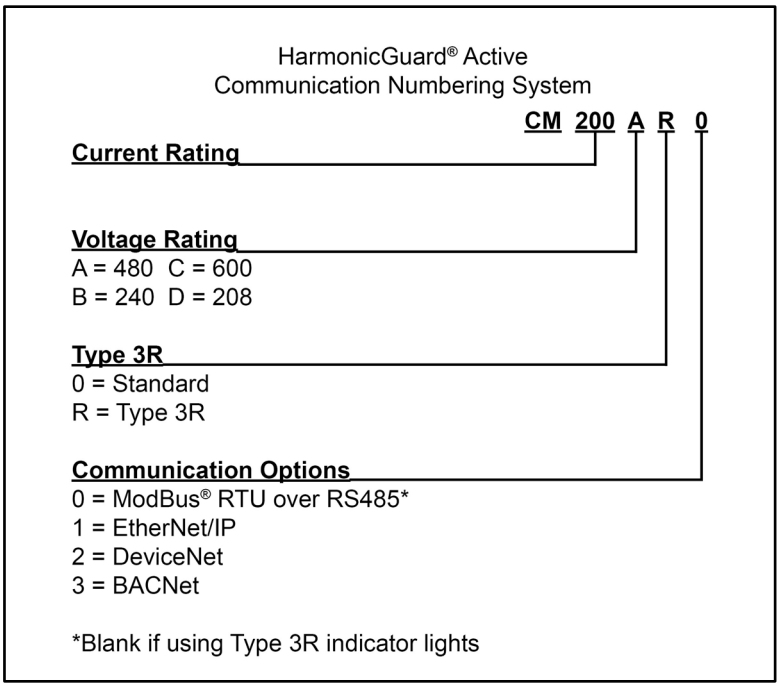

Figure 7: Communcation Part Number Encoding

Floor Stand Options

Table 2 below shows the Floor Stand options. The floor stand is currently only available for use with Type 1 enclosures.

Note: *400A filters and above come with a floor stand.*

Table 2: Floor Stand Options

Voltage	Floor Stand Part Number	Frame	Amp Rating
480 V	HGAF01D1A	D1	50A & 100A
480 V	HGAF01E1	E1	150A
480 V	HGAF01F1	F1	200A & 250A
480 V	HGAF01E2	E2	300A
480 V	HGAF01G1	G1	300 Narrow/350
600 V	HGAF01D1A	D1	39A & 78A
600 V	HGAF01E1	E1	110A
600 V	HGAF01F1	F1	150A & 185A
600 V	HGAF01E2	E2	220A
600 V	HGAF01G1	G1	220 Narrow/260

Note: *208 V and 240 V product versions are documented as 480 V in product description and data.*

Mounting an Open Chassis Unit

Open chassis models shall be mounted in an enclosure considered representative of the intended use. If you are mounting an open chassis unit in your own enclosure, you must provide an enclosure that is adequately sized and ventilated sufficiently to prevent overheating. Refer to **transcoil.com** for dimensions and heat loss that is dissipated by the HGA. The maximum

ambient temperature should not exceed 40°C (104°F). The 45 and 90 amp open chassis units have an ambient surrounding air temperature of 50ºC (122ºF).

Open chassis unit cooling notes

- Locate air outlet in the top of enclosure or in the upper 5% of the sides, with the required vent open area specified in the cooling drawing.
- Air inlet should be in the bottom of enclosure or in the lower 5% of the sides, with the required vent open area specified in the cooling drawing.
- Minimum air flow per fan is specified in the cooling drawing.
- Depending on the efficiency of the bottom ventilation, the fans mounted on the bottom of the unit may not be necessary.
- Maximum side wall spacing is 2 inches.
- Chassis needs to be mounted vertically.
- Chassis is rated for 40° C ambient temperature.
- Additional ventilation may be needed, depending on air vent and enclosure configuration.
- Covers should remain in place to guarantee proper cooling.
- Contact TCI to deviate from the specifications defined in the cooling diagrams.
- Dimensions in the cooling diagrams are approximate and in inches.

Cooling Diagrams

Please reference TCI's website for a list of cooling diagram drawings for the HGA open chassis units. They are available for download at https://transcoil.com/products/hga-5-active-harmonic-filter/hga-drawings/. Paper copies of the cooling diagrams are in the literature kit that is included with all open chassis units.

UL Type 3R Unit Heating and Cooling Notes

The UL Type 3R Enclosed Active Filter is equipped with heating and cooling provisions to meet minimum ambient temperature requirements. Equipped are thermostat-controlled cooling fans and an enclosure heater. Under normal operating conditions, the Enclosure Thermostat is to be set to 90°F and the Enclosure Heather is to be set to 40°F. In humid environments, the Enclosure Heater is to be set to 100°F or MAX, whichever is lesser.

Working Space

Provide enough access and working space around the unit to permit ready and safe installation, operation and maintenance. Make sure that the installation conforms to all working space and clearance requirements of the National Electrical Code (NEC) and/or any other applicable codes. Provide enough unobstructed space to allow cooling air to flow through the unit. Refer to the applicable installation drawing for clearances.

5.0 Installation Guidelines

Installation Checklist

The following are the key points to be followed for a successful installation. These points are explained, in detail, in the following sections of this manual.

- Make sure that the installation location will not be exposed to excessive vibration, corrosive or combustible airborne contaminants, excessive dirt, or liquids.
- Select a mounting area that will allow adequate cooling air flow and maintenance access.
- Make sure that all wiring conforms to the requirements of the National Electrical Code (NEC) and/or other applicable electrical codes.
- Connect the HGA filter equipment-grounding lug to the system ground of the premises wiring system. Use a properly sized grounding conductor.
- Connect 3-phase power to the input terminals of the HGA filter, L1, L2, & L3.
- Ensure that the CTs are properly installed and connected to the proper terminals inside the HGA filter (see CT Installation section of IOM Manual).
- Check everything thoroughly before applying power to the equipment.
- Check the panel and the inside of the enclosure for any foreign objects, dirt, or loose hardware.

Select a Suitable Location

Locating the HarmonicGuard® Active filter in a suitable environment will help ensure proper performance and a normal operating life. Refer to the environmental specifications listed in Table 1, marked on the unit's nameplate and/or noted on the drawings furnished with the unit.

Warning 	Unless specifically labeled as approved for such use, this equipment is not suitable for use in an explosive atmosphere or in a "Hazardous (Classified) Location" as defined in article 500 of the National Electrical Code (NEC).

UL Type 1 and open chassis units shall be installed in a pollution degree 2 environment (UL 508) where it will not be exposed to:

- Rain or dripping liquids
- Corrosive liquids or gasses
- Explosive or combustible gases or dust
- Excessive airborne dirt and dust
- Excessive vibration [0.152 mm (0.006 in.) displacement, 1G peak]

Please note that custom enclosure options may vary by available installation areas.

Mounting

The HGA must be mounted vertically on a smooth, solid surface, free from heat, dampness, and condensation. Refer to the applicable installation drawing for clearances.

Wiring

Cable Entry Locations

The enclosed HarmonicGuard® Active filters are not provided with enclosure wiring knockouts, however, a removable wire entry plate is provided. A selection can be made at the time of

installation. Typical or recommended cable entry locations are shown in the drawings shipped with the unit.

Circuit Breaker

For HGA units provided with an internal circuit breaker, see tables below for field wiring terminal wire size and tightening torque information. For circuit breaker selection recommendations on HGA units provided without a circuit breaker, please reference the Circuit Breaker Selection. The Circuit Breaker Selection contains tables of acceptable 65kAIC and 100kAIC circuit breakers from various manufacturers.

Field Wiring Connection Terminals

Compression type terminals are provided for all field wiring connections. The wire size (75° C copper) capacity ranges and tightening torque for the grounding and power terminals are listed in the tables that follow. Refer also to the drawings and other information shipped with the unit. A means to disconnect is the responsibility of the customer.

Table 3: 480 V - Power Terminal Wire Size Capacity Range and Tightening Torque for Active Filter Ground Lug

Filter Size		Ground Lugs		
480 V Units	**600 V Units**	**Wire Size***	**Torque In-Lbs. (Nm)**	**Wire Type**
45A to 100A	39A	6 AWG - 2/0	50 (5.7)	CU/AL
150A	110A	6 AWG - 2/0	50 (5.7)	CU/AL
200A	150A	6 AWG - 250 MCM	375 (42.4)	CU/AL
250A	185A	6 AWG - 250 MCM	375 (42.4)	CU/AL
300A	220A	3 AWG - 500 MCM	375 (42.4)	CU/AL
350A	260A	(2) 4 AWG - 600 MCM	500 (57)	CU/AL
400A	300A	(2) 4 AWG - 600 MCM	500 (57)	CU/AL
500A	370A	(2) 4 AWG - 600 MCM	500 (57)	CU/AL
600A	450A	(3) 2 AWG - 600 MCM	500 (57)	CU/AL
700A	520A	(3) 2 AWG - 600 MCM	500 (57)	CU/AL

***Note**: Wire size range listed is for lug as per lug manufacturer. Follow NEC guidelines for sizing ampacity of power conductors.*

Table 4: 480 V - Power Terminal Wire Size Capacity Range and Tightening Torque for Active Filter Models with Eaton Circuit Breakers

Filter Size		MFG	Breaker IC	CB Power Terminals		
480 V	**600 V**			**Wire Size***	**Torque In-Lbs. (Nm)**	**Wire Type**
45A to 50A	39A	Eaton Cutler Hammer	65/100 kA	6 - 3/0 AWG	50 (5.6)	CU/AL
90A to 100A	78A	Eaton Cutler Hammer	65/100 kA	6 - 3/0 AWG	50 (5.6)	CU/AL
150A	110A	Eaton Cutler Hammer	65/100 kA	8 - 350 MCM	177 (20)	CU/AL
200A	150A	Eaton Cutler Hammer	65/100 kA	8 - 350 MCM	177 (20)	CU/AL
250A	185A	Eaton Cutler Hammer	65/100 kA	3 AWG - 500 MCM	375 (42)	CU/AL
300A	220A	Eaton Cutler Hammer	65/100 kA	3 AWG - 500 MCM	375 (42)	CU/AL
350A	260A	Eaton Cutler Hammer	65/100 kA	(2) 2 AWG - 500 MCM	375 (42)	CU/AL
400A	300A	Eaton Cutler Hammer	65/100 kA	(2) 2 AWG - 500 MCM	375 (42)	CU/AL
500A	370A	Eaton Cutler Hammer	65/100 kA	(2) 2 AWG - 500 MCM	375 (42)	CU/AL

***Note**: Wire size range listed is for lug as per lug manufacturer. Follow NEC guidelines for sizing ampacity of power conductors.*

Table 5: 480 V - Power Terminal Wire Size Capacity Range and Tightening Torque for Active Filter Models with Rockwell Allen Bradley Circuit Breakers

Filter Size		MFG	Breaker IC	CB Power Terminals		
480 V	**600 V**			**Wire Size***	**Torque In-Lbs. (Nm)**	**Wire Type**
45A to 50A	39A	Allen Bradley	65/100 kA	14 - 1/0 AWG	62 (7)	CU Only
90A to 100A	78A	Rockwell Allen Bradley	65/100 kA	14 - 1/0 AWG	62 (7)	CU Only
150A	N/A	Rockwell Allen Bradley	65/100 kA	4 AWG - 300 MCM	200 (23)	CU/AL
200A	150A	Rockwell Allen Bradley	65/100 kA	4 AWG - 300 MCM	200 (23)	CU/AL
250A	185A	Rockwell Allen Bradley	65/100 kA	(2) 2/0 - 250 MCM	274 (31)	CU/AL
300A	220A	Rockwell Allen Bradley	65/100 kA	(2) 2/0 - 250 MCM	274 (31)	CU/AL
350A	260A	Rockwell Allen Bradley	65/100 kA	(2) 2/0 - 250 MCM	274 (31)	CU/AL
400A	300A	Rockwell Allen Bradley	65/100 kA	N/A	N/A	N/A
500A	370A	Rockwell Allen Bradley	65/100 kA	N/A	N/A	N/A

**Note*: Wire size range listed is for lug as per lug manufacturer. Follow NEC guidelines for sizing ampacity of power conductors.*

Table 6: Power Terminal Wire Size Capacity Range and Tightening Torque for Active Filter Models with ABB Circuit Breakers

Filter Size		MFG	Breaker IC	CB Power Terminals		
480 V	**600 V**			**Wire Size***	**Torque In-Lbs. (Nm)**	**Wire Type**
45A to 50A	39A	ABB	65/100 kA	14 - 1/0 AWG	50.4 (5.7)	CU/AL
90A to 100A	78A	ABB	65/100 kA	14 - 1/0 AWG	50.4 (5.7)	CU/AL
150A	N/A	ABB	65/100 kA	4 AWG - 300 MCM	200 (22.6)	CU/AL
200A	150A	ABB	65/100 kA	4 AWG - 300 MCM	200 (22.6)	CU/AL
250A	185A	ABB	65/100 kA	(2) 3/0 - 250 MCM	274 (31)	CU/AL
300A	220A	ABB	65/100 kA	(2) 3/0 - 250 MCM	274 (31)	CU/AL
350A	260A	ABB	65/100 kA	(2) 3/0 - 500 MCM	274 (31)	CU/AL
400A	300A	ABB	65/100 kA	N/A	N/A	N/A
500A	370A	ABB	65/100 kA	N/A	N/A	N/A

***Note*: Wire size range listed is for lug as per lug manufacturer. Follow NEC guidelines for sizing ampacity of power conductors.*

Table 7: Power Terminal Wire Size Capacity Range and Tightening Torque for Active Filter Models with LSIS Circuit Breakers

Filter Size		MFG	Breaker IC	CB Power Terminals		
480 V	**600 V**			**Wire Size***	**Torque In-Lbs. (Nm)**	**Wire Type**
300A	220A	LSIS	65/100 kA	1/0 - 750 MCM	477 (54)	CU/AL
350A	260A	LSIS	65/100 kA	1/0 - 750 MCM	477 (54)	CU/AL
600A	450A	LSIS	65/100 kA	(3) 3/0 - 400 MCM	398 (45)	CU/AL
700A	520A	LSIS	65/100 kA	(3) 3/0 - 400 MCM	398 (45)	CU/AL

***Note*: Wire size range listed is for lug as per lug manufacturer. Follow NEC guidelines for sizing ampacity of power conductors.*

Table 8: Power Terminal Wire Size Capacity Range and Tightening Torque for 600 V Active Filter Models with 480V/600V K-Rated AutoTransformer

Filter Size	Primary Power Terminals		Secondary Power Terminals		Ground Lug		
600 V	**Wire Size***	**Torque In-Lbs. (Nm)**	**Wire Size***	**Torque In-Lbs. (Nm)**	**Wire Size**	**Torque In-Lbs. (Nm)**	**Wire Type**
39A to 78A	14 - 2/0 AWG	84 (9.5)	14 - 2 AWG	84 (9.5)	14 - 2 AWG	84 (9.5)	CU/AL
110A to 150A	300 MCM	240 (27)	6 AWG - 300 MCM	240 (27)	14 - 2 AWG	84 (9.5)	CU/AL
185A to 220A	600 MCM	360 (41)	600 MCM	360 (41)	14 - 2 AWG	84 (9.5)	CU/AL
370A	PADS	240 (27)	PADS	240 (27)	14 - 2 AWG	84 (9.5)	CU/AL

***Note*: Wire size range listed is for lug as per lug manufacturer. Follow NEC guidelines for sizing ampacity of power conductors.*

Table 9: Power Terminal Wire Size Capacity Range and Tightening Torque for Open Chassis Active Filter Models with Power Terminal Block (without Circuit Breaker)

Filter Size	Power Terminal Block		
480 V	**Wire Size***	**Torque In-Lbs. (Nm)**	**Wire Type**
45A to 100A	14 - 2/0 AWG	120 (13.6)	CU/AL
150A	3/0 - 350 MCM	274 (31)	CU/AL
200A	500 MCM	375 (42.4)	CU/AL
250A	500 MCM	375 (42.4)	CU/AL
300A	(2) 6 AWG – 250 MCM	275 (31.1)	CU/AL
350A	(2) 6 AWG – 250 MCM	275 (31.1)	CU/AL
400A	(2) 4 AWG – 500 MCM	450 (51)	CU/AL
500A	(2) 4 AWG – 500 MCM	450 (51)	CU/AL
600A	(4) 6 AWG – 350 MCM	275 (31.1)	CU/AL
700A	(4) 6 AWG – 350 MCM	275 (31.1)	CU/AL

**Note*: Wire size range listed is for lug as per lug manufacturer. Follow NEC guidelines for sizing ampacity of power conductors.*

Table 10: Power Terminal Wire Size Capacity Range and Tightening Torque for Active Filter models with Fused Disconnect Switches

Filter Size		CB Power Terminals		
480 V	**600 V**	**Wire Size***	**Torque In-Lbs. (Nm)**	**Wire Type**
300A	220A	(2) 6 AWG - 350 MCM	500 (57)	CU/AL
350A	260A	(2) 6 AWG - 350 MCM	500 (57)	CU/AL
400A	300A	(2) 2 AWG - 600 MCM	500 (57)	CU/AL
500A	370A	(2) 2 AWG - 600 MCM	500 (57)	CU/AL

**Note*: Wire size range listed is for lug as per lug manufacturer. Follow NEC guidelines for sizing ampacity of power conductors.*

Table 11: Power Terminal Wire Size Capacity Range and Tightening Torque for Active Filter Models with Non-Fused Disconnect Switches

Filter Size		Control Connections		
480 V	**600 V**	**Wire Size***	**Torque In-Lbs. (Nm)**	**Wire Type**
300A	220A	(2) 6 AWG - 350 MCM	500 (57)	CU/AL
350A	260A	(2) 6 AWG - 350 MCM	500 (57)	CU/AL
400A	300A	(2) 2 AWG - 600 MCM	500 (57)	CU/AL
500A	370A	(2) 2 AWG - 600 MCM	500 (57)	CU/AL

**Note*: Wire size range listed is for lug as per lug manufacturer. Follow NEC guidelines for sizing ampacity of power conductors.*

Table 12: Power Terminal Wire Size Capacity Range and Tightening Torque for Active Filter Models with Fuse Block

Filter Size		CB Power Terminals		
480 V	**600 V**	**Wire Size***	**Torque In-Lbs. (Nm)**	**Wire Type**
200A	150A	4 AWG - 500 MCM	450 (51)	CU/AL
250A	185A	4 AWG - 500 MCM	450 (51)	CU/AL
300A	220A	(2) 4 AWG - 500 MCM	450 (51)	CU/AL
350A	250A	(2) 4 AWG - 500 MCM	450 (51)	CU/AL
400A	300A	(2) 4 AWG - 500 MCM	450 (51)	CU/AL
500A	370A	(2) 4 AWG - 500 MCM	450 (51)	CU/AL

**Note*: Wire size range listed is for lug as per lug manufacturer. Follow NEC guidelines for sizing ampacity of power conductors.*

Table 13: Control Terminal Wire Size Capacity Range and Tightening Torque for all Active Filter models

Filter Size		Control Connections		
480 V	**600 V**	**Wire Size***	**Torque In-Lbs. (Nm)**	**Wire Type**
45A to 100A	39A to 78A	28 to 14 AWG	4.4 in.-lbs. (0.5 Nm)	CU/AL

**Note*: Wire size range listed is for lug as per lug manufacturer. Follow NEC guidelines for sizing ampacity of power conductors.*

Caution	Use copper wire that is appropriate for the Voltage and current rating of the equipment. The wire selection must conform to the requirements of the National Electrical Code (NEC) and/or other applicable electrical codes. Use wire with an insulation temperature rating of 75°C or higher.

Connection Diagram

The figure below shows the typical wiring connections between the models of the HGA and the load. Refer to the drawings furnished with the unit for more specific information.

Connection diagrams in this section are representative. For the latest connection diagram, please see the TCI website for the 25027-1 208-480 V connection diagram, the 28425 600 V connection diagram, and the HMI and network connection diagram 28283-1.

- The input 3-phase AC Voltage source must be connected in a positive ABC phase rotation from
  L1-L2-L3 for correct unit operation.

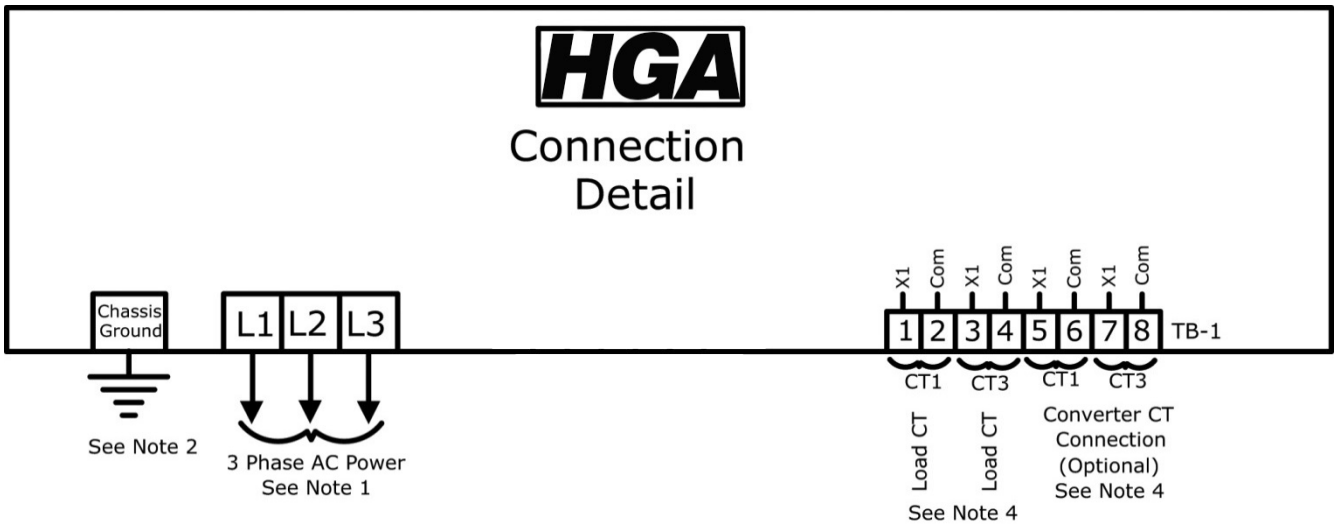

Figure 8: Load Connection Diagram

Notes:

1. Wiring should be 75° C or higher insulated copper, with the appropriate Voltage and current rating.
2. Chassis ground must be connected to the ground of the premises wiring system, in accordance with NEC and local codes. Connection must be made using a wire conductor.
3. Terminal TB-I & J25 wire range is 30-12 AWG, tightening torque is 4.4 IN-LB (0.5 NM).
4. Operating current transformers with the secondary winding open can result in a high Voltage across the secondary terminals, which may be dangerous to personnel or equipment.

Current Transformer Installation

For accurate sensing of the load, it is important that the load sensing current transformers are properly installed.

Warning 	All electrical installation and maintenance work on the HGA should be carried out by qualified electricians only. Failure to follow standard safety procedures may result in death or serious injury. Do not attempt any work on a powered HGA. Disconnect all sources of power to the HGA and any connected equipment before working on the equipment. Check for zero Voltage between all phases of the input and output lines. **Operating current transformers with the secondary winding open can result in a high Voltage across the secondary terminals, which may be dangerous to personnel or equipment.**

It is necessary for the HGA to monitor the current in Phase “A” (L1) and Phase “C” (L3). Stand-alone HGA filters are designed for Line Side current transformer (CT) placement as shown in Figure 8. It is important that both CTs are on the same side of the HGA. The CTs should be centered around the conductor. Optional Load Side CT placement is available for single units as shown in Figure 9.

The polarity of the CT is important; the “H1” marking on the CT must face the source. The secondary windings of the CT around conductor L1 should connect to TB-1 terminals 1 & 2 and the CT around conductor L3 should connect to TB-1 terminals 3 & 4. The secondary wire of the CT identified as “X1” must connect to the “X1” terminal of TB-1 for both CTs. Failure to maintain the correct polarity and phasing will cause an over-current fault. If this should happen, refer to the troubleshooting section.

***Note**: Units with black “TB-1” terminal blocks are shipped with two position shorting jumpers installed between positions 1 & 2 and 3 & 4. This is done for safety and to prevent equipment damage. The jumpers are installed in the center of the block and can be identified by the gray top. After the load CTs are installed and wired, these jumpers must be removed for correct unit operation. They can be removed with a standard flat blade screwdriver.*

***Note:** CT operation can be verified via the HMI touchscreen feedback waveform plot screens. Reference the HMI VLine & ILine Waveform Plot Sub Screen for details.*

Table 14: CT Range by Model Size

Amps	Voltage	CT Min Ratio	CT Max Ratio	Notes
Up to 100	Up to 600 V	250:5	3000:5	***Factory technician start up required to use CTs outside of the published range***
150	480 V	300:5	4000:5	
150	600 V	800:5	3000:5	
185	600 V	600:5	5000:5	
200	480 V	600:5	5000:5	
220	600 V	1000:5	4000:5	
250	480 V	600:5	5000:5	
300	480 V	800:5	6000:5	
300 (2x150)	480 V	1000:5	4000:5	
300 (3x100)	480 V	800:5	5000:5	
350	480 V	800:5	6000:5	
370	600 V	1800:5	6000:5	
400	480 V	1800:5	6000:5	
500	480 V	1800:5	6000:5	
600	480 V	1200:5	6000:5	
700	480 V	1200:5	6000:5	

Current Transformer Placement

The exact CT placement is dependent on the HGA’s configuration and size. Please refer to the following current transformer diagrams for the installation that applies to your configuration.

The HGA is factory configured for Line Applied/Master OR Load Applied/Slave operation. A line side unit wired with load side CT feedback or a load side unit wired for line side feedback will not operate correctly.

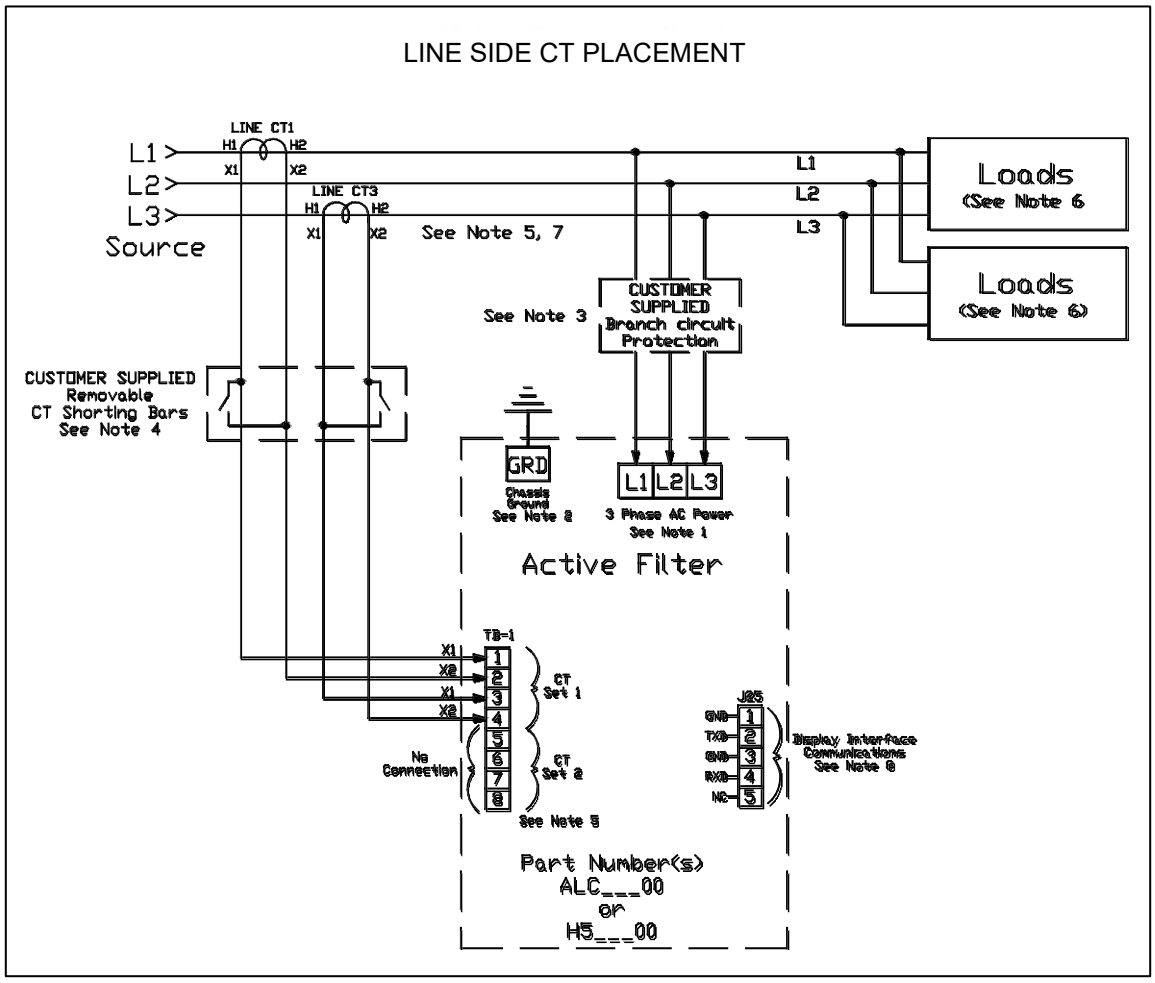

Figure 9: HGA 480 V Single Unit Line Side / Bus Applied Connection Diagram

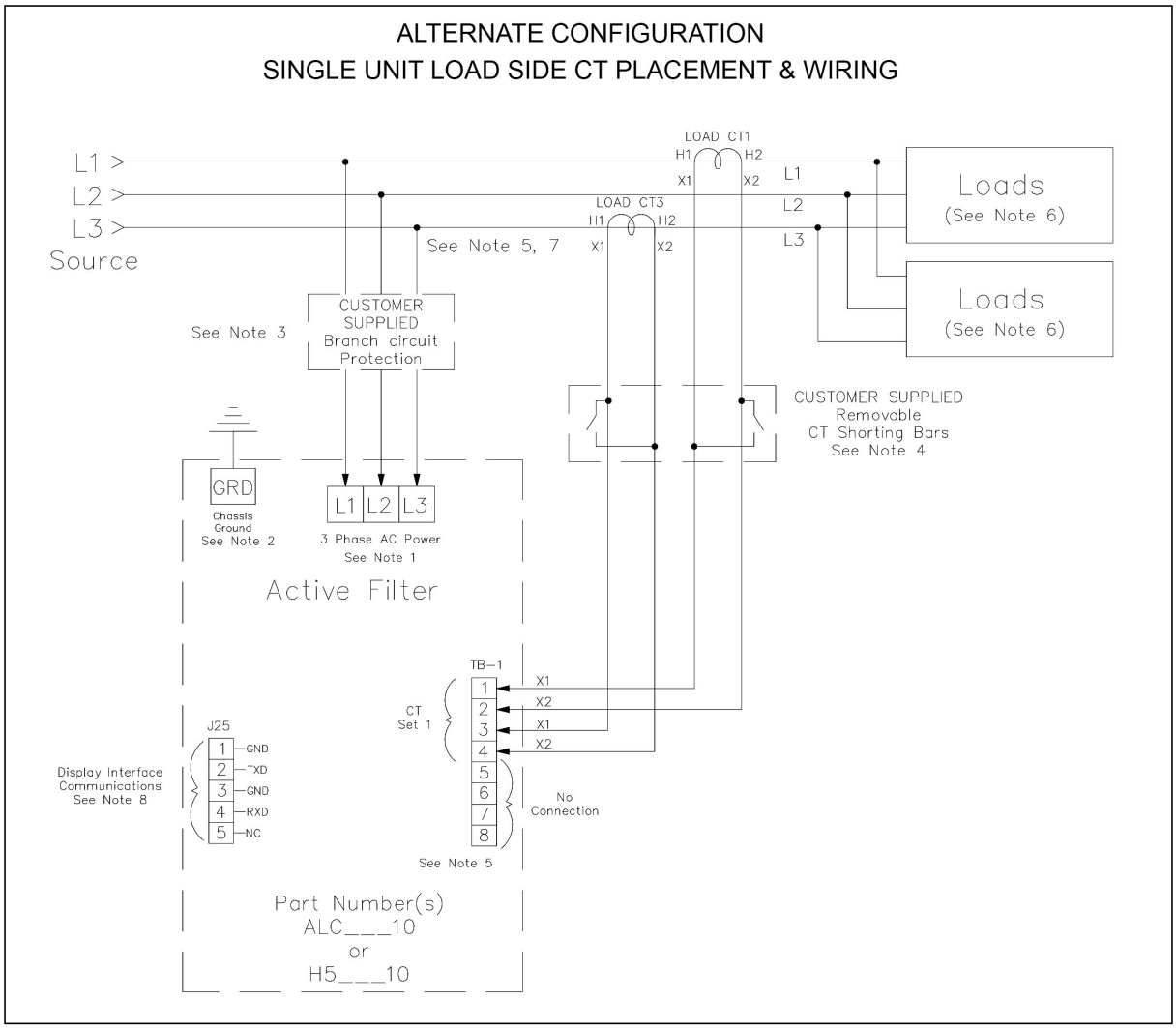

Figure 10: HGA 480 V Single Unit Load Side / Drive Applied Connection Diagram

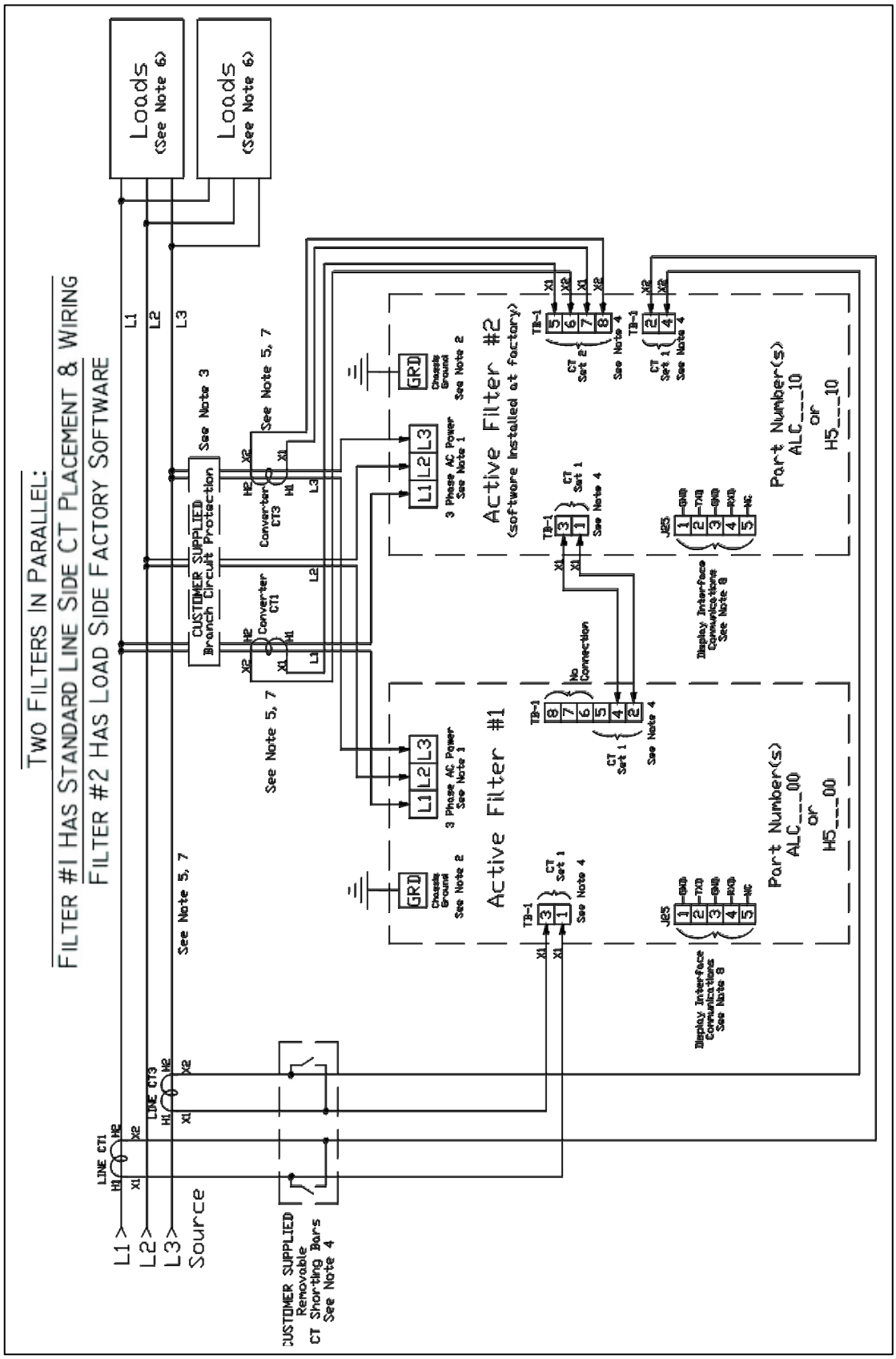

Figure 11: HGA 480 V Two Unit Parallel Connection Diagram

CT Wire Recommendations

If you want to extend your CT leads, there are four basic options:

- Twisted - Our standard CT leads are twisted. Twisting is important for noise immunity, especially at 50-60 Hz.
- Shielded and twisted - Adding a shield—in addition to the twisting—can offer some additional noise immunity, especially for long extensions. Note: for best immunity to crosstalk, the wires should be twisted in pairs.
- Non-shielded and non-twisted - Most cables are twisted, so this normally only arises if you use two single conductors. We recommend against this for most applications, because there is very little noise immunity. This can work if the conductors for each CT are kept in close contact to minimize loop area and if the CT conductors are kept away from line (mains) conductors and in their own conduit or metal raceway.
- Shielded but non-twisted - This is a bit unusual but does occur. There are two concerns with this type of cable. First, the shield primarily blocks high frequency interference, but not 60 Hz. 60 Hz is much better blocked by twisting the wires. 60 Hz interference is a big concern, because there is a lot of 60 Hz noise and it's the main frequency we are measuring. Second, because the wires are not twisted into pairs, there is a greater risk of crosstalk between CTs if you run more than one pair of CT wires in the same cable. If possible, use twisted pair cabling when extending CT wires.

Notes:

1. Wiring should be 75° C or higher insulated copper, with the appropriate Voltage and current rating.
2. Chassis ground must be connected to the ground of the premises wiring system, in accordance with NEC and local codes. Connection must be made using a wire conductor.
3. Customer is responsible for branch circuit protection.
4. Operating current transformers with the secondary winding open can result in a high Voltage across the secondary terminals, which may be dangerous to personnel or equipment.
5. Current transformers should be centered around conductor.
6. Load(s) have an integral 3% line reactance or equivalent DC bus choke to optimize Active Filter utilization, consult TCI for Active filter capacity with less than 3%.
7. Source CTs are customer installed and external to the active filter.
8. Available network interface depends on CM Module HMI option or enclosure type. Reference the HGA IOM or HMI Schematic / Connection Diagram 28283-1.

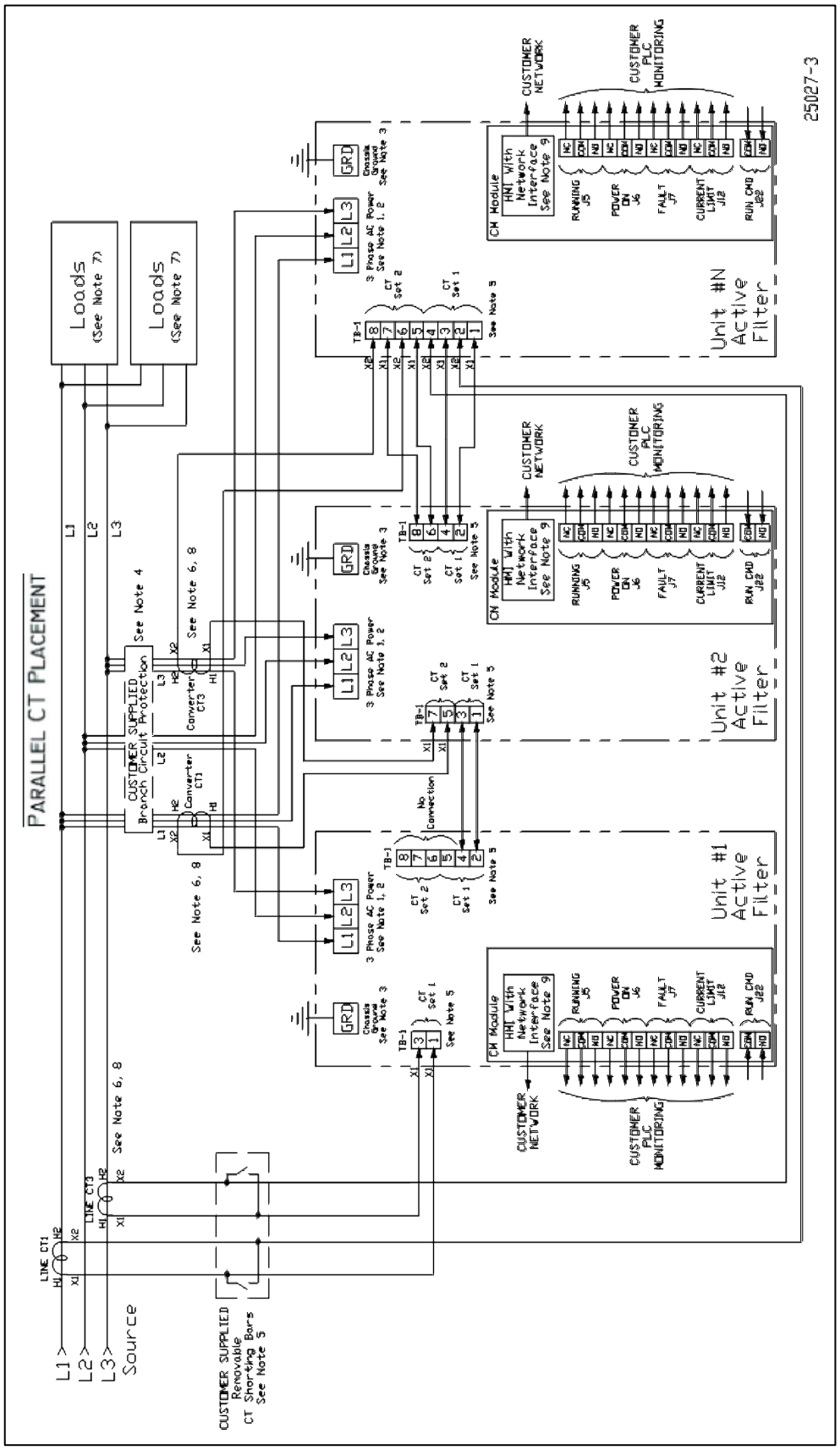

Figure 12: HGA 480 V Three Wide Parallel Unit Connection Diagram

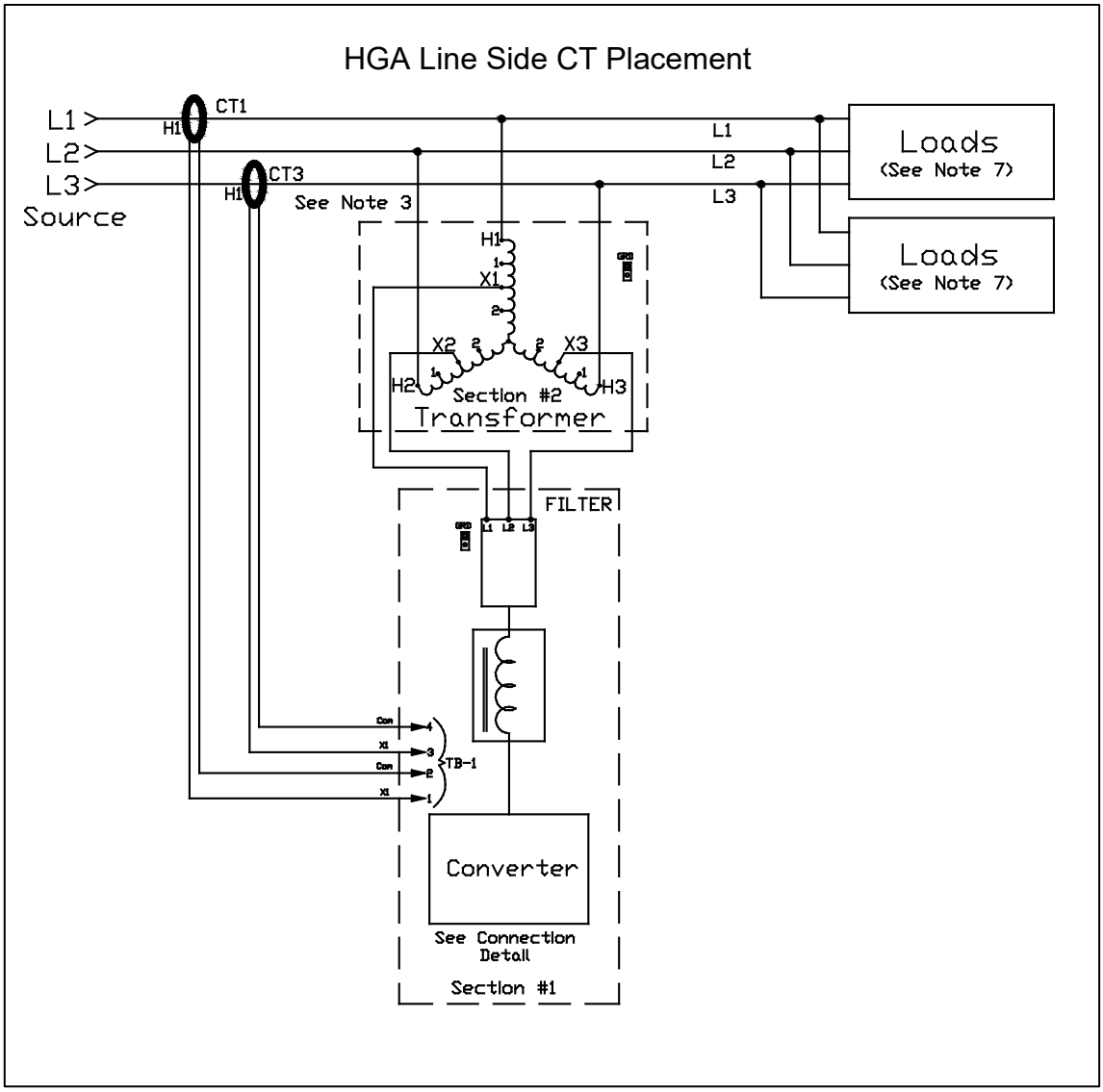

Figure 13: HGA 600 V Single Unit Line Side / Bus Applied Connection Diagram

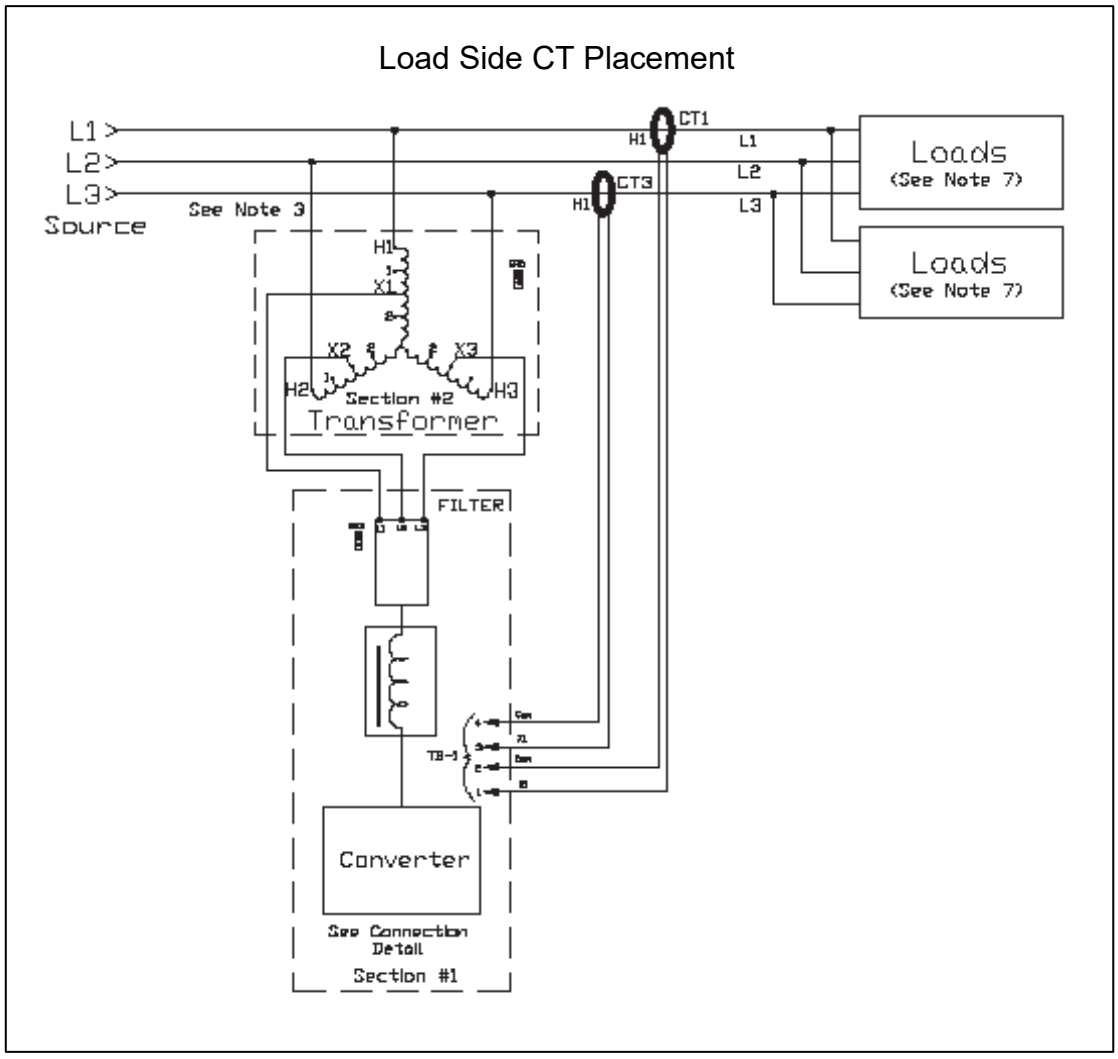

Figure 14: HGA 600 V Single Unit Load Side Applied Connection Diagram

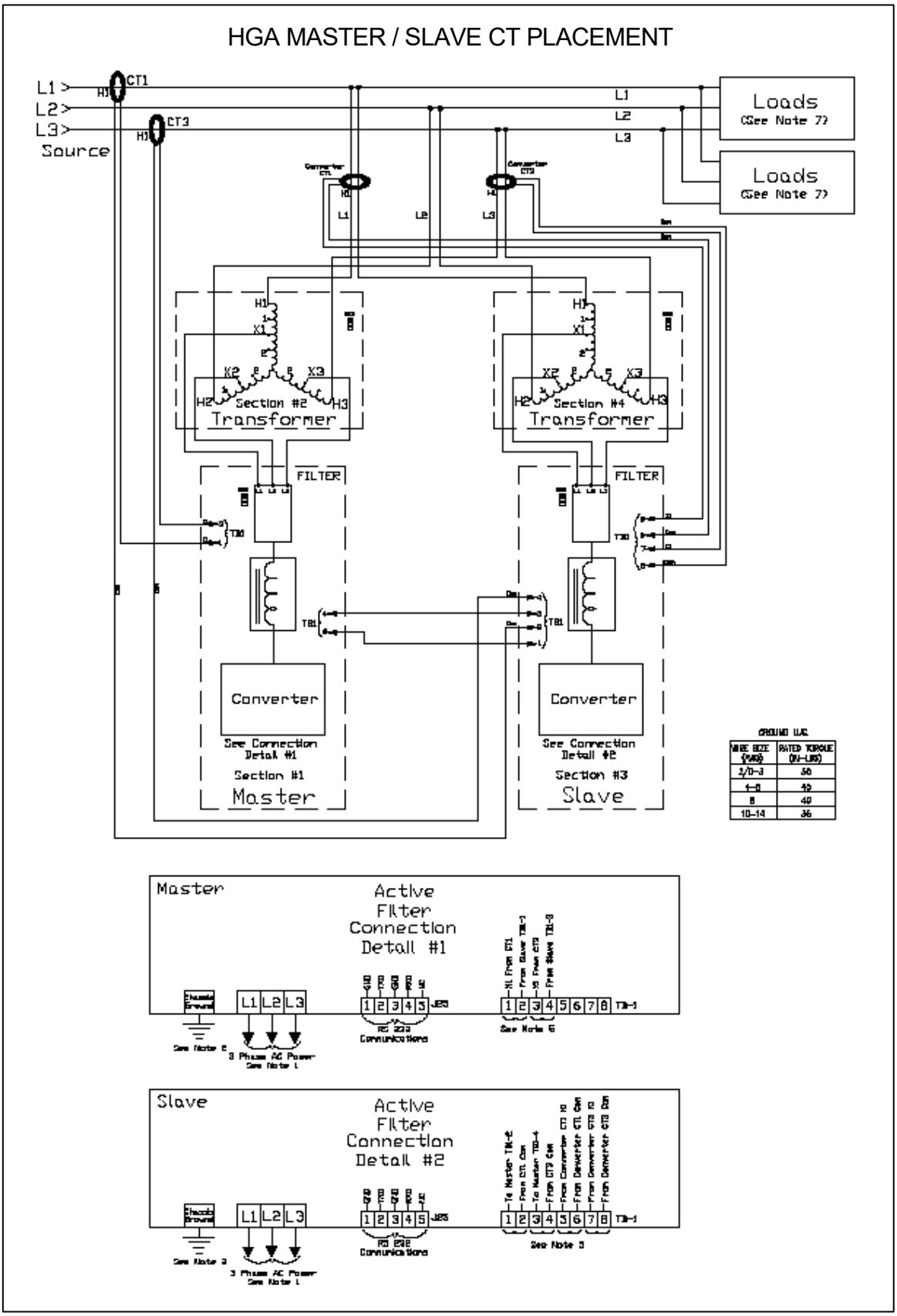

Figure 15: HGA 600 V Two Unit Parallel Connection Diagram

Notes:

1. Wiring should be 75° C or higher insulated copper, with the appropriate Voltage and current rating.
2. Chassis ground must be connected to the ground of the premises wiring system, in accordance with NEC and local codes. Connection must be made using a wire conductor.
3. Customer is responsible for branch circuit protection.
4. Terminal TB-1 and J25 wire range is 30-12 Awg, tightening torque is 4.4 in-lb. (.5 Nm).
5. Operating current transformers with the secondary winding open can result in a high Voltage across the secondary terminals, which may be dangerous to personnel or equipment.
6. Current transformers should be centered around conductor.
7. Load(s) have an integral 3% line reactance or equivalent DC bus choke.

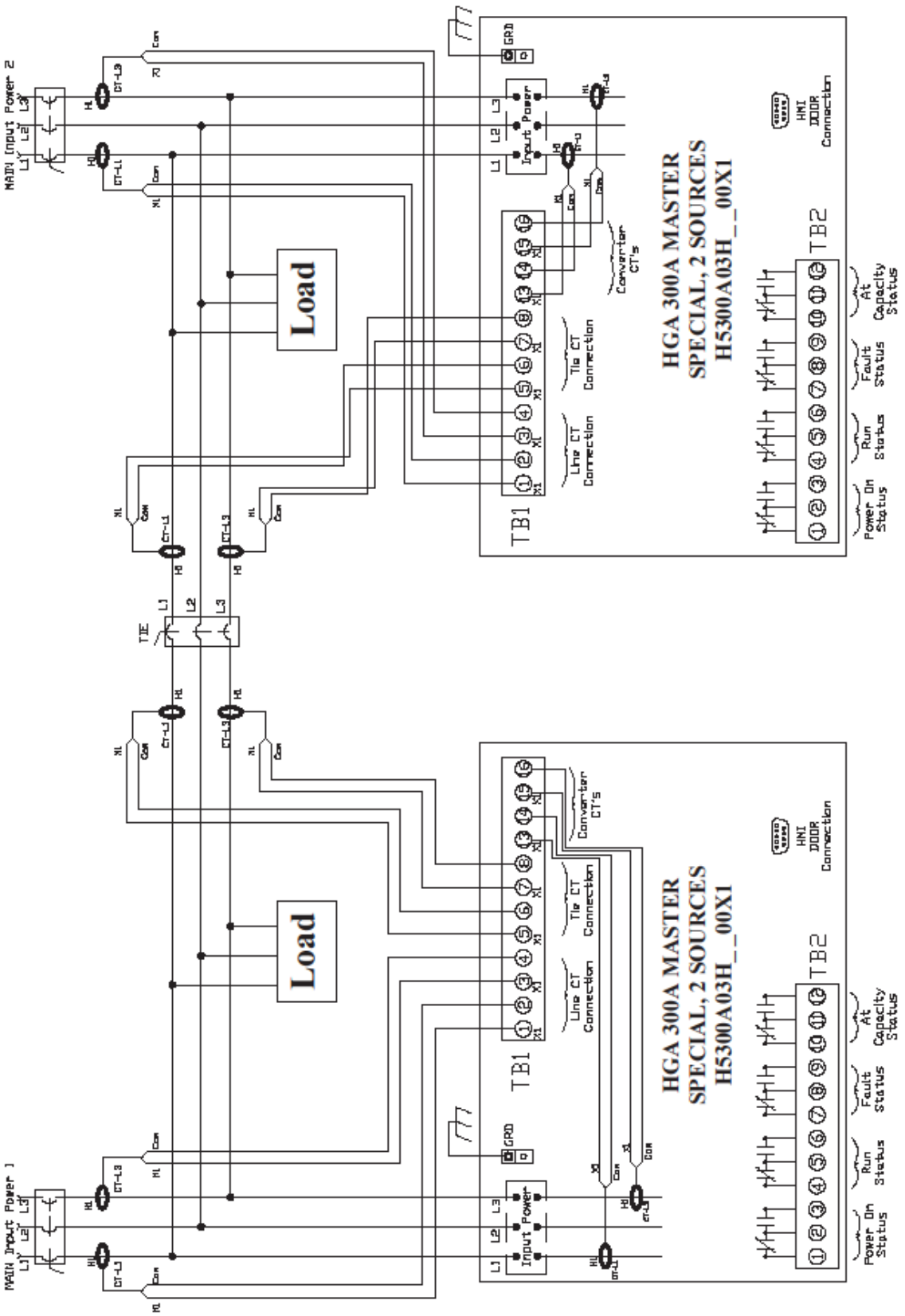

Figure 16: HGA 480 V Main-Tie-Main Connection Diagram

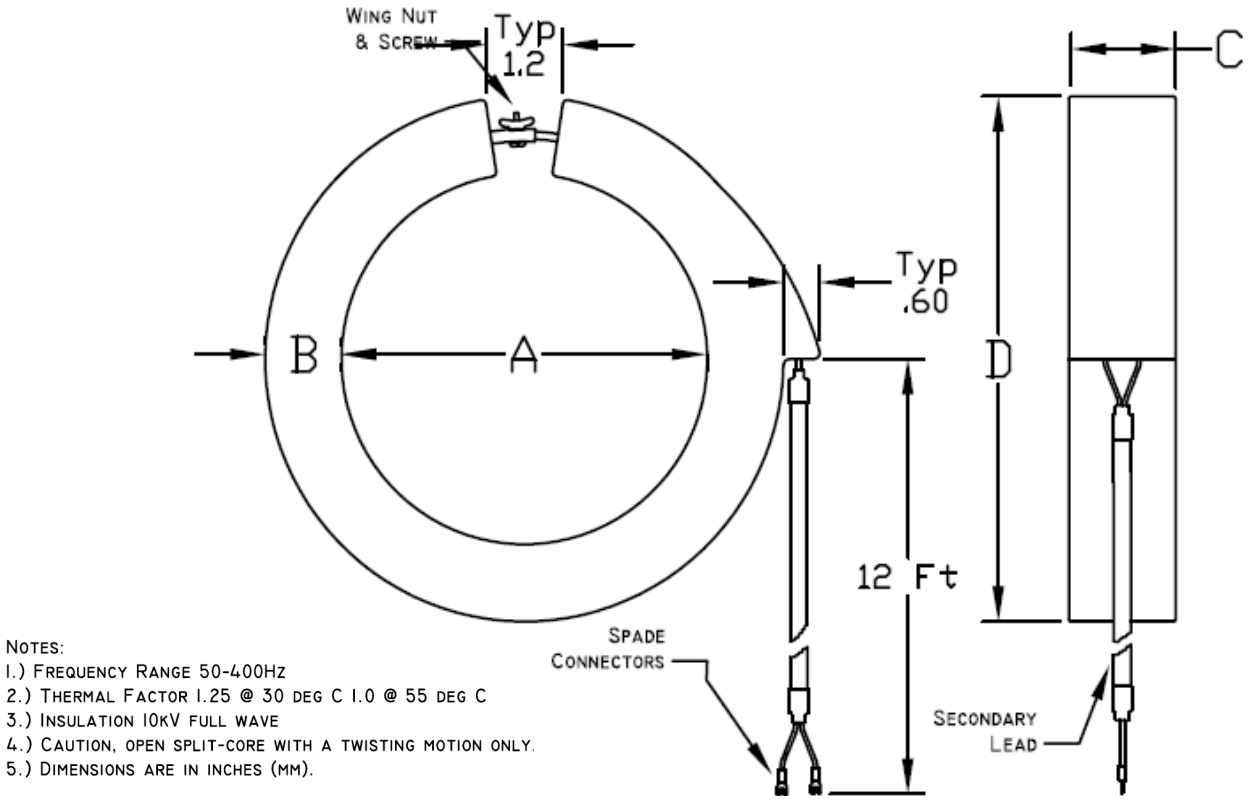

				Dimensions in Inches (mm)			
Catalog #	Current Ratio	VA Rating	Burden Value (Ohms)	A	B	C	D
KCTF0200B04	200:5	2.5	0.1	4 (101.6)	1 1/4 (31.8)	1 1/2 (38.1)	6 1/2 (165.1)
KCTF0400B04	400:5	2.5	0.1	4 (101.6)	1 1/4 (31.8)	1 1/2 (38.1)	6 1/2 (165.1)
KCTF0500B04	500:5	2.5	0.1	4 (101.6)	1 1/4 (31.8)	1 1/2 (38.1)	6 1/2 (165.1)
KCTF0500B06	500:5	2.5	0.1	6 (152.4)	1 1/4 (31.8)	1 1/2 (38.1)	8 1/2 (215.9)
KCTF0600B06	600:5	5.0	0.2	6 (152.4)	1 1/4 (31.8)	1 1/2 (38.1)	8 1/2 (215.9)
KCTF0600B04	600:5	5.0	0.2	4 (101.6)	1 1/4 (31.8)	1 1/2 (38.1)	6 1/2 (165.1)
KCTF0800B04	800:5	5.0	0.2	4 (101.6)	1 1/4 (31.8)	1 1/2 (38.1)	6 1/2 (165.1)
KCTF1000B04	1000:5	5.0	0.2	4 (101.6)	1 1/4 (31.8)	1 1/2 (38.1)	6 1/2 (165.1)
KCTF1000B06	1000:5	5.0	0.2	6 (152.4)	1 1/4 (31.8)	1 1/2 (38.1)	8 1/2 (215.9)
KCTF1200B04	1200:5	5.0	0.2	4 (101.6)	1 1/4 (31.8)	1 1/2 (38.1)	6 1/2 (165.1)
KCTF1500B04	1500:5	5.0	0.2	4 (101.6)	1 1/4 (31.8)	1 1/2 (38.1)	6 1/2 (165.1)
KCTF1600B04	1600:5	15	0.6	4 (101.6)	1 1/4 (31.8)	1 1/2 (38.1)	6 1/2 (165.1)
KCTF1600B06	1600:5	15	0.6	6 (152.4)	1 1/4 (31.8)	1 1/2 (38.1)	8 1/2 (215.9)
KCTF1600B08	1600:5	15	0.6	8 (203.2)	1 1/4 (31.8)	1 1/2 (38.1)	10.5 (266.7)
KCTF2000B04	2000:5	25	1.0	4 (101.6)	1 1/4 (31.8)	1 1/2 (38.1)	6 1/2 (165.1)
KCTF2000B06	2000:5	25	1.0	6 (152.4)	1 1/4 (31.8)	1 1/2 (38.1)	8 1/2 (215.9)
KCTF3000B06	3000:5	45	1.8	6 (152.4)	1 1/4 (31.8)	1 1/2 (38.1)	8 1/2 (215.9)
KCTF5000B08	5000:5	45	1.8	8 (203.2)	1 1/4 (31.8)	1 1/2 (38.1)	10 1/2 (266.7)
KCT3F1200B04	1200:5	5.0	0.2	4 (101.6)	1 1/4 (31.8)	1 1/2 (38.1)	6 1/2 (165.1)
KCT3F1500B04	1500:5	5.0	0.2	4 (101.6)	1 1/4 (31.8)	1 1/2 (38.1)	6 1/2 (165.1)
KCT3F1600B04	1600:5	15	0.6	4 (101.6)	1 1/4 (31.8)	1 1/2 (38.1)	6 1/2 (165.1)
KCT3F2000B06	2000:5	25	1.0	6 (152.4)	1 1/4 (31.8)	1 1/2 (38.1)	8 1/2 (215.9)
KCT3F2500B06	2500:5	35	1.4	6 (152.4)	1 1/4 (31.8)	1 1/2 (38.1)	8 1/2 (215.9)
KCT3F3000B06	3000:5	45	1.8	6 (152.4)	1 1/4 (31.8)	1 1/2 (38.1)	8 1/2 (215.9)
KCT3F1000B04	1000:5	5.0	0.2	4 (101.6)	1 1/4 (31.8)	1 1/2 (38.1)	6 1/2 (165.1)
KCTF3000B08	3000:5	45.0	1.8	8 (203.2)	1 1/4 (31.8)	1 1/2 (38.1)	10 1/2 (266.7)

Figure 17: Current Transformer Diagram – Round

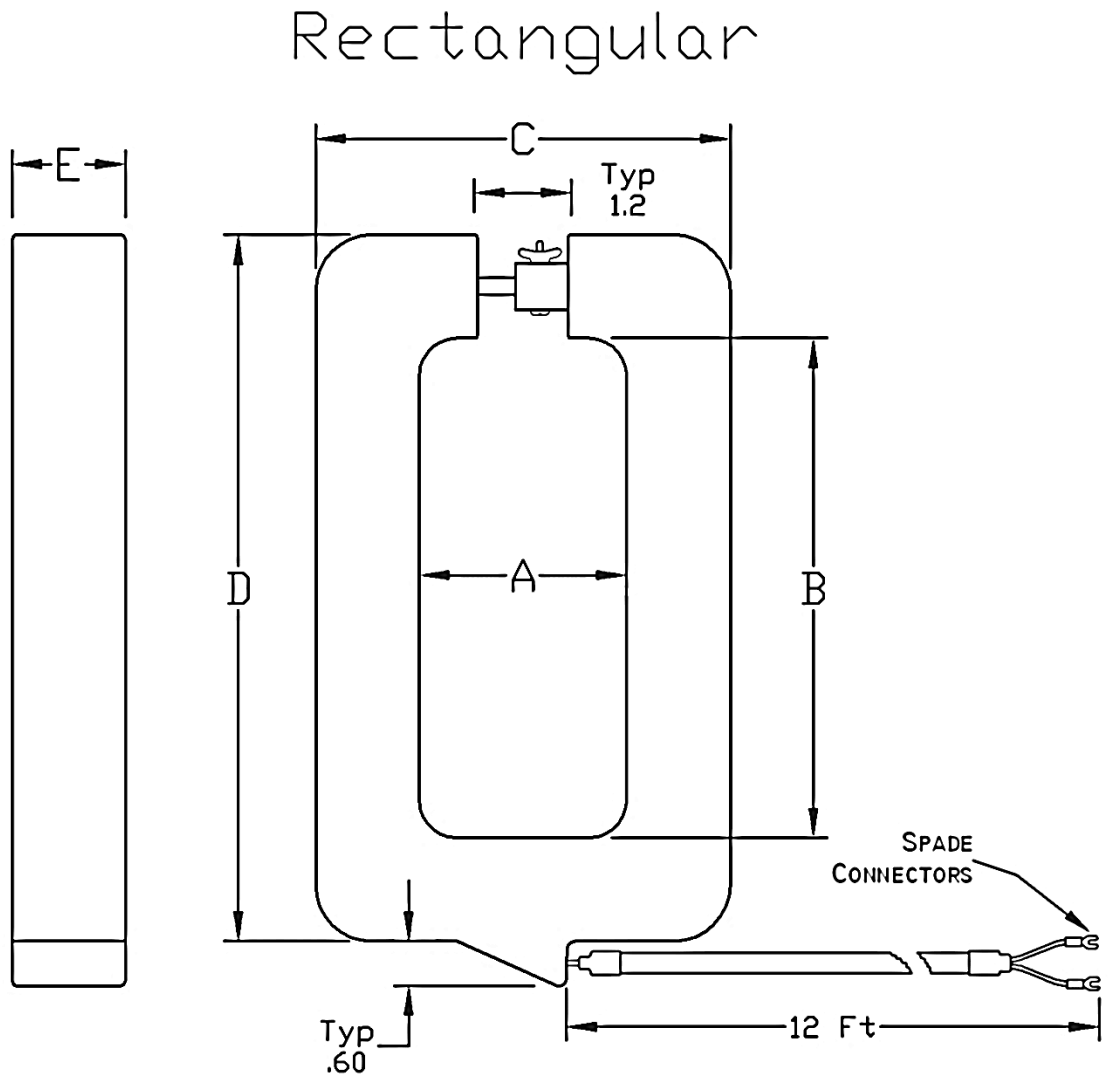

Catalog #	Current Ratio	VA Rating	Burden Value (Ohms)	A	B	C	D	E
KCTF0500A02	500:5	2.5	0.1	2 3/4 (69.9)	6 5/8 (168.3)	5 1/2 (139.7)	9 3/8 (238.1)	1 1/2 (38.1)
KCTF1000A02	1000:5	5.0	0.2	2 3/4 (69.9)	6 5/8 (168.3)	5 1/2 (139.7)	9 3/8 (238.1)	1 1/2 (38.1)
KCTF1200A02	1200:5	5.0	0.2	2 3/4 (69.9)	6 5/8 (168.3)	5 1/2 (139.7)	9 3/8 (238.1)	1 1/2 (38.1)
KCTF1600A02	1600:5	15	0.6	2 3/4 (69.9)	6 5/8 (168.3)	5 1/2 (139.7)	9 3/8 (238.1)	1 1/2 (38.1)
KCTF2000A02	2000:5	25	1.0	2 3/4 (69.9)	6 5/8 (168.3)	5 1/2 (139.7)	9 3/8 (238.1)	1 1/2 (38.1)
KCTF3000A02	3000:5	45	1.8	2 3/4 (69.9)	6 5/8 (168.3)	5 1/2 (139.7)	9 3/8 (238.1)	1 1/2 (38.1)
KCTF5000A04	5000:5	45	1.8	4 (101.6)	11 (279.4)	6 1/2 (165.1)	13 3/8 (339.7)	1 1/2 (38.1)

Figure 18: Current Transformer Diagram – Rectangular

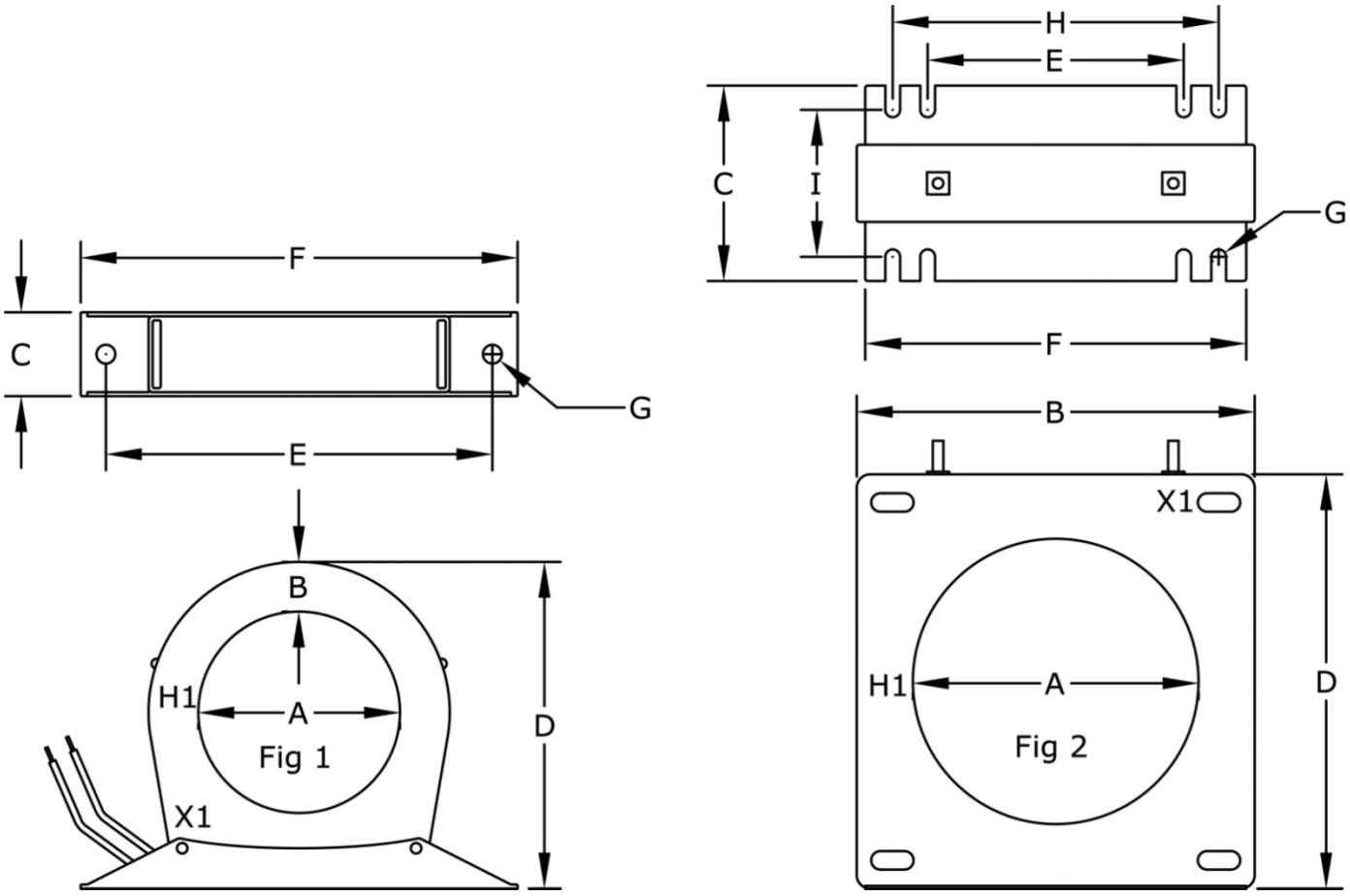

Catalog #	Current Ratio	VA Rating	Burden Value (Ohms)	A	B	C	D	E	F	G	H	I	Fig
KCTF0500B03	500:5	25.0	1.0	2 (50.8)	.99 (25.2)	1 1/4 (31.8)	4.7 (119.4)	5 3/4 (146.1)	6 1/2 (165.1)	0.28 (7.1)	N/A	N/A	1
KCTF0800B2.5	800:5	35.0	1.40	2 (50.8)	.99 (25.2)	1 1/4 (31.8)	4.7 (119.4)	5 3/4 (146.1)	6 1/2 (165.1)	0.28 (7.1)	N/A	N/A	1
KCTF1000B03	1000:5	13.8	0.55	3 (76.2)	0.74 (19.1)	1 1/4 (31.8)	4.7 (119.4)	5 3/4 (146.1)	6 1/2 (165.1)	0.28 (7.1)	N/A	N/A	1
KCTF1200B03	1200:5	10.0	0.40	3 (76.2)	0.74 (19.1)	1 1/4 (31.8)	4.7 (119.4)	5 3/4 (146.1)	6 1/2 (165.1)	0.28 (7.1)	N/A	N/A	1
KCTF1600C4.3	1600:5	15.0	1.00	4.3 (109.2)	5.9 (149.9)	2.9 (73.7)	6.2 (157.5)	3.8 (96.5)	5.7 (144.8)	0.22 (5.6)	4.9 (124.5)	2.2 (55.9)	2
KCTF2000B03	2000:5	13.8	0.55	3 (76.2)	0.74 (19.1)	1 1/4 (31.8)	4.7 (119.4)	5 3/4 (146.1)	6 1/2 (165.1)	0.28 (7.1)	N/A	N/A	1
KCTF2500C4.3	2500:5	20.0	0.80	4.3 (109.2)	5.9 (149.9)	2.9 (73.7)	6.2 (157.5)	3.8 (96.5)	5.7 (144.8)	0.22 (5.6)	4.9 (124.5)	2.2 (55.9)	2
KCTF0800C4.3	800:5	30.0	1.20	4.3 (109.2)	5.9 (149.9)	2.9 (73.7)	6.2 (157.5)	3.8 (96.5)	5.7 (144.8)	0.22 (5.6)	4.9 (124.5)	2.2 (55.9)	2
KCTF1000C4.3	1000:5	30.0	1.20	4.3 (109.2)	5.9 (149.9)	2.9 (73.7)	6.2 (157.5)	3.8 (96.5)	5.7 (144.8)	0.22 (5.6)	4.9 (124.5)	2.2 (55.9)	2
KCTF2000C4.3	2000:5	20.0	0.80	4.3 (109.2)	5.9 (149.9)	2.9 (73.7)	6.2 (157.5)	3.8 (96.5)	5.7 (144.8)	0.22 (5.6)	4.9 (124.5)	2.2 (55.9)	2

Figure 19: Current Transformer Diagram – Solid Core

Grounding

The HarmonicGuard® Active filter panel equipment-grounding lug must be connected to the ground of the premises wiring system. The equipment grounding connection must conform to the requirements of the National Electrical Code (NEC) and/or any other codes that apply to the installation site. The ground connection must be made using a wire conductor. Metallic conduit is not a suitable grounding conductor. The integrity of all ground connections should be periodically checked.

CM Module Serial Cable Connection for Open Chassis Units

The HGA units the communications module (CM) is a separate assembly for the main HGA active filter chassis. The CM module assembly contains the HMI touchscreen, communications interface PCB, and any optional network interface communications gateway included with the unit. For fully enclosed HGA units, the CM module is mounted to the enclosure door. On open chassis HGA units, the CM module needs to be mounted in the end user's enclosure, MCC section, or Electrical House panel.

The CM module should be connected to the HGA power converter prior to apply power to the unit. The serial cable that connects the CM module to the power converter is packed with the CM module prior to shipment. One end of the serial cable is plugged into the communications interface PCB on the CM module. The other end of the communications cable is plugged into one or more power converters on the main active filter chassis.

The CM module is packed as a loose part in the shipping materials of the active filter open chassis panel along with the serial cable used to connect the CM module to the power converter. See the figure below for the location of the J2 Chassis Communication Cable connection on the CM module.

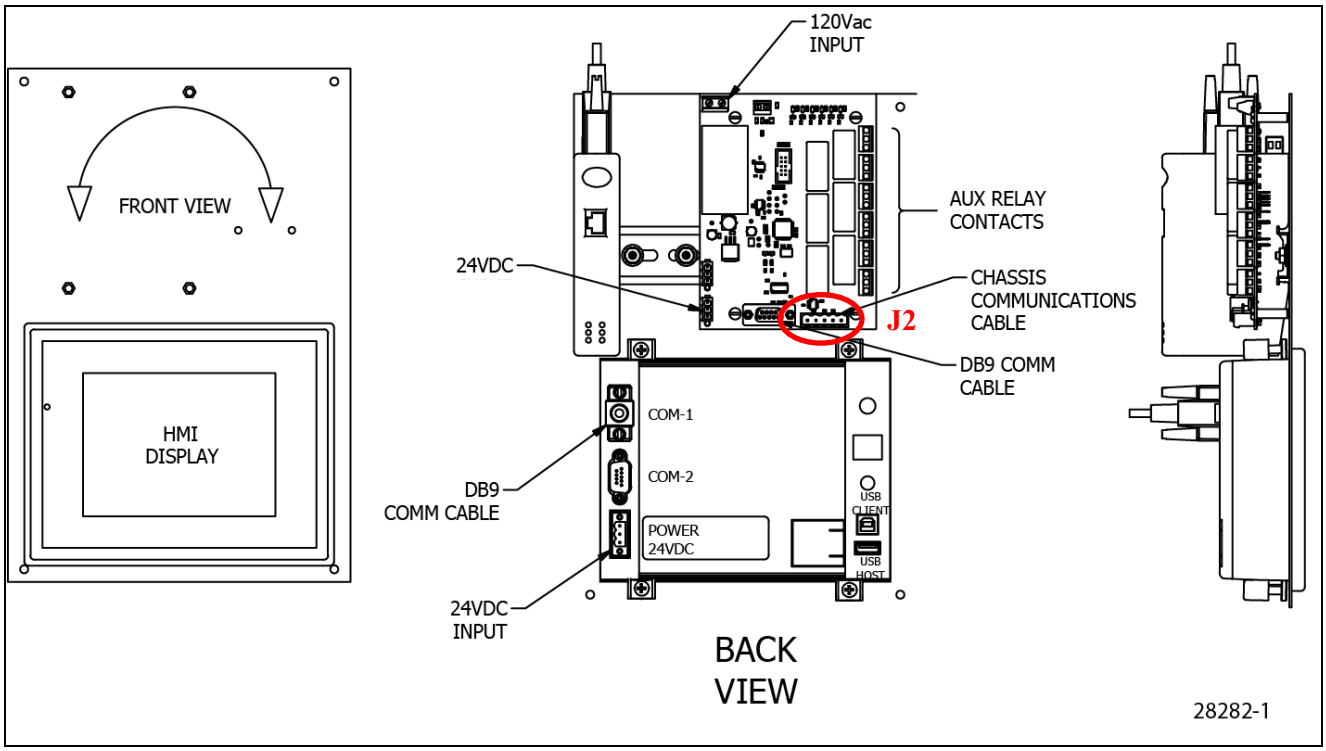

Figure 20: HGA CM Module with Chassis Communications Cable Serial Connector J2 Highlighted

Power Converter Serial Cable Connections

Note: *Do not connect the serial cable while the HGA unit is powered. Remove and lockout power prior to installing the serial cable.*

The power converter is located on the bottom half of the HGA panel. See the figure below for the location of the J25 connection on the power converter module. The J25 connection is below the power converter arch shield.

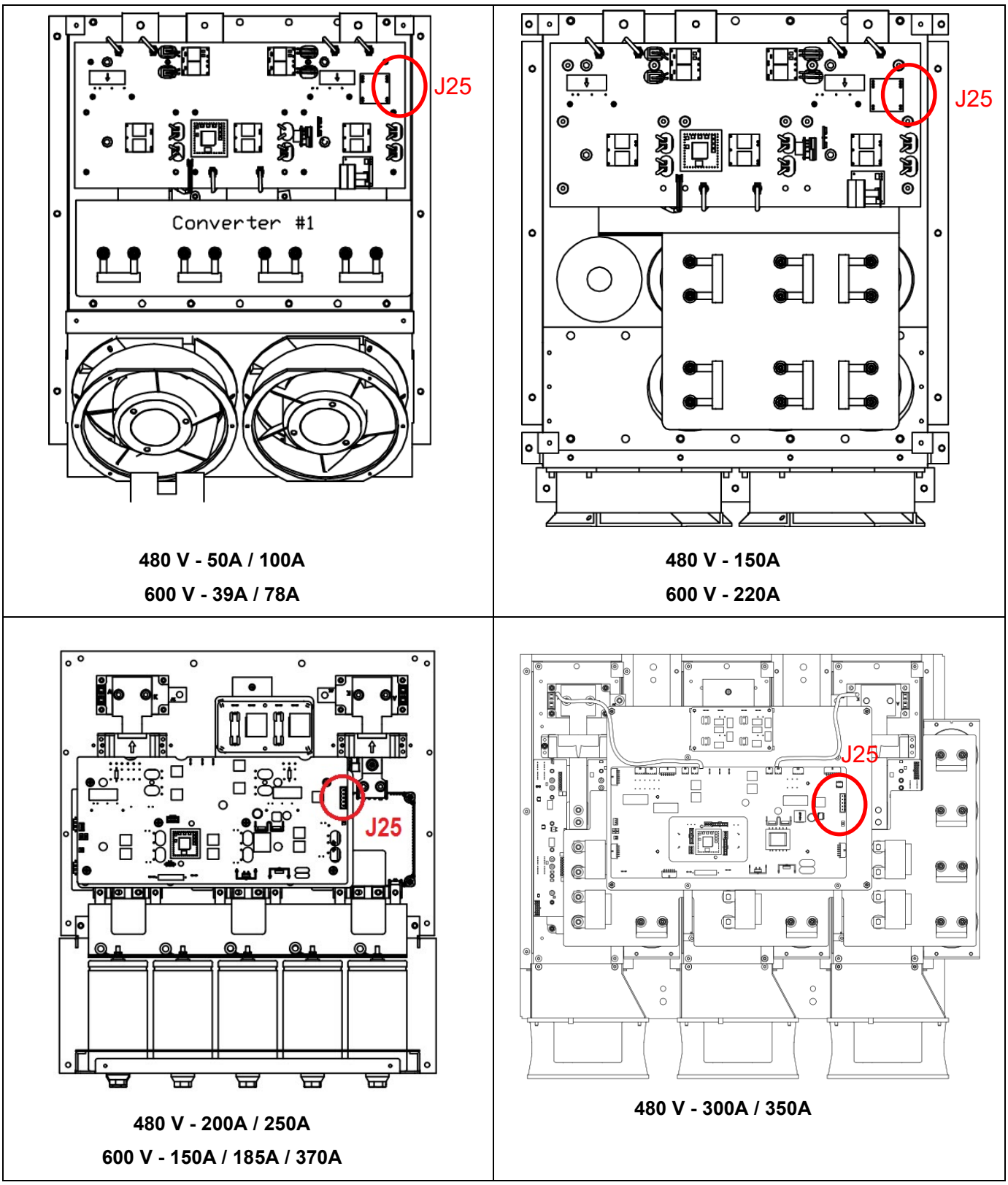

480 V - 50A / 100A

600 V - 39A / 78A

480 V - 150A

600 V - 220A

480 V - 200A / 250A

600 V - 150A / 185A / 370A

480 V - 300A / 350A

Figure 21: HGA Power Converter Module with Serial Connector J25 Highlighted in Red

Serial Cable Termination Setup

Note: *The serial cable termination configuration for the HGA units are setup during assembly and test of the unit. For new installations, the end user does not need to manually configure the serial cable termination DIP switches on the power converters. These instructions only need to be followed if a new power converter is being installed for repair.*

In the HGA Active Filter, the serial communications cable between the Communications Interface PCB and the Power Converters are implemented with RS-485 differential transceivers. These differential transceivers are very robust in noisy industrial environments, if the serial communication bus is properly configured with a termination resistor at each end of the communications cable.

In the HGA Active Filter, the Communications Interface PCB is one end point of the serial communications bus and has a built-in bus termination resistor that is always in circuit.

The other end point of the serial communications cable will be at one of the active filter power converters. The power converter at the end of the communications cable should be configured with the bus termination resistor in circuit or ON. The bus termination resistor ON/OFF DIP switch is located near the J25 serial cable header (reference figure below).

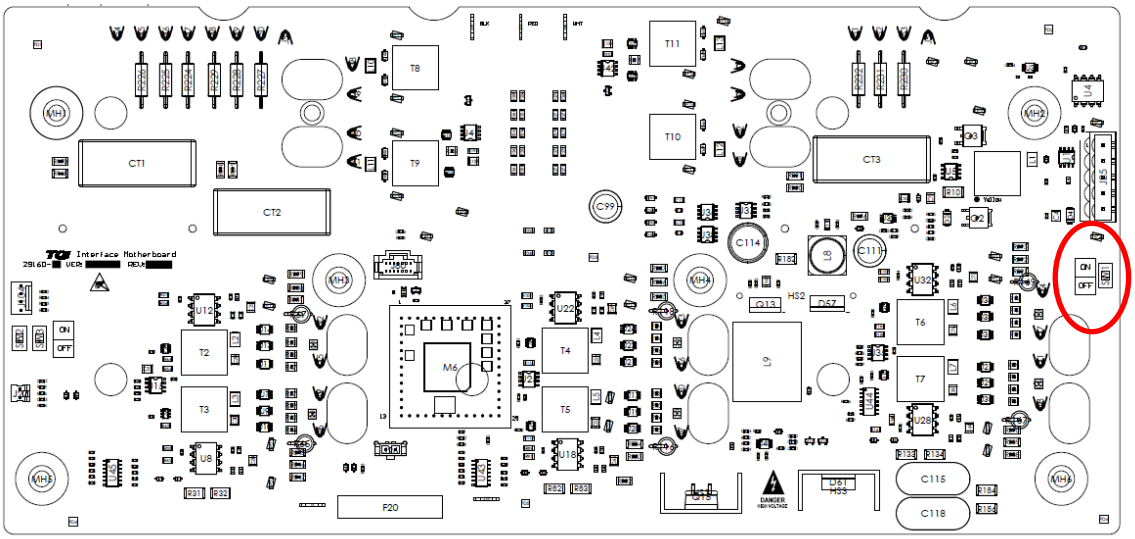

Figure 22: Power Converter PCB Serial Cable Termination Resistor ON/OFF Switch.

For single power converter systems (480 V 50A, 100A, 150A, 200A, 250A, 300A, 350A and 600 V 39A, 78A, 150A, 185A), the bus termination resistor DIP switch should always be set to on. For systems with two or more power converters (480 V 300A, 400A, 500A, 600A, 700A and 600 V 220A, 370A), only the bus termination resistor DIP switch of the power converter at the end of the serial cable should be set on. For multi power converter systems additional power converters located in the middle of the serial communication cable should have their bus termination resistors out of circuit or OFF (reference Figure 22).

A piece of thin, adhesive tape will be covering the bus termination switch. This tape is used to keep the conformal PCB sealant out of the switch mechanism during PCB assembly. This covering will need to be removed in order to change the switch ON/OFF position.

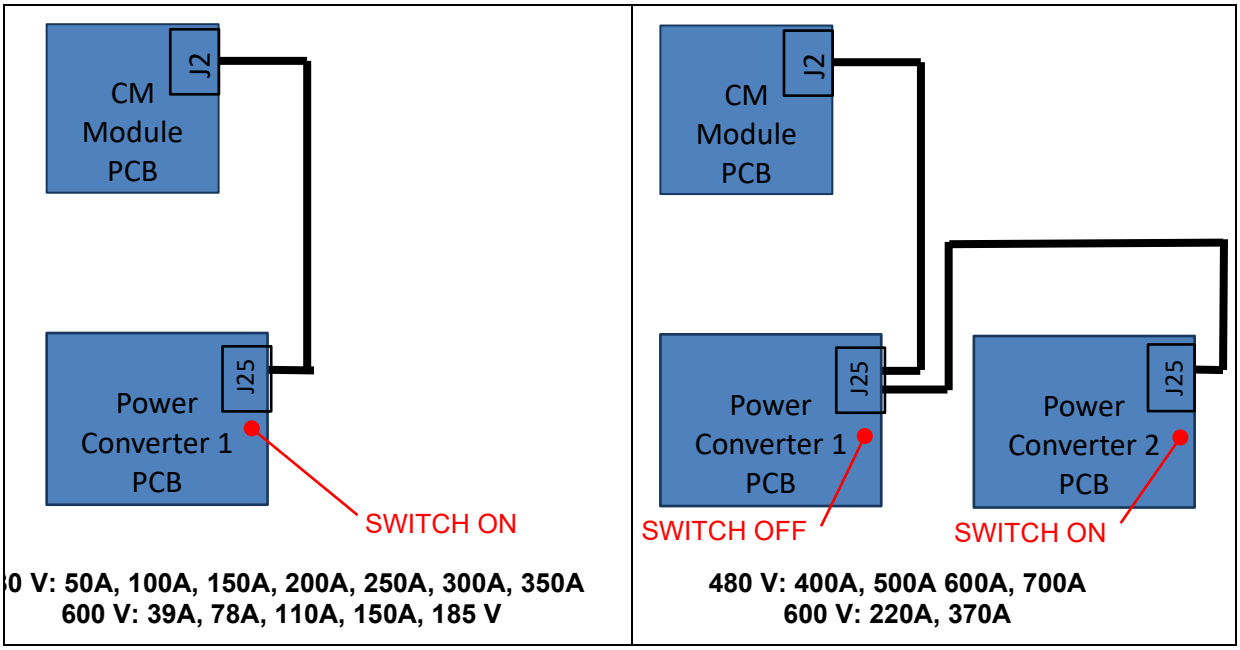

Figure 23: HGA Serial Cable Connection Diagram and Serial Bus Termination Switch Configuration

6.0 Filter Operation

Adjustments

The HGA has been factory calibrated and thoroughly tested. There is no need to make any adjustments.

Start Up (Commissioning)

Caution 	Thoroughly check the installation before applying power and operating the equipment for the first time.

Before Applying Power for the First Time

Inspect the installation to make sure that all equipment has been completely and correctly installed in accordance with the Installation Guidelines Section on Page 25 of this manual.

- If it is a floor mount unit, check to see that it is securely anchored to the floor.
- Check the panel and the inside of the enclosure for any foreign objects, dirt, metal filings, wire whiskers, and loose hardware.
- Verify that any covers or guards that were removed during installation were reinstalled.
- Ensure that the unit is properly grounded.
- Check for properly tightened connections.

General Operation

Warning 	Since the HGA is an active filter, it is always operating whenever the power is applied.

Warning 	Only qualified electricians should carry out all electrical installation and maintenance work on the HarmonicGuard® Active filter. Disconnect all sources of power to the HGA and connected equipment before working on the equipment. Do not attempt any work on a powered unit.

Warning 	Be aware that everything ahead of the circuit breaker will still be energized. It is important to note that the lack of lit LEDs does not necessarily mean that the HGA is not receiving power from an external source.

Maintenance and Service

HGA Reliability and Service Life

The HGA has been designed and thoroughly tested at the factory to ensure that it will perform reliably from the time it is put into service. The following periodic maintenance is recommended to ensure that the HarmonicGuard® Active filter will always perform reliably and provide the expected service life.

Periodic Maintenance

The following checks should be conducted monthly or more frequently when installed in harsh or dusty environments.

- Check to see that the installation environment remains free from excessive vibration, exposure to excessive dirt, moisture, and contaminants. Refer to the **Section 4** of this manual.
- Check to make sure that the enclosure ventilation openings are clean and unobstructed.
- Clean the air filter in units that have filtered air inlets. Clean as often as necessary to prevent dirt build-up from impeding air flow.
- Check for any dust or dirt build-up on the fans and heat sink fins.
- Check the operation of the cooling fans.
- Inspect the interior of the enclosure for signs of overheated components. Clean the interior of the enclosure whenever excess dirt has accumulated.
- Check the integrity of all power, ground, and control wiring connections.
- All electrical connections must be re-torqued annually.

Warning 	Many electronic components located within the filter are sensitive to static electricity. Voltages imperceptible to human touch can reduce the life, and affect performance, or destroy sensitive electronic devices. Use proper electrostatic discharge (ESD) procedures when servicing the filter and its circuit boards.
Warning 	Only qualified electricians should carry out all electrical installation and maintenance work on the HGA. Disconnect all sources of power to the HGA and connected equipment before working on the equipment. Do not attempt any work on a powered HGA. This HGA unit contains high voltages capacitors. Wait at least five minutes after disconnecting power from the filter before you attempt to service the conditioner. Check for zero voltage between all terminals on the capacitors. Also, check for zero voltage between all phases of the input and output lines. All maintenance and troubleshooting must be done by a qualified electrician. Failure to follow standard safety procedures may result in death or serious injury. **Unless an external disconnect means has been provided everything ahead of the filter circuit breaker will still be energized.**

Application of Aprilaire 412 Filter Adhesive Coat for Type 3R Enclosures

An adhesive coating can be applied to the washable air filters used in the HGA Type 3R enclosures to increase the effectiveness of the filter. If the adhesive coating is used, the air filters should be periodically inspected and re-coated. To order the Air Filter Adhesive Spray Coating, contact TCI Technical Support and order TCI part number 29636.

Note: *These steps apply only to the Type 3R Enclosure Option.*

- Remove the air filter from the enclosure. The air filters are in the door, held in place with Torx screws. Rotate the door hinge to allow space to slide out the air filters.
- Verify that the air filter is clean. If the air filter is dirty, flush with water and allow to dry before applying adhesive. Use room temperature water at low pressure.
- Choose a flat working surface large enough to lay down the air filter.
- Lay down some newspaper to protect the work area; the adhesive spray may stain the area that it is sprayed. Place the air filter on top of the newspaper.
- Use 10 oz spray bottle "Aprilaire Super Filter Coat Adhesive" to spray the air filter using 2-4 pumps.
- Flip over the air filter and spray the other side using 2-4 pumps.
- Install the air filter into the enclosure. Take care to avoid exposure to dirt and dust before installation.

Reference Aprilaire Super Filter Coat Adhesive manufacturer data sheet for additional precautions and storage instructions.

Reference Drawings

There could be slight differences between your unit and the configurations shown in this manual. It is recommended that you refer to the drawings provided with your specific equipment when conducting troubleshooting operations. Reference schematics are also available online for download at transcoil.com on the HGA active filter product page.

Overload / Over Current Protected

The filter has factory-set built-in electronic overload and over current protection. If the converter current exceeds the preset instantaneous peak, the converter will shut down to prevent permanent damage to the converter, and at which time, it will indicate a fault. Faults that do not automatically reset can be cleared by pressing the stop button on the HMI display.

An indication that the filter is going into overload will be observed by a gradual worsening of the total harmonic distortion (THD), or power factor, as the load increases. The HGA filter units can be paralleled to increase total corrective current capability if a unit is undersized for a particular application. Call TCI technical support for options to expand the installed system current capability.

Circuit Breaker Protection

The HGA Unit may come factory-equipped with a circuit breaker. This circuit breaker is used to protect the unit and the point of interconnection during a fault condition. The circuit breaker can also be used to disconnect the unit from its point of common coupling. The size and type of circuit breaker must not be altered without consulting TCI engineering.

Notes:

- Open chassis units can be provided without circuit breakers. The end user must protect the HGA with the following UL listed molded case circuit breaker.
- All circuit breakers referenced below are 480 V circuit breakers and the trip levels specified are at 480 V. For 600 V units that consist of a 600 V/480 V K-Rated autotransformer paired with a 480 V active filter, the unit circuit breaker is in the 480 V active filter connected to the 480 V secondary of the autotransformer.
- 45Amp to 50Amp 480 V (39A 600 V): A max peak let-through current of 26 kA in correspondence with a short circuit of 100 kA at 480 V, and a max peak let-through of 24kA for 65kA. The trip current setpoint for the 45A and 50A active filters must not exceed 100 Amps.
- 90Amp to 100Amp 480 V (78A 600 V): A max peak let-through current of 26 kA in correspondence with a short circuit of 100 kA at 480 V, , and a max peak let-through of 24kA for 65kA. The trip current setpoint for the 90Amp and 100A active filters must not exceed 125 Amps.
- 150Amp 480 V: A max peak let-through current of 40 kA in correspondence with a short circuit of 100 kA at 480 V, and a max peak let-through of 39kA for 65kA. The trip current setpoint for the 150A active filter must not exceed 175Amps.
- 200Amp 480 V (150A 600 V): A max peak let-through current of 55 kA in correspondence with a short circuit of 100 kA at 480 V, and a max peak let-through of 48kA for 65kA. The trip current setpoint for the 200A active filter must not exceed 225 Amps.
- 250Amp 480 V (185A 600 V): A max peak let-through current of 55 kA in correspondence with a short circuit of 100 kA at 480 V, and a max peak let-through of 52kA for 65kA. The trip current setpoint must not exceed 300 Amps.
- 300Amp 480 V (220A 600 V): A max peak let-through current of 75 kA in correspondence with a short circuit of 100 kA at 480 V, and a max peak let-through of 52kA for 65kA. The trip current setpoint for the 300A active filter must not exceed 375 Amps.
- 350Amp 480 V (270A 600 V): A max peak let-through current of 75 kA in correspondence with a short circuit of 100 kA at 480 V, and a max peak let-through of 52kA for 65kA. The trip current setpoint for the 350A active filter must not exceed 550 Amps.
- 400Amp 480 V (300A to 370A 600 V): A max peak let-through current of 63 kA in correspondence with a short circuit of 100 kA at 480 V, and a max peak let-through of 52kA for 65kA. The trip current setpoint for the 400Amp active filter must not exceed 600 Amps.
- 500Amp 480 V (270A 600 V): A max peak let-through current of 75 kA in correspondence with a short circuit of 100 kA at 480 V, and a max peak let-through of 52kA for 65kA. The trip current setpoint for the 500A active filter must not exceed 600 Amps.
- 600Amp 480 V (270A 600 V): A max peak let-through current of 75 kA in correspondence with a short circuit of 100 kA at 480 V, and a max peak let-through of 67kA for 65kA. The trip current setpoint for the 600A active filter must not exceed 700 Amps.
- 700Amp 480 V (270A 600 V): A max peak let-through current of 75 kA in correspondence with a short circuit of 100 kA at 480 V, and a max peak let-through of 67kA for 65kA. The trip current setpoint for the 700A active filter must not exceed 800 Amps.

Table 15: Active Filter 100kAIC Circuit Breaker Manufacturer Part Number and Trip Ratings.

HGA Unit Rating*		ABB - Option 2000		Allen Bradley - Option 5000		Eaton - Option 7000		LSIS - 0300	
480VAC	600VAC***	Amps**	MFG P/N	Amps**	MFG P/N	Amps**	MFG P/N	Amps**	MFG P/N
45A 50A	39A	80A	XT2LQ3080BFF000XXX	100A	140G-H0F3-D10	100A	EGC3100FFG	N/A	N/A
90A 100A	78A	125A	XT2LU3125BFF000XXX	125A	140G-H0F3-D12	125A	EGC3125FFG	N/A	N/A
150A	110A	150A	XT4LQ3175BFF000XXX	175A	140G-J0F3-D17	175A	JGC3175FAG	N/A	N/A
200A	150A	225A	XT4LQ3225BFF000XXX	225A	140G-J0F3-D22	225A	JGC3225FAG	N/A	N/A
250A	185A	300A	T5LQ300TW	300A	140G-K0F3-D30	300A	LGC3300FAG	N/A	N/A
300A	220A	400A	T5LQ400TW	400A	140G-K0H3-D40	350A	LGC3350FAG	N/A	N/A
350A	260A	400A	T5LQ400TW	400A	140G-K0H3-D40	500A	LGC3500FAG	N/A	N/A
400A	300A	N/A	N/A	N/A	N/A	600A	LGC3600FAG	N/A	N/A
500A	370A	N/A	N/A	N/A	N/A	600A	LGC3600FAG	N/A	N/A
600A	450A	N/A	N/A	N/A	N/A	N/A	N/A	630A	UTS800LT NG0 630A 3P LL UL
700A	520A	N/A	N/A	N/A	N/A	N/A	N/A	800A	UTS800LT NG0 800A 3P LL UL

*The HGA Active Filter controls have a current limit that limits the filter output current to the amp rating of the active filter.

**Amps listed are maximum values for the circuit breaker. Actual trip setpoints may vary.

***For 600 V units the breaker is located on the 480 V secondary of the included 600 V/480 V K-Rated Autotransformer.

****Trip setpoints should be set following manufacturer instructions.

Table 16: Active Filter 65kAIC Circuit Breaker Manufacturer Part Number and Trip Ratings.

HGA Unit Rating*		ABB - Option 0100		Allen Bradley - Option 4000		Eaton - Option 6000		LSIS - 0200	
480VAC	600VAC***	Amps**	MFG P/N	Amps**	MFG P/N	Amps**	MFG P/N	Amps**	MFG P/N
45A 50A	39A	80A	XT2HQ3080BFF000XXX	100A	140G-G6C3-D10	100A	EGH3100FFG	N/A	N/A
90A 100A	78A	125A	XT2HU3125BFF000XXX	125A	140G-H6F3-D12	125A	EGH3125FFG	N/A	N/A
150A	110A	150A	XT4HQ3175BFF000XXX	175A	140G-J6F3-D17	175A	JGH3175FAG	N/A	N/A
200A	150A	225A	XT4HQ3225BFF000XXX	225A	140G-J6F3-D22	225A	JGH3225FAG	N/A	N/A
250A	185A	300A	T5HQ300TW	300A	140G-K6F3-D30	300A	LGH3300FAG	N/A	N/A
300A	220A	400A	T5HQ400TW	400A	140G-K6H3-D40	350A	LGH3350FAG	N/A	N/A
350A	260A	400A	T5HQ400TW	400A	140G-K6H3-D40	500A	LGH3500FAG	N/A	N/A
400A	300A	N/A	N/A	N/A	N/A	600A	LGH3600FAG	N/A	N/A
500A	370A	N/A	N/A	N/A	N/A	600A	LGH3600FAG	N/A	N/A
600A	450A	N/A	N/A	N/A	N/A	N/A	N/A	630A	UTS800HT NG0 630A 3P LL UL
700A	520A	N/A	N/A	N/A	N/A	N/A	N/A	800A	UTS800HT NG0 800A 3P LL UL

*The HGA Active Filter controls have a current limit that limits the filter output current to the amp rating of the active filter.

**Amps listed are maximum values for the circuit breaker. Actual trip setpoints may vary.

***For 600 V units the breaker is located on the 480 V secondary of the included 600 V/480 V K-Rated Autotransformer.

****Trip setpoints should be set following manufacturer instructions.

Warning	If the system breaker has been tripped, do not attempt to re-energize the HGA unit until the cause of the trip has been determined.

Pre-Charge Circuit Over Current Protection
The Pre-Charge circuitry is used to limit the in-rush current to a safe level upon powerup. When started, the Pre-Charge circuitry will be switched out of circuit. If for some reason this circuitry should malfunction, class CC fuses are utilized to limit the current as to not exceed the ratings of the components.

Over Temperature Protection
The converter has a thermal fold back mechanism that will automatically reduce unit output current as the converter temperature approaches its shutdown threshold. Additionally, the converter has an internal heat sink over temperature protection, which will shut down the converter if its threshold is exceeded. The fans will continue to run and once the heat sink cools down the converter will automatically restart if the auto restart feature is enabled.

There is a secondary overtemperature circuit, which monitors the temperature of the power resistors and inductors located on the chassis of the HGA. The sensor is a snap action switch activated when the over temperature threshold is reached. The fans will continue to run and once the thermal switch resets the converter will automatically restart if the auto restart feature is enabled.

Note that if the unit faults continuously, this likely indicates something more serious with the operation of the unit. The unit will shut down on an Auto Restart Limit fault if the set number of faults has occurred in a set time frame, as configured on the HMI. In this case, the fault will remain latched until the fault is reset manually via the local HMI installed in the unit.

The HMI display can be used to diagnose which fault has occurred, using the Active Faults and Fault History screens. Reference Table 32: Fault Codes for fault nomenclature.

Troubleshooting
Failure to maintain the correct polarity of the current transformers (CTs) will cause an over current fault on power up. The converter will not run and will stay in a stopped condition. If it is suspected that he CTs are installed backwards or the secondary wiring is incorrect, refer to the steps below to isolate the error.

***Note:** CT operation can be verified via the HMI touchscreen feedback waveform plot screens. Reference the HMI VLine & ILine Waveform Plot Sub Screen for details.*

Warning	Only qualified electricians should carry out all electrical installation and maintenance work on the HGA. Failure to follow standard safety procedures may result in death or serious injury. Disconnect all sources of power to the HGA and connected equipment before working on the equipment. Do not attempt any work on a powered HGA. Also, check for zero Voltage between all phases of the input and output lines. **Operating current transformers with the secondary winding open can result in a high Voltage across the secondary terminals, which may be dangerous to personnel or equipment.**

1. If the CTs and wiring are easily accessible, double check the CT orientation for proper direction, and trace the secondary wiring against the applicable diagrams in **Section 4** for polarity, phasing and connection to terminal TB-1. Correct any errors and apply power for proper power-up, if it doesn't clear the fault or if accessibility is too difficult proceed to step #2.
2. There is a possibility that the CTs markings are different from the diagrams provided. This could affect the polarity, to verify this try reversing the two leads on TB-1 positions 1 & 2, do

the same with wires in positions 3 & 4. Apply power for proper power-up; if it doesn't proceed to #3.

3. Reverse just one set of CT leads at a time, first 1 & 2; verify power-up. If it doesn't, work put wires 1 & 2 back and try the same with wires 3 & 4. Apply power for proper power-up; if it doesn't, replace all wiring to its original positions, and proceed to #4.
4. There is a possibility that the phasing of the CT L1 and L3 are incorrect. To test this theory, swap the two wires on TB-1 positions 1 & 2 with the two wires in positions 3 & 4. Apply power for proper power-up; if it doesn't repeat steps 2 and 3.
5. If the HGA doesn't indicate a run status after completion of steps 1 through 4, contact TCI technical support for further assistance.

System Failure

The Digital Signal Processor is continually monitoring the performance and fault status of the filter. It will shut down the converter section if the processor should sense a fault. The filter is also equipped with a circuit breaker providing a second layer of over current protecting for the converter section. The circuit breaker can also serve as a means of electrical isolation from the system power grid. It is recommended by TCI that all power to the HarmonicGuard® Active filter be disconnected. If you elect to service the HGA by using the circuit breaker to isolate the converter section, please take special note of the following warnings:

Warning 	Many electronic components located within the filter are sensitive to static electricity. Voltages imperceptible to human touch can reduce the life, and affect performance, or destroy sensitive electronic devices. Use proper electrostatic discharge (ESD) procedures when servicing the filter and its circuit boards.

Warning 	Only qualified electricians should carry out all electrical installation and maintenance work on the HGA. Disconnect all sources of power to the HGA and connected equipment before working on the equipment. Do not attempt any work on a powered HGA. This HGA unit contains high Voltages and capacitors. Wait at least five minutes after disconnecting power from the filter before you attempt to service the conditioner. Check for zero Voltage between all terminals on the capacitors. Also, check for zero Voltage between all phases of the input and output lines. All maintenance and troubleshooting must be done by a qualified electrician. Failure to follow standard safety procedures may result in death or serious injury. **Unless an external disconnect means has been provided everything ahead of the filter circuit breaker, including the reactors, will still be energized.**

Required Equipment

- AC Voltmeter and ammeter or multimeter designed for true RMS measurements in a harmonic rich circuit and suitable for the rated current and Voltage marked on the nameplate. The meter should have 1000 Volt minimum isolation.
    - Clamp-on current probe suitable for the rated current and Voltage marked on the nameplate.
    - Clip-on Voltage probes suitable for the rated Voltage marked on the nameplate. Select probes that can be securely clipped on to the test points without shorting between points or falling off.

***Note**: When disconnecting wires from components and terminations, mark the wires to correspond to their component and terminal connection. Extreme care should be taken when removing the fast-on terminals from the circuit board. Excessive force will result in damaging the interface board and require the converter to be repaired by TCI authorized personnel only.*

Converter Inspection

- Verify that power has been removed from converter and 5 minutes has passed before inspection.
- Remove plastic cover from over converter section.
- Visually check the circuit boards for debris, contamination, overheated traces, burnt circuit board, overheated, cracked, or broken components, corrosion, and poor solder joints.
- Check all wires and terminals connected to the circuit boards.
- Check the four electrolytic capacitors for bulges, ruptures, popped vent plugs, discoloration, or leakage.
- Check the power semiconductors mounted to heat-sink for cracked cases, ruptures, debris, arcing, and burning.
- Check for any loose connections, if no apparent damage is found to the power semiconductors.
- Measure resistance of power semiconductors using a multi-meter set on the diode check setting, see Figure 24: (600 V) 39, 78 Amp & (480 V) 45, 90, 100 Amp Power Component Layout. Look for opens, ∞, or dead short readings. With the red lead of your meter connected to the far-right negative terminal of the capacitor bank, measure with the black lead of the meter to each of the three output terminals (bus bars), the reading should be approximately 0.35Ω. Reverse the meter leads and repeat measuring to each terminal. This time a low reading will be present, which will continue to increase; this is an indication of a capacitor charging. Next, connect the black meter lead to the “positive capacitor terminal” and again measure to each of the output terminals with the other lead; the reading should be approximately 0.35Ω. Reverse the meter leads and repeat measuring to each terminal. Again, it will be a low reading, which will continue to increase. If the readings are as described, likely the power semiconductors are good. If any readings are opens or dead shorts, it will be an indication that something is bad in the power section. Do not reapply power if you are not sure the IGBTs are good.

Troubleshooting Flow Chart

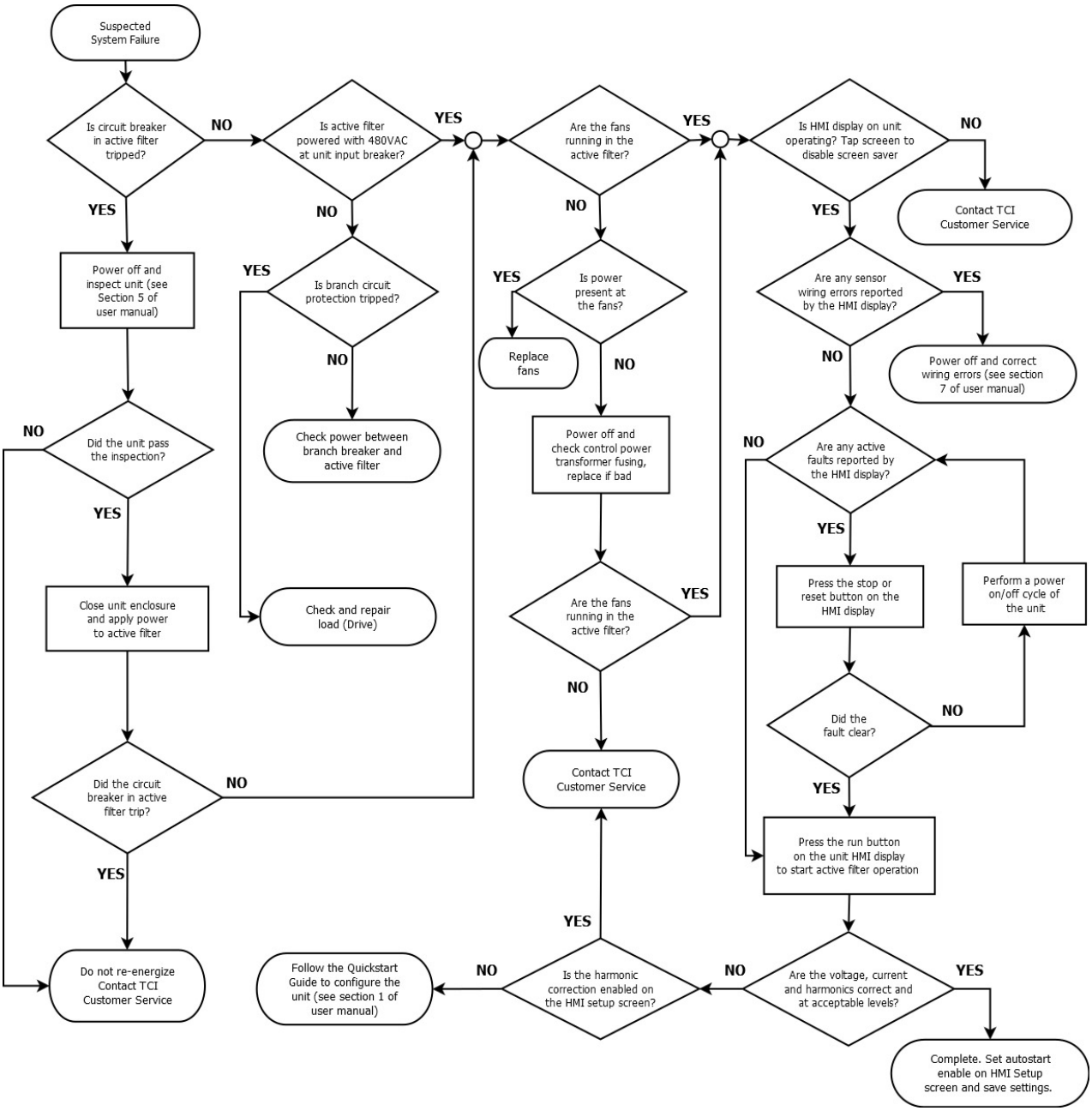

Figure 24: HGA System Troubleshooting Flowchart

Power Component Layout

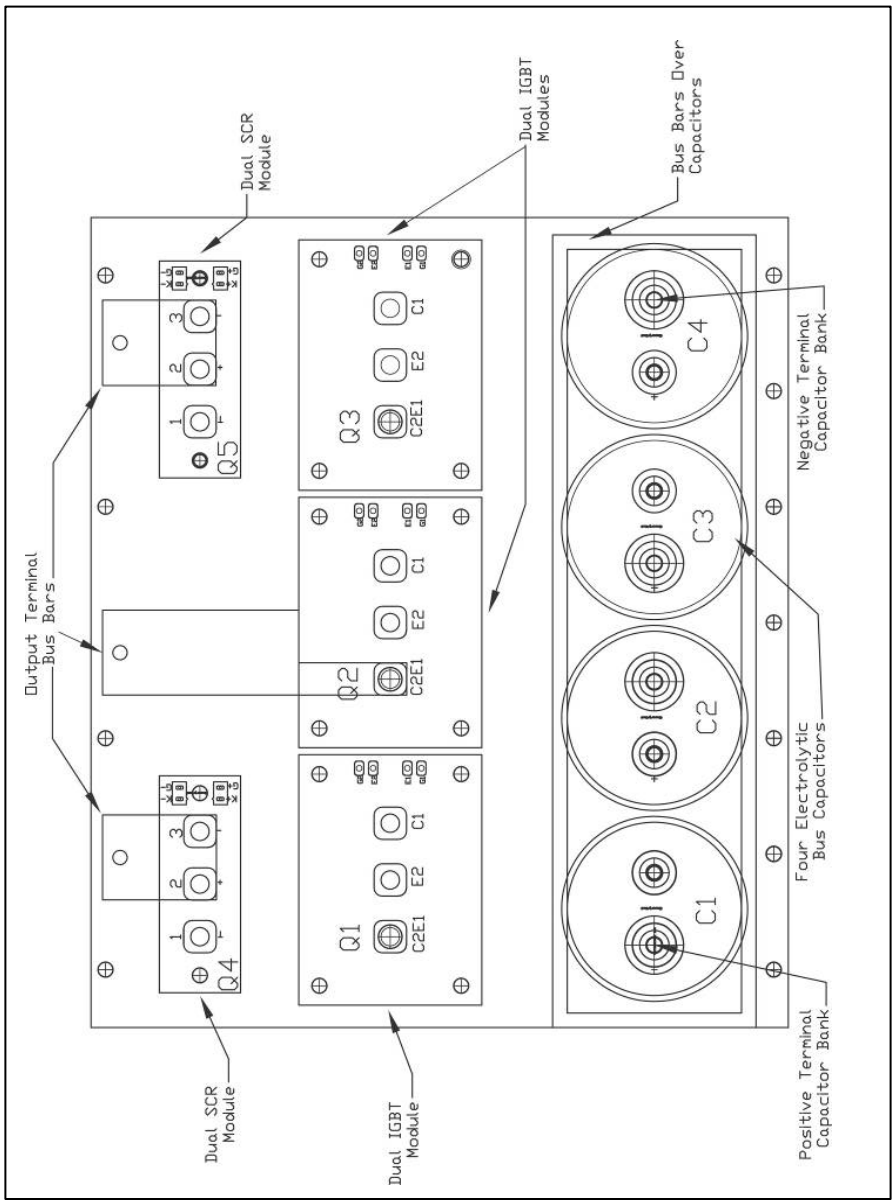

Figure 25: (600 V) 39, 78 Amp & (480 V) 45, 90, 100 Amp Power Component Layout

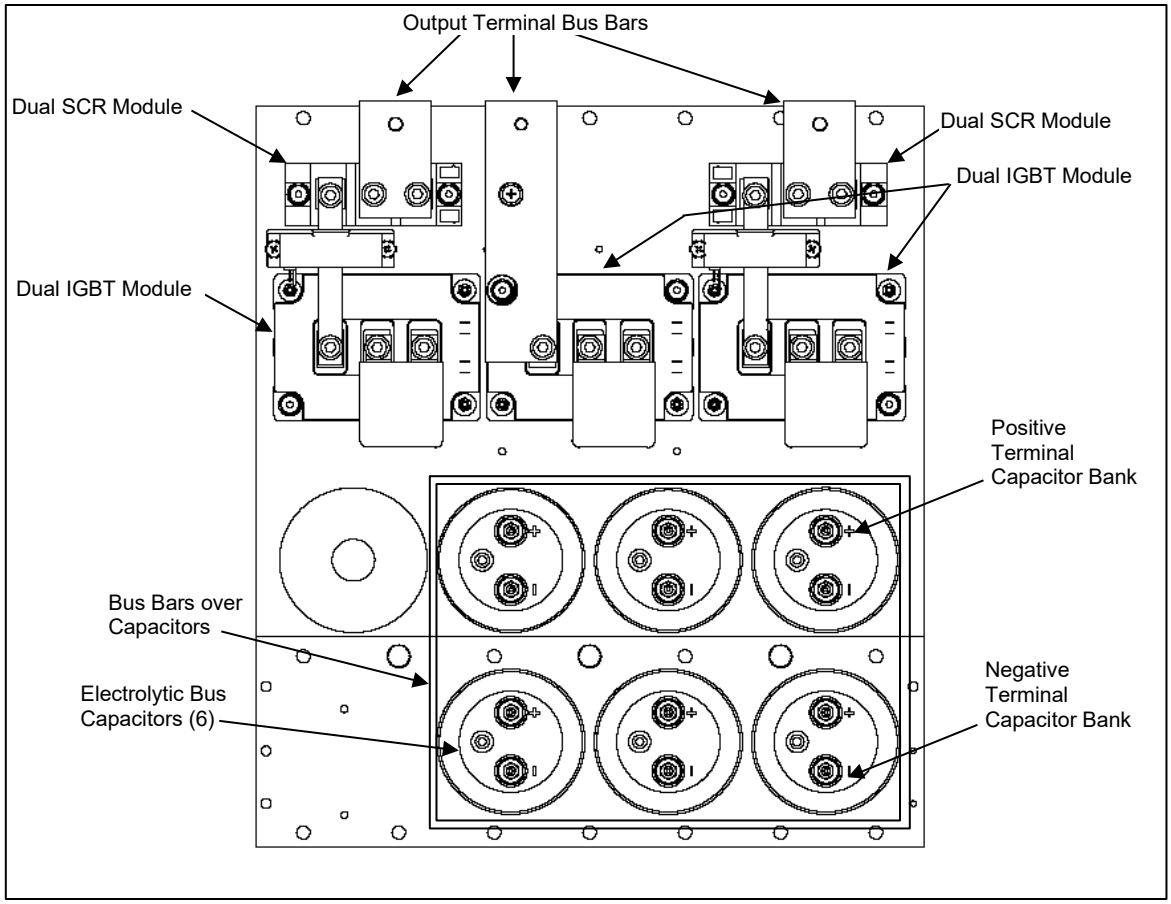

Figure 26: (480 V) 150, 300 Amp & (600 V) 110, 220 Amp Power Component Layout

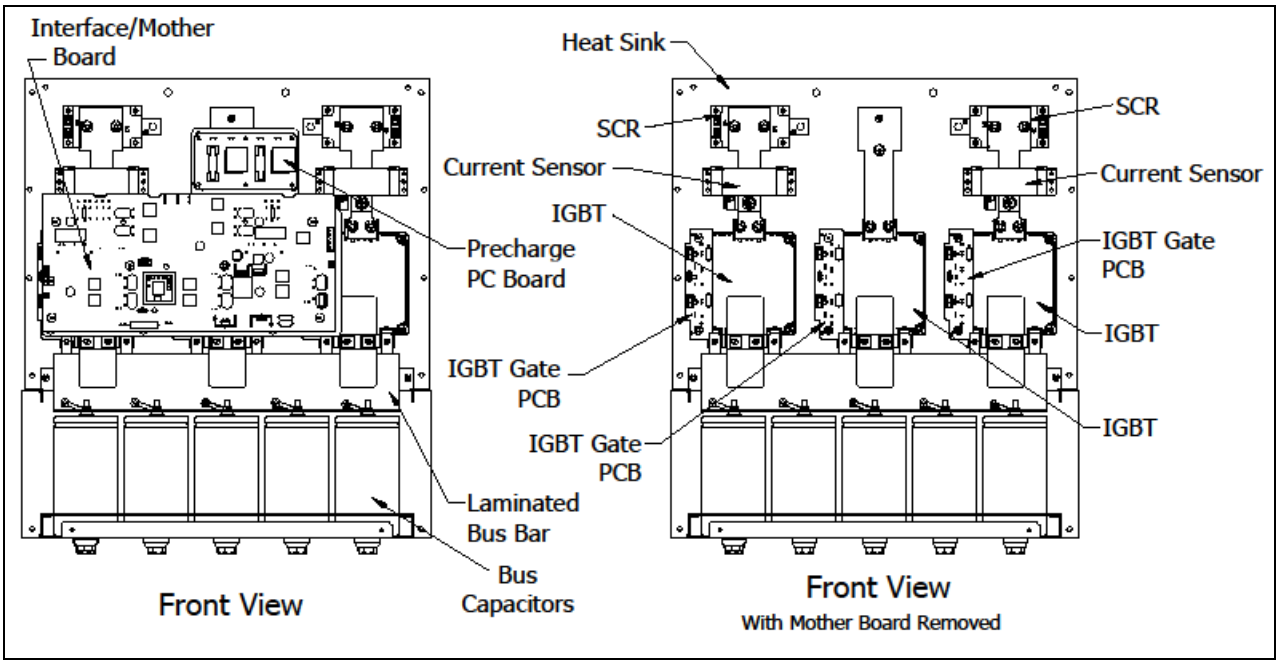

Figure 27: (480 V) 200, 250, 500 Amp & (600 V) 150, 185, 370 Amp Power Component Layout

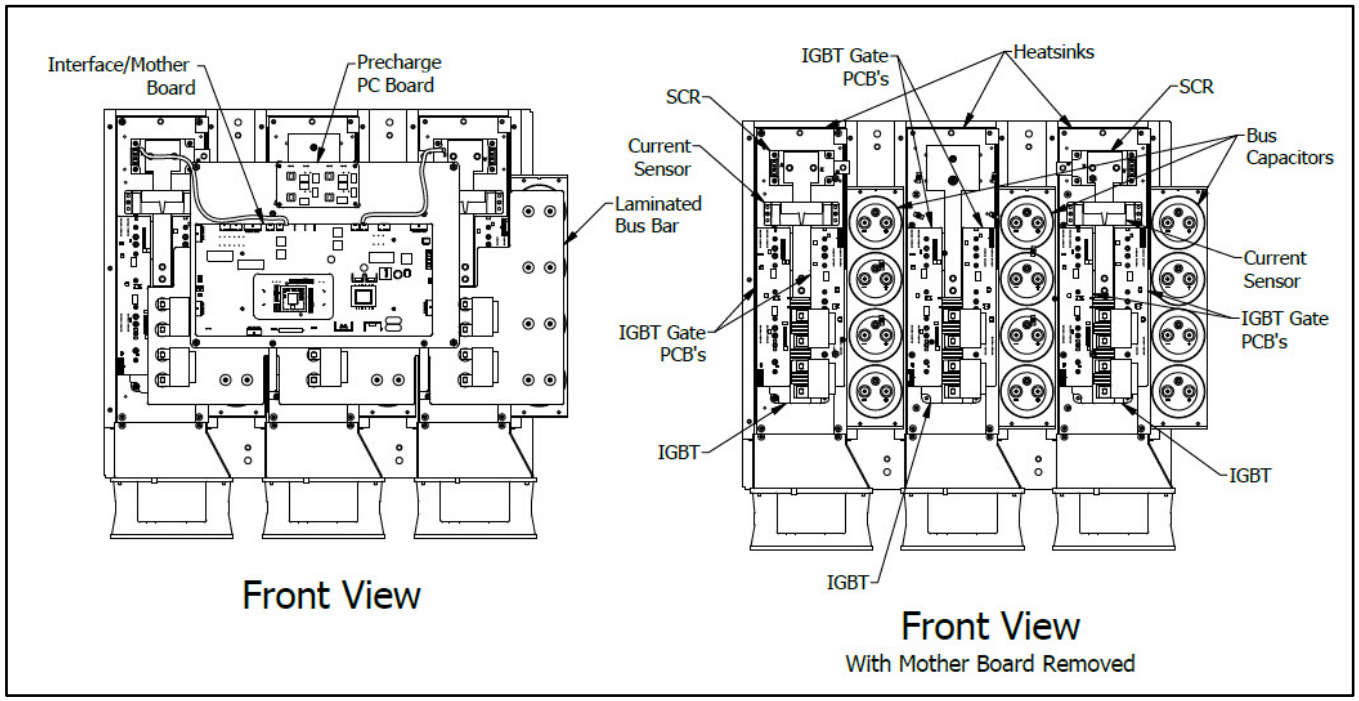

Figure 28: (480 V) 300N, 350, 600, 700 Amp Power Component Layout

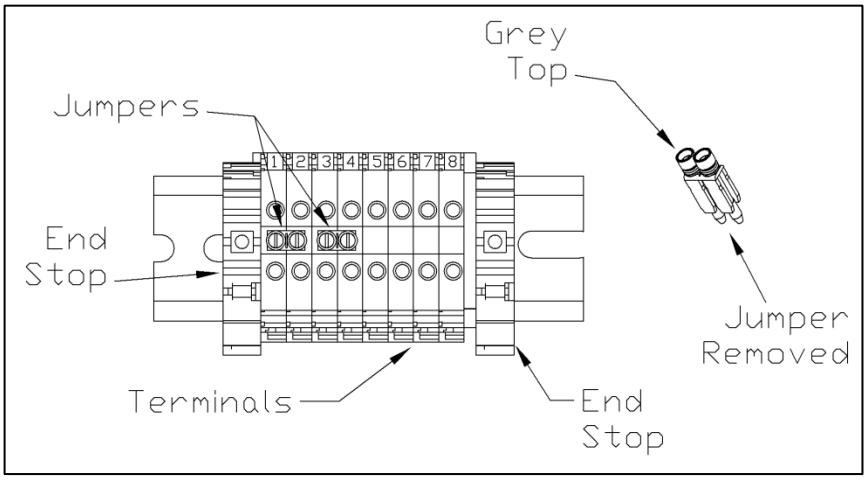

Figure 29: TB-1 Terminal Block

Warning	Only qualified personnel should operate the HarmonicGuard® Active filter with the door open. Failure to follow standard safety procedures may result in death or serious injury. Do not attempt any work on a powered filter converter. The HGA contains high Voltages and capacitors. Wait at least five minutes after disconnecting power from the converter before you attempt servicing. Check for zero Voltage between all terminals to the converter. **Be aware everything ahead of the circuit breaker will still be energized.**

Replacement Parts

If replacement parts are needed, please contact your TCI representative. To ensure that the HarmonicGuard® Active filter continues to perform to its original specifications, replacement parts should conform to TCI specifications. Use of non-TCI approved components will void all warranties.

Factory Contacts and Technical Support

For technical support, contact your local TCI distributor or sales representative. You can contact TCI directly at 1-800-824-8282. Select "Customer Service" or "Technical Support" and have your HarmonicGuard® Active filter nameplate information and any drawings available.

Outline and Mounting Dimension Drawings

Installation drawings are available online for download at http://www.transcoil.com/ on the HGA active filter product page. The installation diagrams show the overall enclosure dimensions, the conduit access areas and the wiring connection points. The installation diagrams also show the major internal components pictorially. A paper copy of the installation diagram is included in the literature kit shipped with all units.

7.0 HMI Introduction

The Interface Module provides the user with a convenient way to monitor the operation of TCI's HarmonicGuard® Active filter and allows for the ability to adjust run-time set-points under password control. This section describes how to install, operate, and maintain the Interface Module.

Overview

The Interface Module has three major components; the Interface PCB, the HMI Display and an optional network Communications Gateway (see Figure 29).

The interface PCB contains a Chassis Communications Port that connects to the power converter of the HarmonicGuard® Active filter. The interface PCB translates status and commands data between the power converter controls and the HMI Display. The interface PCB also contains the 24V Relay I/O for basic status monitoring and run/stop control of the HarmonicGuard® Active filter.

The HMI Display is a 6" color Touchscreen display containing a series of status screens that provide the user with a convenient way to monitor the operation of the HarmonicGuard® Active filter. The HMI display also contains an integrated ModbusRTU network connection for remote monitoring of the HarmonicGuard® Active filter.

The optional network Communications Gateway can be connected to the integrated ModbusRTU network connection in the HMI Display to translate the ModbusRTU protocol to an alternate Fieldbus or Industrial Ethernet protocol such as Ethernet/IP.

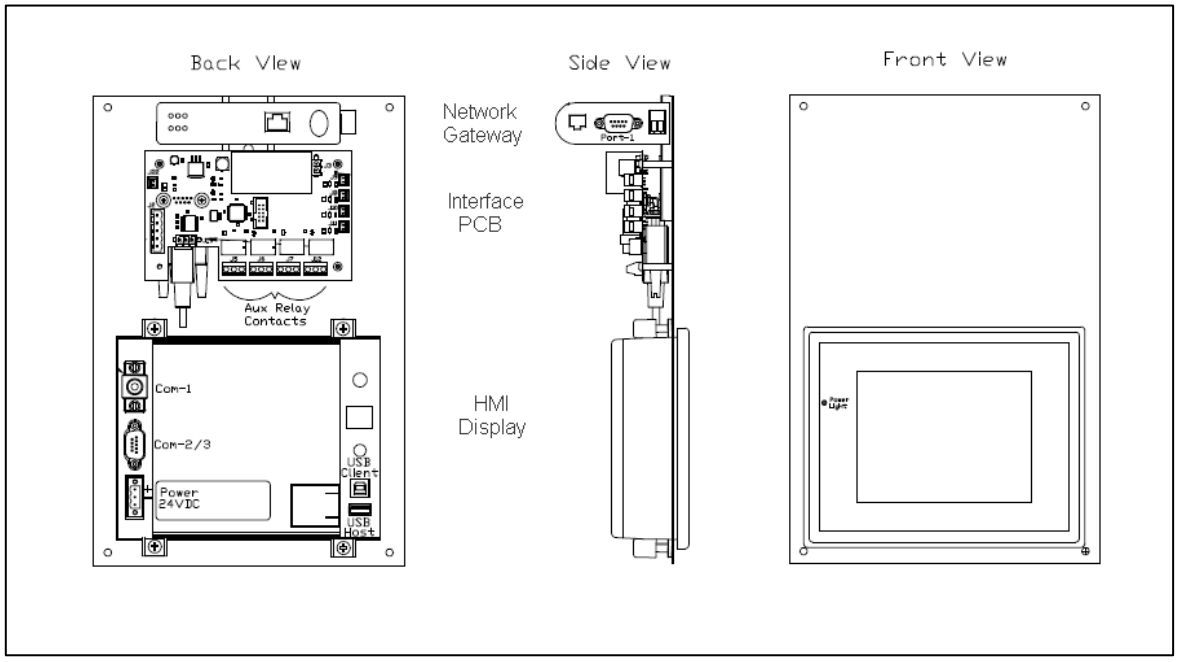

Figure 30: Interface Module Components

Additional Information

Caution	
	This section provides general information describing the Interface Module. Be sure to carefully review the more specific information provided by the drawings shipped with the module. Information from by the drawings takes precedence over the information provided in this section. The information and ratings given in this manual are approximate and should not be used for any purpose requiring exact data. Contact the factory in situations where certified data is required. All data is subject to change without notice.

Receiving Inspection

The Interface Module has been thoroughly inspected and functionally tested at the factory and carefully packaged for shipment. After receiving the unit, immediately inspect the shipping container and report any damage to the carrier that delivered the unit. Verify that the part number of the unit received is the same as the part number listed on the purchase order. See appendix for part numbering details.

Installation Guidelines

Checklist

The following are the key points to be followed for a successful installation. These points are explained in detail in the following sections.

- Make sure the installation location will not be exposed to excessive vibration, corrosive or combustible airborne contaminants, excessive dirt or liquids.
- Select a mounting area that will allow adequate cooling air.
- Make sure that all wiring conforms to the requirements of the National Electrical Code (NEC) and/or other applicable electrical codes.
- Ground the HMI display by using the grounding terminal. Not only does this act as a safety, but it also filters out electrical noise.
- Check all connections and components thoroughly before applying power to the equipment.
- Check the panel and the inside of the enclosure for any foreign objects, dirt and/or loose hardware.

Location

The location of the Interface Module should be a suitable environment to assure proper performance and a normal operating life. Refer to the environmental specifications furnished in this manual and noted on the drawings with the Interface Module.

Warning	
	Unless specifically labeled as approved for such use, this equipment is not suitable for use in an explosive atmosphere or in a "Hazardous (Classified) Location" as defined in article 500 of the National Electrical Code (NEC).

- Display front rated Type 1 & 4X
- Avoid corrosive liquids or gasses
- Avoid explosive or combustible gases or dust
- Avoid excessive airborne dirt and dust (Pollution Degree 2, according to EN50178 and UL508C)
- Avoid excessive vibration (0.152 mm (0.006 in.) displacement, 1G peak)

Mounting

Mounting requires at least a depth of 4” (102 mm). The Interface Module will mount in a panel with a thickness of 0.02 to 0.35 inch (0.5-9.0 mm) with an opening 6.79” by 5.21” (173 by 133 mm). Fit the Interface Module assembly into the opening carefully pressing on all four corners. Use the mounting hardware (4 sets) to secure the assembly on the corners.

Warning: To avoid damaging the case, do not exceed a tightening torque of 3.47 to 4.34 lbs.-in (0.39-0.49 Nm). Care should be taken not to mount the Interface Module too close to a heat source (such as power resistors), which could be located behind the Interface Module.

Caution	The display panel is waterproof. But care should be taken to prevent grease, corrosive liquids and sharp objects from contacting the front panel.

Warning	Many electronic components located within the Interface Module and HMI are sensitive to static electricity. Voltages imperceptible to human touch can reduce the life, and affect performance, or destroy sensitive electronic devices. Use proper electrostatic discharge (ESD) procedures when servicing the Interface Module and HMI.

Wiring

***Note**: Some of the following sections only apply, if the Interface Module is not factory installed.*

A wiring block diagram of the Interface Module components is available in Figure 30.

When selecting a mounting location for the unit, plan for the routing of commutation and power cable. Keep the wiring away from power wires where electrical noise could be induced. All wiring should conform to the requirements of the National Electrical Code (NEC) and/or other applicable electrical codes. The length of the communication cable between the Interface module chassis communication port and the HarmonicGuard® Active filter power converter module should not exceed 25 feet (7.6 meters).

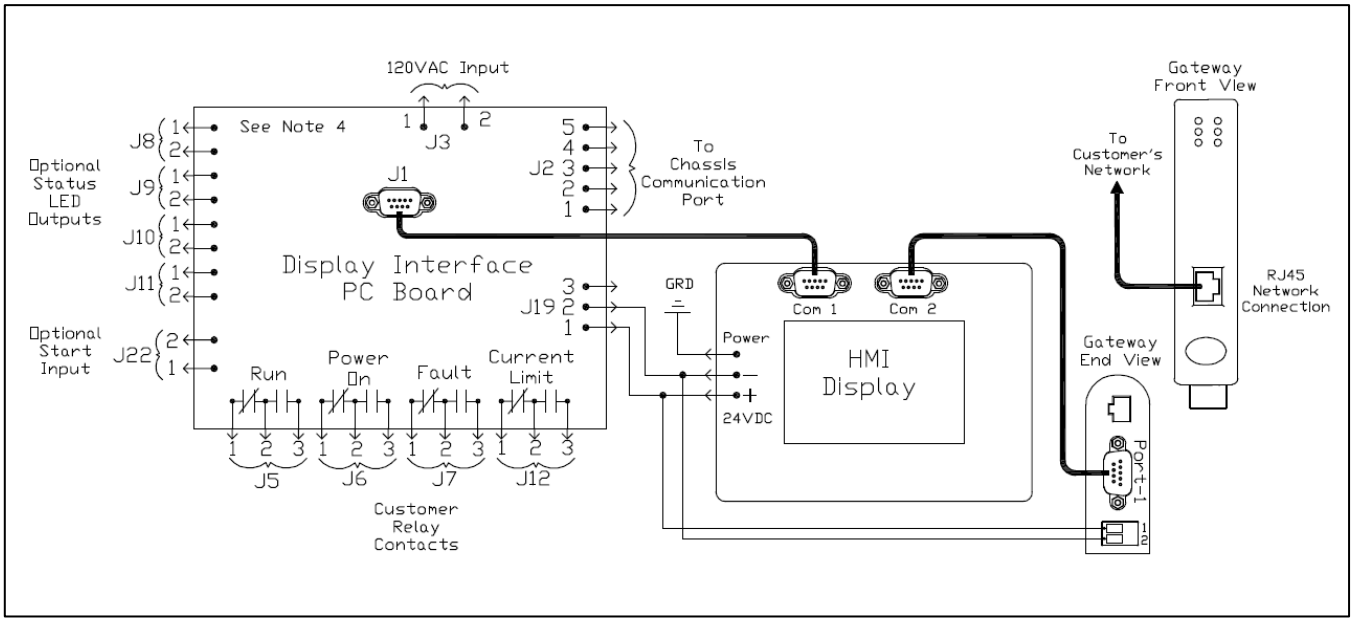

Figure 31: Interface Module Connections

Interface PCB Connections

Most customer connections to the Interface module will be made on the Interface PCB. Refer to connection diagrams in Figure 30. The details of the power and communications terminals are shown in Table 17. Form C relays are available on the Interface PCB, these connections are shown in Table 18. Four outputs are available on the Interface PCB.

The relay start command input connection on J22 of the interface PCB allows a contact closure to send a run command to the HarmonicGuard® Active filter. The relay start command input will only be acknowledged if the Relay Run/Stop Enable is set to Enabled on the HMI Display setup screen. Pressing stop locally via the HMI Display will set the enable for the relay start command to DISABLED.

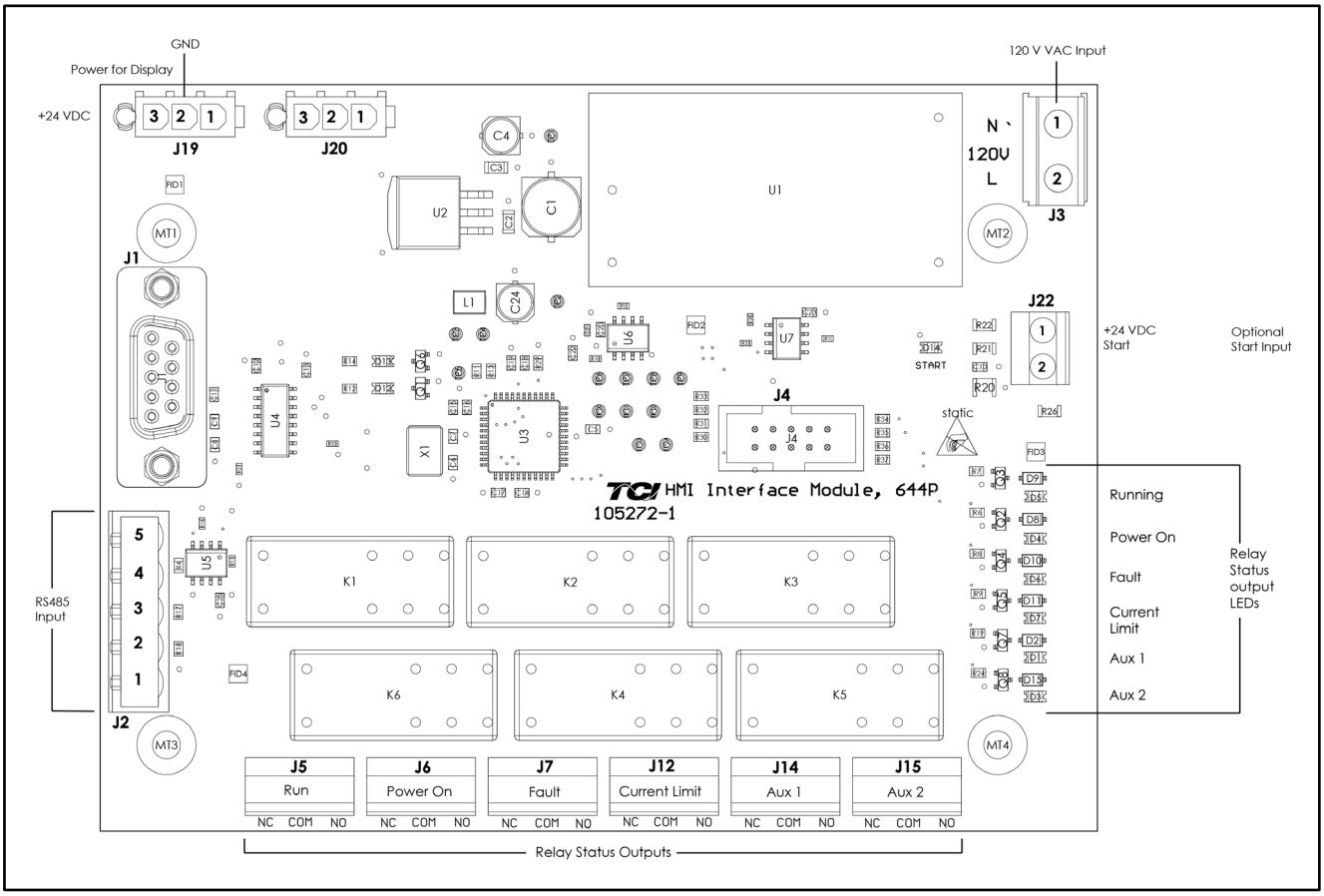

Figure 32: Interface PCB connections

Table 17: Power & Communications Terminals

Terminal	Pin	Description	Label	Rating
J1	1	HMI Display	For factory use	N/A
J2	1	RS485	Not Connected	N/A
	2		B	
	3		Ground	
	4		A	
	5		Not connected	
J3	1	Input Power	Neutral	120 VAC
	2		Line	
J4	1-14	Micro Programming	For factory use	N/A
J19	1	HMI Power Supply	24 VDC	24 VDC
	2		Common	
	3		Not Connected	
J22	1	Start Command	24 VDC	Contact Closure
	2		Start	

***Note**: The power terminal on the back of the HMI display accepts 28 to 14 AWG stranded wire, with a tightening torque of 4.4 in-lb. (0.5 Nm).*

Table 18: Form C Relay Contacts

Terminal	Pin	Description	Label	Tightening Torque	Wire Range
J5	1	Run	Normally Closed	4.4 lbs.-in (0.5 Nm)	28-14 Awg
	2		Common		
	3		Normally Open		
J6	1	Power On	Normally Closed	4.4 lbs.-in (0.5 Nm)	28-14 Awg
	2		Common		
	3		Normally Open		
J7	1	Fault	Normally Closed	4.4 lbs.-in (0.5 Nm)	28-14 Awg
	2		Common		
	3		Normally Open		
J12	1	Current Limit	Normally Closed	4.4 lbs.-in (0.5 Nm)	28-14 Awg
	2		Common		
	3		Normally Open		

***Note**: Form-C relay contacts are gold plated with a load rating of 2.0A @ 250VAC.*

HMI Display Connections

***Note**: The following section describes the default ModbusRTU network connection available on the base model. If an optional advanced network Communications Gateway is included in the Interface Module, see the appendix for the specific Communications Gateway configuration.*

The HMI display implements a ModbusRTU slave device over RS-485. This network connection is available on the COM2/3 DB9 connector on the back of the HMI Display (see Figure 32).

The output registers from the HarmonicGuard® Active filter are mapped to Modbus register address 40500. The input registers to the HarmonicGuard® Active filter are mapped to Modbus register address 40564. For definitions of the input and output data available via the network connection see tables below.

If the optional network Communications Gateway is present, the integrated ModbusRTU interface on the HMI Display will not be available. When configured, the Communications Gateway will occupy the ModbusRTU COM2/3 DB9 connector on the back of the HMI Display.

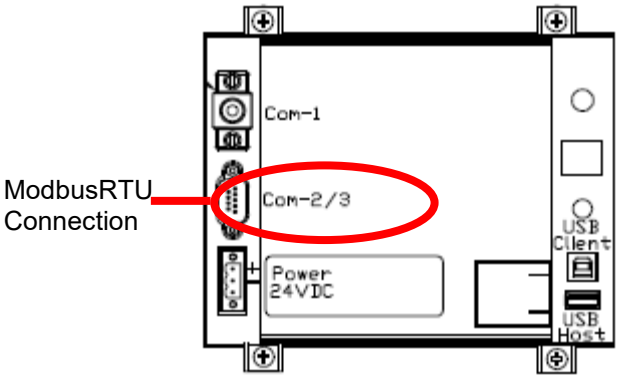

Figure 33: HMI ModbusRTU Connection

Table 19: Modbus Connector Pin Definitions

COM2/3 DB9 Pin	Signal Name	Signal Type
1	no connect	-
2	no connect	-
3	no connect	-
4	D+	RS-485 B (non-inverting)
5	GND	RS-485 SC/G
6	no connect	-
7	no connect	-
8	no connect	-
9	D-	RS-485 A (inverting)

Table 20: ModbusRTU Protocol Settings

Parameter	Default Value	Units
Baud Rate	19200	bps
Data Bits	8	bits
Stop Bits	1	bits
Parity	Even	-
Slave ID	113	-

Communications Gateway Connections (Optional)

If an optional advanced network Communications Gateway is included in the Interface Module, see **The Appendixes** for the specific Communications Gateway wiring details.

If the optional network Communications Gateway is present, the integrated ModbusRTU interface on the HMI Display will not be available. When configured, the Communications Gateway will occupy the ModbusRTU COM2/3 DB9 connector on the back of the HMI Display.

HMI Screen Elements

This section focuses on the operation of the HMI Display. The HMI Display contains several screens that allow the user to monitor the status of the line/load and the HarmonicGuard® Active filter. Additionally, the HMI display can be used for local run/stop control and basic setup of the HarmonicGuard® Active filter.

Table 21: General HMI Screen Elements

HMI Graphic Element	Example	Description
Buttons		Buttons will appear raised or depressed, depending on set point and command conditions.
Indicators		Indicator status fields will appear flat and are read only.
Numerical Displays		Display fields will appear flat. Numerical displays are read only.
Numerical Entry Fields		Numerical Entry fields appear indented. Selecting them will open a keypad for numerical entry.
Navigation Bar	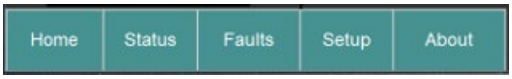	The Navigation Bar allows for easy navigation between the five major HMI screens. The Navigation Bar appears on all HMI screens.
Title Bar		The Title Bar contains the current system time, screen selection, and a stop button to turn off the system. The Navigation Bar appears on all HMI screens.

Initialization

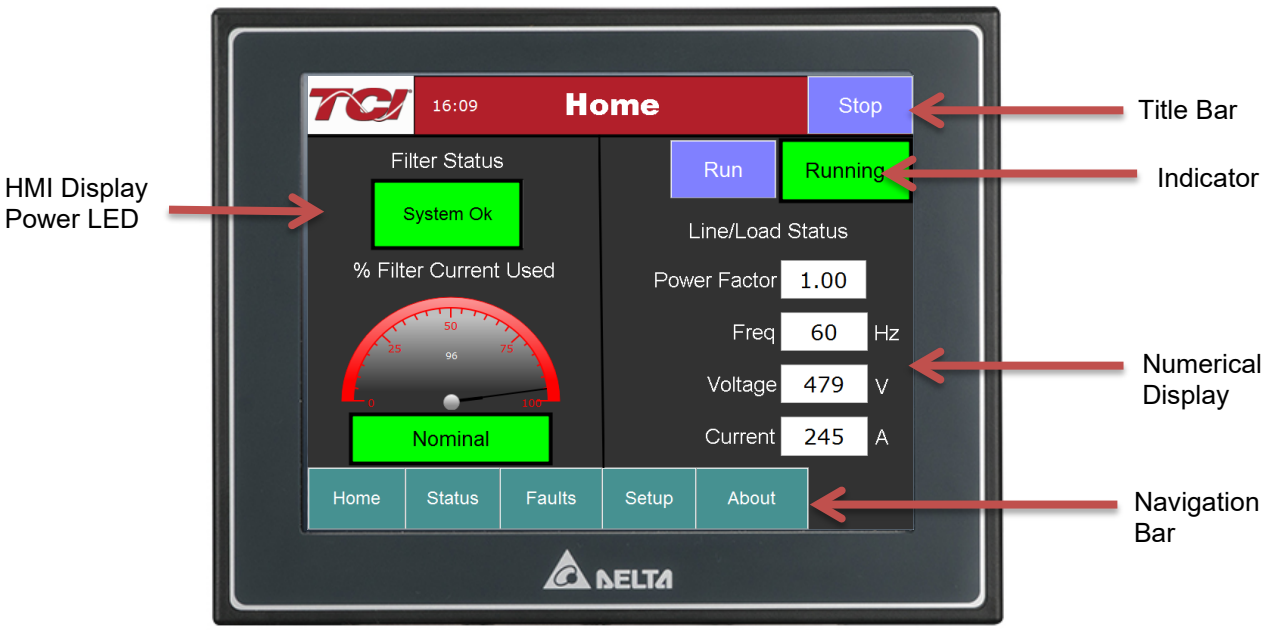

Figure 34: HMI Display

When first powered, the green LED (Power) on the HMI Display will light (see Figure 33).

After a five second boot up sequence, the Home Screen will be displayed. If the home screen is not displayed and power is available to the HMI Display, see Section 8.0 Troubleshooting for diagnosing common problems.

HMI Installation Diagram

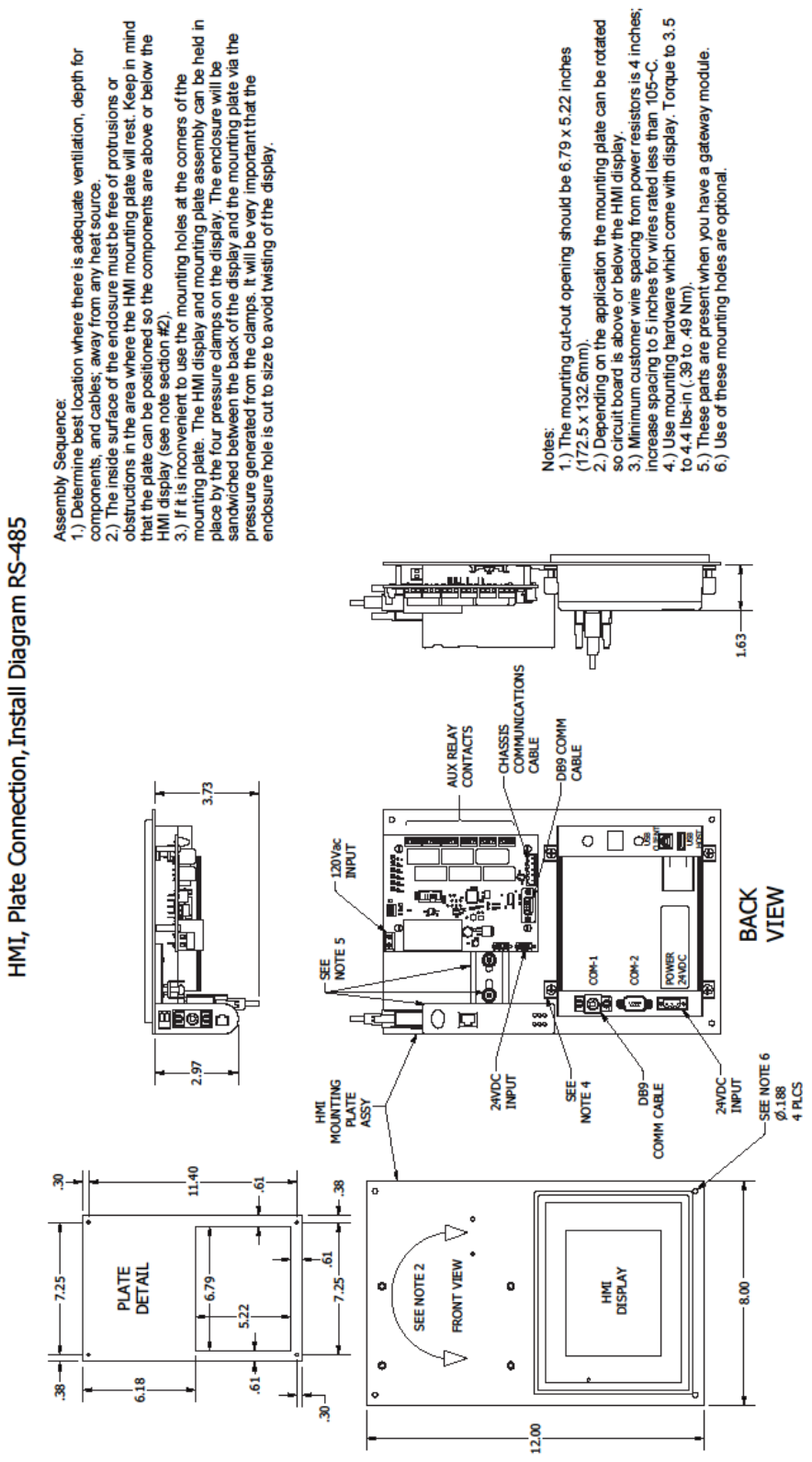

HMI Set-Up Instructions

2) Verify unit external connections

Note: *If unit is configured for load side operation, reference the User Manual for Load Side CT Placement diagram.*

- Phase A, B, C power connection, with positive A-B-C phase rotation expected
- CT H1 Terminal is pointing toward the source
- CT feedback on phases A & C to TB-1
- Leave CT shorting bars in place on TB-1
- With the HGA circuit breaker open, energize the source to the HGA
- Close the HGA circuit breaker
- Fans and HMI should come on in < 5 seconds
- HMI will start on Home screen
- Load(s) have an integral 5% line reactance or equivalent DC bus choke

Warning	Hazardous Voltages are present when unit is energized

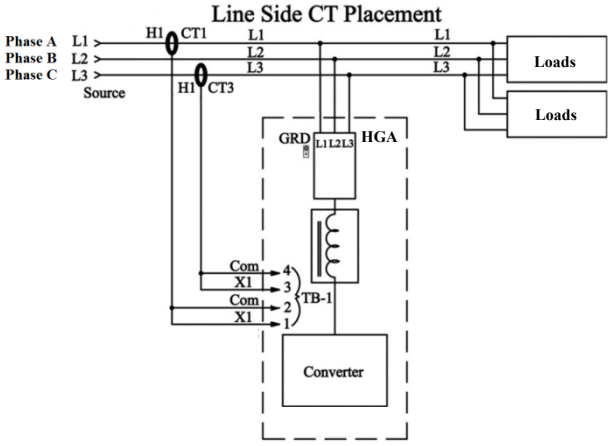

Note: Built-In Sensor Wiring Error Detection

- The active filter has an automatic sensor wiring error detection algorithm built into the controls.
- If a sensor wiring error is detected, please reference the Sensor Error Auto Detection section.

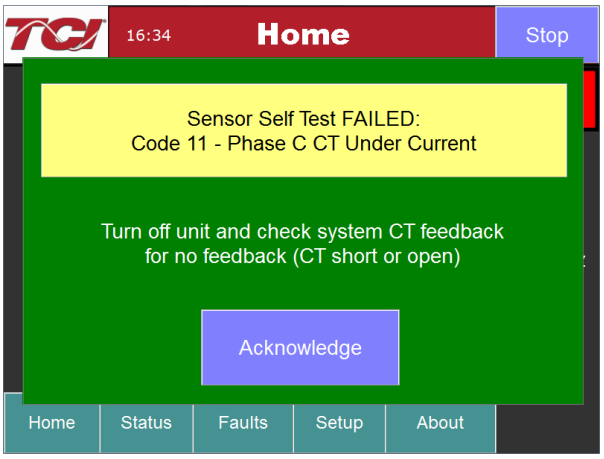

Note: Language Selection and Date / Time

- The active filter supports several languages including English, French and Spanish.
- Press “Setup” to navigate to Setup screen and press the “Language Setup” button.
- Select language setting from the language setup pop-up screen.
- Press the “Set Date and Time” button to change the configured system time.

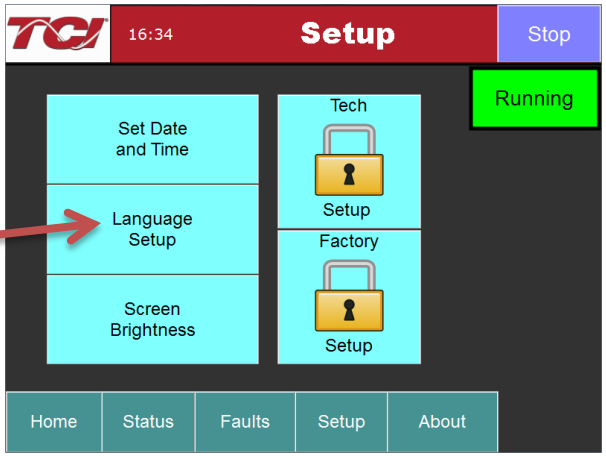

2) Converter check – 1

- Press “Password Setup” to navigate to Setup screen
- Next, select “Tech Setup” and enter the password:

  REDACTED
- Select the “Operation Modes” button

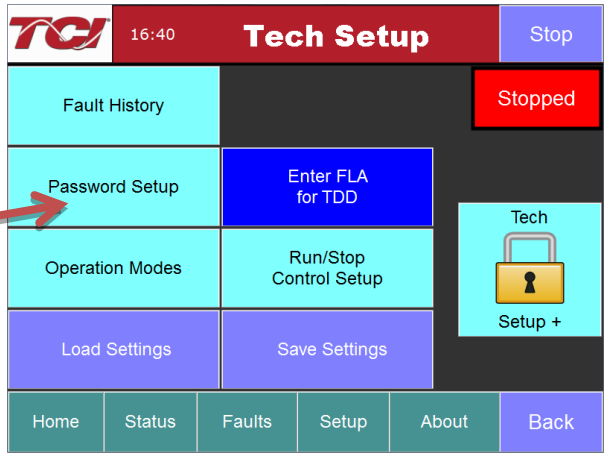

- On the “Operation Mode Setup” screen, ensure “PF Correction Enable” and “Harmonic Correction Enable” buttons are OFF (Blue). If buttons are green, press to toggle off
- Select the “CT Ratio” button and enter CT ratio to match the external current transformers wired to the unit. Select the “Back” button

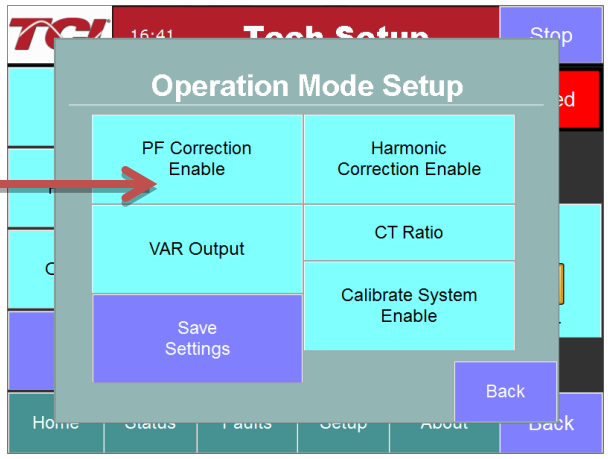

- Next, select the “VAR Output” button and ensure the “Local VAR Output Enable” and “Network VAR Output Enable” are OFF (Blue). If buttons are green, press to toggle off
- Select the “Back” buttons to return to the “Tech Setup” screen

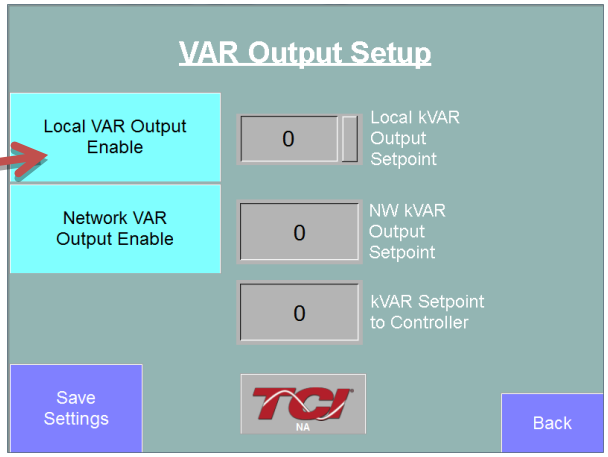

- On this pop-up screen, ensure the “Auto Start Setup” button is OFF (Blue). If button is ON (Green), press to toggle off.

- Navigate back to “Tech Setup” screen
- Now select “Save Settings”
- Press “Home” to navigate to Home screen

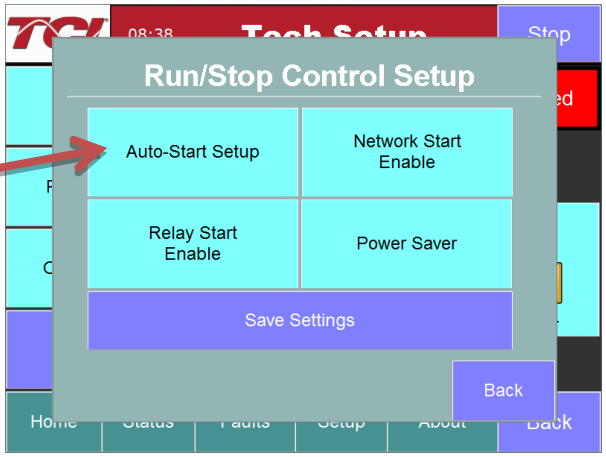

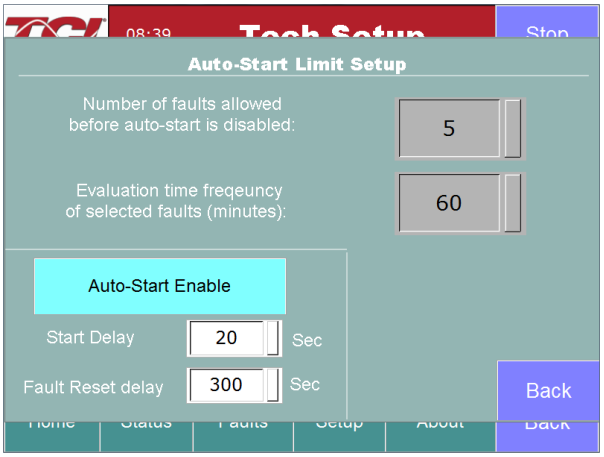

3) Home screen check

- Compare “Freq” to expected line frequency
- Compare “Voltage” to expected line Voltage
- “Current” expected to be zero because unit is not running and CT inputs are shorted
- If status indicates a Fault, press “Stop” button to reset condition

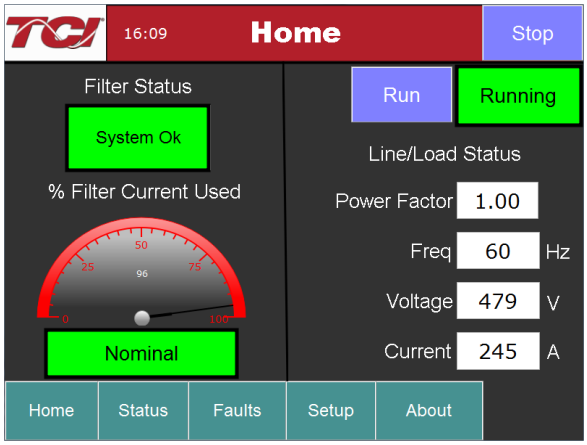

4) Status screen check

Note: *The Line/Load button and Line/Load Current Plot will say "Line" if a master/ line side unit or say "Load" if it is a slave/load side unit.*

- Press "Status" to navigate to Status screen
- Compare "Volts" to expected line Voltage
- Compare "Freq" to expected line frequency
- "Current" expected to be zero if unit is not running and CT inputs are shorted

Line Side Configured Unit

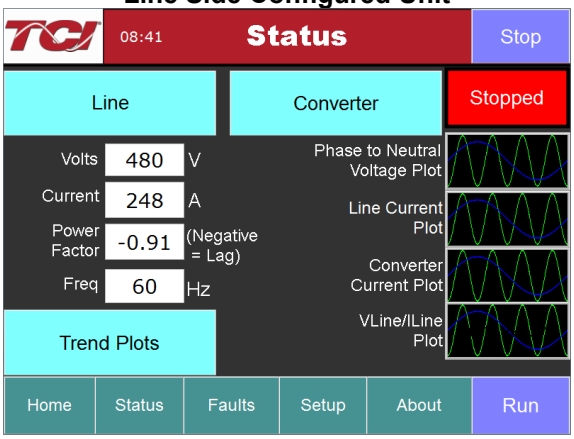

Load Side Configured Unit

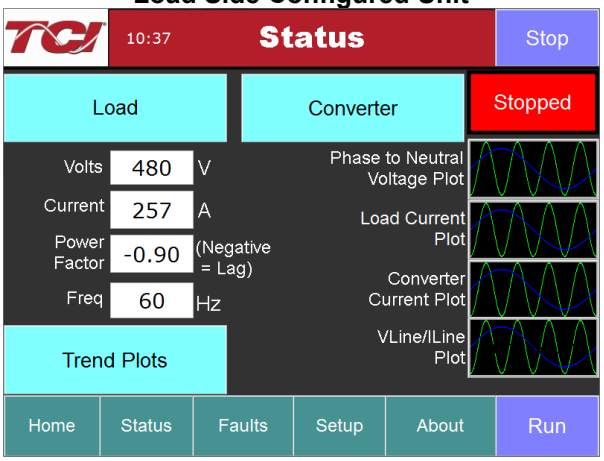

5) Phase rotation check

- Press "Phase to Neutral Voltage Plot" button
- Check that the current peaks follow the following sequence from left to right: Phase A (Green), Phase B (Blue), Phase C (Red)
- Equipment is phase rotation sensitive, if phase rotation is incorrect, power down unit and rewire to adjust phase rotation by swapping two incoming phase connections

Warning	Improper operation will occur if input Voltage phase rotation is incorrect.

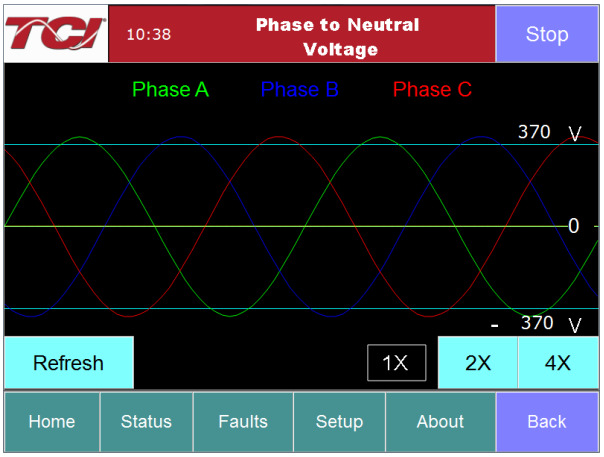

6) Running Converter

Press “Setup” to navigate to the setup screen
Select the “Tech Setup” button and enter the password:

REDACTED

- Select the “Next” button from the splash screen
- Select the “Operation Modes” button
- On the “Operation Mode Setup” screen ensure “PF Correction Enable” and “Harmonic Correction Enable” buttons are OFF (Blue). If buttons are green, press to toggle off TODO and VAR output off.
- Select the “VAR Output” button and ensure the “Local VAR Output Enable” and “Network VAR Output Enable” are OFF (Blue). Select the “Back” buttons to go back to “Tech Setup” screen
- Select the “Home” button from navigation bar
- Select the “Run” button to start unit operation

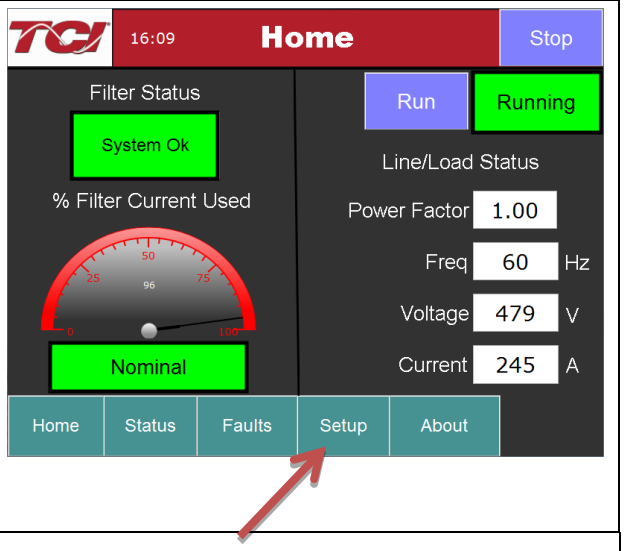

7) Remove CT shorting bars

- Press “Stop” to turn off unit
- Disconnect power from cabinet
- Turn off the built-in door breaker AND
- Turn off the upstream feeder breaker
- Open the cabinet door and remove shorting bars from CTs connected to TB-1

Warning	Lethal Voltages may be present. Wait 5 minutes for DC bus Voltage to drop to safe levels.
Warning	Check for Voltage in cabinet with a DMM before working inside cabinet.

8) Current polarity #1

- Power up unit
- From Home screen, press “Run” to turn on unit
- Press “Status” to navigate to Status screen
- Select “VLine/ILine” screen
- **Note**: Lightly loaded conditions (less than 20% CT rating) will not have enough current to show up on ILine plot
- Check that Phase A to Neutral Voltage peak lines up with Phase A current (use zoom if necessary)
- Check that Phase C to Neutral Voltage peak lines up with Phase C current
- Power system down and check CT installation location and orientation, if Phase A plots differ significantly from Phase C plots

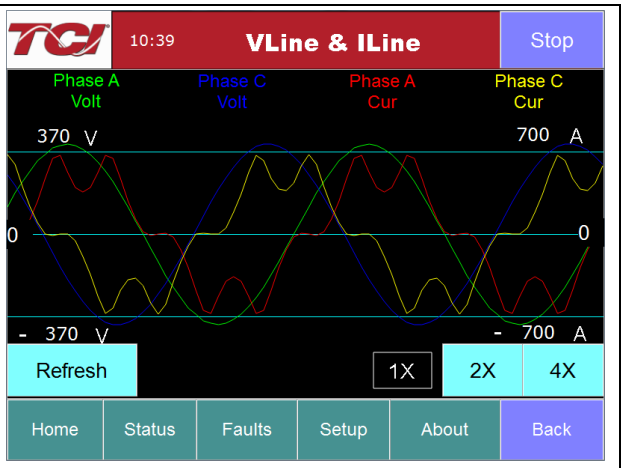

Warning	Open circuit CT outputs can result in high Voltages and damage to equipment.

Warning	Wiring the CT incorrectly can lead to improper operation, which includes unit operating in limit and/or contributing to rather than correcting harmonics.

Note: *If using a Line Side (master) unit, the screen title will say “Line Status” and if using a Load Side (slave) unit, the screen title will say “Load Status”.* ***Also:*** *See notes under each screen.*

9) Current polarity #2

- Navigate to Status screen
- Depending on unit configuration, select either the “Line” or “Load” button
- Verify that the fields match expected values for the power system
- If they do not, verify correct CT installation

Note: *If secondary CT current is less than 1A, THID will be unavailable*

Line Side Configured Unit

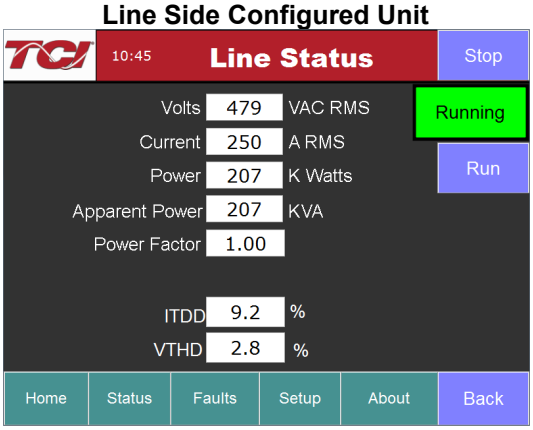

Note: *If system Voltage is less than 480 V, the THVD value will be unavailable. If CT secondary feedback current less than 1 Amp, the THID and THID Ref values will be unavailable.*

Load Side Configured Unit

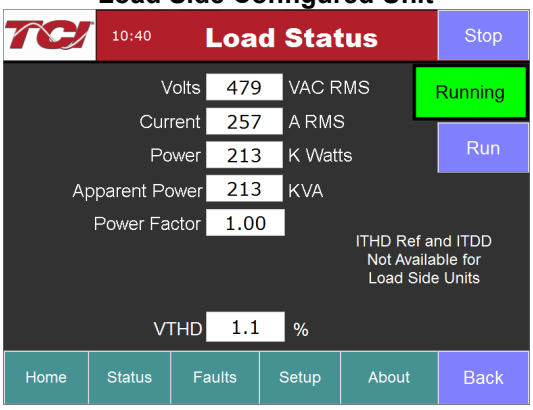

Note: *If system Voltage is less than 480 V, the THVD value will be unavailable. Load Side units do not report ITDD or THID Ref values. If CT secondary feedback current less than 1 Amp, the THID value will be unavailable.*

10) Final setup

- Press “Setup” to navigate to setup screen
- Select the “Tech Setup” button and enter the password:

  REDACTED
- Select the next button from the splash screen
- Select the “Operation Modes” button

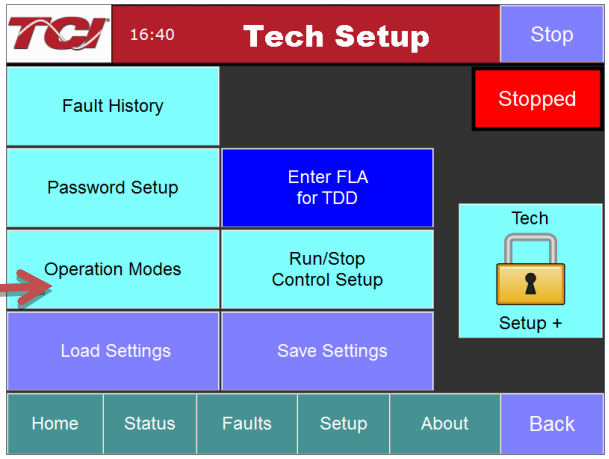

- On the “Operation Mode Setup” screen select the “Harmonic Correction Enable” button and ensure the button is ON (Green)

Note: *If unit is sized with sufficient capacity to provide power factor correction, select the “PF Correction Enable” button and ensure the button is ON (Green)*

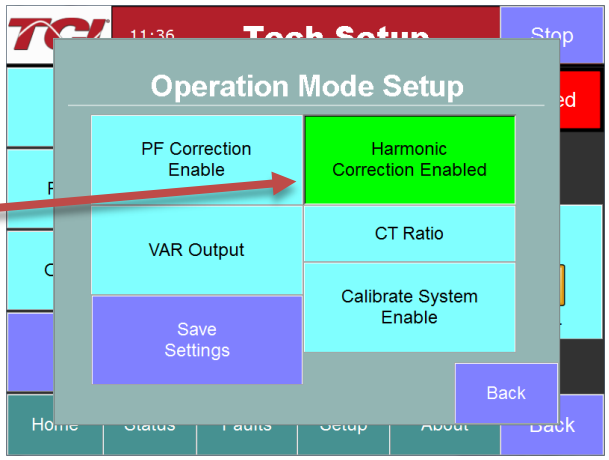

- Select the “CT Ratio” button and confirm the configured CT ratio matches the external current transformers that are wired to the unit
- Select the “Back” button and then from “Tech Setup” screen, select “Run/Stop Control Setup”

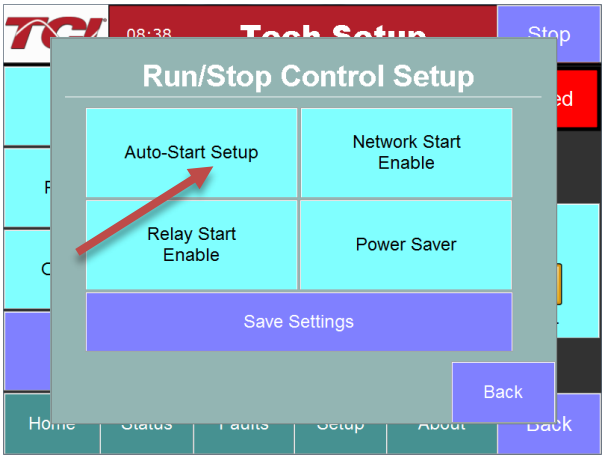

- Select “Auto-Start Setup”
- On this screen, select the “Auto-Start Enable” button and ensure the button is ON (Green)
- Navigate back to the “Tech Setup” screen and select the “Save Settings” button
- Navigate to the “Home” screen and press the Run button. The unit will start to operate. With the Auto-Start option enabled, the units will now automatically restart after future power on/off cycles of the unit or non-critical system faults

Warning	When Auto Start is enabled, unit may operate without operator input.

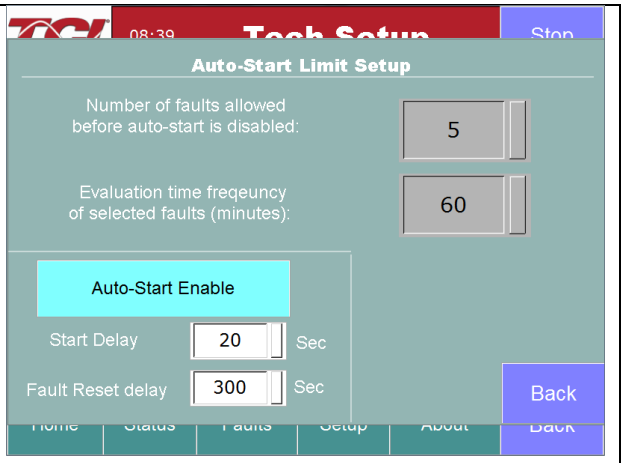

11) Final check

Note: *If unit is configured for load side operation, reference the User Manual for Load Side CT Placement diagram.*

- Navigate to the Status screen
- Navigate to Line/Load status
- Note the corrected Voltage, current, power and THD

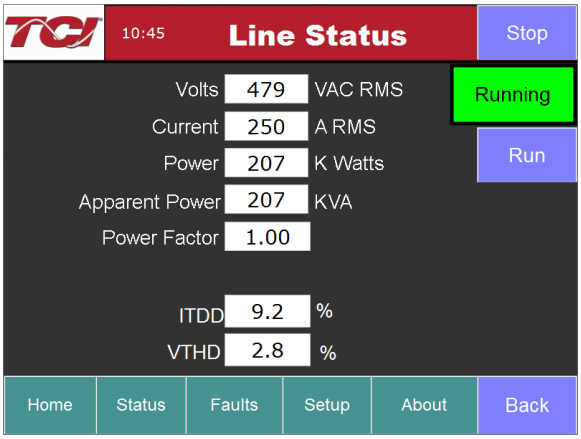

Line Side

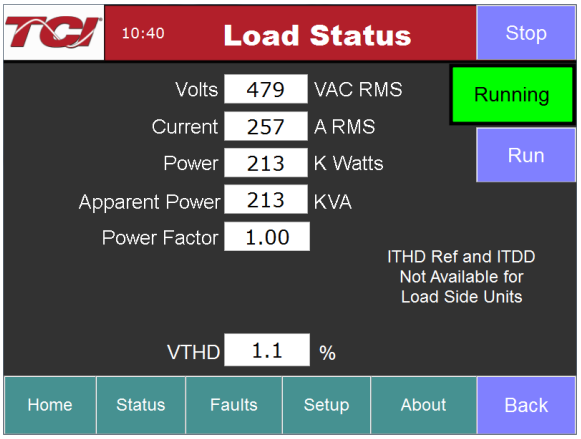

Load Side

HMI Screens

Home Screen

The Home screen displays a dashboard of overall filter status information and allows the user to run and stop the HarmonicGuard® Active filter.

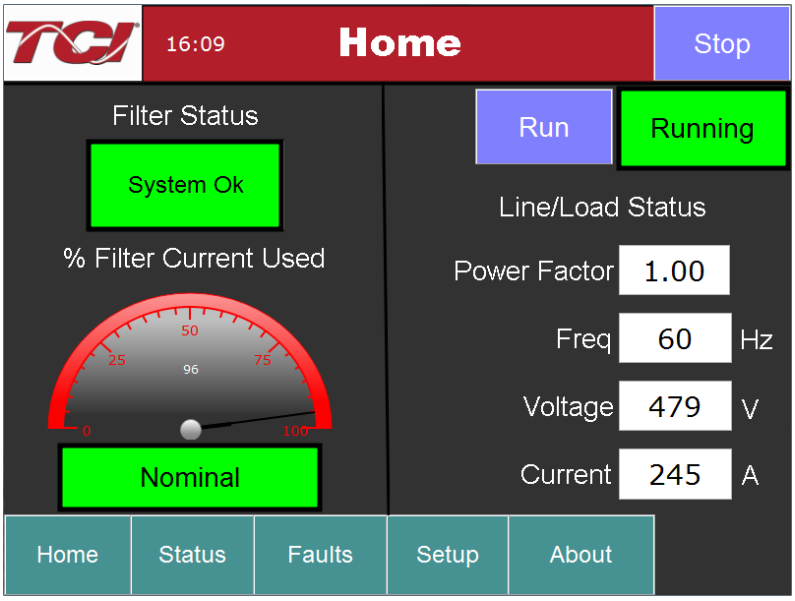

Figure 35: Home Screen

Table 22: Home Screen Elements

Screen Element	Description
Filter Status Display	Indicates if a converter fault is active and preventing the HarmonicGuard® Active filter from running. If a fault occurs, the indicator will flash red and display “Fault”. Specific Fault codes can be viewed on the “Fault” Screen.
% Filter Current Used Display	This gauge displays the current filter capacity as a percentage of total available capacity. In normal operation, the display will read “Nominal”. If the unit output corrective current is above 95% of maximum capacity, the indicator light will turn red and display “At Capacity”. When the converter is at capacity, the Relay K4 (J12 Connector), and J11 Contacts used for a remote indicator will also be energized. If the monitor continually displays “At Capacity”, a second filter may be required to handle the load. Please contact TCI for assistance.
Run/Stop Button	Runs and stops the HarmonicGuard® Active filter.
System State Indicator (located immediately below stop button)	When the HarmonicGuard® Active filter is in a stop mode, the “Status” light will turn red and display “Stopped”. When the converter is running, the status light will be green and will display “Running”. The status light will also show if the HarmonicGuard® Active filter is in Input line Sync mode, Reset mode, Precharge mode, Calibrate mode, Power Save mode or Faulted. When the HarmonicGuard® Active filter is faulted, it will shut down automatically.
Power Factor Display	Displays current line/load power factor. 1.00 indicates unity power factor. A negative power factor indicates lagging power factor.
Line Frequency Display	Displays the current utility line frequency in Hz.
Supply Voltage	Displays the supply Voltage coming into the HarmonicGuard® Active filter.
Line/Load Current Display	Displays the current line/load phase current in Amps RMS. ***Note:*** *The displayed current is affected by the CT Ratio configuration on the “Setup” page.*

Status Screen

The Status screen shows more specific information on the performance of the system, such as current and Voltage waveforms, Power Factor and information specific to the Line/Load screen and Converter screen.

Note: *The Status Screen will indicate if unit is Line Side/Load Side. The "Line/Load" button and the "Line/Load Current Plot" text changes to show Line or Load status.*

The figure below explains the main "Status" screen.

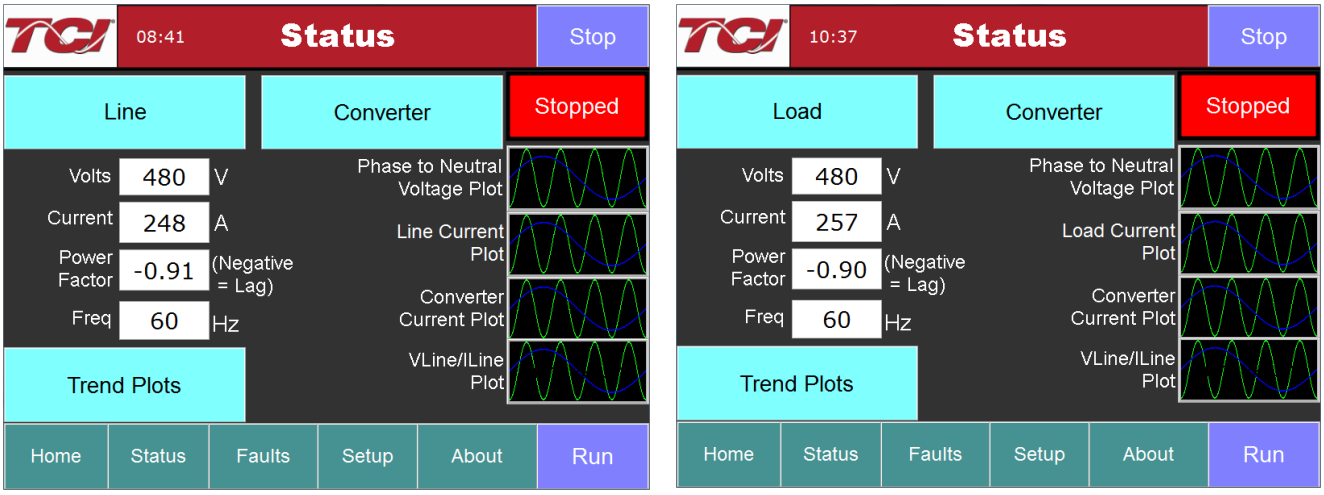

Line Side **Load Side**

Note: *The Status Screen will indicate if unit is Line Side/Load Side. The "Line/Load" button and the "Line/Load Current Plot" text changes to show Line or Load status.*

Figure 36: Status Screen

Table 23: Status Screen Elements

Screen Element	Description
Line/Load Button	Use this button to get to the "Line/Load Status" Sub Screen
Volts Display	Displays the current utility phase to phase line Voltage in Volts RMS.
Current Display	Displays the current line/load phase current in Amps RMS.
Power Factor Display	Displays current line/load power factor. A value of 1.00 indicates unity power factor. A negative power factor indicates lagging power factor.
Frequency Display	Displays the current utility line frequency in Hz.
Run/Stop Button	Runs and stops the HarmonicGuard® Active filter.
Converter Button	This button will take the user to the "Converter Status" Sub Screen.

Phase to Neutral Voltage, Line Voltage, Line/Load Current, Converter Current, and VLine/ILine Waveform Screens	The “Waveform” screen buttons will take the user to one of the four real-time waveform capture screens: Phase to Neutral Voltage, Line Voltage, Line Current, Converter current, or VLine/ILine plot.
Trend Plots Screen	When the user presses the “Trend Plots” button, the Historical Trend screen menu is displayed.

Converter Status Sub-Screen

The converter status sub screen shows the present status of the HarmonicGuard® Active filter power converter module.

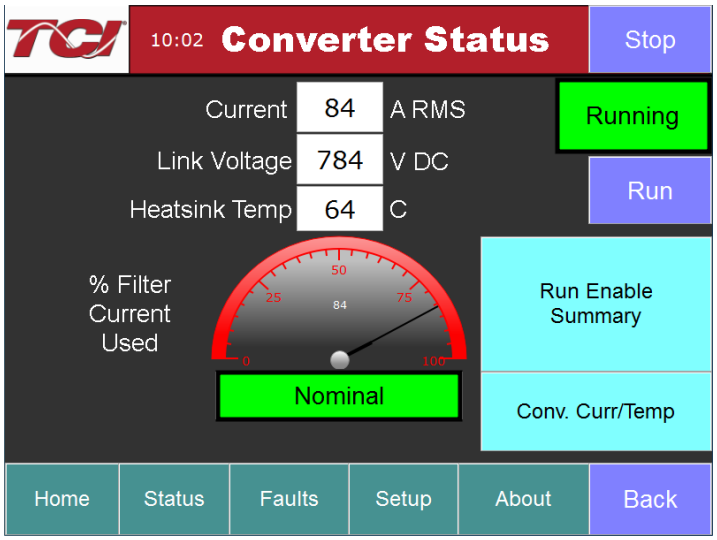

Figure 37: Converter Status Sub Screen

Table 24: Converter Status Screen Elements

Screen Element	Description
Run/Stop Button	Runs and stops the HarmonicGuard® Active filter.
Current Display	Displays the present HarmonicGuard® Active filter output corrective current in Amps RMS.
Link Voltage Display	Displays the internal DC Link Bus Voltage of the HarmonicGuard® Active filter in Volts DC.
Heatsink Temp Display	Displays the present HarmonicGuard® Active filter power converter heat sink temperature in Degrees Celsius.
% Filter Current Used Display	This gauge displays the current filter capacity as a percentage of total available capacity. In normal operation, the display will read “Nominal”. If the unit output corrective current is above 95% of maximum capacity, the indicator light will turn red and display “At Capacity”. When the converter is at capacity the Relay K4 (J12 Connector), and J11 Contacts used for a remote indicator will also be energized. If the monitor continually displays “At Capacity”, a second filter may be required to handle the load. Please contact TCI for assistance.
Run Enable Summary	Displays the current state of all enables that affect the running of the HarmonicGuard® Active filter. If a button is red, that option is disabled and if it is green, that option is enabled. If the “Auto Start” is enabled, a countdown timer will run to the right of the button, when the count reaches 0 the converter will start.
Conv. Curr/Temp Button	Displays current and temperature levels for each individual converter in the unit.
Back Button	Returns user to the main status screen.

Run Enable Summary Sub-Screen

The Run Enable Summary sub screen shows state of all the enables that affect the running of the HarmonicGuard® Active filter.

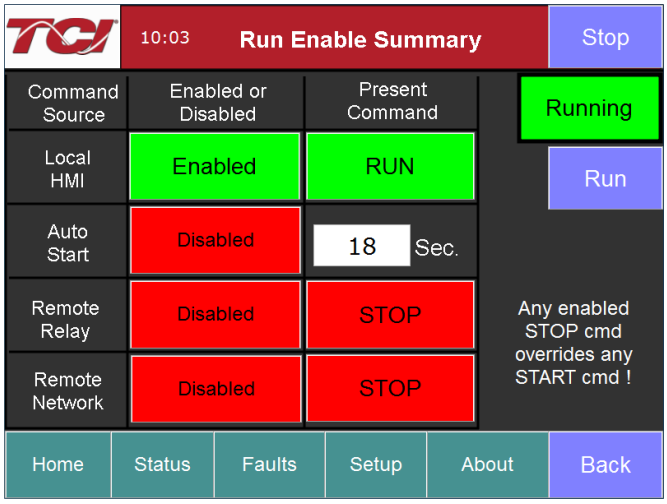

Figure 38: Run Enable Summary Screen (RUN)

When the HMI Stop button is pressed locally on the HMI, the unit enters a Run Inhibit state and will show a “Run Inhibit Active” message on the Run Enable Summary Screen center right. When the Run Inhibit is Active, the unit will not be allowed to start remotely via a Network start, Remote relay start, or Auto-start command. The Run Inhibit is cleared by pressing the HMI Run button locally on the HMI display.

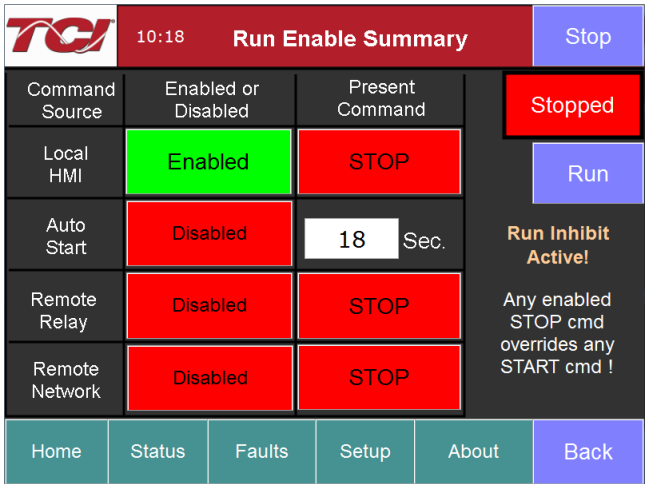

Figure 39: Run Enable Summary Screen (STOP)

Table 25: Run Enable Summary Sub Screen Elements

Screen Element	Description
Run/Stop Button	Runs and stops the HarmonicGuard® Active filter.
Local HMI	This option is always enabled. The “Present Command” field will be green and say RUN, if the local HMI run button has been pressed and the unit is operational. It will be red and say STOP, if the unit is stopped locally or in the Run Inhibit state.
Auto Start	Changes to green, if enabled and the countdown timer (to the right of the button) will start. When it reaches 0, the HarmonicGuard® Active filter will start.
Remote Relay	Changes to green, if enabled. If enabled the HarmonicGuard® Active filter can be remotely turned on with a contact closure.
Remote Network	Changes to green, if enabled. If enabled, the HarmonicGuard® Active filter can be remotely stopped/started with a contact closure. When the contact is closed, the unit will run and when opened the unit will stop. When enabled and the option is active, the field to the right will be green and read “RUN”.
Back	This button will take you back to the converter status screen.

Converter Current/Temperature Sub-Screen

The Converter Current/Temperature screen displays the current and temperature levels for each individual converter that is present in the unit. These values are represented as “Converter Current” and “Converter Temperature” throughout the HMI.

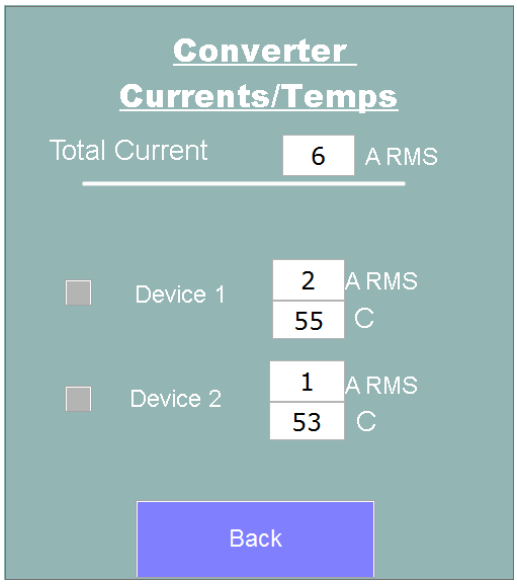

Figure 40: Converter Current/Temperature Screen

Line/Load Status Sub-Screen

The Line/Load Status Sub Screen shows more specific information regarding the source or Load Voltage, Current, Power, Power Factor and THD measurements.

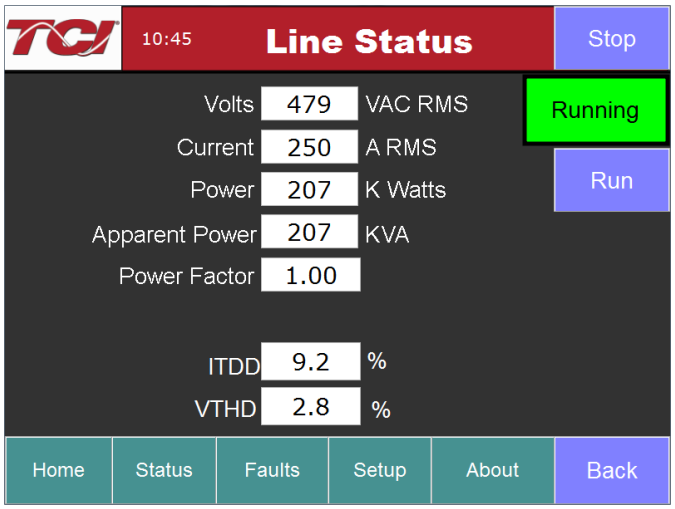

Figure 41: Line Status Sub Screen

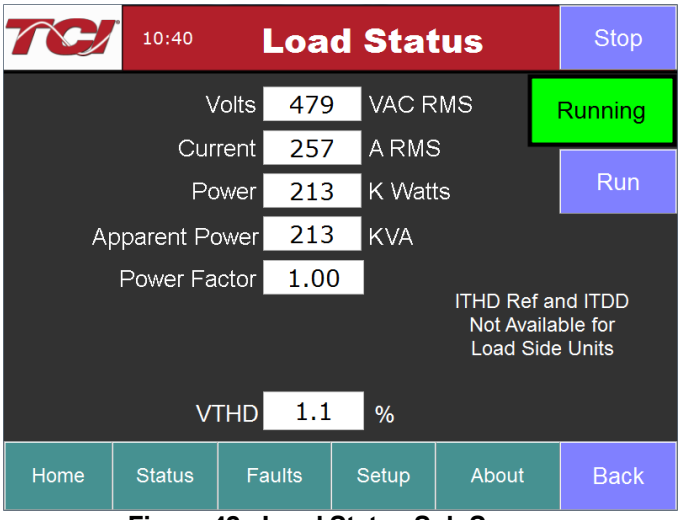

Figure 42: Load Status Sub Screen

Table 26: Line/Load Status Screen Elements

Screen Element	Description
Volts Display	Displays the current utility phase to phase line Voltage in Volts RMS.
Current Display	Displays the current line/load phase current in Amps RMS. ***Note:*** *The displayed current is affected by the CT Ratio configuration on the "Setup" page.*
Power Display	The 3-phase real power (P) of the line/load in kW.
Apparent Power Display	The 3-phase apparent power (S) of the line/load in kVA.
Power Factor Display	Displays current line/load power factor. 1.00 indicates unity power factor. A negative power factor indicates lagging power factor.
I THD Display	Displays the Total Harmonic Distortion of the utility Line/Load current as a percentage ***Note****: If secondary CT current is less than 1A, THID and THID Ref will be unavailable*
V THD Display	Displays the Total Harmonic Distortion of the utility line Voltage as a percentage.
I THD Ref Display	Displays the reference Total Harmonic Distortion of the utility Line current in a percentage. This THD display is the uncorrected THD of the Line taken when the HarmonicGuard® Active filter was not running. ***Note:*** *For load side configured units, I THD Reference and I TDD displays are not available* ***Note:*** *If secondary CT current is less than 1A, THID and THID Ref will be unavailable*
I TDD Display	Displays the Total Demand Distortion of the utility. By default, this is calculated based on CT Ratio, but can be adjusted by entering the system Full Load Amps (FLA) on the "Tech Setup" screen. See the "Tech Setup Screen" section below
Run/Stop Button	Runs and stops the HarmonicGuard® Active filter.
Back Button	Returns user to the main Status Screen.

Waveform Plot Sub-Screens

The HMI display supports capture and display of real time system Voltage and current data. 3-phase waveform data can be viewed for Line Voltage, Line/Load Current, and Converter Corrective Current.

The waveform screens contain a zoom feature, which supports three magnitude scales: 1X, 2X and 4X (see Figure 42). The Refresh button on the waveform screens will update the plot with new data from the HarmonicGuard® Active filter converter.

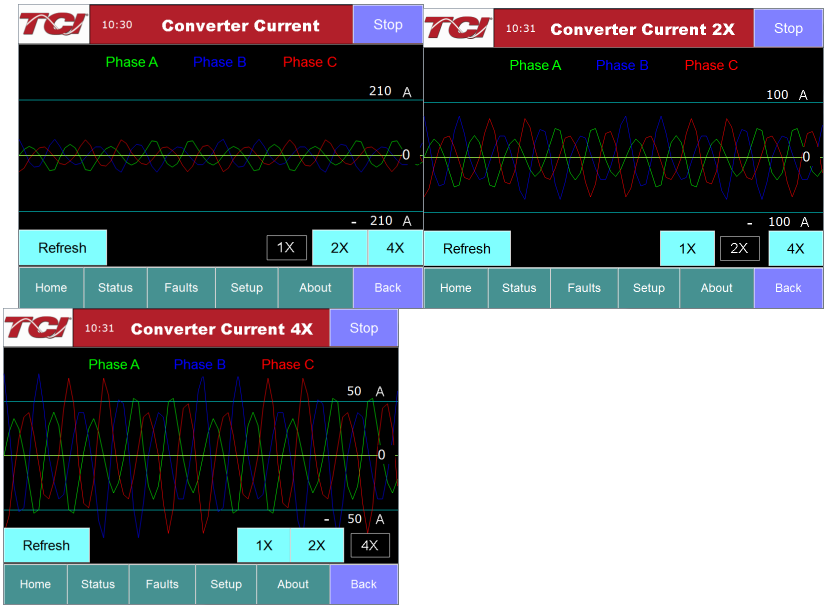

Figure 43: Example Waveform Plot Screens (Converter Corrective Current)

Table 27: Waveform Plot Sub Screen Elements

Screen Element	Description
Refresh Button	The “Refresh” button will reload the data from the HarmonicGuard® Active filter power converter controller and redraw the waveform plot.
1X, 2X, and 4X Buttons	Waveform zoom buttons will redraw the present data at a different scale.

VLine & ILine Waveform Plot Sub-Screen

The VLine & ILine Waveform Plot Sub Screen is available to verify the proper installation of the HarmonicGuard® Active filter power connections and system current CT feedbacks. The waveform plot shows Voltage and current feedback for both Phase A and C on the same plot. When the HarmonicGuard® Active filter is powered, but in the stopped state this plot can be used to check for the following:

- Proper Line Voltage phase rotation.
- Proper Line/Load Current phase rotation.
- Proper Line Voltage and Line/Load Current relative polarity and phase.
- Missing/Open Circuit System Current CT Feedback.

If the HarmonicGuard® Active filter performance is degraded, the VLine & ILine waveform plot should be examined to determine if any system connection errors are present. Prior to examining the VLine & ILine waveform plot, the HarmonicGuard® Active filter should be put in the stopped state by pressing the stop button in the upper right corner of the HMI screen. Figure 43 shows the VLine & ILine waveform plot sub screen for a properly connected, but non-running HarmonicGuard® Active filter when connected to a typical non-linear, rectifier load. Note the following characteristics:

- Phase C Voltage (Blue) leads Phase A Voltage (Green).
- Phase C current (Yellow) leads Phase A current (Red).
- Phase A Voltage (Green) and Phase A current (Red) are in phase and the same polarity.

- Phase C Voltage (Blue) and Phase C current (Yellow) are in phase and the same polarity.

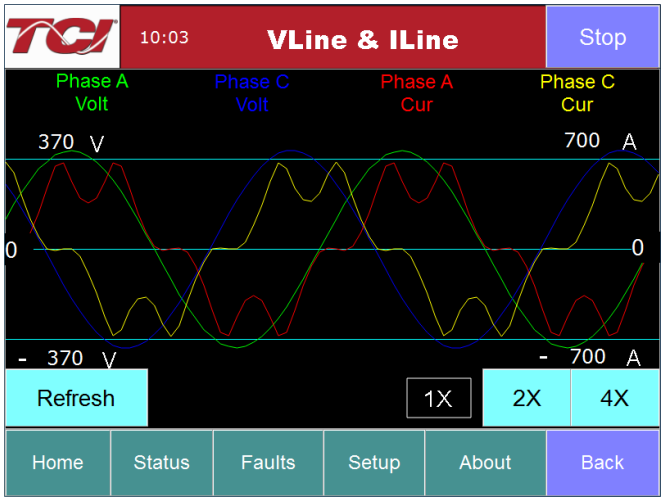

Figure 44: VLine & ILine Waveform Plot of a Properly Connected HarmonicGuard® Active filter (unit in stopped state)

Note: *The example VLine & ILine Waveform Plot screens apply to rectifier loads only. For low power factor loads, the VLine & ILine waveform screen will appear different.*

The table below shows what the VLine & ILine Waveform Plot Sub Screen would look like with various connection errors present in the system.

Table 28: VLine & ILine Waveform Plot Screen Examples when Typical Connection Errors Present in System

VLine & ILine Waveform Plot Sub Screen with Rectifier Load	Connection Error Description	Connection Error Resolution
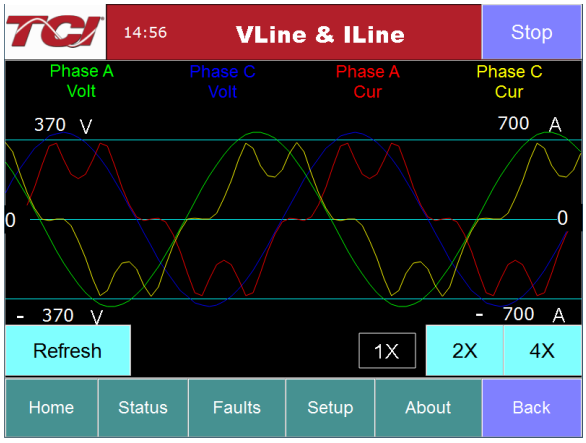	Phase rotation is Incorrect: Phase A leads Phase C instead of Phase C leading Phase A.	To correct, swap Phase A and Phase C HarmonicGuard® Active filter power connections AND swap Phase A and Phase C system CT current feedback then recheck plot.

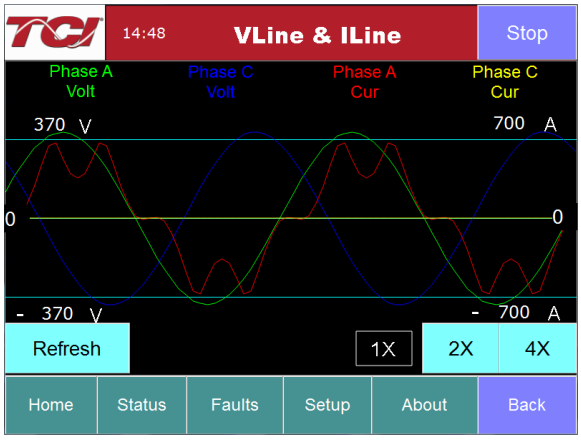	Phase C system CT current feedback missing: Phase C current is zero while Phase A current is present.	Check Phase C CT for open circuit or loose connection.
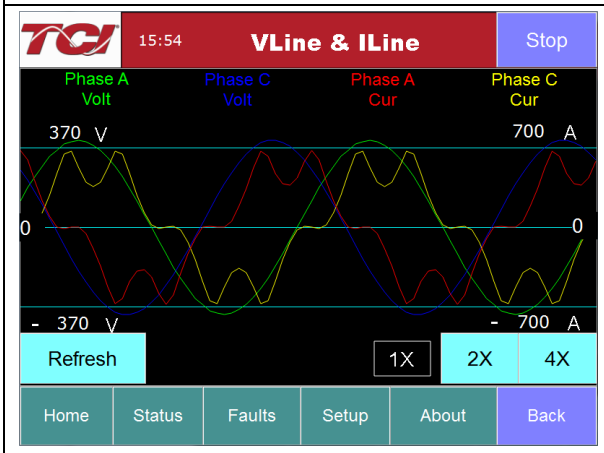	Phase A and Phase C CT current feedback swapped: Phase A current (red) in phase with Phase C Voltage (blue), instead of Phase A Voltage (green).	To correct, swap Phase A and Phase C system CT current feedback and recheck plot.
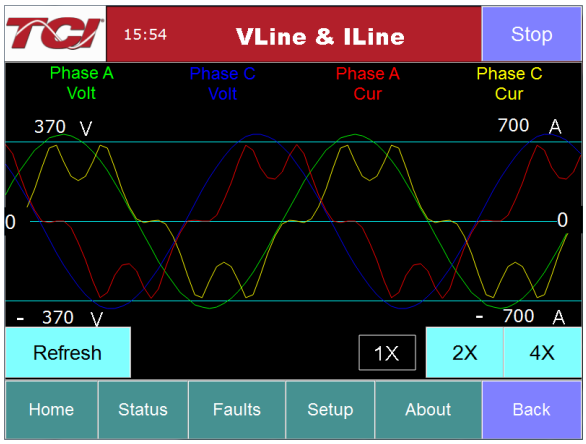	Phase A current (red) is opposite polarity of Phase A Voltage (green) and Phase C current (yellow) is opposite polarity of Phase C Voltage (blue).	To correct, re-install both Phase A and Phase C system CTs with polarity arrow in opposite direction OR swap positive and negative connections of each CT at HGA filter terminal block then recheck plot.

Historical Trend Plot Menu Sub-Screen

From the historical trend plot menu sub screen, the trend graphs of various HarmonicGuard® Active filter system signals can be viewed.

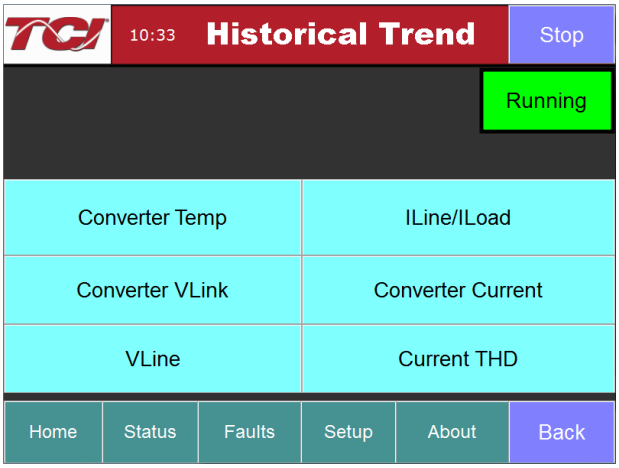

Figure 45: Historical Trend Plot Menu Sub Screen

Table 29: Historical Trend Plot Menu Sub Screen Elements

Screen Element	Description
Converter Temp Button	Opens the HarmonicGuard® Active filter heatsink temperature historical trend graph screen. This signal is sampled every 15 seconds and historical data is maintained for 10 hours.
Converter VLink Button	Opens the HarmonicGuard® Active filter DC Link Voltage historical trend graph screen. This signal is sampled every 3 seconds and 2 hours of historical data is maintained.
VLine Button	Opens the utility input RMS Voltage historical trend graph screen. This signal is sampled every 3 seconds and 2 hours of historical data is maintained.
ILine/ILoad Button	Opens the line/load RMS current historical trend graph screen. This signal is sampled every 3 seconds and historical data is maintained for 2 hours.
Converter Current Button	Opens the HarmonicGuard® Active filter RMS current historical trend graph screen. This signal is sampled every 3 seconds and 2 hours of historical data is maintained.
Current THD Button	Opens the line/load Total Harmonic Distortion historical trend graph screen. This signal is sampled every 3 seconds and 2 hours of historical data is maintained.

Historical Trend Plot Sub Screens

The historical trend plot screens graph time-stamped feedback data over an extended period. Once the trend plot display data buffer is full, the oldest data is overwritten. Historical data can be viewed using the integrated scroll bars of the trend plot. All trend plot data is maintained between power on/off cycles of the HarmonicGuard® Active filter. See figure below for an example of a typical trend graph (trend plot example is for the HarmonicGuard® Active filter power converter heatsink temperature measurement).

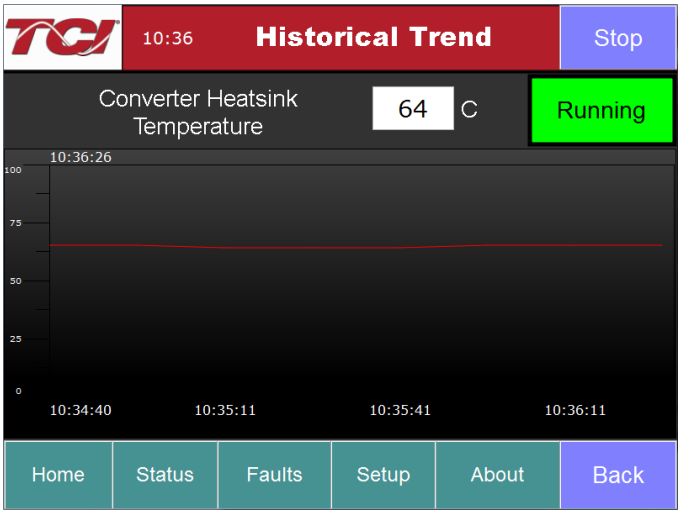

Figure 46: Example Historical Trend Plot Sub Screen

Table 30: Trend Plot Screen Elements

Screen Element	Description
Run/Stop Button	Runs and stops the HarmonicGuard® Active filter.
Plot Scale Display (located on the left side of the graph)	Indicates the magnitude of the samples of the trend plot. The scale varies with each of the trend plots.
Right Timestamp	Indicates the date and time the right-most sample displayed on the screen was taken.
Left Timestamp	Indicates the date and time the left-most sample displayed on the screen was taken.
Scroll Bar	Allows the user to scroll through all sample points available in the trend plot data buffer.
Trend Plot Display	The historical graph of the value being sampled over time.

Fault Screen

This button takes the user to the “Active Fault” screen. See figure below, which lists all the active faults. The faults will stay in this list until the “Reset”, or “Stop” button is pressed or the fault self clears. The “Fault History” screen can also be viewed here.

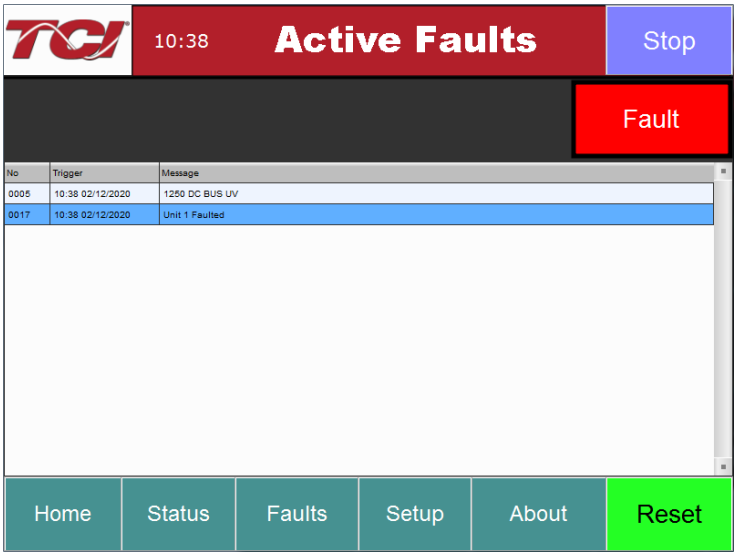

Figure 47: Fault Screen

Table 31: Fault Screen Elements

Screen Element	Description
Stop Button	Turns off the HarmonicGuard® Active filter.
Reset Button	This button will remove all faults from the list, if the fault conditions have cleared. Once cleared, a fault will still be viewable in the fault history log.
Fault Trip Entry Display	When a fault occurs, the fault screen will display information about the fault including the (from left to right across the screen): Fault bit mask number Fault timestamp Fault code Fault description
History Button	This button will take the user to the “Fault History” sub screen, where previous faults can be reviewed.

Table 32: Fault Codes

Fault Code	Critical or Non-critical Fault	Auto or Manual Reset	Fault Description
10	Critical	Manual*	Desaturation - Hardware Phase A
11	Critical	Manual*	Desaturation - Hardware Phase B
12	Critical	Manual*	Desaturation - Hardware Phase C
920	Non-critical	Auto	Internal CPU Fault 1
921	Non-critical	Auto	Internal CPU Fault 2
922	Non-critical	Auto	Internal CPU Fault 3
923	Non-critical	Auto	Internal CPU Fault 4
950	Non-critical	Auto	Invalid Setpoint Configuration
1000	Non-critical	Auto	DC Bus Overvoltage - Overall
1001	Non-critical	Auto	DC Bus Overvoltage - Lower
1250	Non-critical	Auto	DC Bus Undervoltage - Overall
1251	Non-critical	Auto	DC Bus Overvoltage - Lower
3000	Non-critical	Auto	Overcurrent - Phase A
3010	Non-critical	Auto	Overcurrent - Phase B
3020	Non-critical	Auto	Overcurrent - Phase C
4000	Non-critical	Auto	Over Temperature - Phase A
4010	Non-critical	Auto	Over Temperature - Phase B
4020	Non-critical	Auto	Over Temperature - Phase C
4250	Non-critical	Auto	Under temperature - Phase A
4260	Non-critical	Auto	Under temperature - Phase B
4270	Non-critical	Auto	Under temperature - Phase C
4500	Non-critical	Auto	Exhaust Over Temperature
7000	Non-critical	Auto	Calibration Fault
7010	Non-critical	Auto	Communications Fault
7050	Critical	Manual*	Auto-start Restart Limit Exceeded
Unit N Faulted	Non-critical	Auto	Fault location indication. Fault originated in Unit N where N is in the range 1 to 8. For factory configured parallel systems, the unit numbers are sequential ordered from left to right when looking at the front of the system. Unit 1 is the left most unit in the system.

*Critical faults flagged with a manual reset require an HMI stop button or run/stop switch stop command at the unit to clear.

Fault History Sub Screen

The “Fault History” sub screen contains up to 120 entries that mark the onset and clearing of system faults. At the onset of a fault condition, an entry will be generated in the fault history marked with an “O” on the left side of the fault entry. When a fault clears, an entry will be generated in the fault history marked with an “X” on the left side of the fault entry.

The Fault History persists through power on/off cycles. In the event the fault history log exceeds the max number of 120 entries, the oldest entry will be overwritten by new entries.

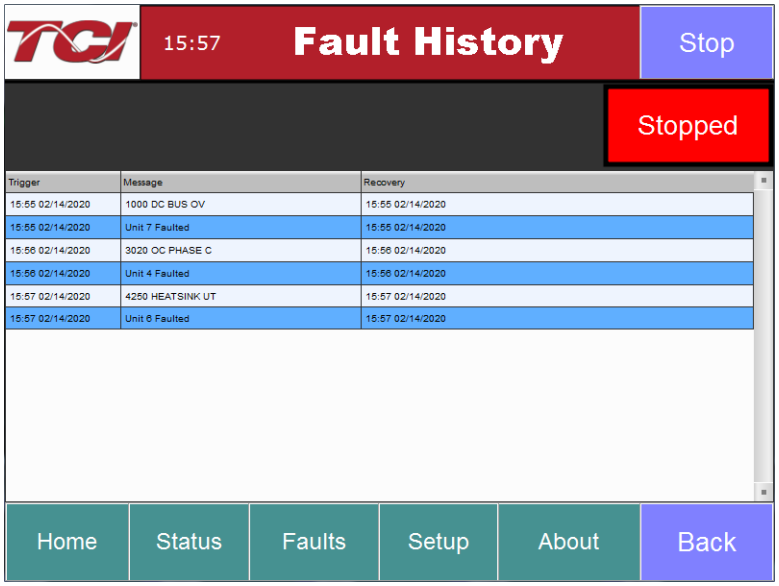

Figure 48: Fault History Sub Screen

Table 33: Fault History

Column (from left to right)	Format	Description
Onset/Clear Marker	O = Fault Onset X = Fault Cleared	Marks the start and end of a fault in the fault history.
Timestamp	HH:MM MM/DD/YYYY	Time and date the fault entry was logged.
Fault Code	Four-digit code	Fault code (See Table 32)
Fault Description	Text	A short text description of the fault.

Setup Screen

Note: *Some set-up screens are password protected to prevent changes that could damage the filter.*

When the user presses the “Setup” button, a screen will appear where the Date, Time, Language, and Screen Brightness can be selected.

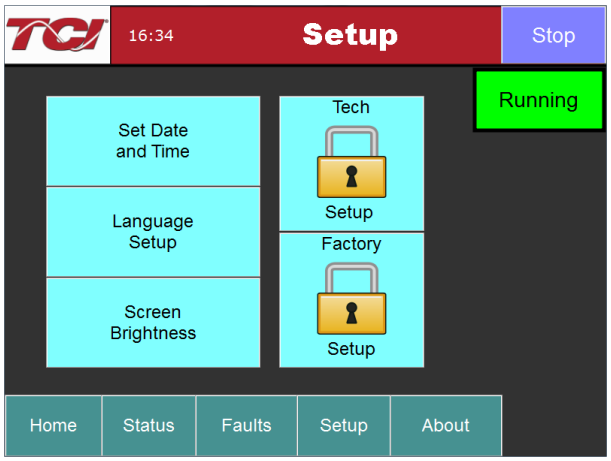

Figure 49: Setup screen

Table 34: Setup Screen Elements

Screen Element	Description
Set Date and Time	Presents a sub screen, which allows the user to change the date and time displayed on the screen. The date and time are also used for time stamps in the fault history and historical trend plots.
Language Setup	Allows user to select Language (English, Spanish, French)
Screen Brightness	This option allows the user to change the brightness of the display. The contrast control is not enabled in this display model. 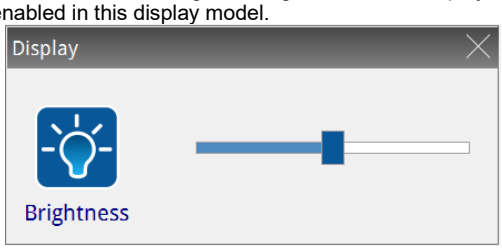 ***Note:*** *Screen is designed to be viewed at chest level.*
Tech Setup	This button is password protected. Takes user to "Tech Setup" screen. Outline to follow.
Factory Setup	This button is password protected and used during the factory and TCI technician setup only.

Tech Setup Screen

To continue to the Tech Setup page, select the "Tech Setup" button and enter the Tech Password: **REDACTED.** Next, a splash screen will appear saying "The Filter is about to stop" Choosing "Next" will stop the filter and take the user to the "Tech Setup" screen. Pressing the "Back" button returns the user to the "Home" screen and does not turn off the filter. If the filter is off, this splash screen will not appear.

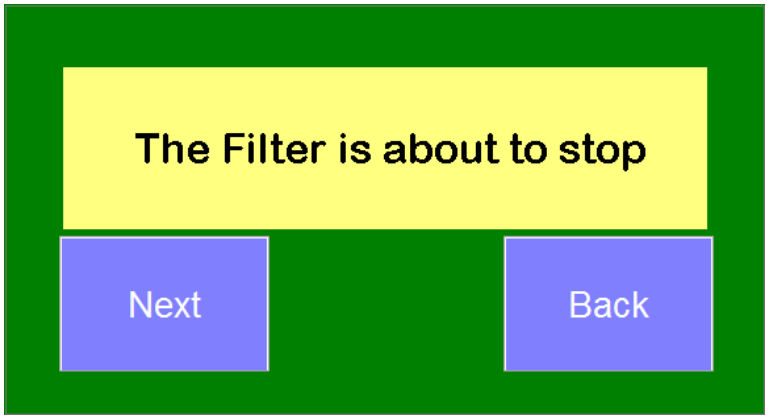

Figure 50: Setup Transition Sub Screen

The Tech Setup Screen allows basic configuration of the HarmonicGuard® Active filter operation.

Note: *It is recommended that the new settings are saved when changes are made. See the description of the "Save Settings" button in Table 35.*

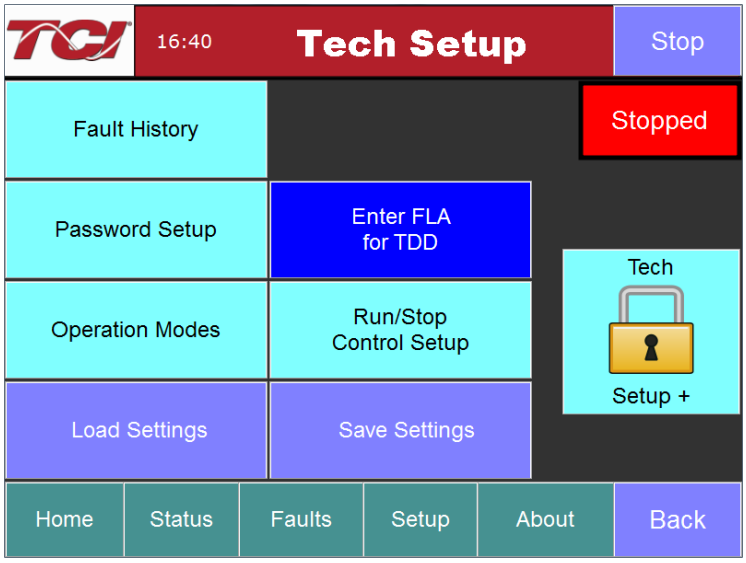

Figure 51: Tech Setup Screen

Table 35: Tech Setup Screen Elements

Screen Element	Description
Operation Modes	Takes user to “Operation Mode Setup” screen. This screen is outlined below
Password Setup	This button is password protected. Takes user to pop-up screen where passwords can be re-configured.
Run/Stop Control Setup	Takes user to “Run/Stop Control Setup” sub screen. Outline to follow.
Load Settings	This button will restore the user saved settings from non-volatile persistent memory. A confirmation screen will pop up asking “Are you sure you want to load saved settings”. If “Yes” is chosen, any temporary changes made to the working set point parameters will be lost and the user saved settings will be restored. If “No” is pressed, the user will be sent back at the “Basic Setup” screen. 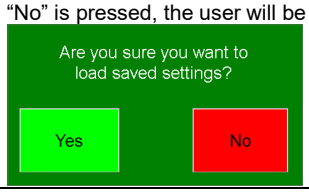
Save Settings	This button will save the current working settings to non-volatile memory that persist when power is removed from the unit. To save the current settings, choose “Yes” on the confirmation screen, or choose “No” to cancel and go back to the “Basic Setup”. The settings will not be saved if “No” is chosen. 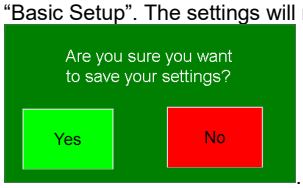
Tech Setup +	The password protected Tech Setup + button opens application specific setup screens for advanced configuration of the active filter. Access to this HMI screen is not needed for basic system installation and commissioning. If a specialized setup feature is required for your application, an authorized TCI field service representative will provide instruction on those features.
Full Load Amps Entry	This button allows user to enter in the system full load amps rating and is used to calculate the ITDD display shown on the “Line Status” screen ***Note:*** *ITDD Display is not available for load side configured units*

Operation Mode Setup Sub-Screen

Allows for selection of operation modes, CT Ratio, and unit calibration enable.

Note: *If button is GREEN, the option is ENABLED. If button is BLUE, option is DISABLED.*

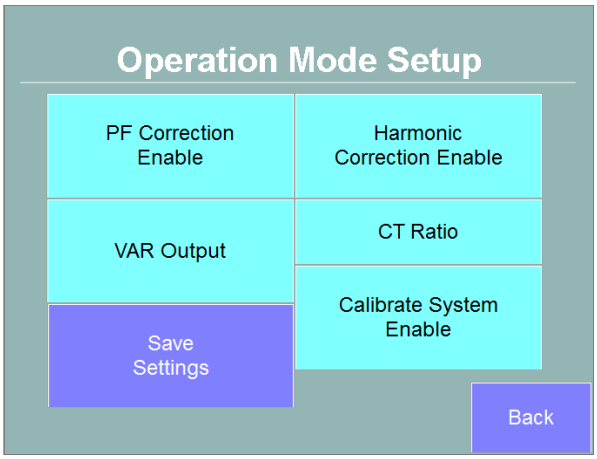

Figure 52: Operation Mode Setup Sub-Screen

Table 36: Harmonic/PF Correction Setup Screen Elements

Screen Element	Description
Harmonic Correction Enable	This option turns the Automatic Harmonic Correction on or off. This option is on by default. If both harmonic correction and power factor correction are enabled and the HarmonicGuard® Active filter is at its maximum capacity, the power factor correction will automatically be phased back to allow the system to continue correcting harmonics.
PF Correction Enable	This option turns the Automatic Power Correction on or off. This option is on by default. If both harmonic correction and power factor correction are enabled and the HarmonicGuard® Active filter is at its maximum capacity, the power factor correction will automatically be phased back to allow the system to continue correcting harmonics.
CT Ratio	The CT ratio button opens a pop-up sub screen that allows selection of the turns ratio of the system line or load current transducers (CTs). The CT ratio is expected to be in terms of primary current to 5A of secondary current. For example, a 1000:5 CT means that for 1000A of primary current there are 5A of current in the CT secondary winding connected to the active filter. See user manual **Table 4.4** for the allowable CT range for an active filter unit type.
VAR Output	The "VAR Output" button opens a sub screen that allows enabling the VAR output operation mode. User can enable either local or network mode and can manually enter in the desired output KVAR via keypad entry. The max leading/lagging KVAR output is unit amp rating specific ***Note:*** *Enabling this option will automatically disable PF correction, if enabled* ***Note:*** *Only network or local VAR Output can be enabled at any given time*
Calibrate System Enable	This button initiates the active filter sensor calibration procedure. There is no need to calibrate the unit unless instructed by authorized TCI field service personnel. The active filter ships from the factory with all sensors fully calibrated so calibration is not required at the time of unit startup. This button is available for recalibration of the unit during field service trips. The calibration process will only run if the unit is in the nominal stopped state. Calibration should be done when the system bus is at no-load.
Save Settings	This button will save the current working settings to non-volatile memory that persist when power is removed from the unit. To save the current settings choose "Yes" on the confirmation screen or choose "No" to cancel and go back to the "Basic Setup". The settings will not be saved if "No" is chosen. 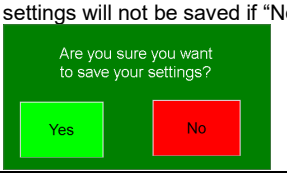
Back	Takes user back to the Tech Setup screen

Run/Stop Control Setup Sub-Screen

Allows user to configure control settings.

Note: *If button is GREEN, the option is ENABLED. If button is BLUE, option is DISABLED.*

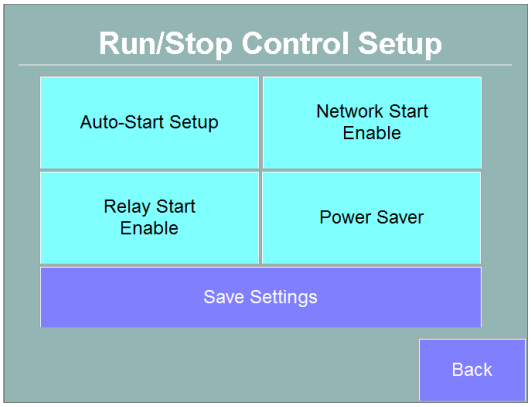

Figure 53: Tech Setup Screen

Table 37: Run/Stop Control Setup Screen Elements

Screen Element	Description
Auto-Start Setup	Takes user to Auto-Start Setup sub screen.
Relay Start Enable	This option allows the Active Line Conditioner to be remotely turned on or off via an external relay. J2 on the interface requires a switch closure to turn on the converter. If the stop button is pressed locally on the HMI Display, the unit will be put into an inhibit state and not respond to relay run commands until either the run button is pressed on the HMI display or the unit is power cycled. Once the run button is pressed, the relay start/stop command will again control the unit.
Network Start Enable	This option allows the Active Line Conditioner to be remotely turned on or off across a network connection. If the stop button is pressed locally on the HMI Display, the unit will be put into an inhibit state and not respond to network run commands until either the run button is pressed on the HMI display or the unit is power cycled. Once the run button is pressed, the network start/stop command will again control the unit.
Power Saver	This button opens the power save feature sub screen. The power save feature allows the unit to turn off its internal power converter, if the system line current, THID and/or Power factor drops below a set threshold. The line current Amp threshold depends on the system CTs installed with the active filter. For example, a power save threshold set to 10% with 1000:5 CTs installed would result in the filter turning off if less than 100A of current is measured via the line/load CTs. Both the line current threshold amps and percentage are displayed on the power save sub screen. The THID% and Power Factor turn on threshold level can also be set on the power save sub screen. In order to go into power-save mode the RMS, current level must be below the threshold. To come out of power save mode, first the RMS current level must be above the set RMS current threshold then either the THID must be above the set THID threshold or the power factor must be below the power factor threshold. The power save feature has a five second on/off delay and threshold hysteresis built in to prevent limit cycling of the active filter when the system current level is near the power save feature threshold.
Save Settings	This button will save the current working settings to non-volatile memory that persist when power is removed from the unit. To save the current settings, choose “Yes” on the confirmation screen, or choose “No” to cancel and go back to the “Basic Setup”. The settings will not be saved if “No” is chosen. 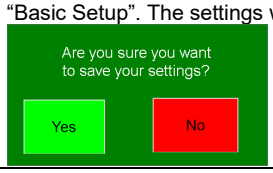
Back	Takes user back to the Tech Setup screen

Auto Start Setup Sub-Screen

Allows user to configure the parameters necessary to use the Auto-Start option.

Note: *If button is GREEN, the option is ENABLED. If button is BLUE, option is DISABLED.*

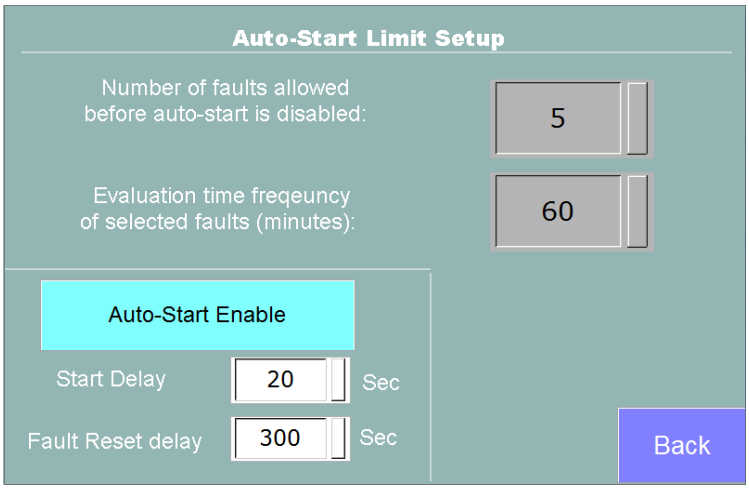

Figure 54: Auto Start Setup Screen

Table 38: Auto-Start Setup Screen Elements

Screen Element	Description
Auto-Start Enable	This option will set the converter to start automatically after a programmed delay after power is applied or after a fault occurs. This option is on by default.
Select number of faults	Allows user to select number of faults allowed to occur before auto start option is disabled.
Select time frequency	Allows user to select the time allowed between faults before auto start option is disabled.
Disable Auto-Start Limit	The disable auto start limit button will disable the frequency limit or the number of allowed unit auto-starts after a fault is detected.
Start Delay	The start delay is the time in seconds the active filter will wait after a power up or after a fault before auto starting the harmonic and/or power factor correction, if the auto start feature is enabled.
Fault Reset Delay	The fault reset delay is the time in seconds the active filter will wait after a fault is detected prior to attempting to auto-clear the fault and restart harmonic and/or power factor correction if the auto-start feature is enabled.
Back	Takes user back to the Tech Setup screen.

About Screen

The About Screen displays model number, serial number, and software/firmware version information regarding the filter, as well as the CT ratio.

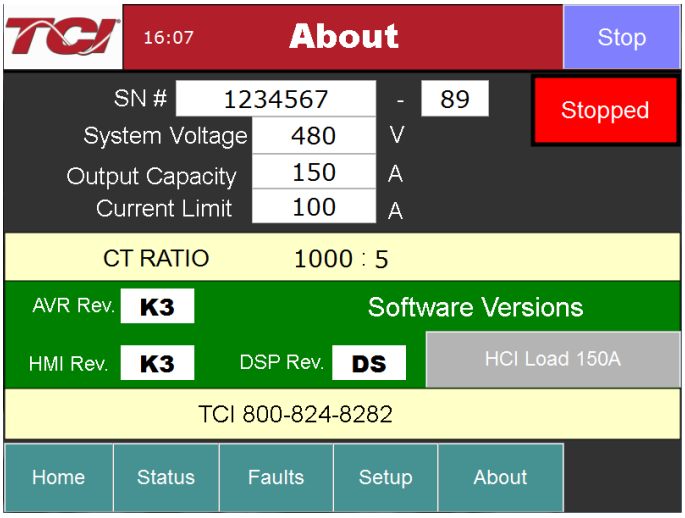

Figure 55: About Screen

Table 39: About Screen Elements

Screen Element	Description
Stop Button	Turns off the HarmonicGuard® Active filter.
Serial # Display	Displays the pre-programmed factory serial number of the HarmonicGuard® Active filter.
Total Output Current Display	Displays the total corrective current capacity in Amps RMS of the HarmonicGuard® Active filter.
System Voltage Display	Displays the line Voltage the HarmonicGuard® Active filter is set to run on.
CT Ratio Display	Displays the CT ratio the HarmonicGuard® Active filter is set to run on.
DSP Type Display	Displays the Digital Signal Processor type used in the HarmonicGuard® Active filter power converter controller.
DSP Revision Display	Displays the software revision of the installed Digital Signal Processor used in the HarmonicGuard® Active filter power converter controller.
AVR Revision Display	Displays the software revision of the installed microcontroller in the Interface PCB.
HMI Revision Display	Displays the software revision of the HMI Display application code.
Current Limit	Displays the configured corrective current limit in Amps RMS for the unit. The current limit will typically match the unit capacity, unless the unit has been derated for a specific application, such as high altitude or elevated ambient temperature.

Sensor Wiring Error Auto Detection Sub Screen

Some HarmonicGuard® Active filter models are equipped with Voltage and current feedback sensor wiring error detection algorithms. The detection algorithms run briefly on unit power up and check the unit sensors for signatures of common wiring errors, such as incorrect ACB phase rotation (instead of the required ABC rotation) and inverted system CT polarity.

The Sensor Wiring Error Sub Screen is a pop-up screen, which is not accessible from any of the main navigation screens. The screen is only displayed if a wiring error is detected. If no sensor wiring errors are detected, the pop-up screen will remain hidden.

If a Sensor Wiring Error is detected, the HGA will be inhibited from running until system power is removed from the unit and the error is corrected.

The Sensor Wiring Error Detection feature is comprised of several independent detection algorithms. The two main categories of algorithms are Voltage based detections and current

based detections. The Voltage based detection algorithms monitor the 3-phase line Voltage input for proper ABC phase rotation, polarity, balance and nominal magnitude. The current based detection algorithms monitor the system Current Transformer (CT) sensor feedback for proper phase rotation, polarity, balance, and CT open or shorted conditions. The current base detections are only engaged, if a minimum level of load current is present during power up. Both the Voltage and current detection algorithms can be globally or individually configured by TCI qualified personnel via the password protected Technician level Setup Screen.

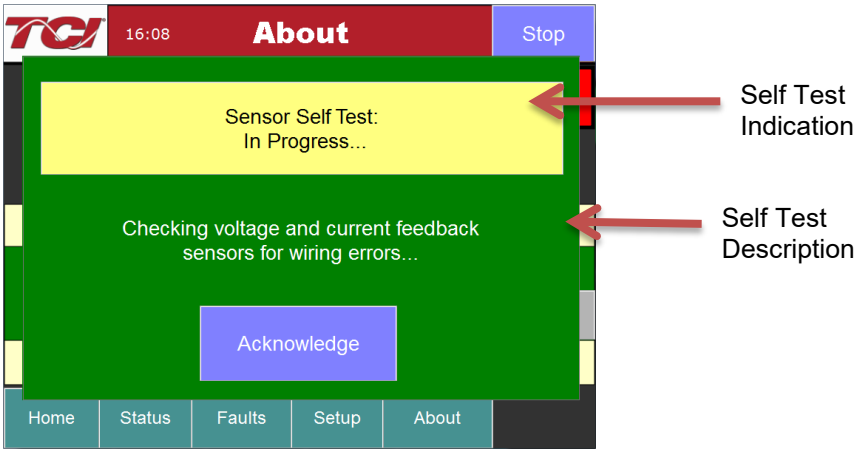

Figure 56: Sensor Wiring Error Self Test Sub Screen

Table 40: Sensor Wiring Error Self Test Sub Screen Elements

Screen Element	Description
Self Test Result Indication	Displays the current Pass/Fail/In-Progress State of the Sensor Wiring Error Auto Detection feature. When a sensor wiring error is detected the specific fault code will be shown.
Self Test Result Description	When a sensor wiring error is detected, one or more corrective actions will be displayed here. See Table 41 for a list of suggested resolutions.
Acknowledge Button	Pressing the Acknowledge Button will hide the Sensor Wiring Error Self Test Sub Screen so other screens can be examined in order to trouble shoot the wiring error. If a user attempts to operate the unit while a sensor wiring error is still present by pressing the Run or Stop buttons, the screen will reappear.

Table 41: Sensor Wiring Error Code Table

Error Code	Error	Suggested Corrective Action
0	No Error	No corrective action required.
1	Self Test In Progress	No correction action required. Typically, the self-test will complete and auto clear in less than 10 seconds after power up.
2	Line Voltage Synch	Turn off unit and check 3 phase AC input Voltage wiring for missing phase connection or low line Voltage.
3	Input Over Voltage	Turn off unit and check 3 phase AC input Voltage wiring for high line Voltage
4	Reverse Voltage Phase Rotation	Turn off unit and check 3 phase AC input Voltage wiring for A, B, C phase rotation or missing phase connection.
5	Phase A Input Under Voltage	Turn off unit and check 3 phase AC input Voltage wiring for missing phase or low line Voltage.
6	Phase B Input Under Voltage	Turn off unit and check 3 phase AC input Voltage wiring for missing phase or low line Voltage.
7	Phase C Input Under Voltage	Turn off unit and check 3 phase AC input Voltage wiring for missing phase or low line Voltage.
8	Reverse CT Current Rotation	Turn off unit and check system CT feedback for A, B, C phase rotation, inverted CT polarity, or CT short/open.
9	Phase A CT Under Current	Turn off unit and check system CT feedback for no feedback (CT short or open).
10	CT Under Current	Turn off unit and check system CT feedback for no feedback (CT short or open).

Error Code	Error	Suggested Corrective Action
11	Phase C CT Under Current	Turn off unit and check system CT feedback for no feedback (CT short or open).
12	Phase A CT Polarity	Turn off unit and check system CT phase A feedback for incorrect polarity or reverse phase rotation.
13	CT Polarity	Turn off unit and check system CT phase A and C feedback for incorrect polarity or reverse phase rotation.
14	Phase C CT Polarity	Turn off unit and check system CT feedback phase C for incorrect polarity or reverse phase rotation.
15	Phase Power Imbalance	Turn off unit and check CT feedback and 3 phase AC input Voltage for incorrect polarity or reverse phase rotation.

Network Interface

The network interface on the Interface Module allows basic Run/Stop commands and internal status data and can be communicated to and from the HarmonicGuard® Active filter. The HMI display implements an integrated ModbusRTU slave device for the network interface (see the HMI Display Connection section) or an optional network communications gateway can be used such as Ethernet/IP to implement other protocols (see Appendix A: Ethernet/IP Gateway Option).

The input/output register maps of the data available from the network interface are available in Table 42 and Table 43. All input and output registers are two bytes in size and formatted as 16-bit signed integers. For the base address of the input and output data sections, please reference the connection sections in this manual specific to the configured protocol. For the integrated ModbusRTU network interface, reference the HMI Display Connection section. If an option Communications Gateway is configured, reference the appendix.

Table 42: Network Interface OUTPUT Register Map

Parameter Name	I/O Reg Address Offset	Direction	Data Values and Examples	Description
SYS_RUNNING	0	Output	0 = Idle 1 = Running	Indicates if the HGA filter is currently running or in the idle state
SYS_POWER_ON	1	Output	0 = Power Off 1 = Power On	Indicates if the HGA filter has input power available
SYS_FAULTED	2	Output	0 = Not faulted 1 = Faulted	Indicates if the HGA filter is faulted
SYS_IN_I_LIMIT	3	Output	0 = Nominal 1 = At Capacity	Indicates if the HGA filter is running at its maximum capacity
V_LINE_LL_RMS	4	Output	Volts RMS 480 = 480 VRMSLL Range: 0 to 1,000	Source Utility Line Phase to Phase Voltage
I_LINE_RMS	5	Output	Amps RMS 1,000 = 1,000 ARMS Range: 0 to 10,000	Line/Load Phase Current
I_LINE_PF	6	Output	100 = 1.00 Unity PF -95 = 0.95 Lagging PF 95 = 0.95 Leading PF Range = -99 to 100	Line/Load Displacement Power Factor - Negative values indicate lagging power factor
SYS_NW_START_EN	7	Output	0 = Network Run Disabled 1 = Network Run Enabled	Network Run/Stop command enable setpoint

<table>
<tr><th>Parameter Name</th><th>I/O Reg Address Offset</th><th>Direction</th><th>Data Values and Examples</th><th>Description</th></tr>
<tr><td>SYS_STATE</td><td>8</td><td>Output</td><td>0,1 = Initialization
2 = Fault inhibit
3 = Input inhibit
4 = Fault reset
5 = Stop
6,7 = Pre-Charge
8 = Run
9 = Fault
10 = Calibration
11 = Power Save
13 = Communication Configuration
14 = Calibration Self Check</td><td>Present control state of power converter</td></tr>
<tr><td>I_CONV_RMS</td><td>9</td><td>Output</td><td>Amps RMS
100=100Amps
Range: 0 to current rating of unit</td><td>Active filter correction injection current</td></tr>
<tr><td>FAULT_ACTIVE</td><td>10</td><td>Output</td><td>16 position bit-mapped value:
Bit | Fault
0 | - IGBT Gate
1 | - Exhaust OT
2 | - Internal CPU
3 | - DC Bus OV
4 | - DC Bus UV
5 | - Phase A OC
6 | - Phase B OC
7 | - Phase C OC
8 | - HW Phase A OC
9 | - HW Phase B OC
10 | - HW Phase 10 OC
11 | - Power Conv OT
12 | - Power Conv UT
13 | - Unit Cal
14 | - Com Fault
15 | - Restart Limit</td><td>Each bit represents whether the assigned fault was detected. A value of binary 1 indicate the assigned fault was detected and a value of zero indicates the assigned value was not detected.</td></tr>
<tr><td>FAULT_LOCATION</td><td>11</td><td>Output</td><td>16 position bit-mapped value
bit0 = Power Converter 1 Fault (leftmost position)
Bit1 = Power Converter 2 Fault
Bit3= Power Converter 3 Fault</td><td>System fault location indicator bits. Each bit represents wither a fault was detected in a power converter. A value of binary 1 indicates the assigned power converter detected a fault and a value of 0 indicates the assigned power converter did not detect a fault.</td></tr>
<tr><td>MB_INHIBIT_ACTIVE</td><td>12</td><td>Output</td><td></td><td>System wiring error unit inhibit code. Please reference Table 41: Sensor Wiring Error Code Table for a list of error codes and their definitions. For units equipped with an HMI touchscreen the error code definitions are also displayed on the unit’s local HMI.</td></tr>
<tr><td>T_CONV</td><td>13</td><td>Output</td><td>Degrees C
25=25C</td><td>Primary power converter heatsink temperature</td></tr>
<tr><td>SYS_INT_HB</td><td>14</td><td>Output</td><td>Range 0 to 65535</td><td>Processor internal heartbeat. Internal counter that counts up and rolls over to zero used to verify processor clock operation.</td></tr>
<tr><td>SW_DSP</td><td>15</td><td>Output</td><td>Two 8bit ASCCI Characters
0x3144 = ASCCI for "D1"</td><td>Software revision code for power converter processor.</td></tr>
<tr><td>AVR_SW_VER</td><td>16</td><td>Output</td><td>Two 8bit ASCCI Characters
0x3144 = ASCCI for "D1"</td><td>Software revision code for communications interface processor</td></tr>
</table>

Parameter Name	I/O Reg Address Offset	Direction	Data Values and Examples	Description
ID_HMI_SW_VER	17	Output	Two 8bit ASCCI Characters 0x3144 = ASCCI for "D1"	Software revision code for HMI touchscreen processor.
SYS_MODEL_NUM	18	Output	8,9,16=Line Side Control 12,13,18=Load Side Control	Active filter Line or Load controls configuration.
SYS_SERIAL_NUM_2	19	Output	Parameter contains UUUU in the UUUULLLL-NN serial number format.	Unit serial number section - upper 16 bits of 32-bit unit job number
SYS_SERIAL_NUM_1	20	Output	Parameter contains LLLL in the UUUULLLL-NN serial number format.	Unit serial number section - lower 16 bits of 32-bit unit job number
SYS_SERIAL_NUM_0	21	Output	Parameter contains NN in the UUUULLLL- NN serial number format.	Unit serial number section - two-digit unit number
MB_ID_SYS_CURRENT_LIMIT	22	Output	Amps RMS100=100AmpsRange: 0 to current rating of unit	Active filter current limit setpoint. Sometime the current limit of the unit is set lower than max capacity of the model to derate for altitude or ambient temperature.
SYS_CAPACITY	23	Output	Percent injection current used 100=100% Range: 0 to 100	Present injection current capacity of active filter in units of percent of max capacity.
CT_RATIO	24	Output	XXXX:5 where XXXX is the primary turns count of the CT. 1000 = 1000:5 CT Range: 100 to 10000	Line or Load Current Transformer (CT) turns ratio.
SYS_IN_T_LIMIT	25	Output	0 = Unit not in thermal limit 1 = Unit in thermal limit	Indicator that unit is in thermal limit current foldback. Active filter correction current reduced due to power converter heatsink temperature approaching trip level.
SYS_PWR_SV	26	Output	0 = Unit not in power save mode 1 = Unit in power save mode.	Indicator for unit in power save mode where a run command is present but correction demand below turn on threshold.
I_LINE_THD	27	Output	% THD 50=5.0% THD Range: 0 to 100	THID for line current feedback (for units configured for line side/bus applied control) or THID for load current feedback (for units configured for load side control).
I_LINE_THD_REF	28	Output	% THD 50=5.0% THD Range: 0 to 100	THID of line current feedback BEFORE active filter turn on. In cases of low signal feedback, this value will be zeroed out.
V_LINE_THD	29	Output	% THD 50=5.0% THD Range: 0 to 100	THVD of line Voltage at injection point. In cases of low signal feedback, this value will be zeroed out.
NW_VAR_OUTPUT_EN	30	Output	0 = Network VAR Output Disabled 1 = Network VAR Output Enabled	Network VAR Output control mode enable command

Table 43: Network Interface INPUT Register Map

Parameter Name	I/O Reg Address Offset	Direction	Format	Description
SYS_NW_START_IN	0	Input	0 = Network Command Stop 1 = Network Command Run	Remote Network Run/Stop command to the HGA
NW_VAR_OUTPUT_SET POINT	1	Input	Enter in desired leading/lagging kVAR output ***Note:*** *Software bounds to be unit amp rating appropriate* ***Note:*** *A negative setpoint value results in lagging kVAR output.*	Commanded KVAR value for controller while in VAR Output mode
Unused	1	Input	-	-
Unused	2	Input	-	-
Unused	3	Input	-	-
Unused	4	Input	-	-
Unused	5	Input	-	-
Unused	6	Input	-	-
Unused	7	Input	-	-

The network Run/Stop command allows a remote network to send a run command to the HarmonicGuard® Active filter. The network command input will only be acknowledged if the Network Run/Stop Enable is set to ENABLED on the HMI Display setup screen. If the stop button is pressed locally on the HMI Display, the unit will be put into an inhibit state and not respond to network run commands until either the run button is pressed on the HMI display or the unit is power cycled. Once the run button is pressed, the network start/stop command will again control the unit

Wiring Setup Screen

The wiring selection screen is used to configure the feedback and connections of the CT's and power wiring.

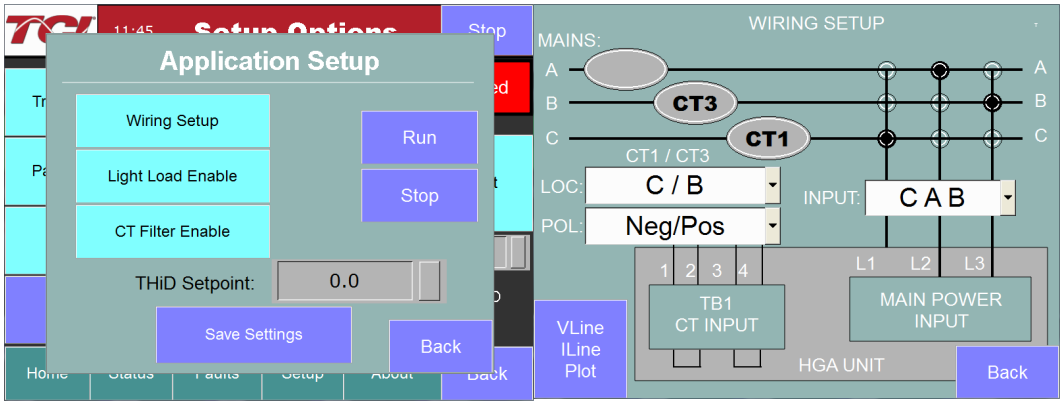

Figure 57: Wiring Setup screen

This screen is used to compensate for reversed CT's, CT's on wrong phases, and power wiring discrepancies that occur during installation.

The main benefit of it is to avoid making a hardware change such as moving/replacing a CT or a power wire that requires a shutdown.

Note: This only works on single panel units

8.0 HMI Maintenance

Clock Battery Replacement

The HMI Display Real Time Clock is maintained by a non-rechargeable battery internal to the HMI Display. Change the battery every ten years or as needed. The system will continue to function as an active filter with a dead battery, but HMI information (fault logs and trend plots) will not be maintained between power cycles.

To replace the battery, open the battery cover on the back of the HMI Display and remove the old battery. Dispose or recycle the old battery in accordance with any applicable national, state/provincial, and local requirements. Install new battery and close battery cover.

Replacement Battery Type: 3V Lithium CR2032 x Quantity 1

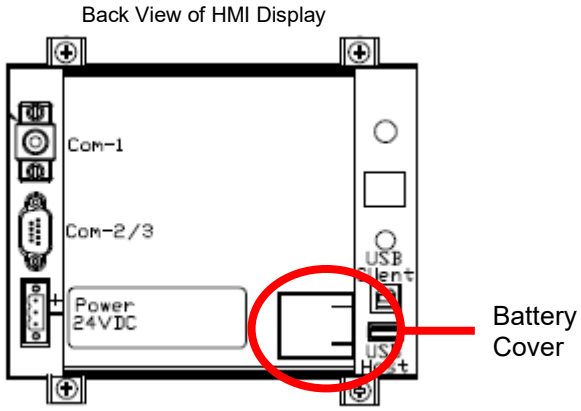

Figure 58: HMI Display Battery Location

Software Field Upgrades

In the event the HMI Display application software needs to be upgraded, the USB host port on the back panel of the HMI Display can be used for field upgrades. Software upgrade instructions will be sent with any software updates provided by TCI.

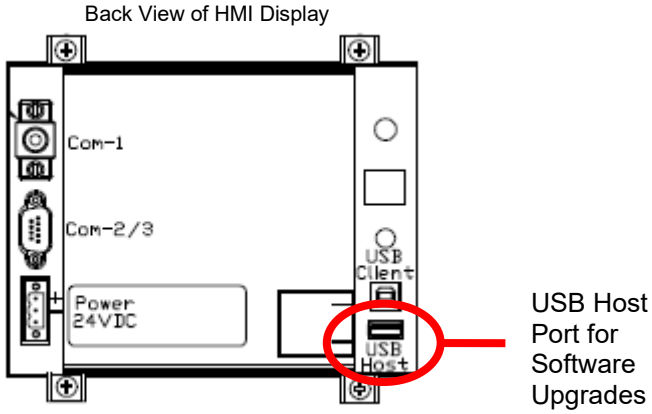

Figure 59: HMI Display USB Host Location

9.0 HMI Troubleshooting

HarmonicGuard® Active Filter Fault

If the display indicates a fault has occurred, proceed to the fault screen by choosing the “Fault” menu screen button. To see if this is a recurring fault, hit the “History” button from inside the “Fault” screen. To clear a fault, press the “Reset” button from inside the “Fault” Screen or the “Stop” button from any screen.

Warning	Only qualified electricians should carry out all electrical installation & maintenance work on the HGA. Disconnect all sources of power to the HGA and connected equipment before working on the equipment. Do not attempt any work on a powered HGA. This HGA unit contains high Voltages and capacitors. Wait at least five minutes after disconnecting power from the filter before attempting to service the conditioner. Check for zero Voltage between all terminals on the capacitors. Also, check for zero Voltage between all phases of the input and output lines. All maintenance and troubleshooting must be done by a qualified electrician. Failure to follow standard safety procedures may result in death or serious injury. **Unless an external disconnect means has been provided everything ahead of the filter circuit breaker, including the reactors, will still be energized.**

Interface Module Problem

The Interface Module is comprised of four major components; the HMI display, the Interface PCB, the cabling and an optional Gateway. The Interface PCB contains diagnostic LEDs. The locations of the LEDs are shown in Figure 58 and their functions are listed in Table 44.

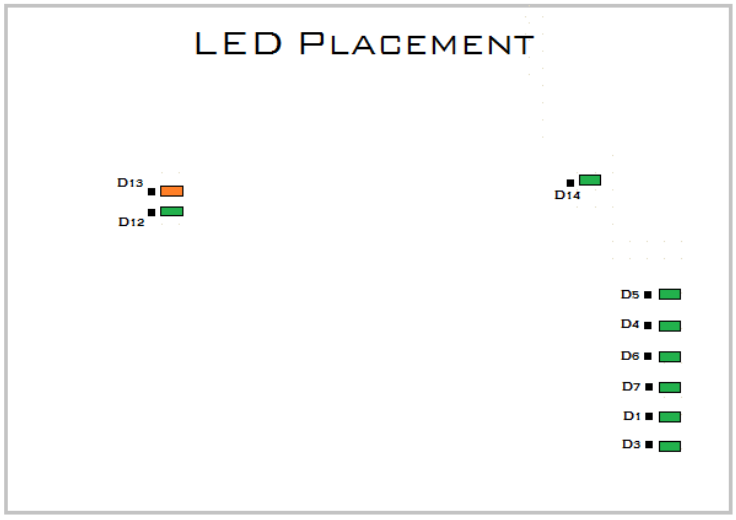

Figure 60: Communications Board LED placement

Table 44: LED Functions

LED	LED Color	Description (LED Color)
D1	Green	AUX 1
D3	Green	AUX 2
D4	Green	Running Relay Energized
D5	Green	Power-On Relay Energized
D6	Green	Fault Relay Energized
D7	Green	Current Limit Relay Energized
D12	Green	RS485 Communication is active from converter
D13	Orange	RS485 Communication is active to converter
D14	Green	Input Run Command Present

Warning 	Many electronic components located within the filter are sensitive to static electricity. Voltages imperceptible to human touch can reduce the life, affect performance and/or destroy sensitive electronic devices. Use proper electrostatic discharge (ESD) procedures when servicing the filter and its circuit boards.

Fault Troubleshooting Notes

- To reboot the system, remove power to the filter and Interface Module, wait a few minutes then reapply. If this does not work, check all the cable and connections and try again. If the problem is still not resolved, replace the Interface Module assembly.
- If no buttons are pressed for 5 minutes, the screen will turn off. To reactivate, touch anywhere on the screen.
- If the HMI Display shows a “COM 1 Station 1: Communication Error” across the bottom of the screen, check the serial cable between HMI Display COM1 and Interface PCB J1.
- If the HMI Display shows a “NO COM” indication on the system state indicator or a 7010 Communications Fault in the fault screen, check the serial cable between Interface PCB J2 and the HarmonicGuard® Active filter power converter module J25 (100A/50A units) or J7 (200A units).
- For technical support, contact TCI directly at 1-800-824-8282. Select "Customer Service" or "Technical Support".

10.0 Appendix A: Ethernet/IP Gateway Option

Introduction

The Ethernet/IP network Communications Gateway translates command/status data to/from the HMI Display's integrated network interface from the ModbusRTU protocol to Ethernet/IP. The Ethernet/IP Communications Gateway is implemented using a third party, industry leading Ethernet/IP solution from HMS Anybus Communicator Product Line (Anybus Communicator AB7007).

Table 45: EtherNet/IP Communications Gateway Key Features

Feature	Description
Profile Support	Ethernet/IP level 2 I/O Server CIP, Ethernet/IP Adapter Class Device
Connection	10/100 MBit twisted pair RJ45 Connection
Galvanic Isolation	Transformer isolated Ethernet interface
TCP/IP Settings	Web Browser Based Configuration
Baud Rate	10/100 MBit auto detect
Protocol Conformance	Fully compliant Ethernet/IP gateway (ODVA File Number E-090-10070). See HMS website (www.hms.se) for Conformance Test Results.

Note: *The optional network Communications Gateway part number and hardware is identical for the Ethernet/IP interface and the Modbus TCP/IP interface. Verify you are referencing the appropriate Appendix section for the network protocol you have selected.*

Wiring

Connection of the HarmonicGuard® Active filter Interface Module to the end user's upstream Ethernet/IP network occurs at the RJ45 connection on the Communications Gateway. The Communication Gateway is mounted on the back panel of the Interface Module.

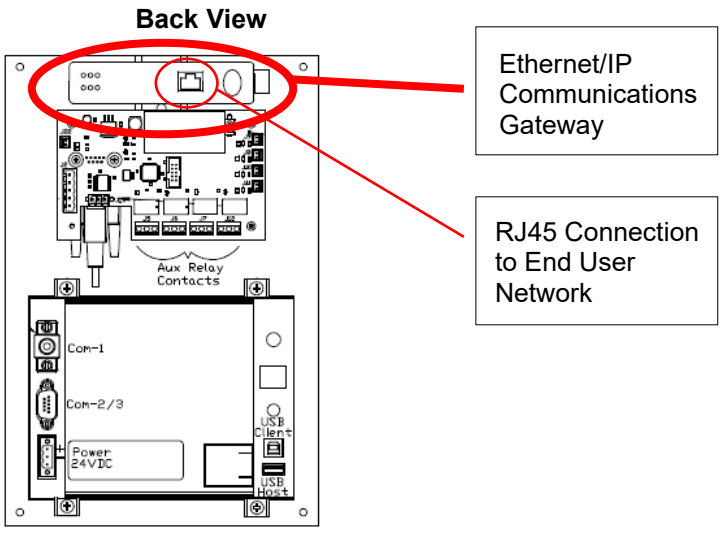

Figure 61: EtherNet/IP Communications Gateway Location

Table 46: EtherNet/IP Connector Pinout

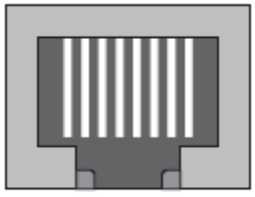

Pin Number	Description
1	TD+
2	TD-
3	RD+
6	RD-
4, 5, 7, 8	Termination

Configuration

To configure the IP address of the Ethernet/IP communications gateway, connect the gateway to the Ethernet network then open a web browser window and type in the default IP address of the gateway and press enter. The Communications Gateway configuration page should load.

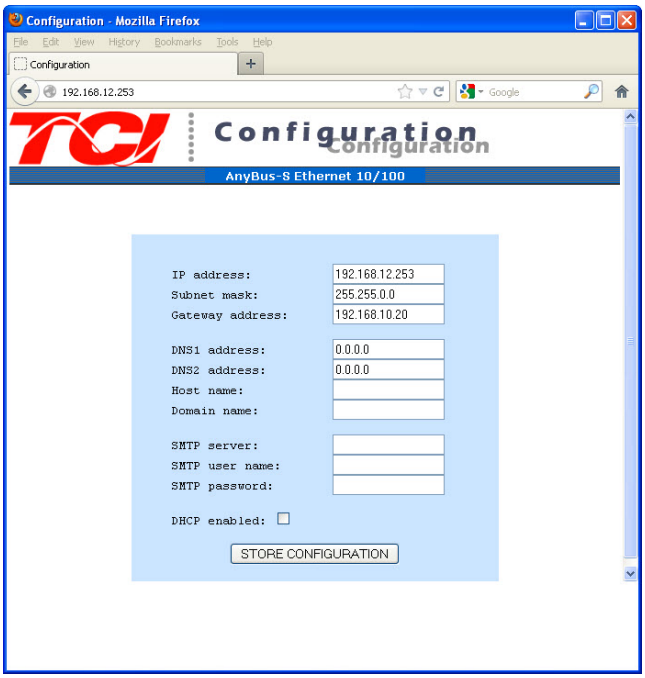

Figure 62: EtherNet/IP Gateway Configuration Page

Table 47: Gateway Default Settings

Setting	Default Value
IP Address	192.168.0.1
Gateway	255.255.255.0
Subnet	255.255.255.0
DHCP	Off

To update the IP address, type in a new IP address on the configuration page, then click on the STORE CONFIGURATION button. After the new IP address is stored, cycle power to the Communication Gateway to load the new IP address.

The Ethernet/IP Communications Gateway supports implicit Ethernet/IP I/O and explicit Ethernet/IP CIP Message commands. For an example of communication with the Gateway using explicit CIP Message commands via a PLC, please reference the following application note from HMS: *Reading/writing data from Anybus-S Ethernet/IP using ControlLogix5000 MSG instruction.*

The EDS file for the Ethernet/IP Communications Gateway is available via TCI technical support (direct dial: 414-357-4541, email tech-support@transcoil.com) or from the TCI website (http://www.transcoil.com/Support.htm)

For advanced configuration options, such as IP Access Control, reference the HMS Anybus Communicator Serial Ethernet/IP Gateway User Manual, available on the HMS website (www.hms.se)

Register Map

For a description of the input and output data available over the network interface, reference Section **7.0 HMI Introduction** in this user manual.

Operation

The Communication Gateway has six LED indicators that show the current status of the Ethernet/IP and sub-network communications. The meanings of the LED indicators are described below.

Table 48: EtherNet/IP Gateway LED Diagram

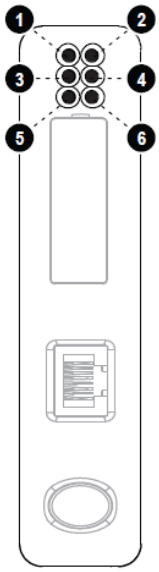

Gateway Front View

LED Number	Indication	Meaning
1 (Module Status)	Off Green Flashing Green Flashing Red Red Flashing Green/Red	No Power Normal Operation Configuration Missing Minor Fault, Recoverable Major Fault, Unrecoverable Self-Test in Progress
2 (Network Status)	Off Green Flashing Green Red Flashing Red Flashing Green/Red	No IP Address Online, Connection(s) Established Online, No Connection Established Duplicate IP Address Connection(s) Timed Out Self Test in Progress
3 (Link)	Off Green	No Link Connected to Ethernet Network
4 (Activity)	Off Flashing Green	No Ethernet Activity Receiving/Transmitting Packets
5 (Subnet Status)	Flashing Green Green Red	Running, Transaction Error Detected Running Transaction error, timeout
6 (Device Status)	Off Flashing Green/Red Green Flashing Green Red Flashing Red	Power Off Invalid or Missing Configuration Initializing Running Bootloader Mode Note the LED flash sequence and contact Technical Support

HMS Gateway to PLC Master Example

HMI slave connected through Anybus gateway to PLC Master:

Required equipment

- Anybus gateway programmed with TCI Anybus configuration
- HMI display connected to Anybus gateway
- Local Area Network (LAN) routers
- Rockwell ML1100 PLC
- LED Network for output display
- Ethernet RS45 cables

Setup

- Connect the RJ45 cable to the Ethernet Port on the Anybus gateway from a router (LAN).
- Connect the PLC to the router (LAN) via RJ45 cable.
- The network setup is displayed below.

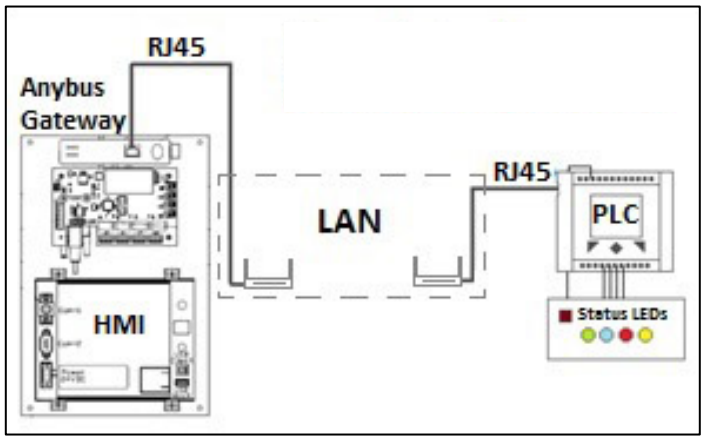

Figure 63: Anybus Gateway Network Setup with PLC Example

Programming

- Once all the connections are set, the PLC is programmed with the required configuration.
- The PLC and the Anybus are first established on the RSLinx network.
- The Ethernet Driver option is selected in RSLinx to find the PLC and the Gateway by typing the IP addresses for the respective devices in the Ethernet Driver configuration.
- Once the Devices are found by RSLinx, RSLogix Micro is opened to program the PLC.
- There is no need to change PLC channel configuration settings.
- Data files N7 (integer) and N18 (integer) are created with 8 words and 1 word respectively.

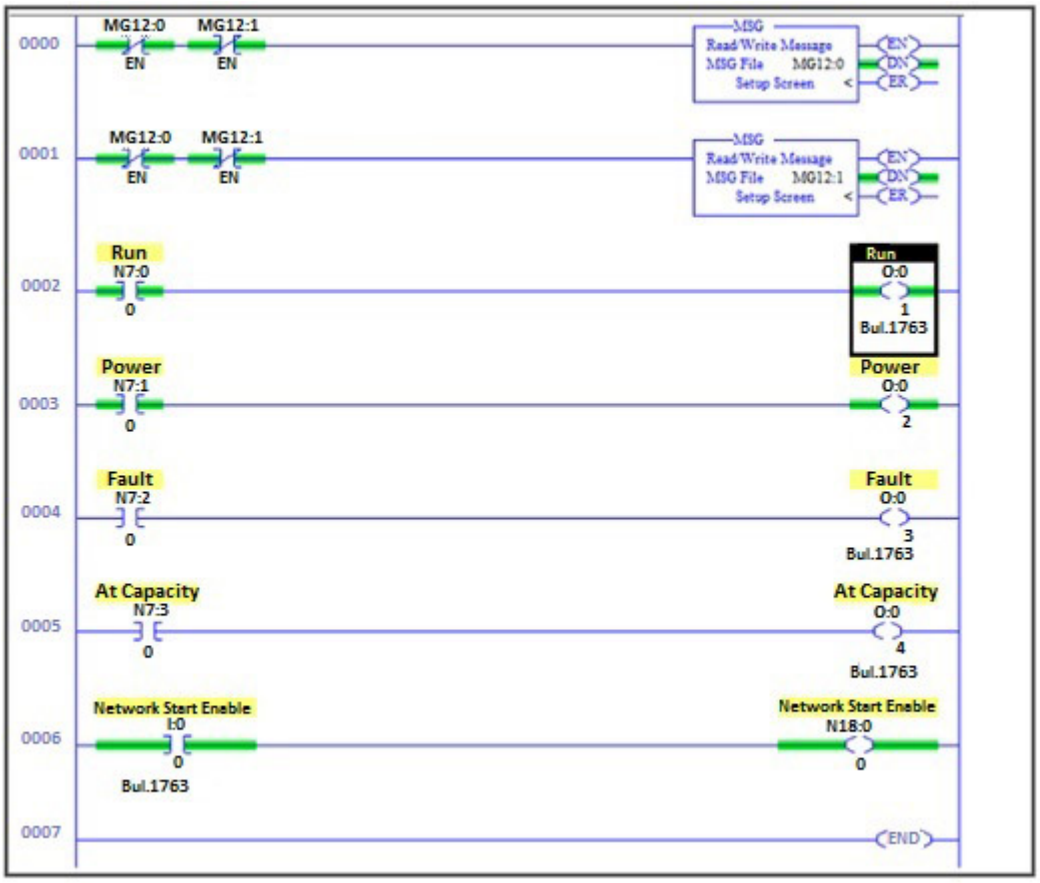

Figure 64: Ladder Logic Diagram

- Data file MG 12 is a message file containing 2 elements 0 and 1.
- The Message Structure settings are shown in Figure 63 (write command) and Figure 64 (read command).

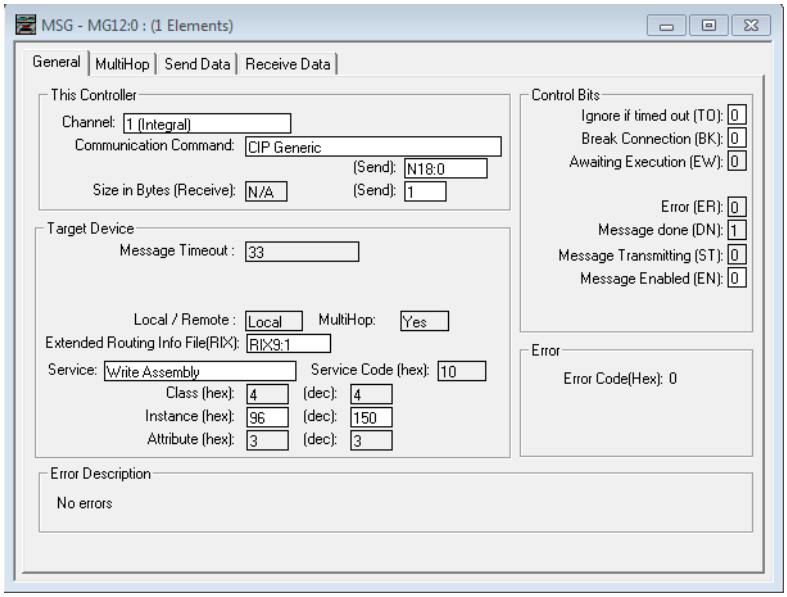

Figure 65: Message Structure (Write Command) Settings

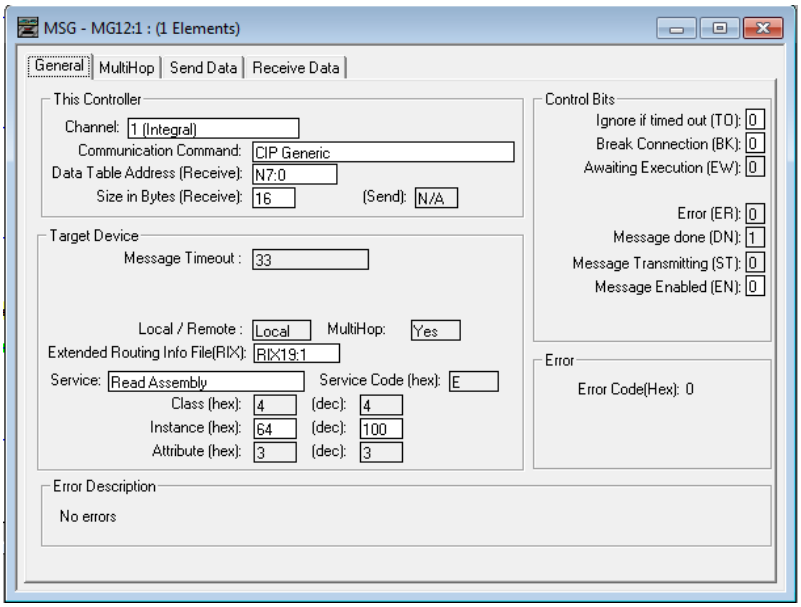

Figure 66: Message Structure (Read Command) Settings

- Data files RIX19 and RIX9 hold the message read and write information respectively.
- The Anybus gateway configuration is programmed for 16 bit I/O registers.
- 1 PLC word (2 bytes) = 1 Anybus 16 bit I/O register.
- As there are 8 registers in total the “Size in Bytes (Receive)” will equal 16, 2 bytes for each PLC word.
- The above steps set the PLC settings to successfully communicate and exchange data with the Anybus gateway.
- The program can now be downloaded on to the PLC and set to run.

11.0 Appendix B: Modbus TCP/IP Gateway Option

Introduction

The Modbus TCP/IP network Communications Gateway translates command/status data to/from the HMI Display's integrated network interface from the Modbus RTU protocol to Modbus TCP/IP. Modbus TCP/IP (also Modbus-TCP) is simply the Modbus-RTU protocol with a TCP interface that runs on Ethernet. The Modbus TCP/IP Communications Gateway is implemented using a third party, industry leading Modbus TCP/IP solution from HMS Anybus Communicator Product Line (Anybus Communicator AB7007).

Table 49: Modbus TCP/IP Communications Gateway Key Features

Feature	Description
Profile Support	Modbus/TCP class 0, class 1 and partially class 2 slave functionality
Connection	10/100 MBit twisted pair RJ45 Connection
Galvanic Isolation	Transformer isolated Ethernet interface
TCP/IP Settings	Web Browser Based Configuration
Baud Rate	10/100 MBit auto detect
Protocol Conformance	Fully compliant Modbus TCP/IP gateway See HMS website (www.hms.se) for Conformance Test Results.

Note: *The optional network Communications Gateway part number and hardware is identical for the Ethernet/IP interface and the Modbus TCP/IP interface. Verify you are referencing the appropriate Appendix section for the network protocol you have selected.*

Wiring

Connection of the HarmonicGuard® Active filter Interface Module to the end user's upstream Modbus TCP/IP network occurs at the RJ45 connection on the Communications Gateway. The Communication Gateway is mounted on the back panel of the Interface Module.

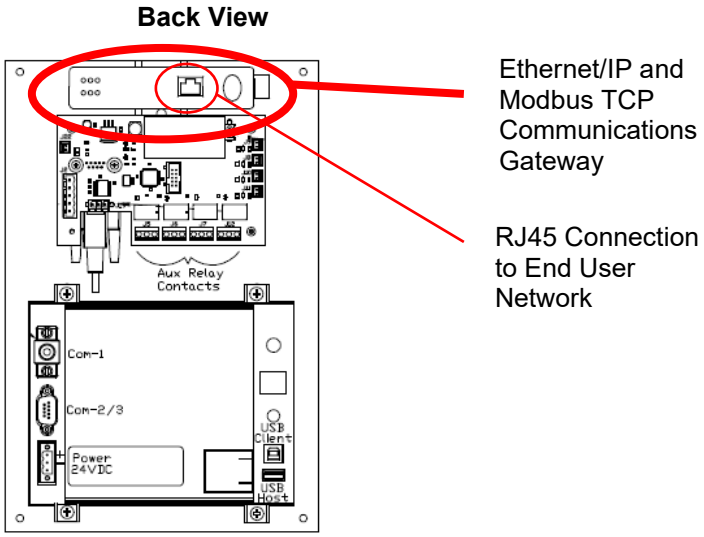

Figure 67: Modbus TCP/IP Communications Gateway Location

Table 50: Modbus TCP/IP Connector Pinout

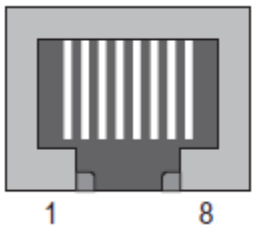

Pin Number	Description
1	TD+
2	TD-
3	RD+
6	RD-
4, 5, 7, 8	Termination

Configuration

To configure the IP address of the Modbus TCP/IP communications gateway, there are two options. The preferred method is to use the IPConfig tool provided by HMS. This can be downloaded for free from their website www.anybus.com.

For this option, first connect a computer to the same network that the Anybus module is connected. Next, open the IPConfig tool. Select “Scan” and the device should be present on the screen with the default IP address shown below.

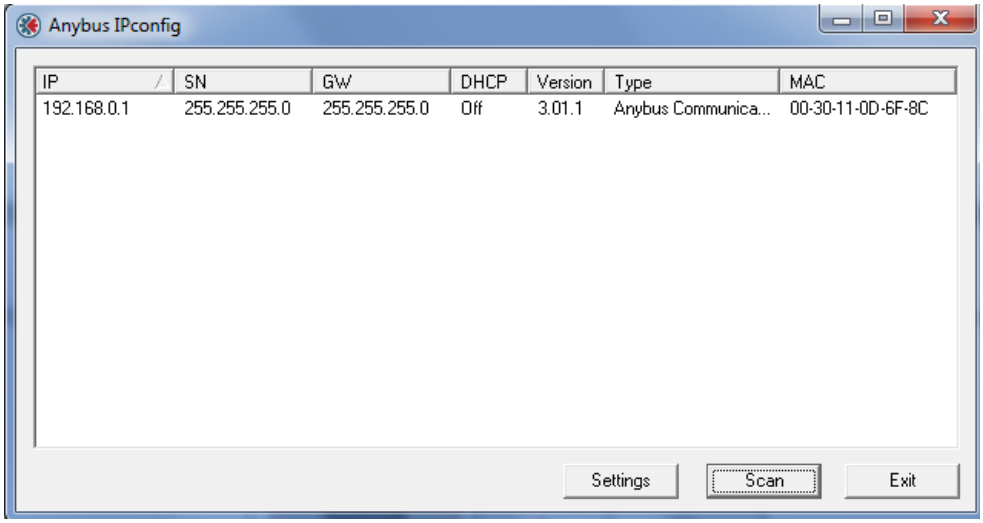

To change this to a desired IP address, simply select it, right click and go to “Configuration”. Here the new address and network information can be entered.

The gateway can also be connected to the Ethernet network and then open a web browser window and type in the default IP address of the gateway and press enter. The Communications Gateway configuration page should load.

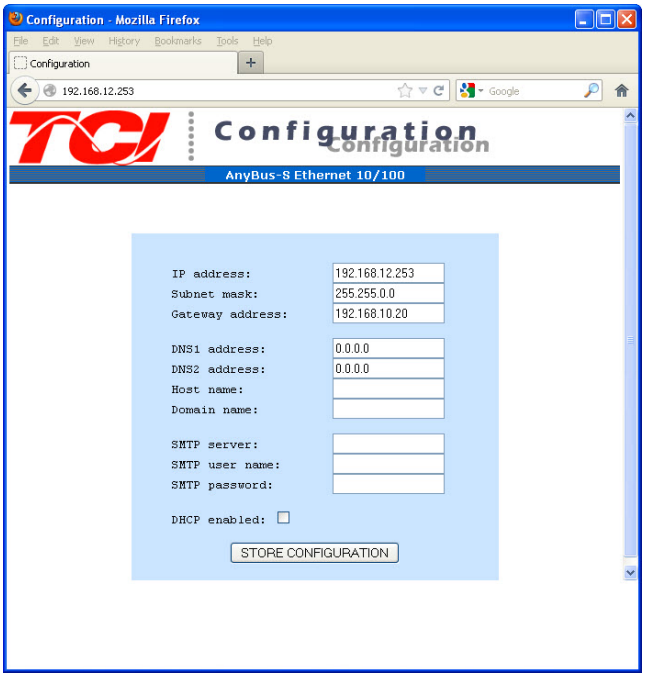

Figure 68: Modbus TCP/IP Gateway Configuration Page

Table 51: Gateway Default Settings

Setting	Default Value
IP Address	192.168.0.1
Gateway	255.255.255.0
Subnet	255.255.255.0
DHCP	Off

To update the IP address, type in a new IP address on the configuration page, then click on the STORE CONFIGURATION button. After the new IP address is stored, cycle power to the Communication Gateway to load the new IP address.

For advanced configuration options, such as IP Access Control, reference the HMS Anybus Communicator Serial Modbus TCP/IP Gateway User Manual available on the HMS website (www.hms.se)

Register Map and Address Offsets

For a description of the input and output data registers available over the network interface reference **Section 6** in this user manual.

For the Modbus TCP interface the **HGA output status data** registers from the HGA, which contain unit status, Voltage, current, etc. are in **Modbus register space 30000 (3x Input Registers)**. This register space should be access via **Modbus Function Code 04 Read Input Registers**.

For the Modbus TCP interface the **HGA input command data** register to the HGA, which contains the unit run stop command are in Modbus register space **40000 (4x Holding Registers).** This register space should be access via **Modbus Function code 06 Write Single Register**.

Operation

The Communication Gateway has six LED indicators that show the current status of the Modbus TCP/IP and sub-network communications. The meanings of the LED indicators are described in the table below.

Table 52: Modbus TCP/IP Gateway LED Diagram

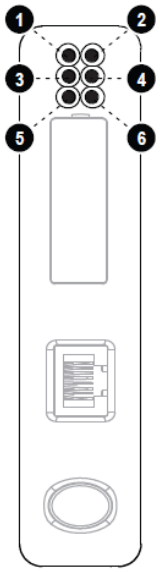

Gateway Front View

LED Number	Indication	Meaning
1 (Module Status)	Off Green Flashing Green Flashing Red Red Flashing Green/Red	No Power Normal Operation Configuration Missing Minor Fault, Recoverable Major Fault, Unrecoverable Self Test in Progress
2 (Network Status)	Off Green Flashing Green Red Flashing Red Flashing Green/Red	No IP Address Online, Connection(s) Established Online, No Connection Established Duplicate IP Address Connection(s) Timed Out Self Test in Progress
3 (Link)	Off Green	No Link Connected to Ethernet Network
4 (Activity)	Off Flashing Green	No Ethernet Activity Receiving/Transmitting Packets
5 (Subnet Status)	Flashing Green Green Red	Running, Transaction Error Detected Running Transaction error, timeout
6 (Device Status)	Off Flashing Green/Red Green Flashing Green Red Flashing Red	Power Off Invalid or Missing Configuration Initializing Running Bootloader Mode Note the LED flash sequence and contact customer support

HMS Gateway Example

HMI slave connected through Anybus gateway to Simply Modus Master:

Required equipment

- Anybus gateway programmed with TCI Anybus configuration
- HMI display connected to Anybus gateway
- Local Area Network (LAN) routers
- Simply Modbus Master Software
- Ethernet RJ45 cables

Setup

- Connect the RJ45 cable to the Ethernet Port on the Anybus gateway from a router (LAN).
- Connect the PC to the router (LAN) via RJ45 Ethernet cable.
- The network setup is displayed below.

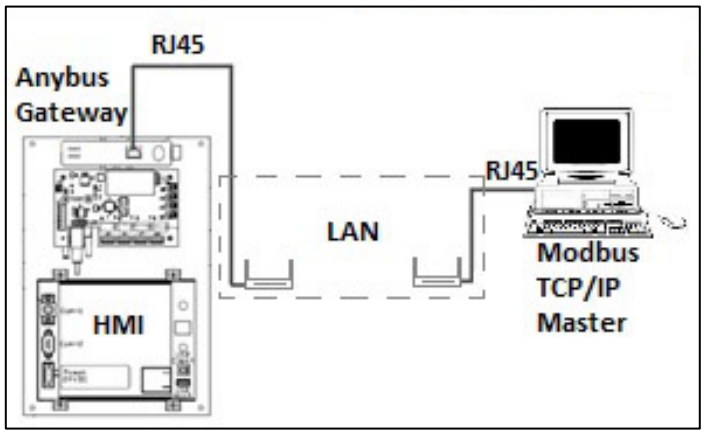

Figure 69: Network Setup with PC Example

Programming

- Once all connections are set, the Modbus TCP master is ready for communication.
- In the example, the Modbus TCP master is “Simply Modbus”

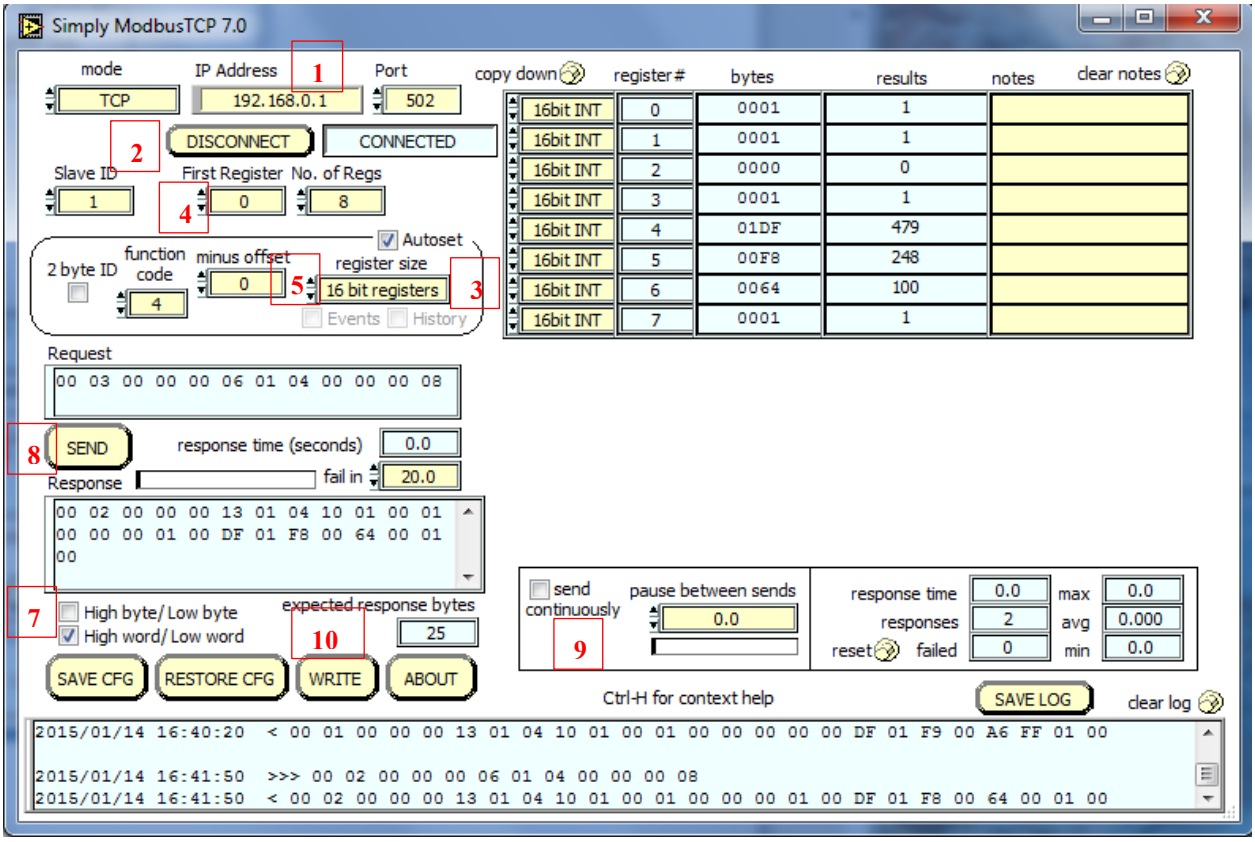

Figure 70: Simply Modbus Screen

- Read HMI Data
- Open Simply Modbus and type in the IP address set for the Modbus TCP/IP gateway **(1)**.
- Select mode as TCP and then hit CONNECT **(2)**. Once connected, a disconnect option will appear in place of NOT CONNECTED.
- Set the register size as 16 bits **(3)**.
- Select the first register as “0” and No. of Regs to 8 **(4)**.
- Set the minus offset at “0” **(5).**
- Set the function code to 4 **(6).**
- Uncheck the High Byte / Low Byte Check box **(7).**
- Click SEND **(8)**. The HMI data will appear on the table in the upper right side of the Simply Modbus application. For register map definitions, please reference the network interface reference **Section 7** in this user manual for data format and scaling.
- To receive data continuously, decrease the pause between sends to 0.0 and check send continuously **(9)**.

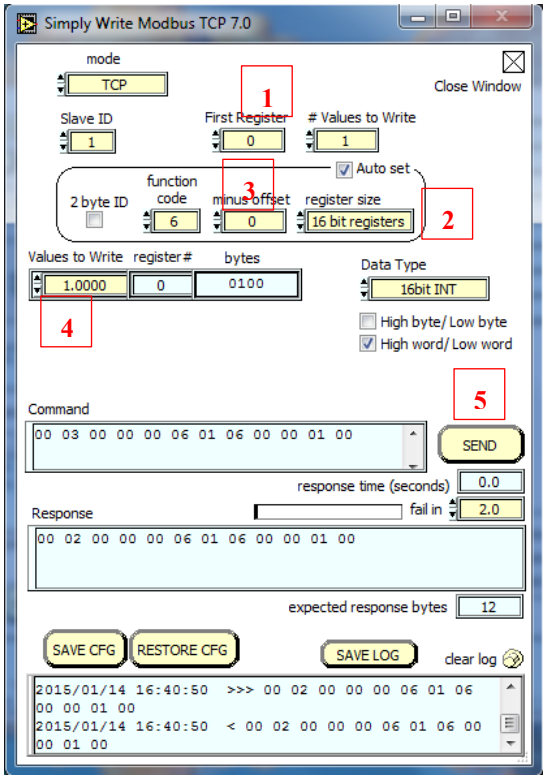

Figure 71: Simply Write Modbus Screen

Write To HMI

- Reference figure above and click the write command in the Simply Modbus main window.
- Select the first register value as “0” **(1)**.
- Select the data type as 16-bit INT **(2)**.
- Set the minus offset to “0” **(3).**
- Write the value as “1” in register number “0” **(4)** and hit SEND **(5)**. The unit will begin to run if the network run command enable is enabled. If the network run command enable is off/disabled, the network run command will be ignored.
- Sending “0” in the same command will stop the unit.
- The changes can be observed in the main window.

***Note**: HGA unit will only respond to network run command if the network run command enable is enabled via the HGA unit’s HMI setup screen. See setup screen documentation in **Section 7** for information on how to enable the network run command. The network run command enable can only be enabled via the HMI on the HGA unit.*

12.0 Appendix C: ModbusRTU Master

Introduction

The HGA Modbus RTU network communication interface transmits and receives command and status data from the HGA HMI display to a connected Modbus master over a RS-485 serial link. ModbusRTU is a simple serial communications protocol originally developed by Modicon for use with Programmable Logic Controllers (PLCs) in control of industrial devices. ModbusRTU is commonly supported by most PLCs and is an open, royalty-free communications standard.

Wiring and Configuration

The HGA implements a ModbusRTU slave device, which can be accessed by a connected ModbusRTU master that supports two wire RS-485 signal levels. The HGA HMI communication port used for the Modbus RTU interface is COM3. The COM3 serial connection header is shared with the COM2 port. The COM2/COM3 port is located on the back of the HMI display.

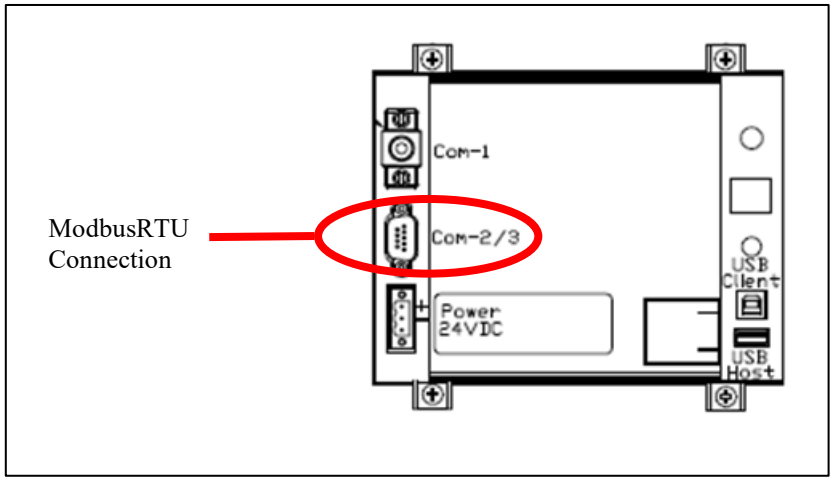

Figure 72: Modbus RTU Connection

The hardware pinout for the HMI COM3 port and the default settings are shown below.

Table 53: HMI COM3 Port Pinout and Default Settings

COM2/3 DB9 Pin	Signal Name	Signal Type
1	no connect	-
2	no connect	-
3	no connect	-
4	D+	RS-485 B (non-inverting)
5	GND	RS-485 SC/G
6	no connect	-
7	no connect	-
8	no connect	-
9	D-	RS-485 A (inverting)

The default protocol settings for the RS-485 ModbusRTU interface on COM3 are show below.

Table 54: RS-485 ModbusRTU interface on COM3 Default Settings

Parameter	Default Value	Units
Baud Rate	19200	bps
Data Bits	8	bits
Stop Bits	1	bits
Parity	Even	-
Slave ID	113	-

The default settings can be modified via the HMI system menu. Please reference *the HMI Modbus RTU COM Change Instructions* at the end of this document to change the default protocol settings.

Example Application Using "Simply Modbus Master 7.2.1"

The ModbusRTU network interface COM3 port is configured for RS-485 signal levels. The following example uses an RS-485 to USB converter to connect the HGA HMI to a laptop PC running the ModbusRTU master application. The picture below shows an example "B&B SmartWorx, Inc" Model, USPTL4 model RS-422/485 to USB converter.



Figure 73: B&B SmartWorx, Inc Model: USPTL4 model RS-422/485 converter

Example Setup Instructions to Read Data from the HGA Unit:

- Connect the cable to COM2/3 on back of HMI
- Connect USB end to the computer
  - Determine the assigned COM port number for the RS-485 to USB converter using the computer device manager control panel.
  - The converter used in this example typically enumerates between the range of COM5 to COM20 on a standard laptop computer running the Microsoft windows operating system.
- Configure the computer COM port settings to match the default settings used by the HGA HMI COM3 port listed above (baud, parity, stop bit(s), slave ID, etc...)
- Open the Simply Modbus Master software
  - Can be downloaded from the link below:
  - http://www.simplymodbus.ca/manual.htm
  - The trial version of the software is free and fully functional for this task hence no License key is necessary
- Next, configure the fields in the screen as shown below. These are again the default settings of the HMI COM3 port.
  - ***Note:*** *The "notes" sections of the display data registers are filled in manually*

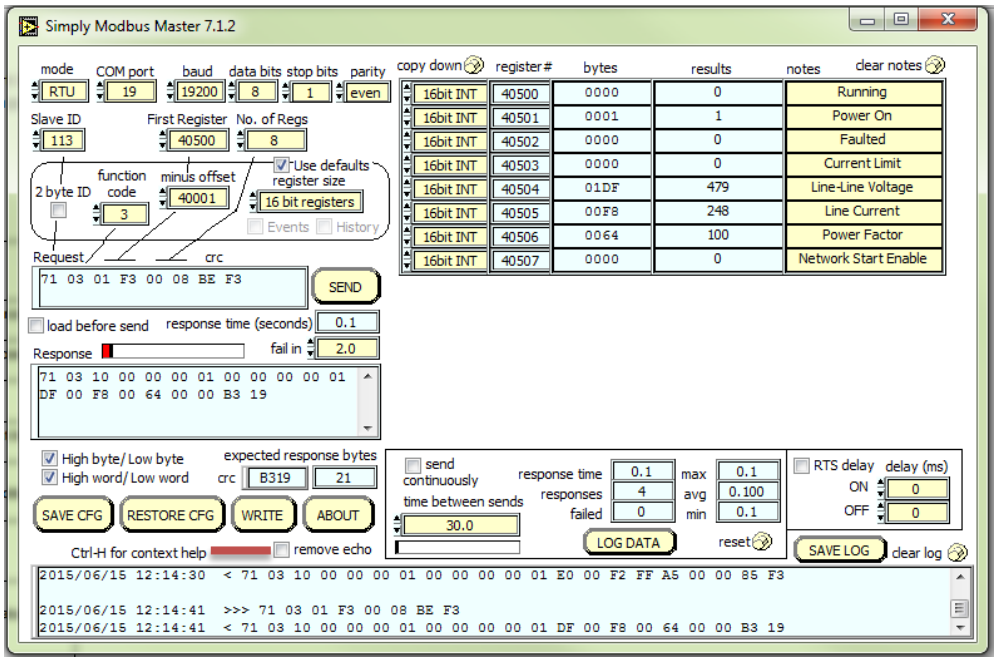

- Select the “SEND” button and the data available on the network will be displayed.
    - Start and stop the unit using the HMI to see the changes in the fields.

Example Setup Instructions to Write Data to the HGA Unit:

- In order to start/stop the unit, first the “Network Start Enable” parameter must be enabled on the HMI manually.
    - Navigate to the Tech Setup page and then select the “Run/Stop Control Setup” button.
    - Select the “Network Start En” button. It will turn green and say, “Network Start”.
- Next, select the “WRITE” button on the screen shown above.
- The screen below will be shown. Configure the fields as shown in the picture.

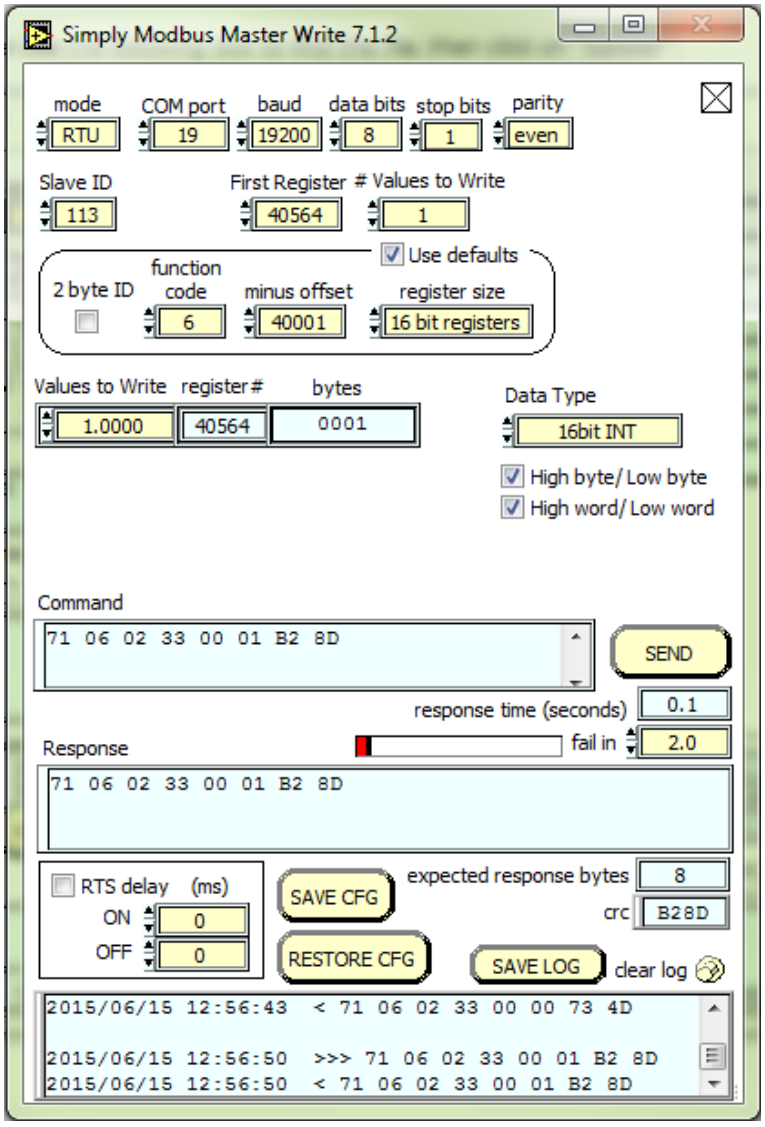

- Select “1” in the field “Values to Write” to turn the unit ON or “0” to turn the unit OFF.
- Verify via the HMI that the unit is receiving commands by going to the screen shown below.

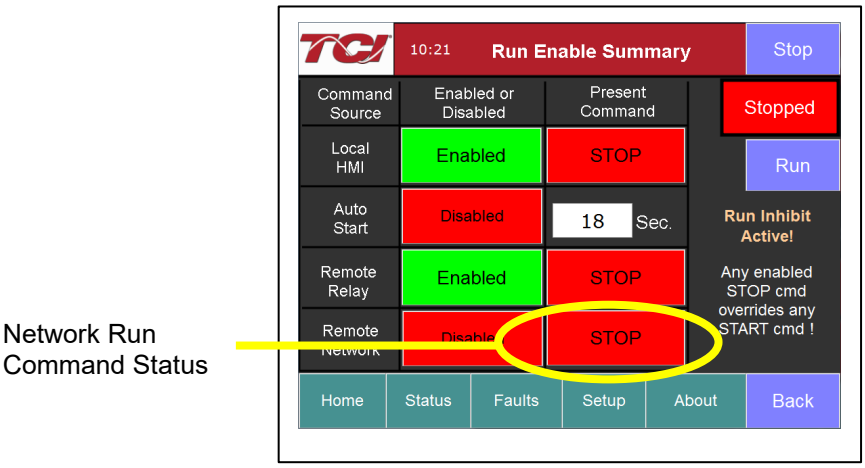

Figure 74: HGA with Remote Network Enabled

- This can be accomplished by selecting the “Status” page on the bottom of the screen, choosing the blue “Converter” button, and selecting “Run Enable Summary”.
- The figure above displays the unit with the Remote Network enabled and the converter in the Off state. The status indicator of the “Remote Network” in the “Present Command” column will echo the start/stop command from the Simply Modbus ModbusRTU master.

13.0 Appendix D: DeviceNet Gateway Option

Introduction

DeviceNet is a node priority-based communication protocol. Each device on the network has a node address. To write/read data, terminal node addresses needs to be programmed into the devices.

The DeviceNet network Communications Gateway translates command/status data to/from the HMI Display's integrated network interface from the ModbusRTU protocol to DeviceNet. The DeviceNet Communications Gateway is implemented using a third party, industry leading DeviceNet solution from HMS Anybus Communicator Product Line (Anybus Communicator AB7007).

Table 55: DeviceNet Communications Gateway Key Features

Features	Description
Profile Support	I/O Slave messaging: Bit strobe, Polling, Cyclic, COS, Explicit Messaging
Connection	Multi-drop to up to 31 nodes
Galvanic Isolation	Standard for both bus side and serial side
Application Interface	RS232, RS422, RS485
Baud Rate	125, 250, 500 Kbit/s
Protocol Conformance	CE, UL & cUL marked

Wiring

Pin	Signal	Description
1	V -	DeviceNet bus power, negative supply voltage
2	CAN L	Can L bus line
3	Shield	Cable shield
4	CAN H	CAN H bus line
5	V +	DeviceNet bus power, positive supply voltage



Figure 75: DeviceNet TCP/IP Connector Pinout

Connection of the HarmonicGuard® Active filter Interface Module to the end user's upstream DeviceNet network occurs at the DeviceNet connection on the Communications Gateway. The Communication Gateway is mounted on the back panel of the Interface Module.

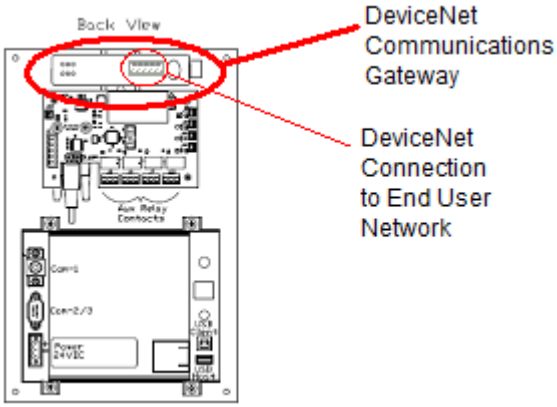

Figure 76: DeviceNet TCP/IP Communications Gateway Location

Configuration

To configure the DeviceNet gateway on the DeviceNet network a node ID needs to be configured on the DeviceNet. The node address can be assigned by setting the configuration switches on the Anybus as shown in the image



Figure 77: Anybus Configuration Switches

The values of the switches represent are listed in the table below:

Baudrate	sw. 1	sw. 2
125k	OFF	OFF
250K	OFF	ON
500K	ON	OFF
(reserved)	ON	ON

Mac ID	sw. 3	sw. 4	sw. 5	sw. 6	sw. 7	sw. 8
0	OFF	OFF	OFF	OFF	OFF	OFF
1	OFF	OFF	OFF	OFF	OFF	ON
...	...	...	...	...	...	...
62	ON	ON	ON	ON	ON	OFF
63	ON	ON	ON	ON	ON	ON

Figure 78: Anybus Switch Values

After a node address has been assigned, the gateway can be connected to the DeviceNet network by using RSNetworks for DeviceNet devices.

The EDS file for the DeviceNet Communications Gateway is available via TCI technical support (direct dial: 414-357-4541, email tech-support@transcoil.com) or from the TCI website (http://www.transcoil.com/Support.htm)

For advanced configuration options, reference the HMS Anybus Communicator Serial DeviceNet Gateway User Manual available on the HMS website (www.hms.se)

Operation

The Communication Gateway has six LED indicators that show the current status of the Modbus TCP/IP and sub-network communications. The meanings of the LED indicators are described below.

Table 56: DeviceNet TCP/IP Gateway LED Diagram

Number	State	Status	
1- Network Status	Off	Not powered / not online	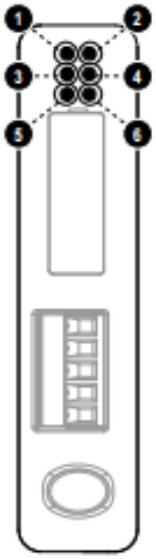
	Green	Link OK, online, connected	
	Green, flashing	Online, not connected	
	Red	Critical link failure	
	Red, flashing	Connection timeout	
2 – Module Status	Off	No power to device	
	Green	Device operational	
	Green, flashing	Data size bigger than configured	
	Red	Unrecoverable fault	
	Red, flashing	Minor fault	
3 – Not Used	n/a	n/a	
4 – Not Used	n/a	n/a	
5 – Subnet Status[a]	Off	Power off	
	Green	Running	
	Green, flashing	Running correctly, but one or more transaction errors have occurred.	
	Red	Transaction error/timeout or subnet stopped	
6 – Device Status	Off	Power off	
	Alternating Red/Green	Invalid or missing configuration	
	Green	Initializing	
	Green, flashing	Running	
	Red	Bootloader mode[b]	
	Red, flashing	If the Device Status LED is flashing in a sequence starting with one o more red flashes, please note the sequence pattern and contact the HMS support department.	

HMS Gateway Example:

HMI slave connected through Anybus Gateway to a DeviceNet network. The end node for this setup is a DeviceNet Scanner that is connected to a ML1500 PLC.

Hardware Requirements

- HMI display Anybus gateway assembly
- 1770 Allen Bradley KFD with respective serial cable
- 1769 DeviceNet Scanner
- Bus terminator cap
- MicroLogix 1500 PLC
- DeviceNet cables
- LED Network for Output display

Software Requirements

- Anybus configuration manager
- RSLinx classics
- RSNetworx
- RSLogix 500 (Micro)

Setup

- Connect Anybus gateway on the HMI assembly using a DeviceNet cable to the 1770 Allen Bradley KFD.
- Connect the 1770 Allen Bradley KFD to the 1769 DeviceNet Scanner using another DeviceNet cable.
- Attach the 1769DeviceNet Scanner to the ML1500 PLC using the pin header present on the scanner; similarly attach the bus terminator cap to the other end of the scanner to finalize PLC assembly.

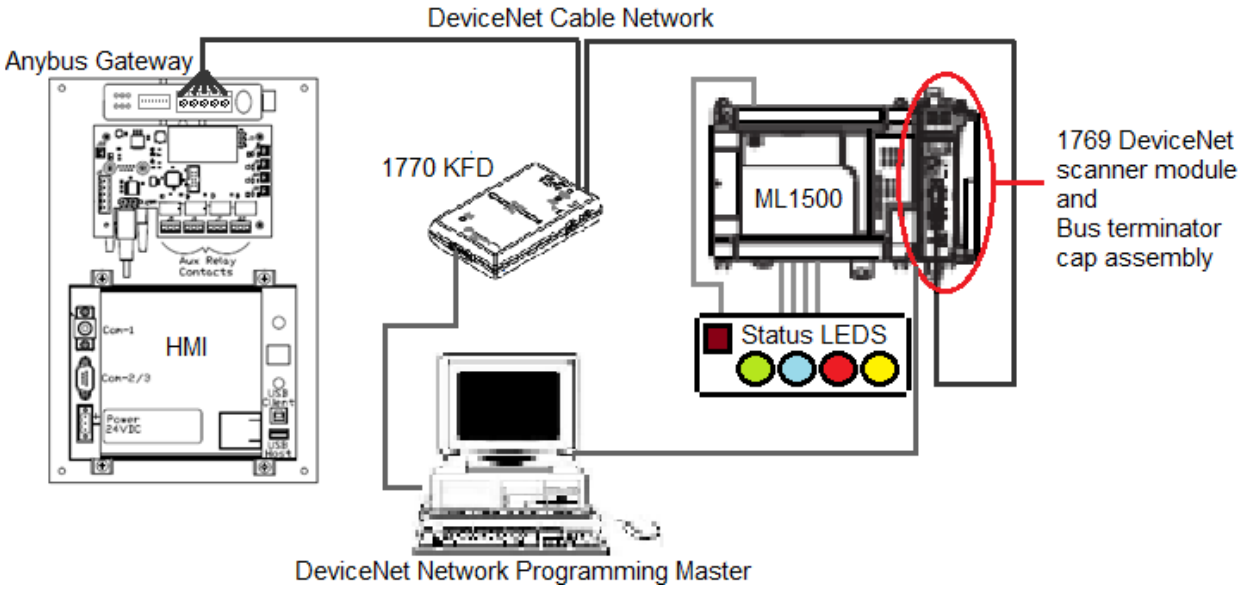

Figure 79: DeviceNet Network Setup

Establishing Correct Network Settings

The baud rate and node address are two important aspects of DeviceNet network, a mismatch in baud rate or a clash of node addresses will produce a red network status LED on the DeviceNet devices. The baud rate and node address for the three network devices can be set as following:

1. *Anybus Gateway* – The gateway is equipped with 8 switches, as described in the appendix DeviceNet network section. These switches can be manipulated, as descried to match network baud rate and provided the gateway with a distinct node address.
2. *1770 KFD* – The network settings and node address for the KFD are set in RSLinx. The RSLinx software is used to obtain nodes in a network. The KFD provides RSLinx the access to the DeviceNet network nodes.
3. *1769 DeviceNet Scanner* – The network and baud rate settings for the scanner are given on page 40 of the DeviceNet Scanner Module (http://literature.rockwellautomation.com/idc/groups/literature/documents/um/1769-um009_-en-p.pdf).

   Once the corrected baud rate and individual node addresses are assigned for the devices on the network, the network and module LEDs on each device should be green.

RSLinx Classics Settings

- In RSLinx a new network is defined by click on the communications and then the configure drives option.
- From the menu that appears, select the 1770KFD DeviceNet option to view all devices on the DeviceNet network.
- Once selected, a window will appear with the Serial port and DeviceNet port settings drop down menus.
- Select the Serial port as listed in Device Manager in the windows control panel. The data rate for the Serial port can be specified to 19200.
- For DeviceNet node address, pick an address not assigned to the Anybus Gateway or the DeviceNet scanner to avoid address conflict.
- The data rate is selected to 250K for this example.
- The same data rate is set in the Anybus Gateway through the switches present on the Gateway and in the Scanner through the ML1500 PLC.
- Once OK is hit, the KFD will access the network, once connected a box will appear to name the network. (This means the connection is successful).
- By clicking on the network in the RSLinx main window, the software automatically populates the right window panel with active devices on the network.
- Similarly, for the ML1500 PLC the RS232 option is selected in the Configure Drivers screen drop down menu.
- Once the PLC is found, it can be used in RSLogix to program the DeviceNet scanner and establish a ladder diagram for the LED status display.
- Like the PLC, RSNetworx uses the 1770KFD network to changes properties on the Devices found on the DeviceNet network.

RSNetworx

- In RSNetworx, the first step is to open tools and follow the EDS wizard option. The EDS wizard is used to load the EDS file for the Anybus Gateway on the RSNetworx database. The EDS file will be provided in the Anybus Gateway CD.
- Next, go to the network option and select online.
- In the window that appears, select the DeviceNet network setup in RSLinx.
- The software will populate the devices online on the graph window of RSNetworx.
- Once all devices are on the network without errors and the network is online, right click on the 1769 SDN. Then, go to properties.
- A new window will appear, go to the scanlist tab.
- Move the Anybus Communicator from the Available Devices to the Scanlist.
- Then, click on the Anybus Communicator under the scanlist section.
- Once the Anybus option is highlighted, click on Edit I/O Parameters button in the same window.
- A new window will appear, check the "Polled" option.
- Enter the input size as 16 Bytes and the output sizes 2 Bytes.
- The Bytes sizes are as defined in the Anybus Configuration manager.
- Hit “Ok” and click “Yes” on the next two windows that appear.

- Click on the Module tab of the 1769 SDN scanner Module window.
- In the platform drop down menu, select MicroLogix.
- Keep slot as 1.
- Proceed to the Input tab of the 1769 SDN scanner module window.
- Note, that the registers 0-65 are read-only.
- Therefore, the Anybus data is saved in the registers 66-73 each register being 16 bits.
- Similarly, in the output tab, the first 2 registers are read-only. The 3rd register will say Anybus Communicator, meaning that the Anybus data is redirected and mapped to that register in the 1769 SDN.
- Once set, click on “Apply” and then click “OK”.
- The 1769 DeviceNet Scanner is now also set for proper communication with Anybus Communicator.

RSLogix

- RSLogix is used to program the ML1500 PLC. Once in RSLogix, a new file is created and the PLC ML1500 revision C is selected in the list of compatible PLCs.
- The “Who Active” option is used to connect the live PLC to the software.
- In RSLogix, the IOConfiguration option present on the left panel is selected.
- A new window will open, from the list of items present on the right panel, select the 1769 DeviceNet Scanner.
- Once selected, the DeviceNet Scanner should move to spot 1 in the left panel of the window, given that no other I/O modules are attached to the PLC.
- Click on the ReadI/O option. The program will try to read the IO profile of the DeviceNet scanner once found a message box confirming the same will appear.
- In the IOConfiguration screen click on the Adv. Config option present on the bottom left.
- In this option, the Input and Output words can be selected for the Scanner. Select 73 Input words and 3 Output words.
- The first 65 input words are reserved; the words 66-73 are used to store the HMI data coming in from the Anybus Gateway. Similarly, the first 2 output words are reserved leaving 1 word for HMI data.
- The Input and Output data files present on the left panel of the RSLogix software hold the DeviceNet Scanner register values.
- The reserved word definitions can be looked at in the scanner manual, they serve as status bits. The output bit O: 1.0 is the run bit for the scanner and can be toggled in the output data file.
- Once the data files are understood, the PLC is put into run mode and the data from the HMI can be seen in the IO data files.
- Based on this information, the below ladder diagram was built to observe the HMI status and report it though the DeviceNet network on a LED status setup.

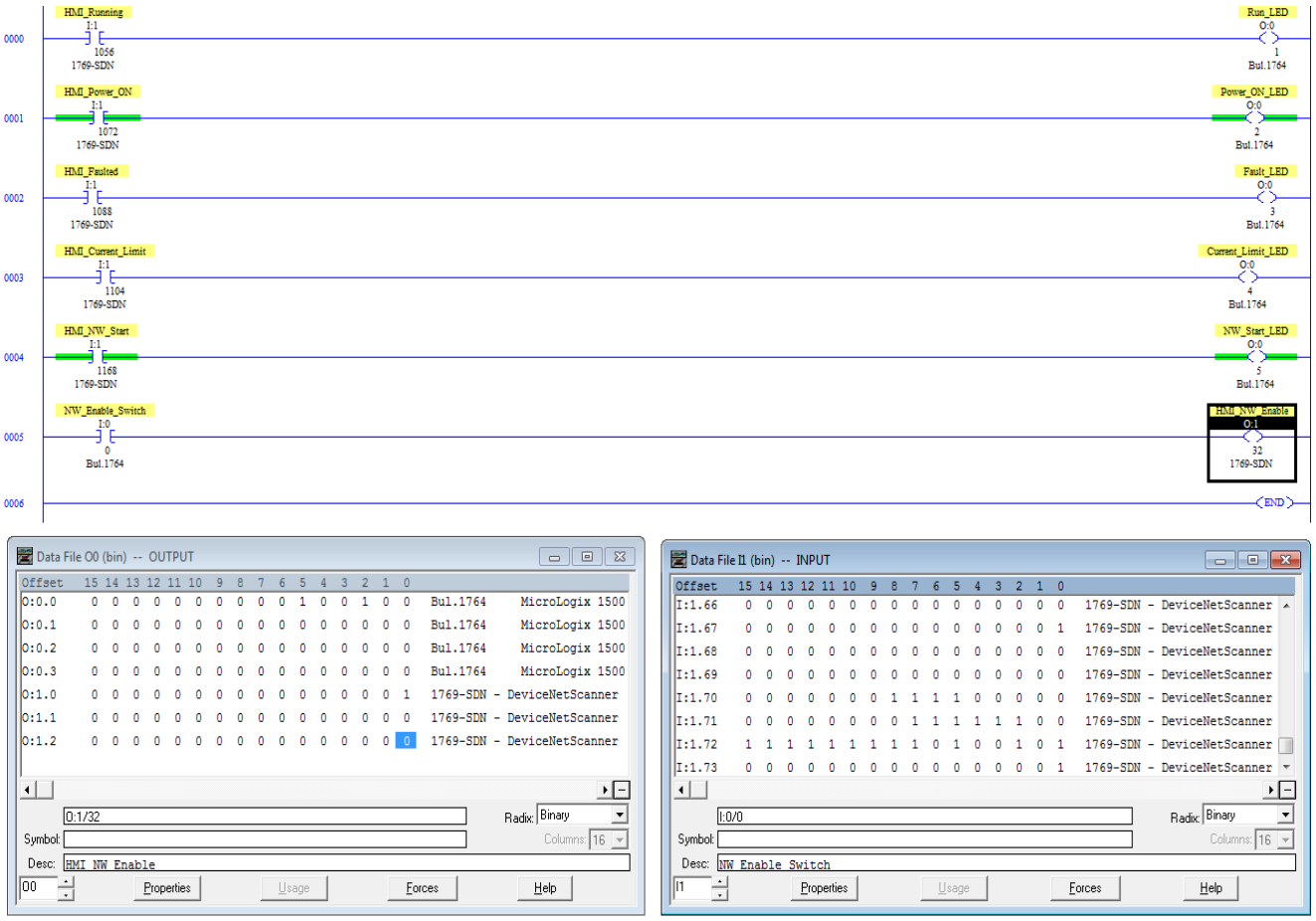

Figure 80: Ladder Diagram Observing HMI Status

14.0 Appendix E: Operating the HGA in a 3R Enclosure

Warning 	Be sure to read, understand, and follow all safety instructions.
Warning 	Only qualified electricians should carry out all electrical installation and maintenance work on the HarmonicGuard® Active (HGA) filter.
Warning 	All wiring must be in accordance with the National Electrical Code (NEC) and/or any other codes that apply to the installation site.
Warning 	Disconnect all power before working on the equipment. Do not attempt any work on a powered HGA filter.
Warning 	The HGA filter and other connected equipment must be properly grounded.
Warning 	The HGA filter may receive power from two or more sources. 3-phase power is connected to the main input terminals of the HGA filter. All these sources of power must be disconnected before working on the HGA filter.
Warning 	After switching off the power, always allow 5 minutes for the capacitors in the HGA filter and connected equipment, if applicable, to discharge before working on the HGA filter, associated equipment, or the connecting wiring. It is good practice to check with a Voltmeter to make sure that all sources of power have been disconnected and that all capacitors have discharged before beginning work.

Introduction

The HGA is available in a rugged 3R enclosure that makes it suitable for use in demanding environmental conditions. Standard status indicator lights have been placed on the exterior of the enclosure to accommodate the physical characteristics and requirements of a 3R enclosure. Refer to the table below for a legend of the indicator lights and their function. Our 3R enclosures are also provided with an exterior diagnostic port to connect to an optional portable HMI.

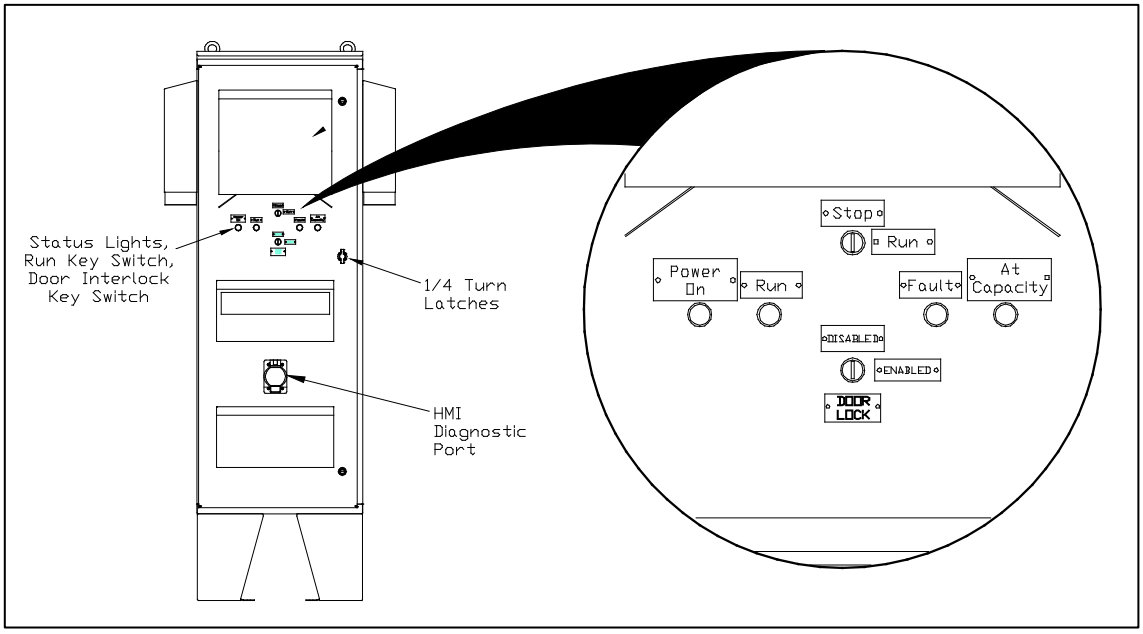

Figure 81: 3R Indicator Lights

Table 57: HGA-3R Indicator Lights

HGA 3R Indicator Light	Description
Power On	Indicates if the HGA filter has input power available.
Run	Indicates if the HGA filter is currently running or in the idle state.
Stop	Turn the key to the stop position to turn off the HGA unit power converter. If the HGA unit is faulted, turning the key to the stop position also resets the unit fault.
Run	Turn the key to the run position to enable HGA unit power converter.
Fault	Indicates if the HGA filter is faulted.
At Capacity	Indicates if the HGA filter is running at its maximum capacity.
Door Lock	Locks Cabinet Door.

HGA-HMI Operation

Connect the HGA-HMI connection port to the HMI diagnostic port using the 9-pin serial cable provided. When the HGA-HMI unit boots up follow the Quick Start guide appropriate for your HGA model.

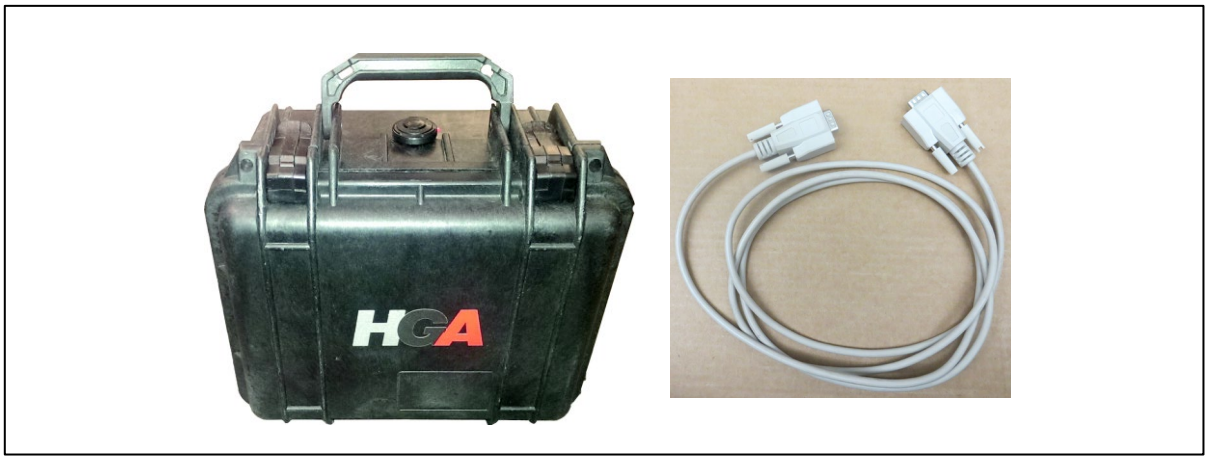

Figure 82: HGA HMI and Connection Cord

15.0 Appendix F: BACnet Gateway Option

Introduction

The BACnet-to-Modbus Communication Gateway translates command/status data to/from the HMI Display's integrated network interface from the Modbus RTU protocol to BACnet. The BACnet Communication Gateway is implemented using a third party, industry leading BACnet solution from HMS Anybus Communicator Product Line (Anybus Communicator 024090-B).

Table 58: BACnet Communications Gateway Key Features

Feature	Description
Connection	10/100 MBit twisted pair RJ45 Connection
Galvanic Isolation	Transformer isolated Ethernet interface
TCP/IP Settings	Web Browser Based Configuration
Baud Rate	10/100 MBit auto detect
Protocol Conformance	Conforms to ASHARE 125-2004, Annex J, B-ASC Profile

Wiring

Connection of the HarmonicGuard® Active filter Interface Module to the end user's upstream BACnet network occurs at the RJ45 connection on the Communications Gateway. The Communication Gateway is mounted on the pack panel of the HMI Interface Module.

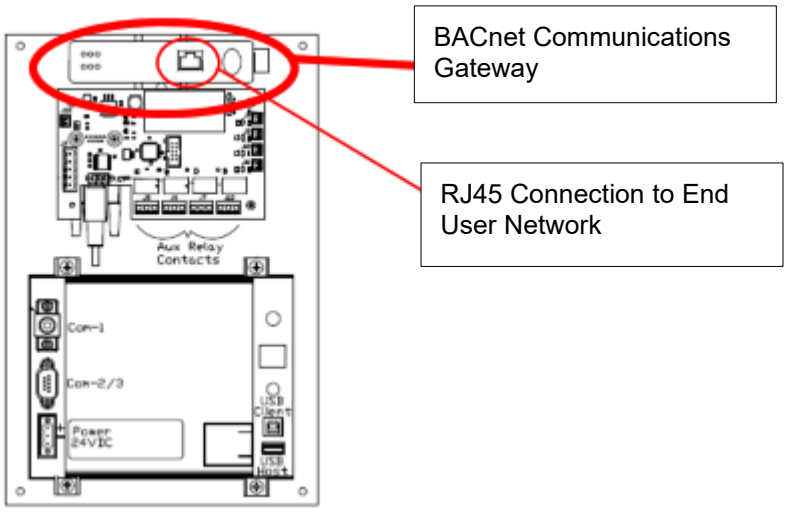

Figure 83: BACnet Communications Gateway Location

Configuration

To configure the IP address of the BACnet communications gateway, connect gateway to the BACnet network. Then, open a web browser window and type in the default IP address of the gateway and press enter. The Communications Gateway configuration page should load. Open the Configure tab.

Table 59: Gateway Default Settings

Setting	Default Value
IP Address	192.168.0.1
Gateway	255.255.255.0
Subnet	255.255.255.0



Figure 84: BACnet Gateway Configuration Page

- If Java is not installed, follow the link at the bottom of the “Configure Page” to install it.
- The default user name and password are both “admin”.
- The IP Address can now be modified and saved.
- Reboot the gateway to finalize the change.
- The IP Address can be reset to the Anybus default of 192.168.92.68 using the recessed reset button on the Anybus gateway.

Register Map

For a description of the input and output data available over the network interface, see **Section 6** in this user manual.

HMS Gateway Example

HMS Gateway to BACnet Master Example

HMI slave connected through Anybus gateway to BACnet Master:

Required Equipment:

- Anybus gateway programmed with TCI Anybus configuration
- HMI display connected to Anybus gateway
- Ethernet RJ45 cable
- **Y**et **A**nother **B**ACnet **E**xplorer (Yabe) software

Set-Up

- Connect PC to BACnet/IP port on Anybus gateway using RJ45 cable.
- Ensure PC is on the same subnet as the Anybus gateway.

Programming

- In our example, the BACnet master is Yabe.
- Click “Add Device” (search). This is the green plus. (1)
- In the new window, click “Add” in the BACnet/IP over Udp section. The gateway will appear as the serial number of the HGA unit. (2)
- Select the gateway to display the available properties. (3)
- Right click on ANALOG_INPUT:1 and click “Subscribe.” Note that the name of the property changes to SYS_RUNNING. (4)
- Subscribe to ANALOG_OUTPUT:32 (SYS_NW_START_IN). (5)
- While keeping SYS_NW_START_IN selected under “Address Space,” the “Present Value” can be changed in “Properties.” Change the value to “1” and press enter. The unit will begin to run if the network run command enable is enabled. If the network run command enable is off/disabled, the network run command will be ignored. (6)
- Changing the same value to “0” will stop the unit.
- The changes will appear in the “Subscriptions” window. SYS_RUNNING will have a value of “1” while the unit is running and “0” while the unit is not running.

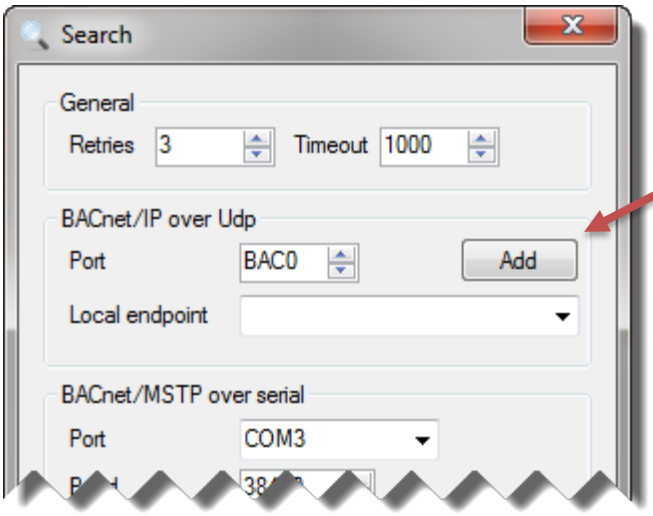

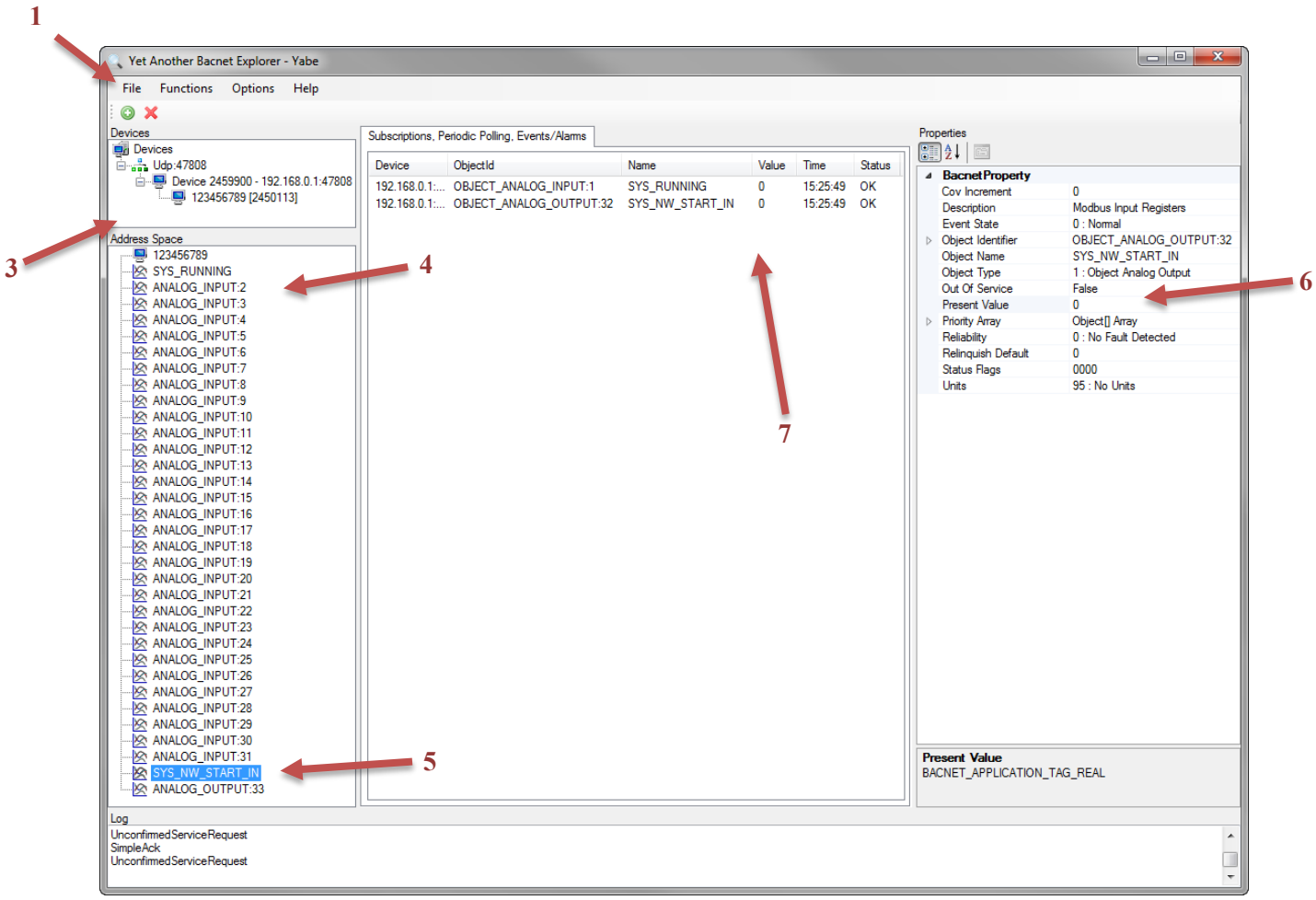

Note: *HGA unit will only respond to network run command if the network run command enable is enabled via the HGA unit's HMI setup screen. See setup screen documentation in* **HMI Set-**

Up Instructions ***on page 70*** *for information on how to enable the network run command. The network run command enable can only be enabled via the HMI on the HGA unit.*

16.0 Appendix G: HMI Modbus RTU COM Change Instructions

This document will outline to the user how to change the communication settings for the Modbus RTU protocol enabled via COM3 on the HMI.

NOTE: On the HMI, COM2 and COM3 share the same physical port, which is labeled COM2.

On the 'Network' page (Setup -> Tech Setup -> Tech Setup+ -> Network Setup) you can see the current settings of the port. When selecting 'HMI Settings' and attempting to change these, you will be prompted to call TCI. This document is intended to explain the process for changing those settings once TCI has been contacted.

NOTE: The text displayed on the 'Network' screen will not change as it is static.

1. Go back to the 'Tech Setup+' screen and select 'HMI System Menu'.
2. Select 'System Settings' in the top left corner. Using the arrows scroll to the 'COM Port' tab.
3. Tap the screen and it will turn blue and a new set up commands will show up on the bottom. Using the left/right keys, Select COM Port: 3.
4. Now using the arrow keys you have access to all the settings for the Modbus RTU protocol. Change them to your preferred settings. The Comm. HMI Station is the slave ID of the device. It is defaulted from TCI to be '113'.

A screen shot of the default settings for COM3 is shown below for reference.



TCI, LLC
W132 N10611 Grant Drive
Germantown, Wisconsin 53022

Phone: 414-357-4480
Fax: 414-357-4484
Helpline: 800-TCI-8282

Web Site: http://www.transcoil.com

©2020 TCI, LLC All rights reserved

Publication No: 26030
Effective: 06/12/2020 Version: P

Startup Comments	
Date	5/19/2021
Completed By	DM
1	Power Factor + Harmonic Enabled
2	Auto start enabled
3	Power Factory Corrected to 1.0
4	Harmonics Reduced ITHD 16.5% → 5.1%
5	VTHD = 2.6%
6	Running, Fault/Hi Temp + Max Capacity
7	Confirmed w/ Eagle
8	Unit Operational + Running
9	
10	
11	
12	
13	
14	
15	
16	
17	
18	
19	
20	

Tested By:	Dario Morales		Great Rock Automation
	Name	*Signature*	*Organization*
Witnessed By:	Bob Herrmann		Hinck Electric
	Name	*Signature*	*Organization*
Witnessed By:	William Whitaker		Wood
	Name	*Signature*	*Organization*

1	**Installation Checklist**	**Pass**	**Fail**	**N/A**
1.1	Make sure that the installation location will not be exposed to excessive vibration, corrosive or combustible airborne contaminants, excessive dirt, or liquids.	✓		
1.2	Select a mounting area that will allow adequate cooling air flow and maintenance access.	✓		
1.3	Make sure that all wiring conforms to the requirements of the National Electrical Code (NEC) and/or other applicable electrical codes.	✓		
1.4	Connect the HGA filter equipment-grounding lug to the system ground of the premises wiring system. Use a properly sized grounding conductor.	✓		
1.5	Connect 3-phase power to the input terminals of the HGA filter, L1, L2, & L3.	✓		
1.6	Ensure that the CTs are properly installed and connected to the proper terminals inside the HGA filter (see CT Installation section of IOM Manual).	✓		
1.7	Check everything thoroughly before applying power to the equipment.	✓		
1.8	Check the panel and the inside of the enclosure for any foreign objects, dirt, or loose hardware.	✓		

2	**Mounting**			
2.1	The HGA must be mounted vertically on a smooth, solid surface, free from heat, dampness, and condensation. Refer to the applicable installation drawing for clearances.	✓		

3	**Wiring**			
3.1	**Cable Entry Locations**			
3.1.1	The enclosed HarmonicGuard® Active filters are not provided with enclosure wiring knockouts, however, a removable wire entry plate is provided. A selection can be made at the time of installation. Typical or recommended cable entry locations are shown in the drawings shipped with the unit.	✓		

3.2	Circuit Breaker	Pass	Fail	N/A
3.2.1	For HGA units provided with an internal circuit breaker, see tables below for field wiring terminal wire size and tightening torque information. For circuit breaker selection recommendations on HGA units provided without a circuit breaker, please reference the Circuit Breaker Selection. The Circuit Breaker Selection contains tables of acceptable 65kAIC and 100kAIC circuit breakers from various manufacturers.	✓		

3.3	Field Wiring Connection Terminals	Pass	Fail	N/A
3.3.1	Compression type terminals are provided for all field wiring connections. The wire size (75° C copper) capacity ranges and tightening torque for the grounding and power terminals are listed in the tables that follow. Refer also to the drawings and other information shipped with the unit. A means to disconnect is the responsibility of the customer.	✓		

Table 3: 480 V - Power Terminal Wire Size Capacity Range and Tightening Torque for Active Filter Ground Lug

Filter Size		Ground Lugs		
480 V Units	600 V Units	Wire Size*	Torque In-Lbs. (Nm)	Wire Type
45A to 100A	39A	6 AWG - 2/0	50 (5.7)	CU/AL
150A	110A	6 AWG - 2/0	50 (5.7)	CU/AL
200A	150A	6 AWG - 250 MCM	375 (42.4)	CU/AL
250A	185A	6 AWG - 250 MCM	375 (42.4)	CU/AL
300A	220A	3 AWG - 500 MCM	375 (42.4)	CU/AL
350A	260A	(2) 4 AWG - 600 MCM	500 (57)	CU/AL
400A	300A	(2) 4 AWG - 600 MCM	500 (57)	CU/AL
500A	370A	(2) 4 AWG - 600 MCM	500 (57)	CU/AL
600A	450A	(3) 2 AWG - 600 MCM	500 (57)	CU/AL
700A	520A	(3) 2 AWG - 600 MCM	500 (57)	CU/AL

***Note**: Wire size range listed is for lug as per lug manufacturer. Follow NEC guidelines for sizing ampacity of power conductors.*

Table 6: Power Terminal Wire Size Capacity Range and Tightening Torque for Active Filter Models with ABB Circuit Breakers

Filter Size		MFG	Breaker IC	CB Power Terminals		
480 V	600 V			Wire Size*	Torque In-Lbs. (Nm)	Wire Type
45A to 50A	39A	ABB	65/100 kA	14 - 1/0 AWG	50.4 (5.7)	CU/AL
90A to 100A	78A	ABB	65/100 kA	14 - 1/0 AWG	50.4 (5.7)	CU/AL
150A	N/A	ABB	65/100 kA	4 AWG - 300 MCM	200 (22.6)	CU/AL
200A	150A	ABB	65/100 kA	4 AWG - 300 MCM	200 (22.6)	CU/AL
250A	185A	ABB	65/100 kA	(2) 3/0 - 250 MCM	274 (31)	CU/AL
300A	220A	ABB	65/100 kA	(2) 3/0 - 250 MCM	274 (31)	CU/AL
350A	260A	ABB	65/100 kA	(2) 3/0 - 500 MCM	274 (31)	CU/AL
400A	300A	ABB	65/100 kA	N/A	N/A	N/A
500A	370A	ABB	65/100 kA	N/A	N/A	N/A

***Note**: Wire size range listed is for lug as per lug manufacturer. Follow NEC guidelines for sizing ampacity of power conductors.*

3.4	**Connection Diagram**	**Pass**	**Fail**	**N/A**
3.4.1	The figure below shows the typical wiring connections between the models of the HGA and the load. Refer to the drawings furnished with the unit for more specific information.	✓		
3.4.2	Connection diagrams in this section are representative. For the latest connection diagram, please see the TCI website for the 25027-1 208-480 V connection diagram, the 28425 600 V connection diagram, and the HMI and network connection diagram 28283-1.	✓		
3.4.3	The input 3-phase AC Voltage source must be connected in a positive ABC phase rotation from L1-L2-L3 for correct unit operation.	✓		

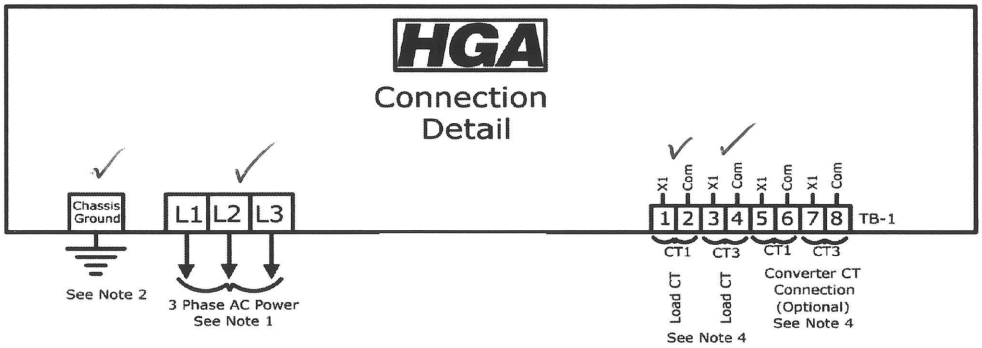

Notes:

1. Wiring should be 75° C or higher insulated copper, with the appropriate Voltage and current rating.
2. Chassis ground must be connected to the ground of the premises wiring system, in accordance with NEC and local codes. Connection must be made using a wire conductor.

3. Terminal TB-I & J25 wire range is 30-12 AWG, tightening torque is 4.4 IN-LB (0.5 NM).
4. Operating current transformers with the secondary winding open can result in a high Voltage across the secondary terminals, which may be dangerous to personnel or equipment.

4	**Current Transformer Installation**	**Pass**	**Fail**	**N/A**
4.1	For accurate sensing of the load, it is important that the load sensing current transformers are properly installed.	✓		
4.2	It is necessary for the HGA to monitor the current in Phase "A" (L1) and Phase "C" (L3). Stand-alone HGA filters are designed for Line Side current transformer (CT) placement. It is important that both CTs are on the same side of the HGA. The CTs should be centered around the conductor. Optional Load Side CT placement is available for single units.	✓		
4.3	The polarity of the CT is important; the "H1" marking on the CT must face the source. The secondary windings of the CT around conductor L1 should connect to TB-1 terminals 1 & 2 and the CT around conductor L3 should connect to TB-1 terminals 3 & 4. The secondary wire of the CT identified as "X1" must connect to the "X1" terminal of TB-1 for both CTs. Failure to maintain the correct polarity and phasing will cause an over-current fault. If this should happen, refer to the troubleshooting section.	✓		
4.4	Note: Units with black "TB-1" terminal blocks are shipped with two position shorting jumpers installed between positions 1 & 2 and 3 & 4. This is done for safety and to prevent equipment damage. The jumpers are installed in the center of the block and can be identified by the gray top. After the load CTs are installed and wired, these jumpers must be removed for correct unit operation. They can be removed with a standard flat blade screwdriver.	✓		
4.5	Note: CT operation can be verified via the HMI touchscreen feedback waveform plot screens. Reference the HMI VLine & ILine Waveform Plot Sub Screen for details.	✓		

5	**Current Transformer Placement**	**Pass**	**Fail**	**N/A**
5.1	The exact CT placement is dependent on the HGA's configuration and size. Please refer to the following current transformer diagrams for the installation that applies to your configuration.	✓		
5.2	The HGA is factory configured for Line Applied/Master OR Load Applied/Slave operation. A line side unit wired with load side CT feedback or a load side unit wired for line side feedback will not operate correctly.	✓		

Table 14: CT Range by Model Size

Amps	Voltage	CT Min Ratio	CT Max Ratio	Notes
Up to 100	Up to 600 V	250:5	3000:5	
150	480 V	300:5	4000:5	
150	600 V	800:5	3000:5	
185	600 V	600:5	5000:5	
200	480 V	600:5	5000:5	
220	600 V	1000:5	4000:5	
250	480 V	600:5	5000:5	***Factory technician start up required to use CTs outside of the published range***
300	480 V	800:5	6000:5	
300 (2x150)	480 V	1000:5	4000:5	
300 (3x100)	480 V	800:5	5000:5	
350	480 V	800:5	6000:5	
370	600 V	1800:5	6000:5	
400	480 V	1800:5	6000:5	
500	480 V	1800:5	6000:5	
600	480 V	1200:5	6000:5	
700	480 V	1200:5	6000:5	

6	**CT Wire Recommendations**	**Pass**	**Fail**	**N/A**
6.1	If you want to extend your CT leads, there are four basic options:	✓		
	• Twisted - Our standard CT leads are twisted. Twisting is important for noise immunity, especially at 50-60 Hz.			✓
	• Shielded and twisted - Adding a shield—in addition to the twisting—can offer some additional noise immunity, especially for long extensions. Note: for best immunity to crosstalk, the wires should be twisted in pairs.			✓
	• Non-shielded and non-twisted - Most cables are twisted, so this normally only arises if you use two single conductors. We recommend against this for most applications, because there is very little noise immunity. This can work if the conductors for each CT are kept in close contact to minimize loop area and if the CT conductors are kept away from line (mains) conductors and in their own conduit or metal raceway.	✓		
	• Shielded but non-twisted - This is a bit unusual but does occur. There are two concerns with this type of cable. First, the shield primarily blocks high frequency interference, but not 60 Hz. 60 Hz is much better blocked by twisting the wires. 60 Hz interference is a big concern, because there is a lot of 60 Hz noise and it's the main frequency we are measuring. Second, because the wires are not twisted into pairs, there is a greater risk of crosstalk between CTs if you run more than one pair of CT wires in the same cable. If possible, use twisted pair cabling when extending CT wires.			✓

7	**CM Module Serial Cable Connection for Open Chassis Units**	**Pass**	**Fail**	**N/A**
7.1	The HGA units the communications module (CM) is a separate assembly for the main HGA active filter chassis. The CM module assembly contains the HMI touchscreen, communications interface PCB, and any optional network interface communications gateway included with the unit. For fully enclosed HGA units, the CM module is mounted to the enclosure door. On open chassis HGA units, the CM module needs to be mounted in the end user's enclosure, MCC section, or Electrical House panel.			✓
7.2	The CM module should be connected to the HGA power converter prior to apply power to the unit. The serial cable that connects the CM module to the power converter is packed with the CM module prior to shipment. One end of the serial cable is plugged into the communications interface PCB on the CM module. The other end of the communications cable is plugged into one or more power converters on the main active filter chassis.			✓
7.3	The CM module is packed as a loose part in the shipping materials of the active filter open chassis panel along with the serial cable used to connect the CM module to the power converter. See the figure below for the location of the J2 Chassis Communication Cable connection on the CM module.			✓

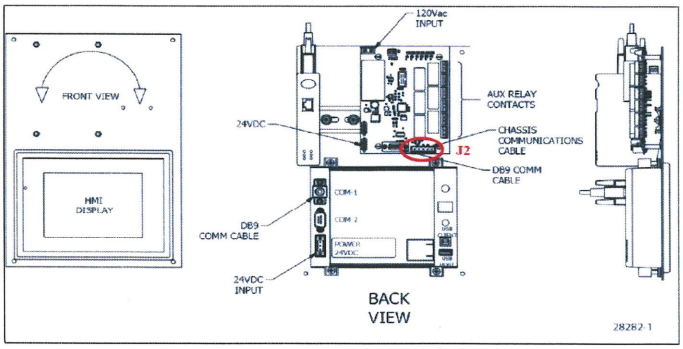

Figure 20: HGA CM Module with Chassis Communications Cable Serial Connector J2 Highlighted

Section 1.0 HGA Quick Start Unit Software Setup for HMI Revision I HGA IOM

Place a check mark next to each bullet point

1) Verify unit external connections

Note: *If unit is configured for load side operation, reference the User Manual for Load Side CT Placement diagram.*

- ✓ Phase A, B, C power connection, with positive A-B-C phase rotation expected
- ✓ CT H1 Terminal is pointing toward the source
- ✓ CT feedback on phases A & C to TB-1
- ✓ Leave CT shorting bars in place on TB-1
- ✓ With the HGA circuit breaker open, energize the source to the HGA
- ✓ Close the HGA circuit breaker
- ✓ Fans and HMI should come on in < 5 seconds
- ✓ HMI will start on Home screen
- ✓ Load(s) have an integral 5% line reactance or equivalent DC bus choke

Warning ⚠	Hazardous Voltages are present when unit is energized

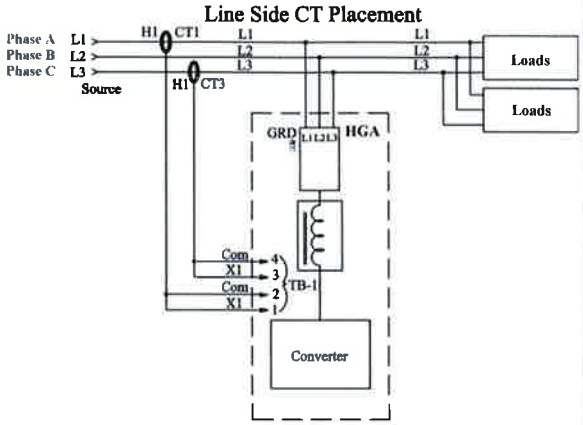

Note: Built-In Sensor Wiring Error Detection

- ✓ The active filter has an automatic sensor wiring error detection algorithm built into the controls.
- ✓ If a sensor wiring error is detected, please reference the Sensor Error Auto Detection section.

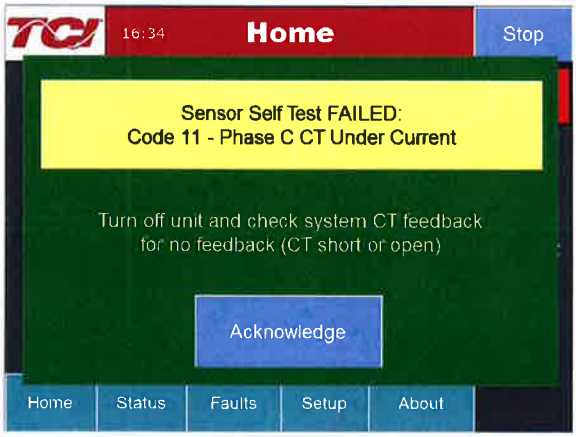

Note: Language Selection and Date / Time

- ✓ The active filter supports several languages including English, French and Spanish.
- ✓ Press "Setup" to navigate to Setup screen and press the "Language Setup" button.
- ✓ Select language setting from the language setup pop-up screen.
- ✓ Press the "Set Date and Time" button to change the configured system time.

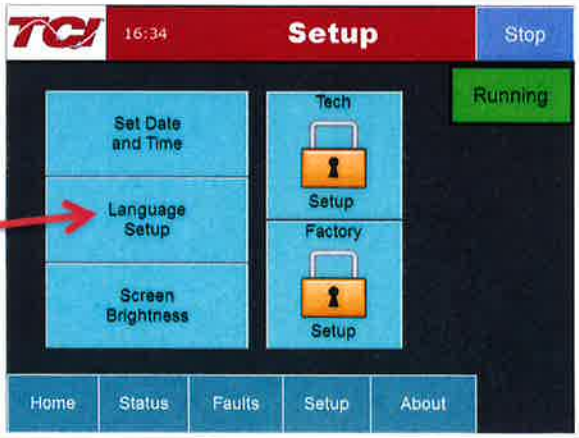

Place a check mark next to each bullet point

Section 1.0 HGA Quick Start Unit Software Setup for HMI Revision I HGA IOM

2) Converter check – 1

- ✓ Press "Password Setup" to navigate to Setup screen
- ✓ Next, select "Tech Setup" and enter the password:

  08252014
- ✓ Select the "Operation Modes" button

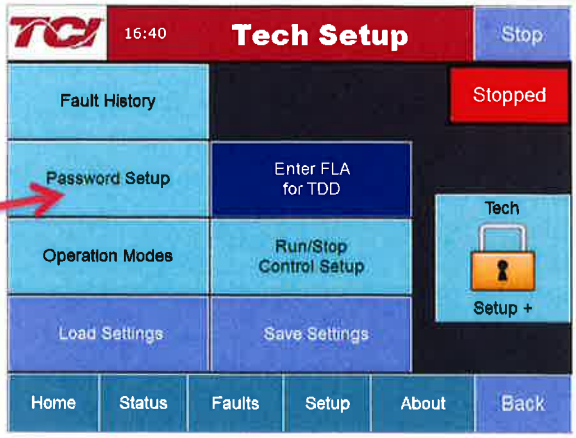

- ✓ On the "Operation Mode Setup" screen, ensure "PF Correction Enable" and "Harmonic Correction Enable" buttons are OFF (Blue). If buttons are green, press to toggle off
- ✓ Select the "CT Ratio" button and enter CT ratio to match the external current transformers wired to the unit. Select the "Back" button

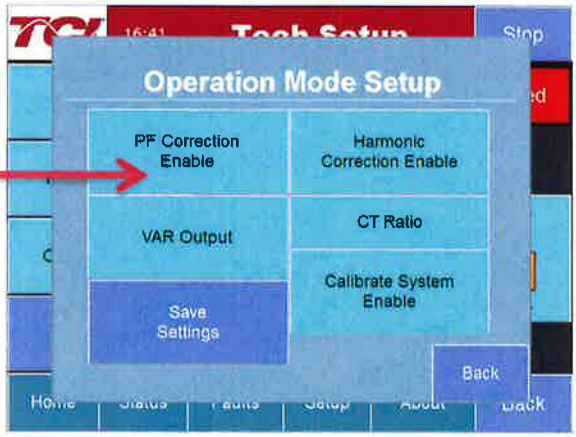

- ✓ Next, select the "VAR Output" button and ensure the "Local VAR Output Enable" and "Network VAR Output Enable" are OFF (Blue). If buttons are green, press to toggle off
- ✓ Select the "Back" buttons to return to the "Tech Setup" screen

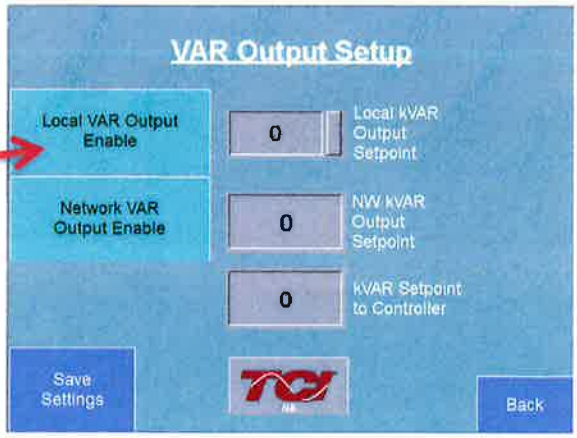

Place a check mark next to each bullet point

Section 1.0 HGA Quick Start Unit Software Setup for HMI Revision I HGA IOM

- On this pop-up screen, ensure the "Auto Start Setup" button is OFF (Blue). If button is ON (Green), press to toggle off.
- Navigate back to "Tech Setup" screen
- Now select "Save Settings"
- Press "Home" to navigate to Home screen

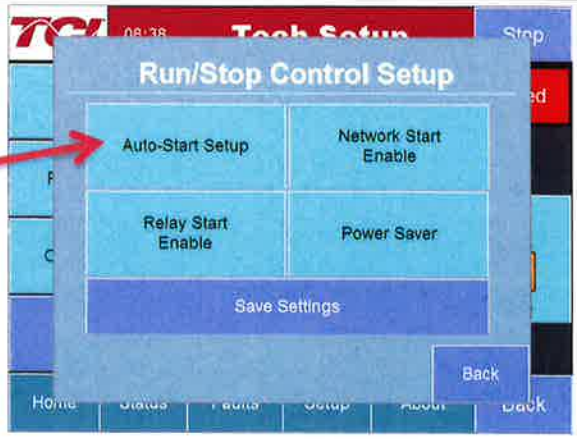

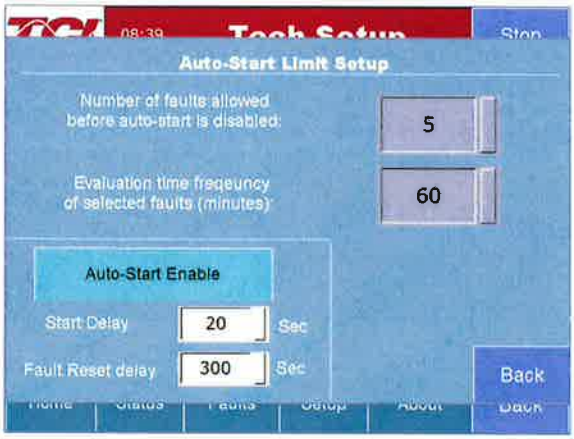

3) Home screen check

- Compare "Freq" to expected line frequency
- Compare "Voltage" to expected line Voltage
- "Current" expected to be zero because unit is not running and CT inputs are shorted
- If status indicates a Fault, press "Stop" button to reset condition

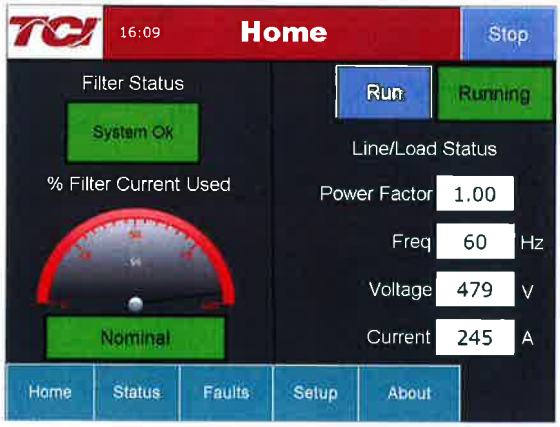

Place a check mark next to each bullet point

Section 1.0 HGA Quick Start Unit Software Setup for HMI Revision I HGA IOM

4) Status screen check

Note: *The Line/Load button and Line/Load Current Plot will say "Line" if a master/ line side unit or say "Load" if it is a slave/load side unit.*

- ✓ Press "Status" to navigate to Status screen
- ✓ Compare "Volts" to expected line Voltage
- ✓ Compare "Freq" to expected line frequency
- ✓ "Current" expected to be zero if unit is not running and CT inputs are shorted

Line Side Configured Unit



Load Side Configured Unit



5) Phase rotation check

- ✓ Press "Phase to Neutral Voltage Plot" button
- ✓ Check that the current peaks follow the following sequence from left to right: Phase A (Green), Phase B (Blue), Phase C (Red)
- ✓ Equipment is phase rotation sensitive, if phase rotation is incorrect, power down unit and rewire to adjust phase rotation by swapping two incoming phase connections

Warning	Improper operation will occur if input Voltage phase rotation is incorrect.

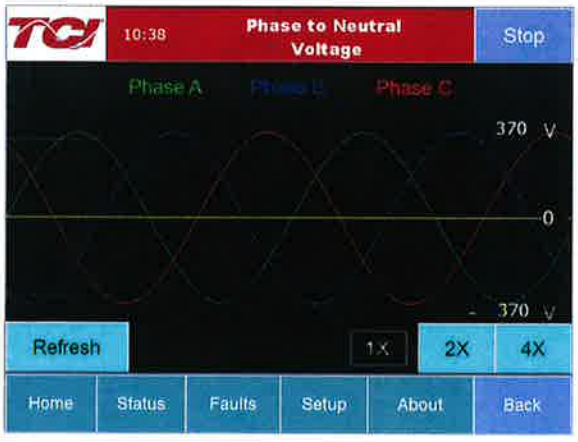

Place a check mark next to each bullet point

Section 1.0 HGA Quick Start Unit Software Setup for HMI Revision I HGA IOM

6) Running Converter

Press "Setup" to navigate to the setup screen
Select the "Tech Setup" button and enter the password:

08252014

- ✓ Select the "Next" button from the splash screen
- ✓ Select the "Operation Modes" button
- ✓ On the "Operation Mode Setup" screen ensure "PF Correction Enable" and "Harmonic Correction Enable" buttons are OFF (Blue). If buttons are green, press to toggle off TODO and VAR output off.
- ✓ Select the "VAR Output" button and ensure the "Local VAR Output Enable" and "Network VAR Output Enable" are OFF (Blue). Select the "Back" buttons to go back to "Tech Setup" screen
- ✓ Select the "Home" button from navigation bar
- ✓ Select the "Run" button to start unit operation

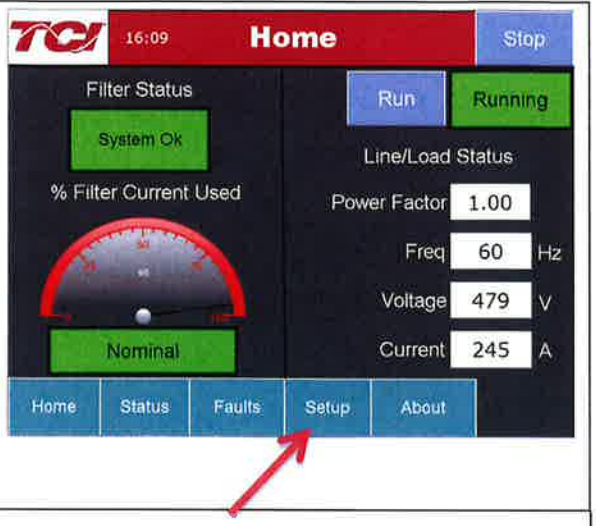

7) Remove CT shorting bars

- ✓ Press "Stop" to turn off unit
- ✓ Disconnect power from cabinet
- ✓ Turn off the built-in door breaker AND
- ✓ Turn off the upstream feeder breaker
- ✓ Open the cabinet door and remove shorting bars from CTs connected to TB-1

Warning ⚡	Lethal Voltages may be present. Wait 5 minutes for DC bus Voltage to drop to safe levels.
Warning ⚡	Check for Voltage in cabinet with a DMM before working inside cabinet.

Place a check mark next to each bullet point

Section 1.0 HGA Quick Start Unit Software Setup for HMI Revision I HGA IOM

8) Current polarity #1

- ✓ Power up unit
- ✓ From Home screen, press "Run" to turn on unit
- ✓ Press "Status" to navigate to Status screen
- ✓ Select "VLine/ILine" screen
- ✓ **Note**: Lightly loaded conditions (less than 20% CT rating) will not have enough current to show up on ILine plot
- ✓ Check that Phase A to Neutral Voltage peak lines up with Phase A current (use zoom if necessary)
- ✓ Check that Phase C to Neutral Voltage peak lines up with Phase C current
- ✓ Power system down and check CT installation location and orientation, if Phase A plots differ significantly from Phase C plots

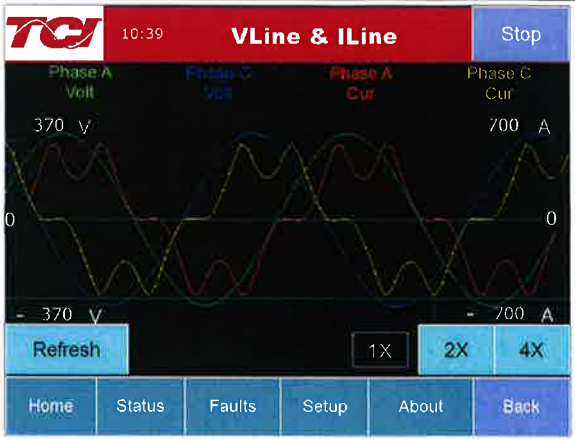

Warning	Open circuit CT outputs can result in high Voltages and damage to equipment.

Warning	Wiring the CT incorrectly can lead to improper operation, which includes unit operating in limit and/or contributing to rather than correcting harmonics.

Note: *If using a Line Side (master) unit, the screen title will say "Line Status" and if using a Load Side (slave) unit, the screen title will say "Load Status".*
Also: *See notes under each screen.*

9) Current polarity #2

- ✓ Navigate to Status screen
- ✓ Depending on unit configuration, select either the "Line" or "Load" button
- ✓ Verify that the fields match expected values for the power system
- ✓ If they do not, verify correct CT installation

Note: *If secondary CT current is less than 1A, THID will be unavailable*

Line Side Configured Unit



Note: *If system Voltage is less than 480 V, the THVD value will be unavailable. If CT secondary feedback current less than 1 Amp, the THID and THID Ref values will be unavailable.*

Load Side Configured Unit



Note: *If system Voltage is less than 480 V, the THVD value will be unavailable. Load Side units do not report ITDD or THID Ref values. If CT secondary feedback current less than 1 Amp, the THID value will be unavailable.*

Place a check mark next to each bullet point

Section 1.0 HGA Quick Start Unit Software Setup for HMI Revision I HGA IOM

10) Final setup

- ✓ Press "Setup" to navigate to setup screen
- ✓ Select the "Tech Setup" button and enter the password:

  08252014
- ✓ Select the next button from the splash screen
- ✓ Select the "Operation Modes" button

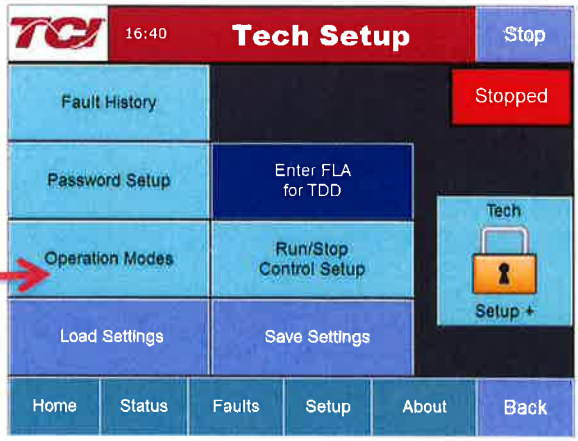

- ✓ On the "Operation Mode Setup" screen select the "Harmonic Correction Enable" button and ensure the button is ON (Green)

✓ ***Note:*** *If unit is sized with sufficient capacity to provide power factor correction, select the "PF Correction Enable" button and ensure the button is ON (Green)*

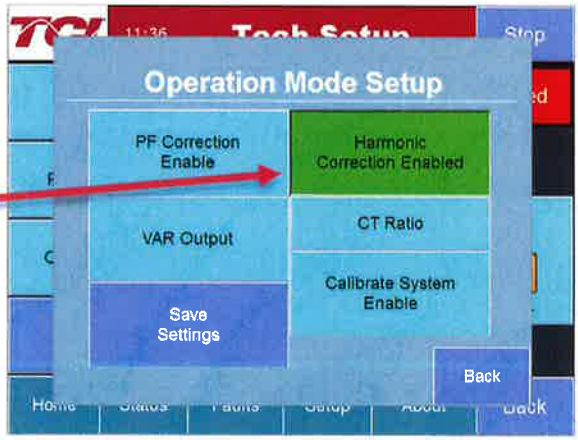

- ✓ Select the "CT Ratio" button and confirm the configured CT ratio matches the external current transformers that are wired to the unit
- ✓ Select the "Back" button and then from "Tech Setup" screen, select "Run/Stop Control Setup"



- ✓ Select "Auto-Start Setup"
- ✓ On this screen, select the "Auto-Start Enable" button and ensure the button is ON (Green)
- ✓ Navigate back to the "Tech Setup" screen and select the "Save Settings" button
- ✓ Navigate to the "Home" screen and press the Run button. The unit will start to operate. With the Auto-Start option enabled, the units will now automatically restart after future power on/off cycles of the unit or non-critical system faults

Warning	When Auto Start is enabled, unit may operate without operator input.

Place a check mark next to each bullet point

Section 1.0 HGA Quick Start Unit Software Setup for HMI Revision I HGA IOM

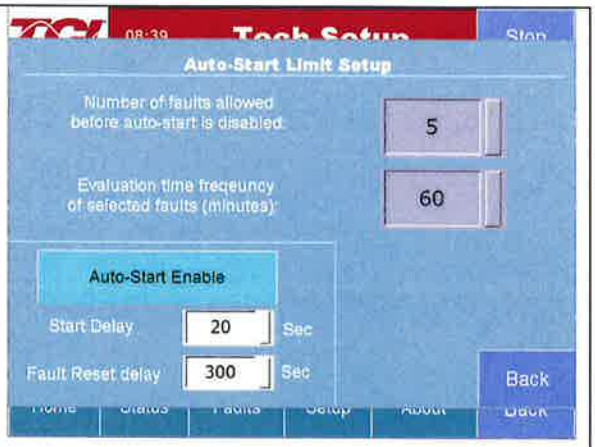

11) Final check

Note: *If unit is configured for load side operation, reference the User Manual for Load Side CT Placement diagram.*

- ✓ Navigate to the Status screen
- ✓ Navigate to Line/Load status
- ✓ Note the corrected Voltage, current, power and THD

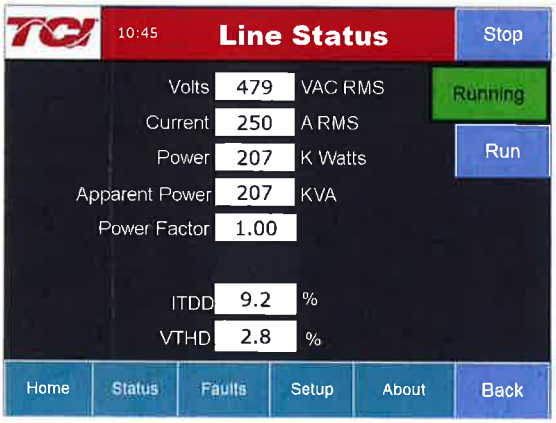

Line Side



Load Side

Hammond Power Solutions

Installation, Operation, and Maintenance Guide

Active Harmonic Filter
All Models

This manual covers the recommendations for the installation, operation and maintenance of all Active Harmonic Filter Models. It is emphasized that these abbreviated instructions should be used in conjunction with all local and National codes and should be referenced accordingly.

	Page
Introduction	1
Safety Precautions	7
Installation	9
Starting Up The Unit For The First Time	42
Front Panel Touch Screen Display	57
Ethernet Communications	100
Ethernet/IP and Modbus TCP for Ethernet/IP Equipped Systems	112
Preventative Maintenance	130
Troubleshooting	131
AHF Specifications and Drawings	141
Warranty/Service and Repair	155
Revision History	155



The pictures used in this guide are only a representation and may vary from the actual product.

Disclaimer of Liability
The recommended practices in this manual are for general applications and are supplied without liability for errors or omissions. Technical data are subject to change at any time without notice and any necessary corrections will be included in subsequent editions.
Special requirements should be referenced back to the manufacturer and/or their representation.

*Note: this guide is in English only

Literature No.: **IOMGAHF**
Issue Date: Nov 2020

1. INTRODUCTION 1
1.1. INTRODUCTION TO THE HPS TRUWAVE AHF 1
1.2. INTRODUCTION TO HARMONIC CURRENTS 1
1.3. HOW THE HPS TRUWAVE AHF WORKS 2
1.4. POWER SAVING FEATURES OF THE HPS TRUWAVE AHF 5
2. SAFETY PRECAUTIONS 7
3. INSTALLATION 9
3.1. PRE-INSTALLATION PLANNING 9
3.2. PLACING AND WIRING A TYPE 1 ENCLOSED HPS TRUWAVE AHF 11
3.2.1. WIRING A 50 OR 100 AMP TYPE 1 ENCLOSED AHF 13
3.2.2. WIRING A 150 OR 200 AMP TYPE 1 ENCLOSED AHF 15
3.2.3. WIRING A 300 AMP TYPE 1 ENCLOSED AHF 16
3.3. INSTALLING AND WIRING AN AHF PANEL 24
3.4. CONNECTING POWER WIRES AND CT WIRES TO THE AHF 29
3.4.1. SINGLE AHF MONITORING “LINE” SIDE CURRENT 33
3.4.2. SINGLE AHF MONITORING “LOAD” SIDE CURRENT 33
3.4.3. PARALLELED AHFS TO CORRECT HIGHER CURRENTS 35
3.4.4. USING “LINE” SIDE CTS TO PRODUCE “LOAD” SIDE CURRENTS 36
3.5. HMI (HUMAN MACHINE INTERFACE) 38
3.5.1. HMI POWER & COMMUNICATIONS CONNECTION 38
3.5.2. ETHERNET CONNECTION 38
3.5.3. CONTROL STATUS RELAY CONTACTS & EXTERNAL ENABLE 38
3.5.4. INDUSTRIAL NETWORK CONNECTION 40
3.5.5. BATTERY REPLACEMENT & HMI INPUT CONNECTOR 40
3.5.6. USB AND ETHERNET ACCESS VIA THE HMI FRONT COVER 40
4. STARTING UP THE UNIT FOR THE FIRST TIME 42
4.1. TURNING ON THE UNIT TO CHECK FOR CORRECT CT PLACEMENT 42
4.2. CORRECTING CTS THAT ARE INCORRECTLY INSTALLED 46
4.2.1. CORRECTING CT PLACEMENT BY PHYSICALLY MOVING THE CTS 47
4.2.2. CORRECTING CT PLACEMENT BY MOVING THE POWER WIRES TO THE AHF 47
4.2.3. CORRECTING CT PLACEMENT VIA THE CT SETUP DISPLAY 47
4.2.4. EXAMPLES OF CORRECTING CT PROBLEMS 52
4.3. ENABLING AHF AFTER CTS HAVE BEEN VERIFIED 53
4.4. CHECKING CTS WITH NO LOAD AVAILABLE 55
5. FRONT PANEL TOUCH SCREEN DISPLAY 57
5.1. POWER-UP SPLASH DISPLAY 58
5.2. “OPERATING STATUS” HOME DISPLAY 58
5.3. “OPERATING STATUS” MORE DISPLAY 61
5.4. “MENU” DISPLAY 63
5.5 “SET TIME/DATE” DISPLAY 63
5.6 “VIEW/SET PARAMETERS” DISPLAY 65
5.6.1 “CUSTOMER PARAMETERS” DISPLAY 65
5.6.2 “CONTROL PARAMETERS” DISPLAY 69
5.6.2 “SYSTEM PARAMETERS” DISPLAY 69
5.6.3 “CONFIGURATION PARAMETERS” DISPLAY 72
5.6.4 CHANGING THE SETTING OF A PARAMETER 72
5.7 “CT SETUP” DISPLAY 75
5.8 “HISTORY” DISPLAY 75
5.8.1 “HISTORY ON/OFF” DISPLAY 76
5.8.2 “HISTORY ON/OFF VERBOSE” DISPLAY 77
5.8.3 “HISTORY RESET” DISPLAY 78
5.8.4 “HISTORY FDR” DISPLAY 79
5.8.5 “HISTORY SAVE TO FLASH” DISPLAY 83
5.8.6 “HISTORY INITIALIZE” DISPLAY 84

5.9 “ETHERNET INFO” DISPLAY 85
5.9.1 CHANGING FROM DHCP TO STATIC IP ADDRESS 86
5.9.2 CHANGING FROM STATIC IP ADDRESS TO DHCP 88
5.9.3 ETHERNET USING CROSSOVER CABLE OR AUTO-MDIX 90
5.9.4 “ETHERNET/IP OR MODBUS TCP INFO” DISPLAY 93
5.10 “WAVEFORMS” DISPLAY 94
5.11 “DIAGNOSTICS” DISPLAY 96
5.11.1 “UPDATE FIRMWARE” DISPLAY 97
5.12 ENABLING OR DISABLING THE AHF USING THE RUN OR STOP BUTTONS 101
5.13 FRONT PANEL STATUS LEDS 101
6. ETHERNET COMMUNICATIONS 103
6.1 USING THE ETHERNET COMMUNICATIONS INTERFACE 103
6.2 ETHERNET COMMUNICATIONS COMMANDS 103
6.2.1 “A” ACEN/ACDIS COMMAND 105
6.2.2 “HF” HISTORY FDR COMMAND 105
6.2.3 “H” HISTORICAL EVENT DATABASE DISPLAY COMMAND 105
6.2.3.1 “HO” HISTORICAL ON/OFF EVENT DATABASE DISPLAY COMMAND 105
6.2.3.2 “HR” HISTORICAL RESET EVENT DATABASE DISPLAY COMMAND 107
6.2.4 “K” KSET (SYSTEM OPERATING PARAMETERS) SERIAL COMMAND 108
6.2.5 “O” OPT (OPTIONS CONFIGURATION) COMMAND 109
6.2.6 “Q” QOFF SERIAL COMMAND 109
6.2.7 “S” OR “V” STATUS SERIAL COMMANDS 109
6.2.8 “T” DATE AND TIME COMMAND 111
6.2.9 “Z” ZCAL COMMAND 111
7. ETHERNET/IP AND MODBUS TCP FOR ETHERNET/IP EQUIPPED SYSTEMS 112
7.1 ETHERNET/IP DATA INFORMATION 112
7.2 IP ADDRESS CONFIGURATION FOR ETHERNET/IP 120
7.3 USING AHF’S HMI WITH RSLOGIX 5000 VIA ETHERNET/IP 122
7.3.1 REQUIRED MATERIALS 122
7.3.2 RSLOGIX 5000 CONFIGURATION 122
7.4 MODBUS/TCP FOR ETHERNET/IP EQUIPPED SYSTEMS 125
7.4.1 REQUIRED MATERIALS 125
7.4.2 MODBUS-TCP EXAMPLE 125
7.5 VIEWING ETHERNET/IP DATA ON A WEBSITE 128
8. PREVENTATIVE MAINTENANCE 130
9. TROUBLESHOOTING 131
9.1 FRONT PANEL HMI DISPLAY STATUS (FAULT) MESSAGES 131
9.2 SHUTDOWN HISTORY MESSAGES 135
9.3 RESET HISTORY MESSAGES 138
9.4 TROUBLESHOOTING THE FRONT PANEL HMI DISPLAY 139
10. AHF SPECIFICATIONS AND DRAWINGS 141
11. WARRANTY/SERVICE AND REPAIR 155

List of Illustrations

Figure 1.1: Simplified 1-line Diagram of an AHF Installation 3
Figure 1.2: Load Current Waveform 4
Figure 1.3: AHF Current Waveform 4
Figure 1.4: Line Current Waveform 4
Figure 1.5: Power Losses vs. Output Current 5
Figure 3.1: Installation Showing Clearances and Wire Entry 12
Figure 3.2: 50 or 100 Amp AHF TYPE 1 Cabinet Top Wire Entry 18
Figure 3.3: 50 or 100 Amp AHF TYPE 1 Cabinet Bottom Wire Entry 18
Figure 3.4: 150 or 200 Amp AHF TYPE 1 Cabinet Top Wire Entry 19
Figure 3.5: 150 or 200 Amp AHF TYPE 1 Cabinet Bottom Wire Entry 19

Figure 3.6: 300 Amp AHF TYPE 1 Cabinet Top Wire Entry 20
Figure 3.7: 300 Amp AHF TYPE 1 Cabinet Bottom Wire Entry 20
Figure 3.8: TYPE 1 Enclosure Wire Routing 21
Figure 3.9: 50 or 100 Amp AHF TYPE 1 Wire Passage Through Divider Panel 22
Figure 3.10: 150 or 200 Amp AHF TYPE 1 Wire Passage Through Divider Panel 22
Figure 3.11: 300 Amp AHF TYPE 1 Wire Passage Through Divider Panel 23
Figure 3.12: HMI Enclosure Cutout Pattern 24
Figure 3.13: HMI Dimensions 25
Figure 3.14: 50-200 Amp Panel to Cabinet Front Door Dimensions 26
Figure 3.15: 300 Amp Panel to Cabinet Front Door Dimensions 26
Figure 3.16: Possible Routing Path for HMI to PC-C Signal & Power Cat 5 Cable 27
Figure 3.17: Single AHF with Line Side CTs 33
Figure 3.18: Single AHF with Load Side CTs 33
Figure 3.19: Single AHF with 1 set of Load Side CTs monitoring 2 loads 34
Figure 3.20: Single AHF with 2 sets of Load Side CTs monitoring 2 loads 34
Figure 3.21: Paralleling 2 AHFs 35
Figure 3.22 Using “Line” side CTs to produce “Load” side currents 37
Figure 7.1: Ethernet/IP I/O Assembly 112
Figure 10.1: 50 Amp AHF Panel Layout Drawings 147
Figure 10.2: 100 Amp AHF Panel Layout Drawings 148
Figure 10.3: 150 Amp AHF Panel Layout Drawings 149
Figure 10.4: 200 Amp AHF Panel Layout Drawings 150
Figure 10.5: 300 Amp AHF Panel Layout Drawings 151
Figure 10.6: 50 & 100 Amp Type 1 Enclosed AHF Drawings 152
Figure 10.7: 150 & 200 Amp Type 1 Enclosed AHF Drawings 153
Figure 10.8: 300 Amp Type 1 Enclosed AHF Drawings 154

List of Tables

Table 3.1: Type 1 Enclosure Power Wiring Information 13
Table 3.2: Cabinet Depth Design Guidelines for Panels 25
Table 3.3: AHF Panel Power Wiring Information 28
Table 3.4: Maximum lengths for CT leads 29
Table 3.5: Lengths that leads on HPS supplied CTs may be extended 30
Table 4.1: CT SETUP Status Messages 45
Table 4.2: Incorrect CT Placement and Corrective Action Needed for a 2 CT System 49
Table 4.3: Incorrect CT Placement and Corrective Action for a 3 CT System (page 1 of 2) 50
Table 6.1: Serial Communications Commands 104
Table 6.2: Status Display Parameters 110
Table 7.1: Ethernet/IP parameters for Input Assembly Data 113
Table 7.2: AHF Ethernet/IP Input Assembly Data 113
Table 7.3: Meaning of AHF Attention Code Register 115
Table 7.4: Ethernet/IP parameters for Output Assembly Data 120
Table 7.5: AHF Ethernet/IP Output Assembly Data 120
Table 8.1: Replacement Air Filter Media for Type 1 Enclosed AHFs 130
Table 9.1: Fault Messages 131
Table 9.2: Shutdown Reasons 135
Table 9.3: Additional Shutdown Reasons that Only Occur During Precharge 137
Table 9.4: Additional Shutdown Reasons that Only Occur During AC Contactor Closures 138
Table 9.5: Reset Reasons 139
Table 9.6: HMI Reset Reasons 140
Table 10.1: Specifications for 50 Amp AHF 141
Table 10.2: Specifications for 100 Amp AHF 142
Table 10.3: Specifications for 150 Amp AHF 143
Table 10.4: Specifications for 200 Amp AHF 144

Table 10.5: Specifications for 300 Amp AHF 145

1. INTRODUCTION

1.1. INTRODUCTION TO THE HPS TRUWAVE AHF

The ***HPS TruWave Active Harmonic Filter*** (AHF) is an active harmonic filter that filters "undesirable by-product" harmonic currents drawn by 3-phase delta non-linear loads, so the power source (electric utility or on-site generator) does not have to supply them. In addition, the HPS TruWave AHF can also provide "undesirable" reactive fundamental currents drawn by 3-phase delta loads, so they too do not have to be supplied by the power source. The elimination of these "undesirable" current components results in a nearly pure sinusoidal current with a reduced rms magnitude drawn from the power source. This can result in substantial overall power savings, increased reliability of power distribution equipment, and conformance to ANSI/IEEE 519-2014.

The HPS TruWave AHF has several features to easily adapt it to a variety of installations. These include:

1) Units may be supplied in Type 1 wall mount or floor mount stand-alone units, or as panel mount units that can be installed in customer specified enclosures.
2) Units are small in size allowing easier installation in tight spots.
3) Exhibit industry leading high operating efficiency, resulting in reduced power utility costs, reduced air conditioning needs, and higher system reliability.
4) Wiring to units can be from either the top or the bottom of the unit.
5) Units can be paralleled (up to several units) to provide higher current capacities.
6) Units will continue to operate indefinitely if overloaded. If the load draws more harmonic current (and/or reactive current if unit is being relied on to correct linear displacement as well as harmonic currents) than the unit is rated for, unit will electronically self-limit its correction current to its rated capacity. The excess harmonic or reactive current that is beyond its rated current would come from the utility.
7) External Current Transformers (CTs) come in a variety of shapes and sizes, and can be installed on either the line or load side. Note: paralleled AHFs must have CTs installed on the load side.
8) A large amount of operating information and several operator configurable parameters can be communicated with the unit in multiple ways:
    - Via the 7" diagonal 800x480 Full Color resistive touch screen display.
    - From a computer using Ethernet.
    - Over an Ethernet/IP or MODBUS/TCP industrial Ethernet network.
9) The ability to disable a unit from running via the touch-screen display, via Ethernet communications, or with an externally generated dry contact.
10) Systems save "historical" operational information in non-volatile flash memory to greatly assist in diagnosing a problem (both internal and external to the unit), should one occur.

Later sections of this manual contain details of how to take advantage of these features.

1.2. INTRODUCTION TO HARMONIC CURRENTS

Electronic equipment and controls, such as computers, computer peripherals, AC and DC motor drives and many other commonly used electronic hardware in the market place today, can overburden the electric utilities with various harmonic distortions. Such equipment (referred to as nonlinear loads) is characterized by high current crest factors (C.F.) and low power factor (P.F.). Such loads are referred to as non-linear because they draw harmonic currents in addition to the fundamental current. The

fundamental current is at the same frequency (e.g. 60 Hz) as the voltage supply. These harmonic currents drawn by 3-phase loads are at integer multiples (predominantly odd integer multiples, not divisible by 3) of the fundamental frequency, and are superimposed onto the fundamental current. Examples of these harmonic currents in a 60 Hz supply are the 5th harmonic (at 300 Hz frequency), 7th (420 Hz), 11th (660 Hz), 13th (780 Hz), etc. Since these current components are at a different frequency than the 60 Hz voltage supply, they do not contribute at all to the useful work done by the load. These "extra" harmonic current components have the following adverse effects on the power grid that has to supply them:

1) Harmonic currents cause distortion in the voltage signal. This voltage distortion can result in adverse effects on other loads powered from the grid, especially equipment that expects to see a sine-wave voltage. For example, the distorted voltage could cause AC motors powered directly from the grid to have higher losses and possibly experience torque pulsations.

2) The total rms current drawn from the power grid is increased. The increased current will increase the losses in transmission lines, transformers, breakers, etc. that supply the nonlinear loads. These undesirable harmonic currents are at much higher frequencies than the useful fundamental current these components are designed for. Higher frequency currents cause disproportionately higher losses than the fundamental current, especially in transformers, thus placing a much higher burden on those components. These extra "transmission" losses will cause extra heating along the transmission path, resulting in additional cost due to "lost" power and premature failures in the transmission equipment.

To combat this additional cost, electric utilities are using more sophisticated metering equipment to monitor for harmonics in addition to the traditional power usage and displacement power factor monitoring. This can result in substantial penalty charges on a plant's electric bill, or in some cases being dropped from the grid until the problem is corrected. Power consultants, computer and communications specialists are therefore compelled to include in their specifications compliance to ANSI/IEEE 519-2014 stringent requirements, which define the maximum amount of harmonic distortion that newly installed equipment and controls are allowed to inject into the utility lines.

Many approaches have been devised in the past, aimed to minimize the harmonic distortion. Special zigzag transformers, phase shift transformers, and passive filters have all brought some type of harmonic relief, but not without severe limitations. Since the generated harmonics are a function of the actual load, and can vary during the course of the operation, it is very difficult to design such a filter in advance, which will cover any and all loads (both present and future) and the corresponding harmonic conditions.

1.3. HOW THE HPS TRUWAVE AHF WORKS

Unlike the passive harmonic correction methods listed in the previous section, the ***HPS TruWave Active Harmonic Filter*** (AHF) is a true active filter. Its design does not necessitate extensive knowledge regarding the harmonic profile of the load or electrical characteristics of the environment. Only the Total Current Distortion and phase displacement are required in sizing the AHF to an existing or proposed non-linear load.

The HPS TruWave AHF is wired in parallel with the loads it is correcting the harmonics and/or correcting linear power factor for. Since it is in parallel with the load, and not in series with the load, as is required for many other harmonic correction methods, the AHF can be turned off for maintenance or repair without affecting the operation of the load. A simplified 1-line diagram of an AHF correcting a Non-linear load is shown in Figure 1.1. Without the AHF present, the current drawn by the load (I_Load) is supplied totally by the utility (I_Line). In this case I_Line = I_Load, so whatever undesirable harmonic and/or reactive currents the Non-linear load draws must come from the utility.

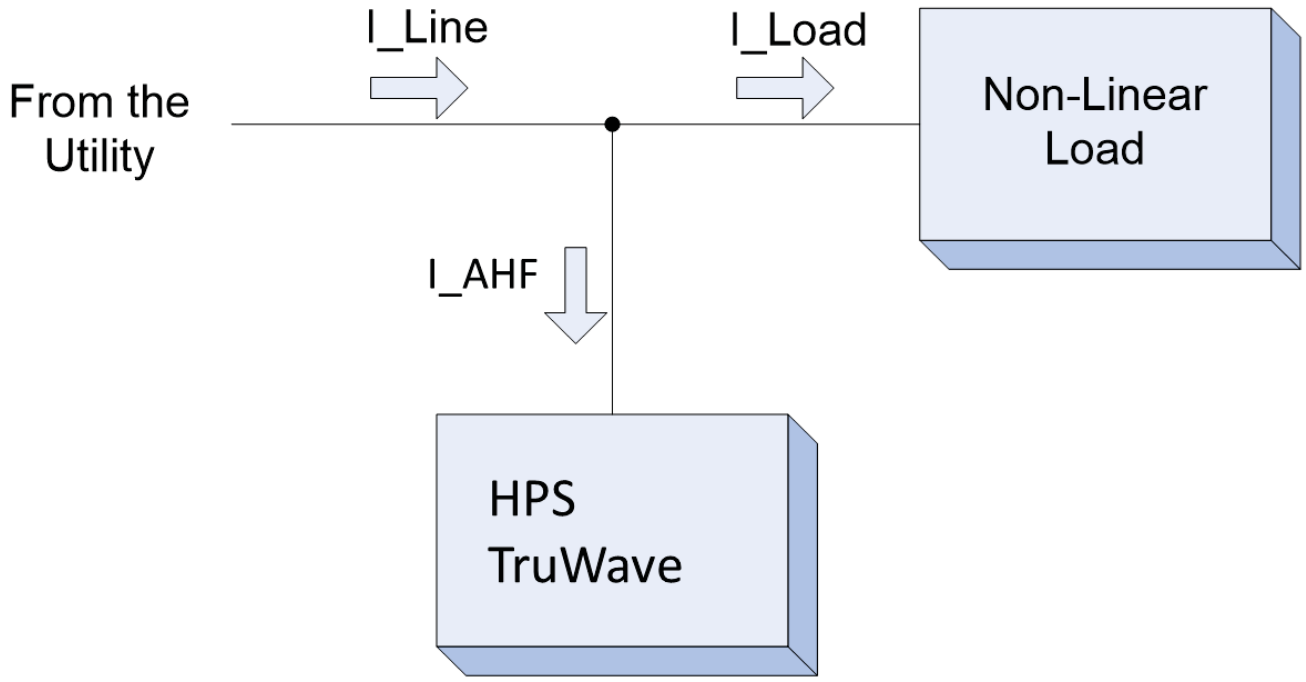

Figure 1.1: Simplified 1-line Diagram of an AHF Installation

An AHF installed in parallel with the load changes the situation. The AHF provides a path for these undesirable harmonic and/or reactive currents, so the utility no longer needs to supply them. In Figure 1.1 the AHF draws a current I_AHF which is effectively the opposite of those undesirable currents drawn by the load. Since I_Line = I_Load + I_AHF, the resultant I_Line current coming from the utility consists primarily of just the "useful" in-phase fundamental portion of the current drawn by the load.

Figure 1.2, Figure 1.3, and Figure 1.4 that follow are current waveforms taken from a system that consists of a very harsh 3-phase non-linear load (similar to a motor drive with very little DC choke or AC line reactor inductance) and a 300 amp HPS TruWave AHF powered from 3-phase, 480 Vac, 60 Hz utility power. Only the current of one of the three phases is shown for simplicity; however, the other 2 phases are very similar to this phase. The load is drawing harmonic currents that are between 60 and 65% of the total load current. This is referred to as having a current THDR (Total harmonic distortion in reference to total rms) of between 60 and 65%. Most non-linear loads will have higher inductance in their input circuitry, resulting in a much lower THDR of between 30 and 40%, and thus easier to correct for; however, this very harsh load was selected to demonstrate how effective the HPS TruWave AHF is in correcting harmonic currents. To correct this load current, the 300 amp AHF is utilizing about 2/3 of its 300-amp capacity or about 200 amps of correction.

Figure 1.2 shows the load current over two 60 Hz periods. The load, having a rectifier bridge at its input to convert the AC voltage to a DC voltage, draws high peak currents instead of a nice sine-wave current. The difference between the waveform displayed and a sine-wave are made up of the harmonic currents (5th, 7th, 11th, 13th, etc. harmonics). The primary task of the AHF is to draw current that is equal and opposite to these harmonic currents, so the resultant current supplied by the utility does not need to provide them. Figure 1.3 shows the current drawn by the AHF. At the start of the waveform, the AHF draws current from the line, reaching a peak of about 250 amps. During this time, the load is drawing no current. Then the load draws a spike of current reaching a peak of 650 amps. During this time, the AHF draws the opposite of this spike in order to cancel its affect. Figure 1.4 shows the resultant I_Line current (I_Load + I_AHF) drawn from the utility – the desired sine-wave with the harmonic currents reduced to a little over 3%. Without the AHF, the current from the utility would look like the I_Load current waveform. Since we've effectively removed the harmonic current components from the line current, the line current is reduced to 260 amps rms even though the load current is at about 325 amps rms. The power factor of the line improved from about 0.8 to more than 0.99.

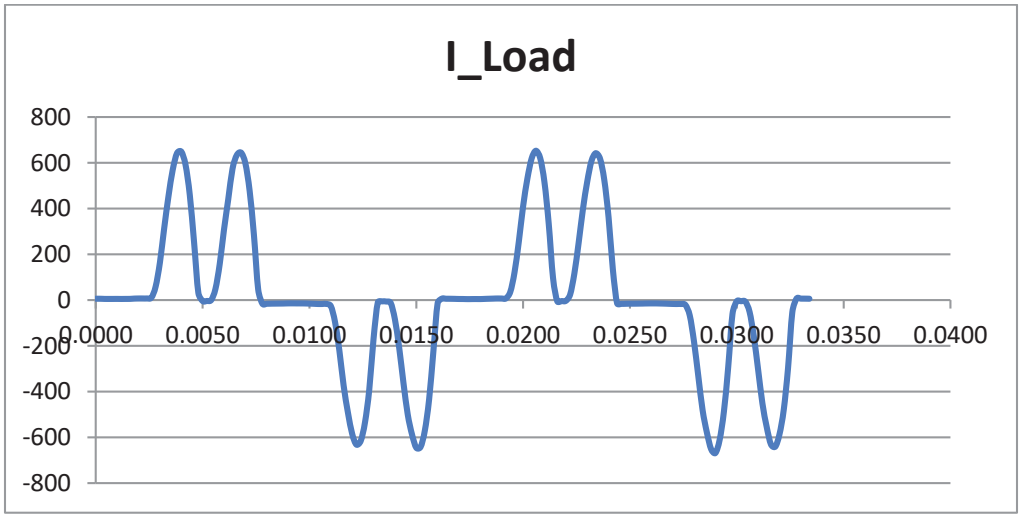

Figure 1.2: Load Current Waveform

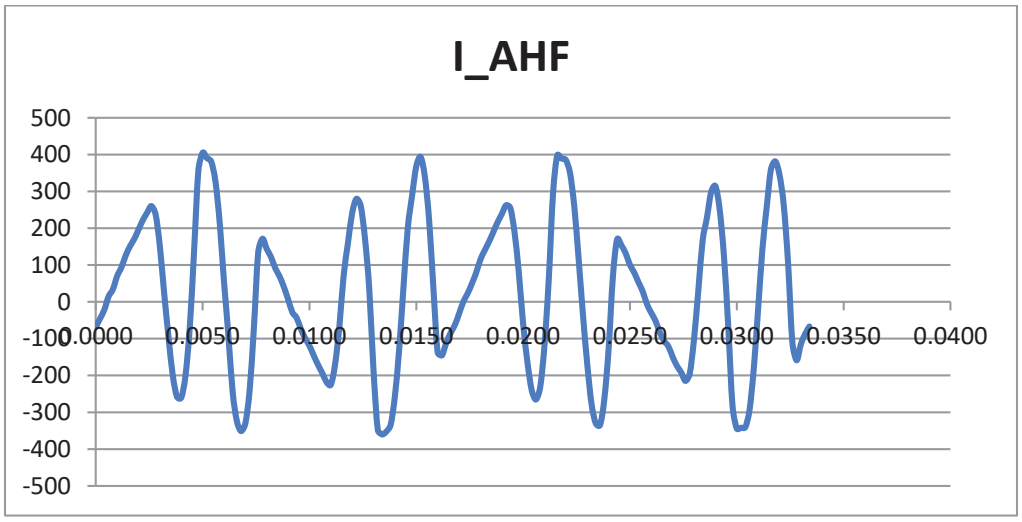

Figure 1.3: AHF Current Waveform

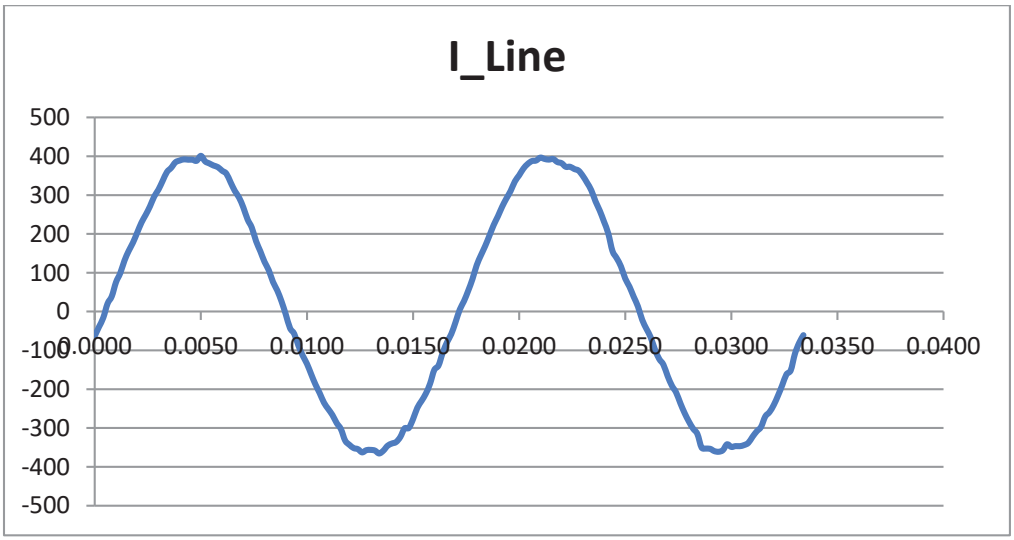

Figure 1.4: Line Current Waveform

The HPS TruWave AHF uses a four quadrant inverter, utilizing a modulation frequency of many thousand cycles per second, to produce the current waveform shown in Figure 1.3 that accurately cancels the currents drawn by the load so that the utility doesn't have to supply them. The AHF uses a sophisticated hybrid control that uses a combination of fast immediate response along with information stored from the recent past to accomplish the extremely fast current changes needed. In the example waveforms for the harsh 60-65% harmonic load just examined, the AHF had to change its current output at times as much as 500 amps in .0005 seconds to cancel the harmonic currents drawn by this load.

Another advantage of an Active Harmonic Filter over passive solutions is that if the harmonic currents present exceed the capabilities of the Active Filter, it simply limits its corrective current to its rating by adjusting its control. The remaining harmonic current that is beyond the rating of the Active Filter then must be supplied by the utility. The Passive Filter has no means to limit itself; therefore the currents increase until the circuit protection breakers trip or fuses open. If the Passive Filter is in series with the load, the load goes down with the filter.

1.4. POWER SAVING FEATURES OF THE HPS TRUWAVE AHF

Not only does the HPS TruWave AHF have extremely high performance, but it achieves it at industry leading power efficiency. A 300 Amp AHF operating at full capacity of cancelling 300 amps of harmonics on all 3 lines typically dissipates 5100 watts of power. Other Active Harmonic Filter systems on the market dissipate as much as an additional 5000 watts or more under the same conditions. A HPS TruWave unit operating 24/7 at these conditions results in almost 44,000 KW-hrs less in power losses in a year. At an average rate of 10 cents per KWH, this represents a savings of $4,400 in utility costs in a year. Of course, you may not need the full rated capabilities of the AHF 24/7. In the case of a system operating at less than full operating capacity, the HPS TruWave AHF still offers industry leading efficiencies.

Figure 1.5 shows typical Losses vs. Output Current. In this graph, the horizontal axis shows the Output Current of an AHF normalized to the full load current (e.g. for a 300 amp AHF, 1 represents 300 amps, 0.5 represents 150 amps, etc.). The vertical axis shows the Losses of an AHF normalized to the full load losses (e.g. for a 300 amp AHF, 1 represents 5100 watts, 0.5 represents 2550 watts, etc.). This graph shows that a system operating at 50% of the rated current will have about 50% of the full rated power losses.

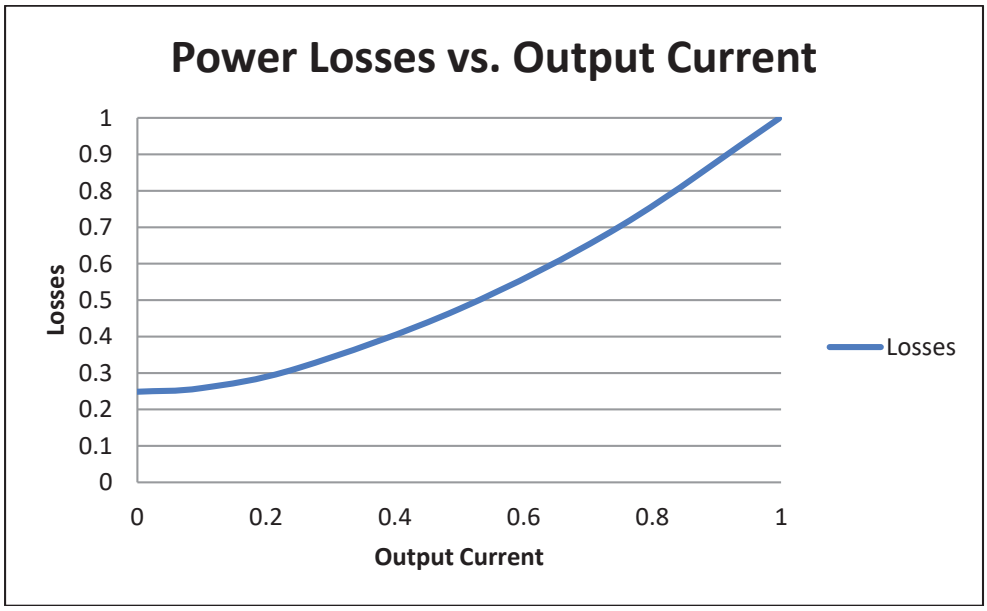

Figure 1.5: Power Losses vs. Output Current

There is also the case where a facility may shut down for several hours in a day. As can be seen in

Figure 1.5 there are appreciable losses when no corrective current is being supplied by the AHF. Such losses in the HPS TruWave AHF are lower than the industry norm for active harmonic filters; however, they do represent losses for doing little or no useful current correction. For such a condition, HPS offers a power saving mode that can be programmed by an operator via the front panel or over the Ethernet link. If this feature is selected, when the load is shut off or greatly reduced, the AHF will shut off its power inverter and cooling fans, but keep its internal components charged and ready to go. When the load returns, the system will automatically start full operation within a fraction of a second (no initialization or pre-charging cycle required). While in this "idle" state, the system's losses are reduced to less than 100 watts for all models. The Front Panel will display "IDLE" as the control mode while in this state. To utilize this power saving mode, should your facility have significant periods of time when the load the AHF is correcting for is shut off, see the "UNIT DISABLED IF LOAD POWER BELOW THIS %" parameter in section **Error! Reference source not found.**.1 of this manual for information on etting up this feature.

2. SAFETY PRECAUTIONS

This equipment should be installed, operated and maintained only by **qualified personnel**. The only time that the unit should be opened is for initial installation or routine maintenance. The following warnings apply to the equipment and should be read and fully understood by qualified personnel before they begin working on the unit:

WARNING

Risk of Electric Shock exists inside the Active Harmonic Filter (AHF) enclosure. The AC Disconnect should be in the OFF position for 5 minutes prior to opening the door of the unit. For additional safety, if possible, the external AC breaker feeding the AHF should also be locked in the OFF position. If not, the top terminals of the disconnect inside the unit will be electrically hot, and must be avoided. Even with the disconnect turned off, hazardous voltages may exist within the unit for several minutes after the disconnect is turned off. THESE HAZARDOUS VOLTAGES REPRESENT A POSSIBLE SHOCK HAZARD THAT COULD RESULT IN DEATH OR INJURY TO PERSONNEL.

WARNING

Always keep the front door closed and locking screws in the locked position. Leaving the unit's door open may expose personnel to an electrical shock hazard that could result in death or injury, or damage to the equipment. The AC Disconnect MUST remain in the OFF position at all times while the door to the system is open. Turning the AC Disconnect on after the door has been opened will result in hazardous voltages being present at many locations within the unit. SUCH HAZARDOUS VOLTAGES COULD CAUSE ELECTRIC SHOCK THAT COULD RESULT IN DEATH OR INJURY.

WARNING

The Active Harmonic Filter (AHF) contains capacitive components that remain energized for several minutes after power to the AHF has been removed. The AC disconnect should be in the OFF position for 5 minutes prior to opening the door of the unit. Of particular interest are the large can capacitors mounted in front of the heat sink. Two red lights mounted on the High Voltage Interface PC Board indicate if these capacitors are charged to hazardous levels. If either of these two red lights is lit, potentially deadly voltage exists on these capacitors. While these capacitors are charged, hazardous voltage exists in several places within the unit (including, but not limited to all DC filter capacitors; bus bars associated with the capacitors; the components on the heatsink; several other components located on the back panel; and the High Voltage Interface PC Board). The capacitors have circuits to discharge them. Do not proceed into the unit until the capacitors have been sufficiently discharged, signified by both red lights being off. Once the red lights are off, carefully measure the voltage across a far left capacitor and the capacitor directly to the right of that capacitor using a DC voltmeter, making sure you do not come in contact with any other metal objects within the cabinet. Make certain that both voltages you have measured are below 10 vdc before proceeding within the cabinet.

WARNING

Do not rely entirely on the red lights for safety. A failure in the lights or circuits that drive the lights could result in no lights being lit when a hazardous voltage exists. However, never proceed into the unit if the lights are on. Always use a DC voltmeter to measure the actual capacitor voltage once the lights are dim or off. Do not come in contact with any metal objects that are not grounded to the frame while making this measurement.

WARNING

Do not open the output circuit of a current transformer (CT) unless the circuit the CT monitoring is de-energized or the CT has been physically removed from the circuit. This includes not removing any connections from, or the connectors themselves from P1 or P2 of the CT Interface boards inside the AHFs. Opening the output circuit of a CT could result in very high voltage that can cause the CT to fail and represent an extremely dangerous condition to personnel. Exception: If CTs are first connected to a shorting terminal block prior to being wired to an AHF, and shorts are applied across each CT's pair of output wires on that block, then CT related wiring continuing from the block to the AHF may be opened without harm.

3. INSTALLATION

This section contains instructions for installing self-contained type 1 enclosed wall-mount or floor-mount AHFs, or installing open panels inside an industrial enclosure. Type 1 enclosed systems are identified by a letter A suffix in the model number and open panel systems are identified by a letter F suffix in the model number (e.g. WAHF1K050A is a 50 amp, 480-volt type 1 enclosed system. An open panel system would simply substitute the letter A with a letter F).

During the installation, please find and consult in section 10 of this manual the drawings pertaining to your particular system. Section 3.1 should be consulted for all systems. Consult Section 3.2 if installing a type 1 enclosed system or Section 3.3 if installing a panel inside your own enclosure. Section 3.4 is to be consulted for all systems and contains instructions for connecting the power wires and external current transformers (CTs) to your AHF. Finally, Section 3.5 contains information about using and connecting to optional control inputs & outputs.

3.1. PRE-INSTALLATION PLANNING

Prior to installation and even procuring a HPS TruWave AHF, perform the following checklist:

- Make sure that the voltage rating of the HPS TruWave AHF matches the voltage rating of the AC power driving the loads.
- Make sure that the current rating of the HPS TruWave AHF is adequate to correct enough of the harmonics (and reactive currents if so desired) drawn by the load to reduce these undesirable current components to the necessary levels. Multiple AHFs can be installed in parallel to increase the corrective current capability. Also, if there is room for external line reactors to be installed in front of the non-linear loads, and adding such reactors is cost effective, the additional inductance provided by such reactors will reduce the harmonic currents drawn by the loads, which may result in a lower number of AHFs required or a smaller sized AHF needed.
- The CTs need to be selected. CT current ratios are specified as n/5 where 5 represents 5 amps of output current when “n” amps of current is being monitored. “n” should be chosen so that it is greater than or equal to the maximum rms of the current that can flow in the wire being monitored. Usually, select “n” to be equal to or greater than the breaker rating protecting that wire. There exist conditions, such as CT wiring distance, that may warrant a higher “n” value being chosen. Refer to section 3.4 for additional information. If using flexible CTs from HPS, “n” should normally be at least 600, as CTs with ratios less than 600/5 have lower accuracy and are difficult to extend the lead wires due to their low VA power capability. If using other CTs, the CTs should be “meter” grade or at least be capable of accurately reading 400 Hz current. The tradeoff of using higher current ratios CTs will be reduced resolution of the current produced by the CT (e.g. a 2000/5 CT produces only half of the signal that a 1000/5 CT produces). However, the HPS TruWave AHF is designed with excellent current resolution. Even 50 amp AHFs have been shown to operate well with 2000/5 CTs. At all times, the “n” value in the n/5 ratio should never be less than the maximum rms current that can flow in the wires being monitored by the CTs.
- Units should be installed where they will NOT be exposed to rain or dripping liquids, corrosive gases or liquids, conductive airborne particles, or excessive dirt and dust.
- Make sure the space allocated for the unit(s) is adequate to accommodate the dimensions of the unit while maintaining the necessary clearances around the unit as specified in a later section.
- The ambient temperature where the unit(s) is to be placed should be maintained between 0 and 40ºC. It is possible to operate the systems in temperatures that exceed this range; however, de-rating and other means may need to be implemented which will require contacting the factory for assistance.

If air conditioning is needed to cool the room where the unit is to be installed, make sure the power losses of the unit are incorporated into the air conditioning needs. Power losses of the unit at full load can be found in the specifications for the unit. In addition, if the unit will operate at less than full load,

- **Figure 1.5** can be used in conjunction with the full load loss information to determine actual power losses.
- Determine number of, model of, and eventual placement of Current Transformers (CTs) that will be needed with the AHF(s). This is highly dependent on how the AHF(s) will be installed as discussed in following sections of this manual.

The HPS TruWave AHF works very well with a variety of loads; however, there are some instances where special considerations are needed:

- If line-to-neutral loads exist along with the 3-phase loads, external CTs monitoring all 3 line phases may be needed instead of the usual 2. If line-to-neutral loads draw appreciable current (more than 25% of the rated AHF current) through the neutral, some or all of those loads may need to be removed from the current that the CTs monitor. If you think this is a possible issue, contact the factory for assistance.
- Make sure there are no power factor corrective capacitors, passive filters (other than simple line reactors), harmonic trap filters, or other equipment containing sizable AC capacitor components in the load. Small amounts of line-to-line AC capacitance (e.g. used for emc reduction in some equipment) are acceptable. If you believe this is a possible issue, contact the factory for assistance.
- If operating from a generator or other high impedance source, sizable phase controlled loads (e.g. soft starters, some DC drives, etc.) may present a challenge. Also, very large types of these loads from even lower impedance sources may also present a challenge. If such loads are present, contact the factory for assistance.

3.2. PLACING AND WIRING A TYPE 1 ENCLOSED HPS TRUWAVE AHF

This equipment should only be installed by qualified personnel that have been trained to work with potentially hazardous voltages and associated electrical equipment.

The Type 1 enclosed AHF may be placed in an industrial environment that is protected from water, metal filings or other conductive impurities and corrosive chemicals. The area should not be subjected to an overwhelming amount of dust or dirt; otherwise, frequent cleaning of the system and replacement of the input air filter will be required.

Wall mounted systems must be mounted to a sturdy wall. They have 2 tabs on the top and 2 tabs on the bottom of the unit, on the back of the enclosure for bolting the unit to the wall. If a sturdy wall is not available, as an alternative, wall mounted systems may be bolted to a stand. Units bolted to a floor stand and floor-standing units (300 Amp AHFs) must be placed on a level surface. To provide mechanical stability, either the stand or floor-standing unit should be bolted to the floor using the holes provided, or the unit should otherwise be secured to insure the unit cannot tip over.

The wall-mounted units should be mounted so that there is a gap of at least 9” between the bottom of the enclosure and the floor. This distance is necessary to insure sufficient airflow into the box from the bottom. All units need a minimum of 9 inches of clearance between the top of the enclosure and any significant obstructions to allow adequate airflow out of the top of the box. The box should be positioned so that AC, chassis ground, and control wires can readily enter the top or bottom of the box on the right and left sides, indicated in the wiring instructions that follow. A minimum of 36” for a 300 amp, 30” for a 150 or 200 amp, and 24” for a 50 or 100 amp AHF of clearance in front of the unit is necessary to allow opening the door sufficiently to service the unit. A minimum of 1 inch of clearance is required on the left and right sides of all units.

Power wiring (consisting of conductors for the 3 phases and a chassis grounding wire) may enter the cabinet from either the top or the bottom of the enclosure. Top entry is preferred, but bottom entry is also acceptable. Wire sizes and conduit needs should be selected referring to Table 3.1 and to applicable electrical codes. Any power or ground wire selected that is larger than 3 awg should be derated, according to National Electric Code, to allow for the high frequency (400Hz) current produced by the AHF. CT wiring (and other optional control wiring) can also enter the cabinet from either the top or bottom of the enclosure. Again, top entry is preferred, but bottom entry is also acceptable. Figure 3.1 reviews all of the clearance specifications and shows top and bottom wire entry options into the enclosures.

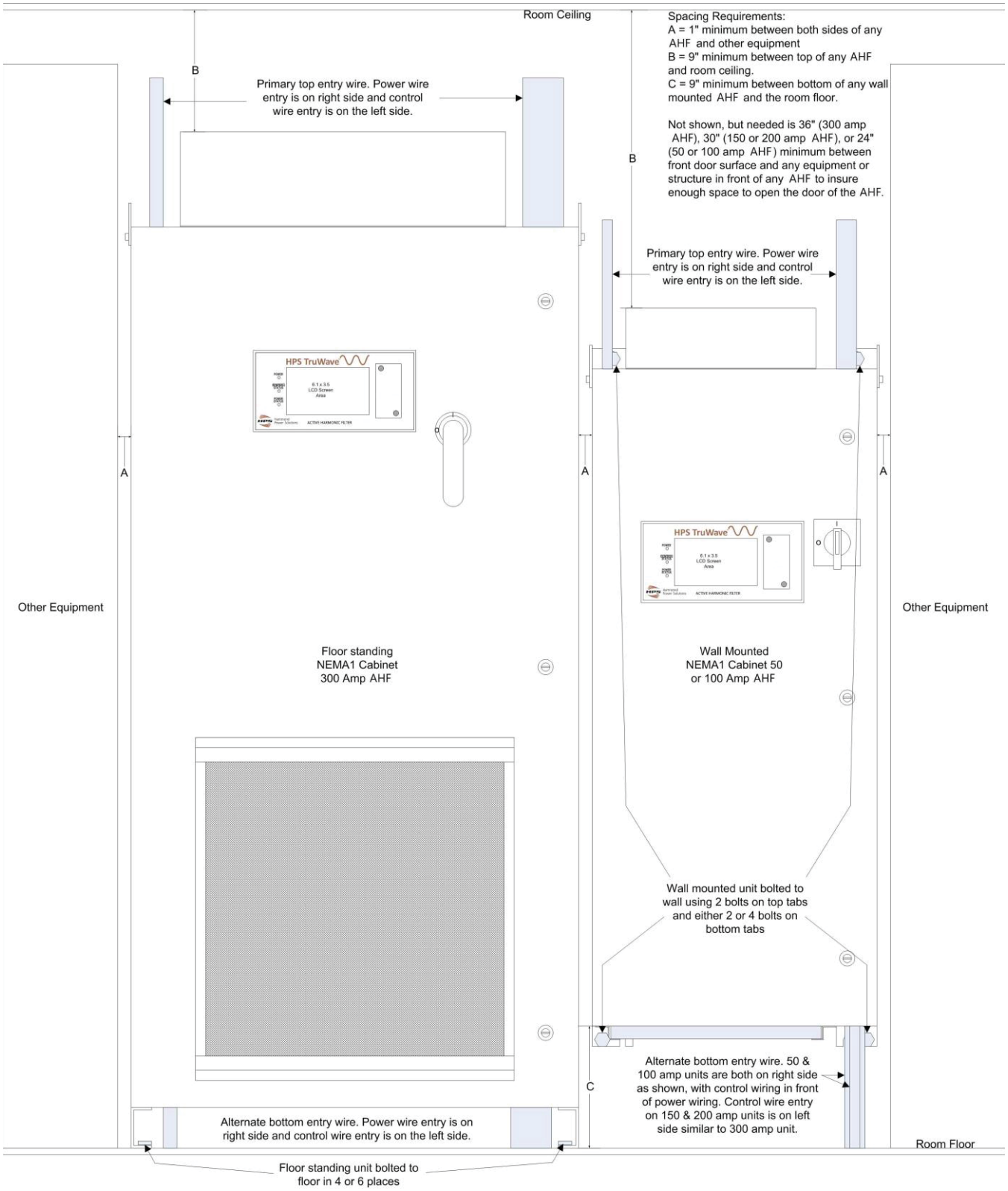

Figure 3.1: Installation Showing Clearances and Wire Entry

Pilot holes exist where the entrance to the enclosure for all wiring is to occur. These pilot holes can be enlarged, using a standard punch, to accommodate conduit fittings for the power and/or CT wiring to be used. Drilling or filing should be avoided, as any metal particles that fall inside the unit could interfere with

the operation of the electrical/electronic components of the system. Although the Type 1 enclosed AHFs have UL listed power fuses and a disconnect switch, electrical codes will probably require a 3-phase breaker or a fused disconnect at the point 3-phase power is tapped for the AHF to protect the wiring between the tapped point and the AHF. Table 3.1 includes power wiring information for all Type 1 packaged AHFs. The 2nd column contains the rating of the internal power fuses, which is also the recommended rating of the external feeder breaker or fuses to use.

The 3rd column shows the maximum size wire that the unit can accommodate. In the case of the 300 amp system, if conductors larger than 300kcmil need to be used, 2 equal sized conductors (each up to 300kcmil in size) must be used for each phase instead of a single very large conductor. The 300 amp AHF power switch requires the wires to be terminated with ring-type terminals. If using more than one conductor per phase, one wire gets bolted to the front of the switch terminal and the 2nd wire to the back of the switch terminal. All other units use one wire (with no terminal) per phase.

If electrical code requires the wires to be housed within conduit, the 4th and 5th columns show the maximum amount the diameter that any conduit hardware can occupy before that hardware could start to interfere with enclosure items. The 4th column is for wires/conduit entering from the top and the 5th column is for wires/conduit entering from the bottom of the enclosure. These dimensions assume that the pilot hole is enlarged so that the center of the enlarged hole is the same as the center of the original pilot hole. Slightly less room is available when using bottom entry for units up to 200 amps because of the bottom mounted filter on those units. The 6th column indicates the maximum conduit trade size that "should" be able to be used without the conduit hardware interfering with enclosure items. The conduit size shown again assumes concentrically enlarged pilot holes and use of "standard" conduit hardware. Before settling on a conduit size, make sure all of the conduit hardware will fit within the diameter shown in column 4 or 5. For the 300 amp AHF, 2 conduit pilot holes are provided on both the top and bottom of the unit for the power wiring. The 7th column indicates the torque needed to properly tighten the power wires to the power switch. The 8th column indicates the torque needed to bolt the power fuses to the blocks.

The following sub-sections provide details about wire entry into and within the enclosure for the 3 different enclosure sizes: 50 or 100 amp, 150 or 200 amp, and 300 amp systems. Refer to section 3.4 for details of where to connect the power wires and the CT wires.

AHF Size (Amps)	Circuit breaker or fused current rating	Maximum Wire Gage (Use 75C or equiv. copper wire only)	Max. Conduit hardware Dia. box allows		Maximum Conduit Size*	Torque (in-lbs)	
			Top Entry	Bottom Entry		Power Switch	Bolts for power fuses
50	70	1/0	4.3"	3.8"	2 ½ - 3	27	72
100	125	3/0	4.3"	3.8"	2 ½ - 3	132	132
150	200	250kcmil	4.8"	4.5"	3 - 3 ½	132	132
200	250	250kcmil	4.8"	4.5"	3 - 3 ½	228	228
300	400	2 conductors, each 300kcmil max	5.0"	5.0"	3 ½ - 4	228	228
*Make sure conduit hardware will fit in "Max. Conduit hardware Dia. box allows" for your unit.							

Table 3.1: Type 1 Enclosure Power Wiring Information

3.2.1. WIRING A 50 OR 100 AMP TYPE 1 ENCLOSED AHF

Figure 3.2 shows the position of the pilot holes in the top of the 50 or 100 amp AHF enclosure when using top entry into the enclosure for both the power and CT wiring (and possibly other optional control wiring). Top entry is preferred over bottom entry because the wiring for both the power and CTs is a direct shot. The 1.125" diameter pilot hole on the right side is for the 3 power wires and the chassis ground, and is large enough for ¾" conduit. This will have to be enlarged to the size needed to meet the electrical code using a punch. Care should be taken that no metal shavings are allowed to fall into the interior of the enclosure when using the punch. The punch should be centered within the pilot hole to

insure that the new hole has its center in the same place. Failing to center the punch may result in less space being available for conduit mounting hardware. Power wires will be connected, in almost a straight shot, from this opening to the top terminals of the power switch. The chassis ground wire should be terminated to a ¼" ring terminal or similar. A ¼-20 stud is available inside the upper right side of the cabinet for connecting this chassis ground wire.

The 7/8" diameter pilot hole on the left side is for CT wiring (and possibly other optional control wiring) to enter the box, and is large enough for ½" conduit. If necessary, this hole can also be enlarged using a punch to accommodate a larger conduit size. CT wiring will be connected, in almost a straight shot, from this opening to the green P1 connector on the CT Interface PC board.

Figure 3.3 shows the position of the pilot holes in the bottom of the 50 or 100 amp AHF enclosure when using bottom entry into the enclosure for both the power and CT wiring (and possibly other optional control wiring). If using bottom entry power wiring, the back 7/8" pilot hole on the right side of the bottom will need to be enlarged with a punch to the size needed. The power wires and chassis ground should be routed from this enlarged opening as follows. The chassis ground wire should be terminated to a ¼" ring terminal or similar. A ¼-20 stud is available inside the lower right side of the cabinet for connecting this chassis ground wire. The power wires should be routed up the right side of the rear of the enclosure to beyond the top of the power switch. Utilize the space above the power switch to bend the wires so they may be connected into the top terminals of the switch. Figure 3.8 shows the power wire routing in a 300 amp AHF. The internal power wire routing is similar for the 50 or 100-amp unit as well.

On the way up to the power switch, the power wires need to pass behind the "Divider panel" within the unit. The section above this panel has warmer air that will be exhausted out the top of the enclosure, while the section below this panel has cooler air drawn in through the unit's air filter. This panel acts as a barrier to prevent the warm air remixing with the cooler input air. Figure 3.9 shows a top view of this divider. To make room for the power wires to pass, a section "B", of the rubber insulation material will have to be removed. In addition, a portion of the insulating piece "A (right)", marked "C" in the figure may need to be trimmed off. If so, remove screw holding "A (right)", trim only enough off the end indicated by "C" in the figure using tin-snips or heavy-duty scissors, then re-attach "A (right) with the screw.

The front 7/8" diameter pilot hole on the right side of the bottom is for CT wiring (and possibly other optional control wiring), and is large enough for ½" conduit. If necessary, this hole can also be enlarged using a punch to accommodate a larger conduit size. CT wiring should be immediately routed over to the internal left side and up the left side of the rear of the enclosure to the CT Interface board. This path is very similar to the one shown in Figure 3.8, except the pilot hole for the CT Interface wires is on the right side of the bottom in the 50 or 100 amp AHF and on the left side on the bottom in the 300 amp AHF. A portion of the rubber insulation, marked "D" in Figure 3.9, will need to be removed to accommodate the wiring to pass behind the "Divider Panel".

Any optional control wires can be either routed on the left side of the back panel, up to the top of the unit for top entry or down to the bottom for bottom entry similar to what is shown in Figure 3.8. The CT and optional control wires should not enter/exit the enclosure through the same hole as the power wiring. The optional control wires may enter/exit the enclosure through a different hole than the CT wiring. Neither the CT or optional control wires have to enter the same end (top or bottom) that the power wiring enters.

Units equipped with floor stands do not normally have bottom entry for wiring as a possibility. Consult the factory beforehand if bottom entry for a system to be equipped with a floor stand is needed.

3.2.2. WIRING A 150 OR 200 AMP TYPE 1 ENCLOSED AHF

Figure 3.4 shows the position of the pilot holes in the top of the 150 or 200 amp AHF enclosure when using top entry into the enclosure for both the power and CT wiring (and possibly other optional control wiring). Top entry is preferred over bottom entry because the wiring for both the power and CTs is a direct shot. The 1.375" diameter pilot hole on the right side is for the 3 power wires and the chassis ground, and is large enough for 1" conduit. This will have to be enlarged to the size needed to meet the electrical code using a punch. Care should be taken that no metal shavings are allowed to fall into the interior of the enclosure when using the punch. The punch should be centered within the pilot hole to insure that the new hole has its center in the same place. Failing to center the punch may result in less space being available for conduit mounting hardware. Power wires will be connected, in almost a straight shot, from this opening to the top terminals of the power switch. The chassis ground wire should be terminated to a ¼" ring terminal or similar. A ¼-20 stud is available inside the upper right side of the cabinet for connecting this chassis ground wire.

The 7/8" diameter pilot hole on the left side is for CT wiring (and possibly other optional control wiring) to enter the box, and is large enough for ½" conduit. If necessary, this hole can also be enlarged using a punch to accommodate a larger conduit size. CT wiring will be connected, in almost a straight shot, from this opening to the green P1 connector on the CT Interface PC board.

Figure 3.5 shows the position of the pilot holes in the bottom of the 150 or 200 amp AHF enclosure when using bottom entry into the enclosure for both the power and CT wiring (and possibly other optional control wiring). If using bottom entry power wiring, the 7/8" pilot hole on the right side of the bottom will need to be enlarged with a punch to the size needed. The power wires and chassis ground should be routed from this enlarged opening as follows. The chassis ground wire should be terminated to a ¼" ring terminal or similar. A ¼-20 stud is available inside the lower right side of the cabinet for connecting this chassis ground wire. The power wires should be routed up the right side of the rear of the enclosure to beyond the top of the power switch. Utilize the space above the power switch to bend the wires so they may be connected into the top terminals of the switch. Figure 3.8 shows the power wire routing in a 300 amp AHF. The internal power wire routing is similar for the 150 or 200 amp unit as well.

On the way up to the power switch, the power wires need to pass behind the "Divider panel" within the unit. The section above this panel has warmer air that will be exhausted out the top of the enclosure, while the section below this panel has cooler air drawn in through the unit's air filter. This panel acts as a barrier to prevent the warm air remixing with the cooler input air. Figure 3.10 shows a top view of this divider. To make room for the power wires to pass, a section "B", of the rubber insulation material will have to be removed. In addition, a portion of the insulating piece "A (right)", marked "C" in the figure may need to be trimmed off. If so, remove screw holding "A (right)", trim only enough off the end indicated by "C" in the figure using tin-snips or heavy-duty scissors, then re-attach "A (right) with the screw.

The 7/8" diameter pilot hole on the left side of the bottom is for CT wiring (and possibly other optional control wiring), and is large enough for ½" conduit. If necessary, this hole can also be enlarged using a punch to accommodate a larger conduit size. CT wiring should be routed up the left side of the rear of the enclosure to the CT Interface board. This path is very similar to the one shown in Figure 3.8 for a 300 amp AHF. A portion of the rubber insulation, marked "D" in Figure 3.10, will need to be removed to accommodate the wiring to pass behind the "Divider Panel".

Any optional control wires can be either routed on the left side of the back panel, up to the top of the unit for top entry or down to the bottom for bottom entry similar to what is shown in Figure 3.8. The CT and optional control wires should not enter/exit the enclosure through the same hole as the power wiring. The optional control wires may enter/exit the enclosure through a different hole than the CT wiring. Neither the CT or optional control wires have to enter the same end (top or bottom) that the power wiring enters.

Units equipped with floor stands do not normally have bottom entry for wiring as a possibility. Consult the factory beforehand if bottom entry for a system to be equipped with a floor stand is needed.

3.2.3. WIRING A 300 AMP TYPE 1 ENCLOSED AHF

Figure 3.6 shows the position of the pilot holes in the top of the 150 or 200 amp AHF enclosure when using top entry into the enclosure for both the power and CT wiring (and possibly other optional control wiring). Top entry is preferred over bottom entry because the wiring for both the power and CTs is a direct shot. The 1.375" diameter pilot hole on the right side is for the 3 power wires and the chassis ground, and is large enough for 1" conduit. This will have to be enlarged to the size needed to meet the electrical code using a punch. Care should be taken that no metal shavings are allowed to fall into the interior of the enclosure when using the punch. The punch should be centered within the pilot hole to insure that the new hole has its center in the same place. Failing to center the punch may result in less space being available for conduit mounting hardware. Since the power wires for a 300 Amp AHF will undoubtedly consist of two paralleled wires per phase, the option exists for bringing all six power conductors and the chassis ground through either one large conduit/hole or 2 smaller conduits/holes. If 2 are to be used, a 2nd pilot hole (7/8" diameter) is provided behind the 1.375" diameter pilot hole which can be enlarged with a punch. When using 2 conduits to bring in the power wires, one set of all 3 phases should occupy one conduit and the 2nd (paralleled) set of 3 phases should occupy the other conduit. This will minimize lead inductance compared to splitting the phases between the 2 conduits. Power wires will be connected, in almost a straight shot, from this opening to the top terminals of the power switch. All wires will need to be terminated with 3/8" ring terminals or equivalent. The 2 wires of each phase will be bolted to a power switch terminal such that one wire is mounted to the front of the terminal and the other is mounted to the back of the terminal. The chassis ground wire should be terminated to a ¼" ring terminal or similar. A ¼-20 stud is available inside the upper right side of the cabinet for connecting this chassis ground wire.

The 7/8" diameter pilot hole on the left side is for CT wiring (and possibly other optional control wiring) to enter the box, and is large enough for ½" conduit. If necessary, this hole can also be enlarged using a punch to accommodate a larger conduit size. CT wiring will be connected, in almost a straight shot, from this opening to the green P1 connector on the CT Interface PC board.

Figure 3.7 shows the position of the pilot holes in the bottom of the 300 amp AHF enclosure when using bottom entry into the enclosure for both the power and CT wiring (and possibly other optional control wiring). Two 7/8" pilot holes are provided on the right side of the bottom panel for power wiring entry. If only one large conduit is used for the power wiring, either pilot hole can be enlarged for that conduit. If 2 smaller conduits are used for the power wiring, both will need to be enlarged for power wire entry. When using 2 conduits to bring in the power wires, one set of all 3 phases should occupy one conduit and the 2nd (paralleled) set of 3 phases should occupy the other conduit. This will minimize lead inductance compared to splitting the phases between the 2 conduits. The power wires and chassis ground should be routed from this enlarged opening(s) as follows. The chassis ground wire should be terminated to a ¼" ring terminal or similar. A ¼-20 stud is available inside the lower right side of the cabinet for connecting this chassis ground wire. The power wires should be routed up the right side of the rear of the enclosure to beyond the top of the power switch. Utilize the space above the power switch to bend the wires so they may be connected into the top terminals of the switch. Figure 3.8 shows the power wire routing in a 300 amp AHF.

On the way up to the power switch, the power wires need to pass behind the "Divider panel" within the unit. The section above this panel has warmer air that will be exhausted out the top of the enclosure, while the section below this panel has cooler air drawn in through the unit's air filter. This panel acts as a barrier to prevent the warm air remixing with the cooler input air. Figure 3.11 shows a top view of this divider. To make room for the power wires to pass, a section "B", of the rubber insulation material will have to be removed. In addition, a portion of the insulating piece "A (right)", marked "C" in the figure

may need to be trimmed off. If so, remove screw holding “A (right)”, trim only enough off the end indicated by “C” in the figure using tin-snips or heavy-duty scissors, then re-attach “A (right) with the screw.

The 7/8” diameter pilot hole on the left side of the bottom is for CT wiring (and possibly other optional control wiring), and is large enough for ½” conduit. If necessary, this hole can also be enlarged using a punch to accommodate a larger conduit size. CT wiring should be routed up the left side of the rear of the enclosure to the CT Interface board. This path is shown in Figure 3.8 for a 300 amp AHF. A portion of the rubber insulation, marked “D” in Figure 3.11, will need to be removed to accommodate the wiring to pass behind the “Divider Panel”.

Any optional control wires can be either routed on the left side of the back panel, up to the top of the unit for top entry or down to the bottom for bottom entry as shown in Figure 3.8. The CT and optional control wires should not enter/exit the enclosure through the same hole as the power wiring. The optional control wires may enter/exit the enclosure through a different hole than the CT wiring. Neither the CT or optional control wires have to enter the same end (top or bottom) that the power wiring enters.

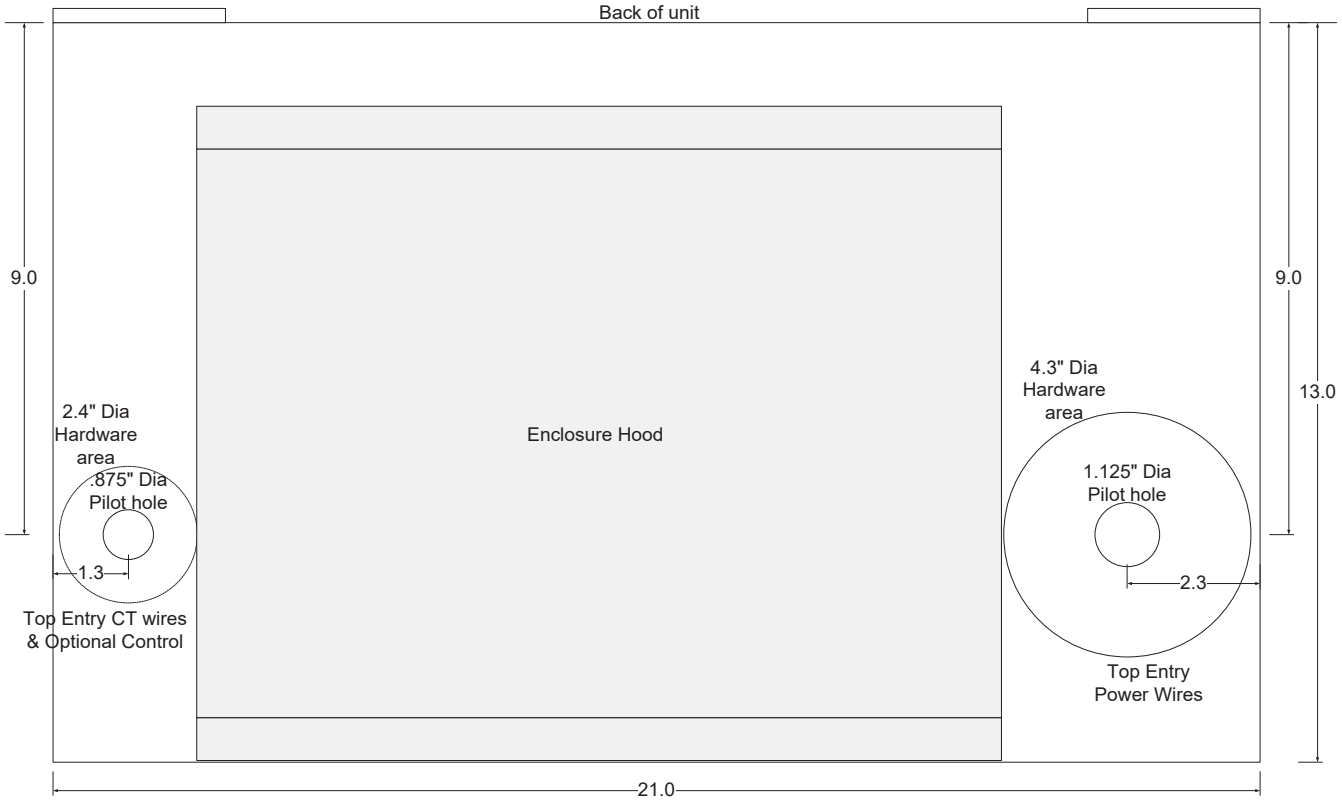

Figure 3.2: 50 or 100 Amp AHF TYPE 1 Cabinet Top Wire Entry

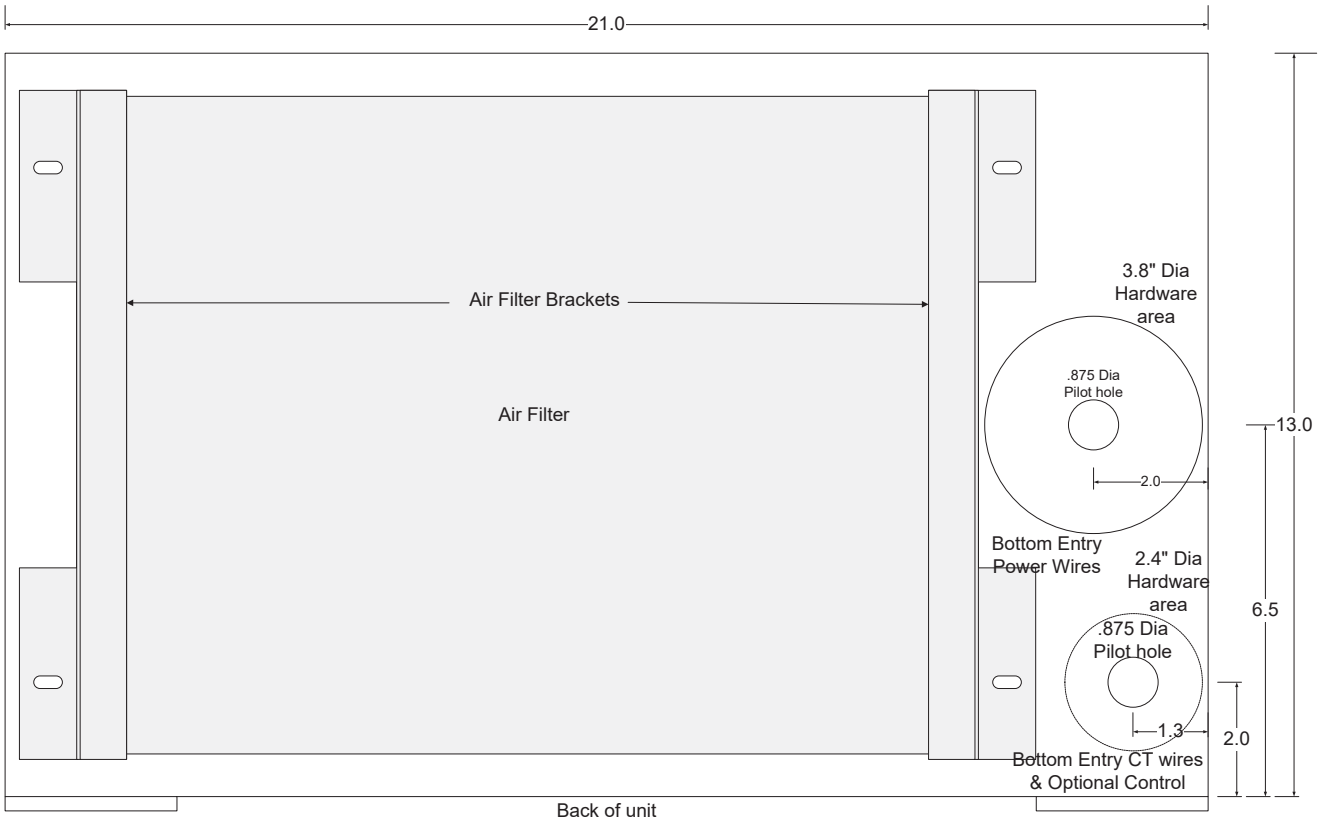

Figure 3.3: 50 or 100 Amp AHF TYPE 1 Cabinet Bottom Wire Entry

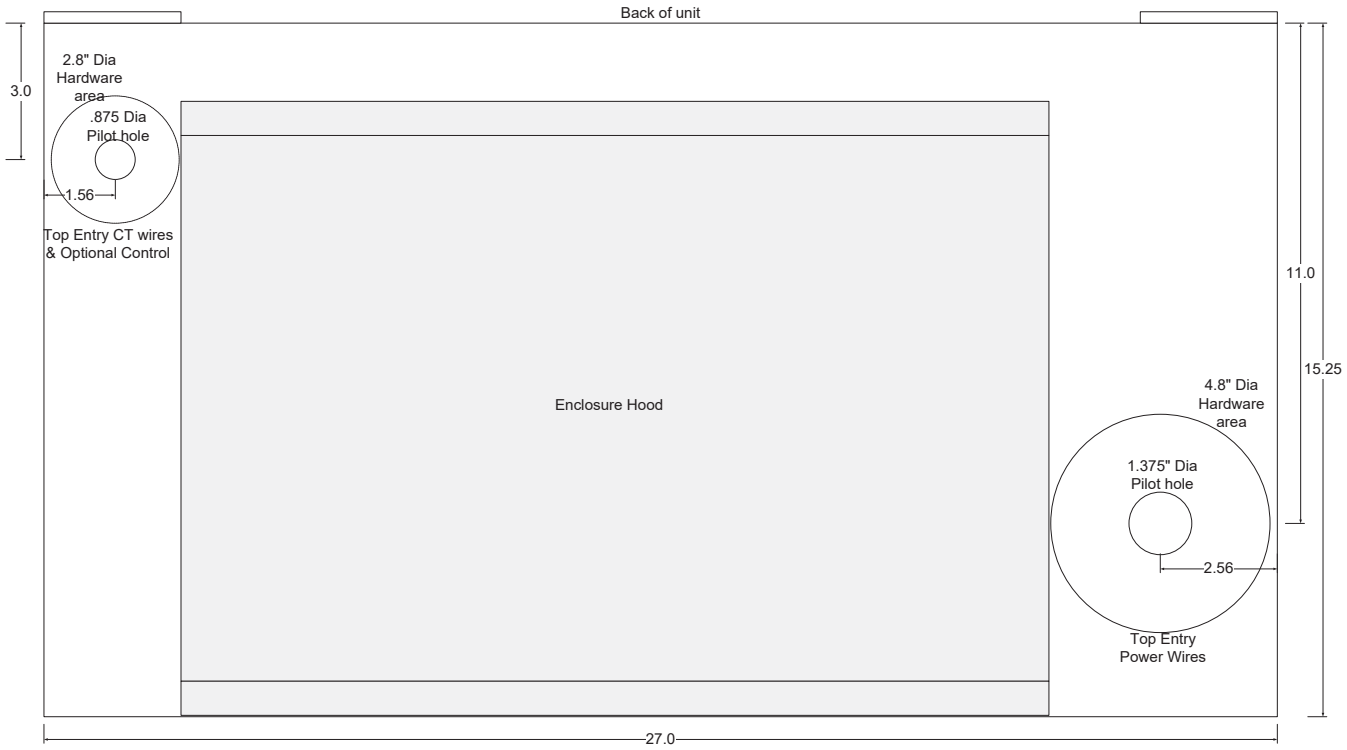

Figure 3.4: 150 or 200 Amp AHF TYPE 1 Cabinet Top Wire Entry

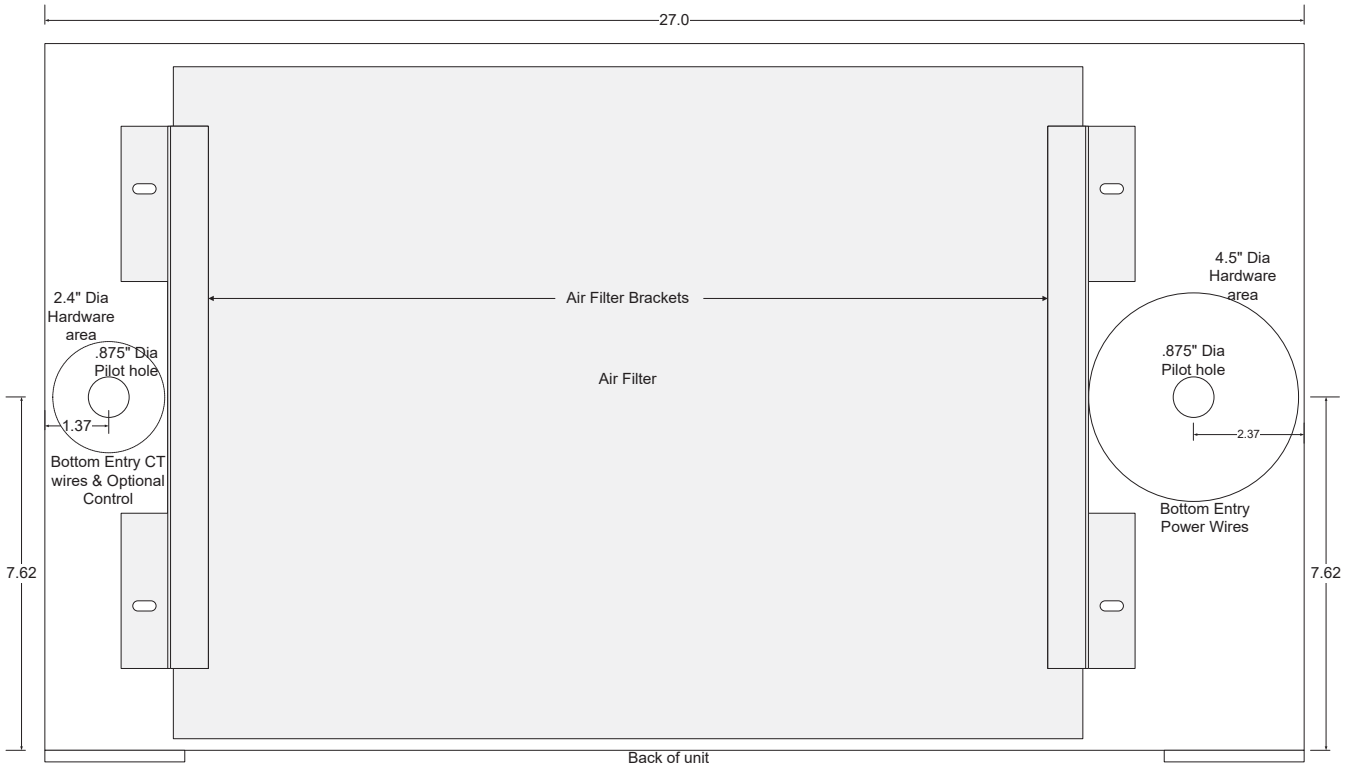

Figure 3.5: 150 or 200 Amp AHF TYPE 1 Cabinet Bottom Wire Entry

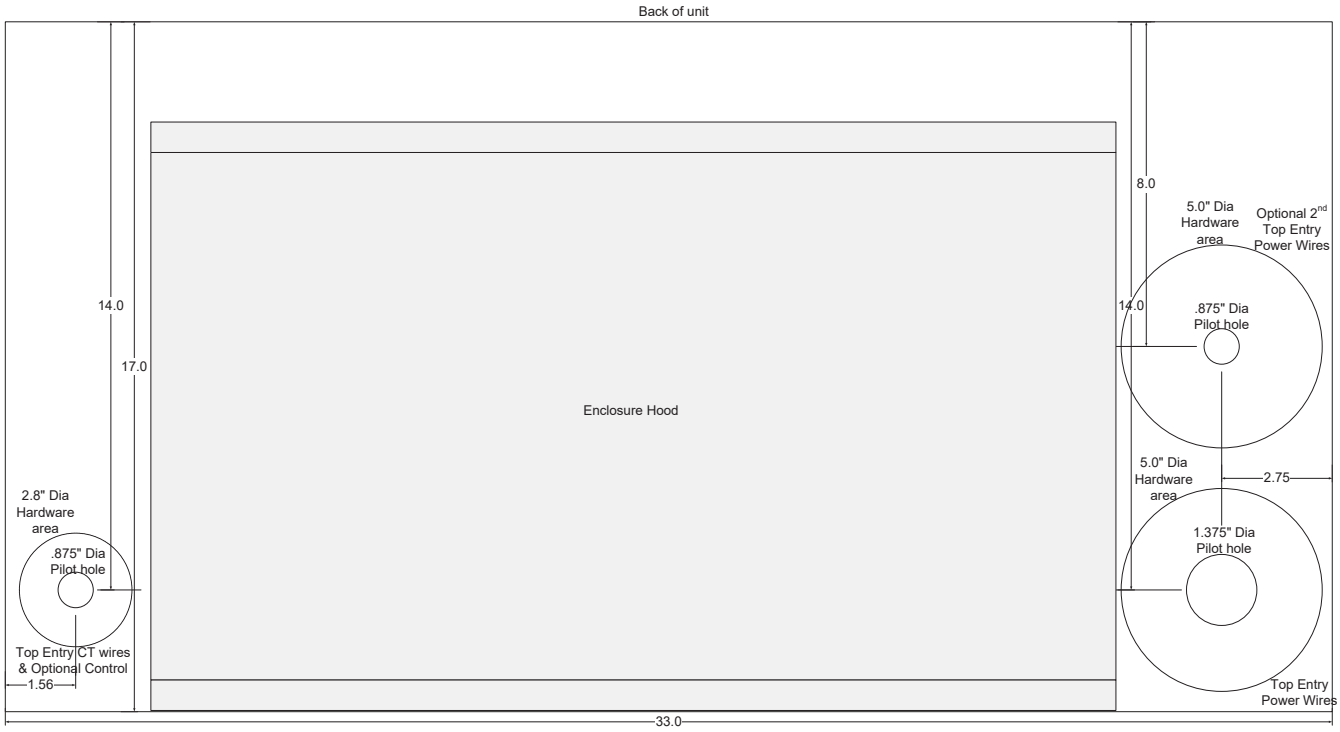

Figure 3.6: 300 Amp AHF TYPE 1 Cabinet Top Wire Entry

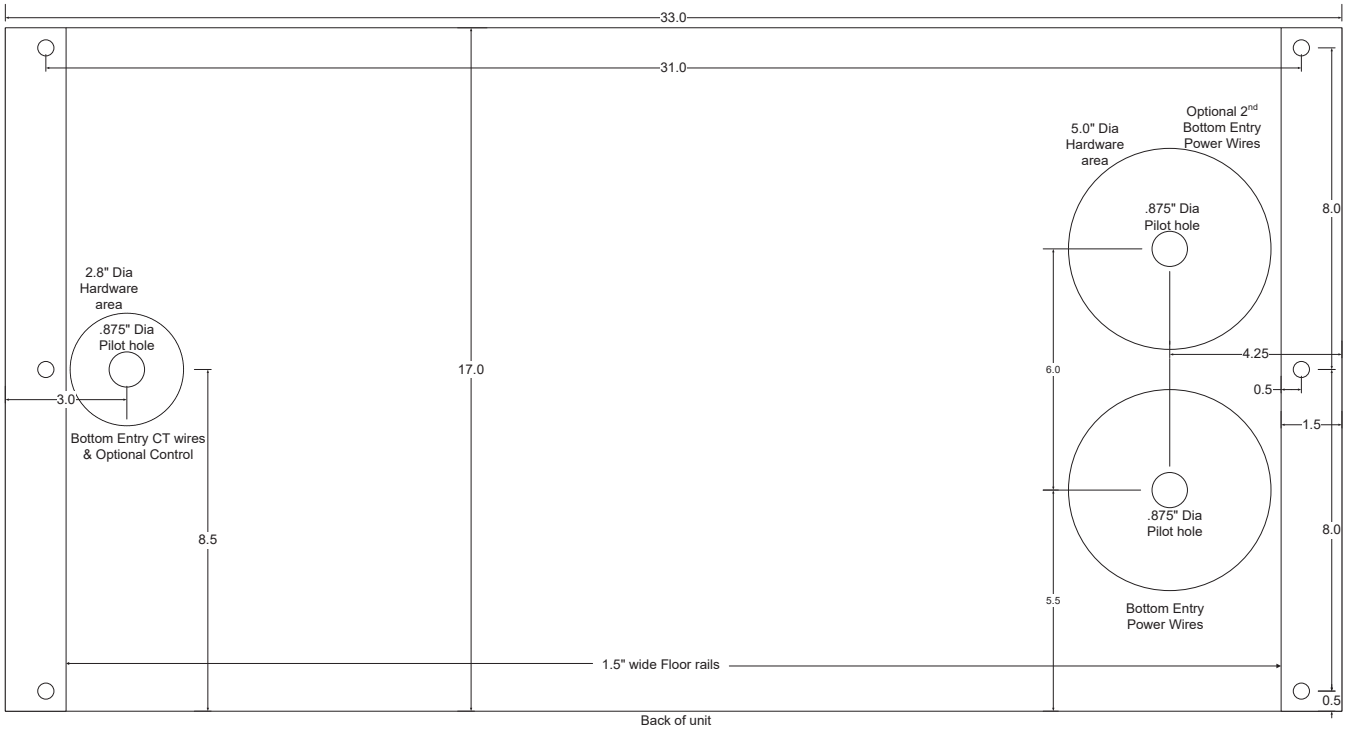

Figure 3.7: 300 Amp AHF TYPE 1 Cabinet Bottom Wire Entry

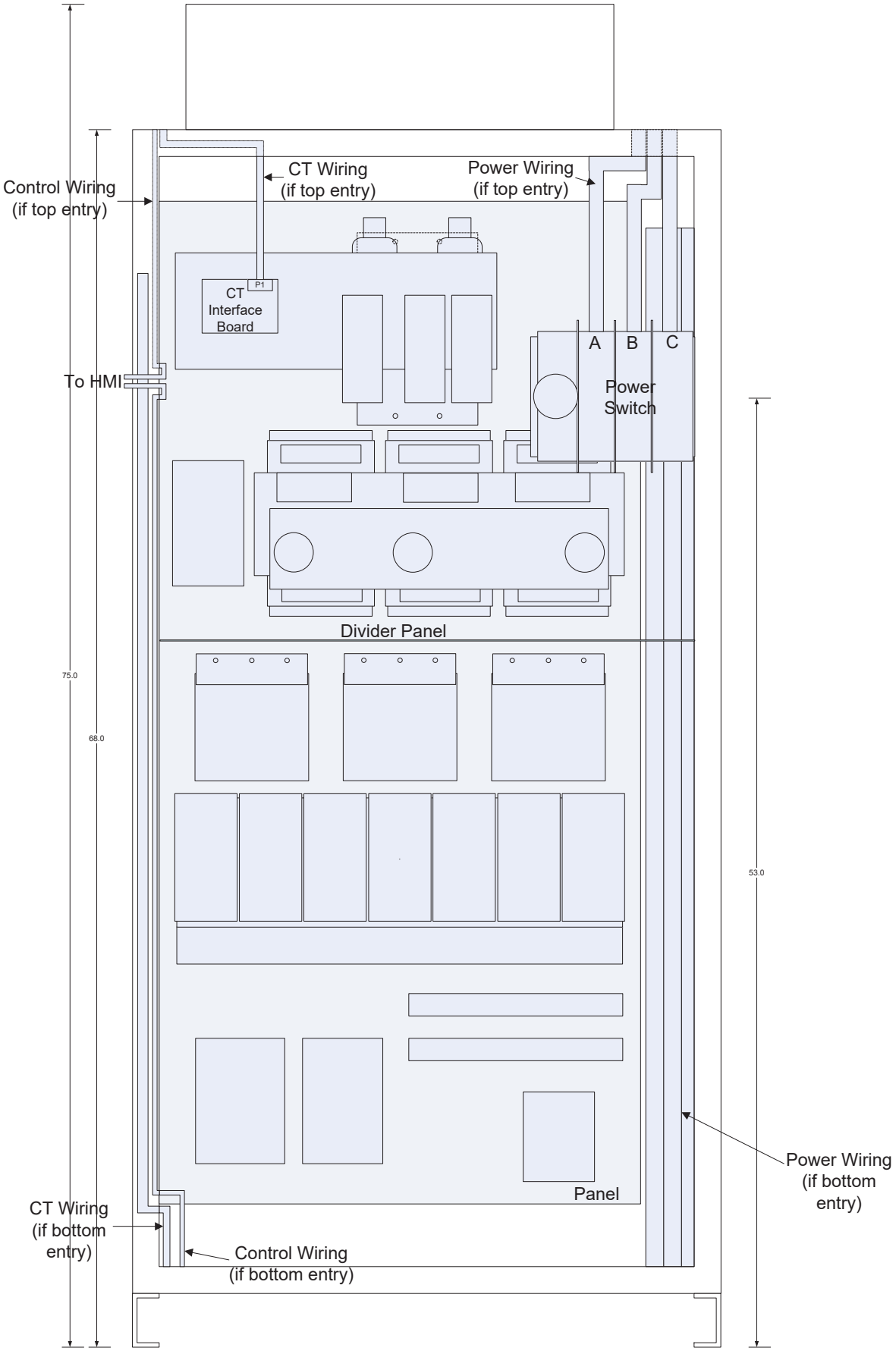

Figure 3.8: TYPE 1 Enclosure Wire Routing

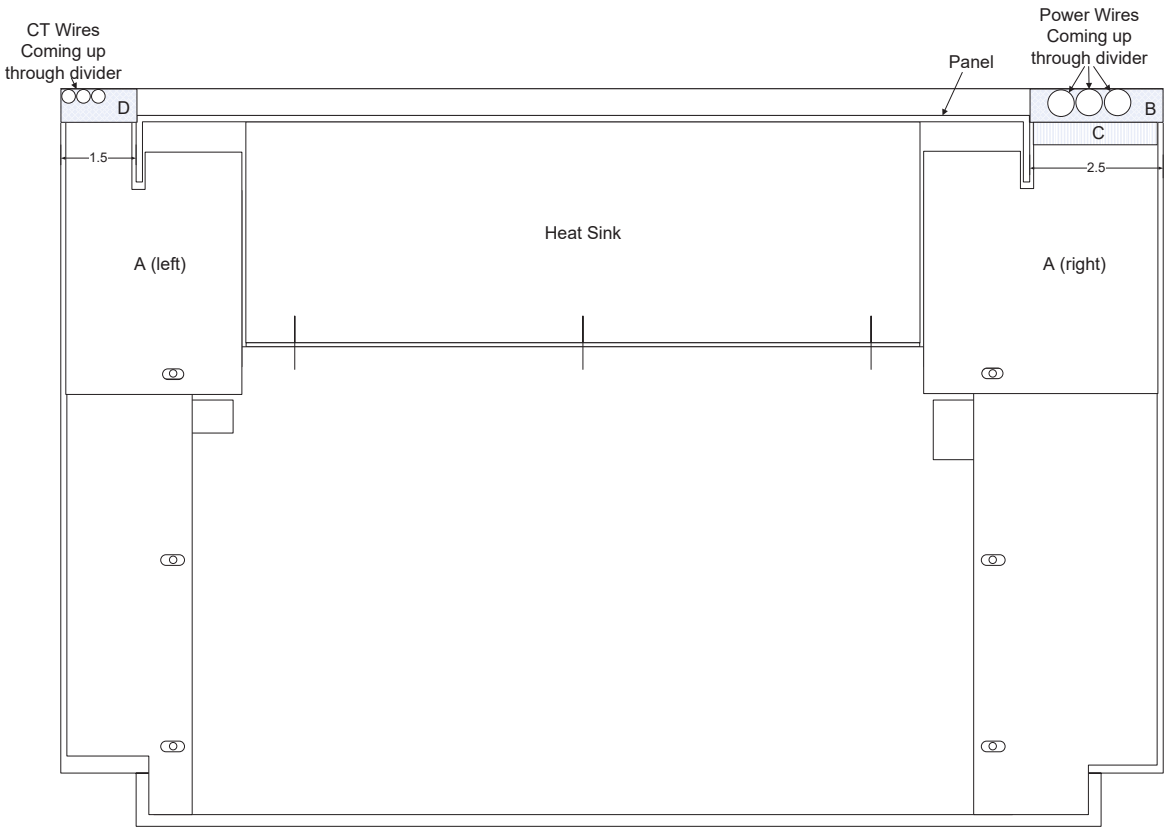

Figure 3.9: 50 or 100 Amp AHF TYPE 1 Wire Passage Through Divider Panel

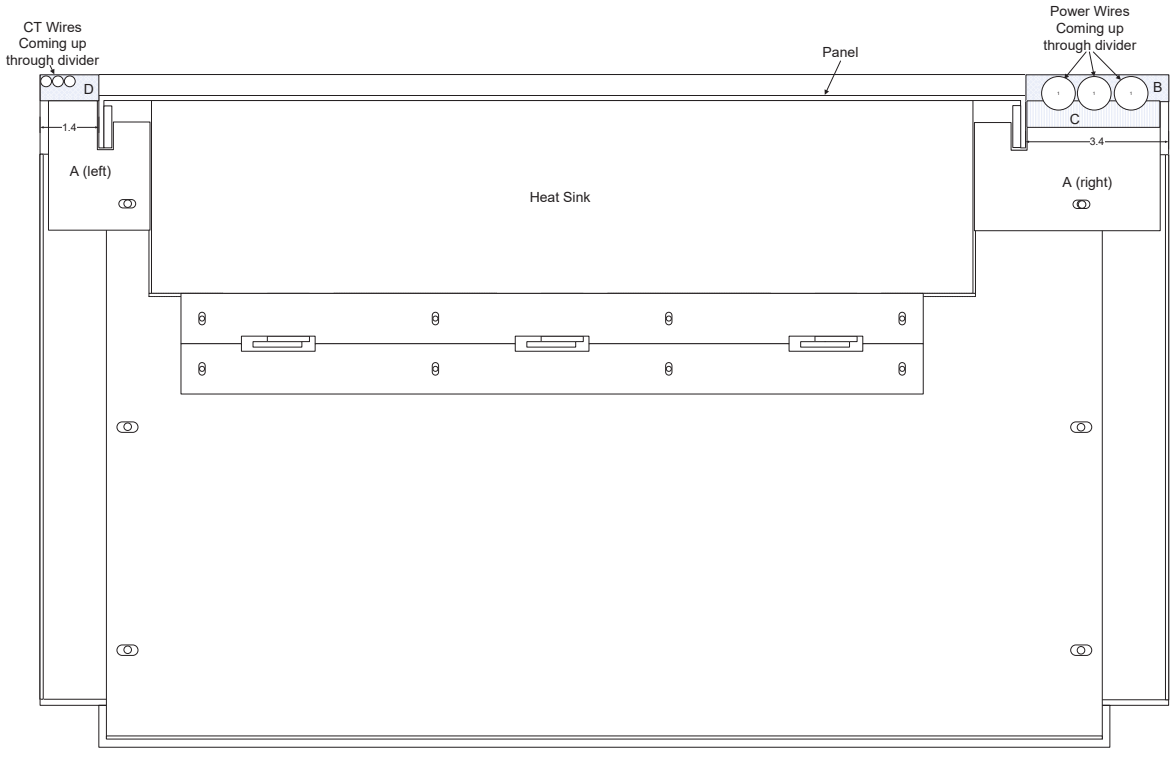

Figure 3.10: 150 or 200 Amp AHF TYPE 1 Wire Passage Through Divider Panel

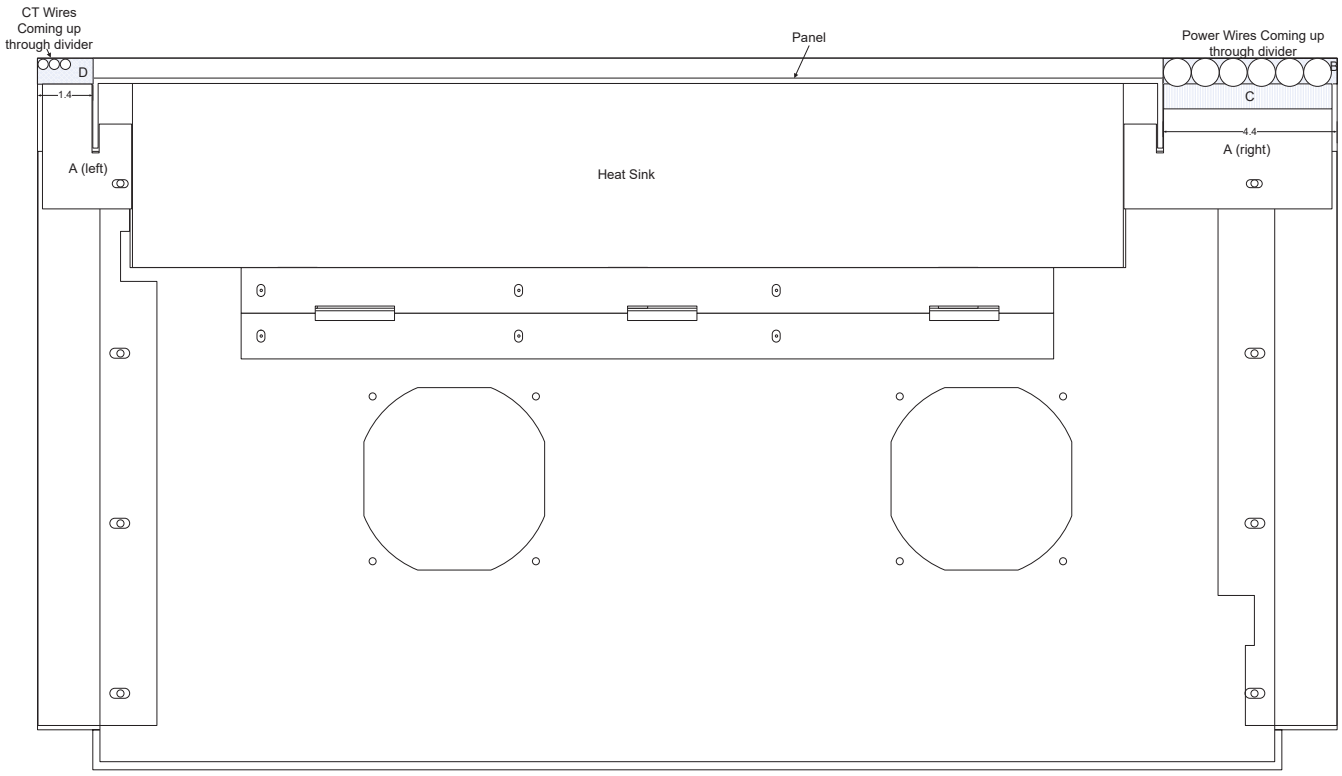

Figure 3.11: 300 Amp AHF TYPE 1 Wire Passage Through Divider Panel

3.3. INSTALLING AND WIRING AN AHF PANEL

AHF panels must be installed inside an industrial enclosure such as an MCC cabinet before they can be used. A panel is mounted inside an enclosure using the 6 holes in the panel. Machine screws holding AHF components to the panel may protrude up to 0.23” beyond the back surface of the panel. Because of this, at least ¼” thick spacers may need to be added between the rear surface of the panel and the mounting surface of the enclosure to avoid any of these protruding screws from preventing the panel from being tightened down. When installed, no ungrounded bare metal (e.g. power fuses and fuse blocks, aluminum bus-work connecting the large cylindrical Electrolytic capacitors together, etc.) on the AHF panel should come within 1” of any enclosure metal. Refer to the panel layout for your particular panel in Section 10 for panel dimensions and locations of ungrounded bare metal to avoid.

An HMI (Human Machine Interface) containing a resistive touch screen LCD display and signal interfaces (e.g. Ethernet connection, an external disable input, status relay outputs, and an optional industrial signal interface such as Ethernet/IP) is provided in a protective metal enclosure with each AHF panel. The front door of the enclosure should have the rectangular cutout and 6 holes shown in Figure 3.12 to accommodate this HMI, which is mounted from the exterior. The HMI protective “box” protrudes 1.67” beyond the inside surface of the door. Because of this, the placement of the panel should be such that no part of this protruding portion of the HMI box comes within 1” of any ungrounded metal on the AHF panel. Figure 3.13 shows the dimensions and location of the box within the front panel. A 300-amp panel has the additional requirement that the box should not come within 1.5” of the 3 drum inductors when the door of the enclosure is closed.

Table 3.2, Figure 3.14 (if panel is a 50, 100, 150, or 200 amp AHF) or Figure 3.15 (if panel is a 300 amp AHF), and the panel layout drawing for your panel found in Section 10 can be used to determine where the HMI is allowed to be located vertically on your enclosure’s door. If the dimension “A”, the distance between the back surface of the AHF panel and the inside surface of the enclosure door is less than the distance indicated in Table 3.2 where there is no restriction on the vertical location of the front panel, the front panel must be located in the vertical areas indicated in the table and referenced figures. An alternative would be to make a frame that protrudes out the front of your enclosure that houses the display so that the display back doesn’t protrude into the cabinet.

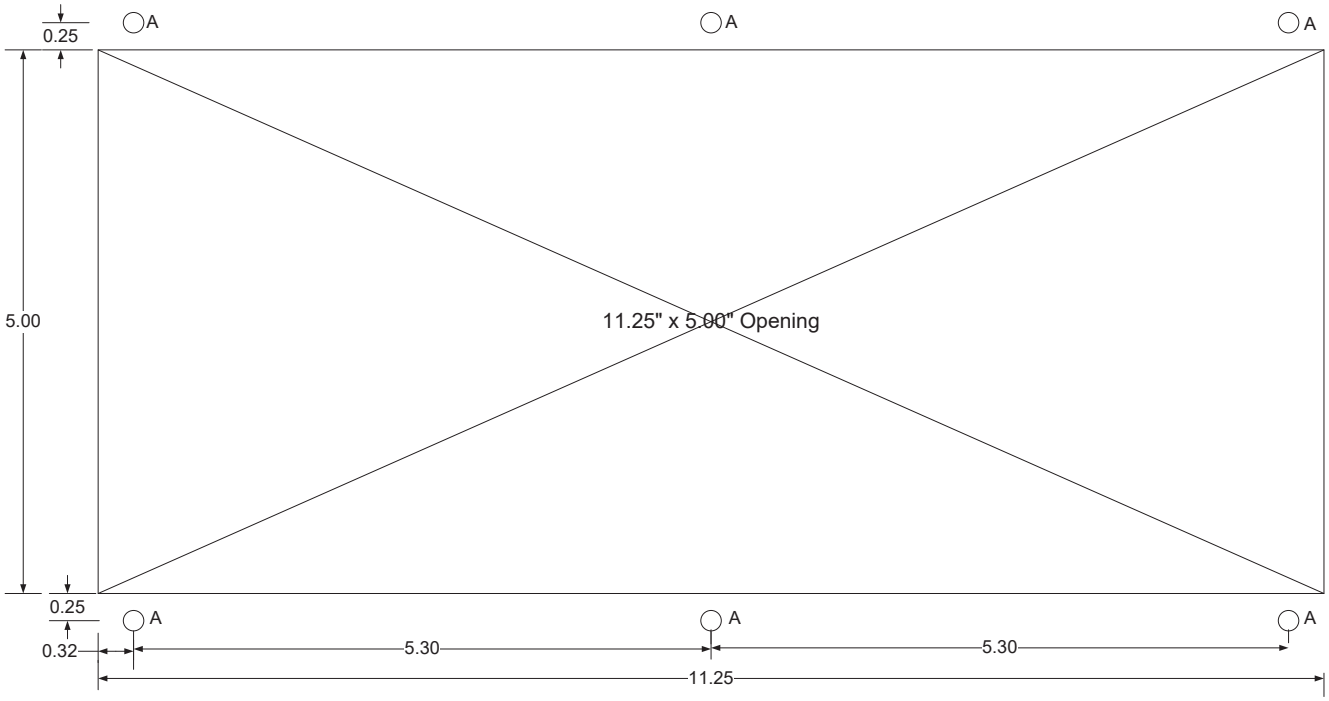

HOLE “A” (6 PLACES) - #3/16 DRILL 0.188 DIA

Figure 3.12: HMI Enclosure Cutout Pattern

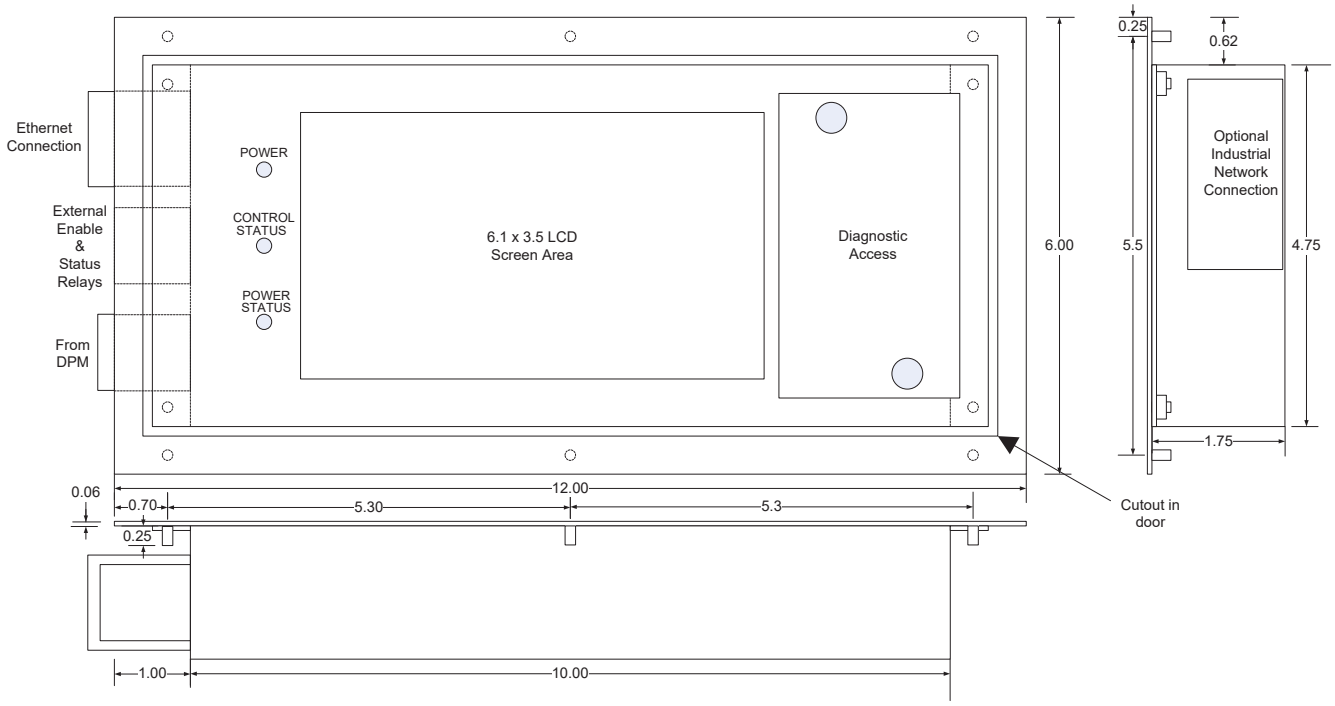

Figure 3.13: HMI Dimensions

Table 3.2: Cabinet Depth Design Guidelines for Panels

Refer to Figure 3.14 for 50-200 amp panels or Figure 3.15 for 300 amp panels for definition of dim. A and areas B through G; and refer to panel layout drawing for your size panel in section 10 to determine location and vertical size of areas.

AHF Size (Amps)	Distance from back surface of panel to inside surface of door (dim. A)	Vertical location of HMI 10” x 4.75” box that protrudes into the cabinet enclosure
300	14”	Minimum allowed distance for this panel
	≥ 14” and < 15.38”	Box must be located within area B, C, or E
	≥ 15.38” and < 15.75”	Box must be located in area B, C, D, or E
	≥ 15.75”	No restrictions on position of front panel
200	13.7”	Minimum allowed distance for this panel
	≥ 13.7 and < 14.37”	Box must be located in area B or G
	≥ 14.37” and < 15.59”	Box must be located in area B, F or G
	≥ 15.59”	No restrictions on position of front panel
150	13.0”	Minimum allowed distance for this panel
	≥ 13.0 and < 14.37”	Box must be located in area B or G
	≥ 14.37” and < 14.7”	Box must be located in area B, F or G
	≥ 14.7”	No restrictions on position of front panel
100	13.0”	Minimum allowed distance for this panel
	≥ 13.0 and < 14.37”	Box must be located in area B or G
	≥ 14.37” and < 14.98”	Box must be located in area B, F or G
	≥ 14.98”	No restrictions on position of front panel
50	13.0”	Minimum allowed distance for this panel
	≥ 13.0 and < 13.87”	Anywhere except area F
	≥ 13.87”	No restrictions on position of front panel

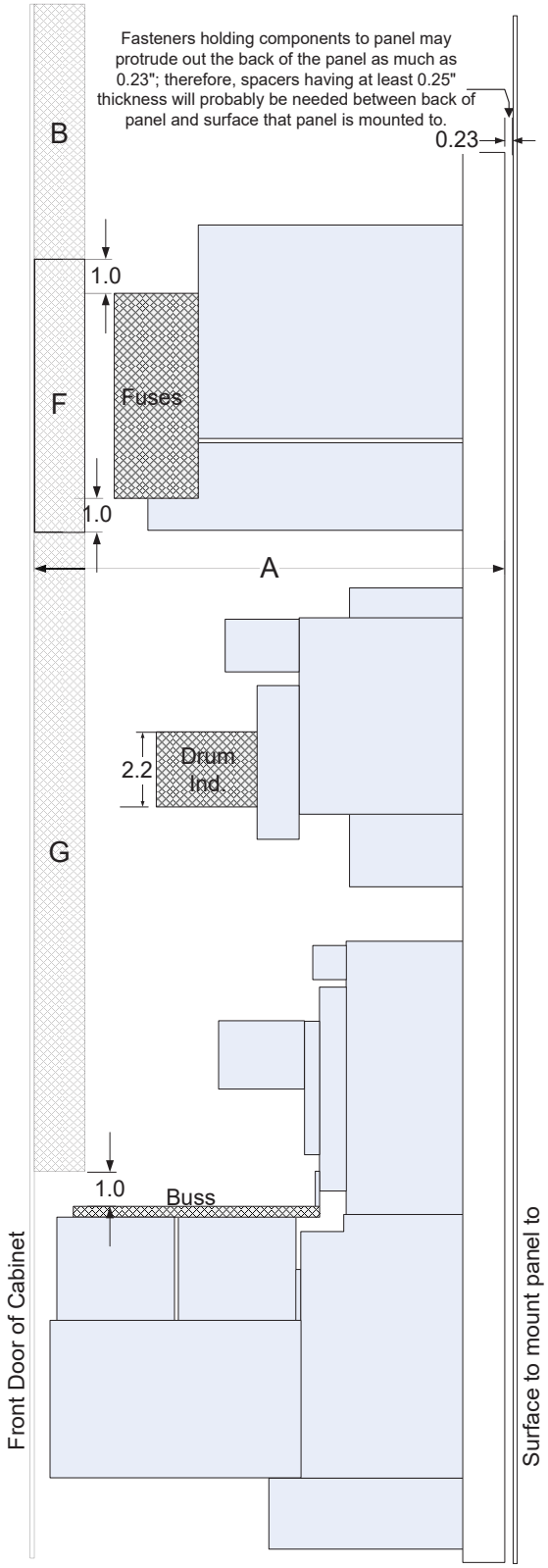

Figure 3.14: 50-200 Amp Panel to Cabinet Front Door Dimensions

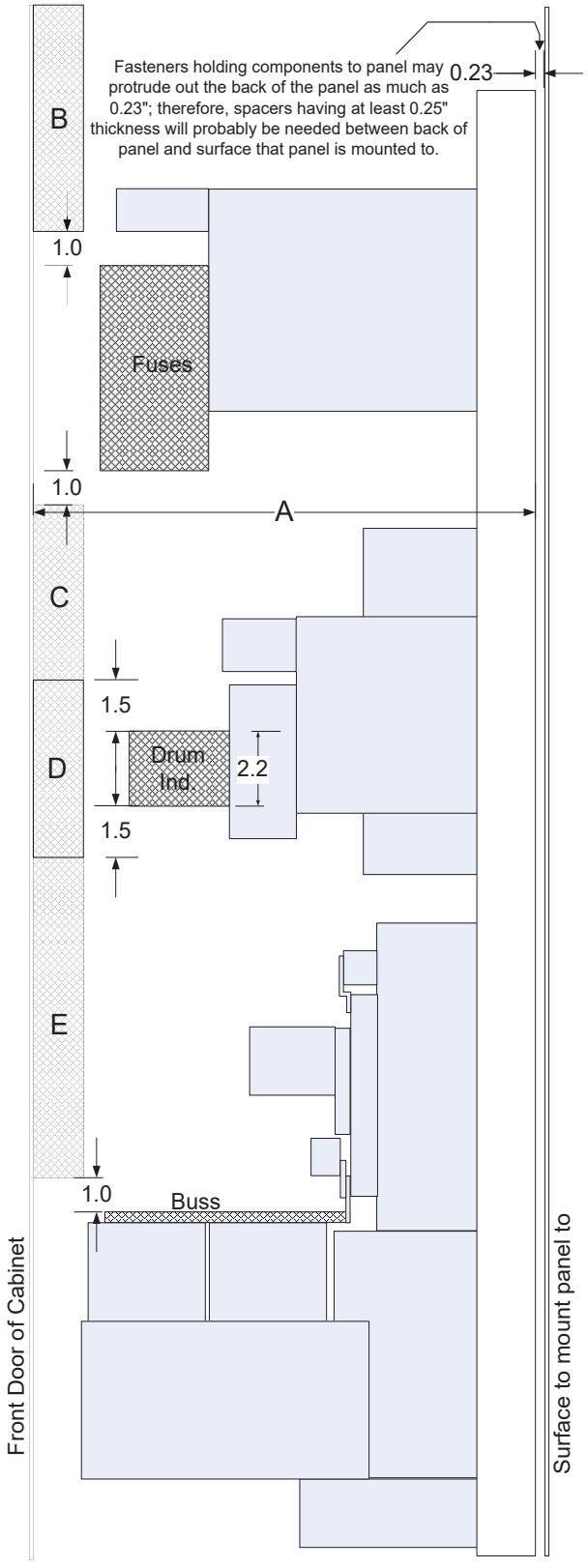

Figure 3.15: 300 Amp Panel to Cabinet Front Door Dimensions

The grey CAT-5 (or better) cable coming from the bottom connector of the HMI provides 24V DC power to the HMI and signal interface to the AHF control circuitry. Although this is the same type of cable used for Ethernet, this is NOT and Ethernet connection. Instead, it needs to be routed to connector P7 of the PC-C board (see **Error! Reference source not found.**) located in the bottom part of the AHF panel. he RJ-45 type P7 connector is marked with a grey dot to indicate that this grey cable is to be connected to it. A possible routing path for this cable down the inside of the enclosure door is shown in Figure 3.16.

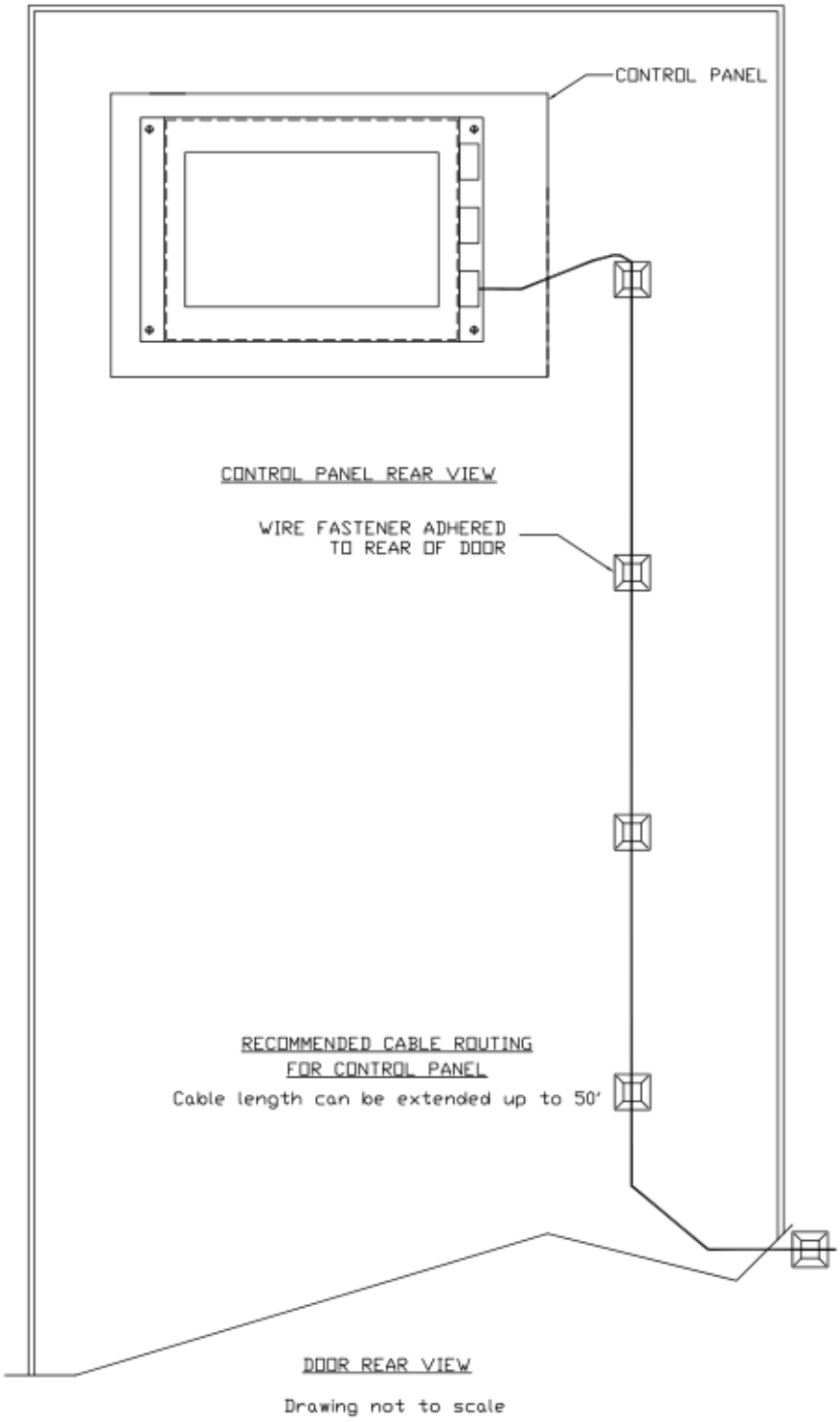

Figure 3.16: Possible Routing Path for HMI to PC-C Signal & Power Cat 5 Cable

Panels do not come with disconnect switches like the Type 1 enclosed systems. A disconnect switch will need to be added in line with the power wires to the AHF, following electrical code requirements. The output of the disconnect switch is then wired to the 3 power fuses of the AHF. Unless wiring between the fuses and the added disconnect switch or between the disconnect switch and the place where the power is tapped from are long, electrical codes will normally allow you to rely on the UL listed fuses in the AHF to over-current protect your wiring and switch; however, check your applicable electrical codes to confirm this.

Either input or exhaust fans will need to be added to the enclosure to ensure the air exchange rate shown in the specification table for your size AHF, located in Section 10, is met. If input fans are used, they should be located near the bottom of the enclosure with exhaust vents located near the top of the enclosure. If exhaust fans are used, they should be located near the top of the enclosure with intake vents located near the bottom of the enclosure. Air brought into the enclosure should be appropriately filtered so that large dirt build-up does not occur in the AHF panel that would impair the airflow through vital components. The airflow specified in the specification table should be achieved at the pressure created by the vents and filtering in the enclosure. Power for these fans will have to be derived from either the incoming power to the enclosure or some other external source, as the AHF panel does not provide a power source.

Table 3.3 provides power wiring information for all of the AHF panels. Power wiring is needed between the output of the user-provided disconnect switch to the bottom terminals of the power fuse blocks on the panel. Care should be taken so this power wiring is routed so that the integrity of components on the AHF panel are not compromised. Welding wire is recommended (but not required) because of its flexibility.

AHF Size (Amps)	Fused Current Level	Wire Range (Use 75C or equiv. Copper wire only)	Torque (in-lbs) at Power Fuse Blocks	
			Wire Connection	Fuse Bolt
50	70	#8-2/0	120	72
100	125	#4 – 350kcmil	275	132
150	200	#2 – 350kcmil	275	132
200	250	1/0 – 600kcmil	600	228
300	400	3/0 – 600kcmil	600	228

Table 3.3: AHF Panel Power Wiring Information

3.4. CONNECTING POWER WIRES AND CT WIRES TO THE AHF

There are several different possible implementations of a HPS TruWave AHF. Many are described in the sub-sections that follow. The basic interface to the AHF consists of 3 power wires, a chassis ground wire, and a set of 2 or 3 current transformers (CTs) to each AHF. The 3 power wires conduct the corrective current produced by the AHF to the loads (and line). To determine what corrective current is needed, the CTs are mounted to monitor the currents coming from the utility (or line), or the currents going to the loads that are drawing the harmonic currents. As mentioned earlier, the “line” current consists of the current to the loads plus the current to the AHF, whereas the “load” current consists of only the current to the loads.

Up to several AHFs may be paralleled to achieve higher current correction than a single system is capable of. Although more than 10 could theoretically be paralleled together, paralleling more than a few usually becomes physically difficult to realize. Instead, it is normally better to break up the loads into more manageable groups, and assign 1 or small groups of paralleled AHFs to each group of loads.

If multiple AHFs are used in parallel, the CTs MUST monitor the “load” currents. If a single AHF is used, either the “line” or the “load” currents may be monitored with the CTs. The AHF must be configured to match where the CTs are located (“line” or “load” side) via the LCD front panel.

Split core CTs purchased from HPS come with 12 feet of twisted pair wire leads. These wires may need to be lengthened to meet your needs. Total wire length that can be used depends on the following factors:

- Burden capacity of the CTs in volt-amperes (VA).
- Gauge of wire used (AWG) including the wire supplied with the CT, wire used to extend that length, wire used to daisy-chain between AHFs that are paralleled, etc.

A CT is capable of driving a particular maximum load in volt-amperes (VA), depending on the CT’s design. If the load draws more power than this value, the output of the CT will be distorted. AN AHF or multiple AHFs (if units are paralleled) monitoring the CT outputs, present a negligible load for the CTs compared to the wire leads. If the CT is producing its maximum rms output of 5 amps, the leads present a load of I^2*R to the CT, where I is 5 amps and R is the wiring resistance. Heavier wire has lower resistance, resulting in a longer wire length being able to be used. Table 3.4 can be used to determine how long the wires of a CT may be extended. In this table, VA indicates the volt-amp capability of the CT, VA_loss indicates the losses due to the leads that come with the CT at 5 amps rms current, and Wire Gage is that of the wire the CT leads are being extended with. These calculations have a constant K. If a higher CT ratio is chosen so that the CT output current is less than 5 amps when the line being monitored is carrying its maximum possible current (normally equal to the circuit breaker rating protecting the line), K is calculated to be $(i/5)^2$, where i is the current produced by the CT when the line is operating at maximum possible current. As an example, if a 1200/5 CT is used on a line protected by a 1000 amp breaker, a 1200/5 CT will produce 4.167 amps of current at 1000 amps of line current. K is calculated to be $(4.167/5)^2$ or 0.695. It is recommended that despite what the calculation yields in length that the total wire length does not exceed 100 ft. Beyond 100 ft, the inductance of the wire can cause excessive distortion to the signal, which will adversely affect performance.

Table 3.4: Maximum lengths for CT leads

Wire Gage (AWG)	Maximum Additional Wire Length (ft)
16	(VA-(VA_loss*K))*(4.4/K)
14	(VA-(VA_loss*K))*(7.1/K)
12	(VA-(VA_loss*K))*(11.2/K)
10	(VA-(VA_loss*K))*(17.8/K)

As an example, if a CT is rated for 5 VA, has 12 ft of 12 AWG leads, and has an output of 5 amps rms at the highest current that the line it is monitoring can possibly carry: VA=5, K=1, and VA_loss = 1.1 (VA loss of 12 ft of twisted pair 12 AWG wire carrying 5 amps of current). Using 12 AWG wire to extend

the leads with twisted pair wire results in (5-1.1)*11.2 = 44 ft. Using a higher CT ratio will result in a longer possible distance because K will be less than 1 in the equations in this table.

Table 3.5 shows a list of possible standard split core CTs available from HPS. Included in the table are the VA capacity of the CT, the gage of the 12 ft. of twisted pair wire leads the CTs come with, and the VA_loss of those wire leads. These VA and VA_loss values can be used with equations in Table 3.4 to calculate the length that the CT leads may be extended. If the CT chosen produces 5 amps at the maximum current the line can carry, the values listed in the wire AWG columns can be used to determine the maximum lengths that can be added.

Table 3.5: Lengths that leads on HPS supplied CTs may be extended

CT Current Ratio	VA capacity of CT	Wire AWG of CT leads	VA_loss for 12 ft. supplied length @ 5 amps	Maximum extra length of wire that can be added to 12 ft. leads using indicated wire gage @ 5 amps			
				16 AWG	14 AWG	12 AWG	10 AWG*
200/5 – 400/5	2	12	1.1	4.0	6.4	10.1	16
500/5	3	12	1.1	8.4	13.5	21	34
600/5 – 800/5	5	12	1.1	17	28	44	69
1000/5 – 1200/5	5	16	2.8	9.7	15.5	25	39
1500/5 – 1600/5	15	16	2.8	54	87	88	88
2000/5	25	16	2.8	88	88	88	88
2400/5	35	16	2.8	88	88	88	88
3000/5 – 6000/5	45	16	2.8	88	88	88	88

*If 10 AWG wire is to be used, you must transition back to 12 AWG or smaller for a short distance prior to terminating wires in the CT Interface board terminals in all AHFs, as those terminals are not large enough to reliably accept larger wire than 12 AWG.

In this table, no lengths are shown greater than 100 feet. Beyond 100 ft, wiring inductance, which distorts the signal seen by the AHF or paralleled AHFs, becomes a concern. From this table, we note the following:

- Higher current ratio CTs have higher VA capacities, so can drive higher loads (i.e. longer wire lengths). Also, using higher current ratio CTs will result in lower VA loads caused by the leads, since the CT will produce less than 5 amps at the maximum current seen. For example, if a 1200/5 CT is used instead of a 1000/5 CT on a line that can carry no more than 1000 amps, The diA tradeoff of using higher current ratios CTs will be reduced resolution of the current produced by the CT (e.g. a 2000/5 CT produces only half of the signal that a 1000/5 CT produces). However, the HPS TruWave AHF is designed with excellent current resolution. Even 50 amp AHFs have been shown to operate well with 2000/5 CTs. At all times, the “n” value in the n/5 ratio should be greater than the maximum rms current that can flow in the wires being monitored by the CTs.
- The 12’ leads supplied on 1000/5 and 1200/5 CTs are 16 AWG. If using these CTs and planning to extend these leads, you may need to consider either going to a higher CT ratio (thus increasing the VA capability of the CT), or cutting much of the supplied 12’ length off and replacing with heavier gage wire that is being used to extend the lead length.

After consulting the subsections that follow showing different possible implementations of a HPS TruWave AHF or AHFs, the following procedure should be used to connect power wires and CT wires to the AHF or AHFs:

1) It is highly recommended for safety reasons to turn off power feeding the circuit that powers the AHF and the lines to be monitored by the CTs. If split-core CTs are to be installed on live lines, the secondaries of the CTs MUST be terminated prior to installing the CTs on the live lines.

Termination should be either to the terminals inside the AHF or to a shorting block with shorting bars engaged. Shorting bars should not be removed until connections are made between the shorting block and the AHF.

2) Designate the 3 phases of your power circuit as phases A, B, and C. Phase rotation is not a concern, so the designation you make is arbitrary, and has nothing to do with physical wire or bus positions. Phase A will be the phase you decide to put CT A on, phase B will be the phase you decide to put CT B on, and phase C is the remaining phase (it will need to have CT C on it if 3 CTs are to be installed). If you are only using 2 CTs, they All CTs should be placed on either the “line” side or the “load” side, whichever positioning is required or optimal for your situation.
3) If the AHF is an enclosed unit, connect the power wiring to the switch inside the AHF via an external breaker or fused switch. In certain cases, the electrical code may allow direct wiring without going through a breaker or fused switch. If the AHF is a panel unit, connect the wiring through a switch (or breaker) to the power fuse blocks on the panel. The electrical code will usually allow the switch to rely on the fuses in the AHF for protection. Wire the power wiring from your designated phase A to the left-most terminal of the AHF’s switch or left-most fuse block, wire your designated phase B to the middle terminal or middle fuse block, and phase C to the right-most terminal of the switch or right-most fuse block. If multiple AHF units are paralleled, repeat for all units. If external over-current protection is required, each paralleled AHF will need its own external protection sized to protect the wiring to each unit.
4) Terminate the secondary leads of CT A to A+ and A- terminals, CT B to B+ and B- terminals, and CT C (If used) to C+ and C- of P1 of the CT Interface board inside the AHF enclosure. If using CTs supplied by HPS, the black lead is the “+” lead and the white lead is the “-“ lead. Use a tightening torque of 4 in. lb. Also, use the provided mounting points and wire ties to route the CT wires and provide strain relief. If you are only employing 2 CTs, the 2 CTs must be connected to the A+/A- and B+/B- terminals on this board with the C+/C- terminals not used.
5) If the AHF is a single unit with no other units in parallel with it, make sure the P2 connector with the 3 shorting jumpers is in place on the CT Interface Board. If additional units exist to be paralleled with this AHF, jumper from P2 from this AHF to P1 of the next AHF as described in the paralleled AHF example. Jumpering of P2 from one AHF to the P1 of the next AHF is continued until the last AHF to be paralleled. That last AHF must have the 3 shorting jumpers in place on its P2 connector.
6) Encircle the conductor(s) you designated as phase A of your power circuit that feed both the AHF and the loads to be corrected with the CT marked “A”. Make sure to orient the CT so that its arrow is in the direction pointing from the utility to the load. Repeat for phase B, and then for phase C, if the optional phase C CT is being used.

WARNING:
Once the circuitry that the CTs are monitoring is energized, DO NOT disconnect secondary wires of the CTs from P1 or remove P1 or P2 from the CT Interface Board from any AHFs monitoring those CTs. Power feeding the circuitry monitored by the CTs must be turned off before any P1 or P2 connections are removed. Circuitry should not be re-energized until either the CTs are removed or the secondary wires are properly terminated. (Exception: if CTs are first wired to a shorting block prior to the AHF or paralleled AHFs, and shorts are applied on the shorting block to all CTs, then the wiring to P1 or P2 of the CT Interface board(s) downstream may be disconnected without de-energizing the circuitry monitored by the CTs). CTs should never be installed on live circuitry if the secondary wires are not properly terminated. Open circuit terminals of a CT monitoring a live circuit may develop a lethal voltage across the secondary wires.

FAILURE TO FOLLOW THESE INSTRUCTIONS MAY RESULT IN SERIOUS INJURY OR DEATH.

Once all the power and signal connections have been made to the AHF or paralleled AHFs, the electrical service can be re-established to the node. The AHF should have its disconnect switch turned off when it is first installed and the power is re-established.

The following sub-sections show power wiring to a Type 1 enclosed AHF or paralleled AHFs, showing the power wires coming into the power switch of such units. Panel AHFs will include a user-supplied disconnect switch wired to the power fuses on the AHF panel.

3.4.1. SINGLE AHF MONITORING "LINE" SIDE CURRENT

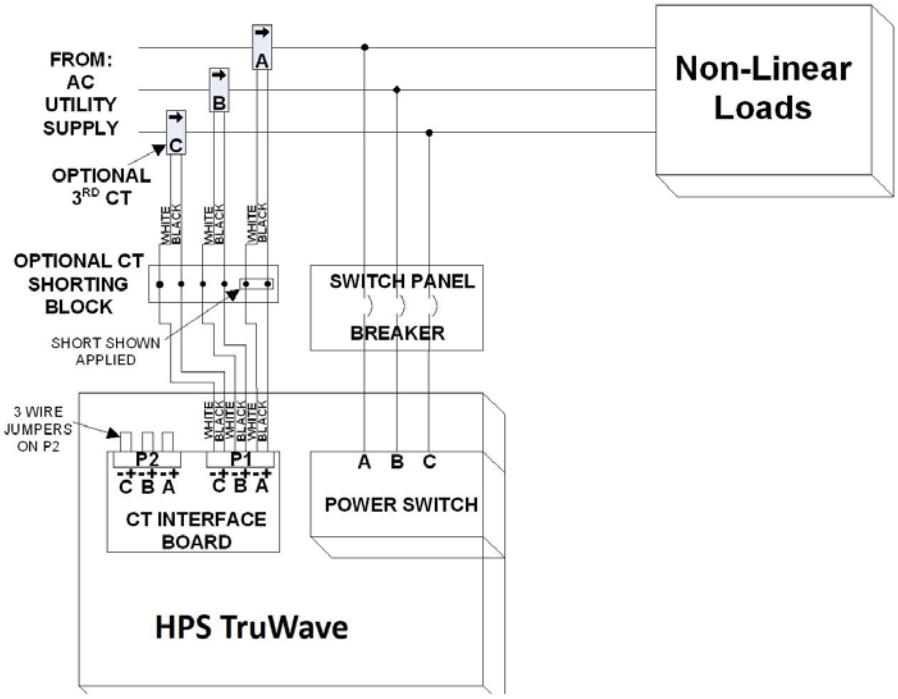

Figure 3.17: Single AHF with Line Side CTs

The most common implementation of a HPS TruWave AHF is a single system having 2 CTs, with some systems having a 3rd CT, monitoring the "line" side current as shown in Figure 3.17. A common setup consists of the input current to a distribution panel being monitored by the CTs, with breakers, feeding both the loads and the AHF, installed in the distribution panel. This example shows CTs wired to an optional shorting block; however, CTs could also be wired directly to the CT Interface board in the AHF. Since a single AHF is employed, P2 on the CT Interface board must contain jumpers as shown.

3.4.2. SINGLE AHF MONITORING "LOAD" SIDE CURRENT

Another common implementation is a single system having 2 CTs (with an optional 3rd), monitoring the "load" side current as shown in Figure 3.18. A common setup consists of the AHF and a single load (or an entire MCC section downstream) being supplied via breakers in a distribution panel. The CTs are monitoring the current in the wires going to the load (or an entire MCC section downstream). If 2 loads exist with separate feed wires, the current going to both loads must be measured. This can be done by either routing the conductors to both loads through the set of CTs as shown in Figure 3.19, or by adding a 2nd set of CTs to monitor the current going to the 2nd load as shown in Figure 3.20. If a 2nd set of CTs is used, the current ratio of those CTs must be identical to the ratio of the first set of CTs. For example, if 1000:5 CTs are used for the first set of CTs, 1000:5 CTs must also be used for the 2nd set. The arrows on both sets of CTs must point towards the load they are

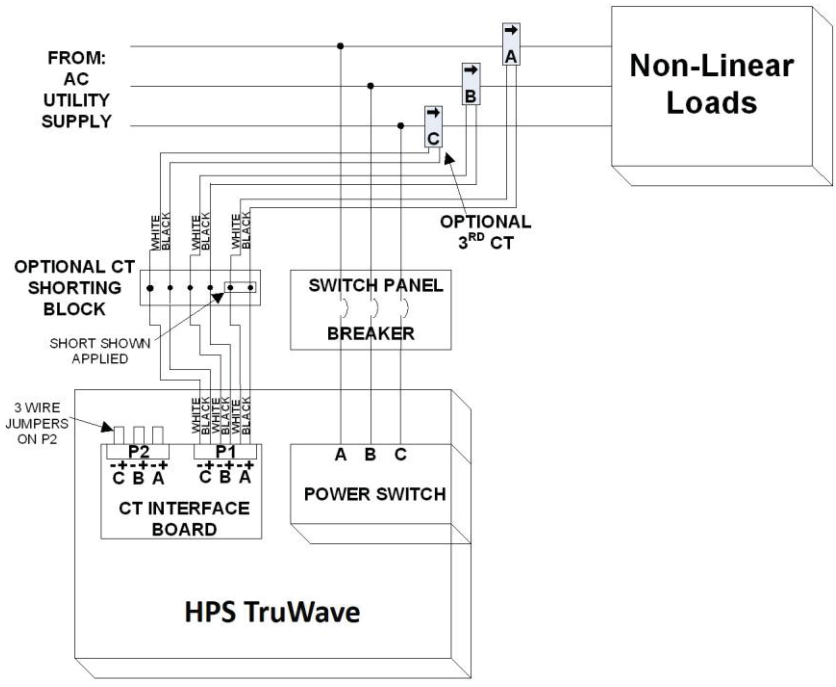

Figure 3.18: Single AHF with Load Side CTs monitoring one load

monitoring. Make sure CT “A” of the 2nd set is on the same phase as CT “A” of the 1st set; and CT”B” of the 2nd set is on the same phase as CT “B” of the 1st set. If a CT “C” is present in the 1st set, there must be a CT “C” in the 2nd set measuring the same phase. A CT shorting block is now required, as both sets of CTs must be wired together into the block as shown. The connector on the CT Interface board in the AHF will not accommodate more than one wire reliably in each terminal of the P1 block. Either concept can also be used for more than 2 loads.

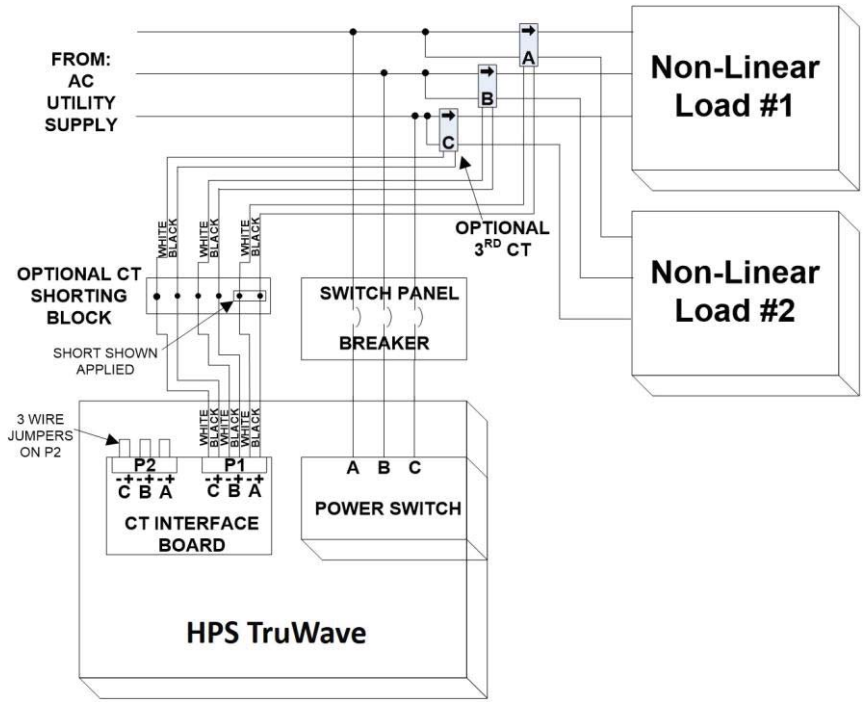

Figure 3.19: Single AHF with 1 set of Load Side CTs monitoring 2 loads

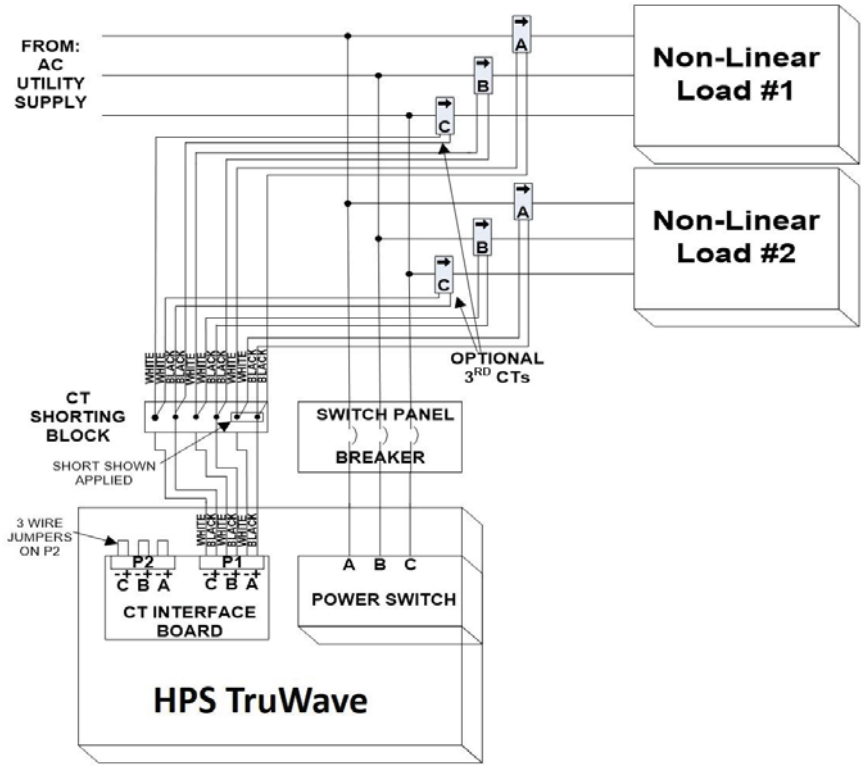

Figure 3.20: Single AHF with 2 sets of Load Side CTs monitoring 2 loads

3.4.3. PARALLELED AHFS TO CORRECT HIGHER CURRENTS

AHFs may be paralleled to increase the amount of harmonic current to be corrected. When AHFs are paralleled, the CTs must measure the “load” side current, and not the “line” side current. Figure 3.21 shows the wiring needed to parallel 2 AHFs. As can be seen, the CTs are measuring the “load” side current. The output wires of the CTs are wired to an optional CT shorting block. The shorting block is then wired to connector P1 on the CT Interface board in AHF#1 in an identical manner to when only a single AHF is used. The CT shorting block is optional; therefore the CT output wires could have been wired directly to the CT Interface board in AHF#1. The 3 jumper wires on P2 of this same board are removed. Six wires are needed to connect the 6 terminals on P2 of the AHF#1 CT Interface board with the same 6 terminals on P1 of the AHF#2 CT Interface board as shown. The A+ and A- connecting wires should be of different color (e.g. black and white as shown) and twisted together to minimize inductance and noise sensitivity. Likewise, the B+ and B- pair of wires and the C+ and C- pair of wires. Even if only 2 CTs (A and B) are used in your setup, you should wire the C+ and C- wires between AHFs in case at a later date a 3rd “C” CT is added. When done, you should have three pairs of black and white twisted wires going from P2 in AHF#1 to P1 in AHF#2. AHF#2 should have its P2 connector with the 3 jumper wires as shown.

Each AHF needs its own external breaker (if a breaker is required by code). The power wires going to each AHF are wired the same as if they were single AHFs, making sure the wire going to the left terminal inside the AHF is connected to the same phase that CT “A” is on, the wire going to the middle terminal is connected to the same phase that CT “B” is on, and the wire going to the right terminal is connected to the remaining phase. All power wires going to both AHFs must connect to the line (AC utility supply) side of where the CTs are located.

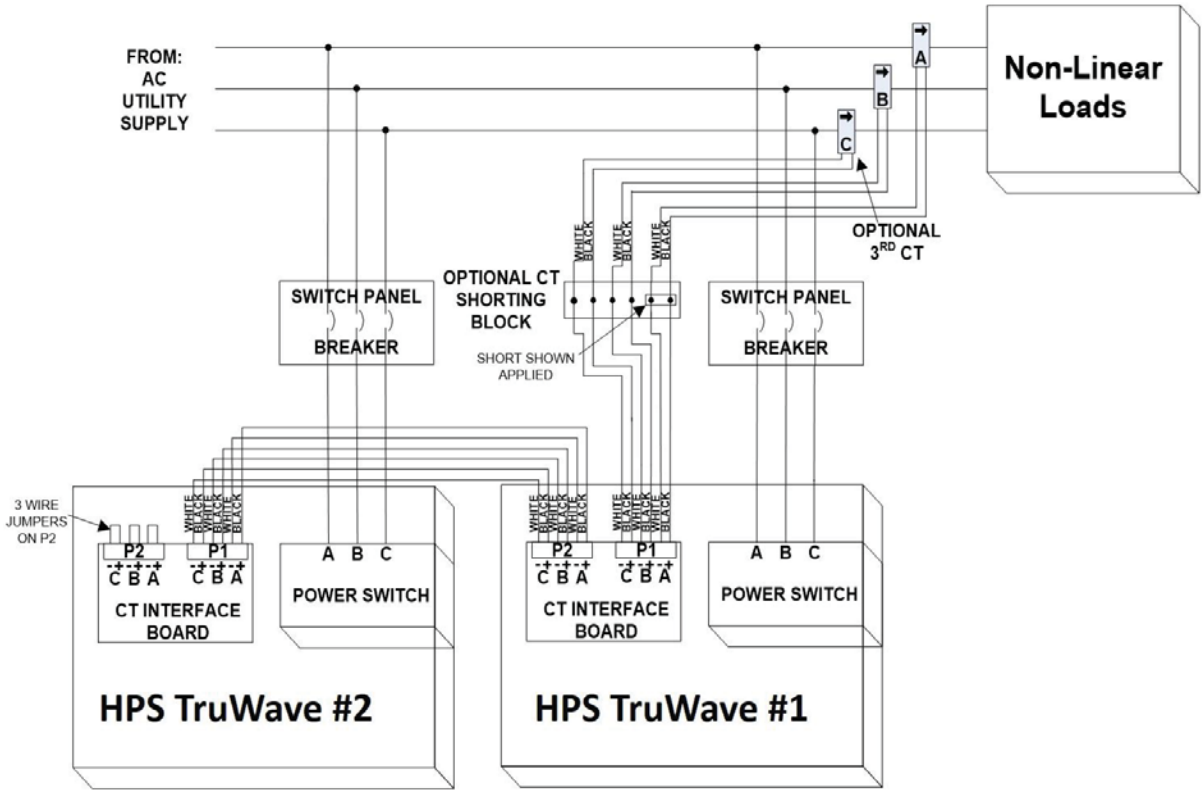

Figure 3.21: Paralleling 2 AHFs

To parallel a 3rd AHF, remove the 3 wire jumpers from P2 in AHF#2. Connect the same 6 terminals on P2 in AHF#2 to P1 in AHF#3 in the same manner that you connected P2 in AHF#1 to P1 in AHF#2. P2 in AHF#3 will now have the 3 wire jumpers shorting + to – terminals of A, B, and C. Power is connected to AHF#3 identical to how it was connected to the first two AHFs.

You could continue paralleling AHFs until the wire resistance of all of the CT runs (from CT to shorting block, from shorting block to AHF#1, from AHF#1 to AHF#2, etc.) presents too much of a load for the CTs to adequately drive. The CT Interface boards are a negligible load on the CTs compared to the wire resistance, so can be ignored. In reality room space, space for breakers in the distribution panel, etc. will probably limit the number of paralleled AHFs to some practical number.

AHFs set up to operate in parallel operate independently, and without knowledge about each other. This allows AHFs to continue operating when others in the paralleled arrangement are turned off. Since they operate without knowledge about each other, each paralleled unit must be programmed to correct the portion of the load harmonics that it is responsible for. For example, if two 300 amp systems are paralleled, each must be programmed to correct ½ of the harmonic currents in the load. Programming each AHF is done via the "%LOAD TO BE CORRECTED" parameter accessible via its front panel. See section 5.6.3 for details on setting this parameter to a value from 1 to 100%. The values put in for all of the AHFs paralleled together must sum to a value of 100. If they sum to less than 100% or more than 100% harmonics the paralleled AHFs will not correct harmonics properly.

The following equation should be used to calculate the %LOAD for each AHF that is paralleled:

$$\%LOAD = 100 * D/D\_total$$

where: D = the amp rating of that AHF and D_total = total amp rating of all AHFs paralleled.

The calculated %LOAD value is rounded off to the nearest integer. After calculating the %LOAD values for all AHFs to be paralleled, add the numbers together. If the sum is not 100%, add or subtract 1 from units (starting with the larger units) until the %LOADs sum to 100.

Example: two 300 amp and one 200 amp AHFs are to be paralleled:

1) D_total = 2*300 + 200 = 800
2) %LOAD (1st 300) = 100 * 300/800 = 37.5 which rounds to 38.
3) %LOAD (2nd 300) = 100 * 300/800 = 37.5 which rounds to 38.
4) %LOAD (200) = 100 * 200/800 = 25.
5) 38+38+25 = 101; Therefore, subtract 1 from %LOAD from 1st 300, reducing it from 38 to 37.
6) 37+38+25 = 100.
7) Program %LOAD of 37, 38, and 25 into the two 300's and one 200 amp AHFs, respectively.

It should be noted that the Line current THD displayed on the LCD displays of all paralleled units assumes that all units are programmed with the correct %LOAD value and all are fully operational. If not, actual line current THD will be higher. If all are correctly programmed and fully operational, actual current THD will be slightly better than what is displayed.

3.4.4. USING "LINE" SIDE CTS TO PRODUCE "LOAD" SIDE CURRENTS

If you really need to measure "Load" side currents such as is the case when paralleling AHFs, but that point is either inaccessible or there are many loads requiring many sets of CTs to monitor all of them, you can instead monitor both the line current and the current from the AHFs as in the paralleled system shown in Figure 3.22. A single AHF system would never need to do this, as it is capable of operating with either line or load side CTs.

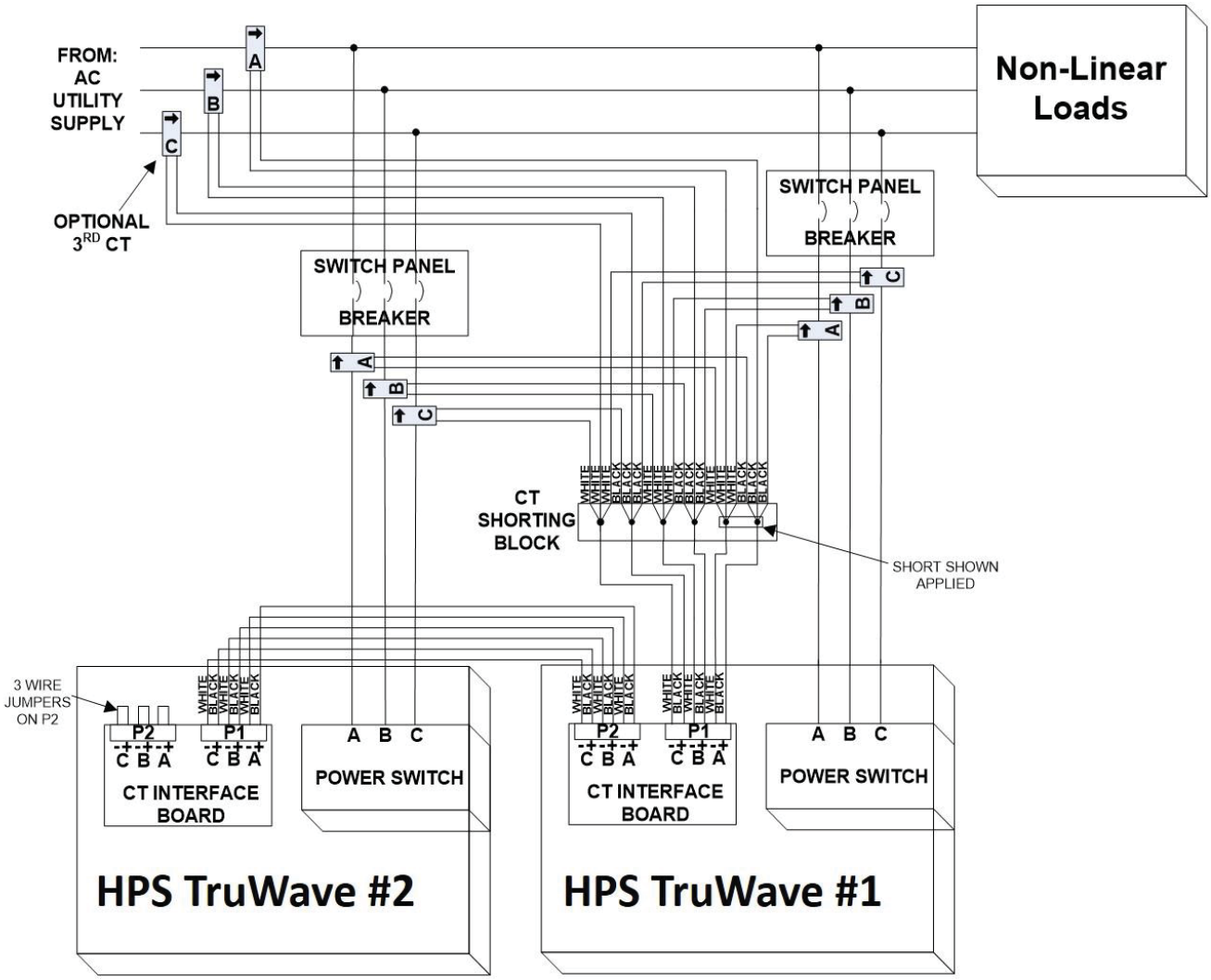

Figure 3.22 Using “Line” side CTs to produce “Load” side currents

This CT arrangement is possible because the load current is equal to the sum of the line current and the AHF currents. All of the CTs must have the same current ratio (e.g. 1000/5, etc.). The arrows on the line CTs must point towards the loads and the arrows on the AHF currents must point away from the AHFs as shown in the figure. CT “A” on the wire to each AHF must be on the wire going to the left terminal on the power switches of both AHFs and CT “A” on the line must be on the same phase coming from the utility. CT ”B” on the wire to each AHF must be on the wire going to the middle terminal on the power switches of both AHFs and CT “B” on the line must be on the same phase coming from the utility. If “C” CTs are used, they must match up similarly. A CT shorting block is required to connect the output wires from all of the “A” CTs, all of the “B” CTs, and (if used) all of the “C” CTs as shown in the figure. If you can run the same phase power wires of each AHF together at some point, you could use one set of CTs to measure all of the AHF currents, thus cutting down on the number of CTs required. This arrangement will work for more than 2 paralleled AHFs as well.

3.5. HMI (HUMAN MACHINE INTERFACE)

The HMI (Human Machine Interface) is shown below. It is housed in a dust-proof, water-resistant metal enclosure that is usually mounted on the front of the enclosure housing the AHF. It consists of a 7" 800x480 pixel resistive touch screen color display, 3 status LEDs, and additional interface features described in this section. See section 5 for detailed information on the touch screen and section 5.13 for detailed information on the 3 status LEDs.

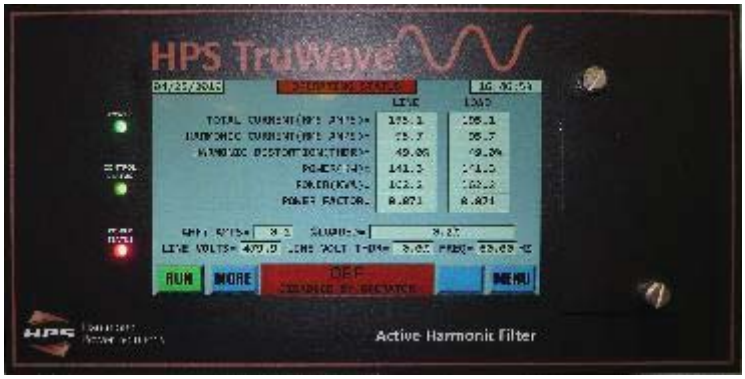

The HMI also has the following control related functions that can be externally wired to. These functions are located in the HMI enclosure. All wiring to this enclosure that is to leave the cabinet, should be routed either up or down the left side interior of the enclosure in order to keep it separated from the power wiring (refer to Figure 3.8 to see wiring path). The HMI enclosure is equipped with 3 dust-tight, water-resistant access points to these signals on the one side of the HMI enclosure. If the HMI is exposed to water or gases hazardous to electronics (e.g. hydrogen-sulfide), the dust-tight, water-resistant features of the HMI enclosure should be maintained.

3.5.1. HMI POWER & COMMUNICATIONS CONNECTION

The bottom access point has a grey Cat-5 or better cable that connects the HMI to the internal controls of the AHF. This is the only required connection to the HMI. It provides the 24-volt DC supply that powers the HMI and the communications link to the AHF controls. It connects to the RJ-45 P7 connector (color coded with a grey dot) of the PC-C AHF Control board. The standard length of this cable is 7'; however, the customer can mount the HMI remotely by either extending this cable up to 50' with a RJ-45 connector coupler or replacing the 7' cable with a different cable. It is recommended that a grey colored cable is used to keep with the color coding of cables used in the system. Although it uses the same type of cable as Ethernet, this cable is NOT and an Ethernet connection.

3.5.2. ETHERNET CONNECTION

The top access point houses an RJ-45 Ethernet connector. A Cat-5 or better cable supplied by the customer can be used to connect this point to the customer's computer network or stand-alone computer. Through this Ethernet connection, AHF operating parameters can be monitored and/or altered. See section ETHERNET COMMUNICATIONS

for details. Note: to remove a cable from this connection, a small flat blade screwdriver will be needed to push the tab of the cable connector down to release the cable from the HMI connector.

Refer to section 5.9 for details on setting up this Ethernet network connection.

3.5.3. CONTROL STATUS RELAY CONTACTS & EXTERNAL ENABLE

The HMI has three status relays whose contacts can be accessed via the P9 terminal block inside the HMI enclosure. If desired, these signals can be wired to external circuitry supplied by the end user for the purpose of monitoring status of the system.

To access the relay connector, remove the 4 screw cover from the back of the front panel. See picture below. The cover is circled in red.

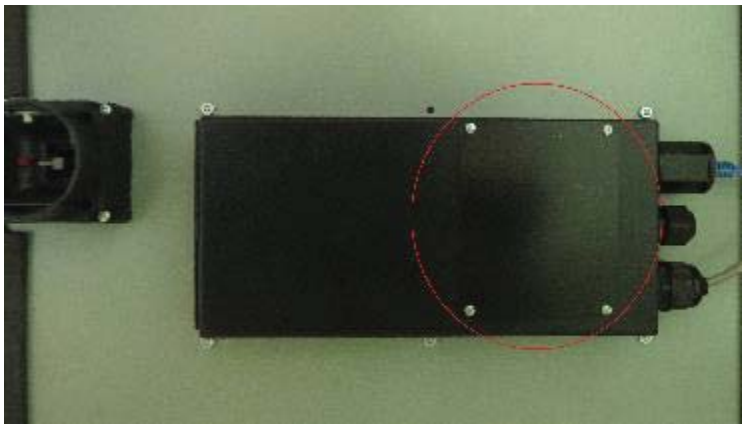

Removing the cover, exposes a green 9 pin terminal block (P9) that is used to connect to the status relays. This relay terminal block is circled in red in the following picture



- The first status relay uses pins 1 (common), 2 (normally open contact), and 3 (normally closed contact) of the connector.
- The second status relay uses pins 4 (common), 5 (normally open contact), and 6 (normally closed contact).
- The third status relay uses pins 7 (common), 8 (normally open contact), and 9 (normally closed contact).

If the unit is fully operational and correcting harmonics, the first status relay will be energized (pins 1 and 2 of the connector will be shorted, pins 1 and 3 will be open). If a diagnostic or warning condition exists, the second status relay will be energized (pins 4 and 5 of the connector will be shorted, pins 4 and 6 will be open). If the unit is operating at maximum capacity, the third status relay will be energized (pins 7 and 8 of the connector will be shorted, pins 7 and 9 will be open). The maximum rating of each contact is 0.5 amps @ 125 VAC or 1.0 amps @ 24 VDC.

The green 2 pin terminal block (P11), shown in the previous picture above the green 9 pin block are the connections to be made if the customer desires to control the ON/OFF operation of the AHF from an external dry contact. The system can be set up via the “EXTERNAL ENABLE INPUT” parameter on the “CUSTOMER PARAMETERS” display (see section 5.6.1) to enable the system via this input if the input is shorted, open, or ignored. The default from the factory is that this input is ignored (not used).

Wiring to either of these terminal blocks should enter the HMI enclosure through the middle access point. Unscrew the external black plastic cap of this access point, remove the foam insulation used to block the feed through hole, feed your wires through the hole, and tighten the plastic cap to seal the connection. Although not required, it is recommended to use one cable having multiple wires for these connections as opposed to several individual wires, especially if the dust-tight, water-resistant feature of the HMI enclosure needs to be maintained.

3.5.4. INDUSTRIAL NETWORK CONNECTION

A factory option exists to add an industrial network connection (Ethernet/IP, Modbus/TCP, etc.) to the HMI. If this option is present, the side of the HMI enclosure opposite the side with the 3 access points previously mentioned will have connectors in place of the usual side cover plate. The usual industrial network connections provided are standard RJ-45 connectors. The addition of these to the HMI enclosure will result in the HMI enclosure no longer being completely dust tight or water-resistant, so if maintaining this feature is necessary for your application, consult with the factory for alternative industrial network connections that can be used.

Normally, there will be 2 connectors associated with your industrial network add-on. In such a case either can be connected to. The presence of 2 connectors allows serial daisy-chaining the HMI with other equipment in your network if you do not have a spare Ethernet switch input to connect to.

Refer to section 7 for detailed information about using your industrial network interface.

3.5.5. BATTERY REPLACEMENT & HMI INPUT CONNECTOR

The HMI uses a CR2032 type coin-size battery to maintain its clock and some battery backed up memory functions. This battery should last more than 10 years. If it’s energy becomes depleted to the point that it needs to be replaced, it is accessible via the back cover of the HMI enclosure.

Also accessible via the back cover is the connection from the AHF controls that brings 24V power and the communications with the AHF controls to the HMI. This is the Cat-5 connection exposed when the back cover is removed. If this cable is to be replaced (e.g. by a longer cable), this connection must be removed and the cable pulled through the access point in the HMI enclosure. It is rather tricky to pull this cable through the access point, so call the factory for assistance before trying to do so.

3.5.6. USB AND ETHERNET ACCESS VIA THE HMI FRONT COVER

There is a front cover to the right of the LCD display that is attached with 2 thumb screws. Unthread the top screw, then just loosen the bottom screw so that you can swing the front cover open, exposing the components as shown in the picture to the right. The USB connector can be used to plug in a flash drive. The HMI via the LCD display can be instructed to download various stored history data to the drive (see section 5.8 for additional details).



Also in this compartment is a Cat-5 cable plugged into a RJ45 connector. This is the Ethernet connection that gets routed to the top access point of the HMI enclosure. One can remove this cable from this connector and plug another Cat-5 cable into the RJ45 connector, and go to a computer or network with the added cable to look at data or parameters over the Ethernet connection. This allows access to the Ethernet

without having to open the enclosure door of the AHF to get to the Ethernet connection at the HMI enclosure.

There is also a pushbutton switch in this compartment. Pressing and releasing this switch will manually reset the HMI in the unlikely event that the HMI stops responding.

Lastly, there is a small shunt across 2 posts. This is used for diagnostics and should always remain in place unless otherwise instructed.

4. STARTING UP THE UNIT FOR THE FIRST TIME

Starting up the HPS TruWave AHF for the first time requires a simple procedure to be followed to verify that the unit has been installed correctly. Once all the power and CT (current transformer) sensor connections have been made, as described in the previous section, and the electrical service re-established, the AHF can be turned on and tested for proper installation. For more complete testing, a load should be present in the circuit that the AHF is correcting harmonics for.

For maximum accuracy, the load used during this test should predominately be 3-phase with a high linear power factor. Moderately to heavily loaded AC motor drives are the best loads to perform this test with as they will appear as only slightly inductive. Highly capacitive or inductive loads should be eliminated or minimized. Load must result in phase shifts between currents and corresponding line-to-neutral voltages between -10 degrees (not too capacitive) and +30 degrees (not too inductive). Loads (if they represent a sizeable portion of the overall load) that should be taken off line during the testing of the CTs are as follows:

1) Motors driven directly from the line (with or without soft-starters) – May appear too inductive, especially if motor is lightly loaded.
2) Equipment with EMC filters, unless being operated at moderate load – May appear too capacitive or inductive.
3) AC Motor drives operating at very light loads.
4) DC Motor drives (or other phase control input equipment) that is not at least moderately loaded – May appear too inductive.

These test results assume that the CTs are at least on different phases. Erroneously putting more than 1 CT on the same phase is not covered.

If CTs are installed on the “Line” side, it may still possible to partially test the installation with insufficient load present using the procedure described in section 4.4; however, you should call the manufacturer for assistance before doing so. If CTs are installed on the “Load” side, you must have a load to check the system.

Throughout the following sections, displays of a 100 amp AHF are shown as examples. The displays you observe with your unit may differ somewhat.

4.1. TURNING ON THE UNIT TO CHECK FOR CORRECT CT PLACEMENT

To energize the unit, switch on the Disconnect switch to the AHF. If the power is connected correctly, the touch screen display will turn on. It is assumed that you are familiar with the Touch Screen Display. Please refer to section 5 for additional details on using the display. While the display is booting up, the following splash screen will be displayed. The system is shipped in the disabled state, so even though power is applied, the AHF will not start correcting harmonics – only the controls will be powered. To enable the system, you will be instructed later in this procedure to RUN (enable) the system. Once, running, the system can be STOPPED (disabled) in a similar manner. If the power switch on the unit is powered off, whatever state the system is in, enabled or disabled, when the system is powered off, is what the system will be in the next time power again is supplied to the unit. For this reason, it is important that if the system either does not successfully pass this test or you do not wish the system to operate yet, one should make sure the system is disabled (using the STOP function) prior to turning off the power switch.



Do not press RUN when powering on the unit for the first time. After 5 seconds the “OPERATING STATUS” display page will appear. Pressing the STOP button when the splash screen is displayed will immediately send you to the “OPERATING STATUS” display instead of waiting the 5 seconds.

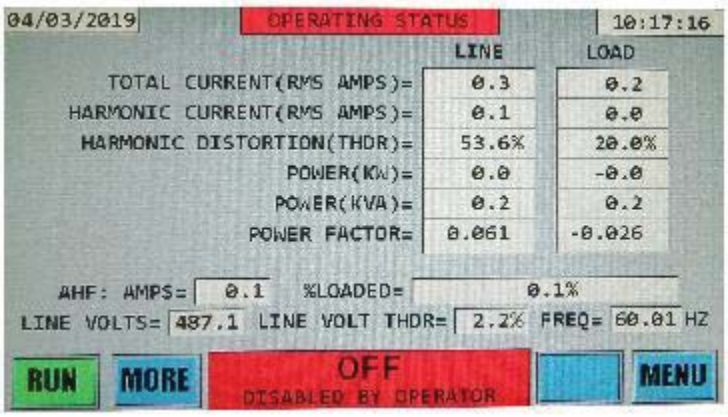

If a STOP button is shown instead of the RUN button on the bottom right of the display, press the STOP button displayed, followed by an acknowledgement of the STOP button in the display that follows to disable the AHF from operating. After pressing the STOP button in the two displays, you will be returned to the “OPERATING STATUS” display and the RUN button should now be displayed. In the middle of the display at the bottom, the message OFF – DISABLED BY OPERATOR status should be displayed. If not, go to troubleshooting portion of this manual to determine the problem based on the message displayed.

We will next want to go to the “CT SETUP” screen on the display to check for proper CT installation. First, press the “MENU” button located in the extreme bottom right of the display. The main menu page will be displayed:

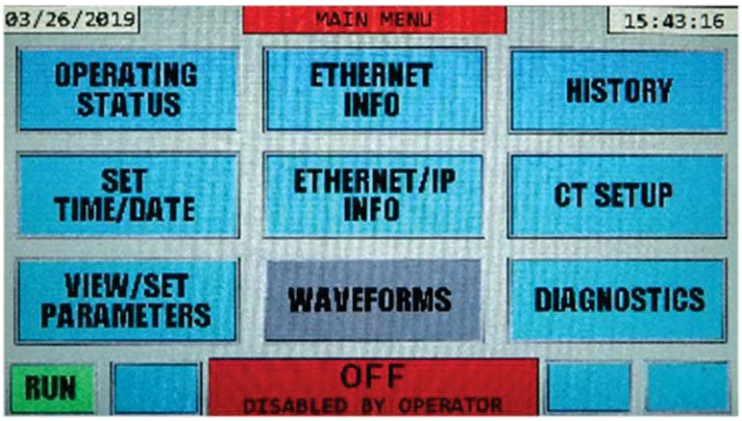

Press the “CT SETUP” button from the menu to view the “CT SETUP” display:

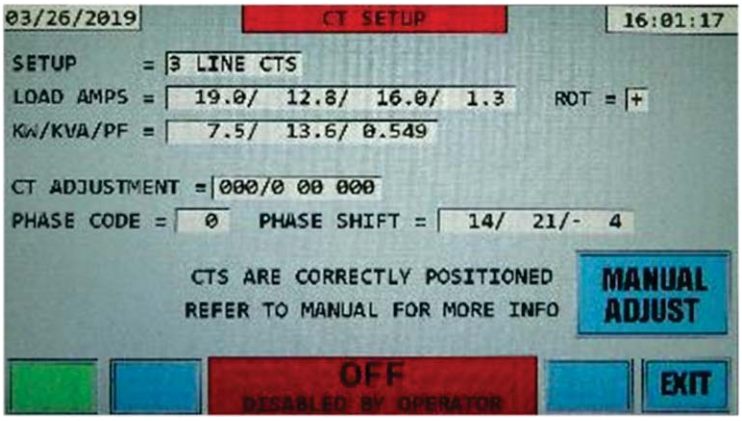

Please note that the button on the lower left is blank and should be green. The button is blank and non-functional to prevent the unit from being enabled while in the CT SETUP display. If the unit was already enabled, the button on the bottom left would be red and say STOP.

The first line of this display, displays the “CT SETUP” title along with the present date and time.

The 2nd line indicates how many CTs the system is programmed for (2 or 3), and whether the system is programmed for LINE or LOAD side CTs. Make sure this matches your particular setup. This test cannot determine if you have erroneously put one or more of the CTs on the LOAD side but have declared they are on the LINE side or if you have erroneously put one or more of the CTs on the LINE side but have declared they are on the LOAD side. Not having this correct will result in erroneous operation of the unit.

The 3rd line shows how much current is presently being drawn by the load. The first 3 numbers, separated by “/” characters are the 3 phases A, B, and C. The 4th number indicates the neutral current. The neutral current is calculated by the AHF for systems that have 3 CTs. It is not possible to calculate the neutral current for 2 CT systems, so dashes will be displayed for such systems. The 3rd line also shows the phase rotation (“ROT=” + for ABC and – for CBA phase rotation). This rotation information is for informational purposes only. The AHF automatically adjusts for either rotation.

The 4th line shows the present real power in KW and apparent power in KVA, as well as the power factor of the load. Verify that the number of CTs indicated and the position (LINE or LOAD) agrees with the number of physical CTs and location of those CTs you have wired into your system. If not, go to section **Error! Reference source not found.**.5 of this manual to correct these values. The power factor of the oad (“PF”) should ideally be a positive number between about 0.7 and .999. If it is not, it may be due to mis-positioned CTs; however, don’t worry about that at this time. This example shows that the AHF is set up for 3 CTs located on the LINE side. Also, a power factor of 0.549 is indicated with a positive phase rotation. In this particular case, the low power factor of 0.549 is due to a very high amount of harmonic current present and not due to a highly capacitive or inductive load or due to incorrectly placed CTs, so does not present a problem.

The 5th line titled “CT ADJUSTMENT” indicates any “programmed” adjustment that the AHF has been set up for to compensate for CTs that are not placed correctly. The firmware can allow for mis-positioned CTs to be compensated for without actually moving the CTs to their correct positions.

The first number in the 6th line is the “Phase code”. This value will be “0” if your CTs are installed correctly. A non-zero code between -28 and 43 indicates the CTs are not on the correct phases and/or are in the wrong direction. Any other code indicates the system is unable to determine the status of the CTs. Following the “Phase code”, are 3 values”, these 3 values are the phase shift (in degrees) between phase A, B, and C voltages and currents. When the CTs are positioned on the correct phases and in the correct direction, these values should all be between -10 and +30 degrees. If not, either a CT is in the wrong position or the load is too capacitive or inductive to evaluate the CT positions. Also, in order to determine the phase shift between the voltage and current for each phase, there must be some minimal load current present. If there is insufficient load current on any phase, dashes will be displayed for all phases that are not reading enough current. If you think you have load current, but dashes are displayed, one possibility is that you are using shorting blocks to wire your CTs to and have inadvertently left a short in place across one or more of the CTs. Also, if 3 CTs are indicated in the 2nd line and the 3rd phase shift number is the only value displaying dashes, check to make sure your system does indeed have 3 CTs. If you are using 2 CTs and you have current showing on phase A but very little on phase B, or on phase B but very little on phase A, the phase not reading much current is not correctly wired or is being shorted by a shorting block.

Depending on the value of the “Phase code” in line 6, a status message will be displayed on the 7th line of this display. Table 4.1 contains the possible status messages, their explanation, and action you need to take.

CT SETUP Message	Explanation and Action to Take
LOAD CURRENT TOO LOW	Insufficient load current to determine if CTs are placed correctly. Continue with this present section.
LOAD TOO CAPACITIVE/INDUCTIVE	Load current is high enough; however, load is either too capacitive or inductive to correctly determine if CTs are placed correctly. Continue with this present section.
CTS ARE CORRECTLY POSITIONED	**CTs are on the correct phases and in the correct direction. CTs are correctly configured, go to section 4.2.4.**
CTS ARE CORRECTLY ADJUSTED	**CTs are not on the correct phases or in the correct direction; however, a programmed “CT ADJUSTMENT” has been entered that corrects the situation. CTs are correctly configured, go to section 4.2.4.**
ERRONEOUS PHASE CODE	Should not see this message. Stop and contact factory if you do see it.
2 CTS ON A&C. MUST BE ON A&B	When using 2 CTs, they must be located on phases A and B. Go to section 4.2 to correct.
2 CTS ON B&C. MUST BE ON A&B	When using 2 CTs, they must be located on phases A and B. Go to section 4.2 to correct.
FIX CTS OR ADJUST HERE	CTs are not on the correct phases and/or are in the wrong direction. Go to section 4.2 to correct.

Table 4.1: CT SETUP Status Messages

If you observe either of the first 2 messages in this table, you can NOT proceed to the next section (4.2) of this CT test until you remedy the situation.

If you see the “LOAD CURRENT TOO LOW” message, the CTs are not sensing enough current on one or more phases to determine the phase shift between the voltage and current. The 3 numbers in the 6th line will have dashes instead of the angular phase shift in degrees for all phases that are not sensing sufficient current. If your load is very small, you will have this situation. The line titled “LOAD AMPS” will

tell you the current being sensed by the CTs. If you know that the current should be much higher than any of these values, you may have a problem with your CTs. If such is the case check for the following:

- If you have wired your CTs into shorting blocks, you may have inadvertently left one or more CTs shorted.
- If you have 3 CTs indicated on the 2nd line of this display, but only have 2 physical CTs wired into your system, you will either need to add a 3rd physical CT or change the AHF setting to 2 CTs (see section 5.6.5 for details).
- If your CTs are NOT installed to properly read the LINE or LOAD current, you will need to correct this. WARNING: if the CTs are installed around a wire with current flowing in it, but the output wires of the CTs are not properly connected, do NOT touch the CT output wires until all power is shut off to the loads and no current is flowing in the wire being measured by the CT; otherwise, deadly voltage may be present on those output wires.

If you confirm that the reason for not reading much current is due to there not being much load operating, increase the load. If the load cannot yet be increased because it is not yet operational, you will not be able to continue with this test. Instead, if your CTS are located on the “Line” side, call the manufacturer for how to perform a less comprehensive “No load” test described in section 4.4 to perform a less comprehensive “No load” test. If your CTs are positioned on the “Load” side, you will need to apply load before proceeding.

If you see the “LOAD TOO CAPACITIVE/INDUCTIVE” message displayed, your load is either too capacitive or inductive for the AHF to accurately determine if the CTs are correctly positioned. Determine the loads that are presently running. If possible, remove any that might be highly capacitive or inductive (see beginning of section 4 to identify such loads). If removing such loads is not possible, consult with the manufacturer for additional assistance. Take a picture of the CT SETUP display while it is showing this message for the purpose of emailing the picture to the manufacturer for evaluation.

4.2. CORRECTING CTS THAT ARE INCORRECTLY INSTALLED

If the status message on the CT SETUP display is either “2 CTS ON A&C. MUST BE ON A&B”, “2 CTS ON B&C, MUST BE ON A&B”, or “FIX CTS OR ADJUST HERE” message, the CTs have been installed incorrectly on the wrong phases and/or in the wrong direction. If you have a system configured for 2 CTs, use Table 4.2 to determine how your CTs are incorrectly installed. If you have a system configured for 3 CTs, use Table 4.3 to determine how your CTs are incorrectly installed. The PHASE CODE value on the 6th line of the CT SETUP display will be a number ranging from -28 to 43. This number is referred to as your “Phase Code”. This number corresponds to how your CTs are actually positioned. Go down the “Phase Code” column in the applicable table until you find the number that matches the number observed on the CT SETUP display. There are 3 columns in the table labeled A, B, and C under the title “LINE”. On the line of the table having your “Phase Code” will be letters A, B, or C (C is only present in 3 CT systems) in these columns. These letters may or may not have a “-“ minus sign after them. These letters refer to CTs “A”, “B”, and “C”. A “-“ after the letter indicates the CT is installed backwards. For the AHF to work properly, you need to have an “A” in the “LINE A” column, a “B” in the “LINE B” column, and (for 3 CT systems only) a “C” in the “LINE C” column, with no “-“ minus signs. This only occurs in the ***BOLDED, ITALISIZED*** line in the chart when the Phase Code is 0.

For all other cases, either the CTs or the lines must be changed so that the CTs and the lines match each other. There are 3 different courses of action that can be taken to achieve this correction. Each is described in the 3 subsections that follow. Read all 3 options, and select the option that is best for your situation. These 3 subsections are followed by a 4th subsection with some examples. After you have corrected your CT situation and now observe the message “CTS ARE CORRECTLY POSITIONED” or “CTS ARE CORRECTLY ADJUSTED”, proceed to section 4.3.

4.2.1. CORRECTING CT PLACEMENT BY PHYSICALLY MOVING THE CTS

The column titled “Corrective Action to move CTs to match Power Wires” in the tables indicates how to move the CTs to fix the problem. If your CTs are accessible and fairly easy to move safely to the correct position, then choose that route. If the CTs are not physically accessible or it is not practical to physically move the CTs, one of the other 2 options may make more sense.

If you have paralleled AHFs, choosing this method of correcting the CTs may only involve moving the 2 or 3 CTs. Selecting either of the remaining 2 options requires corrections done to all of the AHFs that are paralleled.

4.2.2. CORRECTING CT PLACEMENT BY MOVING THE POWER WIRES TO THE AHF

Another column titled “Or Corrective Action to move Power Wires to match CTs” indicates how to move the power wires coming into the AHF to fix the problem. When moving the power wire connections in the AHF, wires 1, 2, and 3 in the charts refer to the wires connected to the left, center, and right power switch terminals (or fuseblocks). The letters A, B, and C in the charts refer to the left, center, and right power switch terminals (or fuseblocks). Prior to any wire movements, wire 1 is connected to A, wire 2 is connected to B, and wire 3 is connected to C. The wire movement instructions in the tables will result in 2 or 3 wires being moved to different terminals.

If the power wires coming into the AHF’s power switch terminals (or fuseblocks) are easier to change than physically moving the CTs, you may want to select this option. Prior to moving the power wires, remove voltage from those wires. Note that switching the power wire connections cannot fix a CT that is installed backwards. To fix a backwards CT, the CT must be removed from the wire and reinstalled in the opposite direction, or the output wires of the CT must be reversed, or the “AUTO ADJUST” function on the CT SETUP display described in the next subsection can be used. On HPS supplied CTs, reversing the output wires of the CT means swapping the black and white wires so the white wire becomes the positive (+) wire and the black wire becomes the negative (-) wire. **WARNING: DO NOT DISCONNECT CT OUTPUT WIRES WHILE CURRENT IS FLOWING IN THE WIRE MONITORED BY THE CT. DOING SO COULD RESULT IN LETHAL VOLTAGE AT THE CT OUTPUT WIRES. LINE VOLTAGE MUST BE REMOVED FROM THE CIRCUIT MONITORED BY THE CT PRIOR TO DISCONNECTING THE CT OUTPUT WIRES.** (Exception: if the CT output wires are brought to a shorting block, a short may be applied to that block to short both CT output wires together. Then the 2 wires for that CT connecting the shorting block to the AHF’s CT Interface board may be swapped at the AHF’s CT Interface board. Once the wires are re-secured, the short must be removed from the block.)

4.2.3. CORRECTING CT PLACEMENT VIA THE CT SETUP DISPLAY

This 3rd method will normally be the easiest of the 3 methods to correct incorrectly placed CTs. If your setup uses 3 CTs, you can use this method to correct all cases. If the message “FIX CTS OR ADJUST HERE” is displayed on the 7th line of the CT SETUP display, you can fix the problem from this display screen. If your setup uses 2 CTs, you may instead observe the message “2 CTS ON A&C. MUST BE ON A&B” or “2 CTS ON B&C. MUST BE ON A&B”. When using 2 CTs, the CTs must be located on the 2 phases that connect to the left and center terminal of your power switch and/or fuseblock in the AHF. These 2 messages indicate that is not your case. You must first move the power wires as indicated using the method in section 4.2.2. If that corrects your CT problem, you are done. If that results in still having a problem (due to a CT being installed backwards), but now observe the message “FIX CTS OR ADJUST HERE”, you can finish fixing the problem using the method described in this section. See picture below for example of CTs which can be fixed with the AUTO ADJUST button.

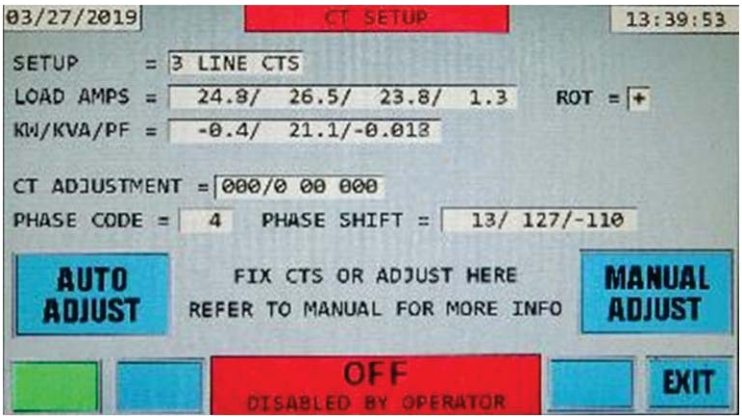

Press the AUTO ADJUST button. Within a second or two, the PHASE CODE will change to 0 and the "FIX CTS OR ADJUST HERE" message will change to "CTS ARE CORRECTLY ADJUSTED". You will also notice that the CT ADJUSTMENT value now has some 1's in it in place of the 0's. Also the AUTO ADJUST button will be replaced by a REMOVE ADJUST button. Pressing this button will remove the adjustment you made. If in the future you move your CTs or power wires to your AHF and now have the wrong adjustment, you will first have to remove the adjustment by pressing the REMOVE ADJUST button, and then if a different adjustment is needed, press the AUTO ADJUST button.

The only downfall with using this method of CT correction vs. the other methods is if for some reason you need to change the control board in your system, you will need to go through this procedure again as this information is stored in non-volatile memory on the control board.

See picture below for an example of what the display will look like after CT placement has been corrected with the AUTO ADJUST button.

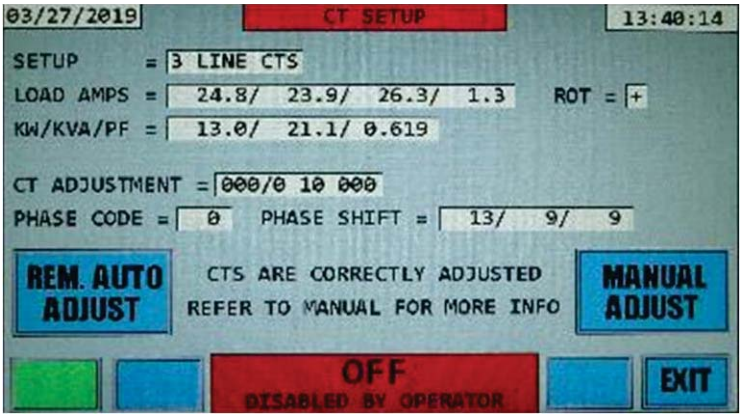

To remove a CT adjustment, press the REM.AUTO ADJUST button.

MANUAL ADJUST is a feature you may be asked to use by the factory in certain cases.

See tables 4.2 and 4.3 below for explanations of the Phase Code and the corrective action you can take.

Table 4.2: Incorrect CT Placement and Corrective Action Needed for a 2 CT System

Phase Code	LINE A	LINE B	LINE C	Corrective Action to move CTs to match Power Wires	Or Corrective Action to move Power Wires to match CTs (See Note 1)
-28	B		A	Move “B” CT to wire without a CT, then move “A” CT to wire that “B” CT was previously on.	Move wire 3 from C to A. Move wire 1 from A to B. Move wire 2 from B to C.
-24		B	A	Move “A” CT to wire without a CT.	Exchange wires 1 and 3, so 3 goes to A and 1 goes to C.
-22	B-		A	Move “B” CT (and flip direction) to wire without a CT, then move “A” CT to wire that “B” CT was previously on.	Move wire 3 from C to A. Move wire 1 from A to B. Move wire 2 from B to C.
-18		B-	A	Move “A” CT to wire without a CT, then flip direction of “B” CT.	Exchange wires 1 and 3, so 3 goes to A and 1 goes to C.
-16	B	A-		Swap wires that “A” and “B” CTs are on and flip direction of “A” CT.	Exchange wires 1 and 2, so 2 goes to A and 1 goes to B.
-14		A-	B-	Move “A” CT (and flip direction) to wire without a CT, then move “B” CT (and flip direction) to wire that “A” CT was previously on.	Move wire 2 from B to A. Move wire 3 from C to B. Move wire 1 from A to C.
-10	B-	A-		Swap wires that “A” and “B” CTs are on and flip direction of both CTs.	Exchange wires 1 and 2, so 2 goes to A and 1 goes to B.
-8		A-	B	Move “A” CT (and flip direction) to wire without a CT, then move “B” CT to wire that “A” CT was previously on.	Move wire 2 from B to A. Move wire 3 from C to B. Move wire 1 from A to C.
-2	A		B-	Move “B” CT (and flip direction) to wire without a CT.	Exchange wires 2 and 3, so 3 goes to B and 2 goes to C.
0	***A***	***B***		***CORRECT INSTALLATION***	***CORRECT INSTALLATION***
4	A		B	Move “B” CT to wire without a CT.	Exchange wires 2 and 3, so 3 goes to B and 2 goes to C.
6	A	B-		Flip direction of “B” CT.	No power wire changes
8	B		A-	Move “B” CT to wire without a CT, then move “A” CT (and flip direction) to wire that “B” CT was previously on.	Move wire 3 from C to A. Move wire 1 from A to B. Move wire 2 from B to C.
12		B	A-	Move “A” CT (and flip direction) to wire without a CT.	Exchange wires 1 and 3, so 3 goes to A and 1 goes to C.
14	B-		A-	Move “B” CT (and flip direction) to wire without a CT, then move “A” CT (and flip direction) to wire that “B” CT was previously on.	Move wire 3 from C to A. Move wire 1 from A to B. Move wire 2 from B to C.
18		B-	A-	Move “A” CT (and flip direction) to wire without a CT, then flip direction of “B” CT.	Exchange wires 1 and 3, so 3 goes to A and 1 goes to C.
20	B	A		Swap wires that “A” and “B” CTs are on.	Exchange wires 1 and 2, so 2 goes to A and 1 goes to B.
22		A	B-	Move “A” CT to wire without a CT, then move “B” CT (and flip direction) to wire that “A” CT was previously on.	Move wire 2 from B to A. Move wire 3 from C to B. Move wire 1 from A to C.
26	B-	A		Swap wires that “A” and “B” CTs are on and flip direction of “B” CT.	Exchange wires 1 and 2, so 2 goes to A and 1 goes to B.
28		A	B	Move “A” CT to wire without a CT, then move “B” CT to wire that “A” CT was previously on.	Move wire 2 from B to A. Move wire 3 from C to B. Move wire 1 from A to C.
34	A-		B-	Flip direction of “A” CT, then move “B” CT (and flip direction) to wire without a CT.	Exchange wires 2 and 3, so 3 goes to B and 2 goes to C.
36	A-	B		Flip direction of “A” CT.	No power wire changes
40	A-		B	Flip direction of “A” CT, then move “B” CT to wire without a CT.	Exchange wires 2 and 3, so 3 goes to B and 2 goes to C.
42	A-	B-		Flip direction of both “A” and “B” CTs.	No power wire changes

Note 1: If Power wires are being moved to correct the incorrect CT installation and either (or both) of the letters “A” and “B” in the LINE columns have a “-“ sign after the letter, that CT is in the wrong direction. Besides moving the power wires as indicated, the direction of that CT will have to be fixed using one of the three methods described in section 4.2.2.

Table 4.3: Incorrect CT Placement and Corrective Action for a 3 CT System (page 1 of 2)

Phase Code	LINE A	LINE B	LINE C	Corrective Action to move CTs to match Power Wires	Or Corrective Action to move Power Wires to match CTs (See Note 1)
-28	B	C	A	Move “B” CT to wire that “C” CT is on, then move “A” CT to wire that “B” CT was previously on, then move “C” CT to wire that “A” CT was previously on.	Move wire 3 from C to A. Move wire 1 from A to B. Move wire 2 from B to C.
-27	B	C-	A	Move “B” CT to wire that “C” CT is on, then move “A” CT to wire that “B” CT was previously on, then move “C” CT (and flip direction) to wire that “A” CT was previously on.	Move wire 3 from C to A. Move wire 1 from A to B. Move wire 2 from B to C.
-24	C-	B	A	Swap wires that “A” and “C” CTs are on, flipping direction of “C”.	Exchange wires 1 and 3, so 3 goes to A and 1 goes to C.
-23	C	B	A	Swap wires that “A” and “B” CTs are on.	Exchange wires 1 and 3, so 3 goes to A and 1 goes to C.
-22	B-	C	A	Move “B” CT (and flip direction) to wire without a CT, then move “A” CT to wire that “B” CT was previously on, then move “C” CT to wire that “A” CT was previously on..	Move wire 3 from C to A. Move wire 1 from A to B. Move wire 2 from B to C.
-21	B-	C-	A	Move “B” CT (and flip direction) to wire without a CT, then move “A” CT to wire that “B” CT was previously on, then move “C” CT (and flip direction) to wire that “A” CT was previously on.	Move wire 3 from C to A. Move wire 1 from A to B. Move wire 2 from B to C.
-18	C-	B-	A	Swap wires that “A” and “C” CTs are on, flipping direction of “C” CT, then flip direction of “B” CT.	Exchange wires 1 and 3, so 3 goes to A and 1 goes to C.
-17	C	B-	A	Swap wires that “A” and “C” CTs are on, then flip direction of “B” CT.	Exchange wires 1 and 3, so 3 goes to A and 1 goes to C.
-16	B	A-	C	Swap wires that “A” and “B” CTs are on, flipping direction of “A”.	Exchange wires 1 and 2, so 2 goes to A and 1 goes to B.
-15	B	A-	C-	Swap wires that “A” and “B” CTs are on, flipping direction of “A”, then flip direction of “C” CT.	Exchange wires 1 and 2, so 2 goes to A and 1 goes to B.
-14	C-	A-	B-	Move “A” CT (and flip direction) to wire that “C” CT is on, then move “B” CT (and flip direction) to wire that “A” CT was previously on, then move “C” CT (and flip direction) to wire that “B” CT was previously on.	Move wire 2 from B to A. Move wire 3 from C to B. Move wire 1 from A to C.
-13	C	A-	B-	Move “A” CT (and flip direction) to wire that “C” CT is on, then move “B” CT (and flip direction) to wire that “A” CT was previously on, then move “C” CT to wire that “B” CT was previously on.	Move wire 2 from B to A. Move wire 3 from C to B. Move wire 1 from A to C.
-10	B-	A-	C	Swap wires that “A” and “B” CTs are on and flip direction of both CTs.	Exchange wires 1 and 2, so 2 goes to A and 1 goes to B.
-9	B-	A-	C-	Swap wires that “A” and “B” CTs are on and flip direction of both CTs, then flip direction of “C” CT.	Exchange wires 1 and 2, so 2 goes to A and 1 goes to B.
-8	C-	A-	B	Move “A” CT (and flip direction) to wire that “C” CT is on, then move “B” CT to wire that “A” CT was previously on, then move “C” CT (and flip direction) to wire that “B” CT was previously on.	Move wire 2 from B to A. Move wire 3 from C to B. Move wire 1 from A to C.
-7	C	A-	B	Move “A” CT (and flip direction) to wire that “C” CT is on, then move “B” CT to wire that “A” CT was previously on, then move “C” CT to wire that “B” CT was previously on.	Move wire 2 from B to A. Move wire 3 from C to B. Move wire 1 from A to C.
-2	A	C	B-	Swap wires that “B” and “C” CTs are on, flipping direction of “B”.	Exchange wires 2 and 3, so 3 goes to B and 2 goes to C.
-1	A	C-	B-	Swap wires that “B” and “C” are on, flipping direction of both “B” and “C”.	Exchange wires 2 and 3, so 3 goes to B and 2 goes to C.
0	***A***	***B***	***C***	***CORRECT INSTALLATION***	***CORRECT INSTALLATION***
1	A	B	C-	Flip direction of “C” CT.	No power wire changes
4	A	C	B	Swap wires that “B” and “C” CTs are on.	Exchange wires 2 and 3, so 3 goes to B and 2 goes to C
5	A	C-	B	Swap wires that “B” and “C” CTs are on, flipping direction of “C”.	Exchange wires 2 and 3, so 3 goes to B and 2 goes to C
6	A	B-	C	Flip direction of “B” CT.	No power wire changes
7	A	B-	C-	Flip direction of both “B” and “C” CTs.	No power wire changes

Note 1: If Power wires are being moved to correct the incorrect CT installation and either (or both) of the letters “A” and “B” in the LINE columns have a “-“ sign after the letter, that CT is in the wrong direction. Besides moving the power wires as indicated, the direction of that CT will have to be fixed using one of the three methods described in section 4.2.2.

Possible CT Placement and Corrective Action for a 3 CT System (page 2 of 2)

Phase Code	LINE A	LINE B	LINE C	Corrective Action to move CTs to match Power Wires	Or Corrective Action to move Power Wires to match CTs (See Note 1)
8	B	C	A-	Move “B” CT to wire that “C” CT is on, then move “A” CT (and flip direction) to wire that “B” CT was previously on, then move “C” CT to wire that “A” CT was previously on.	Move wire 3 from C to A. Move wire 1 from A to B. Move wire 2 from B to C.
9	B	C-	A-	Move “B” CT to wire that “C” CT is on, then move “A” CT (and flip direction) to wire that “B” CT was previously on, then move “C” CT (and flip direction) to wire that “A” CT was previously on.	Move wire 3 from C to A. Move wire 1 from A to B. Move wire 2 from B to C.
12	C-	B	A-	Swap wires that “A” and “C” CTs are on, flipping direction of both “A” and “C” CTs.	Exchange wires 1 and 3, so 3 goes to A and 1 goes to C.
13	C	B	A-	Swap wires that “A” and “C” CTs are on, flipping direction of “A” .	Exchange wires 1 and 3, so 3 goes to A and 1 goes to C.
14	B-	C	A-	Move “B” CT (and flip direction) to wire that “C” CT is on, then move “A” CT (and flip direction) to wire that “B” CT was previously on, then move “C” CT to wire that “A” CT was previously on.	Move wire 3 from C to A. Move wire 1 from A to B. Move wire 2 from B to C.
15	B-	C-	A-	Move “B” CT (and flip direction) to wire that “C” CT is on, then move “A” CT (and flip direction) to wire that “B” CT was previously on, then move “C” CT (and flip direction) to wire that “A” CT was previously on.	Move wire 3 from C to A. Move wire 1 from A to B. Move wire 2 from B to C.
18	C-	B-	A-	Swap wires that “A” and “C” CTs are on, flipping direction of both “A” and “C” CTs, then flip direction of “B” CT.	Exchange wires 1 and 3, so 3 goes to A and 1 goes to C.
19	C	B-	A-	Swap wires that “A” and “C” CTs are on, flipping direction of “A” CT, then flip direction of “B” CT.	Exchange wires 1 and 3, so 3 goes to A and 1 goes to C.
20	B	A	C	Swap wires that “A” and “B” CTs are on.	Exchange wires 1 and 2, so 2 goes to A and 1 goes to B.
21	B	A	C-	Swap wires that “A” and “B” CTs are on, then flip direction of “C” CT.	Exchange wires 1 and 2, so 2 goes to A and 1 goes to B.
22	C-	A	B-	Move “A” CT to wire that “C” CT is on, then move “B” CT (and flip direction) to wire that “A” CT was previously on, then move “C” CT (and flip direction) to wire that “B” CT was previously on.	Move wire 2 from B to A. Move wire 3 from C to B. Move wire 1 from A to C.
23	C	A	B-	Move “A” CT to wire that “C” CT is on, then move “B” CT (and flip direction) to wire that “A” CT was previously on, then move “C” CT to wire that “B” CT was previously on.	Move wire 2 from B to A. Move wire 3 from C to B. Move wire 1 from A to C.
26	B-	A	C	Swap wires that “A” and “B” CTs are on, flipping direction of “B” .	Exchange wires 1 and 2, so 2 goes to A and 1 goes to B.
27	B-	A	C-	Swap wires that “A” and “B” CTs are on and flip direction of “B” CT, then flip direction of “C” CT.	Exchange wires 1 and 2, so 2 goes to A and 1 goes to B.
28	C-	A	B	Move “A” CT to wire that “C” CT is on, then move “B” CT to wire that “A” CT was previously on, then move “C” CT (and flip direction) to wire that “B” CT was previously on.	Move wire 2 from B to A. Move wire 3 from C to B. Move wire 1 from A to C.
29	C	A	B	Move “A” CT to wire that “C” CT is on, then move “B” CT to wire that “A” CT was previously on, then move “C” CT to wire that “B” CT was previously on.	Move wire 2 from B to A. Move wire 3 from C to B. Move wire 1 from A to C.
34	A-	C	B-	Flip direction of “A” CT, then swap wires that “B” and “C” CTs are on, flipping direction of “B”.	Exchange wires 2 and 3, so 3 goes to B and 2 goes to C.
35	A-	C-	B-	Flip direction of “A” CT, then swap wires that “B” and “C” CTs are on, flipping direction of both “B” and “C”.	Exchange wires 2 and 3, so 3 goes to B and 2 goes to C.
36	A-	B	C	Flip direction of “A” CT.	No power wire changes
37	A-	B	C-	Flip direction of both “A” and “C” CTs.	No power wire changes
40	A-	C	B	Flip direction of “A” CT, then swap wires that “B” and “C” CTs are on.	Exchange wires 2 and 3, so 3 goes to B and 2 goes to C.
41	A-	C-	B	Flip direction of “A” CT, then swap wires that “B” and “C” CTs are on, flipping direction of “C”.	Exchange wires 2 and 3, so 3 goes to B and 2 goes to C.
42	A-	B-	C	Flip direction of both “A” and “B” CTs.	No power wire changes
43	A-	B-	C-	Flip direction of all 3 CTs.	No power wire changes

Note 1: If Power wires are being moved to correct the incorrect CT installation and either (or both) of the letters “A” and “B” in the LINE columns have a “-“ sign after the letter, that CT is in the wrong direction. Besides moving the power wires as indicated, the direction of that CT will have to be fixed using one of the three methods described in section 4.2.2.

4.2.4. EXAMPLES OF CORRECTING CT PROBLEMS

Following are a few examples of CTs that are not correctly positioned that must be fixed:

Example #1:

A Phase Code of 4 is observed on the CT SETUP display for a system with 2 CTs. "2 CTS ON A&C. MUST BE ON A&B" message will also be displayed on the CT SETUP display. Since this system has 2 CTs, Table 4.2 is used to determine what the problem is and how to correct the problem. We first go down the Phase Code column until we locate the Phase Code value of 4. We then look at the 3 LINE columns A, B, and C and find that CT "A" is correctly in column A, but CT "B" is in column C instead of column B. We have 2 options to correct the situation. We could move CT "B" from where it is to the wire that does not have a CT presently on it as instructed in the "Corrective Action to move CTs to match Power Wires" column or we could remove power from the power wires coming into the AHF, then swap power wires 2 & 3 coming into the AHF's power switch (or power fuseblock) as instructed in the "Or Corrective Action to move Power Wires to match CTs" column. If the CTs are accessible, we could select to move the CT. However, if the CTs are not accessible or it is very difficult to move the CT (possibly power to the entire MCC must be shut down or there is not enough room around the other wire for the CT, we may instead opt for swapping the power wires coming into the AHF. If so, assign the numbers 1, 2, and 3, to the wires coming into the left (A), center (B), and right (C) terminals, respectively, of either the AHF's input power switch or the AHF's input power fuse block. Swapping wires 2 and 3 at either the power switch or the fuse block so that wire 2 now connects to the right (C) terminal and wire 3 now connects to the middle (B) terminal will correct the problem.

Example #2:
A Phase Code of 40 is observed on the CT SETUP display for a system with 3 CTs. "FIX CTS OR ADJUST HERE" message will also be displayed on the CT SETUP display. Since this system has 3 CTs, Table 4.3 is used to determine what the problem is and how to correct the problem. We first go down the Phase Code column until we locate the Phase Code value of 40. This table occupies 2 pages, and we find the value of 40 on the 2nd page. A-, C, and B are listed in the 3 LINE columns A, B, and C. This indicates that CT "A" is correctly installed on the correct line, but the "-" sign indicates it is installed backwards. CT "B" and CT "C" are installed on the opposite lines, but since no "-" sign exists, they are in the correct direction. If the CTs are easily accessible and can safely be removed and installed on each other's line, we could opt for this solution that is given in the "Corrective Action to move CTs to match Power Wires" column. We would also need to remove CT "A" from its line, and reinstall it in the opposite direction. However, it the CTs cannot be easily or safely moved, we could opt for the solution given in the "Or Corrective Action to move Power Wires to match CTs" column. This solution requires the same swapping of wires that was done in Example 1, after power is removed, so that wire 2 is moved to the right (C) power terminal of the power switch of fuseblock and wire 3 is moved to the middle (B) terminal. We will also have to correct for CT "A" being installed backwards by swapping the white and black wires from CT "A" at the CT Interface board in the AHF**. WARNING: DO NOT DISCONNECT CT OUTPUT WIRES WHILE CURRENT IS FLOWING IN THE WIRE MONITORED BY THE CT. DOING SO COULD RESULT IN LETHAL VOLTAGE AT THE CT OUTPUT WIRES. LINE VOLTAGE MUST BE REMOVED FROM THE CIRCUIT MONITORED BY THE CT PRIOR TO DISCONNECTING THE CT OUTPUT WIRES.** (Exception: if the CT output wires are brought to a shorting block, a short may be applied to that block to short both CT output wires together. Then the 2 wires for that CT connecting the shorting block to the AHF's CT Interface board may be swapped at the AHF's CT Interface board. Once the wires are re-secured, the short must be removed from the block.

The problem described in this example could also be corrected using the "AUTO ADJUST" feature of the CT SETUP display. Once the "AUTO ADJUST" button is displayed on the LCD display, press it to perform the adjustment. In this example, this corrective procedure is much easier to implement than either of the other two corrective options.

4.3. ENABLING AHF AFTER CTS HAVE BEEN VERIFIED

If the message “CTS ARE CORRECTLY POSITIONED” or “CTS ARE CORRECTLY ADJUSTED” is shown on the CT SETUP display, it is now time to enable the AHF to start correcting harmonics. Exit the CT SETUP display by pressing the EXIT button in the bottom right corner of the display. The OPERATING STATUS display will open.

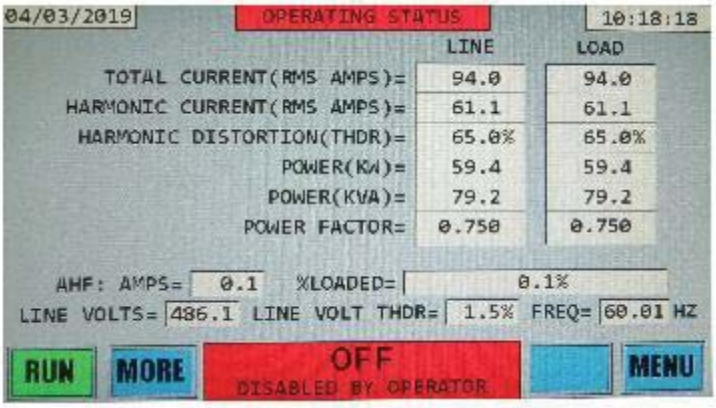

To enable the system, press the “RUN” button in the bottom left corner of the OPERATING STATUS LCD display page. This will result in the following display:

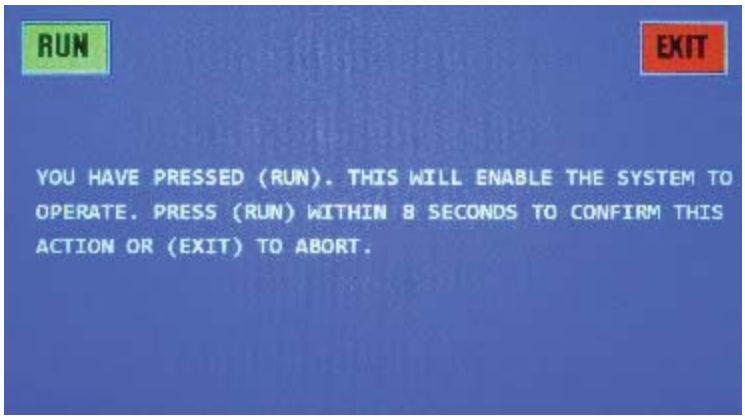

This screen allows the operator to confirm the “RUN” command, or exit without enabling the system in case the “RUN” button was pressed accidentally. The operator has 10 seconds to make a decision. Pressing the “EXIT” button will bring up the previous display page without enabling the system. If the “RUN” button is not pressed within 10 seconds, the effect will be the same as pressing the “EXIT” button. If the “RUN” button is pressed within 10 seconds, the AHF system will be enabled and begin to operate.

The AHF will begin charging the internal DC bus. This is indicated by a “PRECHARGING” message on the display. The precharging voltage and current are displayed at the bottom of the screen. This can be seen in the sample screen that follows.

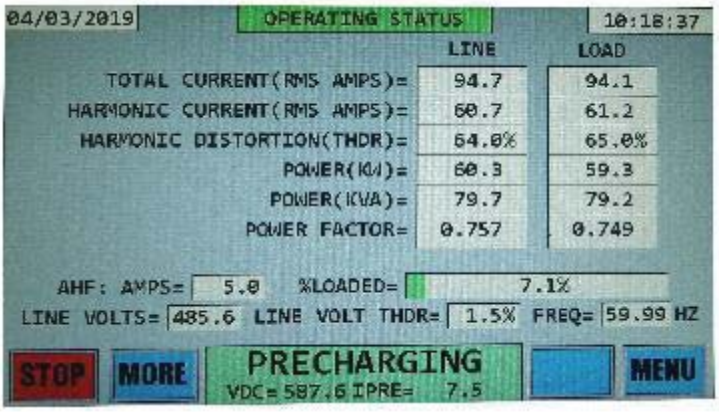

Note that once the AHF is told to RUN, the place where the RUN button was previously located, there is now a STOP button. Since the AHF is already “running”, there is no need to command it to run; however, now there may be a need to “stop” or disable the AHF from running; hence a STOP button is provided to allow that action.

When the DC voltage bus has been completely pre-charged and the control determines it is OK to proceed, the AHF begins correcting the harmonics and power factor of the line and the display will indicate that the unit is operating. This is indicated by the “ON” status as shown in the following screen:

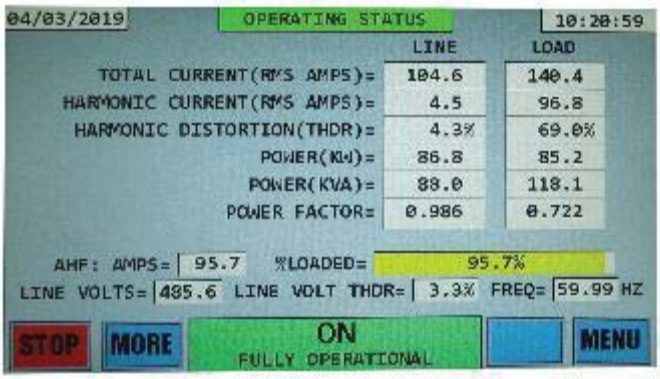

If the system is working correctly, the LOAD THDR% (total harmonic current distortion of the current fed to the loads) will still be relatively high (69.0% in this example); however, the LINE THDR% (total harmonic current distortion of the current drawn from the line) will be low (4.3% in this example). Most common loads will have about 30-40% harmonic distortion. The example in the picture above is an extreme case of a load with about 69% harmonic distortion. Even in such an extreme case, you should be able to achieve less than 5% THDR% on the LINE, and with most common loads, be able to achieve a harmonic distortion even lower than that. Also, if once the AHF starts operating, the LOAD THDR% drops (it should actually increase slightly), you may also have an installation problem. Press the STOP button, confirm the STOP operation and view the LOAD THDR%. LOAD THDR% should be slightly lower when the AHF is off compared to when it is on. If you do not observe this, keep the system off and call the manufacturer for assistance.

If substantially lower THDR% is not observed in the LINE THDR% displayed compared with the LOAD THDR% and the AHF is loaded to at least 5-10%, you probably have an installation problem. Disable the AHF by pressing the STOP button. When the next display asks you to confirm the STOP command, press the STOP button on that display as well. If the unit detects that it is not correcting harmonics satisfactorily, it may shut itself down. It will then attempt to reset (indicated by the splash screen being displayed). It could perform this cycle a few times before “giving up”. If it reaches this point, the OPERATING STATUS display will indicate a status of OFF and the reason for the problem underneath this OFF status.

Even if your CTs are placed on the correct lines and in the correct direction, if you have them placed on the LOAD side, but have told the AHF they are on the LINE side, or vice-versa, the system will not operate correctly. Recheck your CT locations. If your CTs are on the line side, make sure the AHF is set up for CTs on the line side. If your CTs are on the load side, make sure the AHF is set up for CTs on the load side. If all CTs and settings seem to be correct, consult the factory for additional assistance. On the previous simulated display, “FULLY OPERATIONAL” was displayed under the ON status. “REDUCED LINEAR PF MODE” is also an acceptable message that might be displayed.

If you run into problems enabling the system, contact the factory. The factory may instruct you to use a laptop with Ethernet connection to obtain additional information not available via the LCD display. If you have access to such equipment, please have it ready when you call for assistance.

4.4. CHECKING CTS WITH NO LOAD AVAILABLE

If you are powering up the AHF for the first time and you do not have sufficient load present to perform the CT test outlined in the previous sections, you may still at least partially verify the unit is installed correctly by following the procedure outlined in this section. However, you will need assistance with this procedure by the manufacturer.

Make sure you are displaying the OPERATING STATUS display. If not, press the MENU button on the bottom right of the display and select OPERATING STATUS from the main menu display. It will look similar to:

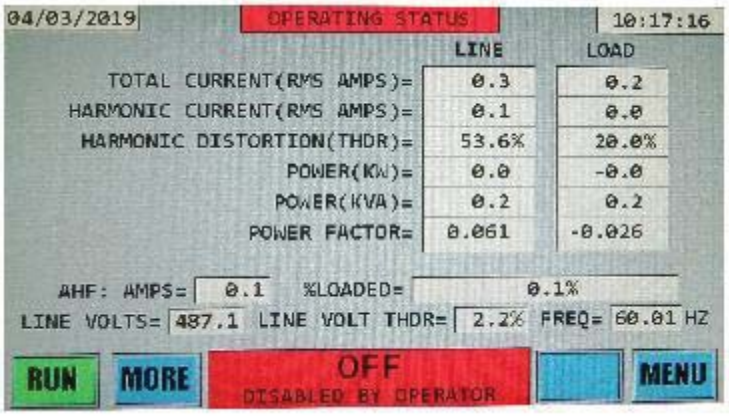

Very little current should be displayed. It should be noted that the THDR% values displayed may seem quite large; however, they are at extremely low current and, therefore, are of little importance.

Similar to what you would have done in section 4.2.4 if an adequate load was present, press the RUN button on this display. When the next “confirming” display appears, press RUN on that display as well to confirm the command. The OPERATING STATUS display will reappear; however, the OFF indication at the bottom of the OPERATING STATUS display will now display PRECHARGING and the precharging voltage and current will be displayed underneath. The RUN button will also be replaced with a STOP button. Once the AHF’s internal capacitance is fully charged, the system will start full operation and the display will look similar to the sample display that follows:

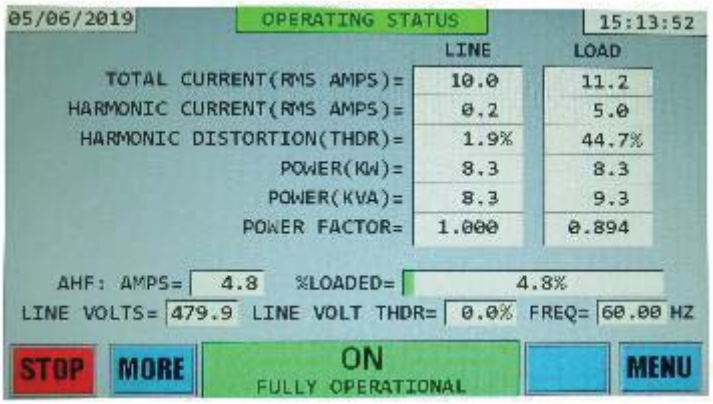

At this point, 1 of 3 possible situations will arise.

- If your CTs are correctly positioned, the load current should remain nominally around 0; however, the LINE RMS and AHF RMS currents should go to some small values. The AHF % LOADED should all remain below 5% (4.8% are shown in this example) if there truly is no load. If a small load is present, this could inch up a bit.
- If you do not observe low AHF % LOADED values, you have an installation problem.
- The system may shut down. This will be noted by the status changing to OFF along with a message underneath indicating the reason. This will be followed by a system reset, indicated by the “HPS” splash screen being displayed. It will do this about 4 times. At first, the reset will occur immediately after the system goes OFF; however, each successive time, there will be a longer delay between when the system shuts down and when it resets. After about 4 shut downs, the system will stop resetting and retrying, requiring a power cycling of the system to reset the fault. If this set of events is observed, the CTs are sufficiently out of place as to cause the system to operate erratically. It is, therefore, shutting down to prevent erroneous harmonic current correction.

If either the 2nd or 3rd situation is observed, press the STOP button on this display, followed by pressing the STOP button on the confirming display that follows to disable the AHF from operating. Check to make sure your CTs are indeed wired as instructed in section 3. If you can’t find a problem, you will need to wait until you have a load to troubleshoot the installation. Even if this test has positive results, the AHF should be disabled, turned off, and retested at a later date using the CT SETUP display when a sizable load is present.

5. FRONT PANEL TOUCH SCREEN DISPLAY

The AHF is equipped with a 7” diagonal 800x480 Full Color resistive touch screen display. Being a resistive touch screen, moderate pressure is required when pressing buttons. In addition, gloves may be worn or a stylus may be used to activate buttons on the display. If a stylus is used, make sure it does not have a sharp point that could poke a hole in the protective overlay. The display is equipped with a backlight that comes on the when unit is powered up or when the screen is touched. If the screen is not touched for 5 minutes, the backlight will go off in order to preserve the life of the light.

There are several different screens of information that can be displayed. All displays have a title line at the top that displays the date, the title of the display (“OPERATING STATUS” in this example), and the time displayed as a 24-hour clock. The date and time are internally kept by the unit by a running clock that keeps time whether the system is powered or not. The clock does not automatically adjust for time zone changes or daylight savings time, and although the clock is crystal controlled, it may gain or lose time after a while. If you desire to have the time always representative of the actual local time, you will need to periodically adjust it for these changes.



All displays also have a status area at the center bottom of the screen. This section contains the present status of the unit. In large letters will appear the operational status of the unit. Underneath this status message, appearing in a smaller font, is additional operational information (see the troubleshooting section for more information on these messages).



The colors red, light green, medium green, and yellow are also used in places on the display to help annunciate system status. Red is used to indicate a condition exists that is keeping the system from operating. Medium green indicates the system is operating. Light green indicates system is in the process of starting to operate (e.g. is precharging) or is in a normal IDLE mode due to there not being enough load to warrant full operation. Yellow indicates the system is operating, but warns that a condition exists that may result in limited performance (e.g. system is running at maximum capacity, or near temperature limits). The title block and status area will always be colored to reflect this status.

On either side of the status area at the bottom of the display are buttons that can be pressed to make changes to either the display or the system. Buttons may also appear elsewhere on the display. Buttons appear as colored (blue, green, or red) rectangles surrounded by a grey border. Within the colored rectangle is text or symbols indicating the function that pressing the button will achieve. If a box appears on the screen without a grey border, has an internal dark grey color, or is blank (contains no text or symbols), it is not a functioning button.

Examples of buttons are:



Buttons will normally appear as blue in color with the grey border with text. The 2 exceptions are the RUN and STOP buttons. These 2 buttons will cause the AHF to change operation status. The STOP button is red in color because pressing it will disable the AHF from operating. The RUN button is green in color because pressing it will allow the AHF to start operating. All other buttons do not directly affect the run operation of the AHF, so appear as a neutral blue color. A red STOP button will appear in the bottom left corner of every display if the system is presently enabled to operate. To disable the system from operating, the operator would press this red STOP button. A green RUN button will appear in this spot of every display if the system is presently disabled from operating, but is allowed to be enabled. To

enable the system to operate, the operator would press this green RUN button. See section 5.12 for additional information about the RUN and STOP button operation.

5.1. POWER-UP SPLASH DISPLAY

When the system first powers up, the following splash display is shown for up to 5 seconds:



In this case, the unit is powering up DISABLED, indicating it will not operate until the RUN button is pressed. The system will power up (DISABLED or ENABLED) in the same state that it was in when it was last powered down. When this splash screen appears, pressing the RUN button will allow the system to start operating, while pressing the STOP button will keep the system from operating. If neither the STOP nor RUN buttons are pressed within the first 5 seconds, the system will stay in the state it powered up in (in this case DISABLED). Once the STOP or RUN button is pressed, or the 5 seconds expires, the "OPERATING STATUS" display will replace the splash display.

5.2. "OPERATING STATUS" HOME DISPLAY

The default display that appears on the screen following the splash display is the "OPERATING STATUS" home display. The "OPERATING STATUS" display gives the operator a quick overview of the system status with the most important data needed to determine the AHF effectiveness at correcting harmonics and power factor. The values on this display are averages of the three phases. If more detailed information is needed, including the values for each individual phase, the MORE button at the bottom of the OPERATING STATUS display opens the OPERATING STATUS MORE display which is covered in section 5.3.

1. The informational section – This display's information consists of the average values of phases A, B, C of the Line and Load: Current in RMS Amps, Harmonic Current in RMS Amps, Harmonic Distortion (THDR or THDF) in percent, Real Power in KW, Apparent Power in KVA, and the Power Factor. In addition it shows the AHF Current in RMS Amps, the Line Voltage in Volts, the Line Voltage Harmonic Distortion (THDR or THDF), and the Frequency in Hz.
2. The "Status" section – Located at the bottom of the screen. The middle section contains the present status of the unit. In large letters will appear the operational status of the unit. Underneath this status, appearing in a smaller font, is additional operational information (see the troubleshooting section for more information on these messages. The color of this middle section will change to reflect the system status. Possible common operational status indications and associated colors are listed:
    - OFF **(RED)** – System is not running. The line below will indicate why. In the example screen that follows, the system is OFF because it is presently "DISABLED BY OPERATOR", indicating that you need to press the RUN button if you desire to have the system run.

- PRECHARGING **(LIGHT GREEN)** – This will be displayed for up to several seconds when transitioning from OFF to ON. The AHF contains a large bank of capacitance that must be "pre-charged" prior to starting operation. While in this interim state, the line underneath will contain the voltage across this capacitance and the charging current. While "PRECHARGING", the voltage can be observed to be increasing steadily until it reaches its goal of a bit over 800 volts. The charging current will remain in a range from a couple of amps to a bit less than 10 amps.
- ON **(DARK GREEN)** – System is running. Normal lines underneath this indication are "FULLY OPERATIONAL" or "REDUCED LINEAR PF MODE". Other information displayed might indicate attention is needed. See the troubleshooting section for more information.
- ON: MAX LOAD **(YELLOW)** – System is running, but is at maximum output. The load is requiring more harmonic and/or linear current correction than the unit is rated for. The system will self-limit itself to provide its maximum capability, with the remainder having to come from the utility. The system is designed to operate continuously under these conditions, so this condition is not usually a concern. There are a couple of instances where this may be a concern. First, if there is an installation or some other problem, the AHF could possibly run at max load and not performing properly. If the line harmonic currents are not substantially lower than the load harmonic currents, there could be a problem that should be investigated. Another time it could be a concern is if the unit is so undersized for the load it is meant to correct that the remaining amount of harmonic and/or linear current correction that still needs to come from the utility is above that which can be tolerated. In such a case the only recourse is to either replace the AHF with a larger AHF or add a 2nd AHF in parallel with the 1st unit.
- IDLE **(LIGHT GREEN)** – System is idling. If the "UNIT DISABLED IF LOAD POWER BELOW THIS %" setting in the "Set Parameters" is set to a value other than zero, and the load power is below this set value, the AHF will go to an "idle" state and display this status. While in this state, the AHF will keep its internal DC link capacitors charged. When the load power increases, the AHF can quickly start operating again. Normally, the message "LOAD TOO LOW" will appear under the IDLE status indicator.

- "IDLE" **(LIGHT GREEN)** - this is displayed if the "UNIT DISABLED IF LOAD POWER BELOW THIS %" parameter is set to something other than zero and the load power is below the set value. No additional message below will be displayed.

  To the left of the Status information will appear a "RUN" button if the system is currently disabled, thus giving the operator the opportunity to enable the system; or a "STOP" button if the system is currently enabled, thus giving the operator the opportunity to disable the system.

  To the right of the Status information is a "MENU" button. Pressing the "MENU" button will display the main menu, where the operator can select a different display.

An example of an "OPERATING STATUS" home display for a 100 amp AHF that is running follows:

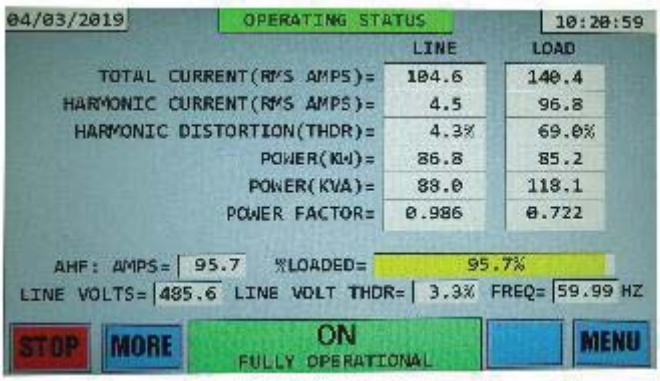

There are 2 columns in the “informational section”, one for the LINE information and one for the LOAD information. All values on this screen except for frequency and power are averages of the three phases.

The line current is the current measured coming from the utility. When the AHF is operating, this current represents the corrected current. Since the AHF supplies the harmonic currents to the load when the AHF is operating, these harmonic currents no longer come from the line (utility), so the harmonic content of these line currents will be greatly reduced. When the AHF is not operating, these “line currents” will essentially be equal to the “load currents”.

The first row in the first column displays the rms current of the average of all 3 phases. The 2nd row in the first column displays the rms harmonic current of the average of the 3 phases. The 3rd row in the first column displays the “total harmonic distortion” in the average of the 3 phases. Either THDR (equal to HARM. RMS/LINE RMS) or THDF (equal to HARM. RMS/Fundamental RMS) will be displayed depending on the THDR/THDF setting in the “Set Parameters” function.

The load current is the current measured going to the loads (motor drives, etc.). The load will draw harmonic currents whether the AHF is on or off, so the “load currents” will have harmonics present when the load is operating. Like the “line current” column, the “load current” column contains a row for rms of the current going to the load, a row for the rms of the harmonic current going to the load, and a row for the THDR or THDF total harmonic distortion of the current going to the load.

The next 3 rows are related to the line and load power, KW (kilowatts of power), KVA (kilo-volt-amps), and PF (power factor). PF is simply the ratio of KW divided by KVA. The ideal optimum power factor is 1.0. Such an ideal power factor would result if there are no harmonic currents or voltages, there are no reactive (out-of-phase) fundamental currents, and all of the phase rms currents and voltages were identical. Normally, with the AHF operating, one would see here that the KVA of the load is higher than that of the line. Since the voltages of the line and load are identical, the difference is due to the load having a higher rms current due to the existence of much higher harmonic currents going to the load than what is coming from the line, and due to some higher out-of-phase current drawn by the load than is drawn from the line. Since the AHF is supplying these undesirable “extra” currents that the load draws, they do not need to come from the line, so total line current is lower than that of the load. Reducing the current coming from the line by eliminating these undesirable “extra” currents also results in a vastly improved power factor from the line.

Although the line KVA is lower than the load KVA, you will notice that the Line KW is a little higher than the Load KW. The difference of 1.6 KW shown between the Line and Load power represents the losses of the AHF in providing the harmonic currents and reactive current drawn by the load. This 100 amp AHF was very heavily loaded to more than 95%. As the load on the AHF goes up, the losses will also increase.

The next 2 columns contain “AHF current” information. The first of these columns displays the rms of the average of the 3 phases of current supplied by the AHF. This is the current supplied by the AHF (both harmonics and out-of-phase linear current) to cancel those drawn by the load, so that the current does not have to come from the line (or utility).

The “% LOADED” bar indicates the percent loading on the AHF. A fully loaded AHF would have values around 100% in this line. Since this example is for a 100 amp AHF, the “% LOADED” values are identical to the “AHF RMS” values (note: 100 amps = 100% loaded). For an AHF rated for 300 amps, the “% LOADED” values would be 1/3 of the “AHF RMS” values, since 300 amps = 100% loaded for a 300 amp AHF. The color of the % LOADED bar changes depending on the percent loading value. If the percent loading is less than 96% the bar is green, if greater than 96% loaded, the bar is yellow. This indicates that the unit is heavily loaded, and gives a warning to the operator.

Note that there is some added “hysteresis” in the color of the % LOADED bar. If the unit becomes 96% loaded or higher, and then becomes less than 96% loaded, the bar color will not change back to green until the unit is 93% loaded or less. This prevents the bar from rapidly flashing between green and yellow if the % loaded value rapidly changes between 95% and 96% for example.

One will notice in this example display that the “LOAD” currents contain sizable harmonic currents, and that the “LINE” currents contain greatly reduced harmonic currents. This 100 amp AHF is supplying about 96% of its capability in providing this correction. For most situations, you should observe the line THDR being less than 5% (in many cases much less) when the AHF is 15% loaded or higher. Some exceptions would be if the line voltages are highly distorted, the TDHR of the load is higher than normal, or if there is high impedance upstream (on the line side). The higher the AHF is loaded, the lower the resulting line THDR will be, up until the point that the AHF is 100% loaded.

The last 2 columns contain voltage and frequency information. The “LINE VOLTS” column contains the line-to-line voltages of the average of all 3 phases. Both the line side and load side are at the exact same voltage, so, unlike with the currents, there is not a need to list the line and load side separately. The 2nd column displays the “total harmonic distortion” in the average of the 3 voltage phases. Either THDR (equal to HARM. RMS/LINE RMS) or THDF (equal to HARM. RMS/Fundamental RMS) will be displayed depending on the THDR/THDF setting in the “Set Parameters” function. The 3rd column is the line frequency in Hz.

5.3. “OPERATING STATUS” MORE DISPLAY

Pressing the “MORE” button on the “Operating Status” display, opens the “Operating Status” “More” display. The “MORE” button will change to a “LESS” button to allow the operator to go back to the “Operating Status” “Less” display. See the following picture for an example of the “Operating Status” “More” display.

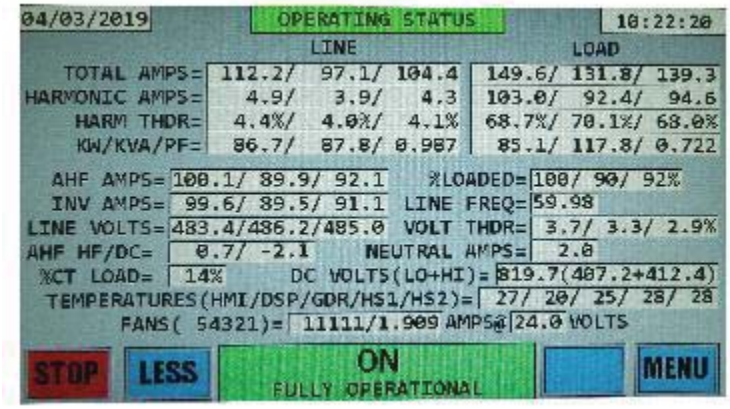

The “Operating Status” “More” display shows some of the same information as in the “Operating Status” “Less” display but for all 3 phases individually instead of the average of the phases. This gives more detail to better understand the status of the system. The first 5 rows provide the same information as the “Operating Status” “Less” display but for all 3 phases. The following explains the next 6 rows of status data, much of which is not available on the “Less” display.

INV AMPS are the inverter currents that are very similar to the AHF AMPS currents except they include the switching currents. These are currents related to the inverter switching frequency that are internally filtered so do not appear in the AHF AMPS. At higher AHF current levels, switching currents make up a small percentage of the overall current, so INV AMPS and AHF AMPS will be about the same. At lower AHF current levels, the switching currents make up a much higher percentage of the overall current, so INV AMPS currents will be several amps higher than the AHF AMPS.

AHF HF/DC shows the amount of high frequency and DC current produced by the AHF. The value prior to the “/” is an average of the 3 phases of the amount of switching current in the AHF AMPS. This should be less than 1% of the AHF current rating as the switching currents should be internally filtered. The value following the “/” shows the average amount of DC current in the 3 phases produced by the AHF. This value will average over time to be zero, but will vary between low positive and negative numbers.

The NEUTRAL AMPS current will only display a reading if 3 external CTs are being used in cases where a neutral current is possible. In such a case, the neutral current will be displayed here in amps rms. 0.0 amps, as shown in this example, indicate only 2 CTs are used; therefore, neutral current cannot be calculated.

%CT LOAD represents the percentage that the highest externally located line or load CT is loaded to. In this case, the line CTs are scaled to 2000/5, so that 2000 amps produces 5 amps in the output of the CT. These CTs are capable of monitoring up to 2000 amps rms of current. The highest line current in this case is presently 119.1 amps in phase C. 119.1 amps is 6% of the 2000 amp capability of the CTs; therefore, the CTs are loaded to 6% of their capability. This value should not reach more than about 80%, otherwise, some distortion could occur in some instances. If this reaches 80%, a higher ratio CT may need to be considered.

DC VOLTS (LO+HI). This is the voltage across the inverter DC link bank of capacitors. The nominal DC link voltage for this 3-phase, 480 VAC AHF is 820 volts. The capacitance consists of 2 banks of capacitors with the two banks wired in series. There is a lower and upper bank, signified by the LO and HI labels. The total DC voltage of 820 volts will nominally be split equally between the 2 banks.

TEMPERATURES are internal temperatures in degrees Centigrade. The first value is the temperature internal to the HMI enclosure. The second value (20 in the example) is a temperature on the DSP control board. For units shipped by HPS as Type 1 systems, this temperature should be fairly close to the room temperature, as it should reflect the air temperature coming into the enclosure. For units shipped as panels and installed into cabinets by a 3rd party, the value of this temperature could be a bit higher, depending on the airflow amount and arrangement in the cabinet. The 3rd value is the temperature of the gate drive board. The 4th and 5th temperatures are that of the heatsink that contains the system's inverter. The 4th temperature is monitoring the left side of the heatsink, while the 5th temperature is monitoring the right side of the heatsink. These temperatures are normally around 15-25 degrees higher than the room temperature when the AHF is at full load. At the 98% load this example AHF is operating at, the heatsink temperatures are about 15 C higher than the ambient. If all fans are not operational or input filters are dirty, higher temperatures will result. At some point, a high temperature warning will occur (indication under the ON status in place of the FULLY OPERATIONAL) and accompanied by the title and status areas displayed in yellow. If temperatures continue to climb, the unit will shut down.

"FANS" is an indication of the operation of the internal 24 Volt DC powered cooling fans. Fans are turned on or off as needed. There are 5 possible outputs for fans (1 through 5). The numbers inside the square prior to the "/" indicates fan outputs that are presently commanded on in the system. The 50 and 100 amp AHFs have 3 fans, so only the outputs associated with the numbers 3, 2, and 1 drive fans (outputs 4 & 5 can be ignored), as in this 100 Amp AHF example. The 150 and 200 amp AHFs have 3 or 4 fans, so if 3 fans, outputs 4 & 5 are ignored and if 4 fans, output 5 is ignored. The 300 amp AHF has 4 or 6 fans, so output 5 is ignored if 4 fans and all outputs are used if 6 fans (fans 5 and 6 are driven together by output 5, so count as one fan). Units shipped as Type 1 systems by HPS, have the higher number of fans previously listed. Units shipped as panels by HPS will only have the lower number of fans indicated. The integrator will use additional fans powered by external means that are not monitored by the AHF. The numbers in the square will consist of 1's or 0's. Each 1 or 0 corresponds to the fan number, and indicates if that fan is being commanded on (1) or off (0). In the example display, there are five 1's indicating all 5 fan outputs are being commanded on. Since there are only 3 fans in this system the 1's corresponding to fan outputs 4 and 5 are ignored. All 3 fans corresponding to outputs 3, 2, and 1 have a "1" displayed, indicating all 3 of those fans are being commanded on. The value after the "/" indicates the current drawn by the fans. If this value drops from its value when the system is new, it indicates that one or more fans may not be operating correctly. A Fan test described in the Troubleshooting section of this manual can be performed to see which fan(s) is not drawing the correct current. The voltage after "AMPS@" is the voltage of the 24V DC power supply primary supply powering all of the controls and the fans.

5.4. “MENU” DISPLAY

Pressing the “MENU” button on a display will bring up the MENU display, which allows you to change to a different display.

This display offers 9 choices for screens to be displayed. They are blue rectangles with grey borders, indicating that they are buttons that can be pressed. To select the desired screen, press within the blue rectangle.

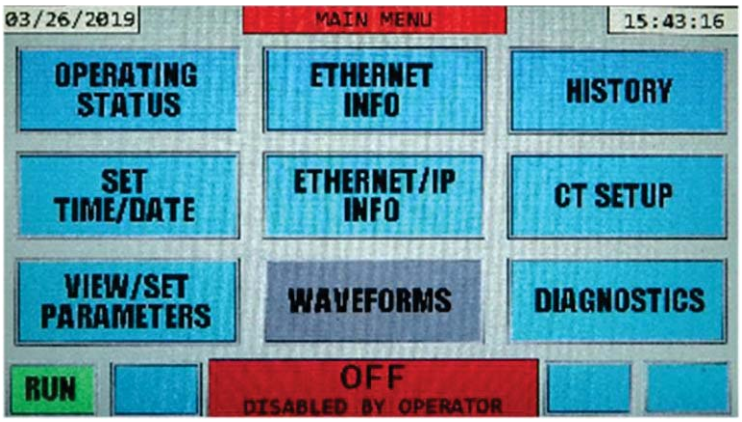

The Waveforms button is dark grey to indicate that this feature is not yet functional. This is true for any grey button. Note: your system may not have Ethernet/IP or Modbus TCP capability. In that case the button which says ETHERNET/IP INFO in the picture above will say INDUSTRIAL NETWORK and be grey and inactive. See section 7 for information about the industrial network option for the AHF.

5.5 “SET TIME/DATE” DISPLAY

This display allows you to set the time and/or date of the internal clock kept by the HMI module. As noted earlier, the HMI does not account for time zone or daylight savings changes. Also, over periods of time, the time may drift a bit from the actual time.

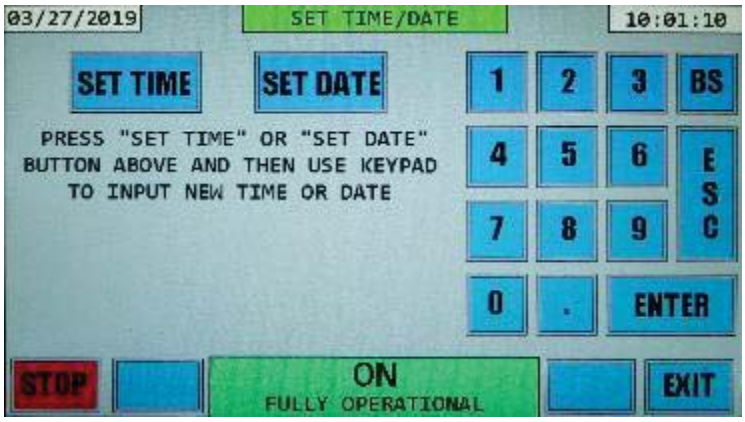

This display has the 2 buttons “SET TIME” and “SET DATE”, along with a keypad. Press the “SET” function desired, and use the keypad to enter the correct time or date. When done changing the time and/or date, press the EXIT button to exit back to the main menu.

For example, if SET TIME is pressed the display will change to the following display. The SET TIME button changes to a white color to indicate that is the selection made. If you meant to set the date instead, you could press the blue SET DATE button to change to that display without making changes to the time.

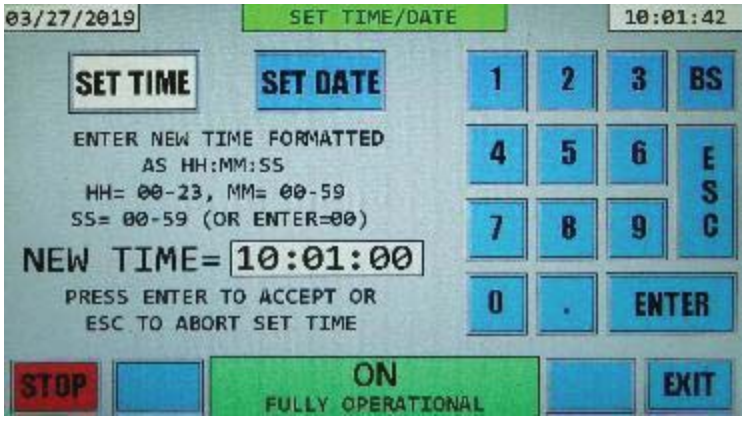

To the right is a keypad for you to use to enter in a time. To change the time, use the keypad to enter 2 digits for the hours in military time format (hours 00-11 = AM, 12-23 = PM). After these 2 digits are entered a ":" will be displayed. After the ":" enter the minutes (00-59). After the minutes are entered, a 2nd ":" will be displayed. Now you can either enter the seconds (00-59) or press the ENTER key on the keypad, to select 00 seconds. It is important to note that leading zeros must be typed, as all entries require 2 digits to be entered. The backspace "BS" button can be used to erase the last key entered.

Pressing ENTER once a legitimate time is entered ends the SET TIME session, changes the time to the value entered, and reverts back to the original SET TIME/DATE display.

Pressing the EXIT button prior to pressing the ENTER button exits the "SET TIME/DATE" display and reverts back to the main menu display, without making any changes to the time.

Pressing the SET DATE button, results in a similar "set time" display.

Again, use the keypad to enter in a date. To change the date, use the keypad to enter 2 digits for the month (01-12). After these 2 digits are entered a "/" will be displayed. After the "/" enter the day of the month (01-31). After the day is entered, a 2nd "/" will be displayed. Now enter the year (00-99). It is important to note that leading zeros must be typed, as all entries require 2 digits to be entered. The backspace "BS" button can be used to erase the last key entered. Pressing the ENTER key once a legitimate date is entered will change the date to what was entered and exit back to the original SET TIME/DATE display. The EXIT button exits the "SET TIME/DATE" display without making any changes to the date.

5.6 “VIEW/SET PARAMETERS” DISPLAY

The PARAMETERS display is similar to the MENU display and contains multiple buttons which open various parameter sub-displays. The buttons without text are empty spaces for future parameter displays. An example of a PARAMETERS display follows:

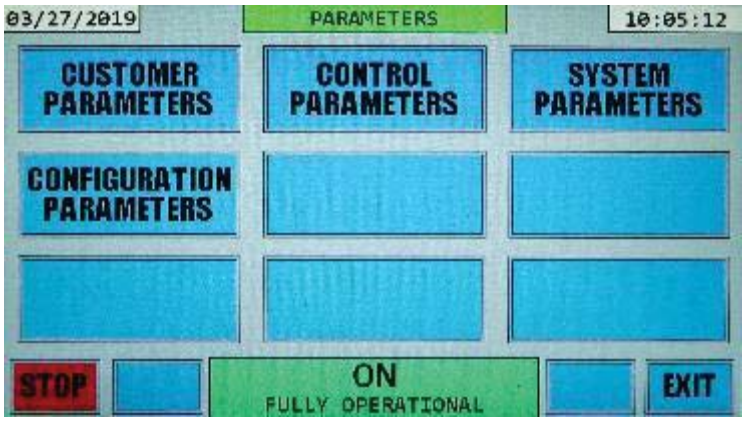

5.6.1 “CUSTOMER PARAMETERS” DISPLAY

If the CUSTOMER PARAMETERS button was pressed on the PARAMETERS display, a display similar to the following picture will appear:

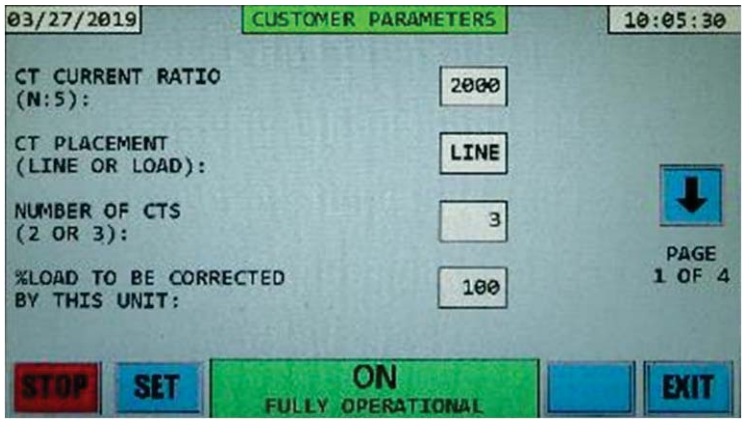

The message, “Reading Parameters Please Wait” will appear briefly as the parameters are read from memory.

In this display the operator is able to view and change customer parameters to customize the AHF for their specific application.

As in the OPERATING STATUS display, there is a Title line as the first line, the Status section at the bottom, and an Information section in between. In the information section are multiple AHF parameters that can be changed along with their present value. Note: If an Industrial Network option exists in the system, an additional parameter will exist on page 4. Use the arrow buttons to navigate the 4 pages.

- CT CURRENT RATIO (N:5) – The value of this parameter tells the system the current ratio of the external CTs being used on either the line or the load. The example shown indicates that 2000/5 ratio CTs are being used in this system.
- CT PLACEMENT – This value is either LINE or LOAD. The value entered here must agree with where the external CTs are placed – on the line side or the load side. See section 3.4 for further information.

- NUMBER OF CTS – This value is either 2 or 3 and relates to the number of phases monitored by external CTs. Most installations only need 2 CTs; however, if loads exist that draw sufficient current through the neutral power wire, 3 should be used. The value of 3 should be entered here ONLY if all 3 phases are being monitored with the external CTs.
- %LOAD TO BE CORRECTED BY THIS UNIT – This parameter only has meaning if the external CTs are on the load side. It is totally ignored if the external CTs are on the line side. If AHFs are operated in parallel (see section 3.4.3 for additional information), the external CTs must be installed on the load side. This parameter is then used to indicate what percentage of the load distortion current is to be corrected by this unit. The percentages of all units paralleled should add up to 100%. For example if three 300 amp AHFs are paralleled, two should have this value set to 33% and the 3rd should be set to 34%. The AHFs then work independently to correct their portion of the distortion. If paralleled units are different sizes, such as using a 200 amp system in parallel with a 300 amp system. The percentage selected for each unit should be proportionally divided so that the 200 amp system provides 40% (200/(200+300)) and the 300 amp system provides 60% (300/(200+300)). If only one AHF is used and the CTs are on the load side, this %LOAD value should be set to 100%; otherwise, all of the load distortion will not be corrected.

The ⬇ button on the right side of the screen indicates additional parameters exist. Press this ⬇ button to scroll through additional parameters on the next page. See the following picture for an example of the next page.

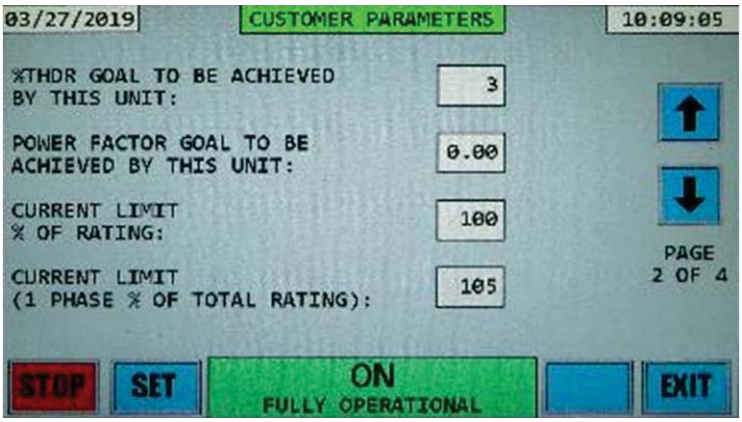

- %THDR GOAL TO BE ACHIEVED BY THIS UNIT – This parameter allows the operator to select the THDR percentage desired to be achieved on the line currents. For example if a THD of 5% is all that is required, putting a value of 5 for this parameter will ensure that the AHF does not spend extra energy trying to lower the harmonics to below 5%.
- POWER FACTOR GOAL TO BE ACHIEVED BY THIS UNIT – This parameter allows the operator to select the minimum power factor desired to be achieved from the line. For example if a power factor of 0.95 is all that is required, putting a value of 0.95 for this parameter will ensure that the AHF does not spend extra energy trying to increase the power factor to above 0.95.
- CURRENT LIMIT % OF RATING – This parameter allows the operator to select a maximum amount of correcting current delivered by the AHF required for the particular application. For example, a value of 100 for a 100 amp AHF would cause the system to deliver up to 100 amps of correcting current, while a value of 80 would cause that same 100 amp AHF to deliver only up to 80 amps. Normally this value will be set to 100; however, if the unit needs to be derated for some specific reason, this value can be set to a lower number.
- CURRENT LIMIT (1 PHASE % OF TOTAL RATING) – Often, the amount of correction needed for one phase exceeds what is needed on the other phases. This determines how much extra is allowed on a single phase prior to current limiting. Note that the average of all 3 phases still is limited to the value set in the previous parameter. Normally this value is set to 105 indicating that 105% of the unit's rated current is allowed one or two phases prior to current limiting.

The ⬇ button on the right side of the screen indicates additional parameters exist. Press this ⬇ button to scroll through additional parameters on the next page. See the following picture for an example of the next page.

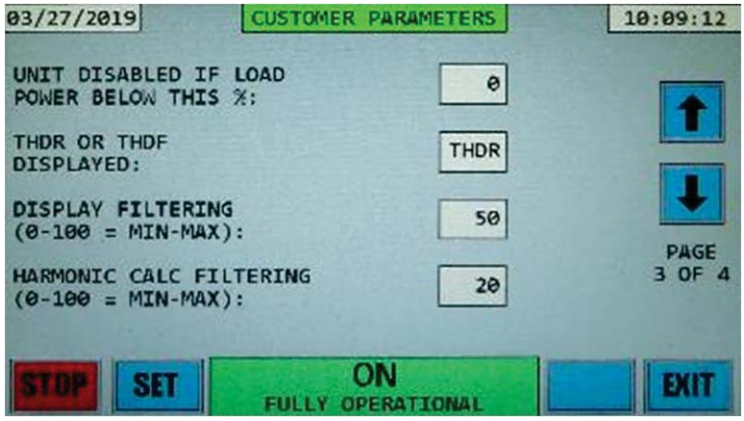

- UNIT DISABLED IF LOAD POWER BELOW THIS % - If the load power drops below this value, the AHF will stop operating and go into an IDLE state. While in the IDLE state, the AHF will keep its internal DC link capacitors charged and ready to go, but will not operate its inverter. As soon as the load power increases above this threshold value + 3% (3% added for hysteresis), the AHF's inverter will begin operating again to correct the distortion in the load current. The percentage entered is equivalent to P * D * 0.000831 KW of load, where P is the percentage and D the current rating of the AHF. As an example, if this percentage is set to 2%, a 300 amp AHF will stop and enter the IDLE state when the load power drops below 2 * 300 * .00831 = 4.99 KW. This 300 amp AHF would start operating when the load power increases above (2+3) * 300 * .00831 = 12.465 KW. This is a power saving feature for installations that don't run 24 hrs/day, 7 days per week. Even with its very high efficiency, a fully operating 300 amp AHF with no load has losses of around 1200 watts. When in the IDLE mode, the inverter and cooling fans turn off, reducing losses to below 100 watts. At the same time, the internal DC capacitors remain fully charged, so that when the load is again present, the inverter can start very quickly – no waiting for capacitors to charge. A value of 0 entered for this parameter, as shown on the sample display results in this function being disabled – in other words, the AHF will operate continuously despite what the load power drops to. A value between 0 and 50% may be entered for this parameter.
- THDR OR THDF DISPLAYED – The setting of this parameter determines whether THDR or THDF is calculated for all "total harmonic distortion" values displayed on any screens. THDR is calculated as the rms value of all harmonic components divided by the rms value of the total current (or voltage if doing voltage distortion). THDF is calculated as the rms value of all harmonic components divided by the rms value of the fundamental current (or voltage if doing voltage distortion). THDR can be in the range of 0 to 100%, 0 indicating no harmonics present and 100% indicating all of the current or voltage is composed of harmonics. THDF can range from 0% to higher than 100%. A value higher than 100% is possible if the rms of the harmonics is greater than that of the fundamental, which can occur with current drawn by loads that draw high harmonic currents. The fundamental component is the current (or voltage) that is at the same frequency as the utility supply (60 or 50 Hz).
- DISPLAY FILTERING – This setting affects the display of rms currents, rms voltages, power, etc. that occur throughout all screens and sent over the Ethernet interface(s). A higher value means that the displayed value is more heavily filtered. Loads may constantly change, resulting in constantly changing rms values. This would result in the displayed values jumping all over the place. These jumping values may be hard to read; therefore some filtering is needed to "smooth them out" so they can be better comprehended by an observer. This parameter accomplishes this task. A value of 50 is the default, as it provides the optimum filtering in most cases. It should be

noted that the amount of filtering is not a linear function of this number. For example, a very high number such as 99 has extremely high filtering, many times more than a value of 90 has. It should be noted that changing the DISPLAY value has NO affect on the actual operation of the AHF – this value simply affects the displayed values and values sent over the Ethernet interface(s). The AHF will continue to perform the same fast correction independent of these values.

- HARMONIC CALC FILTERING – This setting is similar to DISPLAY FILTERING, but affects just the harmonic and harmonic distortion values. Here, a value of 20 is the default, as it provides the optimum filtering in most cases.

  It should be noted that changing the HARMONIC CALC FILTERING value has NO affect on the actual operation of the AHF – this value simply affects the displayed values and values sent over the serial or Ethernet interface. The AHF will continue to perform the same fast correction independent of these values.

The ⬇ button on the right side of the screen indicates additional parameters exist. Press this ⬇ button to scroll through additional parameters on the next page. See the following picture for an example of the next page.

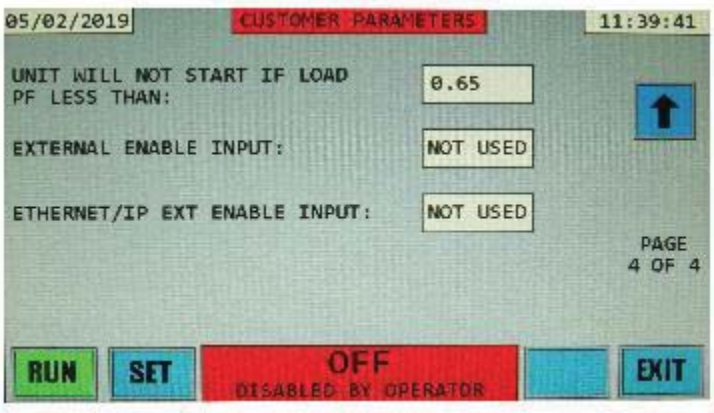

- UNIT WILL NOT START IF LOAD PF LESS THAN – This parameter prevents the unit from starting operation if the linear load power factor is below the displayed level. Linear load PF is different from load PF as the harmonic currents are filtered out prior to calculating linear load PF whereas they are not when calculating load PF. This means we are only looking at the fundamental 60 or 50 Hz power factor which in cases where a substantial amount of harmonic currents are present results in a much higher linear load PF than load PF. If CTs are not correctly positioned, the unit will calculate a linear PF that is very low or even negative. This parameter prevents the AHF from trying to operate in such cases. Operating in such cases will produce erroneous results that could result in increased harmonics in the line and/or eventual damage to the AHF. Once you have determined that your CTs are properly wired, and you indeed experience loads that have linear power factors less than 0.65, preventing the AHF from sometimes starting, this parameter can be lowered a bit to accommodate your special circumstance.
- EXTERNAL ENABLE INPUT – The AHF has the capability of being externally enabled by an externally driven dry contact. There is an input in the HMI module (see section 3.5.3 for details) that can be wired to to provide this external on/off control if needed. This parameter has the following 3 possible values:

  NOT USED – The default. Indicates that the “external enable input” is not being monitored.

  SHORT=EN – Pins 1 and 2 on the terminal block must be shorted together (by an external dry contact) for the AHF to operate.

  OPEN=EN – Pins 1 and 2 on the terminal block must have no connection across them for the AHF to operate. Shorting the two pins together will cause the AHF to stop operating.

Note that if this function is used, having the external enable present will NOT override an internal condition that is preventing the AHF from operating. It is simply an additional condition that is needed for the AHF to operate.

Note: The following parameter only applies to Ethernet/IP or Modbus TCP Enabled systems. If your system does not have the optional Ethernet/IP or Modbus TCP module, this parameter will not appear on the 4th page.

- ETHERNET/IP EXT ENABLE – The AHF has the capability of being externally enabled and disabled over the Ethernet/IP or other industrial network by an external control (e.g. a PLC). The external control sends a code word of 1 to enable the AHF and a code word of 0 to disable the AHF if this parameter is set to "USED". If this parameter is set to "NOT USED", the AHF will ignore the code word sent to it.

  Note that if this function is used, receiving the enable code over the network will NOT override an internal condition that is preventing the AHF from operating. It is simply an additional condition that is needed for the AHF to operate.

5.6.2 "CONTROL PARAMETERS" DISPLAY

The CONTROL PARAMETERS display allows the operator to view and change AHF control parameters. These parameters are set at the factory, and should only be changed by consulting the factory as needed. Please contact the factory for more information regarding these parameters.

5.6.2 "SYSTEM PARAMETERS" DISPLAY

If the SYSTEM PARAMETERS button was pressed on the PARAMETERS display, the following example display will appear:

The message, "Reading Parameters Please Wait" will appear briefly as the parameters are read from memory.

In this display the operator is able to view and change system parameters related to AHF fans and temperature limits as well as other system parameters.

In the information section are 12 AHF parameters that can be changed along with their present value.

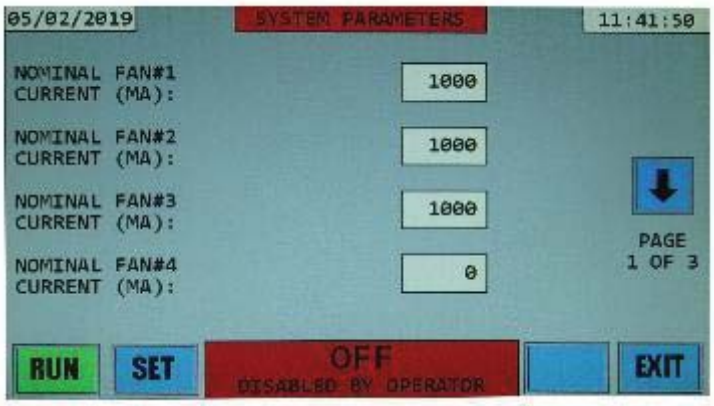

NOMINAL FAN#n CURRENT (MA) – The AHF has 6 Fan control outputs located on the DSP control board (PC-C). Fan#1 through Fan#6 control outputs connect to the board via 2-pin connectors P15, P13, P12, P11, P10, and P8, respectively. All systems have either 3 or 4 fans blowing air directly through the power heatsink fins. Each of these fans has a dedicated Fan control output on PC-C. In all systems,

Fan#1 is the fan to the far right of the heatsink and Fan#3 or Fan#4 is the fan to the far left of the heatsink. 50 through 200 amp units use 3 fans to blow air through the heatsink while the 300 amp unit uses 4 fans. 50 and 100 amp units use 119mm square x 39mm thick fans, while all other units use larger 172x150x51mm fans. In addition, the Type 1 150 and 200 amp units use a 119mm square fan (Fan#4) in its divider plate and the Type 1 300 amp unit uses two 119mm square fans (both controlled by Fan#5 output) in its divider plate. 150 thru 300 amp systems provided on a panel do not have these additional square fans, as they do not utilize divider panels.

On this display page, the Nominal currents drawn by Fan#1 through Fan#4 control outputs are displayed. Fan#5 and Fan#6 control output nominal currents appear on the next display page. The values shown in the blocks are the “nominal” current drawn by the fan(s) connected to that control output. If a value of 0 is shown, there is no fan corresponding with that output. Since this display is that of a 100 amp system, there are only non-zero numbers shown for Fan#1 through Fan#3 as there are only 3 fans in a 100 amp system. It should be noted that if only one of the heatsink fans is operating it will draw an amount of current slightly higher than the value shown here. As the number of heatsink fans operating increases, each subsequent fan added draws less current because there is some interaction between the fans. By the time all heatsink fans are operating, the total current drawn will actually be a bit less than the total of the values shown for those 3 or 4 fans.

In a 300 amp Type 1 system, the 2 fans in the divider plate are powered from the same FAN#5 output; therefore, the current shown for FAN#5 is higher than the other FAN outputs.

If a fan needs to be replaced, it should be replaced with a fan that has similar airflow and back pressure capabilities. A similar replacement should draw a similar amount of current. If this is not the case, the values for the FAN#n CURRENT can be changed.

The ⬇ button on the right side of the screen indicates additional parameters exist. Press this ⬇ button to scroll through additional parameters on the next page. See the following picture for an example of the next page.

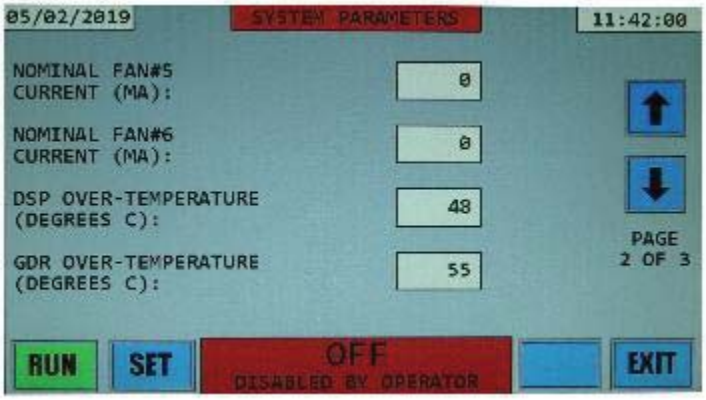

As mentioned earlier, the first 2 value on this 2nd page are the nominal currents for FAN#5 and FAN#6. FAN#5 will be zero for all units except for a Type 1 300 amp system. FAN#6 output is presently not used in any systems, so will always be zero.

DSP OVER-TEMPERATURE (DEGREES C) – If the temperature sensor on the DSP Control board (PC-C) reaches the value shown here, the unit will shut down.

GDR OVER-TEMPERATURE (DEGREES C) – If the temperature sensor on the Gate Drive boad (PC-G or PC-GP) reaches the value shown here, the unit will shut down.

The ⬇ button on the right side of the screen indicates additional parameters exist. Press this ⬇ button to scroll through additional parameters on the next page. See the following picture for an example of the next page.

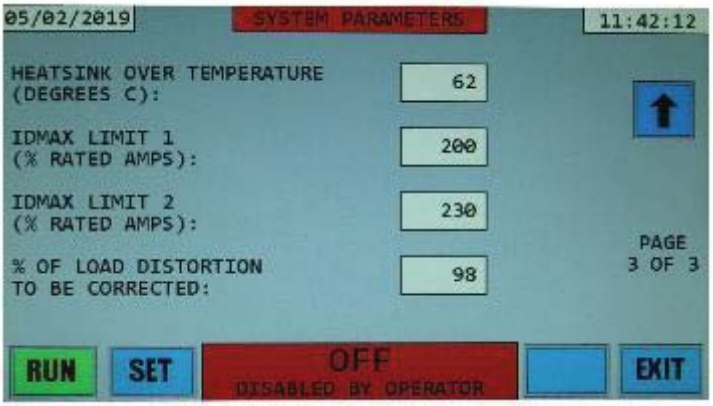

HEATSINK OVER-TEMPERATURE (DEGREES C) – If either of the two temperature sensors on the heatsink reaches the value shown here, the unit will shut down.

A warning will be issued if a temperature sensor reaches a value that is 5 degrees below the “over temperature” values displayed. A warning will result in the title and status areas being displayed with yellow (instead of the normal green) backgrounds. The unit will continue to run indefinitely while in a temperature warning state; however, if the temperature continues to rise to the over-temperature level, the unit will shut down and require a power off/power on cycle to reset the over-temperature condition and allow the unit to run again.

IDMAX LIMIT n (% RATED AMPS) – These values determine the maximum peak current that the software will limit the output of the unit to. They are listed as percentages of the rms rated values of the system (e.g. a 100 amp system is rated at 100 amps; therefore 200% of rated would result in the peak current limited to 200 amps). LIMIT 1 is the peak current that the software will limit the system to using normal means by the control. LIMIT 2 is a higher limit that if reached will result in the control taking much more aggressive action to keep the current from rising further. Under some circumstances such as disturbances in the utility or very fast and large load changes, the software may be incapable of limiting the output current to within either of these levels. In such a case there exists a hardware current limit that is approximately 310% of the rated rms current of the system. If the output current of the system reaches this hardware current limit, the unit will not be able to ride through the disturbance and will have to shut down to protect itself. Within a short period of time, the unit will start up again.

The higher these IDMAX LIMITs are set, the higher the distortion that the unit can correct. On the negative, the higher these limits are set, the higher the likelihood that the unit will have hardware current shutdowns. The limit of 200% allows comfortable current headroom to provide excellent distortion correction while also allowing comfortable current headroom to the hardware current trip level, thus minimizing hardware current trip shutdowns.

% OF LOAD DISTORTION TO BE CORRECTED – This value indicates the percentage of load distortion current to be corrected. Ideally, one might want to correct all of the distortion current; however, in practicality, trying to correct all of it results in some “overcorrecting”. This “overcorrecting” results in extra current produced that doesn’t really accomplish any additional improvement in the line current drawn from the utility. To correct for this, we limit the system to attempt to correct for “almost all” of the distortion current. A value of 97% is found to usually achieve optimum results. For a site that has a load drawing a fairly common value of around 40% THDR current, correcting 97% essentially means that the line current would have a little over 1% higher THDR content than if ideally correcting 100%. This 1% increase would still result in being able to achieve 3% THDR on the line while reducing the amount of current produced by the unit.

If needed, any of these “SYSTEM PARAMETERS” can be altered; however, the factory should be contacted before doing so. The password needed to alter parameters will then be provided by the factory. Cases where parameters might need to be altered include changing a fan that has a different current draw, operating in an environment that may see ambient temperatures exceeding 40C, etc.

5.6.3 "CONFIGURATION PARAMETERS" DISPLAY

If the CONFIGURATION PARAMETERS button was pressed on the PARAMETERS display, the following example display will appear:

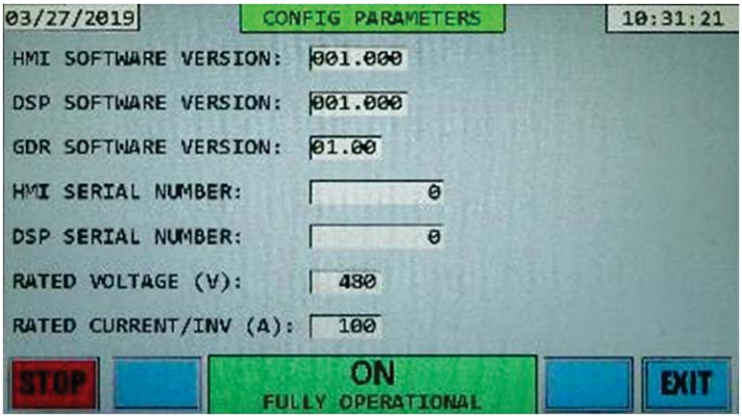

In this display the operator is able to view configuration parameters such as: AHF Software versions, AHF Serial Numbers, as well as the system Rated Voltage and Rated Current.

In the information section are 7 AHF parameters with their present value.

- HMI Software Version – The software version of the HMI "AAA.BBB" where AAA is the major revision and BBB is the minor revision.
- DSP Software Version – The software version of the DSP "AAA.BBB" where AAA is the major revision and BBB is the minor revision.
- GDR Software Version – The software version of the Gate-Drive "AA.BB" where AA is the major revision and BB is the minor revision.
- HMI Serial number – The serial number of the HMI board
- DSP Serial number – The serial number of the DSP board
- Rated Voltage – The Vac nominal voltage of the system
- Rated Current – The AHF current capacity.

5.6.4 CHANGING THE SETTING OF A PARAMETER

The following applies to the displays CUSTOMER PARAMETERS, CONTROL PARAMETERS, and SYSTEM PARAMETERS.

To protect against someone unauthorized from changing a parameter, parameters are not allowed to be changed until the operator enters a password code. Once this password code is entered, all parameters are enabled to be altered. For the CUSTOMER PARAMETERS display, the code is REDACTED.

For the CONTROL PARAMETERS and SYSTEM PARAMETERS displays, please contact the factory for the code. These parameters should only be modified after consulting with the factory.

For our example we will modify a parameter in the CUSTOMER PARAMETERS display. The screen should initially look similar to the following:

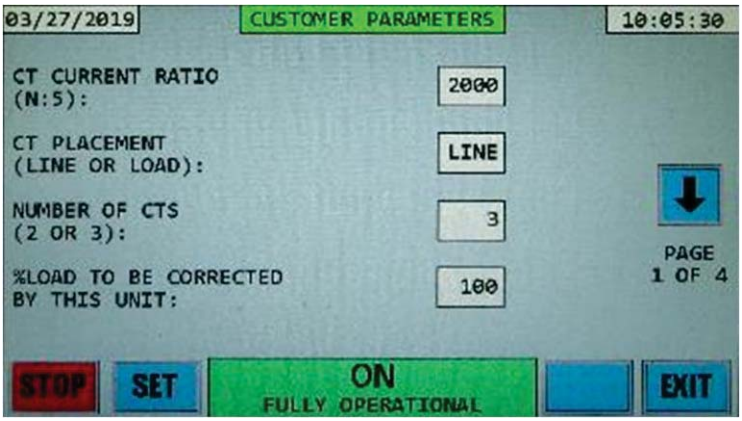

Perform the following steps to enter the code.

1. Press the SET button on the bottom left of the display. The following screen should open and have a keypad on the right side and “ENTER CODE TO ENABLE EDITING” message displayed in the information section of the display.

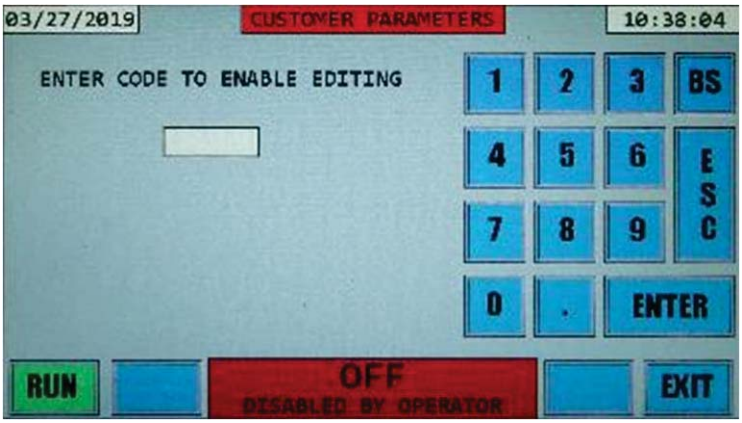

2. Using the keypad, enter the code REDACTED and press Enter. Use the backspace button “BS” to delete an incorrectly entered character. The following screen should open.

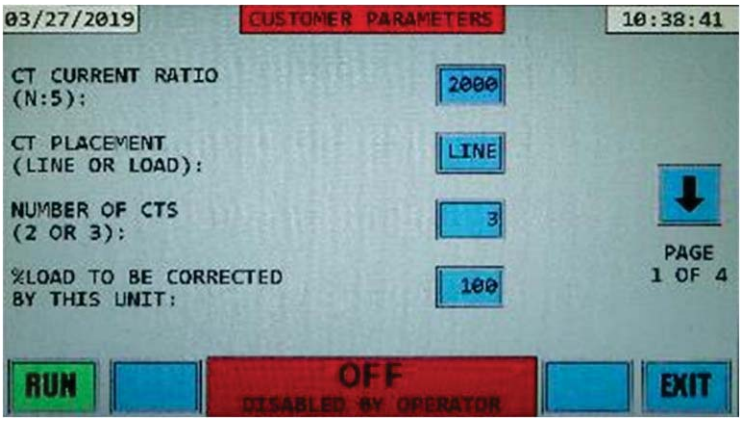

3. Note that the parameter values are now inside blue rectangles surrounded by grey borders. This indicates that these are now buttons that can be to change the parameter desired. In the following example we will modify the CT PLACEMENT parameter from the value LINE to the value LOAD.

4. Press the parameter button whose value you want to change. In our example, the button next to parameter CT PLACEMENT. The following screen will open.

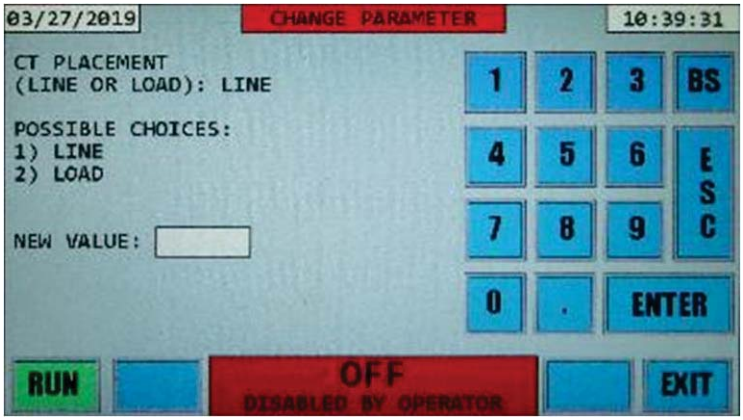

5. There is now a keypad on the right side of the display. At the top of the information section is the present parameter value, in our example “LINE”. Below that are the possible choices for the parameter. In this example there are 2 choices Line or Load. Entering 1 will choose Line for the new value, entering 2 will choose Load for the new value. Entering any other number will result in the error message “BAD INPUT – TRY AGAIN” being displayed.

   For some of the other parameters, a range of possible values will be displayed. For example 100-30000 for CT CURRENT RATIO. In this case a number smaller than 100 or larger than 30000 would result in an error message, “BAD INPUT – TRY AGAIN” being displayed.

   In our CT PLACEMENT example we will enter the number 2 with the keypad indicating that we want CTs to be placed on the load side. Then press Enter. The following screen will open.

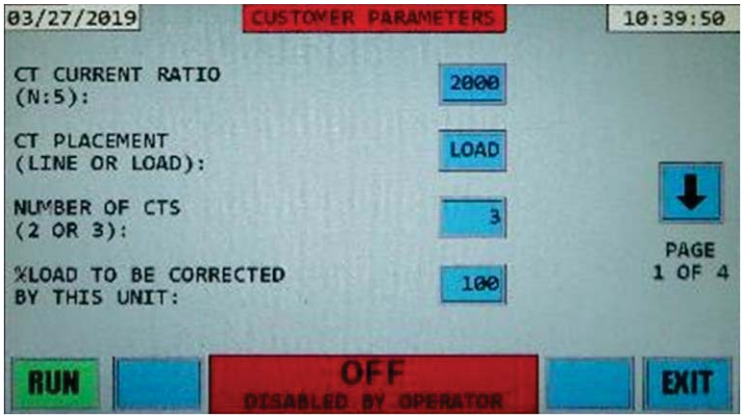

   Note that the blue box next to CT PLACEMENT now says LOAD.

6. If desired, you can go on and change additional parameters. To change parameters on another page, press the arrow ⬇ ⬆ buttons on the far right of the information section of the display.

7. To save the new parameter(s) to the system memory, press the EXIT button. The following screen will appear asking if you want to SAVE CHANGES AND EXIT or EXIT WITHOUT SAVING CHANGES. Press SAVE CHANGES AND EXIT. The PARAMETERS display will open. The parameter CT PLACEMENT (and any other parameters changed during this session) is now set to the new value and saved in memory.

If you decided that you don't want to save the new parameter value(s), press EXIT WITHOUT SAVING CHANGES. The MENU display will open and the parameter value(s) will remain unchanged in system memory.

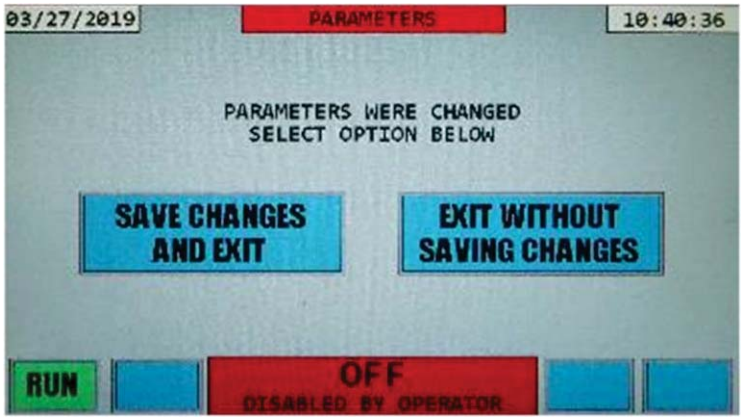

In the CUSTOMER PARAMETERS display, all parameters except the first 3 shown on the first page can be changed with the AHF running (enabled) or when the AHF is shut down (disabled). To change these 3 parameters, the AHF must be disabled. These 3 parameters involve the CTs, so if they are not the correct value and, therefore, need to be changed, the unit should not be running in the first place, as doing so would cause erroneous operation. The system must be disabled (not just OFF for some other reason) to change one of these 3 parameters. If the button in the bottom left of the display is the STOP button, the system is not disabled. This button should say RUN if the system is disabled.

5.7 "CT SETUP" DISPLAY

Pressing the "CT SETUP" button on the MAIN MENU display will result in the CT SETUP screen being displayed:

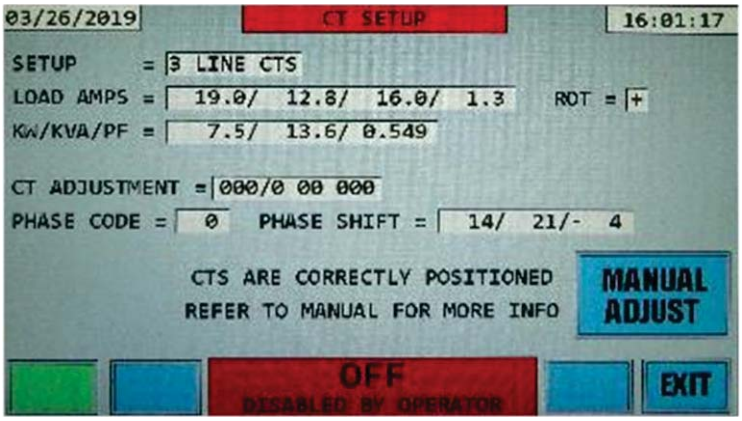

This display is very useful in determining if the external LINE or LOAD placed current transformers (CTs) are placed on the correct phases and in the correct direction. Section 4 of this manual covers how to use this display to check the placement of the CTs.

5.8 "HISTORY" DISPLAY

The HISTORY display is similar to the MENU display and contains multiple buttons which open various history sub-displays. The buttons without text are empty spaces for future history displays. An example of a HISTORY display follows. Press the EXIT button to revert back to the MAIN MENU display.

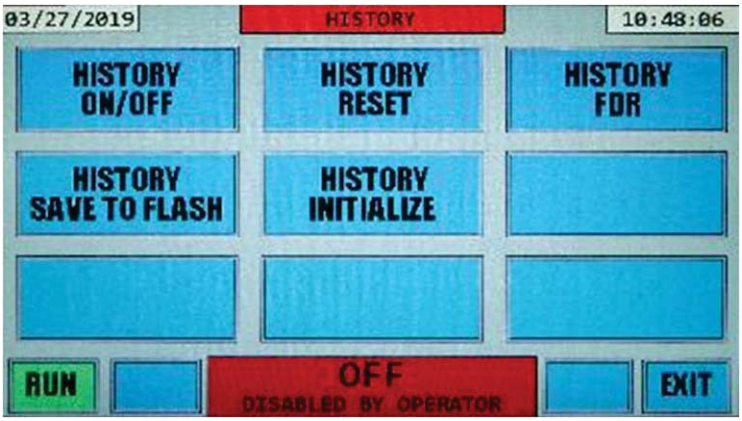

5.8.1 "HISTORY ON/OFF" DISPLAY

The HISTORY ON/OFF DISPLAY allows the operator to view the AHF shutdown event historical database.

This database contains the date and time the system starts operating (correcting harmonics, etc.) and stops operating. The reason for a unit to stop operating could be intentional (system is disabled) caused by an operator pressing the STOP button on the front panel LCD display, by an operator issuing an ACDIS command over the Ethernet communications connection, or by receiving an external disable signal (if that feature is activated). The reason for a unit to stop operating could be due to an unavoidable external condition such as loss of utility voltage (or dropping out of tolerance) either due to unit being powered off via the front power switch or a utility interruption. The reason for a shutdown could be due to a temporary condition that the unit was unable to deal with requiring the unit to shut down and restart, such as a hardware current trip. Also, the reason could be due to a problem such as over-temperature (dirty filter or inoperable fan) or internal problem detected. Each time the AHF's power inverter shuts down, a snapshot of several operating parameters (voltages, currents, temperature, etc.) are saved along with the reason for the shutdown. The last 480 "on-off" events are stored in non-volatile flash memory on the DSP Control board inside the AHF (not in the HMI module), thus this information is preserved even when the unit is totally powered down. When more than 480 shutdown events occur, the oldest events are erased from memory to make room for the latest events.

Open the HISTORY ON/OFF display from the HISTORY display. An example of a HISTORY ON/OFF display follows.

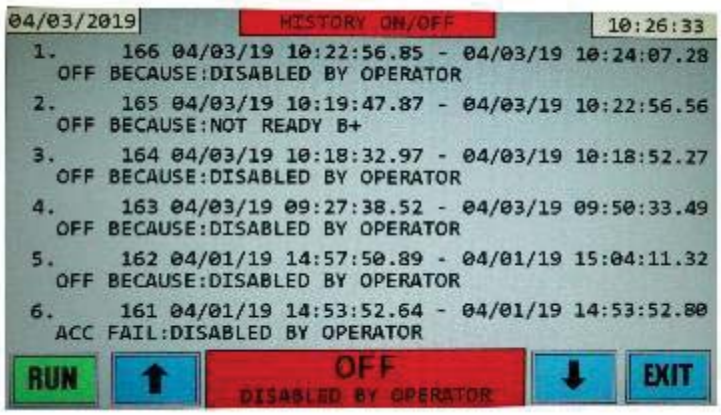

The display contains 2 lines of data for each shutdown event. The events are displayed from newest to oldest. Using the arrow buttons on the bottom of the display it's possible to navigate the database to view even older events, up to 480 events. The first number in each row with a period after it, is the event number with number 1 being the latest event. The second number in each row is the internal database

count. In the example display shown in the picture, the first row contains event number 1 being the latest event, and the internal database count is 166, which means 166 shutdown events have been recorded so far, and the latest event is the 166th one in the database.

Following the internal database count is the date and time the unit began operating followed by a dash and the date and time the unit stopped operating. The message on the line below the date and time is the shutdown reason. In the example screenshot it says “OFF BECAUSE: DISABLED BY OPERATOR” which indicates that the unit shut down because the operator pressed the STOP button or entered ACDIS over the Ethernet network. The following section has additional features of the HISTORY ON/OFF DISPLAY. Press the EXIT button to revert back to the HISTORY menu display.

5.8.2 “HISTORY ON/OFF VERBOSE” DISPLAY

To see more detailed information about a specific shutdown event, press the touchscreen anywhere on the text for that event. This will open a new display called ON/OFF VERBOSE. See the screenshot below. Press anywhere within the 2 lines of text for that event (outlined with a red line for event 1 in the following example) to open the ON/OFF VERBOSE display for that event. The verbose information for any of the events displayed on the page can be displayed by pressing similarly within the 2 lines of text for that event.

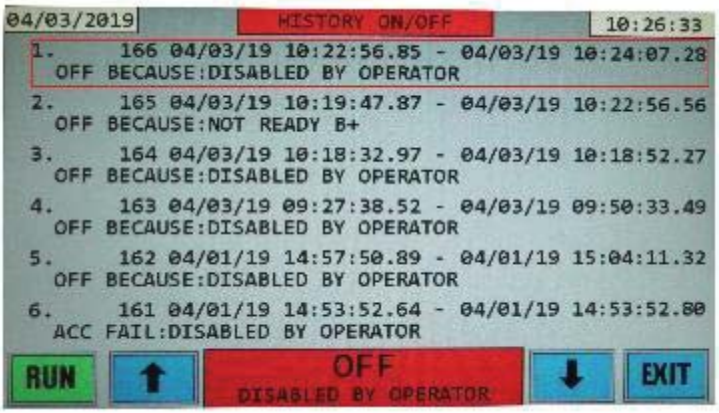

The screenshot below shows the ON/OFF VERBOSE display which will open for event 1.

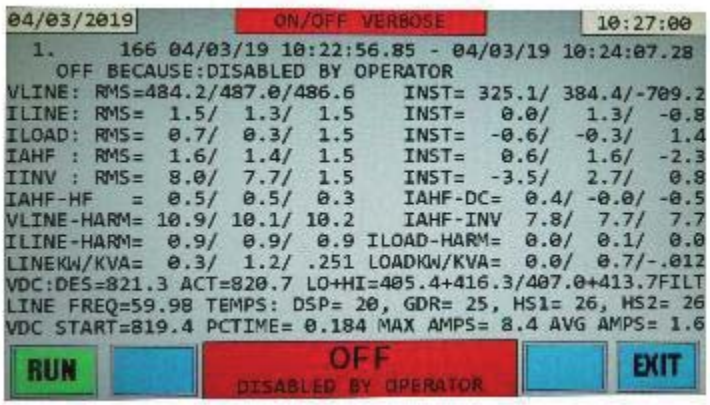

In the ON/OFF VERBOSE display, along with the ON/OFF shutdown reason line, there are 12 additional lines containing operational information at the time the unit shut down.

The first additional line, VLINE contains line-to-line voltage information for all 3 phases Vab, Vbc, and Vca. On the left side are the rms values of these voltages and on the right side are the instantaneous values of these voltages. Since the voltages are sinusoidal and vary between – and + values, the

instantaneous voltages will have both positive and negative values, whereas the rms values will always be positive.

The next 4 lines are currents for all 3 phases A, B, and C. ILINE are the currents from the utility, ILOAD are the currents drawn by the load, IAHF are the currents drawn by the AHF, and IINV are inverter output currents produced by the AHF, which will be fairly similar to the AHF currents. Similar to the line voltages, the left side of the ILINE, IAHF, ILOAD, and IINV main currents are rms values and the right side are instantaneous values. IAHF-HF indicates the amount of high frequency rms current the AHF was emitting to the line. This value should be less than 1% of the AHF current rating. If not, it could indicate a problem with the high frequency filtering in the unit. IAHF-DC is the amount of DC current the AHF was emitting into the line. These values will normally swing within +/- 3% of the AHF current rating. Higher values (either positive or negative) could indicate a possible problem with the inverter or the AHF current sensors, or an unusual load.

LINE_FREQ is the frequency of the line voltage.

VDC:DES and ACT are the DC voltage that the system is trying to maintain (DES short for desired) and the ACTUAL DC voltage across the DC Link capacitors averaged over the last AC line period. LO+HI is the instantaneous voltage across the lower and upper halves of the DC Link capacitance. DC_VOLT FILT voltages represent slightly filtered versions of the instantaneous DC link voltages, but not nearly as filtered as the VDC:ACT voltage.

TEMPS DSP and GDR are the temperatures on the control boards. DSP temperature will usually be close to the room ambient temperature as it is close to the air intake to the AHF. GDR will be elevated due to its proximity to the heatsink. HS1 and HS2 are temperatures on the left and right side of the heatsink. They normally will be close in value to each other, but several degrees higher than the DSP temperature unless the unit is not running or is very lightly loaded.

ILINE-HARM and ILOAD-HARM are the harmonic current content in rms amps of the currents drawn from the line and currents delivered to the load side.

LINEKW/KVA are the KW (power in kilowatts), KVA (kilovolt-amperes), and power factor of the power drawn from the line and power delivered to the load.

VLINE-HARM are the line-to-line voltage harmonic content in rms volts of the line voltages.

IAHF-IINV are the rms values of the difference between the AHF and INV currents. The INV currents are similar to the AHF currents except they contain high frequency currents produced by the switching of the inverter. It is necessary to keep these high frequency current components from reaching the line, so they are removed by internal power filtering components prior to the point where the AHF currents are measured. These values are normally about 10-15% of the current rating of the AHF. Values higher than this indicate a problem with either the AHF or INV current sensors.

VDC START is the voltage of the capacitors at the start of precharge. PCTIME is the time in seconds it took to charge the capacitors. MAX AMPS is the maximum capacitor precharge current which occurred during precharge.

To exit the ON/OFF VERBOSE display and go back to the HISTORY ON/OFF display, press the EXIT button on the bottom of the display.

Now press the arrow buttons on the bottom of the display to view more shutdown events. Press EXIT to go back to the HISTORY MENU.

5.8.3 “HISTORY RESET” DISPLAY

The HISTORY RESET DISPLAY allows the operator to view the AHF reset event historical database. This database contains information about each time the AHF microcontroller is reset. Information recorded includes date and time when the event occurred and the cause of the reset. A processor reset occurs every time power is applied to the unit; therefore, most resets that appear in this data base will be “POWER-UP” resets. However, the appearance of abnormal resets may be useful in diagnosing a

possible problem. The last 1,856 “Reset” events are stored in non-volatile flash memory on the DSP control board.

Open the HISTORY RESET display from the HISTORY display. An example of a HISTORY RESET display follows.

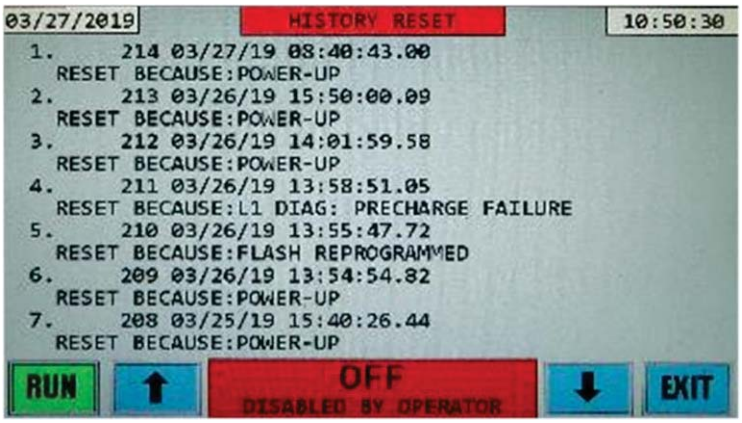

The display contains 2 lines of data for each reset event. The events are displayed from newest to oldest. Using the arrow buttons on the bottom of the display it’s possible to navigate the database to view even older events, up to 1,856 events. The first number in each row with a period after it, is the event number with number 1 being the latest event. The second number in each row is the internal database count. In the example display shown in the screenshot, the first row contains event number 1 being the latest event, and the internal database count is 214, which means 214 reset events have been recorded so far, and the latest event is the 214th one in the database.

Following the internal database count is the date and time the unit reset. The message on the line below the date and time is the reset reason. In the example picture, event 1 says “RESET BECAUSE:POWER-UP” which indicates that the unit reset because the power was cycled on the unit. A few other reset reasons can be seen in the picture also. See the Troubleshooting section 9 for a list of possible reset causes.

5.8.4 “HISTORY FDR” DISPLAY

The HISTORY FDR DISPLAY allows the operator to view and save to a USB flash drive, the AHF flight data recorder (FDR) event historical database. The flight data recorder captures 4½ 60Hz AC line periods (or 4 50Hz AC line periods) of 10 parameters of waveform data sampled at 20,000 times per second. Parameters captured are Line Voltages, CT Currents, AHF Currents, Inverter Currents, and Inverter Capacitor Voltage at the time of a system shutdown. With this data it’s possible to plot the 10 waveforms and analyze the system behavior at the time of a shutdown. This is very useful for troubleshooting issues which caused the unit to stop operating correctly and resulted in a shutdown.

FDRs can be easily saved to a flash drive. The flash drive USB port is located under the protective cover to the right of the LCD screen on the front panel of the HMI. Refer to section 3.5.6 on opening the cover and locating the USB port. Note: if saving FDRs for more than one unit, use a separate flash drive for each unit. FDRs are saved with the history event number as the file name with a .FDR file extension. Different AHFs could have similar event numbers. If a file name already exists on the flash drive, that file will get overwritten.

The FDR data is saved to the USB flash drive in a simple ASCII text file format with the extension .FDR. It’s possible to open this text file with a spreadsheet or any data plot program and plot the data for the purpose of analyzing system behavior. Each .FDR file is about 350kb in size, and the FDR database can save up to 100 FDRs, thus only about 35MB is needed to save all possible FDRs.

Open the HISTORY FDR display from the HISTORY display. An example of a HISTORY FDR display follows.

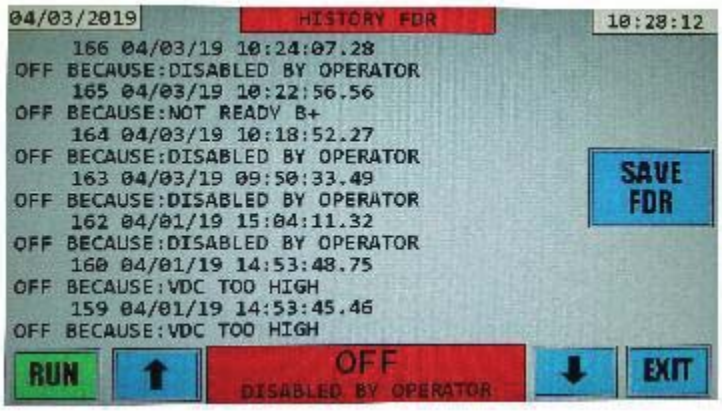

The database list on this display contains the same information as the HISTORY ON/OFF display. See section 5.8.1 for more details. The FDR event is saved every time the system stops operating, which is why this information is similar to the HISTORY ON/OFF display. The only difference is, only the shutdown time is shown, not the start time. Also each event number is the number in the internal database, thus in the screenshot above, event 166 is the latest event, and the 166th event recorded in the database. It corresponds exactly to event 1 in the HISTORY ON/OFF display. Use the arrows on the bottom of the display to scroll through all FDRs in the database.

To save an FDR event(s) to the USB flash drive, you must first select which event(s) you want to save. It's also possible to save all of the FDR events in the database without having to select individual events.

In the following example, we will save the first three FDR events to the flash drive. In the screenshot below, events 166, 165, and 164 will be saved. To select an event, simply press the touchscreen anywhere on the 2 lines of text for the FDR desired to be saved. See the following screenshot.

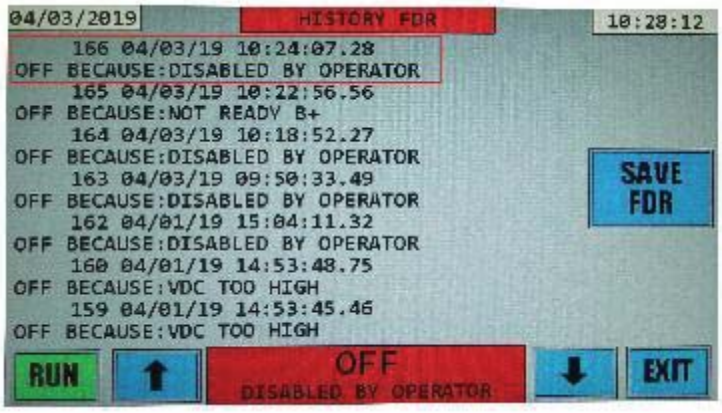

To save event 166 in the screenshot above, touch the screen anywhere within area outlined with the red box.

When event 166 is touched, the text of the event row becomes blue. See the following screenshot.

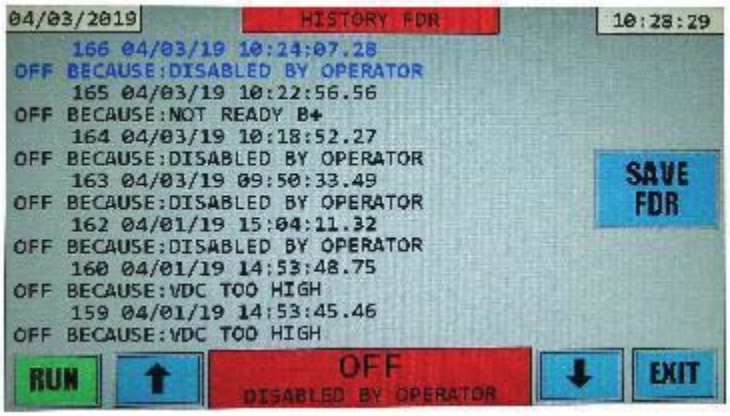

The text of event 166 became blue to indicate that this event is selected.

Repeat this for events 165 and 164. Now all 3 events have blue text. See following screenshot.

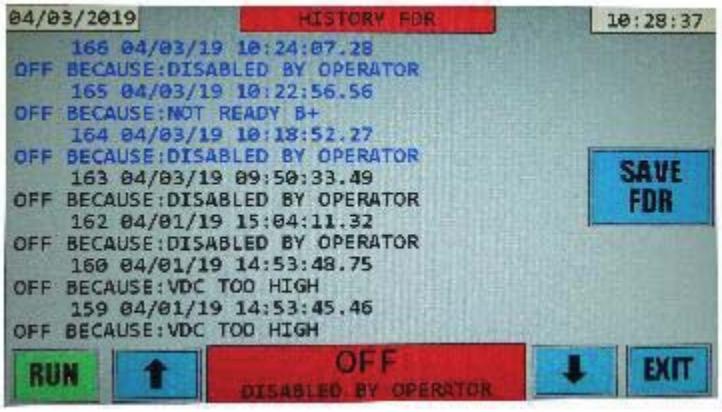

If you selected an FDR event that you wish to un-select, simply press on the text of the event (now blue) again and the text will change back to black to indicate that it's no longer selected.

After the events which you want to save have been selected, press the SAVE FDR button. The following screen will open, see picture below.



You have a choice to save either the selected FDRs (166,165,164) in our example, or to save all FDRs presently stored in memory. It takes approximately 20 seconds to save each FDR to the flash drive. To save the 3 selected FDRs would take about a minute. Up to 100 FDRs can exist (corresponding to the last 100 ON/OFF events; therefore, it could take up to 100x20 seconds = 33 minutes to save 100 FDRs.

Either press the SAVE SELECTED FDRS TO FLASH button to save the selected FDRs or press the SAVE ALL FDRS TO FLASH to save all FDRs to the flash drive. The flash drive is detected by the system and goes through USB enumeration. You will briefly see a message “USB ENUMERATION IN PROGRESS PLEASE WAIT”. Now the system will begin saving the FDRs to the flash drive.

The message “FLIGHT DATA RECORDS BEING SAVED TO FLASH DRIVE PLEASE WAIT” will be displayed. There will be a progress bar indicating how many FDRs still need to be saved, and which FDR is currently being saved out of the total. The bar will fill in green as each FDR is saved. See photo below for example of what you should see.



Note: Do not remove the flash drive while the FDRs are being saved, as this may cause the file and or the flash drive to be corrupted. If once you start saving FDRs you decide you don’t want to save all of the selected FDRs, simply press the EXIT button. After the current FDR being saved completes, no additional FDRs will be saved.

When all of the FDRs are done being saved to the flash drive, you will see a message similar to the following picture. In this example we saved 3 FDRs.



Press the EXIT button to exit to the HISTORY menu display.

Saving FDRs to the flash drive will result in a separate file saved to the root directory of the flash drive with a .FDR extension for each FDR. Each file will be named with the event number of the FDR. In our example we saved FDRs 166,165,164, so the files are named 00000166.FDR, 00000165.FDR, and 00000164.FDR.

Each .FDR file is an Ascii file and can be opened with a text editor or a spreadsheet program such as Microsoft Excel. The first line is a title line containing the event number, the date & time, and reason for the shutdown. The 2nd line contains the names of the 10 parameters saved:

Vab Vbc Ict_a Ict_b Ict_c IAHF_a IAHF_b Iinv_a Iinv_c Vdc

This is followed by approximately 3000 lines of data. Each line has the value of the 10 parameters taken approximately every 50 usecs for a period of 4½ 60 Hz line periods (or 4 50 Hz line periods). All but the last line period of data occurred before the shutdown happened. The last line period of data occurred after the shutdown happened. The data is formatted in scientific notation form and is separated by spaces.

This data, when input to a spreadsheet or plot program, can be plotted to see the system behavior over the captured time period at the time of the system shut down. The manufacturer may ask you to send these files so that they can troubleshoot your unit if it is having problems.

5.8.5 "HISTORY SAVE TO FLASH" DISPLAY

The HISTORY SAVE TO FLASH DISPLAY allows the operator to save a large amount of diagnostic data in the form of an ASCII file to a USB flash drive. This data consists of system status information, system parameter settings, and the entire History On/Off and Reset database. This information is very useful when troubleshooting issues which caused the unit to stop operating correctly. When a problem occurs, the factory will often ask for this diagnostic file to assist with troubleshooting an issue.

Open the HISTORY SAVE TO FLASH display from the HISTORY display. An example of a HISTORY SAVE TO FLASH display follows.



First make sure that a USB flash drive is inserted into the USB port on the front panel. The flash drive USB port is located under the protective cover to the right of the LCD screen on the front panel of the HMI. Refer to section 3.5.6 on opening the cover and locating the USB port.

To save the diagnostic data, press the SAVE AHF DIAGNOSTIC DATA button. Note this may take a few minutes depending on the number of History On/Off and History Reset events in the database.

The flash drive is detected by the system and goes through USB enumeration. You will briefly see a message "USB ENUMERATION IN PROGRESS PLEASE WAIT".

Then a message will come up with a status bar which fills in green as the data is saved to the flash drive. See photo below.



When the data is finished being saved to the flash drive the following message will be displayed SUCCESSFULLY SAVED “DSP SERIAL NUMBER.DIA” TO THE FLASH DRIVE PLEASE EXIT TO MENU. See photo below.



The file will be named with the same number as the DSP board serial number and have the extension .DIA for diagnostic.

In our example, our DSP board serial number is 0, so we would find the file 00000.DIA on the flash drive. You can open the file with a text editor such as notepad.

The file contains the same information which can be obtained by entering several commands over the Ethernet network. See section 6 for more details. The first data is a copy of the S command as described in section 6.2.7. This is followed by the OPT command as in section 6.2.5, KSET command in section 6.2.4 and other parameter commands as well as History On/Off and History Reset commands as in section 6.2.3.

It’s also possible to obtain the same information by entering these commands over the Ethernet network, copying the results, and creating your own text file with the same data, however the HISTORY SAVE TO FLASH display allows you to simply press a button, and this information is automatically saved to a flash drive. This is especially useful when access to an Ethernet network is not available. In most cases you would simply send the .DIA file to the factory for analysis and troubleshooting

5.8.6 “HISTORY INITIALIZE” DISPLAY

This display allows the operator to initialize sections of system memory related to the History displays. The factory may instruct you to enter this display in certain cases to help with troubleshooting and fixing issues. Contact the factory for more information.

5.9 “ETHERNET INFO” DISPLAY

Prior to selecting the “ETHERNET INFO” display from the MENU, the Ethernet port should be connected to a switch, hub, etc. in your network via a straight through Ethernet patch cable, or connected directly to a computer using a crossover Ethernet cable or a straight through cable via Auto-MDIX. For more information on setting up your computer or laptop to talk to the AHF via a crossover cable or via Auto-MDIX, see section 5.9.3 of this manual.

The Ethernet port is located on the back of the HMI front panel assembly on the right side when looking at the back of the front panel. It’s the top weatherproof connector. See picture below. The Ethernet port is circled in red. There is a blue Ethernet Cat 5 cable connected to the port in the picture. Also see section 6 of this manual for additional information about Ethernet.

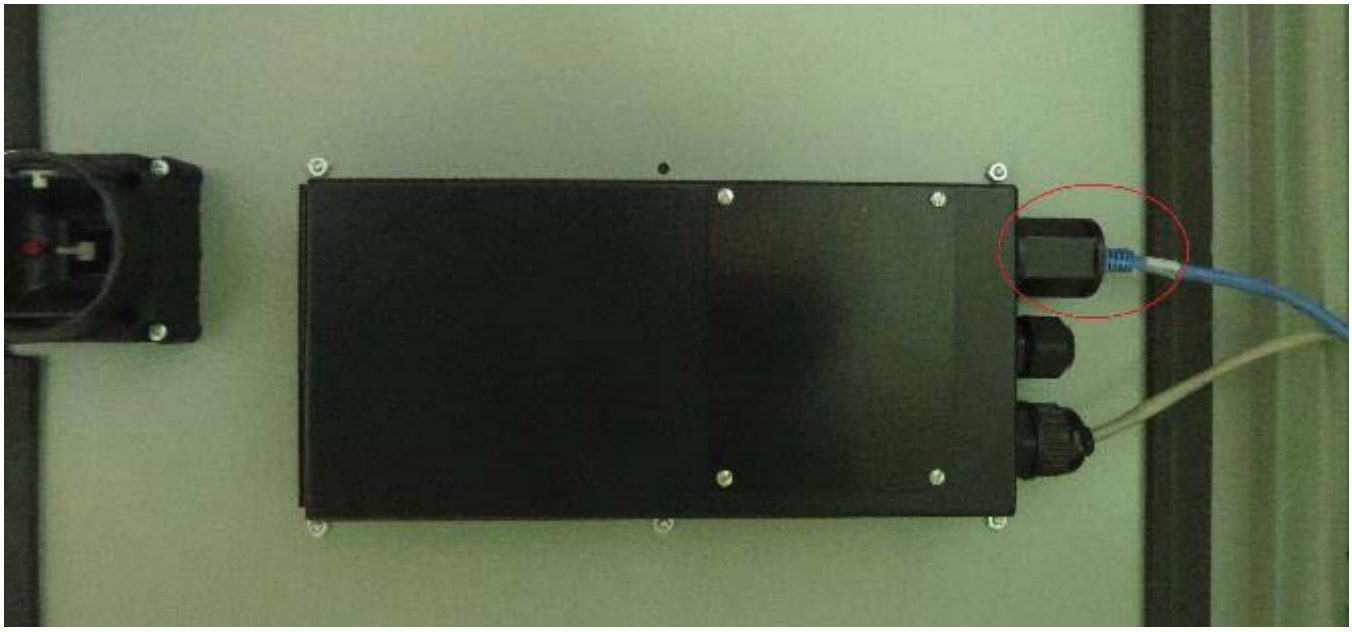

Your system is shipped with its Ethernet DHCP enabled. This will allow your network (or computer) to automatically assign an IP address to the AHF.

In addition to displaying the automatically determined IP address, the ETHERNET INFO display allows the operator to enter and set a static IP address, subnet mask, and default gateway address.

After opening the ETHERNET INFO display from the MENU display you should see something similar to the following picture:

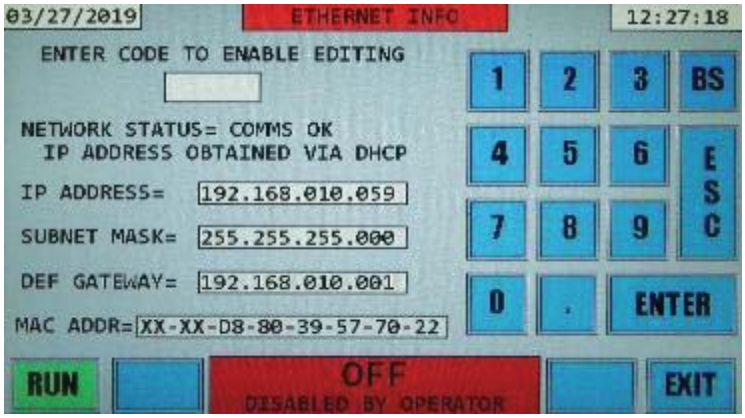

At the top of the information section it says ENTER CODE TO ENABLE EDITING. This is used to enter the display for changing the IP address mode: Static IP Address or DHCP IP Address. This will be covered in section 5.9.1.

Next is the NETWORK STATUS line. This shows the status of the Ethernet Network. If an Ethernet cable is plugged in to the Ethernet port, the NETWORK STATUS should say COMMS OK. If there is no Ethernet cable connected, NETWORK STATUS will say COMMS ERR. Even if the Ethernet cable is connected, but the network is having problems, NETWORK STATUS may say COMMS ERR. If you see this message and the Ethernet Cable is connected, check the functionality of your network.

In our example, the next line says IP ADDRESS OBTAINED VIA DHCP. This line could also say IP ADDRESS IS STATIC. This depends on the IP address setting. Your system is shipped with its Ethernet DHCP enabled.

The next 3 lines are the present networking information of the unit. First is the IP Address of the system followed by the Subnet Mask and Default Gateway Address. The last line is the MAC Address of the unit. The IP Address will be needed to use the Ethernet Communications Interface in section 6.

5.9.1 CHANGING FROM DHCP TO STATIC IP ADDRESS

Your system is shipped with its Ethernet DHCP enabled. If you want to set a static IP address, perform the following steps.

1. Using the keypad on the ETHERNET INFO display, enter the code REDACTED and press Enter. Use the backspace “BS” button to erase incorrectly entered characters.

Now a blue button will be displayed at the top of the information section of the display. This button will say CHANGE TO A STATIC IP ADDRESS. See the following picture.



2. Press the CHANGE TO A STATIC IP ADDRESS button. This button will now say CHANGE TO A DHCP IP ADDRESS. The values next to IP ADDRESS, SUBNET MASK, and DEF GATEWAY now have blue rectangles around them which indicate that these are buttons. See the following picture.

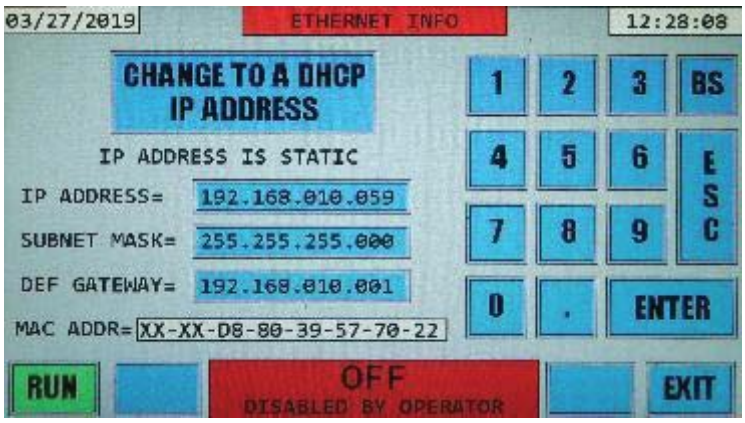

3. If you want to simply set the current IP Address which was determined by DHCP to a static IP address (this is very common), simply press the EXIT button on the bottom right of the display and go to step 4. If instead you want to edit the IP address manually and enter new values, continue on to step 4.

4. To edit a network address value, press one of the blue buttons next to it. For example, we will change the IP Address from 192.168.010.059 to 192.168.010.060. Only enter an IP address which is appropriate for your network. If you are unsure, ask your network administrator. Press the blue button next to IP ADDRESS. The rectangular area next to IP ADDRESS now became white with the last 3 digits have been erased, and the rectangular areas next to SUBNET MASK and DEF GATEWAY have become gray. This indicates that IP ADDRESS is being edited. If you are changing the SUBNET MASK, the IP ADDRESS and DEF GATEWAY lines would become gray. The last 3 digits of IP ADDRESS have been erased because in cases where you used DHCP to get an IP address, you will only be changing the last 3 digits. If you need to change anything in the first 3 groups of numbers in the IP address, press the backspace “BS” button and more digits will be erased. If you do erase the other IP Address digits and begin to enter new ones, you don’t need to type in the periods after each 3 digits, they will be automatically inserted. See the following picture:

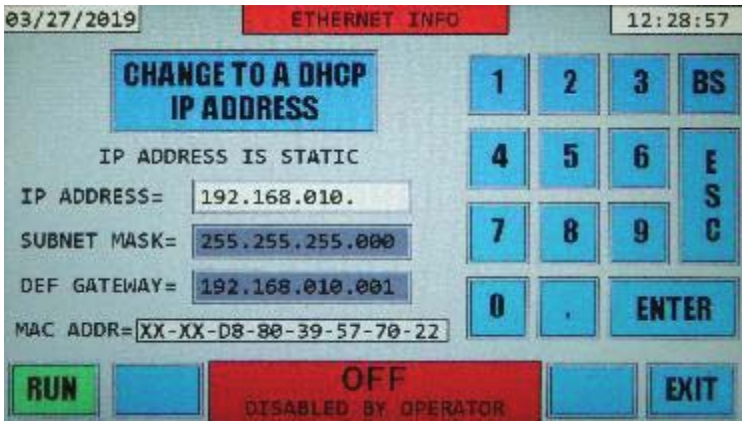

The period key is disabled in this screen. Now in our example we enter 060 with the keypad. After pressing Enter, the rectangular area around IP ADDRESS became blue again, and the IP Address inside this area is now 192.168.010.060 as shown in the following picture:

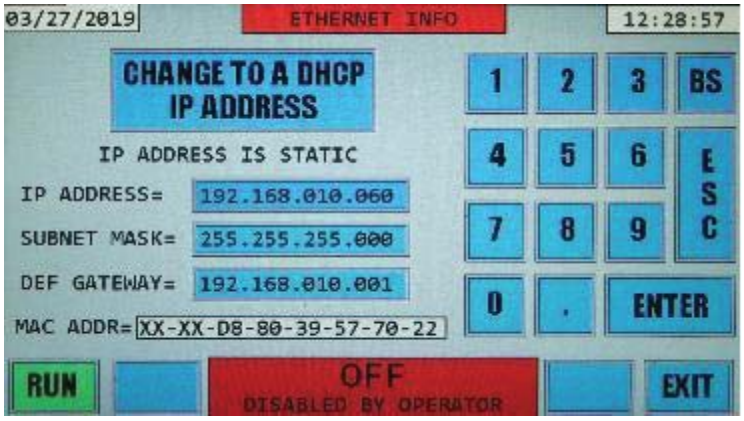

If needed, the subnet mask and default gateway can also be altered; however that is not necessary for this case. When done, press the EXIT button.

5. A new display opens with a message saying IP ADDRESS PARAMETER WAS CHANGED. SELECT OPTION BELOW. Now you have a choice, SAVE CHANGES AND EXIT if you want to save the changes made to system memory and set it static, or EXIT WITHOUT SAVING CHANGES if you don't want the changes to take effect, and want the IP Address to remain DHCP. After pressing one of these two buttons, the display exits to the MENU display. See picture that follows:

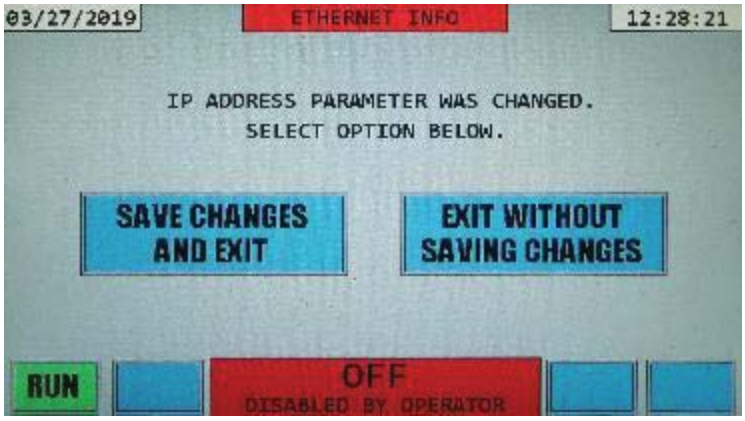

5.9.2 CHANGING FROM STATIC IP ADDRESS TO DHCP

If your IP Address is set to static and you want to enable DHCP, perform the following steps.

1. Using the keypad on the ETHERNET INFO display, enter the code REDACTED and press Enter. Use the backspace "BS" button to erase incorrectly entered characters.
2. Now a blue button will be displayed at the top of the information section of the display. This button will say CHANGE TO A DHCP IP ADDRESS. See the following picture.

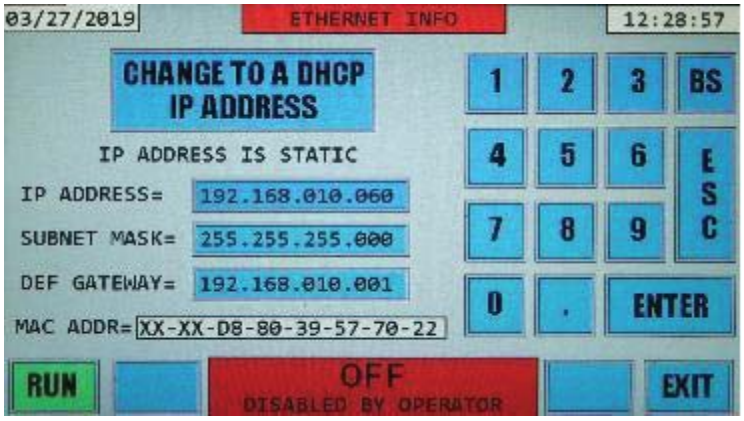

3. Press the button CHANGE TO A DHCP IP ADDRESS. You will see a message which says GETTING IP ADDRESS VIA DHCP PLEASE WAIT… See following picture.



The system will now determine an IP address, Subnet Mask, and Default Gateway Address via DHCP, and display the new information on the screen. The option to go back to a static IP address is still available via the CHANGE TO A STATIC IP ADDRESS button which now appears at the top. See the following picture.

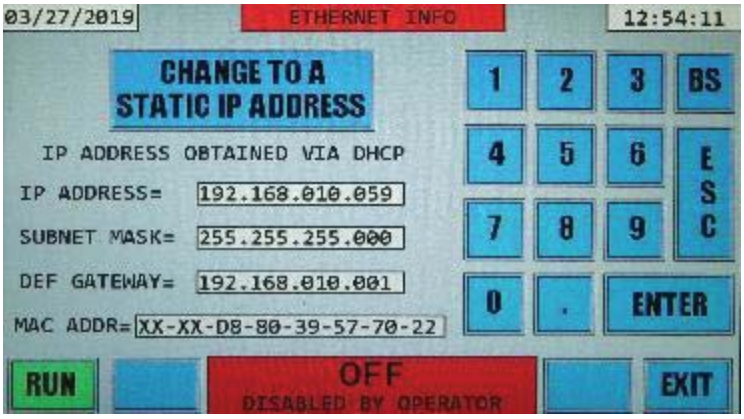

4. To save the new DHCP IP address to memory, press the EXIT button on the bottom right of the display. A new display opens with a message saying IP ADDRESS PARAMETER WAS CHANGED. SELECT OPTION BELOW. Now you have a choice, SAVE CHANGES AND EXIT if you want to save the DHCP obtained IP address to system memory and set it DHCP (meaning every time the system powers up, a new IP Address will automatically be found via DHCP), or EXIT WITHOUT SAVING CHANGES if you don't want the changes to take effect, and want the IP Address to remain static. After pressing one of these two buttons, the display exits to the MENU display. See picture below.

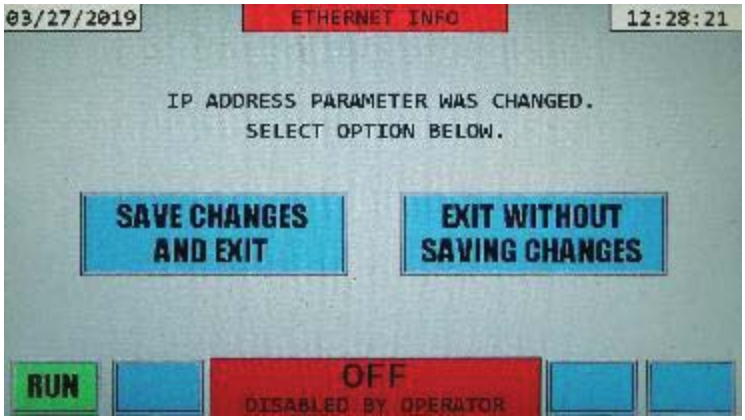

5.9.3 ETHERNET USING CROSSOVER CABLE OR AUTO-MDIX

Often in the field, there is no Ethernet network available, and to communicate with the HMI module, the operator must connect the HMI directly to a computer or laptop over Ethernet. This can be accomplished in three ways: using a crossover Ethernet cable between the HMI and computer, connecting both the HMI and computer to an Ethernet switch using 2 standard Ethernet patch cables, or using a standard Ethernet patch cable directly between the HMI and a computer equipped with Auto-MDIX.

Auto-MDIX or Automatic medium-dependent interface crossover is a feature found on most modern computers. This allows the operating system to automatically configure the Ethernet connection without the need for a crossover cable. If you are unsure if your computer has Auto-MDIX and you don't have a crossover Ethernet cable, try the procedure below with a straight through Ethernet cable. If you find that it doesn't work, you may need to use one of the other methods previously mentioned to connect to the HMI.

In both cases, the procedure for setting up the AHF and your computer or laptop is the same. This procedure assumes a Windows 7 or Windows 10 operating system. For other operating systems, the procedure should be similar, and information on specific details can easily be found by doing an online search.



1. You could open the enclosure of the AHF and connect to the HMI via the top weatherproof connector as shown at the beginning of section 5.9. However, there is a preferred, alternative way to connect which can be done without opening the AHF enclosure. Remove the front cover on the HMI exposing the internal contents shown in the picture to the left. The Ethernet cable exposed is the connection between the HMI Ethernet and the weatherproof connector. Remove the cable from the RJ45 connector inside this cavity. Connect your Ethernet crossover or patch cable to the HMI via this RJ45 connector. Connect the other end of the cable to either your computer directly or to an Ethernet switch if using that method. Your computer should not be connected to any other network over Ethernet.

2. Open the ETHERNET INFO display from the MENU display. You will see the message "GETTING NETWORK INFO PLEASE WAIT…" for possibly up to 30 seconds as the AHF tries to find an IP address via DHCP. Ultimately this will fail and eventually a display will open showing NETWORK STATUS = DHCP ERR. See picture below.

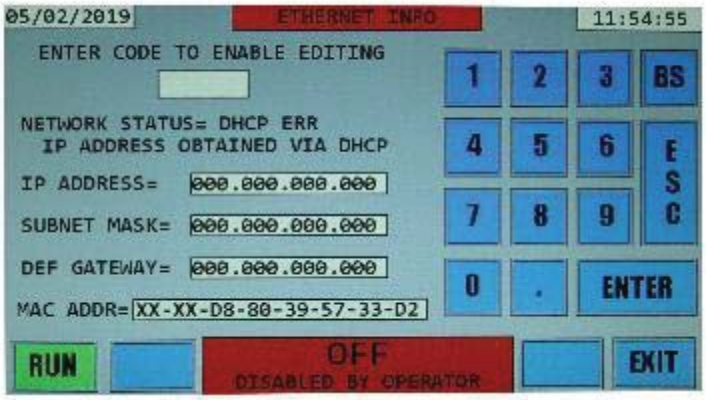

3. Now a static IP address needs to be entered. Please see section 5.9.1 for details on setting a static IP address. Note: If your IP address is already static, you would go through the procedure in section 5.9.2, but instead of pressing the Change to DHCP button, you would type in a new IP address as indicated in the next step.

4. Using the procedure in section 5.9.1, enter the IP address **192.168.000.002** and press Enter. Note that you will need to use the BS backspace key first to delete the leading 000.000.000 in the IP address box.

5. Now press the Subnet Mask button and using the BS backspace button on the keypad erase the current Subnet Mask, in our example 000.000.000.000.

6. Now using the keypad enter the following Subnet mask **255.255.255.000** and press Enter.

7. Don't worry about the Def Gateway. Now press the EXIT button.

8. As was described in section 5.9.1 you will see a display open up saying IP ADDRESS PARAMETER WAS CHANGED. SELECT OPTION BELOW. Press the SAVE CHANGES AND EXIT button.

9. Now to confirm that your IP Address has been correctly set, from the MENU display, go back to the ETHERNET INFO display. You should see something similar to the following picture:

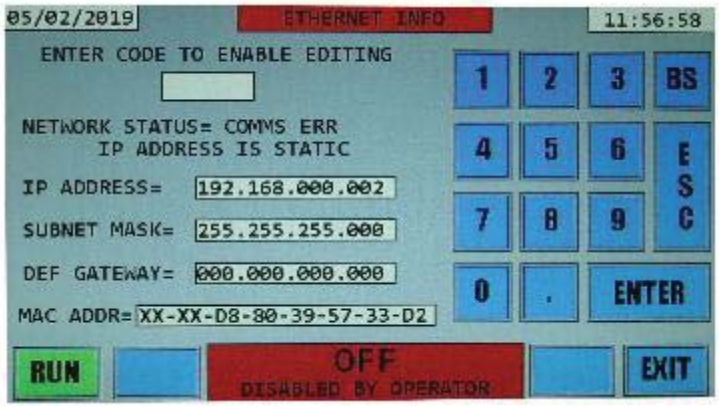

Note: you may get the “GETTING NETWORK INFO PLEASE WAIT…” message for a few seconds and NETWORK STATUS= COMMS OK may be displayed instead of COMMS ERR as in the above picture. That is okay. The important thing to confirm is that the IP Address and Subnet Mask have been set static and to the same numbers as in the picture above.

10. Now we will set a static IP address on your computer. This example uses the Windows 7 operating system, but the procedure for other Windows operating system versions also have a similar procedure for this.

11. Go to Control Panel\All Control Panel Items\Network and Sharing Center and click on Change adapter settings. You should see an icon for Local Area Connection or something similar for your Ethernet connection. Right click on this icon and go to Properties. You should see something similar to the following picture.

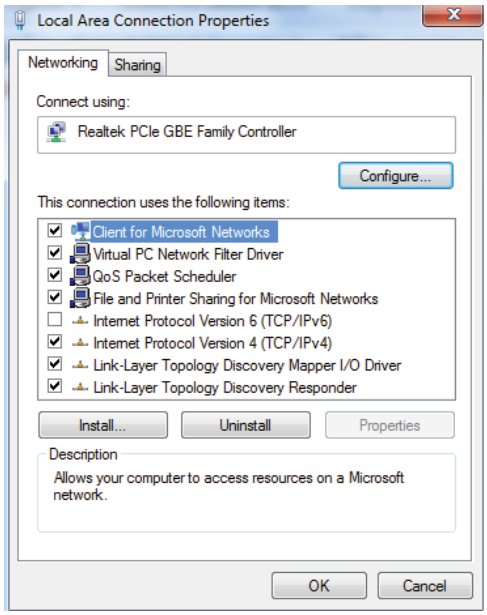

12. Double click on Internet Protocol Version 4 (TCP/IPv4). You should see something similar to the following picture.

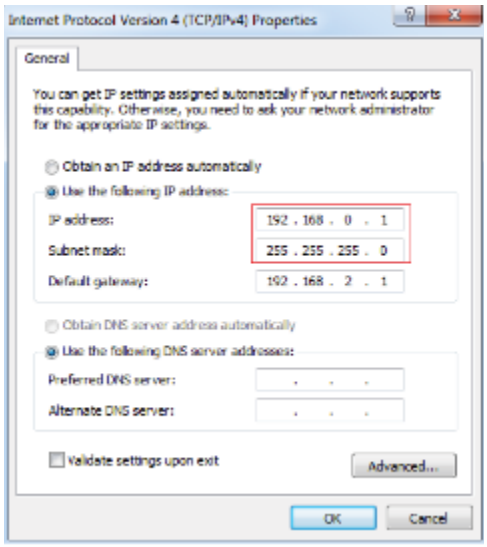

Select “Use the following IP address:” and type in 192.168.000.001 for the IP Address and 255.255.255.000 for the Subnet mask. It doesn’t matter what the Default Gateway is. These are circled red in the picture above.

Now click OK. If you get a Warning that the default gateway is not the same network segment message, ignore it. That is only important if you were connected to the network, and doesn’t apply when connecting the computer and AHF directly.

13. Now that your computer has an IP address, and the AHF has an IP address, you can communicate to the AHF from a terminal program. At this point if your computer has Auto-MDIX everything will work regardless of what type of Ethernet cable you have. If it doesn’t work, you may need a crossover cable or using an Ethernet switch with two normal Ethernet cables, one connecting to the HMI and the other connecting to the computer.

    In this example we will be using Tera Term. Section 6 of this manual has more information about choosing a terminal program. Set up Tera Term with the Ethernet settings as in the following picture.

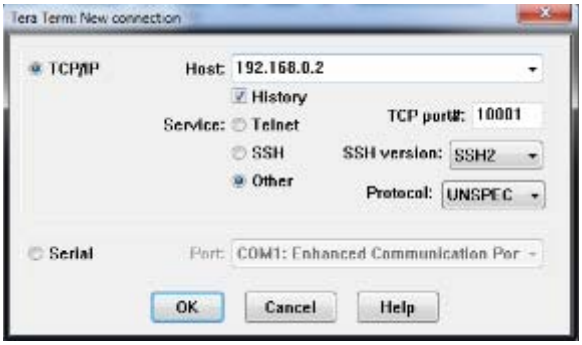

Note that the IP Address is 192.168.0.2. Tera Term will not connect if you include the leading zeros in the IP Address. Also, note that this is the IP Address that we set in the HMI in step 4. The TCP port is 10001. If you click OK, and then press the Enter key, you should see > prompt symbols. Type s and press Enter. You should see the system status information. This verifies that the HMI is communicating with your computer.

5.9.4 “ETHERNET/IP OR MODBUS TCP INFO” DISPLAY

Systems equipped with ETHERNET/IP or MODBUS TCP capability have this information display to be able to show the present IP Address and other network related information, and to set a static IP Address so that a PLC or HMI can be programmed with this IP address and automatically connect to the HMI.

Note: Systems without ETHERNET/IP or MODBUS TCP capability will show INDUSTRIAL NETWORK on the MENU display and the button will be gray to indicate that it is disabled.

The ETHERNET/IP or MODBUS TCP INFO display is identical to the ETHERNET INFO display described earlier in this section. The only difference is the IP Address and other network information is shown for the HMS Anybus Industrial Network module in the HMI. Please refer to the Ethernet display details described earlier in this section on how to use this display, and to section 7 for details about setting up ETHERNET/IP and MODBUS TCP.

5.10 “WAVEFORMS” DISPLAY

The Waveforms display allows the operator to view a single AC line period of multiple AHF voltage and current parameters. This provides useful diagnostic information about the status of the system without needing to connect an oscilloscope.

After opening the WAVEFORMS display from the MENU, the operator is presented with the WAVEFORMS SETUP screen as can be seen in the picture below.

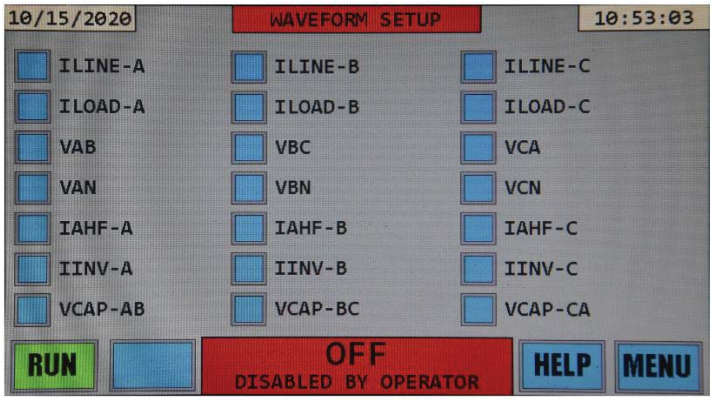

There are 21 parameters which can be viewed. There are 7 rows, each row showing the parameters for phases A,B,C.

ILINE-A,B,C: The line current is the current measured coming from the utility. When the AHF is operating, this current represents the corrected current. Since the AHF supplies the harmonic currents to the load when the AHF is operating, these harmonic currents no longer come from the line (utility), so the harmonic content of these line currents will be greatly reduced. When the AHF is not operating, these “line currents” will essentially be equal to the “load currents”.

ILOAD-A,B,C: The load current is the current measured going to the loads (motor drives, etc.). The load will draw harmonic currents whether the AHF is on or off, so the “load currents” will have harmonics present when the load is operating.

VAB,VBC,VCA: These are the line-to-line voltages for all 3 phases.

VAN,VBN,VCN: These are the equivalent line-to-neutral voltages for all 3 phases. They are derived from the line-to-line voltages. Displaying a line-to-neutral voltage and corresponding line or load current will show the linear phase displacement.

IAHF-A,B,C: This is the current drawn by the AHF (both harmonics and out-of-phase linear current). They represent those drawn by the load that are being “cancelled”, so that the current does not have to come from the line (or utility).

IINV-A,B,C: The inverter currents are very similar to the AHF currents except they include the switching currents. These are currents related to the inverter switching frequency that are internally filtered so do not appear in the AHF currents. At higher AHF current levels, switching currents make up a small percentage of the overall current, so IAHF and IINV will be about the same. At lower AHF current levels, the switching currents make up a much higher percentage of the overall current, so IINV currents will be several amps higher than the IAHF.

VCAP-AB,BC,CA: These are internal line-to-line voltages which are primarily used for diagnostic purposes. When the AHF is fully operational, they are identical to VAB, VBC, and VCA, respectively. When the AHF is not fully operational, they will display different waveforms, which can be interpreted by a trained technician.

One to three waveforms can be viewed at the same time. To select a parameter, press the blue button to the left of each parameter. The button will turn from blue to black to indicate that the parameter has been selected. To unselect a parameter, press the black button to turn it back to blue. If at least one parameter is selected, the DONE button appears. When finished selecting parameters, press the DONE button. Pressing the HELP button gives a short summary of the same information found in this manual. The picture below shows ILINE-A, ILOAD-A, and VAN selected.

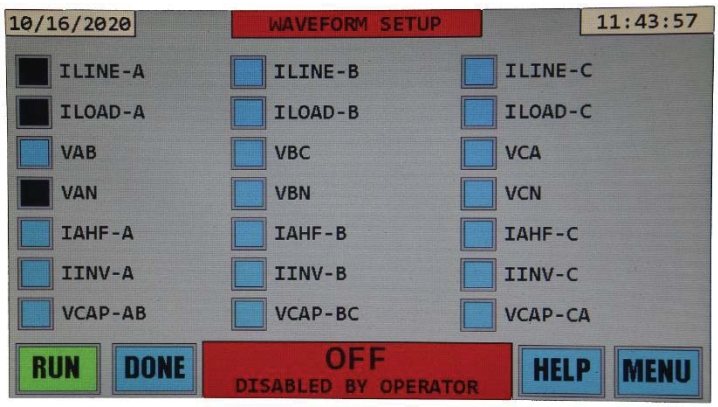

After pressing the DONE button, the AHF acquires a single capture of the requested waveforms and displays them on the screen. The picture below shows the waveforms ILINE-A, ILOAD-A, and VAN which were previously selected.

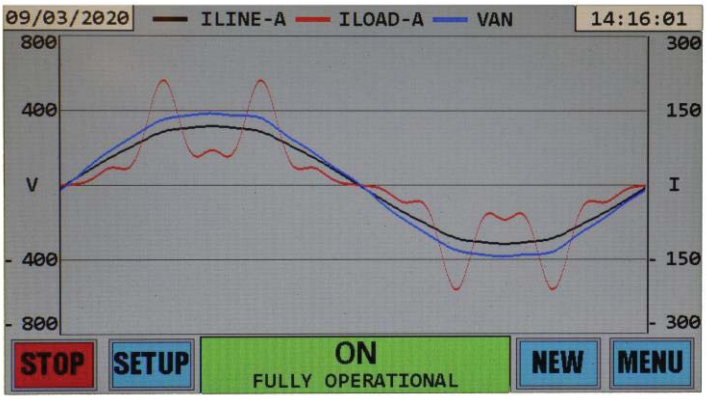

The three multicolored bars to the left of the waveform titles show what color is used to display each waveform. There are two separate grids, one for the voltages on the left with the letter V representing 0 volts, and one for the currents on the right with the letter I representing 0 amps. If only voltages are displayed, the grid on the right would not be displayed. Likewise, if only currents are displayed, the grid on the left would not be displayed.

The positive and negative maximum amplitudes in the grid are automatically determined by the AHF based on the largest amplitude measured out of all the displayed waveforms. The waveforms are automatically scaled to fit the grid and display a single AC line period.

The load current consists of the fundamental plus harmonic current. The fundamental current is a sine-wave at the same frequency as the voltage. The harmonic current is an undesirable distortion drawn by the load that does not contribute to the “work” of the load. These harmonic currents cause the load current to be distorted as shown in this example. The AHF draws harmonic currents equal to but opposite in phase to those drawn by the load. This results in the AHF essentially “cancelling” or “filtering” out these harmonic currents so that the line no longer has to supply them; therefore, the line current (as shown) approaches a pure sine-wave. In this example, the resultant line current is in phase

with the line to neutral voltage for that phase; however, depending on the characteristics of the load and if the AHF is not set up to correct linear phase displacement, there may be a phase shift between the line-to-neutral voltage and the associated line current.

Pressing the SETUP button returns to the Waveform Setup page and allows the operator to select different waveforms. Pressing the MENU button exits to the MENU screen. Pressing the NEW button requests another single capture of the waveforms.

Pressing and holding the NEW button for at least 2 seconds will enter continuous capture mode, where a new capture of the waveforms will be automatically updated and displayed on the screen three times per second. When the NEW button was pressed long enough to enter continuous capture mode, the text on the button will change from NEW to STOP CONT. At that point, letting go of the button will begin automatically refreshing the waveforms. To go back to single capture mode, press STOP CONT, and the button text will change back to NEW.

The picture below shows two waveforms in continuous mode. Note that the NEW button has changed to STOP CONT. Also note that only currents are displayed, therefore the voltage grid on the left is not displayed. Also the blue bar at the top has no title to the right of it, indicating that no third waveform is displayed.

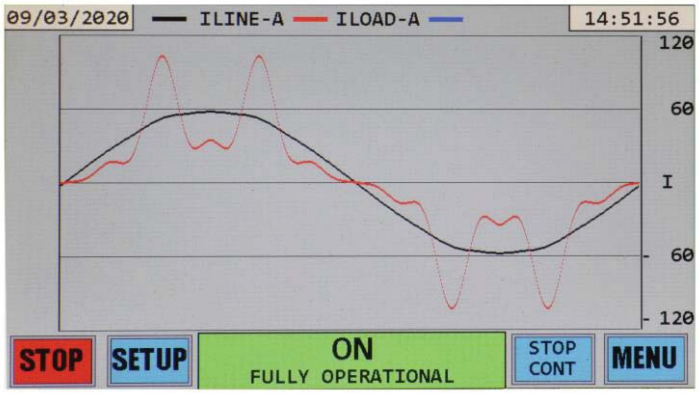

5.11 “DIAGNOSTICS” DISPLAY

The DIAGNOSTICS display is similar to the MENU display and contains multiple buttons which open various Diagnostic sub-displays. DIAGNOSTICS DATA currently just shows the HMI reset reason. This is useful for troubleshooting. This feature is still being developed, and will have other functionality in a future firmware update. UPDATE FIRMWARE is used to update both the HMI and AHF firmware as described in section 5.11.1. SYSTEM TEST is a gray button which indicates that it is currently disabled. This is a future feature that will allow to system tests to be performed to assist in troubleshooting. It will be available in a future firmware update. The buttons without text are empty spaces for future Diagnostic displays. An example of a DIAGNOSTICS display follows:

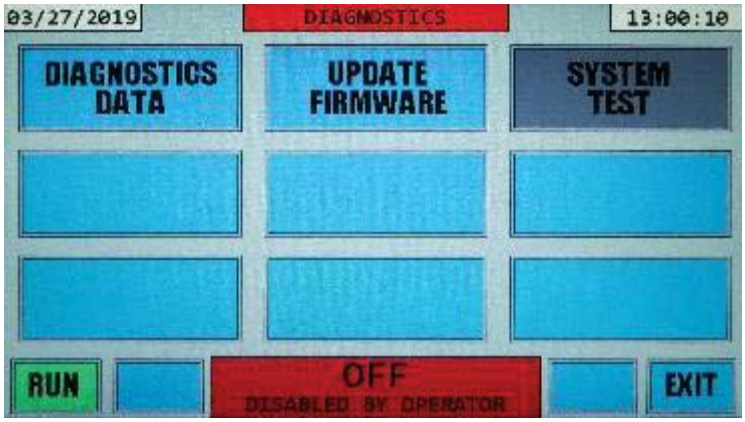

5.11.1 "UPDATE FIRMWARE" DISPLAY

The UPDATE FIRMWARE display allows the operator to update the AHF firmware with new features, upgrades, and bug fixes, by simply plugging in a USB flash drive, and pressing a few buttons on the screen. The firmware update process is intuitive, simple, and takes only a few minutes. This section will describe how to update the AHF firmware.

On the MENU display, open the DIAGNOSTICS display by pressing the DIAGNOSTICS button. Then from the DIAGNOSTICS display, press the UPDATE FIRMWARE button. The following display will open. See the following picture.



To Update the AHF Firmware, please perform the following steps:

1. Obtain a USB flash drive (2GB or larger, most modern flash drives fit this requirement). Upload the new firmware on the flash drive. The factory will provide you with the new firmware files. These files will have the format hmixxxxx.bin or dspxxxxx.bin where xxxxx is a 5-digit version number of the firmware.

   Important: These files **MUST** be in the root directory of the flash drive, otherwise the system will not detect them.

2. Plug a USB flash drive into the USB port in the HMI. The flash drive USB port is located under the protective cover to the right of the LCD screen on the front panel of the HMI. Refer to section 3.5.6 on opening the cover and locating the USB port.

3. Enter the code REDACTED using the keypad and press Enter. Use the backspace "BS" button to erase incorrectly entered characters. A message will briefly appear saying "USB ENUMERATION IN PROGRESS PLEASE WAIT". If the flash drive is not already plugged in as you enter the code, the message "PLEASE CONNECT A USB FLASH DRIVE" will appear. Simply plug the flash drive into the USB port.

After USB Enumeration is complete, you will see USB related information displayed, such as the Vendor ID, Product ID, Manufacturer, Product, and etc. If you multiply the Logical Block Address by the Block Length, you will get the flash drive size in bytes. This information will be specific to your flash drive. This information may be useful in troubleshooting any potential USB issues.

Most importantly, successful USB enumeration indicates that the USB flash drive was successfully read by the AHF. If for some reason USB enumeration fails, the system may automatically reset to try and fix the issue. The most common cause of this is a flash drive which was not pushed in all the way into the USB port. Disconnect, and reconnect the flash drive and try again. See section 9 Troubleshooting for more information. Please see the following picture for an example of the USB enumeration information you will see.

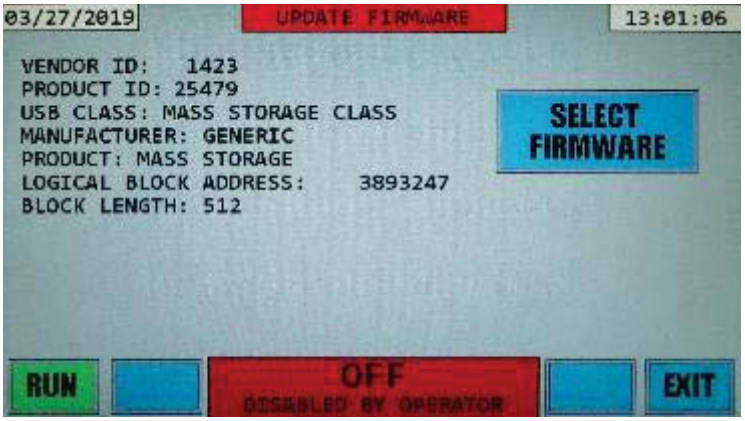

4. Press the SELECT FIRMWARE button. The following screen will open. See picture below.

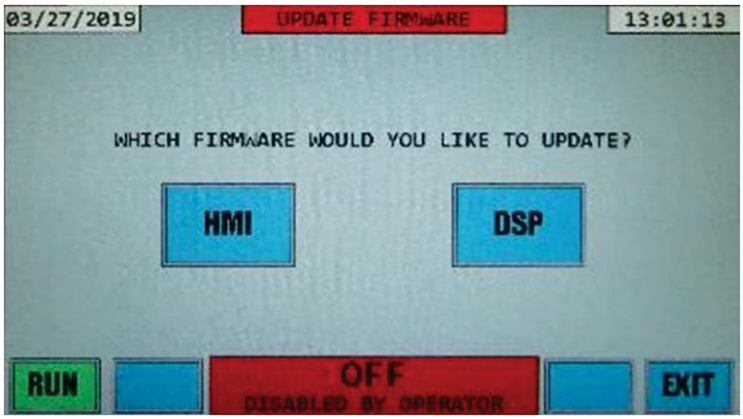

5. The factory will inform you if you need to update the HMI or DSP firmware. Press the appropriate button HMI or DSP. In our example we will press the HMI button. The following screen will open. See picture below.

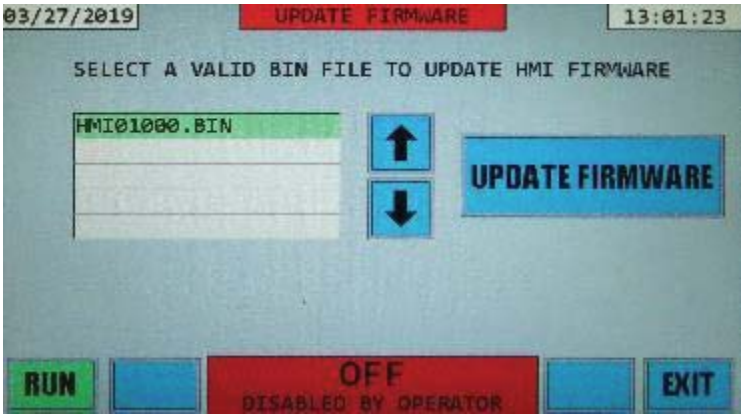

6. You should see the message SELECT A VALID BIN FILE TO UPDATE HMI FIRMWARE, and a table with 5 rows. These rows show the valid HMI firmware files located in the root directory of your flash drive, up to 5 files. This will not show the other files on your flash drive, only the files in the format hmixxxxx.bin. If you pressed the DSP button, the same would be true except only files called dspxxxxx.bin would be visible. In our example, you can see the file HMI01000.BIN displayed and 4 empty rows. This means that it's the only valid HMI firmware file found on the flash drive. Use the arrows to select the firmware file as instructed by the factory

   Before pressing UPDATE FIRMWARE, make sure that the unit is disabled by pressing the red STOP button on the lower left of the display if the unit is currently enabled. If the unit is disabled, you will see a green RUN button as in the preceding picture of a display . If you try to press UPDATE FIRMWARE while the unit is operating, you will see a red warning message YOU MUST DISABLE UNIT BEFORE UPDATING FIRMWARE displayed on the screen. See section 5.12 for more information on how to disable the unit using the STOP button.

   Press the UPDATE FIRMWARE button. A new screen will open. See the following picture.

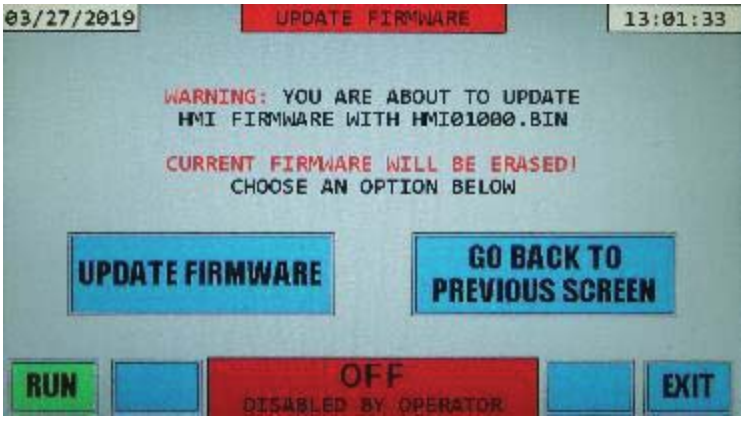

   This screen gives a warning that you are about to erase the current HMI firmware and replace it with HMI01000.BIN and gives you a choice to proceed by pressing the UPDATE FIRMWARE button, or to go back and select another file by pressing GO BACK TO PREVIOUS SCREEN. You can also press EXIT to go back to the DIAGNOSTICS display.

7. Now you will update the HMI firmware. It's very important to make sure that the correct file is selected as instructed by the factory and that the flash drive is NOT removed after you press UPDATE FIRMWARE. If the flash drive is accidentally removed, this will NOT corrupt the AHF firmware, however it may corrupt the flash drive. Please see the troubleshooting section 9 for more information on what will happen if the flash drive is accidentally unplugged, and how to fix this issue.

8. Press UPDATE FIRMWARE. The HMI firmware will now begin being updated. A Blue screen will open up saying UPLOADING NEW HMI FIRMWARE. PLEASE WAIT UP TO 10 SECONDS. UNIT WILL AUTOMATICALLY RESET. See the picture below.



9. After the firmware is updated, the unit will automatically reset and the splash screen with the logo will appear. At the bottom of the splash screen you will see a message saying HMI UPDATED TO FIRMWARE VERSION XXX.XXX where XXX are numbers 0-9. Seeing this message verifies that the firmware was updated correctly. See picture below.



As an additional verification you can open the CONFIGURATION PARAMETERS DISPLAY as described in section 5.6.3 and verify that the HMI Software version matches the version number of the file. In our example we updated the HMI firmware with HMI01000.BIN, and in the CONFIGURATION PARAMETERS display the HMI Software Version is 001.000. See picture below.

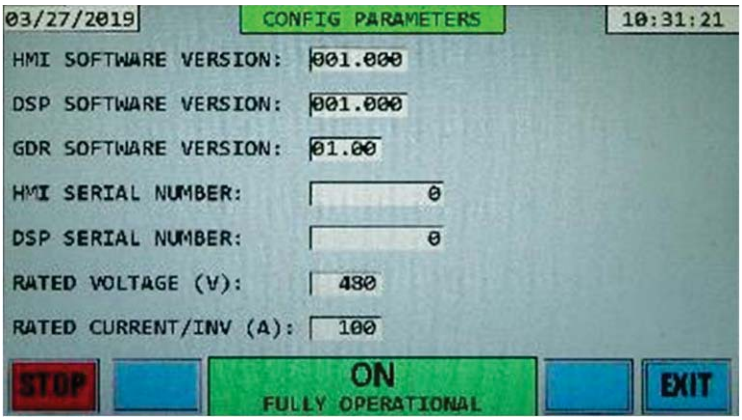

5.12 ENABLING OR DISABLING THE AHF USING THE RUN OR STOP BUTTONS

The system can be enabled or disabled by pressing the “RUN” or “STOP” buttons located in the bottom left corner of the “Status” section on the touch screen. All screens will have one of these buttons. If the system is presently disabled, the green “RUN” button will be present on the screen. The operator can enable the system by pressing this “RUN” button. The following “confirmation” display will appear once the “RUN” button is pressed:

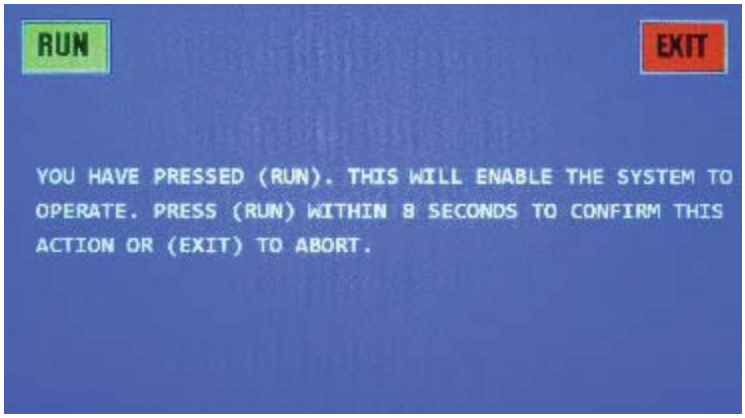

The green “RUN” button on this display will have to be pressed before the 10 second timer on this display expires, for the system to become enabled. Pressing the “EXIT” button on this display will result in immediately going back to the previous display without enabling the system. Once a system is enabled, a red “STOP” button will appear on all “Status” sections of displays in place of the green “RUN” button. Enabling a system does not necessarily result in a system running. There may be other conditions that prevent a unit from running.

If the system is presently enabled, the red “STOP” button will be present in the lower left corner of “Status” section of all displays. The system may not necessarily be running (“ON” status), as some condition may be keeping the system from running. The following “confirmation” display will appear once the red “STOP” button is pressed:

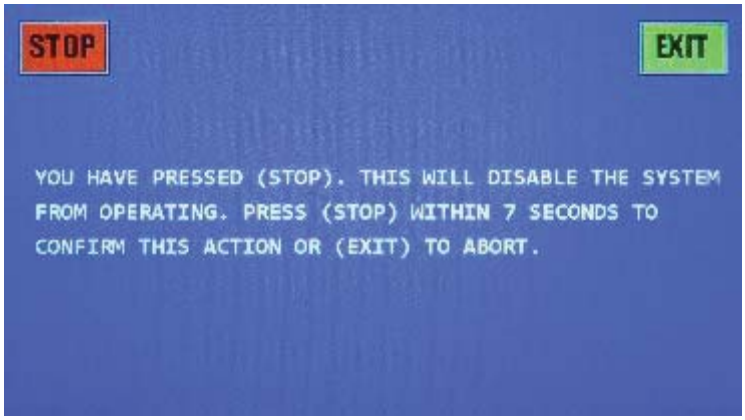

The red “STOP” button on this display will have to be pressed before the 10 second timer on this display expires, for the system to become disabled. Pressing the “EXIT” button on this display will result in immediately going back to the previous display without disabling the system. Once a system is disabled, a green “RUN” button will appear on all “Status” sections of displays in place of the red “STOP” button. Disabling a system will immediately stop a system from running.

5.13 FRONT PANEL STATUS LEDS

The AHF has 3 LEDs located on the front panel HMI to the left of the LCD touchscreen. These LEDs are: Power, Control Status, and Power Status. These LEDs are used to indicate the status of the system. The

picture below shows a front panel with the unit disabled. Note the LED colors in the case where the unit is disabled.

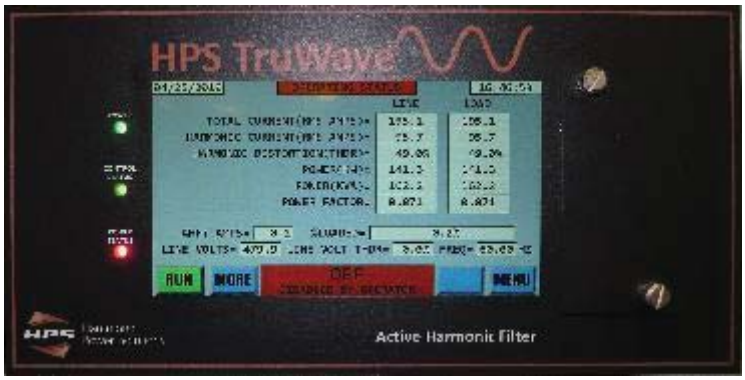

The Power LED is on and green when the HMI module has power. It is off when the HMI module does not have power. If you are having problems with the Front Panel LCD turning on, make sure that the Power LED is on, if not there is likely an issue with power going to the HMI Front Panel.

The Control Status LED indicates the status of the HMI onboard processor. If this LED is green, the processor is running correctly, if this LED is red, the processor is having problems, contact the factory.

The Power Status LED indicates the operational status power output (Harmonic current correction and/or Linear power factor correction) of the system.

If the Power Status LED is green, the system is operating correctly and can be in the following states: ON, ON MAX LOAD, PRECHARGING, STARTING, WAITING, IDLE.

If the Power Status LED is red, the power output of the system is OFF and not correcting harmonics or power factor.

If the Power Status LED is yellow the system is in one of the following states: ON MAX LOAD, INVERTER TEST, THYRISTOR TEST, CONTACTOR TEST, VDC TEST.

ON MAX LOAD means the system is running, but is at maximum output. The load is requiring more harmonic and/or linear current correction than the unit is rated for.

Note that for the Power Status LED, the colors are the same as the colors of the top and bottom status sections of every display on the LCD screen. In the picture above, the system is off and the Power Status LED is red, and in addition the status sections on the Operating Status display are red.

6. ETHERNET COMMUNICATIONS

An Ethernet communications interface is provided on the AHF to allow the unit to be configured and data collected from the unit. The Ethernet interface is capable of 10/100 Mbps and uses the TCP/IP protocol.

6.1 USING THE ETHERNET COMMUNICATIONS INTERFACE

The Ethernet port is located on the back of the HMI front panel assembly on the right side when looking at the back of the front panel. It's the top weatherproof connector. See picture below. The Ethernet port is circled in red. There is a blue Ethernet Cat 5 cable connected to the port in the picture.

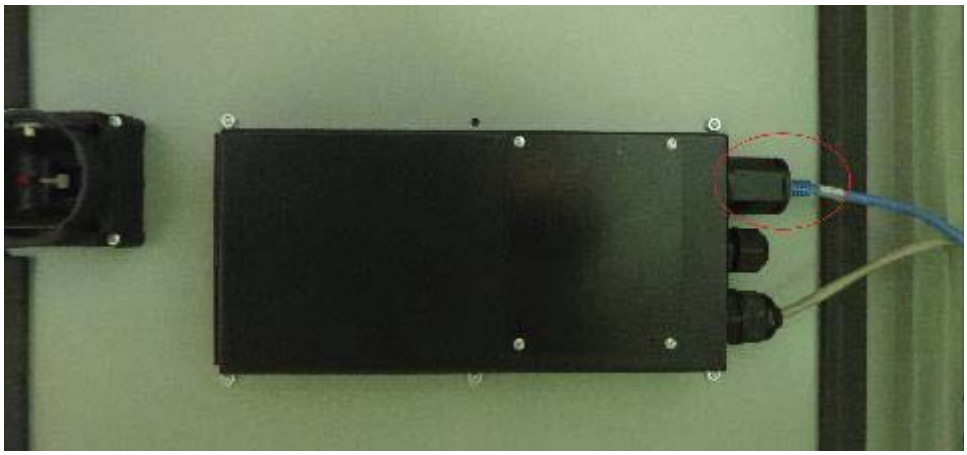

Connect one end of an Ethernet patch cable to the Ethernet port on the HMI, and the other end either to a switch connected to your network (see section 5.9 on how to set up the Ethernet port to communicate on your network).

Note: You can also connect to the Ethernet port on the HMI directly to a computer or laptop. See section 5.9.3 of this manual for important information regarding how to do this.

One can communicate with the HMI over the network using a terminal program. One such terminal program on many Windows based computers is Hyperterminal. Unfortunately, WindowsXP was the last Windows operating system that this terminal program was provided free with the operating system. Other free, open source terminal programs exist that can be downloaded for free over the internet. One such program that works quite well is Tera Term. After obtaining a suitable terminal program, you will need to set it up with the proper signaling protocol that follows in order to communicate with the AHF:

Set up Hyperterminal properties to "Connect using" TCP/IP. Input the IP address for the AHF as the "Host Address" (format xxx.xxx.xxx.xxx where you put in the actual IP address in place of the x's – e.g. 192.168.10.20). Finally, input 10001 as the port address. For using Tera Term, consult the same documentation cited earlier for installing/configuring Tera Term.

Once the connection is made between the equipment and the terminal, the AHF (and hence the HMI) is powered, and your computer is running a terminal program, you should see the message "RESET HMI" followed by the prompt character >. Press the <Esc> key on your computer a few times. The monitor of the terminal should display "<Esc>"every time you press the <Esc> key. If not, recheck your wiring and protocol setup. Note: For Tera Term you will have to press Enter every time after pressing the <Esc> key.

6.2 ETHERNET COMMUNICATIONS COMMANDS

Once you receive the prompt character ">", you may enter a command to obtain information that you desire from the unit. Each command begins with a letter followed by additional parameter characters,

terminated with the **<Enter>** key. Either upper or lower case characters may be used as the interface is not case-sensitive. The following keyboard keys have special meaning:

<Esc> The escape key can be pressed at any time to abort any command. After pressing the escape key, the unit will display **<ESC>** to indicate such a key was pressed followed by a new ">" prompt. At such a time a new command can be entered. Note: For Tera Term you will have to press Enter every time after pressing the <Esc> key.

<Enter> The “Enter” key is pressed to send the command to the AHF. Up until the “Enter” key is pressed, the command may be typed and altered using the “Backspace” key. No action will be taken by the AHF on the command until the “Enter” key is pressed.

Commands begin with a letter, with the most commonly used summarized in Table 6.1. Additional information about these commands appears in subsequent sections. In the format for these commands, items contained within brackets “[“ and “]” are optional parameters that may be entered. A value “n” is a one digit number and “nn” is a one or two digit number. “hh”, “mm”, and “ss” are two digit numbers for hours (00-23), minutes (00-59), and seconds (00-59). “mm”, “dd”, and “yy” are two digit numbers for month (01-12), day (00-31), and year (00-99). On-line command help is available. A **?** command entered will display the list of available command letters. The command letter listed followed by a **?** will display information about that command. For example sending a **?** command will display:

```
AVAILABLE COMMANDS:

A, B, G, H, K, O, Q, S, T, V, Z
```

Following this up by sending an **A?** command results in the following on-line information being displayed about command(s) that begin with the letter A:

```
(A)CEN/(A)CDIS command. Enables/Disables the AHF.
 Command format is:
 >ACEN
     Enables the AHF.
 >ACDIS
     Disables the AHF.
```

Table 6.1: Serial Communications Commands

Command	Format	Function
A	ACEN or ACDIS	Enables or disables operation of the unit
H	HO[nn][-[mm]][,v] or HR[nn][-[mm]]	HO is the “on/off” history HR is the “reset” history
K	KSET	Displays programmable parameter values
O	OPT	Displays firmware version and system options configuration
Q	QOFF	Displays measured DC content in several monitored parameters
S	S[x]	Status display. Displays operational values.

T	TI or TT=hh:mm[:ss] or TD=mm/dd/yy	TI displays current date and time. TT sets time. TD sets date.
V	V[x]	Similar to S command, but continuously displays values until **<Esc>** key is pressed.
Z	ZCAL	Displays readings of parameters measured by the system.
?	?	Displays list of available command letters

6.2.1 "A" ACEN/ACDIS COMMAND

Sending the ACEN command is identical to pressing the "RUN" button on the LCD touchscreen display. If other operating conditions are OK for the system to operate, sending the ACEN command will allow the system to start operating. Sending the ACDIS command is identical to pressing the "STOP" button on the LCD touchscreen display. If the system was operating, ACDIS will shut it down and the system will not run again until either the ACEN command is sent or the "RUN" button on the LCD touchscreen display is pressed. The last entered command is" remembered" through power off/power on cycles. If an ACDIS command was last sent or "STOP" button was last pressed prior to removing power to the unit (by either turning off the front power switch or loss of utility power), the next time power is reapplied to the unit, the unit will stay in the disabled state and will not operate until enabled. If an ACEN command was last sent or "RUN" button was last pushed prior to removing power to the unit, the next time power is reapplied to the unit, the unit will be in the enabled state and will operate if all other conditions are OK for the system to operate.

6.2.2 "HF" HISTORY FDR COMMAND

This is a troubleshooting tool that you may be instructed to perform by a factory representative should you be experiencing a possible problem. This displays the same information as the HISTORY FDR display in section 5.8.4. If for some reason the method of saving an FDR via the USB flash drive as described in section 5.8.4 fails, you may need to use this Ethernet command instead.

6.2.3 "H" HISTORICAL EVENT DATABASE DISPLAY COMMAND

The AHF provides two event historical databases – an "On/Off" and a "Reset" database. Records of both the databases are numbered starting with 1. Up to 480 "On/Off" events and 1856 "Reset" events are stored. Once the limit is reached, the oldest event is discarded to make room for the newest event. The events are numbered with 1 being the most recent event, followed sequentially by earlier recorded events. These recorded events are saved in battery backed up memory, so loss of power to the unit will not result in any events being lost.

6.2.3.1 "HO" HISTORICAL ON/OFF EVENT DATABASE DISPLAY COMMAND

The first of these databases contains the date and time the system starts operating (correcting harmonics, etc.) and stops operating. The reason for a unit to stop operating could be intentional (system is disabled) caused by an operator pressing the STOP button on the front panel LCD display, by an operator issuing an ACDIS command over the communications connection, or by receiving an external disable signal (if that feature is activated). The reason for a unit to stop operating could be due to an unavoidable external condition such as loss of utility voltage (or dropping out of tolerance) either due to unit being powered off via the front power switch or a utility interruption. The reason for a shutdown could be due to a temporary condition that the unit was unable to deal with requiring the unit to shut down and restart, such as a hardware current trip. Also, the reason could be due to a problem such as over-temperature (dirty filter or inoperable fan) or internal problem detected. Each time the AHF's power inverter shuts down, a snapshot of several operating parameters (voltages, currents, temperature, etc.) are saved along with the reason for the shutdown. The last 480 "on-off" events are stored in non-volatile flash memory inside

the AHF on the DSP Control board (PC-C), thus this information is preserved even when the unit is totally powered down.

The information in this database may be viewed by using the “HO” command issued over the Ethernet interface. The full format of the command is **HO[nn][-[mm]][,v]** where: nn and mm are on/off record event numbers. The best way to understand the format of this command is through examples.

In the following examples nn=10 and mm=20:

HO displays newest (or latest) record.

HO10 displays 10th newest record.

HO- displays all records from newest to oldest.

HO-10 displays all records from newest to 10th newest.

HO10-20 displays all records from 10th newest to 20th newest.

HO10- displays all records from 10th newest to oldest

The optional “**,V**” attribute may be added to the command to display the “verbose” data. Without the “**,V**” suffix added, only the date and time for when the system started and stopped, and the reason for the system stopping will be displayed. Adding the “**,V**” suffix results in all of the parameters saved at the time of the shutdown to be displayed as well.

For example entering HO-3 would produce something similar to the following.

```
OPERATIONAL HOURS =        20, ON/OFF EVENTS = 58
  1.       58 04/02/19 16:00:46.40 - 04/02/19 16:12:34.74
     OFF BECAUSE:DISABLED BY OPERATOR
  2.       57 03/29/19 15:32:19.78 - 03/29/19 17:42:04.61
     OFF BECAUSE:DISABLED BY OPERATOR
  3.       56 03/26/19 14:14:08.56 - 03/26/19 14:15:23.47
     OFF BECAUSE:DISABLED BY OPERATOR
```

This shows the 3 newest (or latest) events. It begins with the number of OPERATIONAL HOURS. This is a tally of the cumulative number of hours the AHF has been operating (producing correction current, not just powered up). ON/OFF EVENTS indicates the number of ON/OFF events that have been recorded. Once the maximum of 480 is reached, the oldest records are discarded as new events occur, resulting in the newest 480 events being kept.

This is followed by two lines of data for each stored event. The first line contains the internal data base number, the date and time the unit started operating, followed by the date and time the unit shut down. The second line indicates the reason the unit shut down. The time that the unit ran last (in record 1) was 11 minutes, 48.34 seconds (04/02/19 16:12:34.74 minus 04/02/19 16:00:46.40) before an operator disabled the system by either sending an ACDIS command over the communications interface or pressing the STOP button on the LCD touchscreen.

Prior to this event, event 2 indicates the unit ran for 2 hours, 9 minutes, 45 seconds, again being shut down by an operator. In between events 2 and 1, the unit stayed off for 4 days 40 minutes,14.96 seconds. (04/02/19 16:12:34.74 minus 03/29/19 15:32:19.78).

An example of a stored event recalled with the “**,V**” option follows:

```
   OPERATIONAL HOURS =      2176, ON/OFF EVENTS =255
1.      255 04/30/19 12:00:43.33 - 04/30/19 12:01:25.47
   OFF BECAUSE:DISABLED BY OPERATOR
VLINE: RMS=479.8/479.8/479.8    INST= 566.7/  39.7/-606.6
ILINE: RMS= 85.0/ 85.0/ 85.0    INST= 118.7/ -54.4/ -64.2
ILOAD: RMS= 97.5/ 97.5/ 97.5    INST=  68.4/ -34.2/ -34.2
IAHF : RMS= 46.4/ 46.4/ 46.4    INST=  50.2/ -20.2/ -30.1
IINV : RMS= 46.4/ 46.5/ 46.4    INST=  49.3/ -18.3/ -31.0
IAHF-HF   =  1.7/  1.7/  1.7    IAHF-DC=  0.0/  0.0/  0.0
VLINE-HARM=  0.1/  0.1/  0.1    IAHF-INV=  0.9/  1.9/  0.9
ILINE-HARM=  1.4/  1.4/  1.4 ILOAD-HARM= 47.8/ 47.8/ 47.8
LINEKW/KVA= 70.6/ 70.6/ .999 LOADKW/KVA= 70.6/ 81.1/ .871
VDC:DES=821.3 ACT=821.3 LO+HI=410.7+410.7/410.7+410.7FILT
LINE FREQ=60.00 TEMPS: DSP= 28, GDR= 28, HS1= 41, HS2= 42
VDC START=694.1 PCTIME= 0.955 MAX AMPS= 1.3 AVG AMPS= 1.2
```

Following the OPERATIONAL HOURS and ON/OFF EVENTS header line will be the verbose records of all ON/OFF events asked for. Each event will have 14 lines of information about that event. The first 2 lines are identical to the lines displayed with the non-verbose option. The “extra” 12 lines contain operational information at the time the unit shut down. A detailed explanation of this data can be found in section 5.8.2. All of the information in the HO command can also be viewed in the HISTORY ON/OFF display described in sections 5.8.1 and 5.8.2.

6.2.3.2 “HR” HISTORICAL RESET EVENT DATABASE DISPLAY COMMAND

A second database contains information about each time the AHF DSP Control is reset. Information recorded includes date and time when the event occurred and the cause of the reset. A reset occurs every time power is applied to the unit; therefore, most resets that appear in this data base will be “POWER-UP” resets. However, the appearance of abnormal resets may be useful in diagnosing a possible problem. The last 1856 “Reset” events are stored in non-volatile flash memory.

To obtain “Reset” records over the Ethernet communications interface, use the following command format:

HR[nn][-[mm]]

where: nn and mm are reset record event numbers

See the following examples where nn=10 and mm=20:

HR displays newest (or latest) record.

HR10 displays 10th newest record.

HR- displays all records from newest to oldest.

HR-10 displays all records from newest to 10th newest.

HR10-20 displays all records from 10th newest to 20th newest.

HR10- displays all records from 10th newest to oldest

The command **HR-3** would result in information similar to the following being displayed:

```
         OPERATIONAL HOURS =        20, RESET EVENTS =  55
   1.        55 04/02/19 13:11:30.31
      RESET BECAUSE:POWER-UP
```

```
2.        54 03/29/19 10:48:53.89
   RESET BECAUSE:POWER-UP
3.        53 03/26/19 13:31:35.84
   RESET BECAUSE:POWER-UP
```

Similar to the HO command, the AHF operational hours are display, along with the number of reset events stored in the database (maximum 1856). This is followed by the reset events starting from the newest (or latest) event first. This is followed by the internal database number and the time and date the unit reset, followed by the reset cause on the next line.

All of the information in the HR command can also be viewed in the HISTORY RESET display described in section 5.8.3.

6.2.4 "K" KSET (SYSTEM OPERATING PARAMETERS) SERIAL COMMAND

The AHF has several customer accessible parameters that can be altered in the field. These parameters may have to be altered to adapt your system to your particular application. These changes can be made either using the LCD front panel touchscreen "VIEW/SET PARAMETERS" displays or over the communications link using the **KSET** command. Typing in the **KSET** command will result in information similar to the following list being displayed:

```
CUSTOMER SETUP CONFIGURATION

CT CURRENT RATIO (N:5):                                  2000
CT PLACEMENT (LINE OR LOAD):                             LINE
NUMBER OF CTS (2 OR 3):                                     2
%LOAD TO BE CORRECTED BY THIS UNIT:                       100
%THDR GOAL TO BE ACHIEVED BY THIS UNIT:                     3
POWER FACTOR GOAL TO BE ACHIEVED BY THIS UNIT:           0.82
CURRENT LIMIT % OF RATING:                                100
CURRENT LIMIT (1 PHASE % OF TOTAL RATING):                104
UNIT DISABLED IF LOAD POWER BELOW THIS %:                   0
THDR OR THDF DISPLAYED:                                  THDR
DISPLAY FILTERING (0-100 = MIN-MAX):                       50
HARMONIC CALC FILTERING (0-100 = MIN-MAX):                 20
UNIT WILL NOT START IF LOAD PF LESS THAN:                0.65
EXTERNAL ENABLE INPUT:                                NOT USED
ETHERNET/IP EXT ENABLE INPUT:                         NOT USED
```

Changing these parameters is password protected to prevent unauthorized personnel from making changes. In order to change the customer accessible parameters under the Customer Setup Configuration you must perform the following numbered steps listed below. The **<enter>** designation is instructing you to hit the enter key. You may type either capital letters or lower case letters, the system is not sensitive to the case used. If you make a mistake during this procedure, you may hit the **<Esc>** key on your computer's keyboard to abort the procedure. Aborting the procedure will result in no changes to any of the parameters being saved as no changes are actually implemented until you go through all of the parameters and exit the procedure normally (indicated by the **>** prompt once again being displayed).

Note: The first three parameters (all having to do with the CT setup) listed in the Customer Setup Configuration cannot be changed unless the AHF is disabled either via the ACDIS command over the communications link or by pressing the "STOP" button on the LCD display. Also, if the LCD display is presently in the "VIEW/SET PARAMETERS" screens, the KSET

command will not allowed and if in the KSET;CH command, the "VIEW/SET PARAMETERS" LCD screen will not be allowed.

1. Type **DCS <enter>**
2. System should respond with "ACCESS OK"
3. Type **KSET;CH <enter>**
4. System should respond with "CUSTOMER SETUP CONFIGURATION:" and then start listing each customer accessible parameter individually followed by the question "ADJUST (Y/N)?"
5. Type **N<enter>**until you reach the parameter you want to change
6. When you have reached the parameter you want to change type **Y<enter>**
7. If there are only two available choices for this parameter, the system will change the parameter and move on to the next line. If there are more than two choices for a parameter, the system will respond with "New Value" followed by a "_" prompt, or several numbered options to choose from. At this point you can respond by typing a numeric value after the "_" prompt followed by **<enter>**, or type in the number that corresponds to one of the choices followed by **<enter>.**
8. Answer **N <enter>**to all remaining "ADJUST (Y/N)?" questions until the ">" prompt is displayed indicating you have exited the parameter setup function
9. Type **kset<enter>** to verify that the parameter you selected has been changed

For detailed descriptions of each of these parameters, please see section *Error! Reference source ot found.**.1 of this manual***

6.2.5 "O" OPT (OPTIONS CONFIGURATION) COMMAND

This command lists the firmware versions programmed into the 3 processors used in the AHF (the HMI, the DSP Control, and the Gate Drive control) along with factory programmed options. An example of information sent in response to an OPT command is:

```
SYSTEM OPTIONS CONFIGURATION

HMI SOFTWARE VERSION:    001.000
DSP SOFTWARE VERSION:    000.040
GDR SOFTWARE VERSION:      01.00
HMI SERIAL NUMBER:          9580
DSP SERIAL NUMBER:          9578
RATED VOLTAGE (V):           480
RATED CURRENT/INV (A):       100
```

This information indicates that the system is set up for 480 Vac nominal voltage and is a 100 amp capacity AHF. The 100 amp capacity indicates that the average rms current correction supplied by the AHF (of all 3 phases) will be limited to 100 amps.

6.2.6 "Q" QOFF SERIAL COMMAND

The QOFF command displays DC offsets of several parameters monitored by the control. All but the VHI, VLO, and V24 will normally be around 0. This is sometimes a useful diagnostic tool.

6.2.7 "S" OR "V" STATUS SERIAL COMMANDS

An **S** or **V** followed by an optional single letter command corresponding to a particular parameter may be sent to the AHF to obtain operating status. The following summarizes these commands:

Commands: AHF status information may be examined using the following commands:

Sn **Status** command displays the present status of a parameter. To display the status of a particular parameter, type **Sn<enter>.** "**S**" indicates the status command, "**n**" represents a character (letter or number) designating the parameter you desire to observe, and **<enter>** indicates an enter key, which is used to terminate the command. Table 6.2 contains the list of available parameters that may be examined. As an example, if the present AC line voltage is to be examined, one would type **SA** followed by striking the **<enter>** key. One can also just enter **S<enter>** with no parameter letter and obtain a status update of the most useful parameters all at once.

Vn **View** command is similar to the Status command except the View command will continually display the status of the selected parameter until one presses the escape key on the computer keyboard. To continually view the status of a particular parameter, type **Vn<enter>**. "**V**" indicates the View command, **"n"** represents a character designating the parameter to be viewed, and **<enter>** indicates a carriage return (or Enter key) which is used to terminate the command. Again, Table 6.2 contains the list of available parameters that may be examined. As an example, if the AC line voltage is to be viewed continuously, one would type **VA** followed by striking the **<enter>** key. One can also just enter **V<enter>** with no parameter letter and continually view the status of the most useful parameters all at once.

Table 6.2: Status Display Parameters

S/V option	Status Parameter	Units
A	AC Line Voltages	RMS volts
B	Line Frequency	Hertz
C	Line THDR (or THDF) percent voltage harmonic distortion on the line	% of line voltage
D	AHF Currents	RMS amperes
E	CT% (% of line CT rating that current thru the CTs represents) / Neutral Amps (Neutral current – only valid if 3 line CTs are used)	% of rating / RMS amperes
F	AHF Loading for each phase	% of rating
G	Line Currents (Current drawn from the utility)	RMS amperes
H	Load Currents (Current drawn by the load)	RMS amperes
I	Line_THDR (or THDF) percent current harmonic distortion on the line	% of line current
J	Load_THDR (or THDF) percent current harmonic distortion on the load	% of load current
K	Total current harmonics drawn from the utility	RMS amperes
L	Total current harmonics drawn by the load	RMS amperes
M	Line Power (Real Power/ Kvolt-amps/ power factor) drawn from the utility)	KW/KVA/PF
N	Load Power (Real Power/ Kvolt-amps/ power factor) drawn by the load)	KW/KVA/PF
O	DC Fan status and current	Fan status/ DC Amps
P	DC Capacitor Bus Voltage (sum of lower half + upper half of capacitor bank	Volts DC
Q	AHF Mode	
R	AHF Status	
S	Temperature (HMI internal/DSP Control board/Gate Drive board/Heatsink 1/Heatsink 2)	ºC
T	Inverter Currents – internal parameter roughly equal to AHF Currents	RMS amperes
U	Amount of high frequency current produced by AHF (should be less than 1% of the AHF current rating)	RMS amperes

V	Amount of DC produced by AHF (will vary between positive and negative values, usually < 3% of the AHF current rating)	DC Amps
W	Internal 24V main control & fan supply voltage	Volts DC
X	(AHF – Inv) currents (should be around 10-20% of the AHF current rating)	RMS amperes
Y	Phase shifts between line-to-neutral line voltage and fundamental load current for the 3 phases, followed by # of CTs used (2 or 3) and phase rotation (+ or -)	Degrees
None	Parameters A through S displayed all at once	

These parameters are identical to most of the parameters displayed on the LCD display via the OPERATING STATUS MORE display. For additional explanations on a parameter, please see the description of that parameter in sections 5.2 and 5.3 of this manual.

If an **S** (or **V**) command without a following letter is entered, parameters A through S will be displayed as a page of data similar to the screen shot shown in the example that follows. The group of parameters displayed are considered the most useful parameters to observe.

S Command Sample Output

```
*** HPS TRUWAVE STATUS (05/06/2019,11:52:53.64) ***

LINE_VOLT AB/BC/CA=  479.9/479.9/479.9  LINE_FREQUENCY(HZ)=        60.00
VLT_THDR% AB/BC/CA=    0.0/  0.0/  0.0  AHF_AMPS   A/B/C  =    0.0/  0.0/  0.0
CT% / NEUTRAL AMPS=      5% /   0.0     AHF_LOAD%  A/B/C  =      0/  0/  0
LINE_AMPS A/B/C   =   97.5/ 97.5/ 97.5  LOAD_AMPS A/B/C   =   97.5/ 97.5/ 97.5
LINE_THDR% A/B/C  =   49.0/ 49.0/ 49.0  LOAD_THDR% A/B/C  =   49.0/ 49.0/ 49.0
LINE_AMPS HARMONIC=   47.8/ 47.8/ 47.8  LOAD_AMPS HARMONIC=   47.8/ 47.8/ 47.8
LINE_PWR KW/KVA/PF=   70.6/ 81.1/ .871  LOAD_PWR KW/KVA/PF=   70.6/ 81.1/ .871
FANS(54321)       =      00000 / 0.024  DC_VOLT(LO+HI=SUM)=    0.0+  0.0=  0.0
MODE = OFF                              STATUS = DISABLED BY OPERATOR
TEMP HMI/DSP/GDR/HS1/HS2 = 28/ 28/ 28/ 41/ 42
```

6.2.8 "T" DATE AND TIME COMMAND

The HMI has an internal timekeeper that is used to timestamp when events occur. The time is not used in any critical systems in the AHF and will not affect its performance. To display the current time setting, enter TI at the command prompt. The current date and time will be displayed in 24 hour format (0-11 hours are AM, 12-23 hours are PM).

To change the date of the AHF, use the TD command. The complete date must be entered in month/day/year format, using a backslash as a delimiter. Each value must be exactly 2 characters long. For example, if the date is June 22, 2019, the following command needs to be entered:

TD=06/22/19

To change the time of the AHF, use the TT command. The complete time (seconds may be left off) must be entered in hours:minutes:seconds format, using a colon as a delimiter. Each value must be exactly 2 characters long. For example, if the time to be entered is 2:40PM, the following command needs to be entered:

TT=14:40:00 or **TT=14:40**

Please see section 5.5 for additional details.

6.2.9 "Z" ZCAL COMMAND

The ZCAL command displays several parameters monitored by the control. This is sometimes a useful diagnostic tool.

7. ETHERNET/IP AND MODBUS TCP FOR ETHERNET/IP EQUIPPED SYSTEMS

The Ethernet/IP version of the AHF is capable of Implicit I/O data communication with a PLC, HMI, SCADA or other Ethernet/IP scanner device. AHF status and troubleshooting information can be sent to a scanner device, and the AHF can be enabled or disabled by a scanner device via Ethernet/IP. Ethernet/IP or Modbus TCP industrial communications is an option that can be added to the AHF's HMI module. The Ethernet/IP module is fully ODVA compliant.

The AHF's HMI can communicate with an Ethernet/IP device via Implicit or I/O messaging at a periodic rate of up to 10Hz (100mS). During such a connection, a scanner device (PLC/HMI/SCADA) can periodically scan the adapter device (HMI) for operating status, attention code, voltage, current, power, and other status information. Please see Table 7.2 for a list of the available status data registers. The AHF's HMI can be actively monitored in real time using such input assembly data. In addition, the scanner device (PLC/HMI/SCADA) can periodically send the enable/disable signal to the adapter device (AHF's HMI). The AHF can be enabled or disabled via Ethernet/IP using such output assembly data. Please see Figure 7.1 for a graphic representation of assembly data transfer via Ethernet/IP.

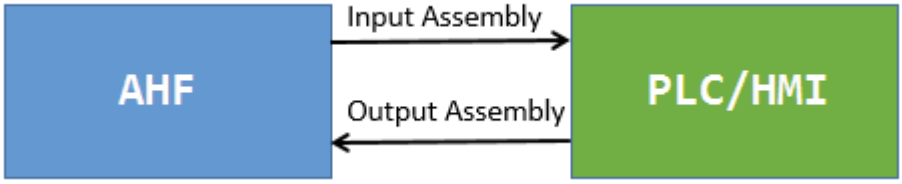

Figure 7.1: Ethernet/IP I/O Assembly

7.1 ETHERNET/IP DATA INFORMATION

The following tables show the input assembly data which is available to be read from the AHF's HMI by the Ethernet/IP Scanner device. It consists of 51 (signed 16 bit) registers.

The Operating Status register has 5 possible integer values which indicate the system operating status. See Table 7.1: Ethernet/IP parameters for Input Assembly Data for details.

The Attention Code register is a 16 bit data field. Each value has a different meaning and represents a different attention code. Please see for the meaning of each attention code.

Registers 3-51 (Bytes 4-101) represent sampled real numbers such as voltage, current, power, etc. Please see the "value/bit" to properly convert and display these values in volts, amps, watts, and etc. For example for Line Volts (register 3 or bytes 4-5 in Table 7.2), if you read a signed 16 bit value of 4800, multiply it by 0.1 (.1 volt/bit from Table 7.2) in your PLC program and convert to a float or double to get 480.0 volts.

INPUT ASSEMBLY (READ DATA)

Table 7.1: Ethernet/IP parameters for Input Assembly Data

Note: This applies to all 102 bytes

OBJECT	DIRECTION	INSTANCE ID	CONNECTION TYPE	MESSAGE TYPE	MAXIMUM REQUESTED PACKET INTERVAL (RPI)
Assembly Object	Target to Initiator	100 (0x64)	CLASS 1	CIP GENERIC	10 Hz (100ms)

Table 7.2: AHF Ethernet/IP Input Assembly Data

Bytes	Name	Info	Data Type
0-1	Operating Status	0=off, 1=precharging, 2=idle, 3=on-less than max, 4=on-max	INT (Signed Integer, 16 bits)
2-3	Attention Code	0=OK, non-zero value indicates attention needed (see Table 7.3)	
4-5	Line Volts (avg)	Avg of all 3 line-to-line rms voltages (.1 volt/bit)	
6-7	Line Amps (avg)	Avg of all 3 line rms currents (.1 amp/bit)	
8-9	Load Amps (avg)	Avg of all 3 load rms currents (.1 amp/bit)	
10-11	AHF % Loaded	AHF % loaded (.1 %/bit)	
12-13	Line Harm Amps (avg)	Avg of all 3 line harmonic rms currents (.1 amp/bit)	
14-15	Line Harm THDR/F%	THDF or THDR of line harmonics (.1%/bit)	
16-17	Load Harm Amps (avg)	Avg of all 3 load harmonic rms currents (.1 amp/bit)	
18-19	Load Harm THDR/F%	THDF or THDR of load harmonics (.1%/bit)	
20-21	Volt Harm THDR/F%	THDF or THDR of voltage harmonics (.1%/bit)	
22-23	Line KVA	Line KVA (.1 KVA/bit)	
24-25	Line KW	Line KW (.1 KW/bit)	
26-27	Line PF	Line PF (.001/bit)	
28-29	Load KVA	Load KVA (.1 KVA/bit)	
30-31	Load KW	Load KW (.1 KW/bit)	
32-33	Load PF	Load PF (.001/bit)	
34-35	Line Freq	Line Frequency (.01 Hz/bit)	
36-37	Neutral Amps	Neutral amps (.1 amp/bit) [0 if only 2 line/load CTs]	
38-39	Temperature – DSP	DSP PC board temperature (.1 C/bit)	
40-41	Temperature – HSB 1	Heatsink (left side) temperature #1 (.1 C/bit)	
42-43	Temperature – HSB 2	Heatsink (right side) temperature #2 (.1 C/bit)	
44-45	DC Fan Amps	DC Fan current (.001 amps/bit)	
46-47	DC Bus Voltage	DC Bus Voltage (.1 volt/bit)	
48-49	Line Volts (Vab)	Vab Line-to-line rms voltage (.1 volt/bit)	
50-51	Line Volts (Vbc)	Vbc Line-to-line rms voltage (.1 volt/bit)	

52-53	Line Volts (Vca)	Vca Line-to-line rms voltage (.1 volt/bit)	
54-55	Line Amps (A)	Phase A Line rms current (.1 amp/bit)	
56-57	Line Amps (B)	Phase B Line rms current (.1 amp/bit)	
58-59	Line Amps (C)	Phase C Line rms current (.1 amp/bit)	
60-61	Load Amps (A)	Phase A Load rms current (.1 amp/bit)	
62-63	Load Amps (B)	Phase B Load rms current (.1 amp/bit)	
64-65	Load Amps (C)	Phase C Load rms current (.1 amp/bit)	
66-67	AHF% Load (A)	Phase AN AHF % loaded (.1%/bit)	
68-69	AHF% Load (B)	Phase B AHF % loaded (.1%/bit)	
70-71	AHF% Load (C)	Phase C AHF % loaded (.1%/bit)	
72-73	Line Harm Amps (A)	Phase A Line Harmonic rms current (.1 amp/bit)	
74-75	Line Harm Amps (B)	Phase B Line Harmonic rms current (.1 amp/bit)	
76-77	Line Harm Amps (C)	Phase C Line Harmonic rms current (.1 amp/bit)	
78-79	Line Harm THDR/F% (A)	Phase A Line current Harmonic THDR or THDF (.1%/bit)	
80-81	Line Harm THDR/F% (B)	Phase B Line current Harmonic THDR or THDF (.1%/bit)	
82-83	Line Harm THDR/F% (C)	Phase C Line current Harmonic THDR or THDF (.1%/bit)	
84-85	Load Harm Amps (A)	Phase A Load Harmonic rms current (.1 amp/bit)	
86-87	Load Harm Amps (B)	Phase B Load Harmonic rms current (.1 amp/bit)	
88-89	Load Harm Amps (C)	Phase C Load Harmonic rms current (.1 amp/bit)	
90-91	Load Harm THDR/F% (A)	Phase A Load current Harmonic THDR or THDF (.1%/bit)	
92-93	Load Harm THDR/F% (B)	Phase B Load current Harmonic THDR or THDF (.1%/bit)	
94-95	Load Harm THDR/F% (C)	Phase C Load current Harmonic THDR or THDF (.1%/bit)	
96-97	Volt Harm THDR/F% (Vab)	Vab Line-to-line Harmonic THDR or THDF (.1%/bit)	
98-99	Volt Harm THDR/F% (Vbc)	Vbc Line-to-line Harmonic THDR or THDF (.1%/bit)	
100-101	Volt Harm THDR/F% (Vca)	Vca Line-to-line Harmonic THDR or THDF (.1%/bit)	

Table 7.3: Meaning of AHF Attention Code Register			
Attention Code	**Condition**	**Comments**	**Action to Take**
0	No attention needed	None	None – AHF on, operating without a problem
1	Upper Cap Vdc High	Voltage across upper half of dc link caps went too much higher than voltage across lower half.	Internal failure – contact factory – PC-H, PC-C, R1 (upper bleeder), R2 (lower bleeder), cables between PC-H-P6 and PC-C-P4 or PC-H-P3 and PC-C-P5, or wiring between PC-H, R1, R2, and DC link caps.
2	Lower Cap Vdc High	Voltage across lower half of dc link caps went too much higher than voltage across upper half.	Internal failure – contact factory – PC-H, PC-C, R1 (upper bleeder), R2 (lower bleeder), cables between PC-H-P6 and PC-C-P4 or PC-H-P3 and PC-C-P5, or wiring between PC-H, R1, R2, and DC link caps.
3	Mult. Overcurrents	Too many AHF rms overcurrents	Normally, system will software limit AHF currents to rated values; however, external transient conditions could result in software limits not being responsive enough. If this occurs often, contact factory.
4	Precharge Failure	Unit failed to precharge	Check History ON/OFF to determine cause of precharge failing.
5	Reserved		Contact factory
6	Too Many Itrips	Too many inverter current trips	If unit is newly installed, check to make sure CTs are in the correct place. If not newly installed, and only occurs occasionally, could be due to a high number of transients on the line (due to unstable power). If occurs multiple times, could be a system resonance problem or an internal problem due to fault in PC-C, inverter, or gate drives in inverter. If system resonance ruled out, perform low power inverter test to try to isolate problem.
7	Too Many Ptrips	Too many inverter pole trips	Internal problem – Inverter, gate drives, or PC-C. Perform low power inverter test to isolate problem.
8	Contactor Problem	Ac contactor failed to close	Internal problem – K1, PC-C, internal current sensors, or wiring.
9	AHF Isensor	Not enough current detected in AHF current sensors when Ac contactor is closed	Internal problem – internal current sensors, K1, PC-C, wiring, or power filtering (check fuses associated with PC-T).
10	Line Isensor	Not enough current detected in external CTs when Ac contactor is closed	External CTs may not be installed correctly or shorting bars may be installed shorting their output. Also possible internal problem, involving PC-R, PC-C, or cable connecting these 2 boards together.

11	Hi Freq In IAHF	High frequency detected in AHF current	Internal problem – PC-T failure and/or blown protection fuses associated with it. Look at AHF_HFAMPS in history ON/OFF to determine phase(s) that caused the fault.
12	Dc In IAHF	Dc detected in AHF current	Internal problem – IGBT device firing problem. Look at AHF_DCAMPS in history (largest value may indicate pole that device is in that is at fault)
13	AHF/Inv Isensor	Difference detected between AHF and inverter current sensors.	Internal problem – Possible failure in either one or more current sensors CS1-CS4 or PC-C board. Look at AHF-INV RMS AMPS in history to determine phase(s) that caused the fault.
14	AHF Ineffective	Diagnostic – AHF is ineffective at correcting harmonics	Problem with CTs being incorrectly positioned or a system resonance exists, resulting in current produced by AHF not effectively reducing harmonic currents in the line current. Check CTs using CT Setup LCD screen. Make sure CT physical locations (line or load side) agree with location programmed into system.
15	Uart Transmit	Internal problem with PC-C	Contact factory
16	Uart Receive	Internal problem with PC-C	Contact factory
17	Shutdowns	Too many inverter shutdowns in a short period of time	Make sure CTs are correctly positioned. Check ON/OFF history for shutdown reasons. Could be caused by temporary abnormal line power or load conditions. If persists contact factory.
18	Cont. Openings	Too many contactor openings in a short period of time	
19-32	Reserved		Contact factory
33	Disabled By Operator	System's power inverter disabled by operator	Press the RUN button on the touchscreen display to enable the system.
34	Disabled Externally	External disable capability selected (see section 5.6.3) and externally generated signal connected to HMI's P11 connector is disabling AHF.	Either provide correct signal to HMI's P11 connector to enable AHF or deselect external disable capability via LCD display.
35	Disabled By Network	External Disable via Ethernet/IP or Modbus TCP capability selected (see section 5.6.1) and enable command has not been received via Ethernet/IP or Modbus TCP	Disable this feature via the LCD front panel (see section 5.6.1) or change firmware in your PLC to send an enable to the AHF via the Ethernet/IP or Modbus TCP network. SeeTable 7.4 & Table 7.5.
36	Lost Hmi-Dsp Comm	Communications between HMI module and PC-C DSP control board in AHF has been lost	Problem with HMI module, PC-C, or cable connecting the two.
37	HS1 Over-Temperature	Temperature sensor on left side of heatsink exceeded limits.	Check for dirty air filter(s) on unit. Check fans for proper operation. Check ON/OFF history to find temperatures of

38	HS2 Over-Temperature	Temperature sensor on left side of heatsink exceeded limits.	all sensors. If HS1 much different from HS2, could be a bad sensor. If a sensor is very different from other sensors, could be a bad sensor.
39	DSP Over-Temperature	Temperature sensor on PC-C DSP control board exceeded limits.	
40	GDR Over-Temperature	Temperature sensor on PC-G or PC-GP gate drive board exceeded limits.	
41	+24V Low	+24V main supply too low	+24V supply or PC-C board problem
42	DSP +15V Low	+15V supply on DSP bad	PC-C board problem
43	DSP -15V Low	-15V supply on DSP bad	PC-C board problem
44	Line Rms Volts Too Low	Line voltage too low for unit to run.	When utility voltage returns to normal unit will operate again. If voltage is OK, problem with PC-H, PC-C, or internal wiring.
45	Line Rms Volts Too High	Line voltage too high for unit to run.	
46	Line Freq Too High/Low	Frequency beyond +/- 5 Hz from nominal.	If running from a generator,Table 7.5 check generator for proper output.
47	No Phaselock To Line	System not phaselocked to ac line	None – temporary condition – Either system is in process of phaselocking to AC line or frequency of line is presently outside operational specifications.
48	Bad HMI Nvram	Internal problem with HMI	Contact factory
49-69	Reserved		Contact factory
70	Lost DSP-Gate Dr Comm	Communications lost between PC-C and PC-G or PC-GP gate drive boards	Problem with PC-C, PC-G or PC-GP, or cables connecting them together.
71	Gate Dr Sw Version Wrong	Gate drive board software version incompatible with DSP software version	Contact factory to update software versions.
72	Gate Dr Can't Read Temps	PC-G or PC-GP Gate drive board can't read temperatures	PC-G or PC-GP board problem
73	Gate Drive Misc Problem	Misc problem found by PC-G or PC-GP gate drive bd.	PC-G or PC-GP board problem
74	Not Ready A-	Device A- gate drive problem.	24V not getting to gate drive. Power supply or other circuitry associated with that gate drive not working. For units > 100 amps, ribbon cable problem going to gate drive board on IGBT module. Problem with the IGBT module.
75	Not Ready A+	Device A+ gate drive problem.	
76	Not Ready B-	Device B- gate drive problem	
77	Not Ready B+	Device B+ gate drive problem	
78	Not Ready C-	Device C- gate drive problem	
79	Not Ready C+	Device C+ gate drive problem	
80	Pole Trip A-	Pole trip received from a- igbt	Check unit's "History" to see if an inordinate number of these have been occurring. If so, a possible problem with an IGBT device, gate drives, or connection between IGBT devices and gate drives may exist.
81	Pole Trip A+	Pole trip received from a+ igbt	
82	Pole Trip B-	Pole trip received from b- igbt	

83	Pole Trip B+	Pole trip received from b+ igbt	
84	Pole Trip C-	Pole trip received from c- igbt	
85	Pole Trip C+	Pole trip received from c+ igbt	
86	Pole Trip Misc	Pole trip occurred, but cause could not be determined.	Should not occur. Contact factory if it does.
87-119	Reserved		Contact factory
120	Software Missing	Internal firmware problem	Contact factory
121	Power-Up Delay	Normal system power up delay	None – temporary condition
122	DSP Nvram Not Initialized	Internal problem with PC-C	Contact factory
123	Bad Nvram Options Data	Internal problem with PC-C	Contact factory
124	Bad Nvram B-Setup Data	Internal problem with PC-C	Contact factory
125	Bad Nvram G-Setup Data	Internal problem with PC-C	Contact factory
126	Bad Nvram K-Setup Data	Internal problem with PC-C	Contact factory
127	Bad Nvram Offset Data	Internal problem with PC-C	Contact factory
128	Bad Nvram Gain Data	Internal problem with PC-C	Contact factory
129	Contactor Closing	Ac contactor K1 is in the process of closing	None - temporary condition
130	Contactor Opening	Ac contactor K1 is in the process of opening	None – temporary condition
131	Inverter Test	System is in inverter test mode	Only occurs if test mode requested via Ethernet comm.
132	Thyristor Test	System is in thyristor test mode	Only occurs if test mode requested via Ethernet comm.
133	Contactor Test	System is in contactory test mode	Only occurs if test mode requested via Ethernet comm.
134	Vdc Test	System is in dc voltage test mode	Only occurs if test mode requested via Ethernet comm.
135-140	Reserved		Contact factory
141	Dc Cap Voltage Too High	Dc cap voltage went too high to continue operation	If ON/OFF history shows multiple occurrences, check external line or load CTs for proper installation. Otherwise can be a temporary condition caused by some external anomaly with the line or load. As soon as DC voltage reduces, system will start operating again.
142	IAHF Too High When Roff	Too much AHF current detected when ac contactor is open.	Possible internal problem with AC contactor, AHF current sensors, or PC-C. Observe AHF currents on LCD display to determine which phase problem is with.
143	IAHF Too Low When Ron	Not enough AHF current detected when ac contactor is closed.	None – usually a temporary condition. If condition persists, will be followed by AHF ISENSOR indication.

144	Line Current Too Low	Not enough line current detected when ac contactor is closed and inverter not yet operating.	Some minimal line current should register when AC contactor is closed and inverter is not yet operating. If not, external CTs may not be properly located or may have shorting strips in place, shorting their output. If this is not the case, a possible internal problem could exist with PC-R, PC-C or cable interconnecting these.
145	Load Too Low	Load power too low to operate	If “UNIT DISABLED IF LOAD POWER BELOW THIS %” parameter (see section **Error! Reference source not ound.**) is set to a non-zero value, system is either OFF if not previously operating or IDLE if previously operating because load power is too low. Once load power increases, unit will resume operation. This is normal operation unless the load is actually high enough but the external line/load CTs are not reading current correctly.
146	Hw Itrip Stuck On	Internal problem	Problem with PC-C board.
147	Waiting For Fdr To Finish	DSP is finishing storing FDR recorded at last shutdown	None – temporary condition
148	Dsp Is Being Reprogrammed	Dsp is being programmed with new firmware	None – temporary condition
149	Gate Drive test in progress	Before inverter is started each time a test on the gate drive signals between PC-C and PC-G or PC-GP is done	None – temporary condition
150	Gate Drive test failed	Problem with gate drive signals detected between PC-C and PC-G or PC-GP	Problem with PC-C, PC-G or PC-GP, or cables connecting the two together.
151	Load Amps too low	When external CTs are on load side, some load current must exist for AHF to run.	When load current exists, unit will run. If sure that load current exists, check to make sure unit is seeing load current on all 3 phases. If not, CTs may be positioned or wired incorrectly or shorting bars are shorting their output. Could also be internal problem with PC-R, PC-C or cable connecting the two.
152	Load PF too low	AHF will not run if linear load power factor (harmonic currents filtered out) is too low.	If linear load power factor is below value set in 5.6.1, AHF won’t run. Check CTs for proper placement and wiring.
149-255	Reserved		Contact factory
256	Upper>Lower Dc Cap Volts	Voltage across upper half of dc link caps much higher than lower half. if this continues, upper cap vdc high will shut down unit.	See UPPER CAP VDC HIGH Remedy.

257	Lower>Upper Dc Cap Volts	Voltage across lower half of dc link caps much higher than upper half. if this continues, lower cap vdc high will shut down unit.	See DIAG: LOWER CAP VDC HIGH Remedy.
258	HS1 High-Temperature	Temperature sensor on left side of heatsink is high.	If temperature continues to climb, unit will shut down due to overtemp. Check for dirty air filter(s) on unit. Check fans for proper operation. If HS1 much different from HS2, could be a bad sensor. If a sensor is very different from other sensors, could be a bad sensor.
259	HS2 High-Temperature	Temperature sensor on right side of heatsink is high.	
260	DSP High-Temperature	Temperature sensor on DSP control board is high.	
261	GDR High-Temperature	Temperature sensor on Gate drive board is high.	
262-	Reserved		Contact factory

The following tables show the output assembly data which is available to be written to the AHF by the Ethernet/IP Scanner device. It consists of 1 (16 bit) register.

This register is sent by the PLC/HMI device to Enable or Disable the AHF. Please see Table 7.4 and Table 7.5 for more information.

Table 7.4: Ethernet/IP parameters for Output Assembly Data

Note: This applies to all 2 bytes

OBJECT	DIRECTION	INSTANCE ID	CONNECTION TYPE	MESSAGE TYPE	MAXIMUM REQUESTED PACKET INTERVAL (RPI)
Assembly Object	Initiator to Target	150 (0x96)	CLASS 1	CIP GENERIC	10 Hz (100ms)

OUTPUT ASSEMBLY (WRITE DATA)

Table 7.5: AHF Ethernet/IP Output Assembly Data

Bytes	Register Name	Info
0-1	AHF_EIP_ENABLE	Disable AHF= hex 0000 Enable AHF = hex 0001

7.2 IP ADDRESS CONFIGURATION FOR ETHERNET/IP

In order to use Ethernet/IP with a PLC/HMI/SCADA device, the AHF Ethernet/IP module needs an IP address. These steps explain how to obtain the IP address via DHCP or set it static for use in your Ethernet/IP network.

These steps assume that the AHF unit is energized but may or may not be enabled and correcting harmonics.

Refer to sections 5.9 and 5.9.1 in this manual for detailed pictures of the procedure. These steps are identical to the steps in that section, the only difference being the message Ethernet/IP Info at the top of the display instead of Ethernet Info.

1. Connect a Cat-5 Ethernet cable to the Anybus CompactCom M40 module on the back of the AHF front panel. There should be 2 Ethernet ports next to each other, connect to either one. Connect this Ethernet cable to your Ethernet/IP Network. See the picture below. The Ethernet port is circled in red. There is a white Ethernet cable coming out of the Ethernet port in the picture.



2. From the MENU display, press the ETHERNET/IP INFO button. The Ethernet/IP info display will open showing the present IP address of the Anybus CompactCom M40 module.

2. The unit comes with DHCP set by default. If you intend to use DHCP, simply copy the network address information from this screen and input it into your PLC/HMI software. See an example of this in section 7.3 with RSLOGIX 5000.

3. If you intend to set a static IP Address, follow the directions in section 5.9.1 of this manual (note that the Ethernet/IP Info screen is nearly identical to the Ethernet Info screen), and then use the network address info you entered in your PLC/HMI software.

It is also possible to set the IP Address and configure other network information in the Anybus CompactCom M40 module using the built in web server using an Internet browser window.

First find the DHCP determined IP Address using the Ethernet/IP Info screen as described in the steps above. Then type that IP Address into the browser window address bar. A window similar to the following picture will open.



Click on Status under NETWORK to see more detailed network information. Click on Configuration under NETWORK to set a Static IP Address.

7.3 USING AHF'S HMI WITH RSLOGIX 5000 VIA ETHERNET/IP

This example will walk you through setting up RSLogix 5000 to enable a generic PLC to communicate with the AHF's HMI via Ethernet/IP. This is a generic example which should be used as a guide when setting up your system. If you have further questions, please see the RSLogix 5000 user manual or contact the manufacturer.

7.3.1 REQUIRED MATERIALS

1. Ethernet/IP Enabled HPS TruWave AHF HMI connected to the Ethernet/IP network.
2. RSLogix5000 on a PC or laptop.
3. Ethernet/IP capable PLC or HMI device of your choice

Note: Before you begin, please make sure that the AHF HMI's Ethernet/IP port is connected to your network (see section 7.2 of this manual) and the PLC or HMI is connected to your network

7.3.2 RSLOGIX 5000 CONFIGURATION

1. Open Studio 5000 and create a new project. Choose your PLC and the number of Expansion I/O modules your PLC has.

2. In the Studio 5000 Controller Organizer window you will see I/O Configuration and Ethernet with the name of your PLC and project name under that. Right click on the word Ethernet and select New Module. See screenshot below, the text you should right click on is circled in red.

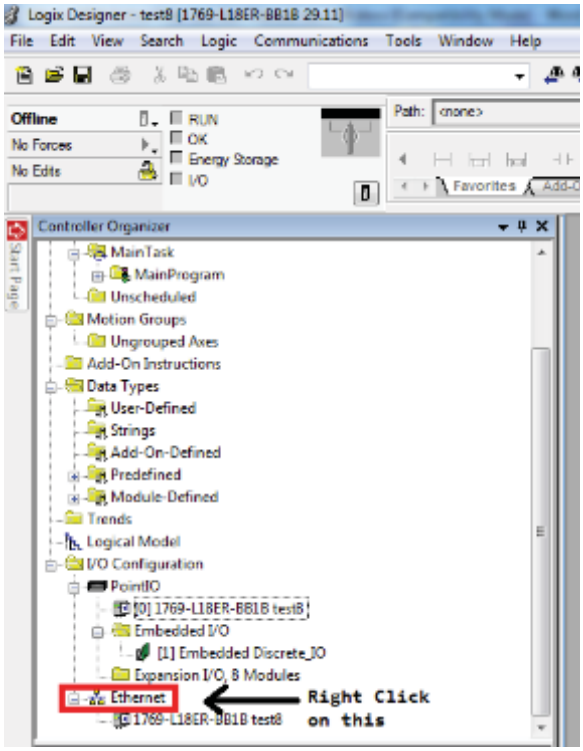

3. Search for and choose Generic Ethernet Module and click Create. See screenshot below.

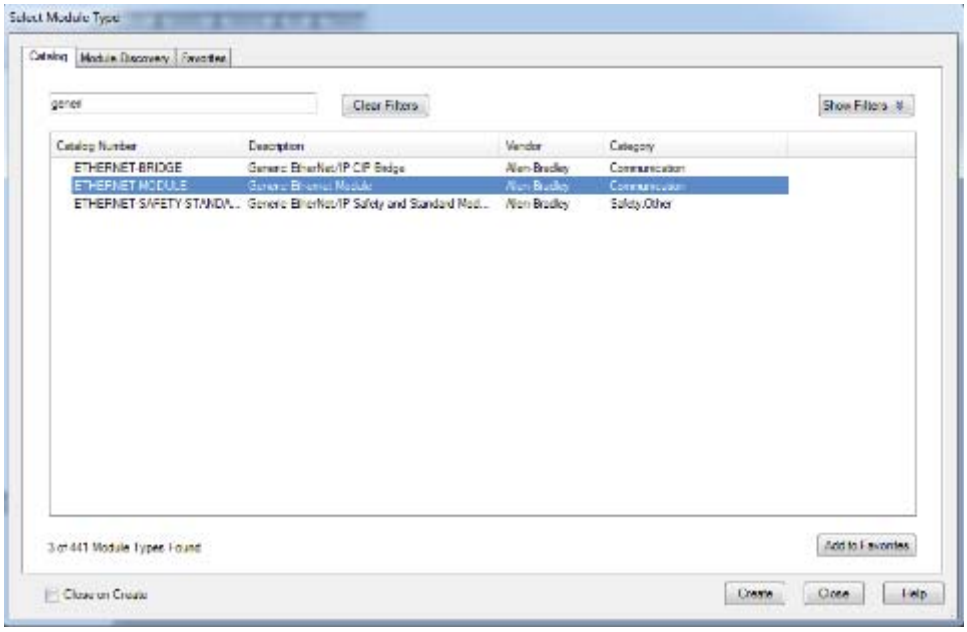

4. In the window that pops up, type in the data to match the following screenshot. Note that the IP Address should match the IP Address found in section 7.2 of this manual.

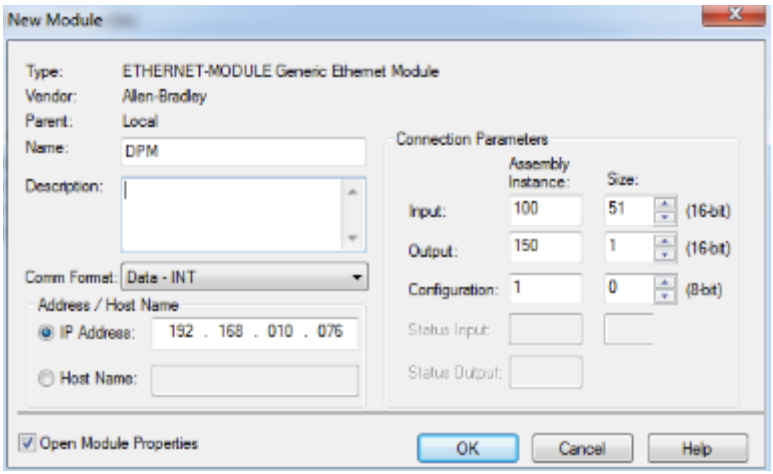

5. Click OK and in the Connection tab, put 100mS for the Requested Packet Interval (RPI).

6. Now go to Communications, Who Active. Select AB_ETHIP-1 and select the PLC. Click Go Online. See screenshot that follows.

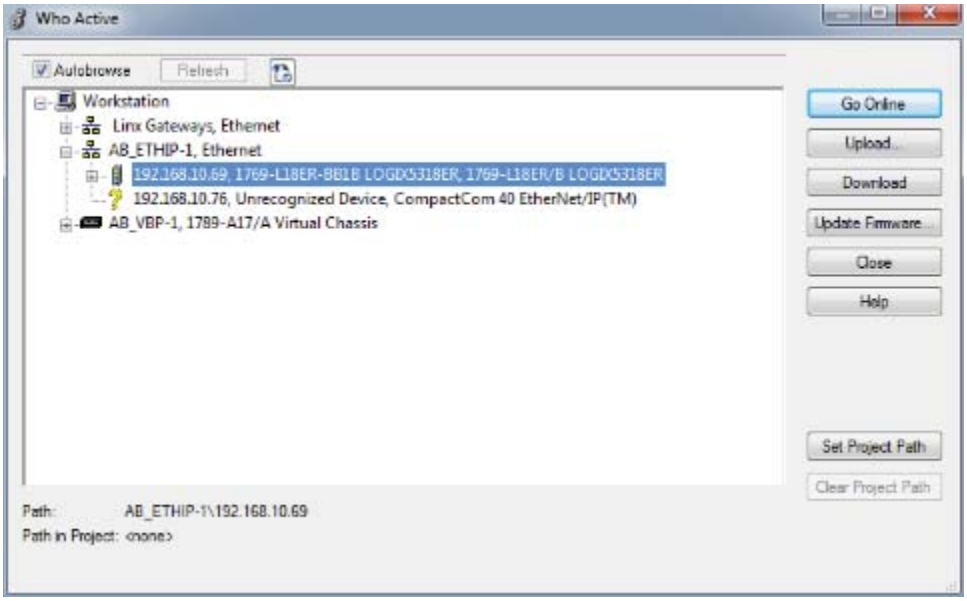

7. In the window which opens, click Download to program your PLC.

8. Now the PLC should be communicating with the AHF's HMI and reading status data. To view the status data, right click on Controller Tags and click on Monitor Tags. See screenshot below.

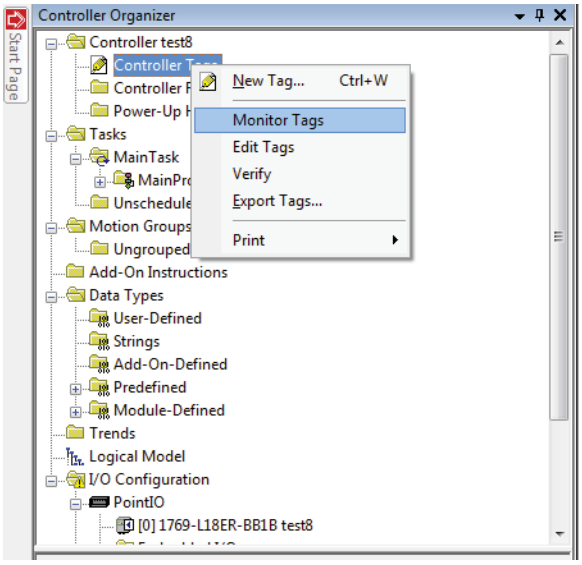

9. The screenshot below shows an example of Controller Tags showing AHF status data.

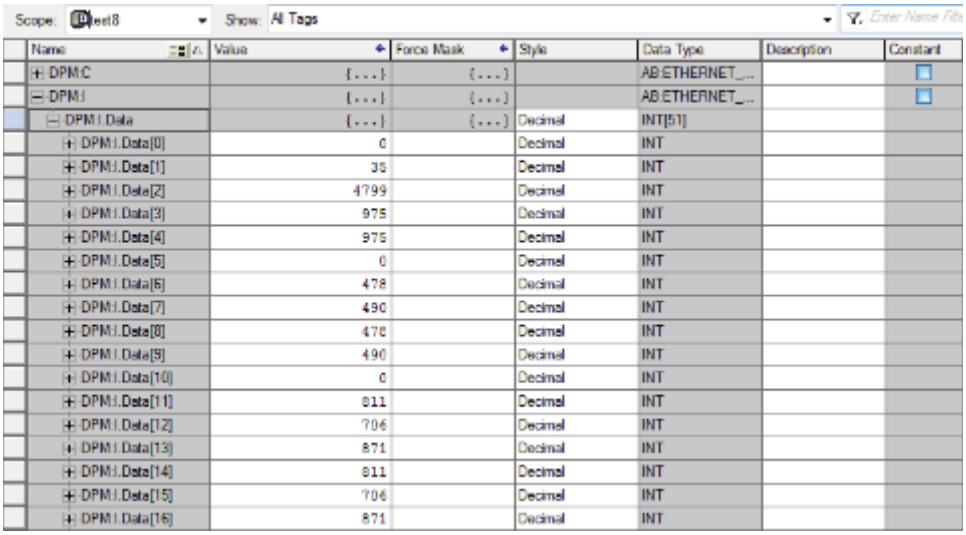

Scope: test8 Show: All Tags

Name	Value	Force Mask	Style	Data Type	Description	Constant
DPM:C	{...}	{...}		AB:ETHERNET_...		
DPM:I	{...}	{...}		AB:ETHERNET_...		
DPM:I.Data	{...}	{...}	Decimal	INT[51]		
DPM:I.Data[0]	0		Decimal	INT		
DPM:I.Data[1]	35		Decimal	INT		
DPM:I.Data[2]	4799		Decimal	INT		
DPM:I.Data[3]	975		Decimal	INT		
DPM:I.Data[4]	975		Decimal	INT		
DPM:I.Data[5]	0		Decimal	INT		
DPM:I.Data[6]	478		Decimal	INT		
DPM:I.Data[7]	490		Decimal	INT		
DPM:I.Data[8]	478		Decimal	INT		
DPM:I.Data[9]	490		Decimal	INT		
DPM:I.Data[10]	0		Decimal	INT		
DPM:I.Data[11]	811		Decimal	INT		
DPM:I.Data[12]	706		Decimal	INT		
DPM:I.Data[13]	871		Decimal	INT		
DPM:I.Data[14]	811		Decimal	INT		
DPM:I.Data[15]	706		Decimal	INT		
DPM:I.Data[16]	871		Decimal	INT		

DPM:I Data shows the input data. Location 0 is the Operating Status (see Table 7.2) and is showing 0 meaning the AHF is OFF. Location 1 is the Attention Code and is showing 35 meaning “Disabled By Network” (see Table 7.3).

Location 2 is Line Volts (avg) and is showing 4799 which is actually 479.9 volts. As was mentioned in section 7.1, to properly interpret the data in locations 2-50, look at the conversion factor in Table 7.2. For line volts its (.1 volt/bit) which means 4799 should be multiplied by 0.1 to get 479.9 volts. In your PLC ladder logic program, take location 2 and multiply it by 0.1 and then convert to a float or double to properly display the Line Volts value.

7.4 MODBUS/TCP FOR ETHERNET/IP EQUIPPED SYSTEMS

Modbus TCP (Modbus TCP/IP) is the Modbus RTU protocol sent over the network via Ethernet. If you ordered the Modbus-TCP version of the AHF, the Anybus CompactCom M40 module inside the AHF’s HMI unit is able to communicate to a PLC/HMI via Modbus-TCP. The same Input and Output data defined for Ethernet/IP is available for Modbus-TCP. Please refer to all Tables in section 7.1.

The following example will show how to communicate with the AHF’s HMI via Modbus-TCP. This example uses a free Modbus Master Simulator tool which will simulate a Modbus-TCP enabled PLC.

It can be downloaded free of charge at the following link.
http://en.radzio.dxp.pl/modbus-master-simulator/

7.4.1 REQUIRED MATERIALS

1. Ethernet/IP Enabled HPS TruWave AHF’s HMI connected to the Modbus-TCP network.
2. Radzio! Modbus Master Simulator on a PC or laptop.

7.4.2 MODBUS-TCP EXAMPLE

1. Install Radzio! Modbus Master Simulator on your PC or laptop and plug your computer Ethernet cable into the network.
2. Open Radzio! Modbus Master Simulator

3. Go to File/New. Select Holding Registers and enter 51 for the length. Device ID should be 1. Address should be 0. See screenshot below.

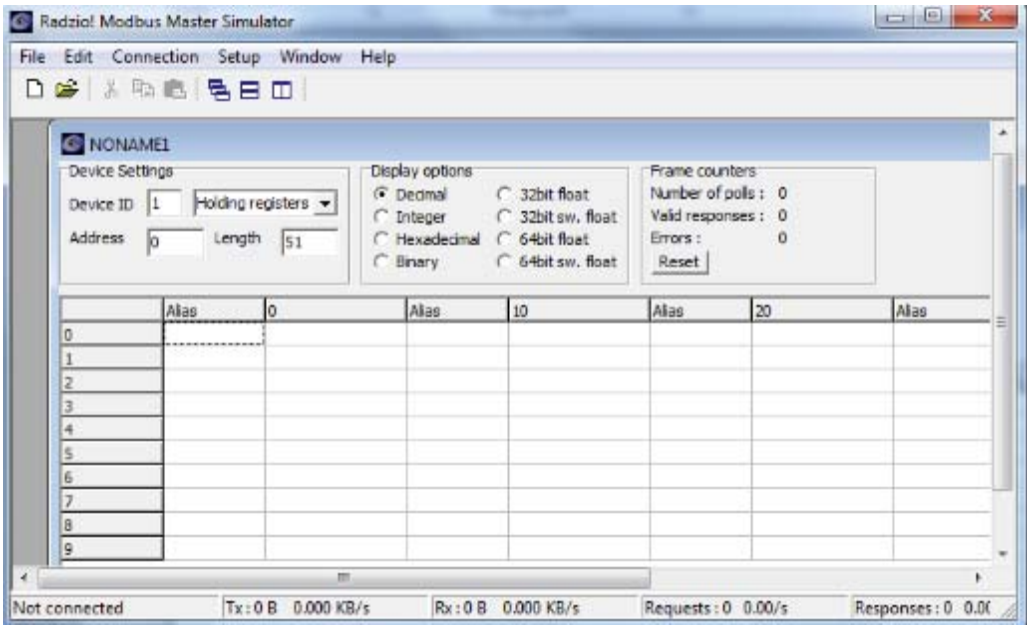

4. Go to Connection/Settings and select Modbus TCP. Enter the IP address that you found in section 7.2 of this manual. Click Ok. See screenshot below.

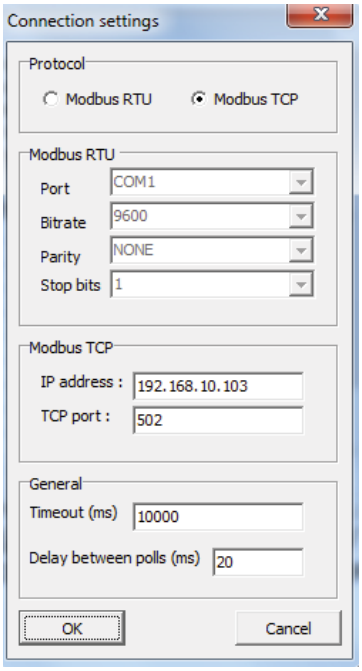

5. Go to Setup/Data definition, and for the Scan rate, enter the rate at which you would like to periodically request data from the AHF. The fastest rate at which you can poll the AHF is 10Hz, so the smallest number you can enter is 100mS.

6. Go to Connection/Connect.

7. You should now see the AHF status data updated in real time on the screen. See screenshot below.

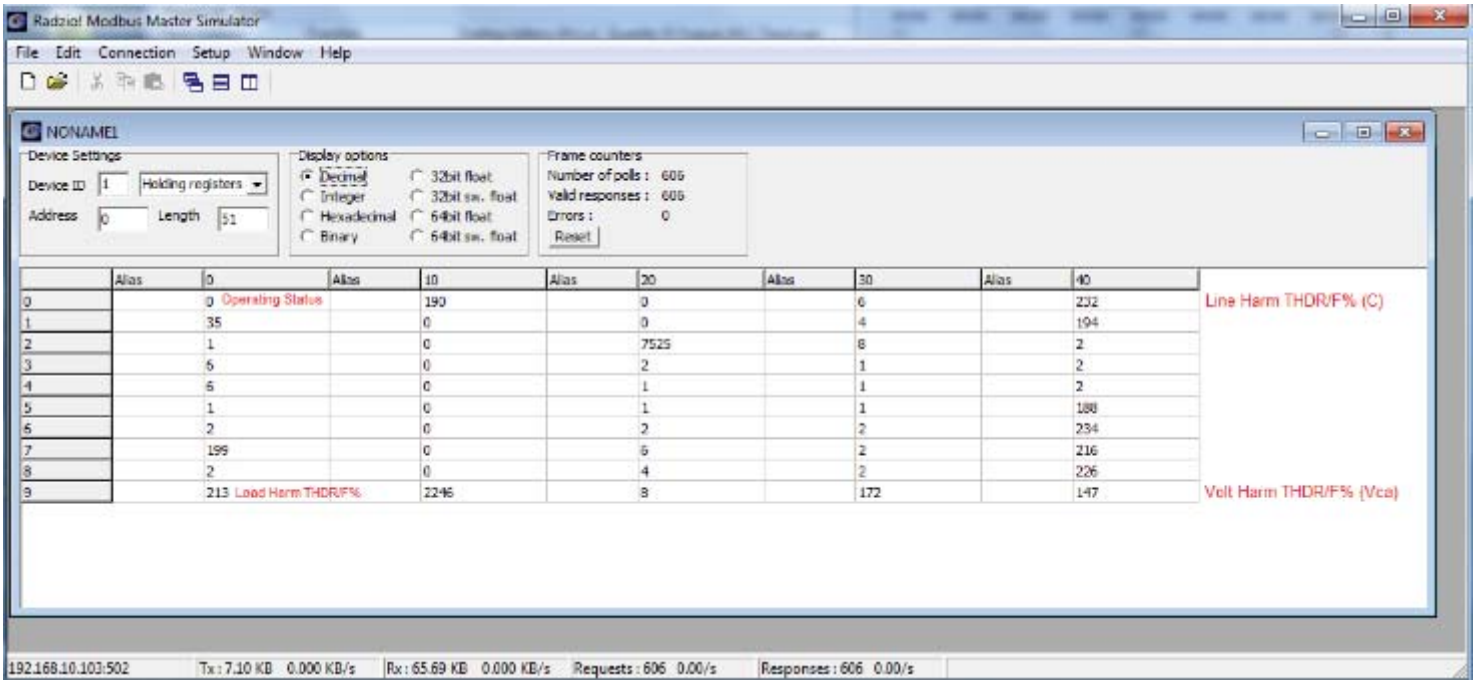

The data in the screenshot above represents the registers of Table 7.2.

In order to enable or disable the AHF via Modbus-TCP, send a Modbus “write single register” command and send a “1” to enable the AHF and a “0” to disable the AHF.

This example shows how the AHF can be used to communicate with a Modbus-TCP master device such as a PLC/HMI/SCADA. Please use this example as a guide when setting up your Modbus-TCP network. If you have further questions, please contact HPS.

7.5 VIEWING ETHERNET/IP DATA ON A WEBSITE

The AHF has an optional capability to view the Ethernet/IP Input Assembly Data by using a website via regular Ethernet on port 80. This eliminates the need for a PLC/HMI in order to access the same data that can be accessed via Ethernet/IP.

To view the data on a website follow these steps:

1. Make sure that the AHF’s HMI Industrial Network Ethernet Port is connected to the Ethernet network via an Ethernet cable. See section 7.2 of this manual. This can be the same network as you use for Ethernet/IP. Connect a desktop or laptop computer to the network.
2. Find the IP Address of the Anybus CompactCom M40 by going to the ETHERNET/IP INFO display as described in section 5.9.4 of this manual.
3. Open a web browser such as Google Chrome or Internet Explorer and in the address bar, type in the IP Address you found in step 2. You should see something similar to the following picture.

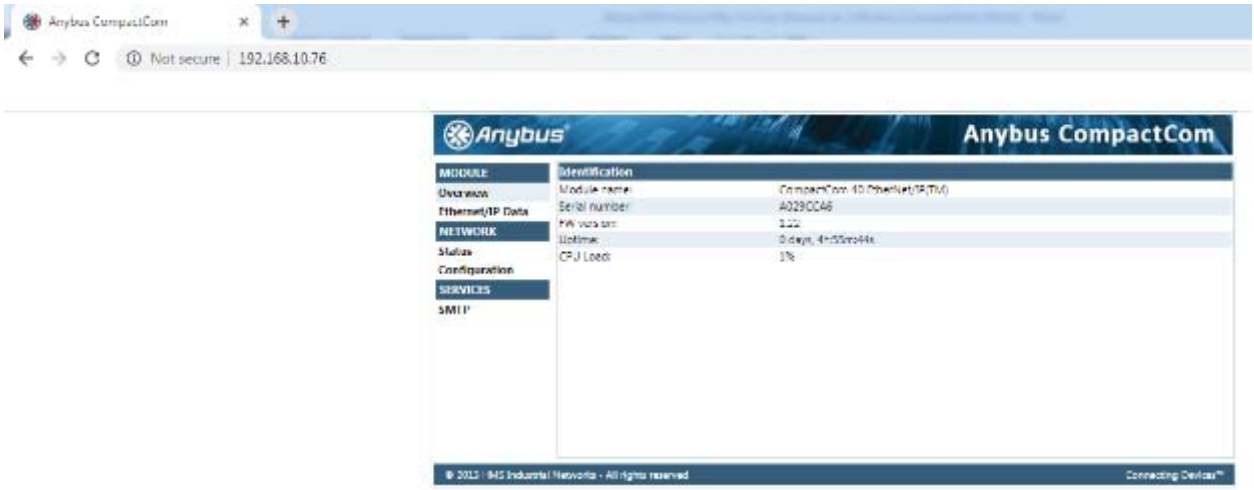

4. Click on the Ethernet/IP Data tab underneath Overview. A window similar to the following picture will open.

Refresh Data

Hammond Power Solutions

AHF Ethernet/IP Input Assembly Data

The following is real time AHF I/O status data. This is the same data that is available via the Ethernet/IP Input Assembly Instance 100. Click on Refresh Data button to refresh the data.

Please click the following link to see a table describing the meaning of each AHF status register and the meaning of Attention Code. It is recommended to right click on the link and select "Open Link in New_Tab" to see the meaning of the data in another window as a reference while looking at the data. AHF register info

Operating Status	0
Attention Code	33
Line Frequency (hz)	60.00
Neutral Current (amps)	0.0
Temperature DSP (c)	29.2
Temperature HSA (c)	41.0
Temperature HSB (c)	42.0
DC Fan Current (amps)	0.024
DC Bus Voltage (volts)	0.0
AHF % Loaded Total:(A/B/C)	0.0: (0.0/ 0.0/ 0.0)

	Line	Load
RMS Voltage Average:(Vab/Vbc/Vca) (volts)	479.9: (479.9/ 479.9/ 479.9)	N/A
RMS Current Average:(A/B/C) (amps)	195.1: (195.1/ 195.1/ 195.1)	195.1: (195.1/ 195.1/ 195.1)
Harmonic Current Average: (A/B/C) (amps)	95.7: (95.7/ 95.7/ 95.7)	95.7: (95.7/ 95.7/ 95.7)
THDR/F% Current Average: (A/B/C) (%)	49.0: (49.0/ 49.0/ 49.0)	49.0: (49.0/ 49.0/ 49.0)
THDR/F% Voltage Average: (Vab/Vbc/Vca) (%)	0.0: (0.0/ 0.0/ 0.0)	N/A
KW/KVA/PF	141.3/ 162.2/ 0.871	141.3/ 162.2/ 0.871

5. This page shows the same AHF Status data which is available over Ethernet/IP or Modbus TCP. To read the latest data from the AHF, click on the Refresh Data button at the top of the page.

6. To find out the meaning of this data, right click on the AHF register info link and select "Open Link in New_Tab". This will display a page showing a copy of Table 7.2 and Table 7.3 from section 7.1 of this manual. See the following picture.



Ethernet/IP Input Assembly Data Information

Name	Info
Operating Status	0=off, 1=precharging, 2=idle, 3=on-less than max, 4=on-max
Attention Code	0=OK, non-zero value indicates attention needed
Line Volts (avg)	Avg of all 3 line-to-line rms voltages
Line Amps (avg)	Avg of all 3 line rms currents
Load Amps (avg)	Avg of all 3 load rms currents
AHF % Loaded	AHF % Loaded 0 100%
Line Harm Amps	Avg of all 3 line harmonic rms currents
Line Harm THDR/F%	THDF or THDR of line harmonics
Load Harm Amps (avg)	Avg of all 3 load harmonic rms currents
Load Harm THDR/F%	THDF or THDR of load harmonics
Volt Harm THDR/F%	THDF or THDR of voltage harmonics
Line KVA	Line Apparent Power
Line KW	Line Real Power
Line PF	Power Factor
Load KVA	Load Apparent Power
Load KW	Load Real Power
Load PF	Power Factor
Line Frequency	Frequency in Hertz
Neutral Amps	[0 if only 2 line/load CTs]

Attention_code	Condition	Course of action
0	No attention needed	None, AHF operating without a problem
1	Upper Cap Vdc High	External failure contact factory PC-H, PC-C, R1 (upper bleeder), R2 (lower bleeder), cables between PC-H-P6 and PC-C P1 or PC-H P3 and PC-C P5, or wiring between PC-H, R1, R2, and DC link caps.
2	Lower Cap Vdc High	External failure contact factory PC-H, PC-C, R1 (upper bleeder), R2 (lower bleeder), cables between PC-H-P6 and PC-C-P4 or PC-H-P3 and PC-C-P5, or wiring between PC-H, R1, R2, and DC link caps.
3	Mult Overcurrents	Normally, system will software limit DPM currents to rated values; however, external transient conditions could result in software limits not being responsive enough. If this occurs often, contact factory.
4	Precharge Failure	Check History ON/OFF to determine cause of precharge failure.
5	Reserved	Contact factory
6	Too Many Trips	If unit is newly installed, check to make sure CTs are in the correct phase. If not newly installed, and only occurs occasionally, could be due to a high number of transients on the line (due to unstable power). If occurs multiple times, could be a system resonance problem or an internal problem due to fault in PC-C, inverter, or gate drives in

For the example in the above screenshot, if you look in the first table, Operating Status value of 3 means on-less than max, which indicates that the system is enabled and fully operational.

This web server interface is very useful to troubleshoot Ethernet/IP or Modbus TCP. If you open this web page and the data is correctly displayed and updated from the AHF, the issue is most likely on the PLC/HMI side of the connection.

8. PREVENTATIVE MAINTENANCE

WARNING: Operating a system continuously with dirty air filters, inoperable fans, or in a high room ambient temperature may decrease the operational life of any electrical equipment, including your AHF.

The following preventative maintenance items should be performed on a monthly basis or as needed, depending on the environment that the unit is installed.

- Check installation environment to verify that it is free from water, metal filings, excessive dust or other conductive impurities and corrosive chemicals.
- Clean or change the intake air filter(s) as required, depending on the environmental conditions. Type 1 units use air filter media housed in reusable metal frames. Clean or replace fiberglass filter media with media shown in Table 8.1 or equivalent.

Table 8.1: Replacement Air Filter Media for Type 1 Enclosed AHFs

AHF Size (Amp rating)	Media Size (inches)	HPS part #	McMaster-Carr part #
50 or 100	12x16x1	00002749.00	2173K4*
150 or 200	16x20x1**	00002750.00	2173K3
300	24x24x1	00002751.00	2173K7

*2173K4 comes as 16x25 piece. Cut off 1” to make it 16x24, then cut in half to make two 12x16 pieces. Use one piece now and save the other for later.

**2 pieces required per 150 or 200 Amp AHF, as these AHFs have front and bottom intake air filters.

- Make sure all air inlet and exhaust openings are clear and free from any obstructions.
- Check the fan current on the LCD display. If AHF is enabled and running, a lower than normal fan current being displayed may indicate a fan needs to be replaced. See section 5.3 for additional information on checking the fan current.

Once or twice per year (depending on the environment), it is recommended that a qualified technician, exercising proper safety procedures (See “Safety Precautions” section) perform the following preventive maintenance inside the enclosure:

- Check for excessive dust/dirt buildup inside system. Clean as necessary.
- Check interior of unit for indication of overheated components and/or connections or any signs of corrosion.

Any preventative or corrective maintenance performed inside the cabinet should only be performed by a qualified technician, exercising proper safety procedures.

9. TROUBLESHOOTING

WARNING

Risk of ***Electric Shock***. Only qualified personnel should open an AHF system and attempt to repair it. Personnel entering the cabinet may be exposed to an electrical shock hazard that could result in death or injury or further damage to the AHF. It is highly advised to contact factory if you suspect a problem with your system.

Your AHF is equipped with extensive diagnostic capabilities. It will convey problems detected via messages displayed on the LCD display, Ethernet, or Ethernet/IP or Modbus TCP connections. At the center, bottom of all LCD display pages is a status indication (ON, OFF, PRECHARGING, etc.). For additional information on this status indication, refer to section 5.

Below this status indication will appear another message in smaller font, elaborating on the status. When operating normally, the status will display “ON” and the message underneath will normally be “FULLY OPERATIONAL”. If a “warning” condition such as a high temperature exists, the message underneath will indicate that condition. These warning messages and any other messages displayed might require attention.

9.1 FRONT PANEL HMI DISPLAY STATUS (FAULT) MESSAGES

Possible “fault” messages that can be displayed are listed in the following **Error! Reference source not ound.**. It is possible that a problem may be detected that is due to some temporary condition, that once that condition passes, the system can return to normal operation. Your AHF has the capability in most cases to “forgive” faults in hopes that the condition passes; therefore, simply getting one to a few of these fault messages may not necessarily mean that there is a definite problem. If a “fault” occurs, the system will attempt to try operating again. In cases where a “DIAG” message is displayed, the DSP control may perform a full system reset after a short period of time. If the “DIAG” condition persists, after a few resets, the system will give up. A system reset record will be saved in the History Reset storage data base (HR) is such a reset occurs. Such “temporary” faults do not necessarily indicate a problem exists with your system; however, if faults begin to appear in numbers, action may need to be taken to correct the situation.

“DIAG” conditions that persist to the point where the system no longer resets itself to clear the diagnostic and Over-temperature shutdowns will require power cycling the AHF to clear the fault. This power cycling should only be done once. It the problem re-occurs in a short period of time, the problem should be resolved prior to attempting additional power cycling. Continuing power cycling to clear such faults may result in damage to the system.

Table 9.1: Fault Messages

LCD Message	Comments	Action to Take
DIAG: UPPER CAP VDC HIGH	Voltage across upper half of DC link caps went too much higher than voltage across lower half.	Internal failure – contact factory – PC-H, PC-C, R1 (upper bleeder), R2 (lower bleeder), cables between PC-H-P6 and PC-C-P4 or PC-H-P3 and PC-C-P5, or wiring between PC-H, R1, R2, and DC link caps.
DIAG: LOWER CAP VDC HIGH	Voltage across lower half of DC link caps went too much higher than voltage across upper half.	
DIAG: MULT. OVERCURRENTS	Too many AHF rms overcurrents	Normally, system will software limit AHF currents to rated values; however, external transient conditions could result in software limits not being responsive enough. If this occurs often, contact factory.
DIAG: PRECHARGE FAILURE	Unit failed to precharge	Check History ON/OFF to determine cause of precharge failing.

DIAG: TOO MANY ITRIPS	Too many inverter current trips	If unit is newly installed, check to make sure CTs are in the correct place. If not newly installed, and only occurs occasionally (look at On/Off history to determine how often), could be due to a high number of transients on the line (due to unstable power). If occurs multiple times, could be a system resonance problem or an internal problem due to fault in PC-C, inverter, or gate drives in inverter. If system resonance ruled out, perform low power inverter test to try to isolate problem.
DIAG: TOO MANY PTRIPS	Too many inverter pole trips	Internal problem – Inverter, gate drives, or PC-C. Perform low power inverter test to isolate problem. Look at On/Off history to determine device(s) causing the pole trips.
DIAG: CONTACTOR PROBLEM	AC contactor failed to close	Internal problem – K1, PC-C, internal current sensors, or wiring.
DIAG: AHF ISENSOR	Not enough current detected in AHF current sensors when AC contactor is closed	Internal problem – internal current sensors, K1, PC-C, wiring, or power filtering (check fuses associated with PC-T).
DIAG: LINE ISENSOR	Not enough current detected in external CTs when AC contactor is closed	External CTs may not be installed correctly or shorting bars may be installed shorting their output. Also possible internal problem, involving PC-R, PC-C, or cable connecting these 2 boards together.
DIAG: HI FREQ IN IAHF	High frequency detected in AHF current	Internal problem – PC-T failure and/or blown protection fuses (F4 – F6). Look at AHF_HFAMPS in history to determine phase(s) that caused the fault.
DIAG: DC IN IAHF	DC detected in AHF current	Could be caused by a transient line or load condition or could be due to an internal problem – IGBT device firing problem. Look at AHF_DCAMPS in history (largest value may indicate pole that device is in that is at fault)
DIAG: AHF/INV ISENSOR	Difference detected between AHF and Inverter current sensors.	Internal problem – Possible failure in either one or more current sensors CS1-CS4 or PC-C board. Look at AHF-INV RMS AMPS in history to determine phase(s) that caused the fault.
DIAG: AHF INEFFECTIVE	Diagnostic – AHF is ineffective at correcting harmonics	Problem with CTs being incorrectly positioned or a system resonance exists, resulting in current produced by AHF not effectively reducing harmonic currents in the line current. Check CTs using CT Setup LCD screen. Make sure CT physical locations (line or load side) agree with location programmed into system.
DIAG: UART TRANSMIT	Internal problem with PC-C	Contact factory
DIAG: UART RECEIVE	Internal problem with PC-C	Contact factory
DIAG: SHUTDOWNS	Too many inverter shutdowns in a short period of time	Make sure CTs are correctly positioned. Check ON/OFF history for shutdown reasons. Could be caused by temporary abnormal line power or load conditions. If persists contact factory.
DIAG: CONT. OPENINGS	Too many contactor openings in a short period of time	
DIAG: #13- DIAG: #00	Reserved diagnostic	Contact factory
DISABLED BY OPERATOR	System's power inverter disabled by operator	Press the RUN button on the touchscreen display to enable the system.
DISABLED EXTERNALLY	External disable capability selected (see section 5.6.3) and externally generated signal connected to HMI's P11 connector is disabling AHF.	Either provide correct signal to HMI's P11 connector to enable AHF or deselect external disable capability via LCD display (see section 5.6.1).
DISABLED BY NETWORK	External disable via Ethernet/IP or Modbus TCP capability selected (see section **Error! Reference ource not found.**) and enable command has not been received via Ethernet/IP or Modbus TCP	Disable this feature via the LCD front panel (see section 5.6.1) or change firmware in your PLC to send an enable to the AHF via the Ethernet/IP or Modbus TCP network. SeeTable 7.4 & Table 7.5.
LOST HMI-DSP COMM	Communications between HMI module and PC-C DSP control board in AHF has been lost	Problem with HMI module, PC-C, or cable connecting the two.
HS1 OVER-TEMPERATURE	Temperature sensor on left side of heatsink exceeded limits.	Check for dirty air filter(s) on unit. Check fans for proper operation. Check ON/OFF history to find temperatures of

HS2 OVER-TEMPERATURE	Temperature sensor on left side of heatsink exceeded limits.	all sensors. If HS1 much different from HS2, could be a bad sensor. If a sensor is very different from other sensors, could be a bad sensor. Will need to power cycle system to clear the fault.
DSP OVER-TEMPERATURE	Temperature sensor on PC-C DSP control board exceeded limits.	
GDR OVER-TEMPERATURE	Temperature sensor on PC-G or PC-GP gate drive board exceeded limits.	
+24V LOW	+24V main supply too low	+24V supply or PC-C board problem
DSP +15V LOW	+15V supply on DSP bad	PC-C board problem
DSP -15V LOW	-15V supply on DSP bad	PC-C board problem
LINE RMS VOLTS TOO LOW	Line voltage too low for unit to run.	When utility voltage returns to normal, unit will operate again. If voltage is OK, problem with PC-H, PC-C, or internal wiring.
LINE RMS VOLTS TOO HIGH	Line voltage too high for unit to run.	
LINE FREQ TOO HIGH/LOW	Frequency beyond +/- 5 Hz from nominal.	If running from a generator, check generator for proper output.
NO PHASELOCK TO LINE	System not phaselocked to AC line	None – temporary condition – Either system is in process of phaselocking to AC line or frequency of line is presently outside operational specifications.
BAD HMI NVRAM	Internal problem with HMI	Contact factory
LOST DSP-GATE DR COMM	Communications lost between PC-C and PC-G or PC-GP gate drive boards	Problem with PC-C, PC-G or PC-GP, or cables connecting them together.
GATE DR SW VERSION WRONG	Gate drive board software version incompatible with DSP software version	Contact factory to update software versions.
GATE DR CANT READ TEMPS	PC-G or PC-GP Gate drive board can't read temperatures	PC-G or PC-GP board problem
GATE DRIVE MISC PROBLEM	Misc problem found by PC-G or PC-GP gate drive bd.	PC-G or PC-GP board problem
NOT READY A-	A- IGBT gate drive problem.	24V not getting to gate drive. Power supply or other circuitry associated with that gate drive not working. For units > 100 amps, ribbon cable problem going to gate drive board on IGBT module. Problem with the IGBT module.
NOT READY A+	A+ IGBT gate drive problem.	
NOT READY B-	B- IGBT gate drive problem	
NOT READY B+	B+ IGBT gate drive problem	
NOT READY C-	C- IGBT gate drive problem	
NOT READY C+	C+ IGBT gate drive problem	
POLE TRIP A-	Pole trip received from A- IGBT	Check unit's "History" to see if more than a few of these have been occurring. If so, a possible problem with the inverter, gate drives, or PC-C board may exist.
POLE TRIP A+	Pole trip received from A+ IGBT	
POLE TRIP B-	Pole trip received from B- IGBT	
POLE TRIP B+	Pole trip received from B+ IGBT	
POLE TRIP C-	Pole trip received from C- IGBT	
POLE TRIP C+	Pole trip received from C+ IGBT	
POLE TRIP MISC	Pole trip occurred, but cause could not be determined.	Should not occur. Contact factory if it does.
SOFTWARE MISSING	Internal firmware problem	Contact factory
POWER-UP DELAY	Normal system power up delay	None – temporary condition
DSP NVRAM NOT INITIALIZED	Internal problem with PC-C	Contact factory
BAD NVRAM OPTIONS DATA	Internal problem with PC-C	Contact factory
BAD NVRAM B-SETUP DATA	Internal problem with PC-C	Contact factory
BAD NVRAM G-SETUP DATA	Internal problem with PC-C	Contact factory
BAD NVRAM K-SETUP DATA	Internal problem with PC-C	Contact factory
BAD NVRAM OFFSET DATA	Internal problem with PC-C	Contact factory
BAD NVRAM GAIN DATA	Internal problem with PC-C	Contact factory
CONTACTOR CLOSING	AC contactor K1 is in the process of closing	None - temporary condition
CONTACTOR OPENING	AC contactor K1 is in the process of opening	None – temporary condition
INVERTER TEST	System is in inverter test mode	Only occurs if test mode requested via Ethernet comm.

THYRISTOR TEST	System is in thyristor test mode	Only occurs if test mode requested via Ethernet comm.
CONTACTOR TEST	System is in contactory test mode	Only occurs if test mode requested via Ethernet comm.
VDC TEST	System is in DC voltage test mode	Only occurs if test mode requested via Ethernet comm.
DC CAP VOLTAGE TOO HIGH	DC Cap voltage went too high to continue operation	If ON/OFF history shows multiple occurrences, check external line or load CTs for proper installation. Otherwise can be a temporary condition caused by some external anomaly with the line or load. As soon as DC voltage reduces, system will start operating again.
IAHF TOO HIGH WHEN ROFF	Too much AHF current detected when AC contactor is open.	Possible internal problem with AC contactor, AHF current sensors, or PC-C. Observe AHF currents on LCD display to determine which phase problem is with.
IAHF TOO LOW WHEN RON	Not enough AHF current detected when AC contactor is closed.	None – usually a temporary condition. If condition persists, will be followed by DIAG: AHF ISENSOR indication.
LINE CURRENT TOO LOW	Not enough line current detected when AC contactor is closed and inverter not yet operating.	Some minimal line current should register when AC contactor is closed and inverter is not yet operating. If not, external CTs may not be properly located or may have shorting strips in place, shorting their output. If this is not the case, a possible internal problem could exist with PC-R, PC-I, PC-C or cables interconnecting these.
LOAD TOO LOW	Load power too low to operate	If “UNIT DISABLED IF LOAD POWER BELOW THIS %” parameter (see section **Error! Reference source ot found.**) is set to a non-zero value, system is either OFF if not previously operating of IDLE if previously operating because load power is too low. Once load power increases, unit will resume operation. This is normal operation unless the load is actually high enough but the external line/load CTs are not reading current correctly.
HW ITRIP STUCK ON	Internal problem	Problem with PC-C board.
WAITING FOR FDR TO FINISH	DSP is finishing storing FDR recorded at last shutdown	None – temporary condition
DSP IS BEING REPROGRAMMED	Dsp is being programmed with new firmware	None – temporary condition
INVERTER STARTUP TEST	Before inverter is started each time, a test on the gate drive signals between PC-C and PC-G or PC-GP is done	None – temporary condition
INVERTER START TEST FAIL	Problem with gate drive signals detected between PC-C and PC-G or PC-GP	Problem with PC-C, PC-G or PC-GP, or cables connecting the two together.
LOAD CURRENT TOO LOW	When external CTs are on load side, some load current must exist for AHF to run.	When load current exists, unit will run. If sure that load current exists, check to make sure unit is seeing load current on all 3 phases. If not, CTs may be positioned or wired incorrectly or shorting bars are shorting their output. Could also be internal problem with PC-R, PC-C or cable connecting the two.
LOAD POWER/PF TOO LOW	AHF will not run if linear load power factor (harmonic currents filtered out) is too low.	If linear load power factor is below value set in 5.6.1, AHF won’t run. Check CTs for proper placement and wiring.
UPPER>LOWER DC CAP VOLTS	Voltage across upper half of DC link caps much higher than lower half. If this continues, DIAG: UPPER CAP VDC HIGH will shut down unit.	See DIAG: UPPER CAP VDC HIGH Remedy.
LOWER>UPPER DC CAP VOLTS	Voltage across lower half of DC link caps much higher than upper half. If this continues, DIAG: LOWER CAP VDC HIGH will shut down unit.	See DIAG: LOWER CAP VDC HIGH Remedy.
HS1 HIGH-TEMPERATURE	Temperature sensor on left side of heatsink is high.	If temperature continues to climb, unit will shut down due to overtemp. Check for dirty air filter(s) on unit. Check fans for proper operation. If HS1 much different from HS2, could be a bad sensor. If a sensor is very different from other sensors, could be a bad sensor.
HS2 HIGH-TEMPERATURE	Temperature sensor on right side of heatsink is high.	
DSP HIGH-TEMPERATURE	Temperature sensor on DSP control board is high.	
GDR HIGH-TEMPERATURE	Temperature sensor on Gate drive board is high.	

9.2 SHUTDOWN HISTORY MESSAGES

A very useful tool for diagnosing problems occurring with an AHF is the “History” database storage. This function is accessed over the LCD display or Ethernet communications as indicated in sections **Error! eference source not found.** and 6.2.3. Every time an AHF starts performing current correction, an entry is created in the “ON/OFF” database, storing the date and time the AHF started. When the AHF eventually stops performing current correction, this entry in the data base is closed. At that time, the date and time the AHF stopped and the reason for the AHF having to stop is saved. Also, dozens of operating parameters (see section 5.8.1 and 5.8.2 for details) are also stored. This information can be analyzed to determine if a problem exists and if so what that problem is. This analysis can then be used to determine corrective action to fix the problem. **Error! Reference source not found.** contains shutdown reasons hat can be displayed by the “HO” history command or in the ON/OFF HISTORY display.

Table 9.2: Shutdown Reasons

Shutdown Reason	Comments	Action to Take
DIAG: UPPER CAP VDC HIGH	Voltage across upper half of DC link caps went too much higher than voltage across lower half.	Internal failure – contact factory – PC-H, PC-C, R1 (upper bleeder), R2 (lower bleeder), cables between PC-H-P6 and PC-C-P4 or PC-H-P3 and PC-C-P5, or wiring between PC-H, R1, R2, and DC link caps.
DIAG: LOWER CAP VDC HIGH	Voltage across lower half of DC link caps went too much higher than voltage across upper half.	
DIAG: MULT. OVERCURRENTS	Too many AHF rms overcurrents	Normally, system will software limit AHF currents to rated values; however, external transient conditions could result in software limits not being responsive enough. If this occurs often, contact factory.
DIAG: PRECHARGE FAILURE	Unit failed to precharge	Check verbose ON/OFF History to determine cause of precharge failing.
DIAG: TOO MANY ITRIPS	Too many inverter current trips	If unit is newly installed, check to make sure CTs are in the correct place. If not newly installed, and only occurs occasionally (look at On/Off history to determine how often), could be due to a high number of transients on the line (due to unstable power). If occurs multiple times, could be a system resonance problem or an internal problem due to fault in PC-C, inverter, or gate drives in inverter. If system resonance ruled out, perform low power inverter test to try to isolate problem.
DIAG: TOO MANY PTRIPS	Too many inverter pole trips	Internal problem – Inverter, gate drives, or PC-C. Perform low power inverter test to isolate problem. Look at On/Off history to determine device(s) causing the pole trips.
DIAG: CONTACTOR PROBLEM	AC contactor failed to close	Internal problem – K1, PC-C, internal current sensors, or wiring.
DIAG: AHF ISENSOR	Not enough current detected in AHF current sensors when AC contactor was closed	Internal problem – internal current sensors, K1, PC-C, wiring, or power filtering (check fuses associated with PC-T).
DIAG: LINE ISENSOR	Not enough current detected in external CTs when AC contactor was closed	External CTs may not be installed correctly or shorting bars may be installed shorting their output. Also possible internal problem, involving PC-R, PC-C, or cable connecting these 2 boards together.
DIAG: HI FREQ IN IAHF	High frequency detected in AHF current	Internal problem – PC-T failure and/or blown protection fuses (F4 – F6). Look at AHF_HFAMPS in history to determine phase(s) that caused the fault.
DIAG: DC IN IAHF	DC detected in AHF current	Could be caused by a transient line or load condition or could be due to an internal problem – IGBT device firing problem. Look at AHF_DCAMPS in history (largest value may indicate pole that device is in that is at fault)
DIAG: AHF/INV ISENSOR	Difference detected between AHF and Inverter current sensors.	Internal problem – Possible failure in either one or more current sensors CS1-CS4 or PC-C board. Look at AHF-INV RMS AMPS in history to determine phase(s) that caused the fault.

DIAG: AHF INEFFECTIVE	Diagnostic – AHF was ineffective at correcting harmonics	Problem with CTs being incorrectly positioned or a system resonance exists, resulting in current produced by AHF not effectively reducing harmonic currents in the line current. Check CTs using CT Setup LCD screen. Make sure CT physical locations (line or load side) agree with location programmed into system.
DIAG: UART TRANSMIT	Internal problem with PC-C	Contact factory
DIAG: UART RECEIVE	Internal problem with PC-C	Contact factory
DIAG: SHUTDOWNS	Too many inverter shutdowns in a short period of time	Make sure CTs are correctly positioned. Check ON/OFF history for shutdown reasons. Could be caused by temporary abnormal line power or load conditions. If persists contact factory.
DIAG: CONT. OPENINGS	Too many contactor openings in a short period of time	
DIAG: #13- DIAG: #00	Reserved diagnostics	Contact factory
DISABLED BY OPERATOR	System's power inverter disabled by operator	Press the RUN button on the touchscreen display to re-enable the system.
DISABLED EXTERNALLY	External disable capability selected (see section 5.6.3) and externally generated signal connected to HMI's P11 connector disabled the AHF.	None. If feature is no longer wanted disable (see section 5.6.3).
DISABLED BY NETWORK	External disable via Ethernet/IP or Modbus TCP capability selected (see section 5.6.3) and disable command was received via Ethernet/IP or Modbus TCP	None. If feature is no longer wanted disable (see section 5.6.3).
LOST HMI-DSP COMM	Communications between HMI module and PC-C DSP control board in AHF was lost	Problem with HMI module, PC-C, or cable connecting the two.
HS1 OVER-TEMPERATURE	Temperature sensor on left side of heatsink exceeded limits.	Check for dirty air filter(s) on unit. Check fans for proper operation. Check verbose ON/OFF history to find temperatures of all sensors. If HS1 much different from HS2, could be a bad sensor. If a sensor is very different from other sensors, could be a bad sensor.
HS2 OVER-TEMPERATURE	Temperature sensor on left side of heatsink exceeded limits.	
DSP OVER-TEMPERATURE	Temperature sensor on PC-C DSP control board exceeded limits.	
GDR OVER-TEMPERATURE	Temperature sensor on PC-G or PC-GP gate drive board exceeded limits.	
+24V LOW	+24V main supply too low	+24V supply or PC-C board problem
DSP +15V LOW	+15V supply on DSP bad	PC-C board problem
DSP -15V LOW	-15V supply on DSP bad	PC-C board problem
LINE RMS VOLTS TOO LOW	Line voltage too low for unit to run.	Utility voltage went out of range
LINE RMS VOLTS TOO HIGH	Line voltage too high for unit to run.	
LINE FREQ TOO HIGH/LOW	Frequency beyond +/- 5 Hz from nominal.	Frequency of utility voltage went out of range
NO PHASELOCK TO LINE	System not phaselocked to AC line	Voltage or Frequency of utility voltage went out of range or frequency changed very rapidly.
BAD HMI NVRAM	Internal problem with HMI	Contact factory
LOST DSP-GATE DR COMM	Internal problem with PC-C	Contact factory
GATE DR SW VERSION WRONG	Gate drive board software version incompatible with DSP software version	Contact factory to update software versions.
GATE DR CANT READ TEMPS	PC-G or PC-GP Gate drive board can't read temperatures	PC-G or PC-GP board problem
GATE DRIVE MISC PROBLEM	Misc problem found by PC-G or PC-GP gate drive bd.	PC-G or PC-GP board problem
NOT READY A-	A- IGBT gate drive problem.	24V not getting to gate drive. Power supply or other circuitry associated with that gate drive not working. For units > 100 amps, ribbon cable problem going to gate drive board on IGBT module.
NOT READY A+	A+ IGBT gate drive problem.	
NOT READY B-	B- IGBT gate drive problem	

NOT READY B+	B+ IGBT gate drive problem	Problem with the IGBT module. Check unit's "History" to see if an inordinate number of these have been occurring
NOT READY C-	C- IGBT gate drive problem	
NOT READY C+	C+ IGBT gate drive problem	
POLE TRIP A-	Pole trip received from A- IGBT	Check unit's "History" to see if an inordinate number of these have been occurring. If so, a possible problem with the inverter, gate drives, or PC-C board may exist.
POLE TRIP A+	Pole trip received from A+ IGBT	
POLE TRIP B-	Pole trip received from B- IGBT	
POLE TRIP B+	Pole trip received from B+ IGBT	
POLE TRIP C-	Pole trip received from C- IGBT	
POLE TRIP C+	Pole trip received from C+ IGBT	
POLE TRIP MISC	Pole trip occurred, but cause could not be determined.	Should not occur. Contact factory if it does.
UNKNOWN PWM CAUSE		Should not occur. Contact factory if it does.
VDC TOO HIGH	Inverter DC capacitor voltage went too high	If ON/OFF history shows multiple occurrences, check external line or load CTs for proper installation. Otherwise can be a temporary condition caused by some external anomaly with the line or load. As soon as DC voltage reduces, system starts operating again.
VDC TOO LOW	Inverter DC capacitor voltage dropped too low	Most likely due to a transient condition with the line voltage or load.
HW CURRENT TRIP	Hardware current trip occurred	Normally, software limits AHF current; however, line voltage transients or large load changes can result in hardware limits being reached. Contact factory if inordinate numbers of these are seen in the ON/OFF history.
VAC PEAK VOLTAGE TOO LOW	Line voltage peak voltage too low.	Most likely due to a transient condition with the line voltage.
VDC TEST MODE ENTERED	Vdc test mode selected by operator.	Only occurs if test mode requested via Ethernet comm.
AHF CURRENTS TOO LOW		Should not occur. Contact factory if it does.
LINE CURRENTS TOO LOW		Should not occur. Contact factory if it does.
AHF CURRENTS TOO HIGH	AHF Rms currents exceeded rating for too long	Most likely due to a line voltage transient condition or very large load change.
AHF CURRENTS VERY HIGH	AHF Rms currents greatly exceeded rating for too long	
LINE HIGHER THAN LOAD CURRENTS		Should not occur. Contact factory if it does.
AHF HIGHER THAN LOAD CURRENTS		Should not occur. Contact factory if it does.

If unit fails to precharge, the shutdown reason in the On/Off history for the event will start with the text "PRECHARGE FAIL". The last line of the verbose ON/OFF history records contains values acquired during the precharge portion of starting up and contains additional troubleshooting information. A precharge failure can be caused by many of the shutdown reasons shown in Table 9.2. In addition, the following Table contains additional shutdown reasons that can occur only during precharge. Sometimes precharging can occasionally fail due to a temporary transient occurring on the AC line. Such occasional failures will be recorded in the On/Off History and be followed by additional attempts to precharge. If additional attempts also fail, a diagnostic is declared. Occasionally seeing precharge failures may not be a problem; however, persistent failures may be. In the following table, items not marked with any "Action to Take" fall in that category. The factory should be contacted if persistent precharge failures are observed.

Table 9.3: Additional Shutdown Reasons that Only Occur During Precharge

Shutdown Reason	Comments	Action to Take

UPPER CAP VDC TOO HIGH	Voltage on upper half of DC capacitance exceeded limits	Internal problem. Contact factory.
LOWER CAP VDC TOO HIGH	Voltage on lower half of DC capacitance exceeded limits	Internal problem. Contact factory.
LESS THAN 10% VDC ATTAINED	Unable to charge DC capacitance beyond 10%	Check verbose ON/OFF history for failed precharge event. If MAX AMPS or AVG AMPS in last line (precharge info line) is less than 1 amp, check fuse F4 on PC-H. If fuse is open, replace. If fuse fails again, problem with PC-H, PC-C, or wiring.
PRECHARGE TIMED OUT	Unable to fully charge DC capacitance in allotted time.	
VAB PEAK CALC TOO LOW	Peak of line voltage too low	
VAB PEAK CALC TOO HIGH	Peak of line voltage too high	
AHF CURRENTS WENT TOO HIGH	AHF rms currents too high	
VAB TOO LOW AT THYRISTOR TIME	Line voltage too low when time to turn on thyristor	
VAB TOO HIGH AT THYRISTOR TIME	Line voltage too high when time to turn on thyristor	

If unit precharges but encounters a problem while closing the AC contactor, the shutdown reason in the On/Off history for the event will start with the text “ACC FAIL”. An AC contactor failure can be caused by many of the shutdown reasons shown in Table 9.2. In addition, the following Table contains additional shutdown reasons that can occur only during the closure of the AC contactor.

Table 9.4: Additional Shutdown Reasons that Only Occur During AC Contactor Closures

Shutdown Reason	Comments	Action to Take
NO IAHF WHILE CLOSING ACC	AHF current not observed in 1 or more phases during attempt to close AC Contactor.	Either K1 failed to close in a timely fashion, PC-C problem, or wiring problem is to blame. Check verbose ON/OFF history record for AHF currents at time of failure.
IAHF TOO LOW WITH ACC CLOSED	Insufficient AHF rms current observed in 1 or more phases when AC Contactor closed.	After AC Contactor closes, but prior to starting the inverter, the AC capacitors in the AHF’s power filtering should draw some minimal current. If such current doesn’t materialize, could be due to failure in the filtering (check fuses associated with PC-T, AC capacitors and components on PC-T) Also, could be due to an internal current sensor or PC-C failure. Check verbose ON/OFF history record for AHF currents at time of failure.
ACC ON WITH AHF OFF TOO LONG	Once AC Contactor closed, something happened so that system could not continue on to start inverter within a timeout period.	Unlikely to happen. If it does, a subsequent retry should fix the situation.

9.3 RESET HISTORY MESSAGES

Another useful tool for diagnosing problems occurring with an AHF is the RESET HISTORY database storage. This function is accessed over the LCD display or Ethernet communications as indicated in sections 5.8.3 and **Error! Reference source not found.**. Every time the DSP control board resets, an ntry is created in the “RESET” database, storing a reset “event number”, the date and time the reset occurs, and the reason for the reset. The following table contains the possible “Reset Reasons” that can be recorded. The vast majority of the resets will be “Power-up” resets. Every time power is applied to the AHF the DSP control board resets and records the reason as “Power-up”. Reset Reasons that do not list an “Action to Take” could occasionally occur due to electrical noise or other unusual transient condition. If several of these start showing up in the Reset History, the factory should be contacted as there may be a problem with the PC-C board.

Concerning “L1 DIAG” through “L4 DIAG” resets, as indicated in the following table, these are resets that occur after a “diagnostic” condition is detected. A “diagnostic” condition is serious enough to keep the

unit from restarting; however, a remedy is provided to allow the system to wait a period of time (in case problem is due to an external event that is transitory in nature), and then reset itself and try to restart up to a certain number of times. Presently, up to 2 levels of “diagnostic” resets can occur before the unit will stop resetting and remain in the off (due to a diagnostic condition) state. This means a if the same diagnostic condition occurs a third time, the unit will stop trying to operate. Note that if the system successfully recovers following a reset, and operates without a diagnostic occurring for a period of time, those previous diagnostics will be “forgiven” meaning that the diagnostic level will be lowered one level for each period of time it operates without problems.

To determine the cause of the diagnostic conditions, the RESET HISTORY and the ON/OFF HISTORY data bases can be viewed.

Table 9.5: Reset Reasons

Reset Reason	Comments	Action to Take
POWER-UP	Normal reason that occurs every time AHF controls are powered up.	None – normal occurrence
HARDWARE WATCHDOG	In case processor gets “lost” a hardware watchdog timer will reset it to “bring it back”.	
FLASH REPROGRAMMED	Occurs if DSP Control board is reprogrammed with firmware.	None – normal occurrence
SIMULATED	Should not see this, as it is the result of a factory procedure.	
LOW PWM/RTC EXECUTION RATIO	Various reasons that processor had to be reset due to certain procedures not being executed at the proper time.	
HIGH PWM/RTC EXECUTION RATIO		
VOLTAGE A/D PROBLEM		
BAD CONTROL STATE		
L1 DIAG: followed by a diagnostic reason	If a problem persists that is detrimental to the continued operation of the unit, a diagnostic is declared. The first time a diagnostic is declared, a L1 (level 1) diagnostic reset occurs in a short period of time in hopes that a short delay and/or system reset will fix the problem. If that same diagnostic condition occurs again within a short period of time, a L2 (level 2) diagnostic reset occurs after a bit longer period of time. This can continue to a level 3 and level 4. Once the maximum level is attained and the same diagnostic occurs again, the system will not reset again and will instead remain off until power is cycled off and on. (see notes in text for additional info)	If several of these resets start to be found, the problem should be investigated. If you get to the final level and system stays off, power can be cycled off and on to clear the problem; however, if problem re-occurs, do not keep cycling power as doing so could result in system damage. Call factory instead.
L2 DIAG: followed by a diagnostic reason		
L3 DIAG: followed by a diagnostic reason		
L4 DIAG: followed by a diagnostic reason		

9.4 TROUBLESHOOTING THE FRONT PANEL HMI DISPLAY

The HMI is equipped with a reset button on the front panel. The reset button is useful if the HMI display gets stuck due to some internal issue. For example if you touch a button on the touchscreen and expect an action to occur, and this action does not occur, i.e. pressing the MENU button on the OPERATING STATUS display does not open the MENU display, pressing the reset button will usually solve the issue.

See section 3.5.6 for how to access the reset button by removing the cover on the front panel.

The front panel HMI can sometimes automatically reset if there is an issue with the Ethernet communications, USB communications, touchscreen, display, or another HMI related issue. When the HMI resets, the AHF will stop operating momentarily if its presently running. The HMI reset will cause the HPS TruWave splashscreen (see section **Error! Reference source not found.** of this manual) to e displayed along with the HMI reset reason on the bottom of the splashscreen. Note: pressing the reset button does not cause a message to be displayed on the bottom of the splashscreen as this is considered a normal power up reset.

Table 9.6 lists the possible HMI reset reason messages and actions to take to solve the issue.

Table 9.6: HMI Reset Reasons

Reset Reason	Comments	Action to Take
EXTERNAL HMI RESET	HMI was reset by external source	You will normally never see this message
HMI-DSP LOST COMMS	This may happen due to noise on PC-C or HMI, if the noise goes away, the HMI will stop resetting	If this keeps happening for about 10 minutes or more, contact the factory.
USART RX DMA FAIL	Internal problem with PC-C	Contact factory
USART TX DMA FAIL	Internal problem with PC-C	Contact factory
TOUCHSCREEN ERROR	Front panel touchscreen hardware error	Contact factory
USB ENUMERATE FAIL	This will happen if there is a bad connection between the flash drive and the USB port	Remove the flash drive and plug it back in to the USB port making sure there is a good connection. If this does not solve the issue, contact the factory.
USB COMMS STUCK DURING FDR	There may be a bad connection between the flash drive and USB port or other flash drive internal issue.	Exit the History FDR screen. Remove the flash drive and plug it back in to the USB port making sure there is a good connection. If this keeps happening, try another flash drive or contact the factory
USB ENUMERATE FAIL DURING UPDATE FIRMWARE	This will happen if there is a bad connection between the flash drive and the USB port	Remove the flash drive and plug it back in to the USB port making sure there is a good connection. If this does not solve the issue, contact the factory.
FLASH DRIVE DIRECTORY CANT BE READ	Internal flash drive error	Try another flash drive or contact the factory
USB COMMS STUCK WHILE READING BIN FILE	Internal flash drive error	Try another flash drive or contact the factory
USB FAT FILE SYSTEM ERROR	Internal flash drive error	Try another flash drive or contact the factory
I2C STUCK WHILE READING ETHERNET ADDRESS	Internal HMI error	Contact the factory
ETHERNET MAC CORE ERROR	Internal HMI error	Contact the factory
ETHERNET PHY READ ERROR	Internal HMI error	Contact the factory
ETHERNET PHY WRITE ERROR	Internal HMI error	Contact the factory
USB CORE RESET FAILED	This may happen if there is a bad connection between the flash drive and the USB port	Remove the flash drive and plug it back in to the USB port making sure there is a good connection. If this does not solve the issue, contact the factory.
FLASH MEM ERROR,HMI WAS NOT PROGRAMMED	Error occurred while updating HMI firmware	Contact the factory
HMI SOFTWARE WATCHDOG	HMI operation got stuck and automatically recovered	The error was automatically fixed by the HMI. If no further issues are observed, no action is needed.
HARDWARE WATCHDOG RESET	HMI operation got stuck and automatically recovered	The error was automatically fixed by the HMI. If no further issues are observed, no action is needed.
HMI POWER-UP	HMI powered up normally	This message is only visible in DIAGNOSTIC DATA display
HMI FIRMWARE UPDATED	HMI firmware was successfully updated with the USB flash drive	The HMI firmware was just updated with the latest firmware. See section 5.11.1 for more information

10. AHF SPECIFICATIONS AND DRAWINGS

Note: Specifications are subject to change

Table 10.1: Specifications for 50 Amp AHF
voltage rating of unit (240 or 480)

Parameter	Symbol	Condition	Min.	Nom.	Max.	Unit
Power (3Φ Delta):						
RMS Voltage (Line-to-line)	V_{line}	240 in part# & 208 selected as nom volt.	177	208	233	Volts
Frequency	F_{line}		55	60	65	Hz
RMS Voltage (Line-to-line)	V_{line}	240 in part# & 240 selected as nom volt.	204	240	269	Volts
Frequency	F_{line}		55	60	65	Hz
RMS Voltage (Line-to-line)	V_{line}	480 in part# & 400 selected as nom volt.	340	400	448	Volts
Frequency	F_{line}		45	50	55	Hz
RMS Voltage (Line-to-line)	V_{line}	480 in part# & 480 selected as nom volt.	408	480	538	Volts
Frequency	F_{line}		55	60	65	Hz
Correction Current (see note 1)	I_{AHF} (rms)	Average of all 3 phases			50	Amps
Correction Current	I_{AHF} (rms)	Any single phase			52.5	Amps
Correction Current	I_{AHF} (peak)	Any phase	-150		+150	Amps
Full load Efficiency	Eff	I_{AHF}(rms)= Max., V_{line}= Nom		98		%
Full load Losses	P_{Loss}			900		Watts
Performance:						
Resultant Line Current Distortion (see notes 1 & 2)	I_{line} thdr	I_{load} harmonics = I_{AHF} Max.		3.0	5.0	%thdr
Resultant Power Factor (linear correction enabled)	I_{line} pf	I_{load} harmonics and reactive < I_{AHF} Max.	0.998			
Physical:						
Operating Temperature	T_{oper}	Ambient (see note 3)	0		40	°C
Storage Temperature	T_{st}	Ambient	-20		60	°C
Altitude above sea level	Alt	(see note 3)			5000	ft
Audible Noise produced					60	dBA
Type 1 Enclosed:	50A					
Enclosure Height	Power switch protrudes 2.13” out from front surface of enclosure. Height does not include 1” air filter on bottom of unit. See drawings that follow for additional dimensions.				53	inches
Enclosure Width					21	inches
Enclosure Depth					14.25	inches
Panel Weight					230	lbs.
Open Panel:	50A					
Panel Height	Depth of panel varies – only maximum depth is shown in this table (depth may need to increase 0.25” for screws protruding out of panel). See drawings that follow for additional dimensions.				45	inches
Panel Width					16.9	inches
Panel Depth					12.71	inches
Panel Weight					135	lbs.
Cabinet Air flow needed	Supplied by Integrator		375			cfm

Table 10.2: Specifications for 100 Amp AHF voltage rating of unit (240 or 480)						
Parameter	**Symbol**	**Condition**	**Min.**	**Nom.**	**Max.**	**Unit**
Power (3Φ Delta):						
RMS Voltage (Line-to-line)	V_{line}	240 in part# & 208 selected as nom volt.	177	208	233	Volts
Frequency	F_{line}		55	60	65	Hz
RMS Voltage (Line-to-line)	V_{line}	240 in part# & 240 selected as nom volt.	204	240	269	Volts
Frequency	F_{line}		55	60	65	Hz
RMS Voltage (Line-to-line)	V_{line}	480 in part# & 400 selected as nom volt.	340	400	448	Volts
Frequency	F_{line}		45	50	55	Hz
RMS Voltage (Line-to-line)	V_{line}	480 in part# & 480 selected as nom volt.	408	480	538	Volts
Frequency	F_{line}		55	60	65	Hz
Correction Current (see note 1)	I_{AHF} (rms)	Average of all 3 phases			100	Amps
Correction Current	I_{AHF} (rms)	Any single phase			105	Amps
Correction Current	I_{AHF} (peak)	Any phase	-300		+300	Amps
Full load Efficiency	Eff	I_{AHF}(rms)= Max., V_{line}= Nom		98		%
Full load Losses	P_{Loss}			1700		Watts
Performance:						
Resultant Line Current Distortion (see notes 1 & 2)	I_{line} pf	I_{load} harmonics = I_{AHF} Max.		3.0	5.0	%thdr
Resultant Power Factor (linear correction enabled)		I_{load} harmonics and reactive < I_{AHF} Max.	0.998			
Physical:						
Operating Temperature	T_{oper}	Ambient (see note 3)	0		40	°C
Storage Temperature	T_{st}	Ambient	-20		60	°C
Altitude above sea level	Alt	(see note 3)			5000	ft
Audible Noise produced					60	dBA
Type 1 Enclosed:	100A unit					
Enclosure Height	Power switch protrudes 2.13” out from front surface of enclosure. Height does not include 1” air filter on bottom of unit. See drawings that follow for additional dimensions.				53	inches
Enclosure Width					21	inches
Enclosure Depth					14.25	inches
Panel Weight					270	lbs.
Open Panel:	100A unit					
Panel Height	Depth of panel varies – only maximum depth is shown in this table (depth may need to increase 0.25” for screws protruding out of panel). See drawings that follow for additional dimensions.				45	inches
Panel Width					12.9	inches
Panel Depth					12.83	inches
Panel Weight					175	lbs.
Cabinet Air flow needed	Supplied by Integrator		500			cfm

Table 10.3: Specifications for 150 Amp AHF voltage rating of unit (240 or 480)						
Parameter	**Symbol**	**Condition**	**Min.**	**Nom.**	**Max.**	**Unit**
Power (3Φ Delta):						
RMS Voltage (Line-to-line)	V_{line}	240 in part# & 208 selected as nom volt.	177	208	233	Volts
Frequency	F_{line}		55	60	65	Hz
RMS Voltage (Line-to-line)	V_{line}	240 in part# & 240 selected as nom volt.	204	240	269	Volts
Frequency	F_{line}		55	60	65	Hz
RMS Voltage (Line-to-line)	V_{line}	480 in part# & 400 selected as nom volt.	340	400	448	Volts
Frequency	F_{line}		45	50	55	Hz
RMS Voltage (Line-to-line)	V_{line}	480 in part# & 480 selected as nom volt.	408	480	538	Volts
Frequency	F_{line}		55	60	65	Hz
Correction Current (see note 1)	I_{AHF} (rms)	Average of all 3 phases			150	Amps
Correction Current	I_{AHF} (rms)	Any single phase			157.5	Amps
Correction Current	I_{AHF} (peak)	Any phase	-450		+450	Amps
Full load Efficiency	Eff	I_{AHF}(rms)= Max., V_{line}= Nom		98		%
Full load losses	P_{Loss}			2500		Watts
Performance:						
Resultant Line Current Distortion (see notes 1 & 2)	I_{line} pf	I_{load} harmonics = I_{AHF} Max.		3.0	5.0	%thdr
Resultant Power Factor (linear correction enabled)		I_{load} harmonics and reactive < I_{AHF} Max.	0.998			
Physical:						
Operating Temperature	T_{oper}	Ambient (see note 3)	0		40	°C
Storage Temperature	T_{st}	Ambient	-20		60	°C
Altitude above sea level	Alt	(see note 3)			5000	ft
Audible Noise produced					65	dBA
Type 1 Enclosed:	150A unit					
Enclosure Height	Power switch protrudes 2.13” out from front surface of enclosure. Height does not include 1” air filter on bottom of unit. See drawings that follow for additional dimensions.				63.5	inches
Enclosure Width					27	inches
Enclosure Depth					16.5	inches
Panel Weight					440	lbs.
Open Panel:	150A unit					
Panel Height	Depth of panel varies – only maximum depth is shown in this table (depth may need to increase 0.25” for screws protruding out of panel). See drawings that follow for additional dimensions.				54	inches
Panel Width					22	inches
Panel Depth					12.54	inches
Panel Weight					245	lbs.
Cabinet Air flow needed	Supplied by Integrator		800			cfm

Table 10.4: Specifications for 200 Amp AHF voltage rating of unit (240 or 480)						
Parameter	**Symbol**	**Condition**	**Min.**	**Nom.**	**Max.**	**Unit**
Power (3Φ Delta):						
RMS Voltage (Line-to-line)	V_{line}	240 in part# & 208 selected as nom volt.	177	208	233	Volts
Frequency	F_{line}		55	60	65	Hz
RMS Voltage (Line-to-line)	V_{line}	240 in part# & 240 selected as nom volt.	204	240	269	Volts
Frequency	F_{line}		55	60	65	Hz
RMS Voltage (Line-to-line)	V_{line}	480 in part# & 400 selected as nom volt.	340	400	448	Volts
Frequency	F_{line}		45	50	55	Hz
RMS Voltage (Line-to-line)	V_{line}	480 in part# & 480 selected as nom volt.	408	480	538	Volts
Frequency	F_{line}		55	60	65	Hz
Correction Current (see note 1)	I_{AHF} (rms)	Average of all 3 phases			200	Amps
Correction Current	I_{AHF} (rms)	Any single phase			210	Amps
Correction Current	I_{AHF} (peak)	Any phase	-600		+600	Amps
Full load Efficiency	Eff	I_{AHF}(rms)= Max., V_{line}= Nom		98		%
Full load losses	P_{Loss}			3300		Watts
Performance:						
Resultant Line Current Distortion (see notes 1 & 2)	I_{line} pf	I_{load} harmonics = I_{AHF} Max.		3.0	5.0	%thdr
Resultant Power Factor (linear correction enabled)		I_{load} harmonics and reactive < I_{AHF} Max.	0.998			
Physical:						
Operating Temperature	T_{oper}	Ambient (see note 3)	0		40	°C
Storage Temperature	T_{st}	Ambient	-20		60	°C
Altitude above sea level	Alt	(see note 3)			5000	ft
Audible Noise produced					65	dBA
Type 1 Enclosed:	200A unit					
Enclosure Height	Power switch protrudes 2.13” out from front surface of enclosure. Height does not include 1” air filter on bottom of unit. See drawings that follow for additional dimensions.				63.5	inches
Enclosure Width					27	inches
Enclosure Depth					16.5	inches
Panel Weight					480	lbs.
Open Panel:	200A unit					
Panel Height	Depth of panel varies – only maximum depth is shown in this table (depth may need to increase 0.25” for screws protruding out of panel). See drawings that follow for additional dimensions.				54	inches
Panel Width					22	inches
Panel Depth					13.54	inches
Panel Weight					280	lbs.
Cabinet Air flow needed	Supplied by Integrator		900			cfm

Table 10.5: Specifications for 300 Amp AHF voltage rating of unit (240 or 480)						
Parameter	**Symbol**	**Condition**	**Min.**	**Nom.**	**Max.**	**Unit**
Power (3Φ Delta):						
RMS Voltage (Line-to-line)	V_{line}	240 in part# & 208 selected as nom volt.	177	208	233	Volts
Frequency	F_{line}		55	60	65	Hz
RMS Voltage (Line-to-line)	V_{line}	240 in part# & 240 selected as nom volt.	204	240	269	Volts
Frequency	F_{line}		55	60	65	Hz
RMS Voltage (Line-to-line)	V_{line}	480 in part# & 400 selected as nom volt.	340	400	448	Volts
Frequency	F_{line}		45	50	55	Hz
RMS Voltage (Line-to-line)	V_{line}	480 in part# & 480 selected as nom volt.	408	480	538	Volts
Frequency	F_{line}		55	60	65	Hz
Correction Current (see note 1)	I_{AHF} (rms)	Average of all 3 phases			300	Amps
Correction Current	I_{AHF} (rms)	Any single phase			315	Amps
Correction Current	I_{AHF} (peak)	Any phase	-900		+900	Amps
Full load Efficiency	Eff	I_{AHF}(rms)= Max., V_{line}= Nom		98		%
Full load losses	P_{Loss}			5100		Watts
Performance:						
Resultant Line Current Distortion (see notes 1 & 2)	I_{line} thdr	I_{load} harmonics = I_{AHF} Max.		3.0	5.0	%thdr
Resultant Power Factor (linear correction enabled)	I_{line} pf	I_{load} harmonics and reactive < I_{AHF} Max.	0.998			
Physical:						
Operating Temperature	T_{oper}	Ambient (see note 3)	0		40	°C
Storage Temperature	T_{st}	Ambient	-20		60	°C
Altitude above sea level	Alt	(see note 3)			5000	ft
Audible Noise produced					65	dBA
Type 1 Enclosed:	300A unit					
Enclosure Height	Power switch protrudes 1.75” out from front surface of enclosure. See drawings that follow for additional dimensions.				75	inches
Enclosure Width					33	inches
Enclosure Depth					18	inches
Panel Weight					630	lbs.
Open Panel:	300A unit					
Panel Height	Depth of panel varies – only maximum depth is shown in this table (depth may need to increase 0.25” for screws protruding out of panel). See drawings that follow for additional dimensions.				56	inches
Panel Width					27	inches
Panel Depth					13.56	inches
Panel Weight					400	lbs.
Cabinet Air flow needed			1300			cfm

Notes pertaining to all previous specification tables:

1. System will automatically current limit at max. rms and peak values shown. If load requires correction exceeding these values, excess amount will come from utility. This automatic limiting will allow the system to continuously run at max. output, providing its maximum amount of correction; however, the line current (I_{line}) thdr will increase as the excess current that is needed increases, and will soon exceed the max. %thdr listed.
2. Depending on the severity of the harmonic currents drawn by the load, and how loaded the AHF is, the resultant line current distortion will vary. The maximum 5% THDR shown is achievable down to as low as 15-20% AHF loading for normal loads (30-35% THDR). Higher distorted loads will require the AHF to be loaded a bit more to attain the 5% max. line THDR.

3. Standard maximum operating ambient room temperature is 40 degrees C. On request, if higher ambient temperatures are anticipated, systems can be configured for operating in up to a 50 degree C room ambient. Above 40 degrees, system will “self de-rate” at about 2.5% per degree, so that when the room ambient is at 50 degrees, system will limit itself to produce about 75% of its rated output current. When operating at 40 degrees or lower, system will produce full rated current. Also, equipment can operate at higher altitudes at full rated current if ambient operating temperature is kept lower than 40C. At ambient temperatures approaching 40 C and higher altitudes, system will “self de-rate” its output current, thus allowing operation to continue, but at a reduced maximum current. It is not recommended to operate at both higher altitudes and higher than 40C ambient temperatures.

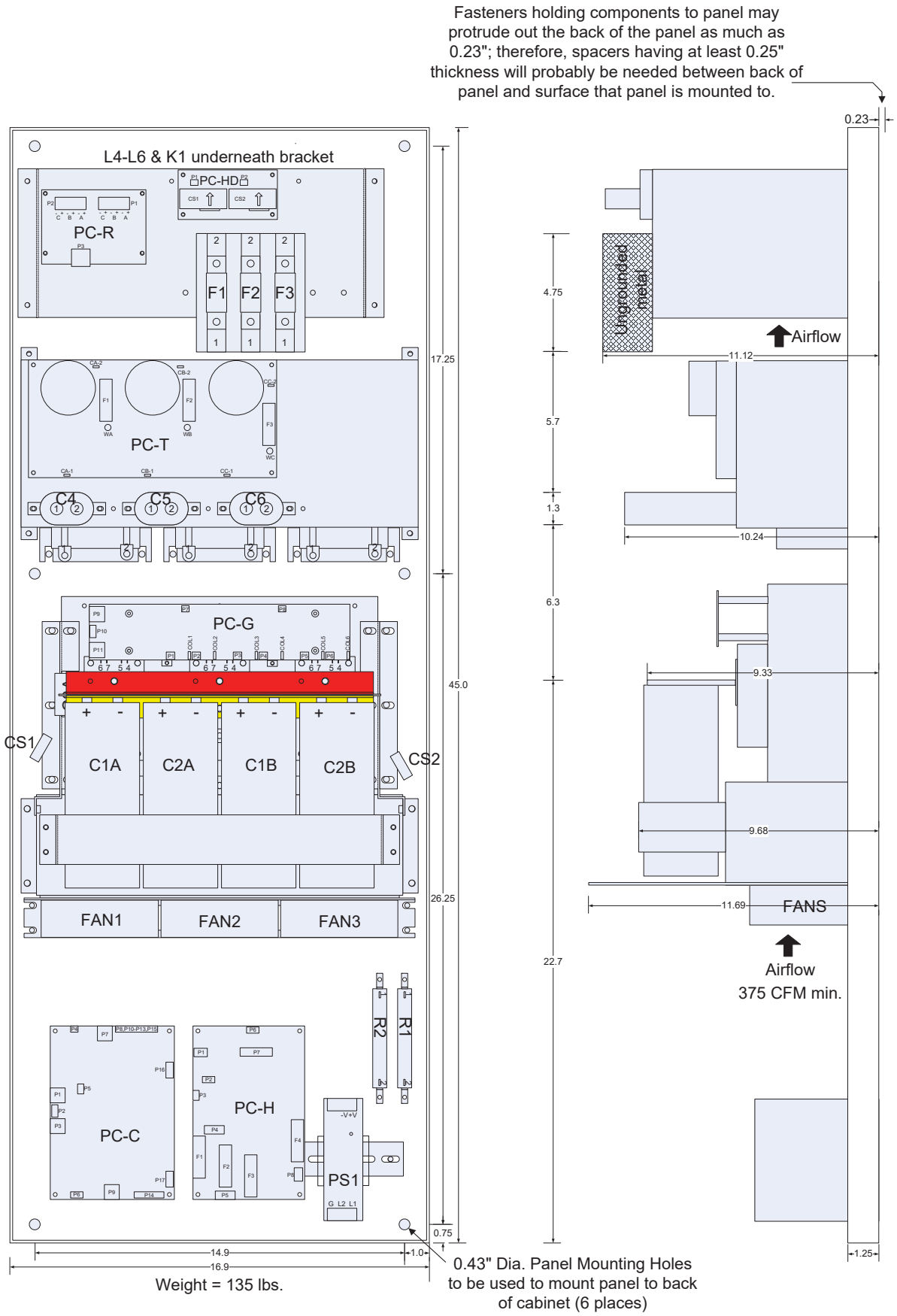

Figure 10.1: 50 Amp AHF Panel Layout Drawings

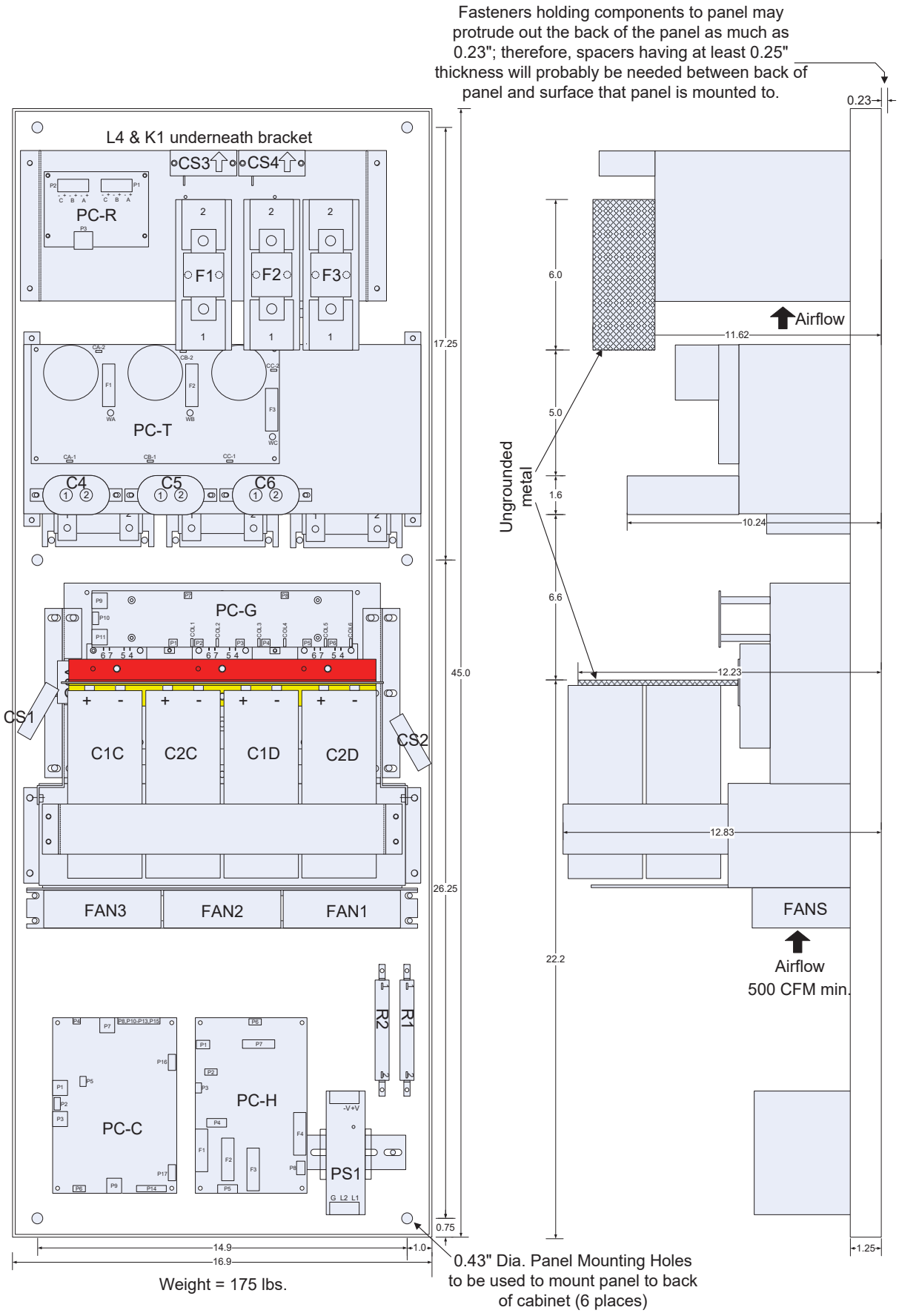

Figure 10.2: 100 Amp AHF Panel Layout Drawings

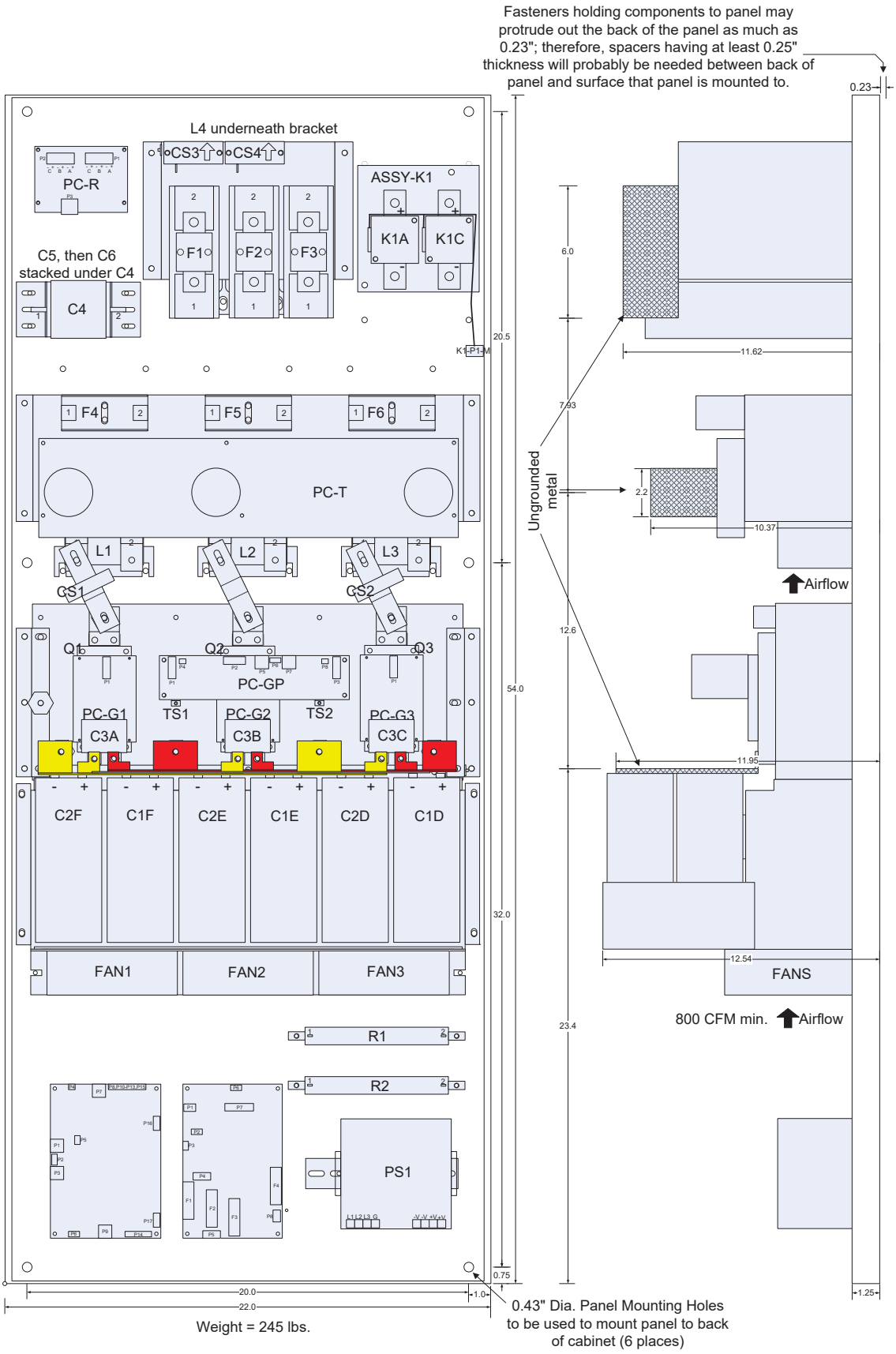

Figure 10.3: 150 Amp AHF Panel Layout Drawings

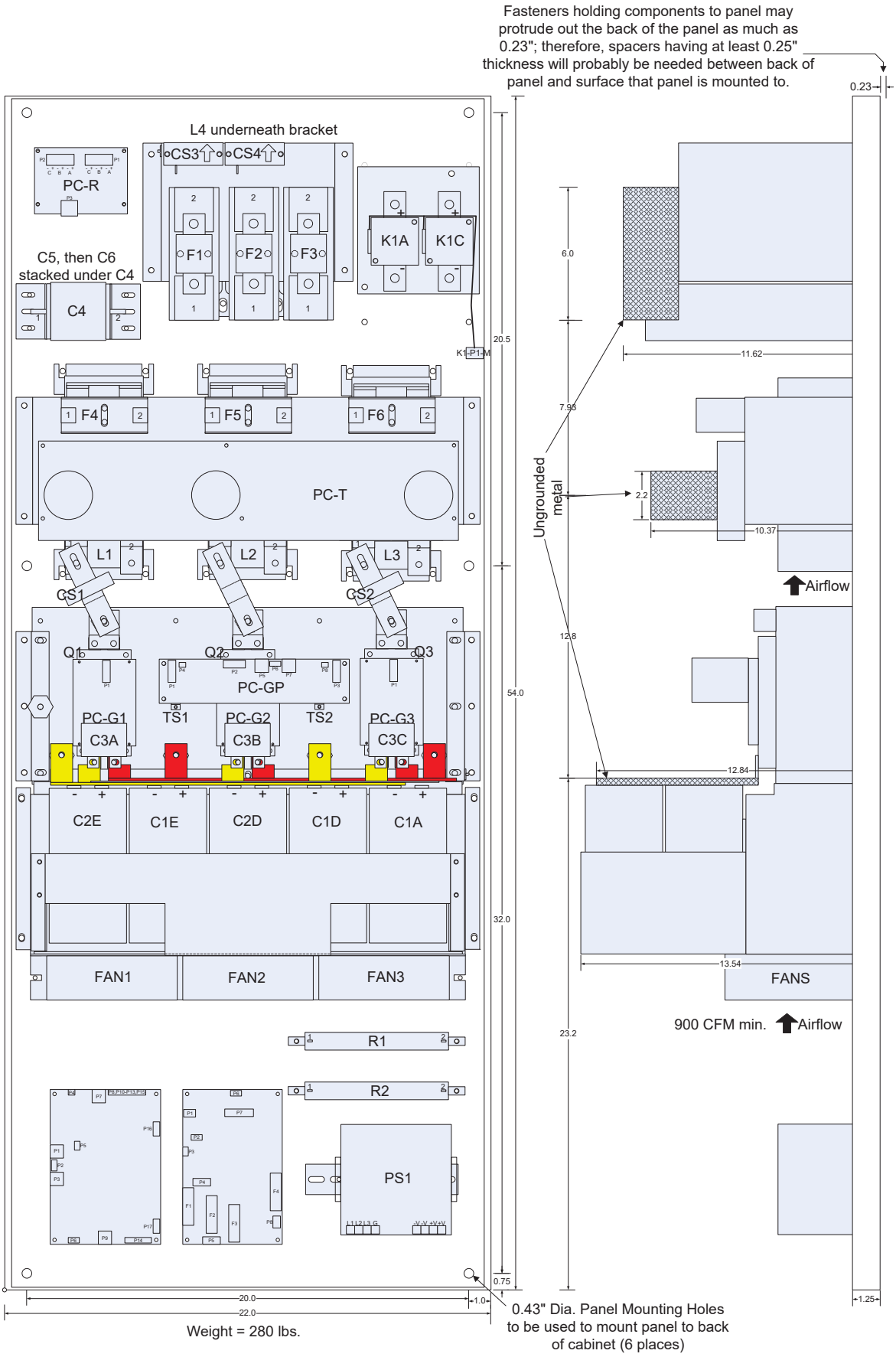

Figure 10.4: 200 Amp AHF Panel Layout Drawings

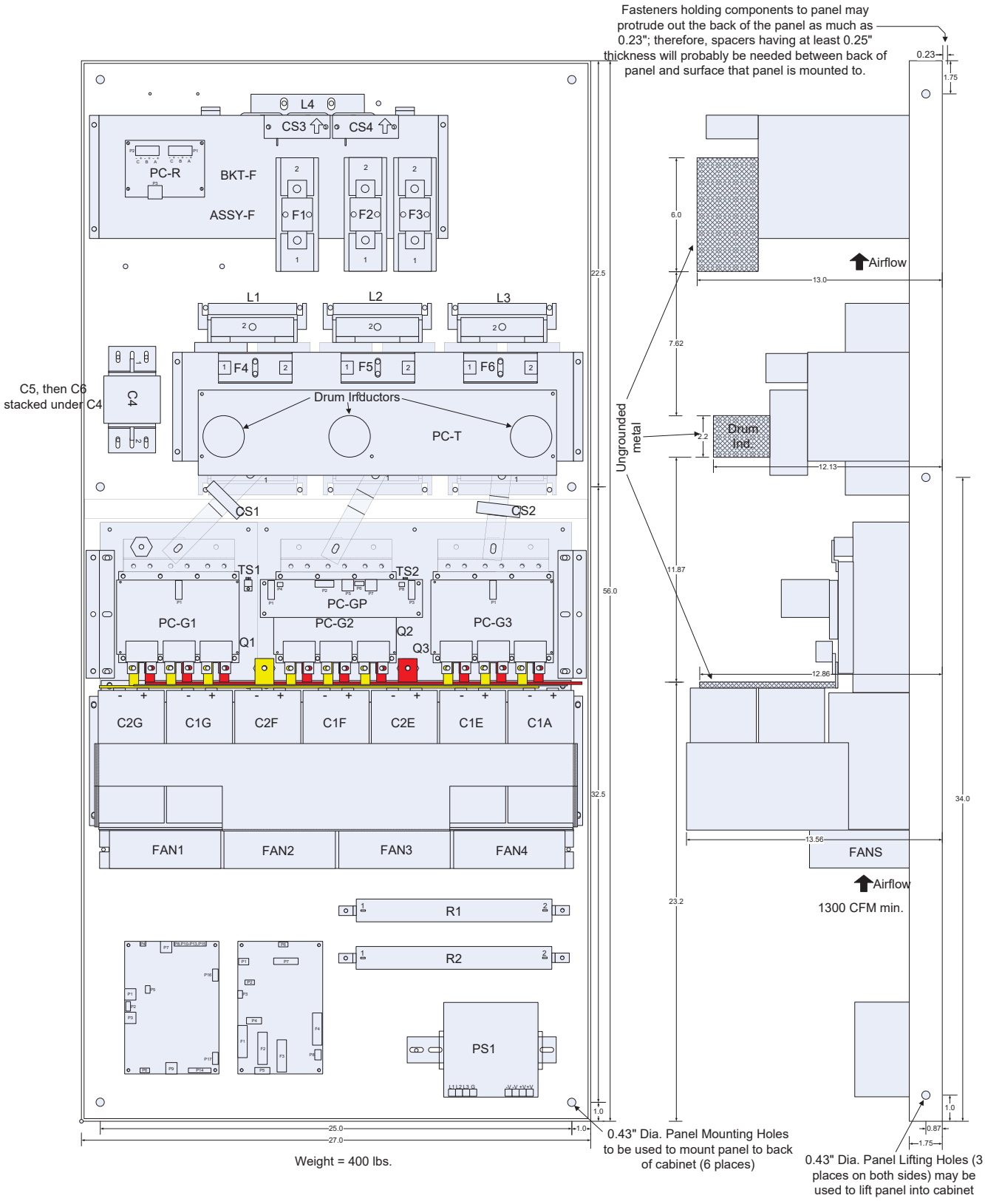

Figure 10.5: 300 Amp AHF Panel Layout Drawings

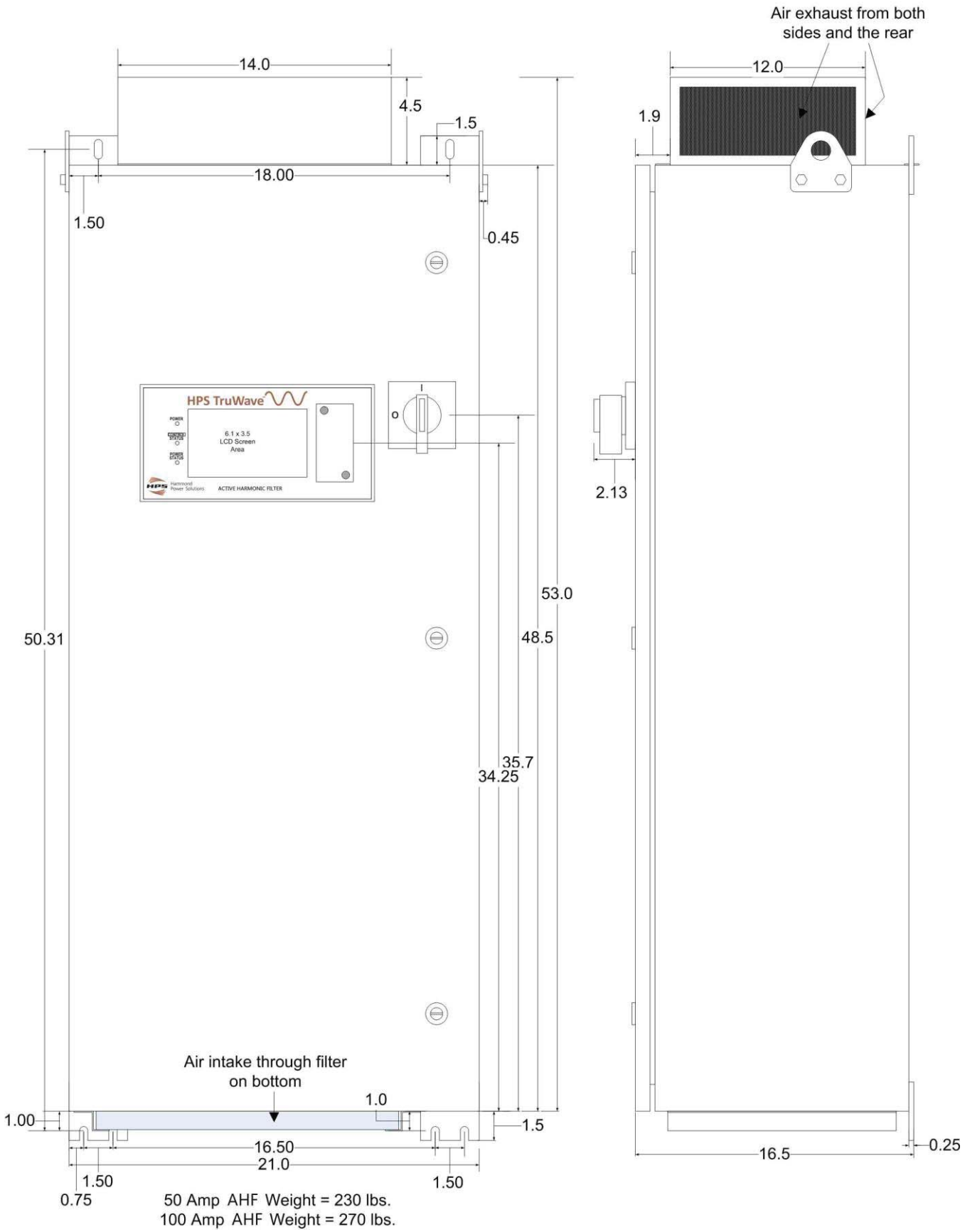

Figure 10.6: 50 & 100 Amp Type 1 Enclosed AHF Drawings

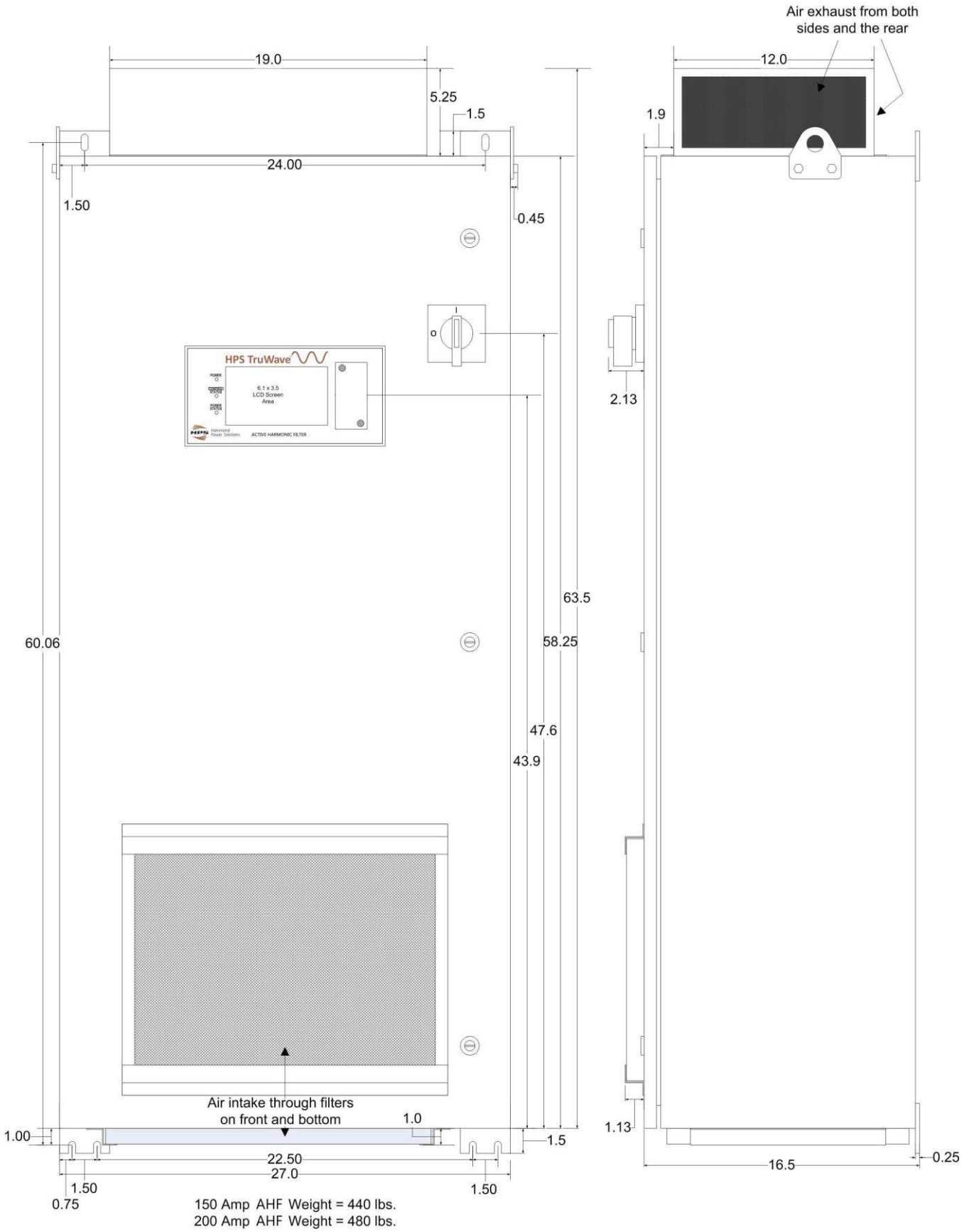

Figure 10.7: 150 & 200 Amp Type 1 Enclosed AHF Drawings

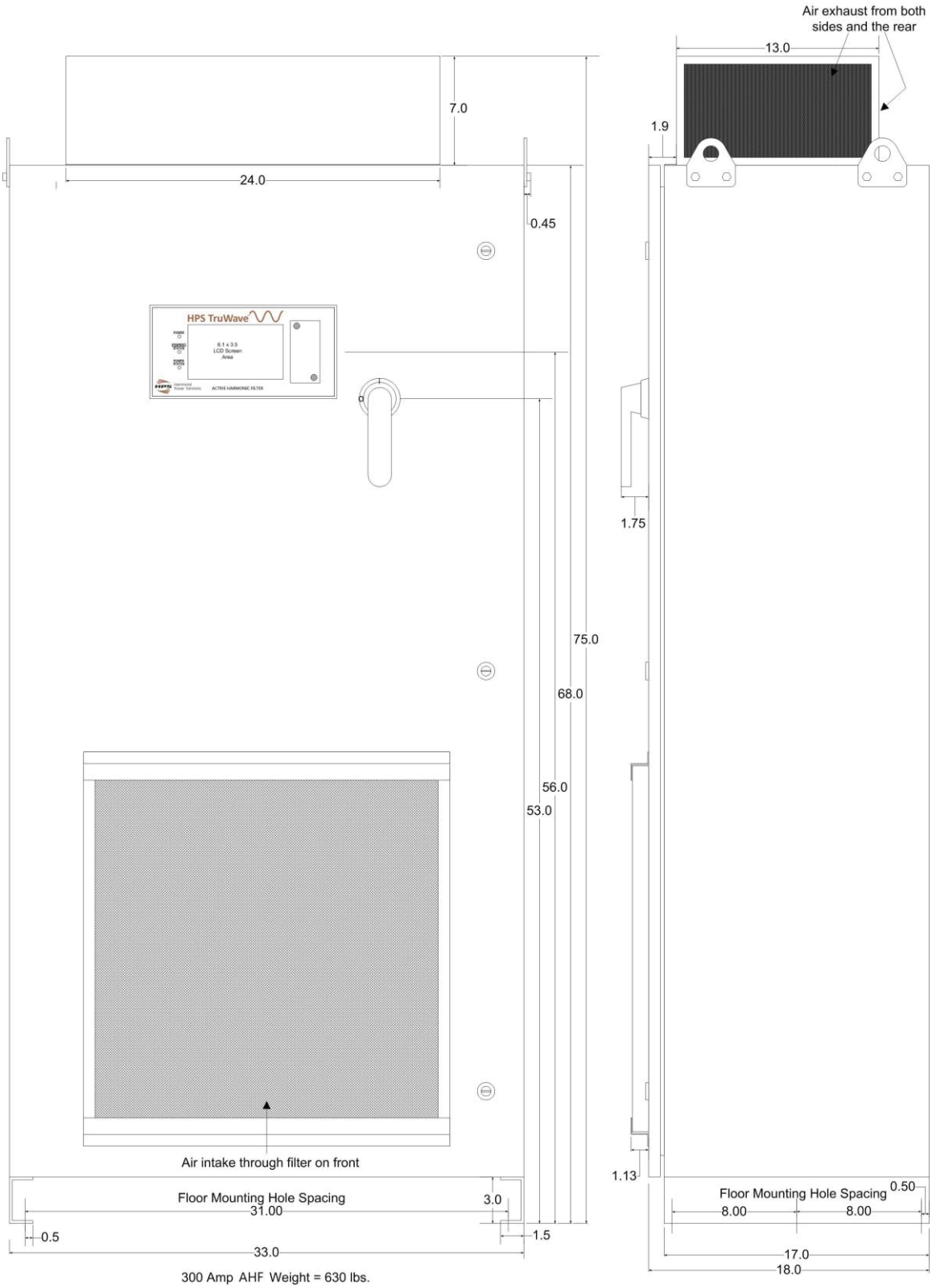

Figure 10.8: 300 Amp Type 1 Enclosed AHF Drawings

11. WARRANTY/SERVICE AND REPAIR

≺LIMITED WARRANTY POLICY≻

HPS warrants its Active Harmonic Filter (AHF) to be free from defects in materials and workmanship for a period of 18 months from the date of original shipment from the factory or 12 months from the verified date of startup, whichever comes first, provided the AHF has not been abused, misused, or used outside of the specified conditions. HPS will be the sole determiner as to whether the unit has been abused or misused. If found to be defective, the unit will be repaired or replaced at the discretion of HPS Unless specified by contract, warranty service can only be obtained by returning the equipment to the HPS facility.

Before returning any unit, in or out of warranty, to HPS, purchaser must contact HPS's Customer Service Department. Any UNAUTHORIZED return of a unit to HPS for in-warranty or out-of-warranty repairs will be subject to an inspection and handling charge, in addition to all associated repair and transportation costs. HPS will be in no way responsible for any consequential damages of any kind or nature whatsoever resulting from the use of its unit in any manner whatsoever and/or from the breach of any warranty, express or implied.



CANADA
595 Southgate Drive
Guelph, Ontario N1G 3W6
Tel: (519) 822-2441
Fax: (519) 822-9701
Toll Free: 1-888-798-8882
sales@hammondpowersolutions.com

UNITED STATES
1100 Lake Street
Baraboo, Wisconsin 53913-2866
Tel: (608) 356-3921
Fax: (608) 355-7623
Toll Free: 1-866-705-4684
sales@hammondpowersolutions.com

User Manual

Original Instructions

Allen-Bradley

PowerFlex 755/755T Integrated Safety - Safe Torque Off Option Module

Catalog Number 20-750-S3









Allen-Bradley • Rockwell Software

Rockwell Automation

Important User Information

Read this document and the documents listed in the additional resources section about installation, configuration, and operation of this equipment before you install, configure, operate, or maintain this product. Users are required to familiarize themselves with installation and wiring instructions in addition to requirements of all applicable codes, laws, and standards.

Activities including installation, adjustments, putting into service, use, assembly, disassembly, and maintenance are required to be carried out by suitably trained personnel in accordance with applicable code of practice.

If this equipment is used in a manner not specified by the manufacturer, the protection provided by the equipment may be impaired.

In no event will Rockwell Automation, Inc. be responsible or liable for indirect or consequential damages resulting from the use or application of this equipment.

The examples and diagrams in this manual are included solely for illustrative purposes. Because of the many variables and requirements associated with any particular installation, Rockwell Automation, Inc. cannot assume responsibility or liability for actual use based on the examples and diagrams.

No patent liability is assumed by Rockwell Automation, Inc. with respect to use of information, circuits, equipment, or software described in this manual.

Reproduction of the contents of this manual, in whole or in part, without written permission of Rockwell Automation, Inc., is prohibited.

Throughout this manual, when necessary, we use notes to make you aware of safety considerations.

	**WARNING:** Identifies information about practices or circumstances that can cause an explosion in a hazardous environment, which may lead to personal injury or death, property damage, or economic loss.
	**ATTENTION:** Identifies information about practices or circumstances that can lead to personal injury or death, property damage, or economic loss. Attentions help you identify a hazard, avoid a hazard, and recognize the consequence.
IMPORTANT	Identifies information that is critical for successful application and understanding of the product.

Labels may also be on or inside the equipment to provide specific precautions.

	**SHOCK HAZARD:** Labels may be on or inside the equipment, for example, a drive or motor, to alert people that dangerous voltage may be present.
	**BURN HAZARD:** Labels may be on or inside the equipment, for example, a drive or motor, to alert people that surfaces may reach dangerous temperatures.
	**ARC FLASH HAZARD:** Labels may be on or inside the equipment, for example, a motor control center, to alert people to potential Arc Flash. Arc Flash will cause severe injury or death. Wear proper Personal Protective Equipment (PPE). Follow ALL Regulatory requirements for safe work practices and for Personal Protective Equipment (PPE).

Preface

Summary of Changes 7
Conventions 7
Terminology 8
Product Firmware and Release Notes 9
Additional Resources 10

Chapter 1

Safety Concept

What Is the Integrated Safety - Safe Torque Off Option Module? . 11
Compatible Drives 12
Compatible Safety Controllers 13
Network Mode 13
Hardwired Mode 14
Safety Application Requirements 14
Safety Certification 14
Important Safety Considerations 14
Stop Category Definitions 15
Performance Level and Safety Integrity Level (SIL) CL3 15
Functional Proof Tests 16
PFD and PFH Definitions 16
PFD and PFH Data 17
Safety Reaction Time 17
Considerations for Safety Ratings 18
Contact Information If Safety Option Failure Occurs 18

Chapter 2

Installation

Remove Power from the Drive System 20
Access the Control Pod 20
Set the Safety Jumper 21
Install the Safety Option Module 22

Chapter 3

Configuration

Description of Operation 25
Out-of-Box State 26
Recognize Out-of-Box State 26
Restore the Drive to Out-of-Box State 26

Chapter 4

Standard I/O – Network STO Programming and Operation

Description of Integrated Operation 29
Safe Torque Off Assembly Tags 30
Configure Safe Torque Off in the Logix Designer Application 31
Add a PowerFlex 755 Drive to the Controller Project 33

Add an Option Card to a PowerFlex 755 Drive in I/O Mode ... 34
Add an Option Card to a PowerFlex 755T Drive Product in I/O Mode ... 37
Generate the Safety Network Number (SNN) ... 39
Configure Safety Connections ... 41
Safety Configuration Signature and Ownership ... 43
Reset Ownership ... 43
Safe Torque Off – Stop Category 0 Example Program ... 44
Safe Torque Off – Stop Category 1 Example Program ... 45
Falling Edge Reset ... 46
Safety Tags in Standard Routines ... 46
Standard Tags in Safety Routines (tag mapping) ... 46
Safe Torque Off Fault Reset ... 47
Understand Integrated Safety Drive Replacement ... 48
Replace an Integrated Safety Drive in a GuardLogix System ... 48

Chapter 5

Integrated Motion – Network STO Programming and Operation

Requirements ... 51
Description of Operation ... 51
Safe Torque Off Assembly Tags ... 52
Configure Safe Torque Off in the Logix Designer Application ... 54
Add a PowerFlex 755 Drive to the Controller Project ... 55
Configure an Option Card on a PowerFlex 755 Drive in Integrated Motion on EtherNet/IP Network Applications ... 56
Generate the Safety Network Number (SNN) ... 57
Configure Safety Connections ... 58
Safety Configuration Signature and Ownership ... 60
Reset Ownership ... 60
Safe Torque Off – Stop Category 0 Example Program ... 61
Safe Torque Off – Stop Category 1 Example Program ... 62
Falling Edge Reset ... 62
Safety Tags in Standard Routines ... 63
Standard Tags in Safety Routines (tag mapping) ... 63
STO Fault Reset ... 64
Troubleshoot the Safe Torque Off Function ... 65
Understand Integrated Safety Drive Replacement ... 65
Replace an Integrated Safety Drive in a GuardLogix System ... 66
Motion Direct Commands in Motion Control Systems ... 67

Chapter 6

Hardwired STO Wiring and Operation

Wiring ... 75
Cabling ... 76
Power Supply Requirements ... 76
Description of Hardwired Operation ... 77
Selection of Hardwired Operation ... 77

Configure the Drive with Hardwired Safety Connections 77
Timing Diagrams 78

Chapter 7

Monitoring and Troubleshooting

Monitor STO Status 81
Module Status Indicator (DS1) 81
Network Status Indicator (DS2) 82
Motion Output Status Indicator (DS3) 82
Monitor STO With a HIM or Software 83
Fault Messages on HIM, Drive Module, and Connected Components Workbench Software 83
Safety Supervisor State 86
Safe Torque Off Faults 86

Appendix A

Specifications, Certifications, and CE Conformity

Integrated Safety - Safe Torque Off Option Module Specifications 87
Environmental Specifications 88
Certifications 89
Waste Electrical and Electronic Equipment (WEEE) 89

Appendix B

STO Option Module Replacement Considerations

Installation Considerations 91
Option Module Slots 91
Wiring 92
Safe Torque Off Option Module 92
Integrated Safety - Safe Torque Off Option Module 92

Appendix C

Parameter Data

Parameters and Settings in a Linear List 93
Device Config Parameters 93
Host Config Parameters 95

Index 97

Notes:

Topic	Page
Summary of Changes	7
Conventions	7
Terminology	8
Product Firmware and Release Notes	9
Additional Resources	10

This user manual explains how to use PowerFlex® 755 drives and PowerFlex 755T drive products in safety integrity level (SIL) 3, Performance Level (PL) PLe, Category (CAT) 3 applications.

This user manual is intended for people that design, install, configure, or troubleshoot safety applications that use the Integrated Safety - Safe Torque Off option module (catalog number 20-750-S3).

IMPORTANT You must have a basic understanding of electrical circuitry and familiarity with PowerFlex 755 drives and PowerFlex 755T drive products. You must also be trained and experienced in the creation, operation, and maintenance of safety systems.

This user manual describes the safety requirements, including probability of a dangerous failure on demand (PFD) and average frequency of a dangerous failure (PFH) values and application verification information (see PFD and PFH Data on page 17).

Summary of Changes

This manual contains new and updated information as indicated in the following table.

Topic	Page
Added information about Integrated Motion	Chapter 5

Conventions

This manual lists parameter names followed by the number in brackets. For example, STO Fault Type [P7]. Both Host Config and Device Config parameters exist for this option module and the parameter numbers overlap. For example, there is a Device Config Identity Status [P1], and a Host Config Guard Status [P1].

Throughout this manual, the PowerFlex 755 Integrated Safety - Safe Torque Off option module is also referred to as the Integrated Safety - Safe Torque Off option module.

Throughout this manual, the PowerFlex 755TL low harmonic drives, PowerFlex 755TR regenerative drives, PowerFlex 755TM drive systems are also referred to as PowerFlex 755T drive products. The PowerFlex 755 drive is used for the examples in this manual.

Terminology

Table 1 defines the abbreviations that are used in this manual.

Table 1 - Abbreviations and Definitions

Abbreviation	Full Term	Definition
1oo2	One out of Two	Refers to the behavioral design of a dual-channel safety system.
CAT	Category	Classification of the safety-related parts of a control system in respect of their resistance to faults and their subsequent behavior in the fault condition, and which is achieved by the structural arrangement of the parts, fault detection, and/or by their reliability (source ISO 13849).
CL	Claim Limit	The maximum SIL rating that can be claimed for a safety-related electrical control system subsystem in relation to architectural constraints and systematic safety integrity (source IEC 62061).
DeviceID	Device ID	A unique identifier, comprised of the module number and SNN, to make sure that duplicate module numbers do not compromise communication between the correct safety devices.
EN	European Norm	The official European Standard.
ESD	Emergency Shutdown Systems	A system, usually independent of the main control system, which is designed to safely shut down an operating system.
ESPE	Electro-sensitive Protective Equipment	An assembly of devices and/or components working together for protective tripping or presence-sensing purposes and includes as a minimum: • A sensing device. • Controlling/monitoring devices. • Output signal-switching devices (OSSD).
HFT	Hardware Fault Tolerance	The HFT equals *n*, where *n*+1 faults could cause the loss of the safety function. An HFT of one means that two faults are required before safety is lost.
HIM	Human Interface Module	A module that is used to configure a device.
IEC	International Electrotechnical Commission	The International Electrotechnical Commission (IEC) is the organization that prepares and publishes international standards for all electrical, electronic, and related technologies.
IGBT	Insulated Gate Bipolar Transistors	Typical power switch that is used to control main current.
ISO	International Organization for Standardization	The International Organization for Standardization is an international standard-setting body that is composed of representatives from various national standards organizations.
NC	Normally Closed	A set of contacts on a relay or switch that are closed when the relay is de-energized or the switch is de-activated.
NO	Normally Open	A set of contacts on a relay or switch that are open when the relay is de-energized or the switch is de-activated.
OSSD	Output Signal Switching Device	The component of the electro-sensitive protective equipment (ESPE) connected to the control system of a machine. When the sensing device is actuated during normal operation, the device responds by going to the OFF-state.
PELV	Protective Extra Low Voltage	An electrical system where the voltage cannot exceed ELV under normal conditions, and under single-fault conditions, except earth faults in other circuits.
PFD	Probability of a Dangerous Failure on Demand	The average probability of a system to fail to perform its design function on demand.
PFH	Average Frequency of a Dangerous Failure per hour	The average frequency of a system to have a dangerous failure per hour.
PL	Performance Level	EN ISO 13849-1 safety rating
PM	Permanent Magnet	In permanent magnet (PM) motors, magnets mounted on or embedded in the rotor, couple with the current-induced internal magnetic fields of the motor generated by electrical input to the stator.
SELV	Safety Extra Low Voltage Circuit	A secondary circuit that is designed and protected so that, under normal and single fault conditions, its voltages do not exceed a safe value.
SIL	Safety Integrity Level	A measure of a products ability to lower the risk that a dangerous failure could occur.
SSN	Safety Network Number	A unique number that identifies a section of a safety network.
STO	Safe Torque Off	The Safe Torque Off (STO) function is used to help prevent unexpected motor rotation during an emergency while the drive remains connected to the power supply. When STO is activated, the torque power cannot reach the drive, which stops and helps prevent any motor shaft rotation.

Product Firmware and Release Notes

Product firmware and release notes are available online within the Product Compatibility and Download Center.

1. From the Search bar on http://www.ab.com, choose Compatibility and Downloads.



2. Search for your product.

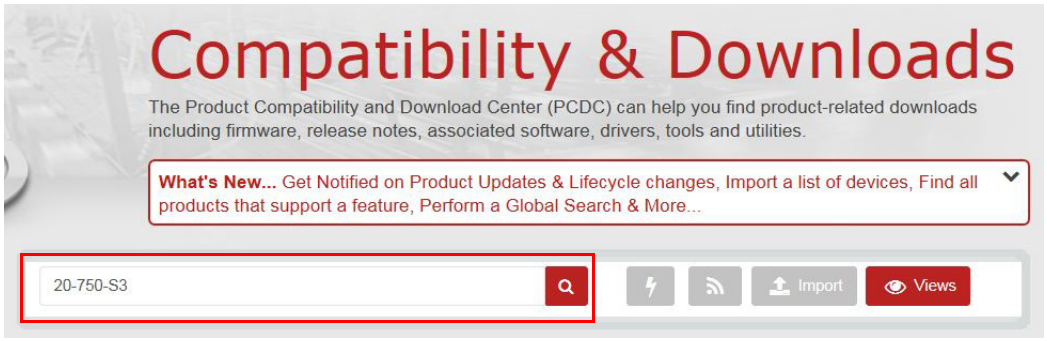

3. On the search results page, find the firmware and release notes for your product. If no firmware/release notes are available, the module is still shipping with its original firmware release.

See the Product Compatibility and Download Center Quick Start Guide, publication PCDC-QS001, for instructions on how to find and download firmware and release notes.

Additional Resources

These documents contain additional information concerning related Rockwell Automation products.

Resource	Description
PowerFlex 750-Series Products with TotalFORCE™ Control Installation Instructions, publication 750-IN100	Provides the basic steps to install PowerFlex® 755TL low harmonic drives, PowerFlex 755TR regenerative drives, and PowerFlex 755TM drive systems.
PowerFlex 755TM IP00 Open Type Kits Installation Instructions, publication 750-IN101	Provides instructions to install IP00 Open Type kits in user-supplied enclosures.
PowerFlex Drives with TotalFORCE® Control Programming Manual, publication 750-PM100	Provides detailed information on: • I/O, control, and feedback options • Parameters and programming • Faults, alarms, and troubleshooting
PowerFlex 750-Series AC Drive Installation Instructions, publication 750-IN001	Provides information on how to install the Safe Torque Off option module in PowerFlex 750-Series drive.
PowerFlex 750-Series AC Drives Programming Manual, publication 750-PM001	Provides information on how to mount, install, and configure PowerFlex 750-Series drives.
Enhanced PowerFlex 7-Class Human Interface Module (HIM) User Manual, publication 20HIM-UM001	Provides information for using the 20-HIM-A6 HIM to configure PowerFlex 750-Series drives and the Safe Torque Off option module.
Connected Components Workbench Online Help	Online Help that provides a description of the different elements of the Connected Components Workbench™ software.
GuardLogix 5570 and Compact GuardLogix 5370 Controller Systems Safety Reference Manual, publication 1756-RM099	Provides information on safety application requirements for GuardLogix® 5570 and Compact GuardLogix 5370 controllers in Studio 5000 Logix Designer® applications.
System Design for Control of Electrical Noise Reference Manual, publication GMC-RM001	Information, examples, and techniques that are designed to minimize system failures caused by electrical noise.
Safety Guidelines for the Application, Installation, and Maintenance of Solid-State Control, publication SGI-1.1	Describes important differences between solid-state control and hardwired electromechanical devices.
GuardLogix 5580 and Compact GuardLogix 5380 Controller Systems Safety Reference, publication 1756-RM012	Provides information on safety application requirements for GuardLogix 5580 and Compact GuardLogix 5380 controllers in Studio 5000 Logix Designer applications.
GuardLogix 5570 Controllers User Manual, publication 1756-UM022	Provides information on how to use standard Guard Logix 5570 controllers.
ControlLogix 5580 Controllers User Manual, publication 1756-UM543	Provides information on how to use standard ControlLogix® 5580 controllers.
Compact GuardLogix 5370 Controllers User Manual, publication 1769-UM022	Provides information on how to use Compact GuardLogix 5370 controllers.
CompactLogix 5380 and Compact GuardLogix 5380 Controllers User Manual, publication 5069-UM001	Provides information on how to use CompactLogix™ 5380 and Compact GuardLogix 5380 controllers.

You can view or download publications at http://www.rockwellautomation.com/global/literature-library/overview.page. To order paper copies of technical documentation, contact your local Allen-Bradley distributor or Rockwell Automation sales representative.

Safety Concept

This chapter provides information on safety considerations for the Integrated Safety - Safe Torque Off option module.

Topic	Page
What Is the Integrated Safety - Safe Torque Off Option Module?	11
Compatible Drives	12
Compatible Safety Controllers	13
Safety Application Requirements	14
Safety Certification	14
Functional Proof Tests	16
PFD and PFH Definitions	16
PFD and PFH Data	17
Safety Reaction Time	17
Considerations for Safety Ratings	18
Contact Information If Safety Option Failure Occurs	18

What Is the Integrated Safety - Safe Torque Off Option Module?

The Integrated Safety - Safe Torque Off (STO) option module provides either a hardwired or a networked STO function via an EtherNet/IP® network. See Chapter 6 for detailed information on hardwired operation.

With networked Safe Torque Off, a GuardLogix® safety controller issues the Safe Torque Off command over the EtherNet/IP network, and the PowerFlex® drive executes the command. The Integrated Safety - Safe Torque Off option module includes these features:

- Is designed to remove power from the gate firing circuits of the drive output power devices (IGBTs). With the power removed, the drive output power devices cannot turn on to generate AC power to the motor.
- Can be used in combination with other safety devices to satisfy the requirements of IEC 61508, IEC 61800-5-2 SIL 3, ISO 13849-1 PLe, and Category 3 for Safe Torque Off (STO).

IMPORTANT The Integrated Safety - Safe Torque Off option module is suitable for performing mechanical work on the drive train or affected area of a machine only. It does not provide electrical safety.

IMPORTANT The Integrated Safety - Safe Torque Off option module does not remove dangerous voltages at the drive output. Before performing any electrical work on the drive or motor, turn off the input power to the drive, and follow all safety procedures. See Remove Power from the Drive System on page 20 for more information.

IMPORTANT You cannot install multiple safety option modules simultaneously. Only one of these safety option modules can be installed in the drive:

- PowerFlex® 750-Series Safe Torque Off option module (catalog number 20-750-S)
- PowerFlex 750-Series Safe Speed Monitor option module (catalog number 20-750-S1)
- PowerFlex 755 Integrated Safety - Safe Torque Off option module (catalog number 20-750-S3)
- PowerFlex 755 Integrated Safety Functions option module (catalog number 20-750-S4)



ATTENTION: If two output IGBTs fail in the drive, when the Integrated Safety - Safe Torque Off option module has controlled the drive outputs to the Off state, the drive can provide stored energy for up to 180° of rotation in a 2-pole motor before torque production in the motor stops.



ATTENTION: The STO function only disables motor torque. A mechanical force on the motor shaft, such as suspended loads or back pressure in a pump or fan, can cause motor rotation.

IMPORTANT Do not use this option module as a control for starting or stopping the drive.

Compatible Drives

The Integrated Safety - Safe Torque Off option module is compatible with these PowerFlex 755 drives and PowerFlex 755T drive products:

- PowerFlex 755 drives (firmware revision 13 or later)
- PowerFlex 755TL low harmonic drives
- PowerFlex 755TR regenerative drives
- PowerFlex 755TM drive systems

Integrated STO is via the embedded Ethernet port on the drive only. Device Level Ring (DLR) capability is supported for the PowerFlex 755 when a 20-750-ENETR Dual Port EtherNet/IP option module is used in Tap mode.

The PowerFlex 755T has DLR capability standard with its two embedded Ethernet ports.

IMPORTANT The Integrated Safety - Safe Torque Off option module is not compatible with PowerFlex 753 drives.

For use with the Studio 5000 Logix Designer® application, you need the following drive Add-on Profiles (AOPs) for I/O mode:

- For PowerFlex 755 drives, AOP version 4.09 (or later)
- For PowerFlex 755T drive products, all AOP versions

The following Integrated Motion AOPs are needed:

- For PowerFlex 755 drives, Integrated Motion AOP version 18.00.00 (or later)
- PowerFlex 755T drive products do not support Integrated Motion at this time.

Compatible Safety Controllers

Network Mode

A GuardLogix safety controller is required for use of the Integrated Safety - Safe Torque Off option module that is used in Network mode control ('Safety', 'Standard and Safety', or 'Motion and Safety' used for Connection type). The following GuardLogix controllers may be used:

Controller	Controller Firmware Revision	Studio 5000 Logix Designer Version
GuardLogix 5570 safety controller	30.00	30.00.00
GuardLogix 5580 safety controller	31.00	31.00.00
Compact GuardLogix 5370 safety controller	30.00	30.00.00
Compact GuardLogix 5380 safety controller	31.00	31.00.00

IMPORTANT Integrated Motion support of the Integrated Safety - Safe Torque Off option module (catalog number 20-750-S3) is only available with GuardLogix 5580 and Compact GuardLogix 5380 safety controllers.

The GuardLogix 5570 controller requires a 1756 EtherNet/IP adapter for network communication, but the other controllers have built-in EtherNet/IP ports. See the user and safety reference manuals listed in Additional Resources on page 10 for details on using these controllers.

Hardwired Mode

Various safety controllers or other safety devices can be used with the Integrated Safety - Safe Torque Off option module when it is used in Hardwired mode control.

Safety Application Requirements

Create, record, and verify the safety signature as part of the required safety application development process. The safety controller creates the safety signature. The safety signature consists of an identification number, date, and time that uniquely identifies the safety portion of a project. This signature covers all safety logic, data, and safety I/O configuration.

For safety system requirements, including information on the safety network number (SNN), verifying the safety signature, and functional verification tests, see the GuardLogix Controller Systems Safety Reference Manuals listed in the Additional Resources on page 10.

Safety Certification

The TÜV Rheinland group has approved the PowerFlex 755 Integrated Safety - Safe Torque Off option module (catalog number 20-750-S3) as suitable for use in hardwired or integrated safety applications:

- Up to and including SIL 3 according to IEC 61508
- Up to and including SIL CL3 according to IEC 62061
- Up to and including Performance Level PLe (Category 3) according to ISO 13849-1.

In these applications, the removal of motion-producing power is considered to be the safe state.

All components in the system must be chosen and applied correctly to achieve the desired level of operator safeguarding.

Important Safety Considerations

You are responsible for these system safety considerations:

- Set-up, safety rating, and validation of any sensors or actuators connected to the system.
- Complete a system-level risk assessment, and reassess the system any time a change is made.
- Certification of the system to the desired safety Performance Level.
- Project management and proof testing.
- Programming the application software and the safety option module configurations in accordance with the information in this manual.
- Access control to the system.
- Analyze all configuration settings and choose the proper setting to achieve the required safety rating.

IMPORTANT Only qualified, authorized personnel that are trained and experienced in functional safety can plan, implement, and apply functional safety systems.



ATTENTION: When designing your system, consider how personnel exit the machine if the door locks while they are in the machine. Additional safeguard devices can be required for your specific application.



ATTENTION: In circumstances where external influences (for example, suspended loads that can fall) are present, additional measures (for example, mechanical brakes) can be necessary to help prevent any hazard.

Stop Category Definitions

Perform a risk assessment to select a stop category for each stop function:

- Stop Category 0 is achieved with immediate removal of power to the machine actuators, which results in an uncontrolled coast-to-stop. Safe Torque Off accomplishes a Stop Category 0 stop. See Safe Torque Off – Stop Category 0 Example Program on page 61.
- Stop Category 1 is achieved with a ramp to stop followed with immediate removal of power to the machine actuators. Additional logic is required in the safety task and main program for this stop function. See Safe Torque Off – Stop Category 1 Example Program on page 62.

IMPORTANT The Integrated Safety - Safe Torque Off option module does not directly support Stop Category 2.

Stop Category 2 is a controlled stop with power left available to the machine actuators.

IMPORTANT When designing the machine application, consider timing and distance for a coast-to-stop (Stop Category 0 or Safe Torque Off). For more information on stop categories and Safe Torque Off, see EN 60204-1 and EN 61800-5-2.

Performance Level and Safety Integrity Level (SIL) CL3

For safety-related control systems, Performance Level (PL), according to ISO 13849-1, and SIL levels, according to IEC 61508 and EN 62061, include a rating of the ability of the system to perform its safety functions. All safety-related components of the control system must be included in both a risk assessment and the determination of the achieved levels.

See the ISO 13849-1, IEC 61508, and EN 62061 standards for complete information on requirements for PL and SIL determination.

Functional Proof Tests

The functional safety standards require that functional proof tests be performed on the equipment that is used in the system. Proof tests are performed at user-defined intervals and are dependent upon PFD and PFH values.

IMPORTANT The time frame for the proof test interval depends on the specific application.

PFD and PFH Definitions

Safety-related systems can be classified as operating in either a Low Demand mode, or in a High Demand/Continuous mode.

- Low Demand mode: where the frequency of demands for operation, made on a safety-related system, is no greater than one per year, or no greater than twice the proof test frequency.
- High Demand/Continuous mode: where the frequency of demands for operation, made on a safety-related system, is greater than once per year, or greater than twice the proof test interval.

The SIL value for a low-demand safety-related system is directly related to order-of-magnitude ranges of its average probability of failure to perform its safety function on demand or, simply, the probability of a dangerous failure on demand (PFD).

The SIL value for a High Demand/Continuous mode safety-related system is directly related to the average frequency of a dangerous failure (PFH) per hour.

PFD and PFH Data

These PFD and PFH calculations are based on the equations from Part 6 of EN 61508 and show worst-case values.

This table provides data for a 20-year proof test interval and demonstrates the worst-case effect of various configuration changes on the data.

Table 2 - PFD and PFH for PowerFlex 755 Drives

Attribute	PowerFlex 755 Drives Frames 1…7	PowerFlex 755 Drives Frame 8	PowerFlex 755 Drives Frame 9	PowerFlex 755 Drives Frame 10
$PFD_{(average)}$	1.44E-4	2.84E-4	3.76E-4	4.67E-4
PFH (1/hour)	1.79E-9	3.41E-9	4.46E-9	5.51E-9
SIL	3	3	3	3
PL	e	e	e	e
Category	3	3	3	3
$MTTF_D$ years	193.4 (high)	91.0 (high)	67.8 (high)	54.3 (high)
DC_{avg}%	90.3% (medium)	94.1% (high)	95.0% (high)	95.5% (high)
HFT	1 (1oo2)	1 (1oo2)	1 (1oo2)	1 (1oo2)
Mission time	20 years	20 years	20 years	20 years

Table 3 - PFD and PFH for PowerFlex 755T Drive Products

Attribute	PowerFlex 755T Drive Products Frame 8	PowerFlex 755T Drive Products Frame 9	PowerFlex 755T Drive Products Frame 10	PowerFlex 755T Drive Products Frame 11	PowerFlex 755T Drive Products Frame 12
$PFD_{(average)}$	3.59E-4	3.85E-4	4.11E-4	4.37E-4	4.63E-4
PFH (1/hour)	4.28E-9	4.57E-9	4.87E-9	5.17E-9	5.47E-9
SIL	3	3	3	3	3
PL	e	e	e	e	e
Category	3	3	3	3	3
$MTTF_D$ years	99.9 (high)	85.7 (high)	75.1 (high)	66.8 (high)	60.2 (high)
DC_{avg}%	93.3% (medium)	93.8% (medium)	94.2% (high)	94.5% (high)	94.7% (high)
HFT	1 (1oo2)	1 (1oo2)	1 (1oo2)	1 (1oo2)	1 (1oo2)
Mission time	20 years	20 years	20 years	20 years	20 years

Safety Reaction Time

The safety reaction time is the length of time from a safety-related event as input to the system until the system is in the safe state.

Table 4 shows the safety reaction time from an input signal condition that triggers a safe stop, to the initiation of the configured Stop Type.

Response time is the delay between the time when the drive STO function receives the STO request, and when power that produces the motion is removed from the motor.

For details on how to calculate system reaction times with GuardLogix controllers, see the GuardLogix Controller Systems Safety Reference Manuals listed in the Additional Resources on page 10.

Table 4 - Safety Reaction Time

Drive Family	Value, Max
PowerFlex 755 drives (firmware revision 13 or later), Frames 1…10 PowerFlex 755TL low harmonic drives, Frames 8…12 PowerFlex 755TR regenerative drives, Frames 8…12 PowerFlex 755TM drive systems, Frames 8…12	15 ms

IMPORTANT An input signal condition that is present for less than the reaction time may not result in the safety function being performed. Repeated requests of the safety function for less than the reaction time can result in a spurious detection of a fault.

IMPORTANT In network STO Mode, the safety reaction time in Table 4 does not include the connection reaction time limit. See the GuardLogix Controller Systems Safety Reference Manuals, listed in the Additional Resources on page 10, for details.

Considerations for Safety Ratings

The achievable safety rating of an application that uses the Integrated Safety - Safe Torque Off option module that is installed in PowerFlex 755 drives (firmware revision 13 or later), and PowerFlex 755T drive products are dependent upon many factors, drive options, and the type of motor.

For applications that immediately remove power to the actuator, which results in an uncontrolled coast-to-stop, a safety rating up to and including SIL CL3, PL e, and Category 3 can be achieved.

Contact Information If Safety Option Failure Occurs

If you experience a failure with any safety-certified device, contact your local Allen-Bradley distributor to request any of these actions:

- Return the device to Rockwell Automation so the failure is appropriately logged for the catalog number that is affected and a record is made of the failure.
- Request a failure analysis (if necessary) to determine the probable cause of the failure.

Installation

This chapter provides installation, jumper settings, and wiring for the Integrated Safety - Safe Torque Off option module.

Topic	Page
Remove Power from the Drive System	20
Access the Control Pod	20
Set the Safety Jumper	21
Install the Safety Option Module	22



ATTENTION: The following information is a guide for proper installation. Rockwell Automation does not assume responsibility for the compliance or the noncompliance to any code, national, local, or otherwise for the proper installation of this equipment. A hazard of personal injury and/or equipment damage exists if codes are ignored during installation.

IMPORTANT Installation must be in accordance with the instructions in this user manual and the installation instructions for your drive.

Only qualified, authorized personnel that are trained and experienced in functional safety can plan, implement, and apply functional safety systems.

IMPORTANT During installation and maintenance, check your drive firmware release notes for known anomalies and verify that there are not safety-related anomalies.

The Integrated Safety - Safe Torque Off option module is intended to be part of the safety-related control system. Before installation, perform a risk assessment that compares the Integrated Safety - Safe Torque Off option module specifications and all foreseeable operational and environmental characteristics of the control system.

A safety analysis is required to determine how often to test the safety function for proper operation during the life of the machine.

Remove Power from the Drive System

Before performing any work on the drive, remove all power to the system.

ATTENTION:

- Electrical Shock Hazard. Verify that all sources of AC and DC power are de-energized and locked out or tagged out in accordance with the requirements of ANSI/NFPA 70E, Part II.
- To avoid an electric shock hazard, verify that the voltage on the bus capacitors has discharged before performing any work on the drive. Measure the DC bus voltage at the +DC and -DC terminals or test points. The voltage must be zero. For the location of the terminal block and test point sockets, see the manual for your drive:
  - PowerFlex® 750-Series AC Drive Installation Instructions, publication 750-IN001
  - PowerFlex 750-Series Products with TotalFORCE™ Control Installation Instructions, publication 750-IN100
  - PowerFlex 755TM IP00 Open Type Kits Installation Instructions, publication 750-IN101
- In Safe Torque Off mode, hazardous voltages may still be present at the motor. To avoid an electric shock hazard, disconnect power to the motor and verify that the voltage is zero before performing any work on the motor.

Access the Control Pod

The option module is installed in the drive control pod. Different drives have different ways to access the control pod.

To access the control pod, follow these steps.

1. Remove the door or cover.
2. Loosen the retention screw on the HIM cradle.
3. Lift the cradle until the latch engages.

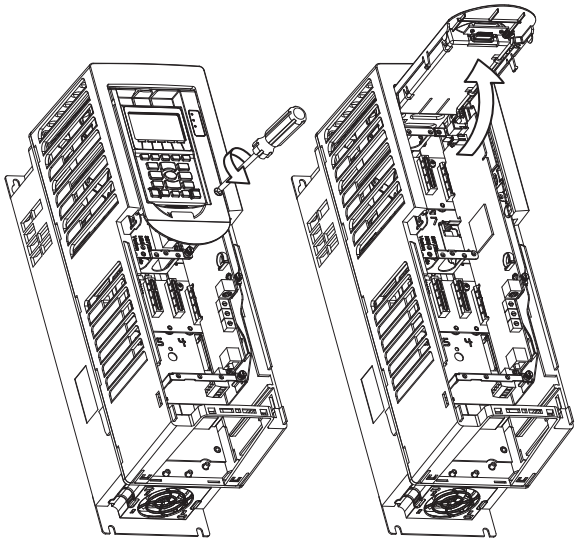

Panel-mounted Drives

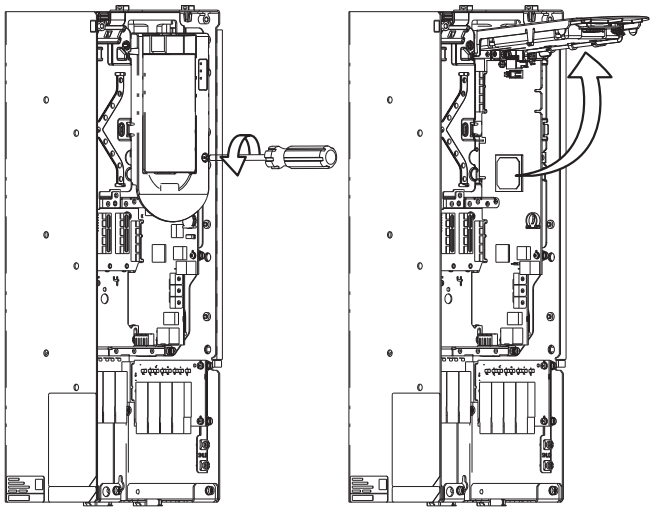

Drives in Cabinet Enclosures

See the installation instructions for your drive for more information.

Set the Safety Jumper

The PowerFlex 755 drives ship with the safety jumper (SAFETY) installed.

If the Integrated Safety - Safe Torque Off option module is installed, the control board SAFETY jumper must be removed or a Safety Jumper In Fault (F213) occurs.

IMPORTANT PowerFlex 755 drives (frames 8…10) control boards do not have a SAFETY jumper.

If the Integrated Safety - Safe Torque Off option module is installed, the control board hardware ENABLE jumper must be installed. If the jumper is not installed, a 'HW Enbl Jmpr Out' fault (F210) occurs (PowerFlex 755 drives, frames 1...7 only).

Figure 1 - PowerFlex 755 Drives Jumper Locations (frames 1…7)

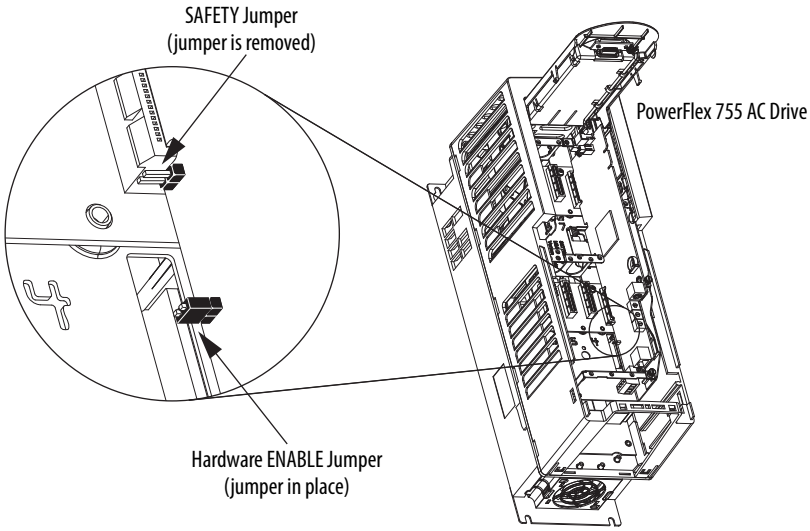

Figure 2 - PowerFlex 755T Drive Products Jumper Locations (all frame sizes)

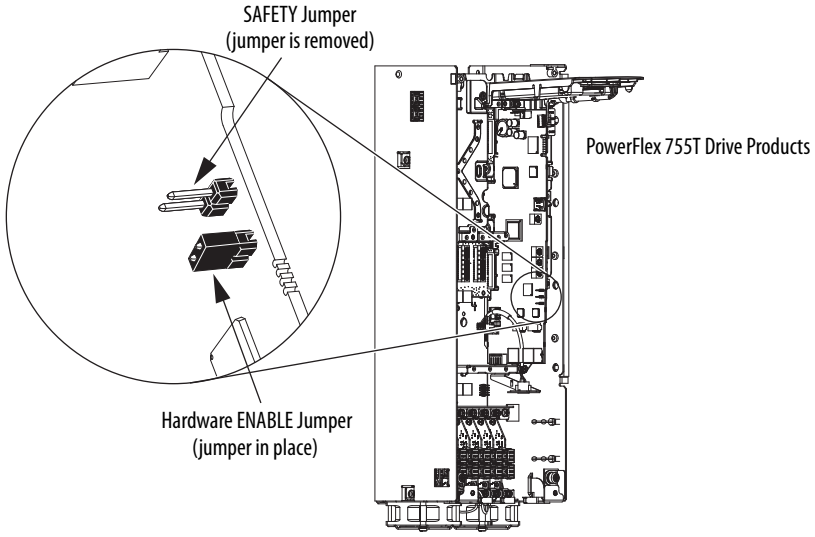

Install the Safety Option Module

To install the Integrated Safety - Safe Torque Off option module in a drive port, follow these steps:

1. Firmly press the module edge connector into the desired port.

IMPORTANT	The Integrated Safety - Safe Torque Off option module can be installed in ports 4, 5, or 6.

2. Tighten the top and bottom retaining screws.
   - Recommended torque = 0.45 N•m (4.0 lb•in)
   - Recommended screwdriver = T15 Hexalobular



IMPORTANT	Do not overtighten the retaining screws.

IMPORTANT	Only one safety option module can be installed at a time. Multiple or duplicate safety option module installations are not supported.

Figure 3 - Tighten Screws

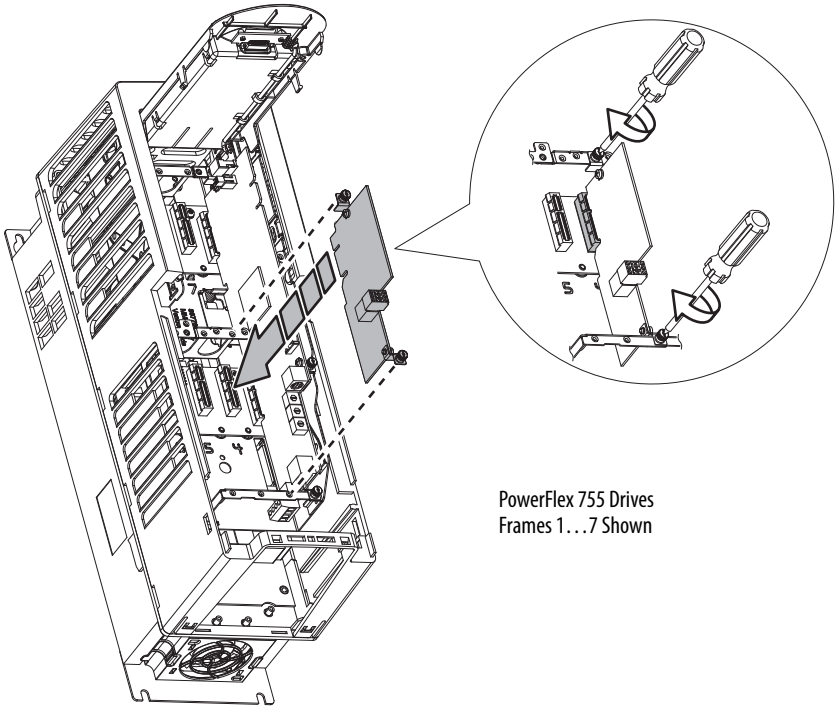

PowerFlex 755 Drives
Frames 1…7 Shown

Notes:

Configuration

This chapter provides information on how to configure the Integrated Safety - Safe Torque Off option module.

Topic	Page
Description of Operation	25
Out-of-Box State	26

Description of Operation

Safe Torque Off (STO) disables the power transistors so that the probability of torque producing switching is sufficiently low for SIL 3. This STO results in a condition where the motor is coasting (stop category 0). Disabling the power transistor output does not provide mechanical isolation of the electrical output that is required for some applications.

If STO is performed, the Start Inhibits parameter indicates the IGBTs are inhibited, and the HIM indicates that the drive is not enabled. The Start Inhibits parameter is parameter 933 in PowerFlex® 755 drives and parameter 603 in PowerFlex 755T drive products.

You can use the Safe Torque Off circuit in combination with other safety devices to achieve the stop and protection-against-restart as specified in IEC 60204-1.



ATTENTION: If two output IGBTs fail in the drive, when the Integrated Safety - Safe Torque Off option module has controlled the drive outputs to the Off state, the drive can provide stored energy for up to 180° of rotation in a 2-pole motor before torque production in the motor stops.

IMPORTANT The Integrated Safety - Safe Torque Off option module is suitable for performing mechanical work on the drive train or affected area of a machine only. It does not provide electrical safety.

Do not use this option as a control for starting and/or stopping the drive.

IMPORTANT The Integrated Safety - Safe Torque Off option module does not remove dangerous voltages at the drive output. Before performing any electrical work on the drive or motor, turn off the input power to the drive, and follow all safety procedures. See Remove Power from the Drive System on page 20 for more information.

Out-of-Box State

When the drive is in the out-of-box state with the SAFETY jumper removed, the STO function is in hardwired mode. See Chapter 6 for hardwired information.

IMPORTANT Out-of-box state = hardwired mode.
All other states = network mode.

Recognize Out-of-Box State

You can determine if the drive is in the out-of-box state by using a diagnostic parameter or by using the Logix Designer application.

IMPORTANT Only authorized personnel can reset ownership. The safety connection must be inhibited before the reset. If any active connection is detected, the safety reset is rejected.

The safety control state can be read from the Host Config Safety State [P3] parameter via the HIM or Connected Components Workbench™ software. You can also use an MSG command in the Studio 5000 Logix Designer® application to read the Safety Supervisor Status.

If the state is 'Waiting' (8) or 'Wait w Trq' (51), then the safety control is in the out-of-box state.

Restore the Drive to Out-of-Box State

Use the Safety Reset [#14] Diagnostic Item (only online)

Before you can reset the drive to out-of-box state, the value of the Safety Reset [#14] diagnostic item must be 'Ready' (1) or the reset is not allowed. Set the Safety Reset [#14] diagnostic item to 'Reset' (2) by using a HIM or Connected Components Workbench software.

Reset the Drive by Using the Logix Designer Application

After the integrated safety connection configuration is applied to the PowerFlex 755 drive at least once, you can follow these steps to restore your PowerFlex 755 drive to the out-of-box state while online.

1. Right-click the PowerFlex 755 drive you created, and choose Properties.

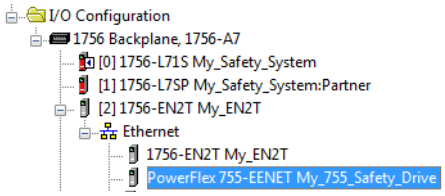

2. Click the Connection tab.

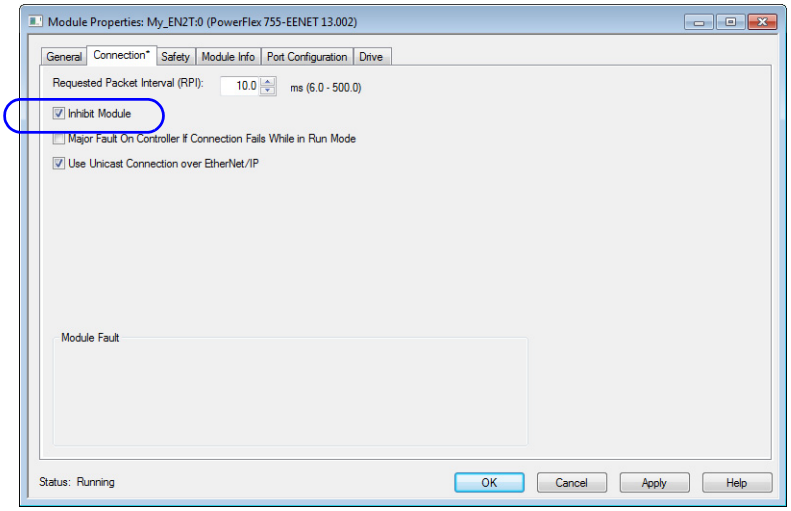

3. Check Inhibit Module.
4. Click Apply.

5. Click the Safety tab.

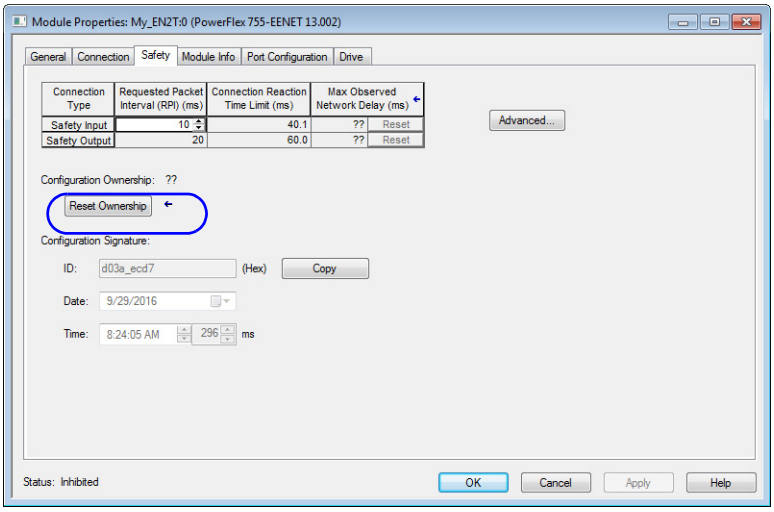

6. Click Reset Ownership.
7. Click the Connection tab.
8. Uncheck Inhibit Module.
9. Click Apply.
10. Click OK.

Standard I/O – Network STO Programming and Operation

This chapter provides information for the programming and operation of the Integrated Safety - Safe Torque Off option module when used in Standard I/O mode.

Topic	Page
Description of Integrated Operation	29
Safe Torque Off Assembly Tags	30
Configure Safe Torque Off in the Logix Designer Application	31
Safe Torque Off – Stop Category 0 Example Program	44
Safe Torque Off – Stop Category 1 Example Program	45
Safe Torque Off Fault Reset	47
Understand Integrated Safety Drive Replacement	48
Replace an Integrated Safety Drive in a GuardLogix System	48

Description of Integrated Operation

The Safe Torque Off (STO) feature provides a method, with sufficiently low probability of failure, to force the power-transistor control signals to a disabled state. When the command to execute the STO function is received from the GuardLogix® controller, all of the drive output-power transistors are released from the ON-state. This results in a condition where the drive is coasting. Disabling the power transistor output does not provide mechanical isolation of the electrical output that is required for some applications.

You can use the Safe Torque Off circuit in combination with other safety devices to achieve the stop and protection-against-restart as specified in IEC 60204-1. These conditions must be met for integrated control of the STO function:

- You must have a GuardLogix safety controller project with an EtherNet/IP network connection configured.
- You must add the PowerFlex® drive to the Ethernet network connection in the safety controller I/O tree.

The PowerFlex 755 drives and PowerFlex 755T drive product STO function reaction time is 15 ms maximum. Reaction time is the delay between the time when the drive STO function receives the STO request, and when power that produces the motion is removed from the motor.

Table 5 - Safe Torque Off Network Specifications

Attribute	Value
Safety connection RPI, min	6 ms
Input assembly connections	1
Output assembly connections	1

Safe Torque Off Assembly Tags

In Network mode, the safety controller controls the integrated STO function through the SO.SafeTorqueOff tag in the safety output assembly:

- The SO.Command tags are sent from the controller safety output assembly to the drive safety output assembly to control the Safe Torque Off function.
- The SI.Status tags are sent from the drive to the controller safety input assembly and indicate the safety control status of the drive.
- The SI.ConnectionStatus tags indicate the safety input connection status.

Table 5 and Table 6 list the safety tags added to the controller tags when a drive is added to a controller I/O configuration and the connection is configured for safety-only, or standard and safety. The attribute values that are listed are the Assembly Object attribute values.

IMPORTANT Only the data that are listed in Table 6 on page 31 is safety data with SIL 3 integrity.

Table 6 - Integrated STO Specifications

Logix Designer Tag Name	Attribute [bit]	Type	Description		
SI.ConnectionStatus (1) (2) (3)		DINT	RunMode Status	Connection Fault Status	Safety Connection Operation
SI.RunMode SI.ConnectionFault	[0] [1]	BOOL BOOL	1 = Run	0 = Valid	Data is being controlled by the producing device. The producing device is in Run mode.
			0 = Idle	0 = Valid	The connection is active and the producing device is in the Idle state. The safety data is reset to zero.
			0 = Idle	1 = Faulted	The safety connection is faulted. The state of the producing device is unknown. The safety data is reset to zero.
			1	1	Invalid state.
SI.Status (1) (4)	**0x1A0**	DINT			
SI.TorqueDisabled	[0]	BOOL	0 = Torque Permitted 1 = Torque Disabled		
SI.SafetyFault	[6]	BOOL	1 = STO fault present		
SI.ResetRequired	[7]	BOOL	1 = Reset is required		
SO.Command (1) (5)	**0x180**	DINT			
SO.SafeTorqueOff	[0]	BOOL	0 = Disable Torque 1 = Permit Torque		
SO.Reset	[7]	BOOL	0 --> 1 = Reset STO fault		

(1) Bits not listed are always zero.
(2) The Safety Validator in the safety controller determines the Connection Status.
(3) The first 2 bits of SI.ConnectionStatus contain the SI.RunMode and SI.ConnectionFault status bits of the device. The table describes the combinations of the RunMode and ConnectionFault states.
(4) Status is sent from the drive to the controller by using integrated safety protocol.
(5) Commands are sent from the controller to the drive by using integrated safety protocol.



ATTENTION: Safety I/O connections and produced/consumed connections cannot be automatically configured to fault the controller if a connection is lost and the system transitions to the safe state. Therefore, if you must detect a module fault to be sure that the system maintains SIL 3, you must monitor the SI.ConnectionStatus bits and initiate the fault via program logic.

Configure Safe Torque Off in the Logix Designer Application

This chapter provides instructions for how to add and configure an Integrated Safety - Safe Torque Off option module in a PowerFlex 755 drive or PowerFlex 755T drive product in an existing project in the Logix Designer application. This chapter is specific to safety and does not cover all aspects of drive configuration.

Before you can configure your option module in the Logix Designer application:

- You must have a safety controller project with an EtherNet/IP® network connection configured and Time Sync enabled. See the documentation for your controller, drive, and Ethernet adapter for information on configuring those products (see Additional Resources on page 10).
- You must add a drive and option card to your project.

To set up your drive with the 20-750-S3 option card, you must configure the following attributes, in addition to the drive's IP address, revision, ratings, and power structure settings:

Port	4, 5, or 6

Electronic Keying	
Exact Match	Indicates that all keying attributes must match to establish communication. If any attribute does not match precisely, communication with the device does not occur.
Compatible Module	Lets the installed device accept the key of the device that is defined in the project when the installed device can emulate the defined device. With Compatible Module, you can typically replace a device with another device that has the following characteristics: • Same catalog number • Same or higher Major Revision • Minor Revision as follows: – If the Major Revision is the same, the Minor Revision must be the same or higher. – If the Major Revision is higher, the Minor Revision can be any number.
Disable Keying	Indicates that the keying attributes are not considered when attempting to communicate with a device. With Disable Keying, communication can occur with a device other than the type specified in the project. **ATTENTION:** Disable Keying is not permitted for safety devices.

Connection	Description	Requires Controller Firmware Revision
Standard	Control is managed by this controller. Safety is managed by another controller and can be either networked or hardwired.	30.011 or later
Standard and Safety	Both control and network safety connections are managed by this controller. A Standard and Safety connection can only be made from a GuardLogix® controller.	30.012 or later
Safety Only	Network safety connection is managed by this controller. Control is managed by another controller. A Safety connection can only be made from a GuardLogix controller.	30.011 or later

The Enable Automatic Device Configuration and Fail Drive Connection on Peripheral Error checkboxes are disabled because ADC is not needed to download configuration to the 20-750-S3. This is handled automatically in the Safety Forward open each time the safety connection gets established with the option module.

Depending on the type of drive that you choose, the configuration options may appear on different dialog boxes in the programming software.

Add a PowerFlex 755 Drive to the Controller Project

1. Right-click Ethernet network and choose New Module.

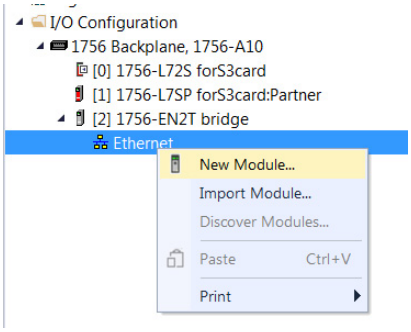

2. Choose the following:

- A PowerFlex 755 drive with embedded EtherNet/IP adapter
- A PowerFlex 755T drive product with embedded EtherNet/IP adapter

Catalog Number	Description	Vendor	Category
PowerFlex 755 HiPwr PMM-EENET	High Power AC Drive, Permanent Magnet Motor, Deep Well	Rockwell Autom...	Drive
PowerFlex 755 HiPwr-EENET	AC Drive via Embedded Enet (Frame 8 and higher)	Rockwell Autom...	Drive
PowerFlex 755 HiPwr-ENETR	AC Drive via ENETR (Frame 8 and higher)	Rockwell Autom...	Drive
PowerFlex 755 HiPwr-NET-E	AC Drive via 20-COMM-E (Frame 8 and higher)	Rockwell Autom...	Drive
PowerFlex 755 PMM-EENET	AC Drive, Permanent Magnet Motor, Deep Well	Rockwell Autom...	Drive
PowerFlex 755-EENET	AC Drive via Embedded Enet	Rockwell Autom...	Drive
PowerFlex 755-EENET-CM	PowerFlex 755 AC Drive via Embedded Ethernet - CIP Motion	Rockwell Autom...	Drive,Motion
PowerFlex 755-EENET-CM-S	PowerFlex 755 AC Drive via Embedded Ethernet - CIP Motion/Safe Torque-Off	Rockwell Autom...	Drive,Motion
PowerFlex 755-EENET-CM-S1	PowerFlex 755 AC Drive via Embedded Ethernet - CIP Motion/Safe Speed Monitor	Rockwell Autom...	Safety,Drive,Mot...
PowerFlex 755-EENET-CM-S3	PowerFlex 755 AC Drive via Embedded Ethernet - CIP Motion/S3 Safety Option	Rockwell Autom...	Safety,Drive,Mot...
PowerFlex 755-EENET-CM-S4	PowerFlex 755 AC Drive via Embedded Ethernet - CIP Motion/S4 Safety Option	Rockwell Autom...	Safety,Drive,Mot...
PowerFlex 755-ENETR	AC Drive via ENETR	Rockwell Autom...	Drive
PowerFlex 755-HiPwr-EENET-CM	PowerFlex 755 High Power AC Drive via Embedded Ethernet - CIP Motion	Rockwell Autom...	Drive,Motion
PowerFlex 755-HiPwr-EENET-CM-S	PowerFlex 755 High Power AC Drive via Embedded Ethernet - CIP Motion/Safe T...	Rockwell Autom...	Drive,Motion
PowerFlex 755-HiPwr-EENET-CM-S1	PowerFlex 755 High Power AC Drive via Embedded Ethernet - CIP Motion/Safe S...	Rockwell Autom...	Safety,Drive,Mot...
PowerFlex 755-HiPwr-EENET-CM-S3	PowerFlex 755 High Power AC Drive via Embedded Ethernet - CIP Motion/S3 Saf...	Rockwell Autom...	Safety,Drive,Mot...
PowerFlex 755-HiPwr-EENET-CM-S4	PowerFlex 755 High Power AC Drive via Embedded Ethernet - CIP Motion/S4 Saf...	Rockwell Autom...	Safety,Drive,Mot...
PowerFlex 755-NET-E	AC Drive via 20-COMM-E	Rockwell Autom...	Drive
PowerFlex 755T	PowerFlex 755TM Common Bus Inverter via Embedded Ethernet	Rockwell Autom...	Drive
PowerFlex 755TM-Bus Supply	PowerFlex 755TM Regenerative Bus Supply via Embedded Ethernet	Rockwell Autom...	Drive

3. Follow the appropriate procedure to add and configure an option card and drive:

- Add an Option Card to a PowerFlex 755 Drive in I/O Mode on page 34
- Add an Option Card to a PowerFlex 755T Drive Product in I/O Mode on page 37

Add an Option Card to a PowerFlex 755 Drive in I/O Mode

1. On the New Module dialog box, name your drive.
2. Type the IP Address.

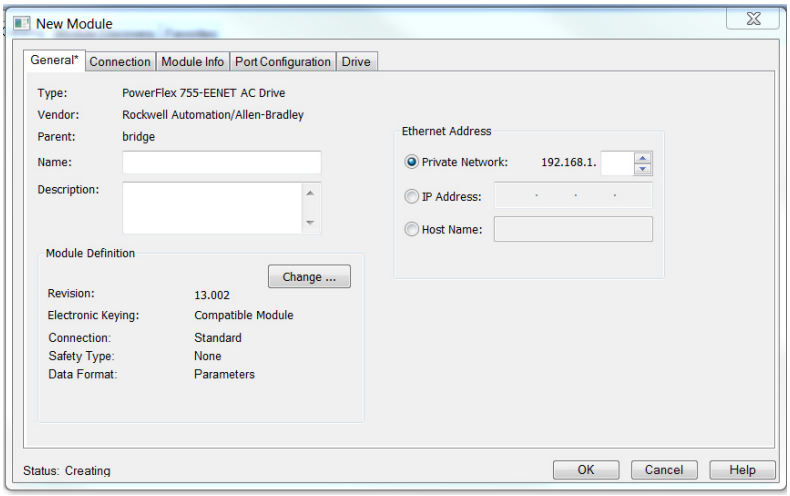

3. Choose the Drive tab.
4. Right-click the drive and choose New Peripheral Device.

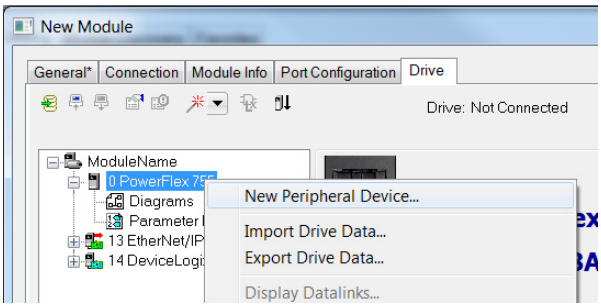

5. Expand PF750 peripherals list, select card, and click Create.

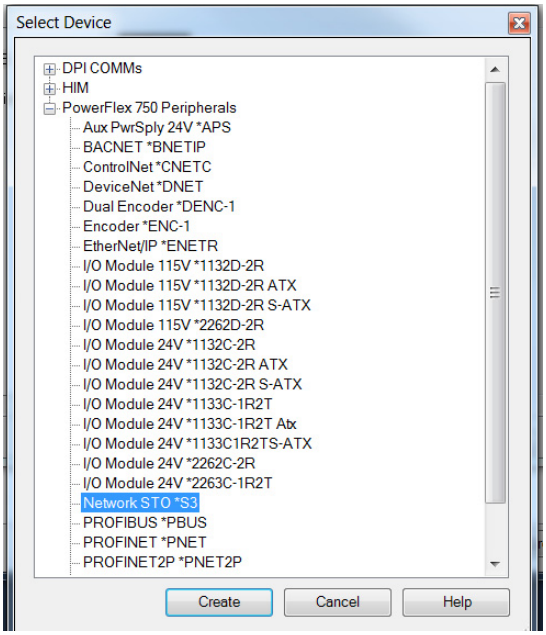

6. Choose port and Electronic Keying for card and click OK.

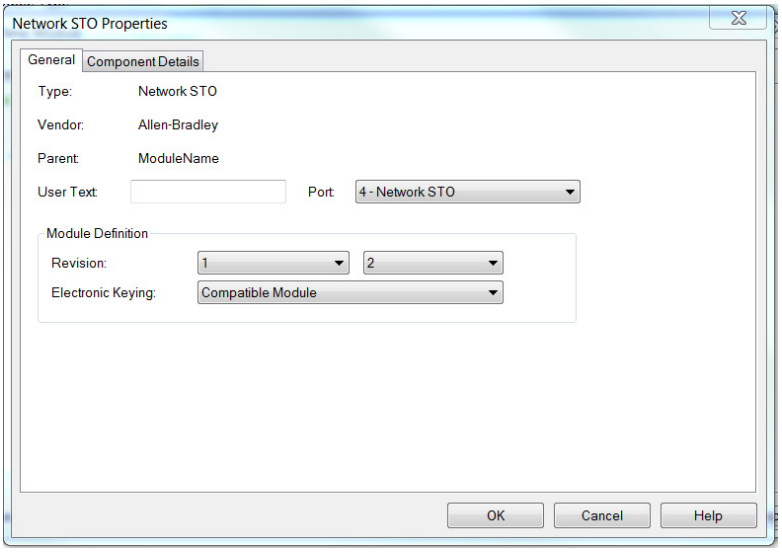

7. Choose General Tab and click change to open Module Definition.

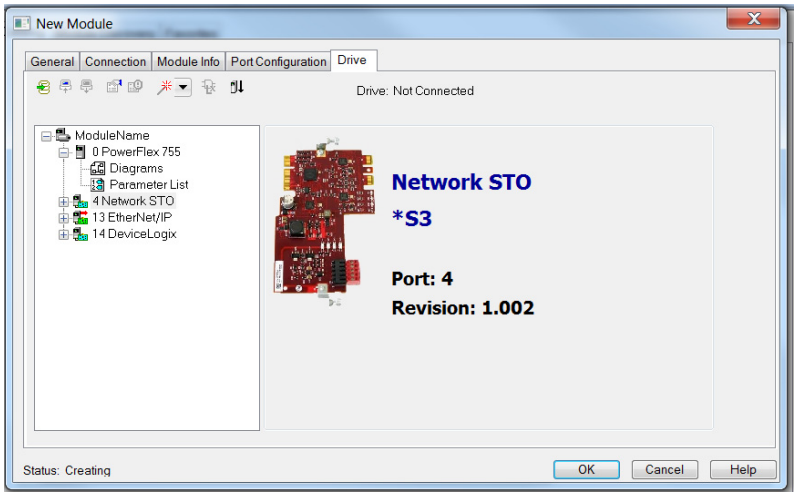

8. Choose the Connection type.

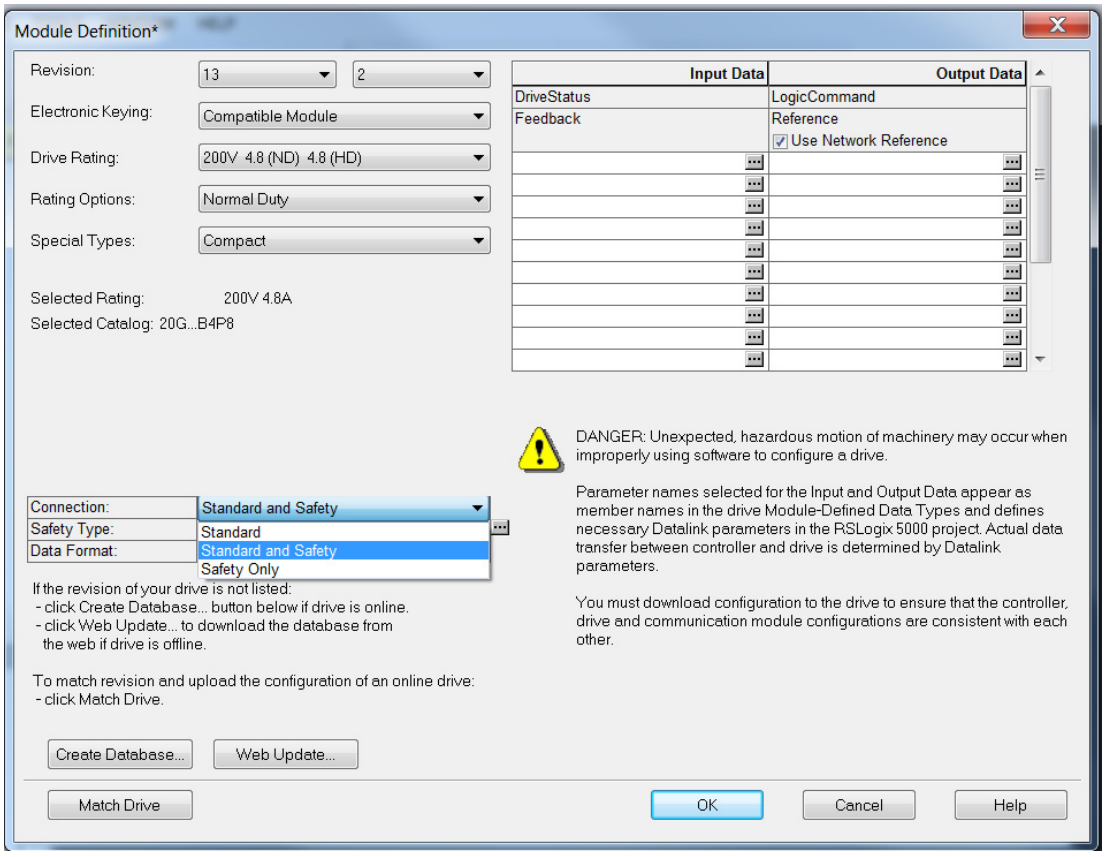

The 20-750-S3 card appears in the Safety Type field.

9. Configure the drive's properties:
   a. Revision
   b. Electronic Keying
   c. Drive Ratings
   d. Rating Options
   e. Special Types
10. Click OK to return to the New Module or Module Properties dialog box.

    A Safety tab is now available in the New Module or Module Properties dialog box, and the General tab includes a Safety Network Number Field.

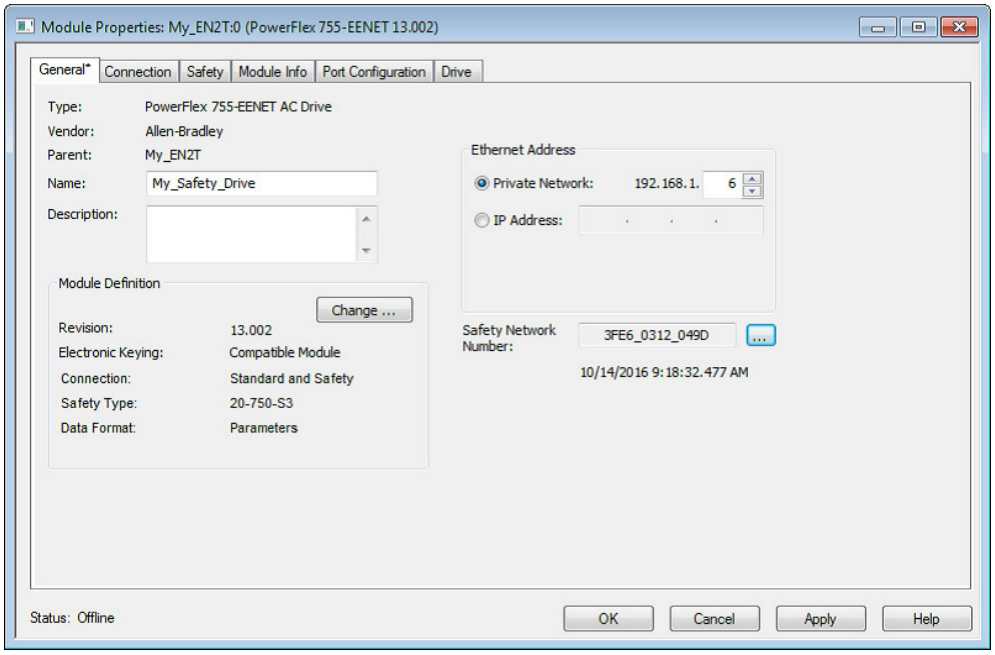

11. Continue with Generate the SNN on page 39.

Add an Option Card to a PowerFlex 755T Drive Product in I/O Mode

1. On the Identity page, name your drive.
2. Type the IP Address.
3. Configure the drive properties:
   a. Revision
   b. Electronic Keying
   c. Drive Ratings
   d. Ratings Options
   e. Special Types

4. Choose the connection type.

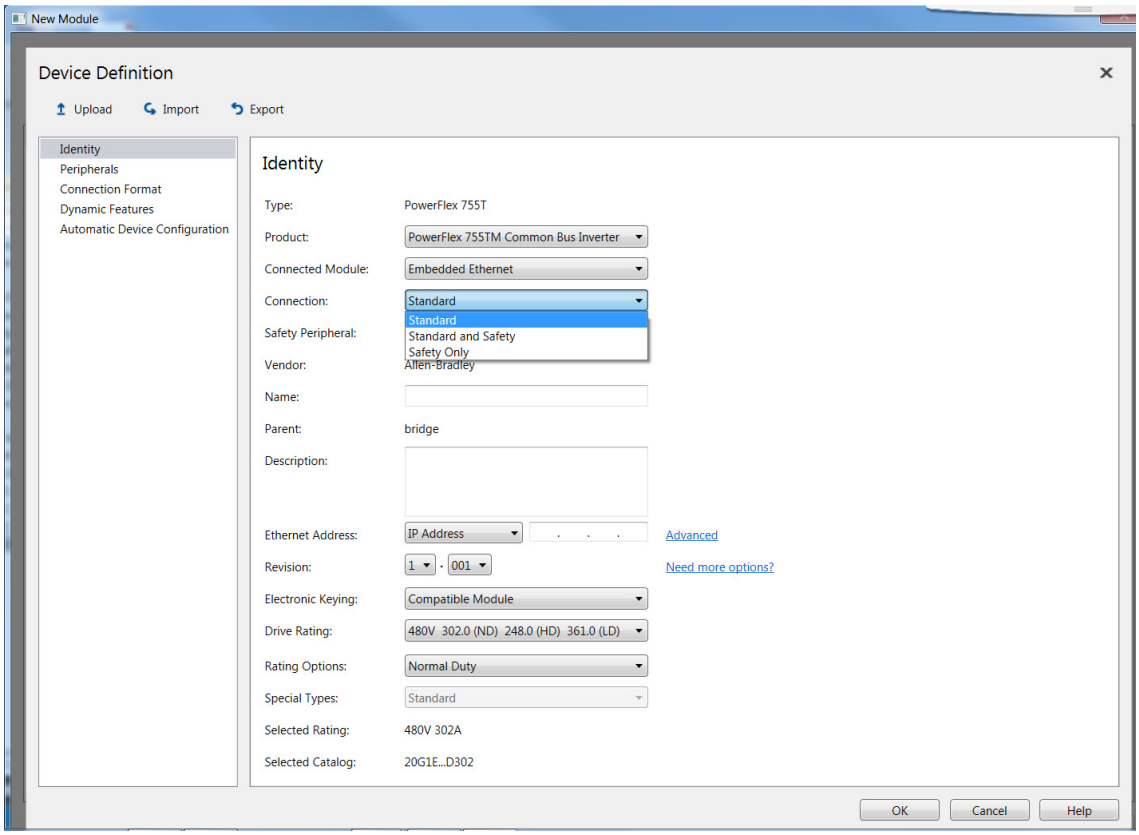

5. From the Device Definition Dialog box, choose the Peripherals page and use the Add new peripheral pull-down menu to choose the 20-750-S3 card.

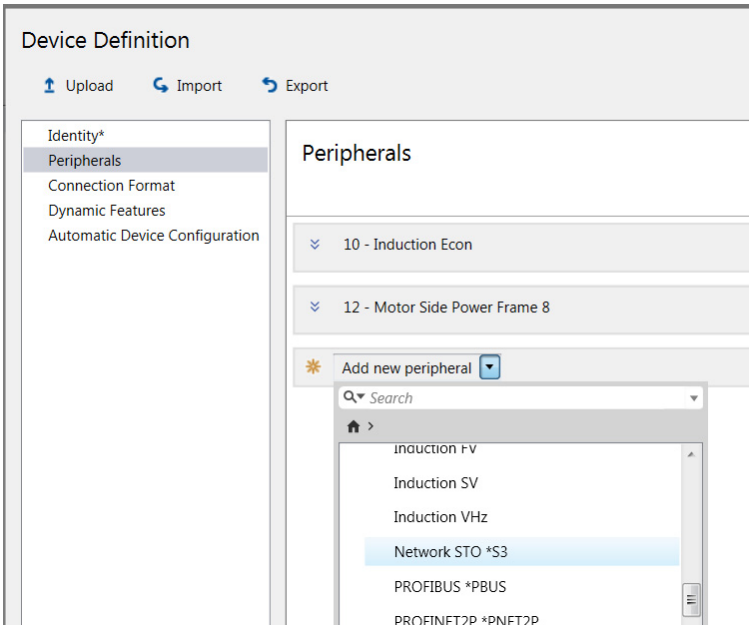

6. Expand the card entry on the Peripherals page to change the port, if desired, and to choose Electronic Keying method.

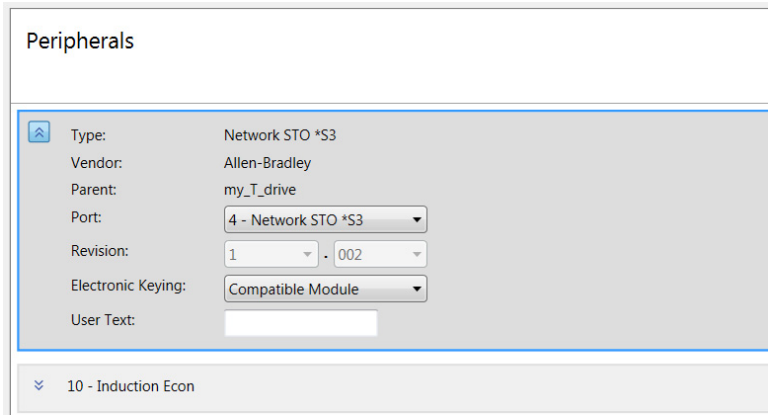

7. Click OK to return to the New Module window with drive details.
8. The New Module Window now includes a Safety Configuration page and shows the Overview page.

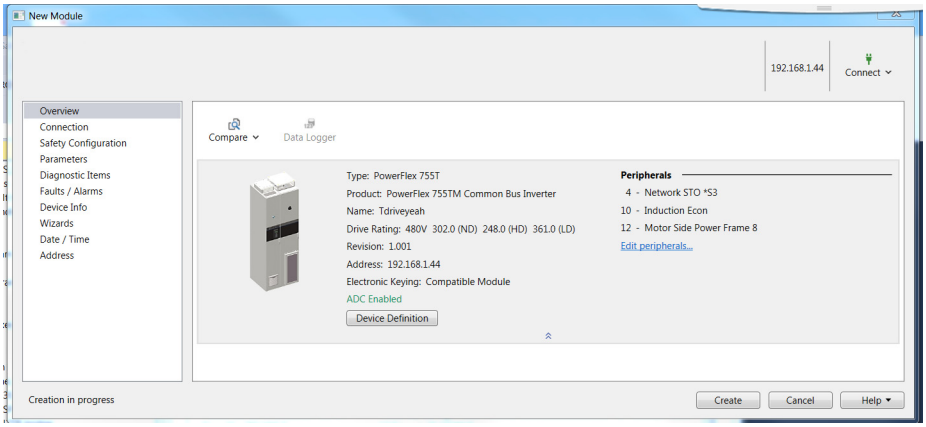

9. Continue with Generate the Safety Network Number (SNN) in the following section.

Generate the Safety Network Number (SNN)

The assignment of a time-based SNN is automatic when you create a GuardLogix safety controller project and add new Safety I/O devices.

Manual manipulation of an SNN is required in the following situations:

- If safety consumed tags are used
- If the project consumes safety input data from a device whose configuration is owned by some other device
- If a safety project is copied to another hardware installation within the same routable Safety system

If an SNN is assigned manually, the SNN has to be unique.

IMPORTANT If you assign an SNN manually, make sure that the system expansion does not result in duplication of SNN and node address combinations.

A warning appears if your project contains duplicate SNN and node address combinations. You can still verify the project, but Rockwell Automation recommends that you resolve the duplicate combinations.

To edit the SNN, follow these steps:

1. Click Safety Configuration in the navigation window.
2. Select either Time-based or Manual.

   If you select Manual, enter a value from 1...9999 decimal.
3. Click Generate.
4. Click OK.

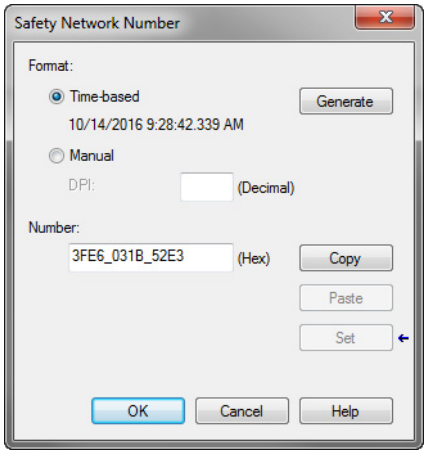

Configure Safety Connections

To configure the safety tab, follow these steps.

1. Click the Safety tab in the drive Module Properties dialog box.
2. Adjust the Safety Input Requested Packet Interval (RPI) as desired for your safety system.

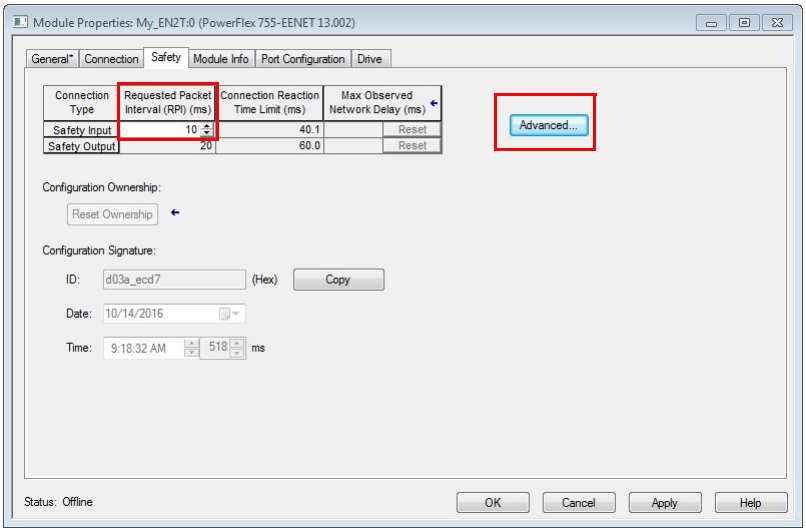

IMPORTANT If the drive is used with an induction motor, there is a general rule of no repeated (three or more) start/stops with less than 10 seconds between them (assumes the highest RPI of 500 ms is used). Otherwise a safety connection loss can occur. If less than 10 seconds is needed, a lower RPI can be used per the following formula:

RPI (ms) * 19 = Min. Repeated Start/Stop time (seconds)

For example, a 50 ms RPI equates to a minimum of 0.95 seconds required between repeated start/stops.

3. Click Advanced... for more advanced settings.

4. Configure the advanced settings as desired.

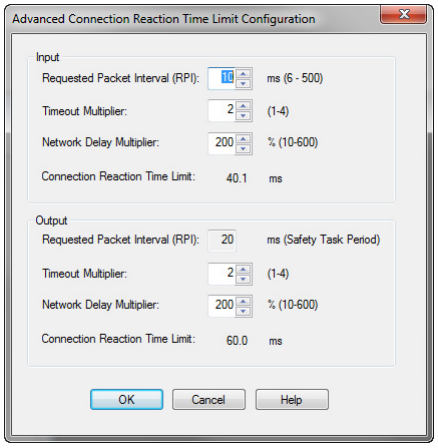

Advanced Reaction Connection Time Limit Configuration Settings	Description
Requested Packet Interval (RPI)	The RPI specifies the period that data updates over a connection. For example, an input module produces data at the RPI that you assign. For safety input connections, you can set the RPI on the Safety tab of the Module Properties dialog box. The RPI is entered in 1 ms increments, with a range of 6…500 ms. The default is 10 ms. The Connection Reaction Time Limit is adjusted immediately when the RPI is changed via the Logix Designer application. For safety output connections, the RPI is fixed at the safety task period. If the corresponding Connection Time Reaction Limit is not satisfactory, you can adjust the safety task period via the Safety Task Properties dialog box of the safety controller. See the user manual for the controller. For typical applications, the default RPI is sufficient. If you are experiencing nuisance connection timeouts, you can either increase the RPI or increase the Time Multiplier.
Timeout Multiplier	The Timeout Multiplier determines the number of RPIs to wait for a packet before declaring a connection timeout. This value translates into the number of messages that can be lost before a connection error is declared. For example, a Timeout Multiplier of 1 indicates that messages must be received during each RPI interval. A Timeout Multiplier of 2 indicates that one message can be lost as long as at least one message is received in two times the RPI (2 x RPI). If you are experiencing nuisance connection timeouts, you can either increase the Time Multiplier or increase the RPI.
Network Delay Multiplier	The Network Delay Multiplier defines the message transport time that the safety protocol enforces. The Network Delay Multiplier specifies the round-trip delay from the producer to the consumer and the acknowledge back to the producer. You can use the Network Delay Multiplier to reduce or increase the Connection Reaction Time Limit in cases where the enforced message transport time is significantly less or more than the RPI. For example, to adjust the Network Delay Multiplier is helpful when the RPI of an output connection is the same as a lengthy safety task period.
Connection Reaction Time Limit	The Connection Reaction Time Limit is the maximum age of safety packets on the associated connection. If the age of the data that is used by the consuming device exceeds the Connection Reaction Time Limit, a connection fault occurs. The following equations determine the Connection Reaction Time Limit: Input Connection Reaction Time Limit = Input RPI x [Timeout Multiplier + Network Delay Multiplier] Output Connection Reaction Time Limit = Safety Task Period x [Timeout Multiplier + Network Delay Multiplier - 1]

5. Click OK to close the drive Module Properties dialog box.

Safety Configuration Signature and Ownership

The connection between the controller and the drive is based on the following criteria:

- Drive catalog number must be for PowerFlex 755 drives, PowerFlex 755TL low harmonic drives, PowerFlex 755TR regenerative drives, or PowerFlex 755TM drive systems
- Drive Safety Network Number (SNN) (displayed on the General tab of the drive's Module Properties dialog box)
- GuardLogix slot number
- GuardLogix safety network number
- Path from the GuardLogix safety controller to the PowerFlex 755 drive or PowerFlex 755T drive product
- Configuration signature (displayed on the Safety tab of the drive's Module Properties dialog box)

If any differences are detected, the safety connection between the safety controller and the drive is not established (new drive/system) or lost (existing drive/system), and a yellow icon appears next to the drive in the controller project tree. Configuration Ownership has to be reset to establish (new) or re-establish (existing) the connection.

Reset Ownership

To reset ownership, see Restore the Drive to Out-of-Box State on page 26.

Safe Torque Off – Stop Category 0 Example Program

This safety task code is an example for a category 0 stop. The STO output is energized if the safety interlocks are satisfied, there are no faults, there is a valid connection, and there is a falling edge on the 'Safety_Reset' button.

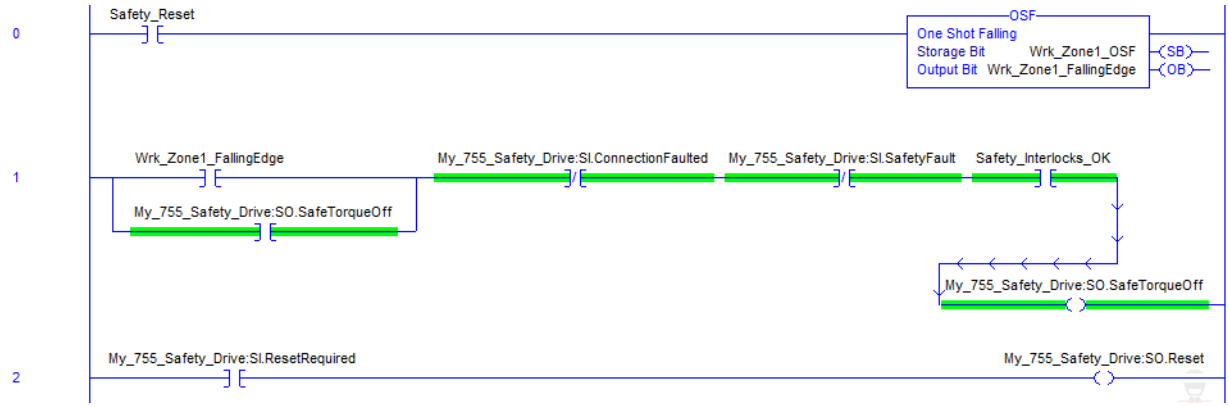

'Safety_Reset' and 'Safety_Interlocks_OK' come from elsewhere in the safety program:

- 'Safety_Reset' is the user-initiated manual reset action that is used in the safety system
- 'Safety_Interlocks_OK' are the safety interlocks that are used with this safety function

The accumulated 'Safety_Interlocks_OK' tag is used in the seal-in rung to drive the STO tag. When a demand is placed on safety interlocks and 'Safety_Interlocks_OK' goes to low (0), then the 20-750-S3 STO output immediately goes to low (0) as well. 'Safe Torque Off' (STO) remains off until a manual reset action is completed after the safety interlocks are satisfied.

Safe Torque Off – Stop Category 1 Example Program

This safety task code is an example for a category 1 stop. The STO output is energized if the safety interlocks are satisfied, there are no faults, there is a valid connection, and there is a falling edge on the 'Safety_Reset' button.

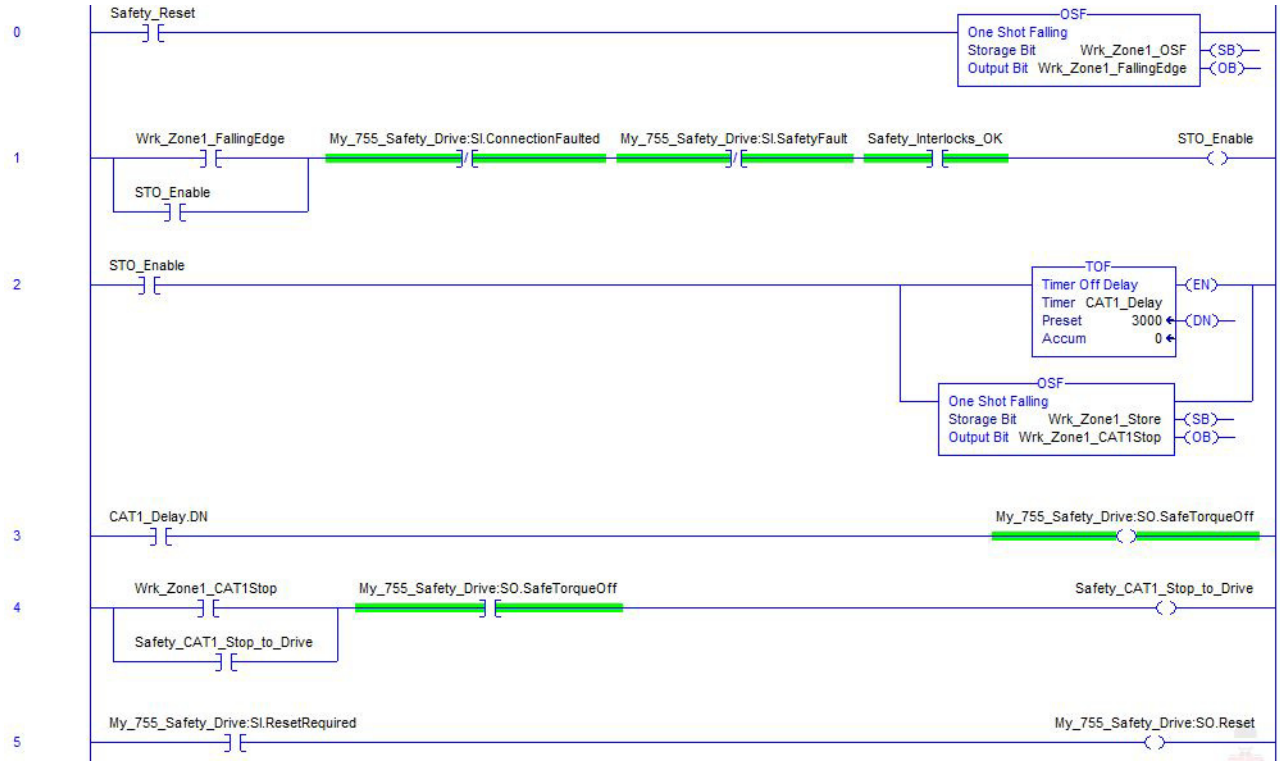

'Safety_Reset' and 'Safety_Interlocks_OK' come from elsewhere in the safety program:

- 'Safety_Reset' is the user-initiated manual reset action that is used in the safety system
- 'Safety_Interlocks_OK' are the safety interlocks that are used with this safety function

The accumulated 'Safety_Interlocks_OK' tag is used in the seal-in rung to drive the STO tag. When a demand is placed on the safety interlocks, then the 20-750-S3 STO output goes to low (0) after a three-second delay. The risk assessment determines the length of the delay. During the three-second delay, the 'Safety_CAT1_Stop_to_Drive' tag can be used in parallel with other main program stop logic to stop the drive in the main program.



'Safe Torque Off' (STO) remains off until a manual reset action is completed after the safety interlocks are satisfied.

Falling Edge Reset

ISO 13849-1 stipulates that instruction reset functions must occur on falling edge signals. To comply with this requirement, a One Shot Falling (OSF) instruction is used on the reset rung. Then, the OSF instruction Output Bit tag is used as the reset bit for the STO output or enable rungs.

Safety Tags in Standard Routines

Tags that are classified as safety tags are either controller-scoped or program-scoped.

- Controller-scoped safety tags are read by either standard or safety logic or other communication devices.
- Controller-scoped safety tags are written only by safety logic or another GuardLogix safety controller.

Program-scoped safety tags are accessible only by local safety routines. These routines reside within the safety program.

Standard Tags in Safety Routines (tag mapping)

Controller-scoped standard tags can be mapped into safety tags, providing a mechanism to synchronize standard and safety actions. In the Logix Designer application, click Logic > Map Safety Tags... to open the Safety Tag Mapping window.

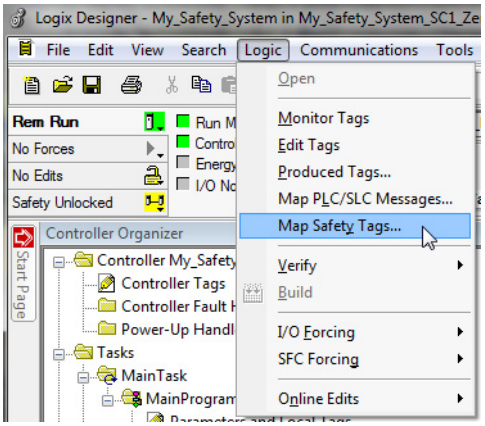

ATTENTION: When using standard data in a safety routine, you are responsible to verify that the data is used in an appropriate manner. The use of standard data in a safety tag does not make it safety data.

Do not directly control a safety output with standard tag data.

Safe Torque Off Fault Reset

To clear the STO Fault condition, a transition from logic 0 to 1 of the SO.Reset tag is required.

If the drive safety controller detects a fault, the input assembly tag SI.SafetyFault is set to 1.

IMPORTANT All PowerFlex 755 drives and PowerFlex 755T drive products enter the faulted state if any STO function fault is detected. See Table 16 on page 83 for integrated safety troubleshooting.

See Figure 4 on page 47 for an understanding of the PowerFlex 755 drive and PowerFlex 755T drive products state restart functionality.

Figure 4 - Reset Safe Torque Off Fault Diagram

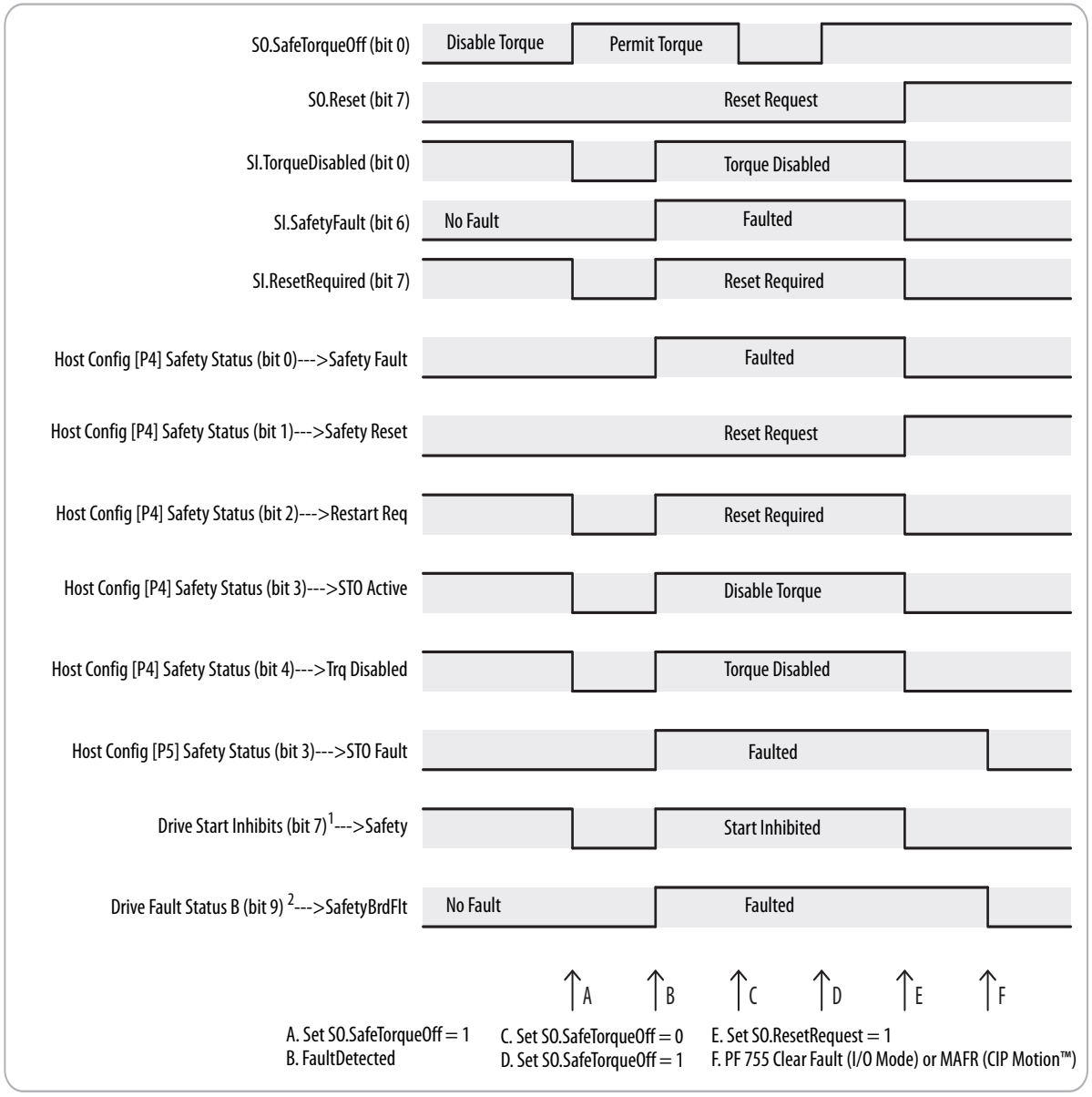

[1] Drive Start Inhibits is parameter 933 in PowerFlex 755 drives and parameter 603 in PowerFlex 755T drive products.

[2] Drive Fault Status B is parameter 953 in PowerFlex 755 drives and parameter 462 in PowerFlex 755T drive products.

Understand Integrated Safety Drive Replacement

GuardLogix controllers retain I/O device configuration onboard and are able to download the configuration to the replacement device.

IMPORTANT If the replacement card/module was used before, clear the existing configuration before installing the card/module on a safety network by resetting the card/module to Hardwired Safe Torque Off mode. See Out-of-Box State on page 26 for more information.

Replacing an entire PowerFlex 755 drive or PowerFlex 755T drive product on an integrated safety network is more involved than replacing standard devices because of the safety network number (SNN). The device number and SNN is the safety Device ID of the device. Safety devices require this complex identifier to make sure that duplicate device numbers do not compromise communication between the safety devices. The SNN is also used to provide integrity on the initial download to the PowerFlex 755 drive or PowerFlex 755T drive product.

When the Logix Designer application is online, the Safety tab of the Module Properties dialog box displays the current configuration ownership. When the opened project owns the configuration, Local is displayed.



A communication error is displayed if the module read fails. See Replace an Integrated Safety Drive in a GuardLogix System on page 48 for integrated safety drive replacement examples.

Replace an Integrated Safety Drive in a GuardLogix System

ATTENTION: During replacement or functional testing of a device, the safety of the system must not rely on any portion of the affected device.

IMPORTANT The replacement of safety devices requires that the replacement device is properly configured, and that the proper operation of the replacement device is verified.

Two options for I/O device replacement are available on the Safety tab of the Controller Properties dialog box in the Logix Designer application:

- Configure Only When No Safety Signature Exists
- Configure Always

Figure 5 - Safety I/O Replacement Options

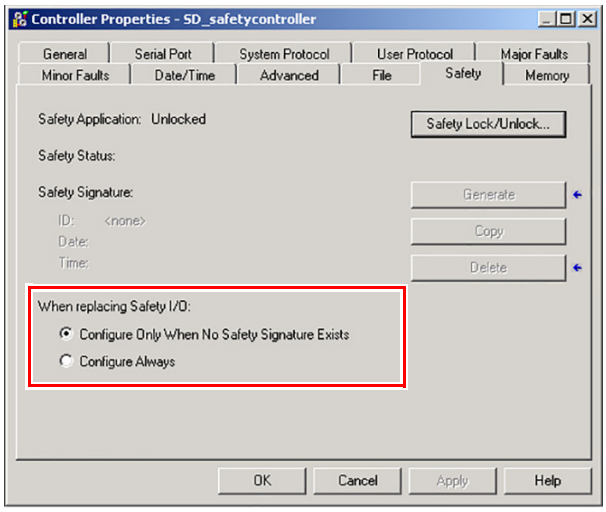

Configure Only When No Safety Signature Exists

This setting instructs the GuardLogix controller to configure a safety device only when the safety task does not have a safety task signature, and the replacement device is in out-of-box condition. Therefore, a safety network number does not exist in the safety device.

If the safety task has a safety task signature, the GuardLogix controller only configures the replacement Safety I/O device if the following is true:

- The device already has the correct safety network number.
- The device electronic keying is correct.
- The node or IP address is correct.

For detailed information on how to replace a safety I/O device, see the user manual for the safety controllers listed in the Additional Resources on page 10.

Configure Always

The GuardLogix controller always attempts to configure a replacement Safety I/O device if the device is in an out-of-box condition, meaning that a safety network number does not exist in the replacement safety device, and the node number and I/O device keying matches the configuration of the controller.



ATTENTION: Enable the Configure Always feature only if the entire safety control system is not being relied on to maintain SIL 3 behavior during the replacement and functional testing of a device.

If other parts of the Safety control system are being relied upon to maintain SIL 3, make sure that the 'Configure Always' feature in the controller is disabled.

It is your responsibility to implement a process to make sure that proper safety functionality is maintained during device replacement.



ATTENTION: If you place any devices in the out-of-box condition on any safety network when the Configure Always feature is enabled, follow the device replacement procedure in the respective controller user manual listed in the Additional Resources on page 10.

Integrated Motion – Network STO Programming and Operation

This chapter provides information for network installation and operation of the Integrated Safety - Safe Torque Off option module when used with Integrated Motion.

Topic	Page
Requirements	51
Description of Operation	51
Configure Safe Torque Off in the Logix Designer Application	54
Safe Torque Off – Stop Category 0 Example Program	61
Safe Torque Off – Stop Category 1 Example Program	62

Requirements

The following items are required:

- GuardLogix® 5580 or Compact GuardLogix 5380 controller
- Studio 5000 Logix Designer® application version 31 (or later)
- PowerFlex® 755 v14 firmware (or later)
- PowerFlex Integrated Motion profile version 19.00.00 (or later)

Integrated Motion support for PowerFlex 755T drive products is planned for a future drive firmware release.

Description of Operation

The Safe Torque Off (STO) feature provides a method, with sufficiently low probability of failure, to force the power-transistor control signals to a disabled state. When the command to execute the STO function is received from the GuardLogix controller, all the drive output-power transistors are released from the ON-state. This results in a condition where the drive is coasting. Disabling the power transistor output does not provide mechanical isolation of the electrical output that is required for some applications.

You can use the Safe Torque Off circuit in combination with other safety devices to achieve the stop and protection-against-restart as specified in IEC 60204-1. These conditions must be met for integrated control of the STO function:

- You must have a GuardLogix safety controller project with an EtherNet/IP® network connection configured.
- You must add the PowerFlex drive to the Ethernet network connection in the safety controller I/O tree.

The PowerFlex 755 drive STO function response time is less than 15 ms. Response time for the drive is the delay between the time the drive STO command receives the CIP Safety™ packet with an STO request and the time when motion producing power is removed from the motor.

Table 7 - Safe Torque Off Network Specifications

Attribute	Value
Safety connection RPI, min	6 ms
Input assembly connections (1)	1
Output assembly connections (1)	1

(1) Motion and Safety and Safety-only connections with the inverter uses 1 input assembly connection and 1 output assembly connection.

Safe Torque Off Assembly Tags

In Integrated Safe Torque Off (STO) mode, a GuardLogix 5580 or Compact GuardLogix 5380 safety controller controls the PowerFlex 755 Safe Torque Off function through the SO.SafeTorqueOff tag in the safety output assembly.

The SO.Command tags are sent from the GuardLogix safety output assembly to the PowerFlex 755 safety output assembly to control the Safe Torque Off function.

The SI.Status tags are sent from the PowerFlex 755 to the GuardLogix safety input assembly and indicate the PowerFlex 755 safety control status.

The SI.ConnectionStatus tags indicate the safety input connection status.

Table 8 lists the safety tags added to the controller tags when a PowerFlex 755 drive is added to a GuardLogix I/O configuration and the connection is configured for Motion and Safety or Safety-only.

The attribute values listed are the Assembly Object attribute values.

Table 8 - Integrated STO Specifications

Logix Designer Tag Name	Attribute [bit]	Type	Description
SI.ConnectionStatus (1) (2)		DINT	The ConnectionStatus data type contains RunMode and ConnectionFault status bits.
SI.RunMode	[0]	BOOL	See Table 9 for descriptions of the combinations of the RunMode and ConnectionFault states.
SI.ConnectionFault	[1]	BOOL	
SI.Status (1) (3)	**0x1A0**	SINT	
SI.TorqueDisabled	[0]	BOOL	0 = Torque Permitted 1 = Torque Disabled
SI.SafetyFault	[6]	BOOL	1 = STO fault present
SI.ResetRequired	[7]	BOOL	1 = Reset is required
SO.Command (1) (4)	**0x180**	SINT	
SO.SafeTorqueOff	[0]	BOOL	0 = Disable Permit 1 = Permit Torque
SO.Reset	[7]	BOOL	0 --> 1 = Reset STO fault

(1) Bits not listed are always zero.
(2) ConnectionStatus is determined by the Safety Validator in the GuardLogix controller.
(3) Status is sent from the drive to the controller using integrated safety protocol.
(4) Commands are sent from the controller to the drive using integrated safety protocol.

IMPORTANT Only the data listed in Table 8 is safety data with SIL 3 integrity.

Table 9 - Safety Connection Status

RunMode Status	ConnectionFaulted Status	Safety Connection Operation
1 = Run	0 = Valid	Data is actively being controlled by the producing device. The producing device is in Run mode.
0 = Idle	0 = Valide	The connection is active and the producing device is in the Idle state. The safety data is reset to zero.
0 = Idle	1 = Faulted	The safety connection is faulted. The state of the producing device is unknown. The safety data is reset to zero.
1	1	Invalid state.

Configure Safe Torque Off in the Logix Designer Application

This chapter provides instructions for how to add and configure an Integrated Safety - Safe Torque Off option module in a PowerFlex 755 drive in an existing project in the Logix Designer application. This chapter is specific to safety and does not cover all aspects of drive configuration.

Before you can configure your option module in the Logix Designer application:

- You must have a safety controller project with an EtherNet/IP network connection configured and Time Sync enabled. See the documentation for your controller, drive, and Ethernet adapter for information on configuring those products (see Additional Resources on page 10).
- You must add a drive and option card to your project.

To set up your drive with the 20-750-S3 option card, you must configure the following attributes, in addition to the drive's IP address, revision, ratings, and power structure settings:

Port	Integrated Motion: Port 6 only

Electronic Keying	
Exact Match	Indicates that all keying attributes must match to establish communication. If any attribute does not match precisely, communication with the device does not occur.
Compatible Module	Lets the installed device accept the key of the device that is defined in the project when the installed device can emulate the defined device. With Compatible Module, you can typically replace a device with another device that has the following characteristics: • Same catalog number • Same or higher Major Revision • Minor Revision as follows: – If the Major Revision is the same, the Minor Revision must be the same or higher. – If the Major Revision is higher, the Minor Revision can be any number.
Disable Keying	Indicates that the keying attributes are not considered when attempting to communicate with a device. With Disable Keying, communication can occur with a device other than the type specified in the project. **ATTENTION:** Disable Keying is not permitted for safety devices.

Connection	Description	Requires Controller Firmware Revision
Motion	Integrated Motion on an EtherNet/IP network is managed by this controller. Safety is managed by another controller and can be either networked or hardwired.	31.000(1) or later for ControlLogix 5570 and GuardLogix 5580 31.000(1) or later for Compact Logix 5370 and Compact GuardLogix 5380
Motion and Safety	Integrated Motion on an EtherNet/IP network and integrated STO are managed by this controller. A Motion and Safety connection can only be made from a GuardLogix controller.	31.000 or later for GuardLogix 5580 and Compact GuardLogix 5380
Safety Only	Network safety connection is managed by this controller. Control is managed by another controller. A Safety connection can only be made from a GuardLogix controller.	

(1) Firmware revision 30.011 can be used if the drive is used in Standard I/O Mode.

Add a PowerFlex 755 Drive to the Controller Project

1. Right-click EtherNet network and choose New Module.

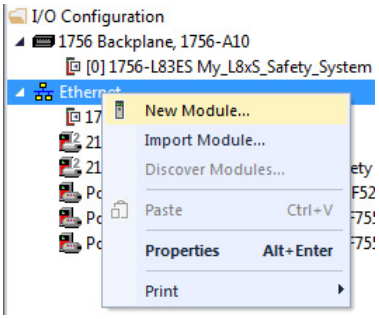

2. Select a PowerFlex 755 drive for Integrated Motion on EtherNet/IP networks (selection catalog number ends in –CM-S3 for drives with network STO option).

Catalog Number	Description	Vendor	Category
PowerFlex 755 HiPwr PMM-EENET	High Power AC Drive, Permanent Magnet Motor, Deep Well	Rockwell Autom...	Drive
PowerFlex 755 HiPwr-EENET	AC Drive via Embedded Enet (Frame 8 and higher)	Rockwell Autom...	Drive
PowerFlex 755 HiPwr-ENETR	AC Drive via ENETR (Frame 8 and higher)	Rockwell Autom...	Drive
PowerFlex 755 HiPwr-NET-E	AC Drive via 20-COMM-E (Frame 8 and higher)	Rockwell Autom...	Drive
PowerFlex 755 PMM-EENET	AC Drive, Permanent Magnet Motor, Deep Well	Rockwell Autom...	Drive
PowerFlex 755-EENET	AC Drive via Embedded Enet	Rockwell Autom...	Drive
PowerFlex 755-EENET-CM	PowerFlex 755 AC Drive via Embedded Ethernet - CIP Motion	Rockwell Autom...	Drive,Motion
PowerFlex 755-EENET-CM-S	PowerFlex 755 AC Drive via Embedded Ethernet - CIP Motion/Safe Torque-Off	Rockwell Autom...	Drive,Motion
PowerFlex 755-EENET-CM-S1	PowerFlex 755 AC Drive via Embedded Ethernet - CIP Motion/Safe Speed Monitor	Rockwell Autom...	Safety,Drive,Mot...
PowerFlex 755-EENET-CM-S3	PowerFlex 755 AC Drive via Embedded Ethernet - CIP Motion/S3 Safety Option	Rockwell Autom...	Safety,Drive,Mot...
PowerFlex 755-EENET-CM-S4	PowerFlex 755 AC Drive via Embedded Ethernet - CIP Motion/S4 Safety Option	Rockwell Autom...	Safety,Drive,Mot...
PowerFlex 755-ENETR	AC Drive via ENETR	Rockwell Autom...	Drive
PowerFlex 755-HiPwr-EENET-CM	PowerFlex 755 High Power AC Drive via Embedded Ethernet - CIP Motion	Rockwell Autom...	Drive,Motion
PowerFlex 755-HiPwr-EENET-CM-S	PowerFlex 755 High Power AC Drive via Embedded Ethernet - CIP Motion/Safe T...	Rockwell Autom...	Drive,Motion
PowerFlex 755-HiPwr-EENET-CM-S1	PowerFlex 755 High Power AC Drive via Embedded Ethernet - CIP Motion/Safe S...	Rockwell Autom...	Safety,Drive,Mot...
PowerFlex 755-HiPwr-EENET-CM-S3	PowerFlex 755 High Power AC Drive via Embedded Ethernet - CIP Motion/S3 Saf...	Rockwell Autom...	Safety,Drive,Mot...
PowerFlex 755-HiPwr-EENET-CM-S4	PowerFlex 755 High Power AC Drive via Embedded Ethernet - CIP Motion/S4 Saf...	Rockwell Autom...	Safety,Drive,Mot...
PowerFlex 755-NET-E	AC Drive via 20-COMM-E	Rockwell Autom...	Drive

3. Configure an Option Card on a PowerFlex 755 Drive in Integrated Motion on EtherNet/IP Network Applications as described in the following section.

Configure an Option Card on a PowerFlex 755 Drive in Integrated Motion on EtherNet/IP Network Applications

1. On the New Module dialog box, name the drive.
2. Type the IP Address.

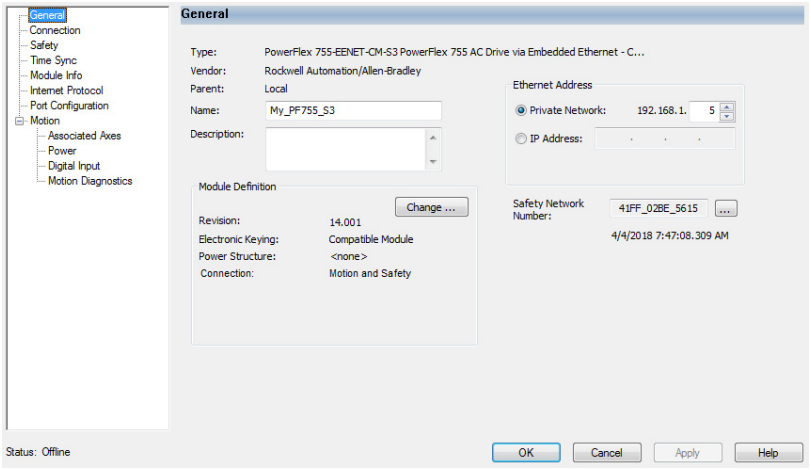

3. Click Change to edit the Module Definition.

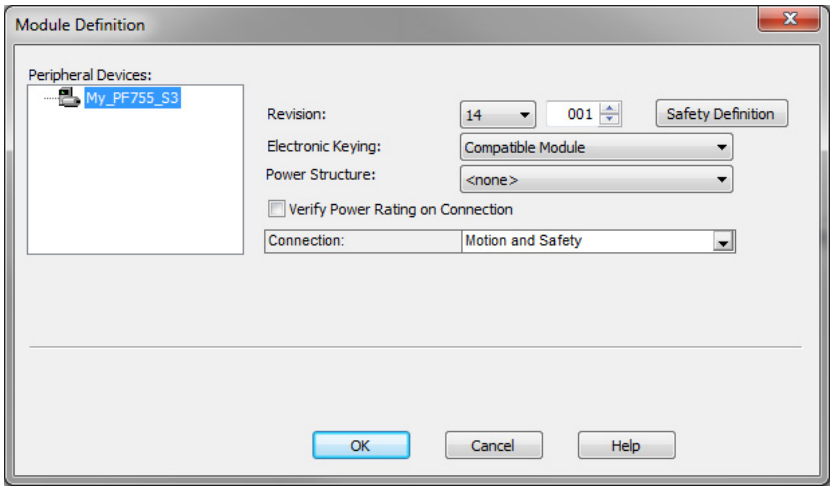

4. On the Module Definition dialog box, configure the drive's properties:
   a. Revision
   b. Electronic Keying
   c. Power Structure
   d. Connection Type
5. If desired, check the box to verify the power rating on connection.

6. Click Safety Definition to configure 20-750-S3 revision and Electronic Keying.

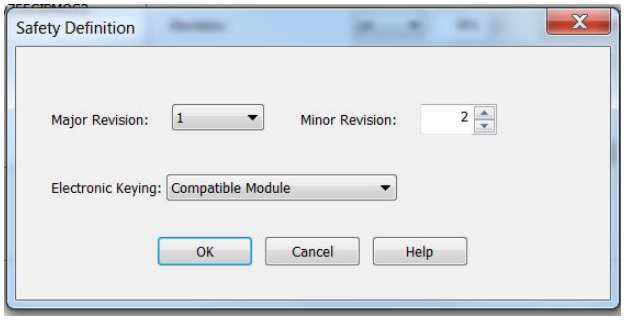

7. Click OK to close the Safety Definition dialog box.
8. Click OK to close the Module Definition dialog box.

   Note that the Safety Network Number (SNN) is on the General page and that there is a Safety page.
9. Continue with Generate the SNN as described in the following section.

Generate the Safety Network Number (SNN)

The assignment of a time-based SNN is automatic when you create a GuardLogix safety controller project and add new Safety I/O devices.

Manual manipulation of an SNN is required in the following situations:

- If safety consumed tags are used
- If the project consumes safety input data from a device whose configuration is owned by some other device
- If a safety project is copied to another hardware installation within the same routable Safety system

If an SNN is assigned manually, the SNN has to be unique.

IMPORTANT	If you assign an SNN manually, make sure that the system expansion does not result in duplication of SNN and node address combinations. A warning appears if your project contains duplicate SNN and node address combinations. You can still verify the project, but Rockwell Automation recommends that you resolve the duplicate combinations.

To edit the SNN, follow these steps.

1. To open the Safety Network Number dialog box, click ... to the right of the Safety Network Number.
2. Select either Time-based or Manual.

   If you select Manual, enter a value from 1...9999 decimal.

3. Click Generate.
4. Click OK.

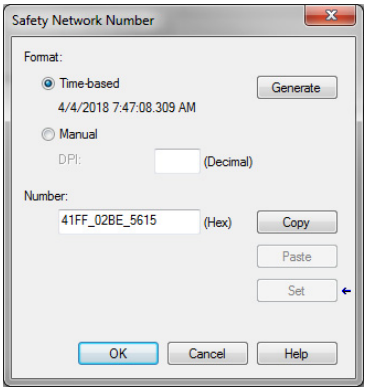

Configure Safety Connections

To configure the safety tab, follow these steps.

1. Click the Safety tab in the drive Module Properties.
2. Adjust the Safety Input Requested Packet Interval (RPI) as desired for your safety system.

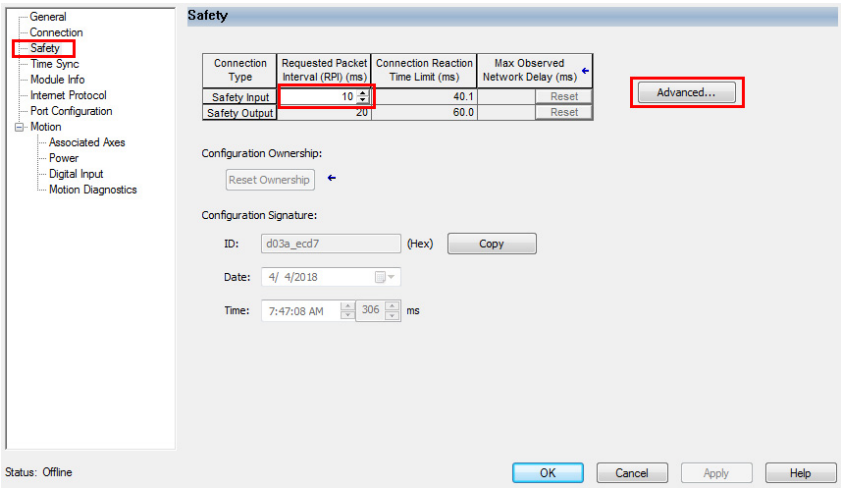

IMPORTANT If the drive is used with an induction motor, there is a general rule of no repeated (three or more) start/stops with less than 10 seconds between them (assumes the highest RPI of 500 ms is used). Otherwise a safety connection loss can occur. If less than 10 seconds is needed, a lower RPI can be used per the following formula:

RPI (ms) * 19 = Min. Repeated Start/Stop time (seconds)

For example, a 50 ms RPI equates to a minimum of 0.95 seconds required between repeated start/stops.

3. Click Advanced... for more advanced settings.
4. Configure the advanced settings as desired.

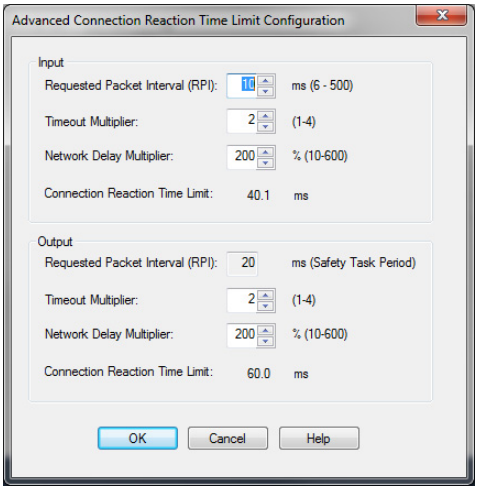

Advanced Reaction Connection Time Limit Configuration Settings	Description
Requested Packet Interval (RPI)	The RPI specifies the period that data updates over a connection. For example, an input module produces data at the RPI that you assign. For safety input connections, you can set the RPI on the Safety tab of the Module Properties dialog box. The RPI is entered in 1 ms increments, with a range of 6. . .500 ms. The default is 10 ms. The Connection Reaction Time Limit is adjusted immediately when the RPI is changed via the Logix Designer application. For safety output connections, the RPI is fixed at the safety task period. If the corresponding Connection Time Reaction Limit is not satisfactory, you can adjust the safety task period via the Safety Task Properties dialog box of the safety controller. See the user manual for the controller. For typical applications, the default RPI is sufficient.
Timeout Multiplier	The Timeout Multiplier determines the number of RPIs to wait for a packet before declaring a connection timeout. This value translates into the number of messages that can be lost before a connection error is declared. For example, a Timeout Multiplier of 1 indicates that messages must be received during each RPI interval. A Timeout Multiplier of 2 indicates that one message can be lost as long as at least one message is received in two times the RPI (2 x RPI).
Network Delay Multiplier	The Network Delay Multiplier defines the message transport time that the safety protocol enforces. The Network Delay Multiplier specifies the round-trip delay from the producer to the consumer and the acknowledge back to the producer. You can use the Network Delay Multiplier to reduce or increase the Connection Reaction Time Limit in cases where the enforced message transport time is significantly less or more than the RPI. For example, to adjust the Network Delay Multiplier is helpful when the RPI of an output connection is the same as a lengthy safety task period.
Connection Reaction Time Limit	The Connection Reaction Time Limit is the maximum age of safety packets on the associated connection. If the age of the data that is used by the consuming device exceeds the Connection Reaction Time Limit, a connection fault occurs. The following equations determine the Connection Reaction Time Limit: Input Connection Reaction Time Limit = Input RPI x [Timeout Multiplier + Network Delay Multiplier] Output Connection Reaction Time Limit = Safety Task Period x [Timeout Multiplier + Network Delay Multiplier - 1]

5. Click OK.

Safety Configuration Signature and Ownership

The connection between the controller and the drive is based on the following criteria:

- Drive catalog number must be for PowerFlex 755 drives
- Drive Safety Network Number (SNN) (displayed in the drive's Module Properties dialog box.)
- GuardLogix slot number
- GuardLogix safety network number
- Path from the GuardLogix 5580 safety controller or Compact GuardLogix 5380 safety controller to the PowerFlex 755 drive
- Configuration signature (displayed on the Safety tab of the drive Module Properties dialog box)

If any differences are detected, the safety connection between the safety controller and the drive is not established (new drive/system) or lost (existing drive/system), and a yellow icon appears next to the drive in the controller project tree. Configuration Ownership has to be reset to establish (new) or re-establish (existing) the connection.

Reset Ownership

To reset ownership, see Restore the Drive to Out-of-Box State on page 26.

Safe Torque Off – Stop Category 0 Example Program

This safety task code is an example for a category 0 stop. The STO output is energized if the safety interlocks are satisfied, there are no faults, there is a valid connection, and there is a falling edge on the 'Safety_Reset' button.

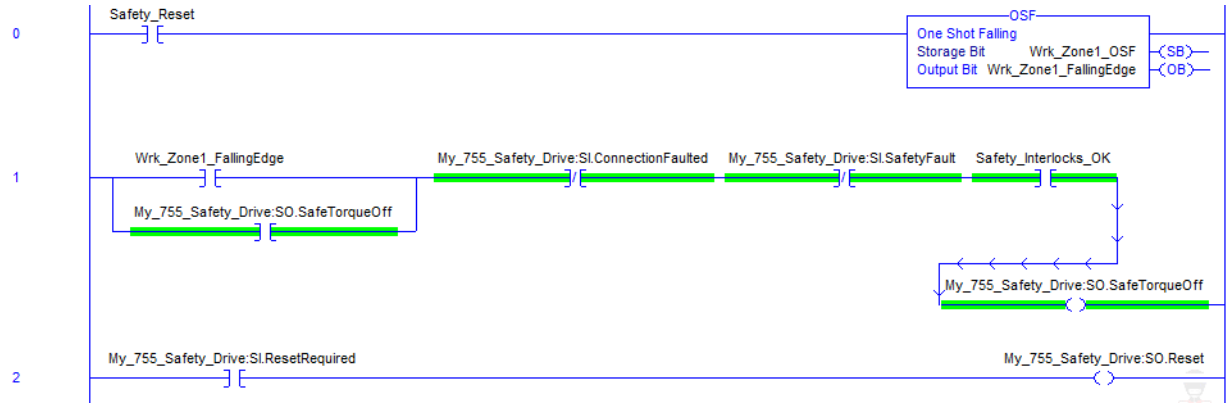

'Safety_Reset' and 'Safety_Interlocks_OK' come from elsewhere in the safety program:

- 'Safety_Reset' is the user-initiated manual reset action that is used in the safety system
- 'Safety_Interlocks_OK' are the safety interlocks that are used with this safety function

The accumulated 'Safety_Interlocks_OK' tag is used in the seal-in rung to drive the STO tag. When a demand is placed on safety interlocks and 'Safety_Interlocks_OK' goes to low (0), then the 20-750-S3 STO output immediately goes to low (0) as well. 'Safe Torque Off' (STO) remains off until a manual reset action is completed after the safety interlocks are satisfied.

Safe Torque Off – Stop Category 1 Example Program

This safety task code is an example for a category 1 stop. The STO output is energized if the safety interlocks are satisfied, there are no faults, there is a valid connection, and there is a falling edge on the 'Safety_Reset' button.

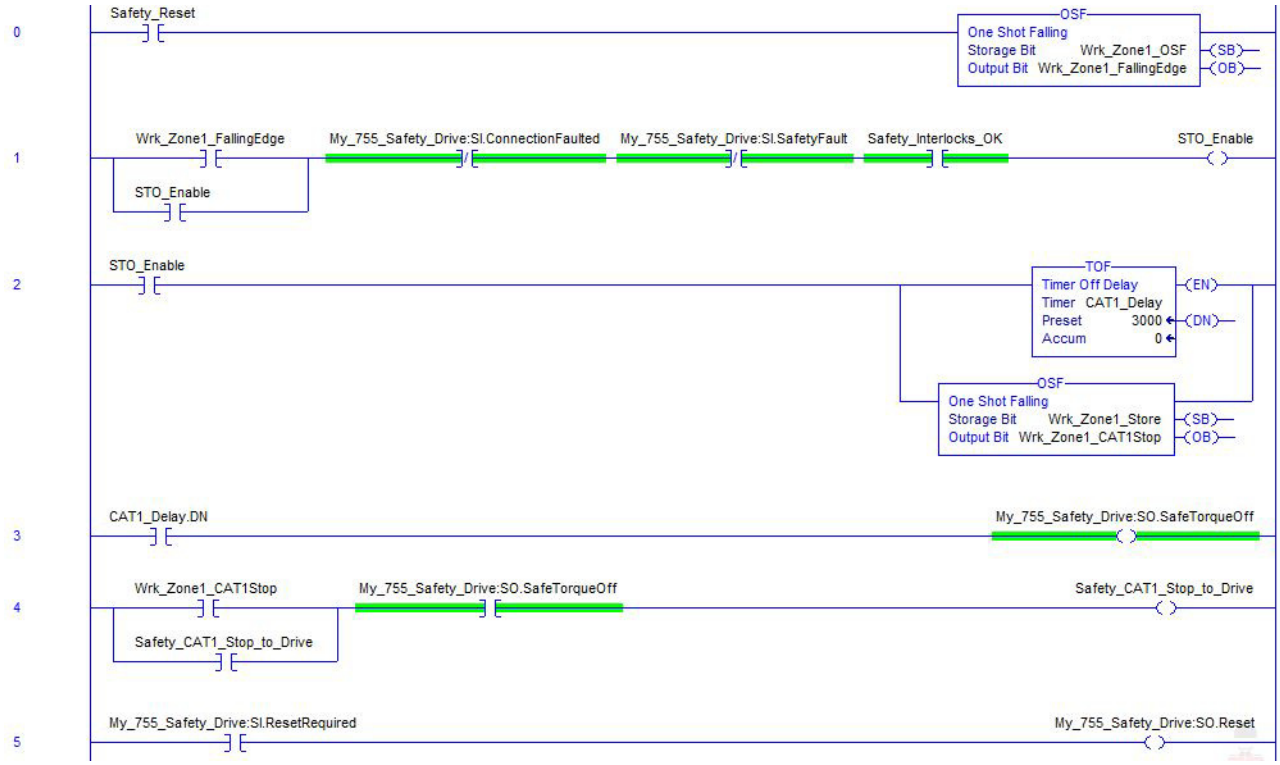

'Safety_Reset' and 'Safety_Interlocks_OK' come from elsewhere in the safety program:

- 'Safety_Reset' is the user-initiated manual reset action that is used in the safety system
- 'Safety_Interlocks_OK' are the safety interlocks that are used with this safety function

The accumulated 'Safety_Interlocks_OK' tag is used in the seal-in rung to drive the STO tag. When a demand is placed on the safety interlocks, then the 20-750-S3 STO output goes to low (0) after a three-second delay. The risk assessment determines the length of the delay. During the three-second delay, the 'Safety_CAT1_Stop_to_Drive' tag can be used in parallel with other main program stop logic to stop the drive in the main program.

'Safe Torque Off' (STO) remains off until a manual reset action is completed after the safety interlocks are satisfied.

Falling Edge Reset

ISO 13849-1 stipulates that instruction reset functions must occur on falling edge signals. To comply with this requirement, a One Shot Falling (OSF)

instruction is used on the reset rung. Then, the OSF instruction Output Bit tag is used as the reset bit for the STO output or enable rungs.

Safety Tags in Standard Routines

Tags that are classified as safety tags are either controller-scoped or program-scoped.

- Controller-scoped safety tags are read by either standard or safety logic or other communication devices.
- Controller-scoped safety tags are written only by safety logic or another GuardLogix safety controller.

Program-scoped safety tags are accessible only by local safety routines. These routines reside within the safety program.

Standard Tags in Safety Routines (tag mapping)

Controller-scoped standard tags can be mapped into safety tags, providing a mechanism to synchronize standard and safety actions. In the Logix Designer application, click Logic > Map Safety Tags... to open the Safety Tag Mapping window.

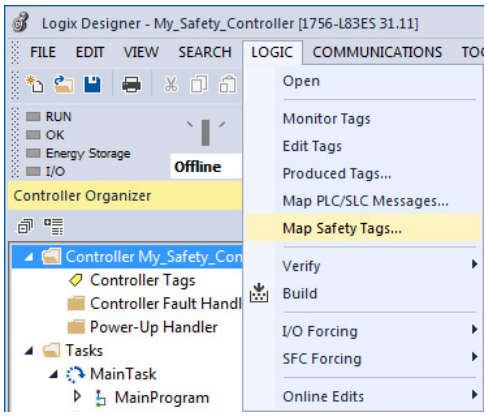

ATTENTION: When using standard data in a safety routine, you are responsible to verify that the data is used in an appropriate manner. The use of standard data in a safety tag does not make it safety data.

Do not directly control a safety output with standard tag data.

STO Fault Reset

To clear the STO Fault condition, a transition from logic 0 to 1 of the SO.Reset tag is required.

If the PowerFlex 755 drive safety controller detects a fault, the input assembly tag SI.SafetyFault is set to 1.

To reset an Axis.SafetyFault, a Motion Axis Fault Reset (MAFR) command must be issued.

IMPORTANT The PowerFlex drive will enter the faulted state if a STO function fault is detected. See Table 10 for integrated safety troubleshooting.

See Figure 6 for an understanding of the PowerFlex 755 STO state restart functionality.

Figure 6 - Reset Safe Torque Off Fault Diagram

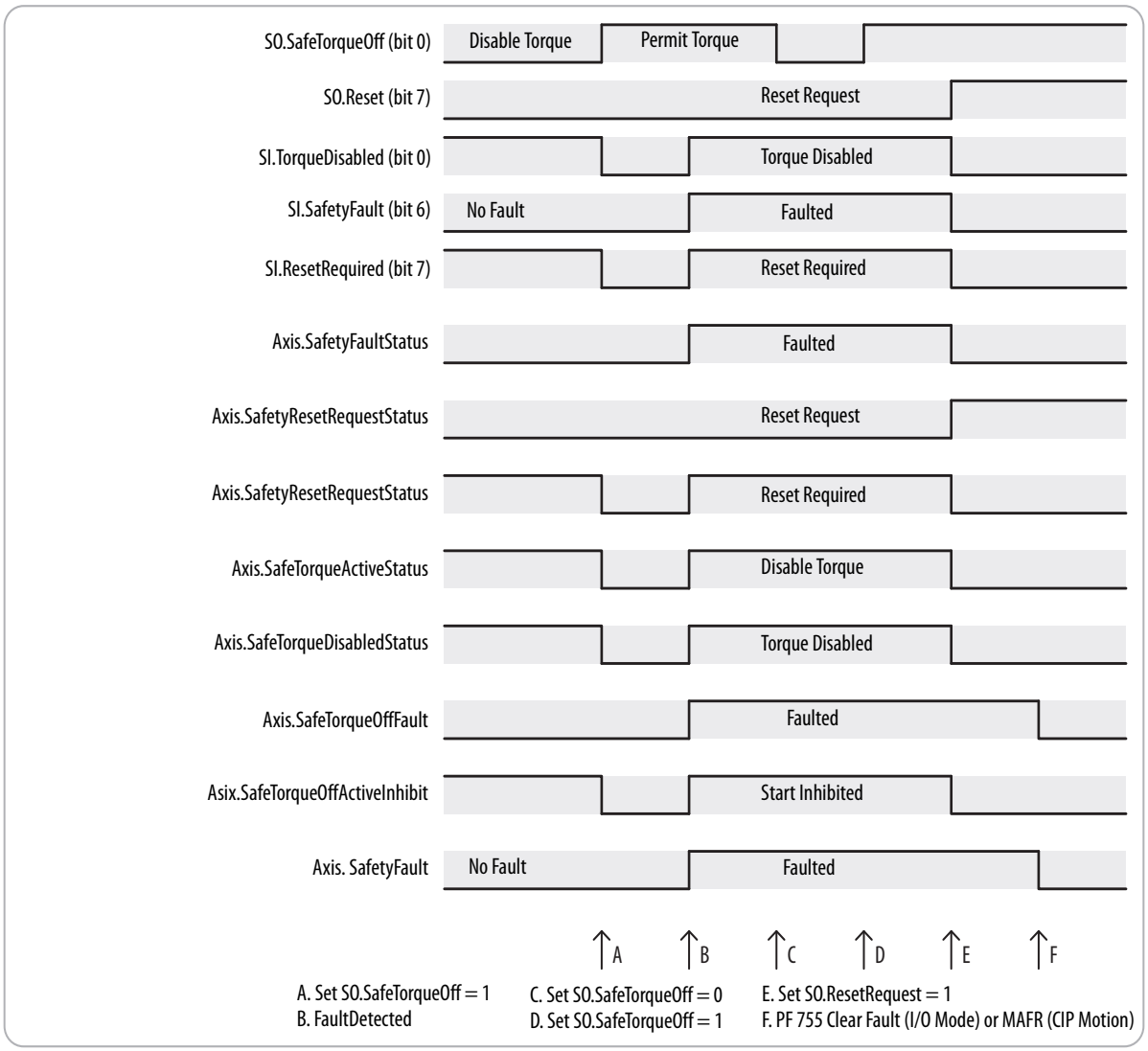

Troubleshoot the Safe Torque Off Function

Table 10 - PowerFlex 755 Integrated STO

Fault Message Logix Designer	Problem	Possible Solutions
SafetyFault	Drive safety diagnostic detected internal STO design failure.	• Cycle drive control power • Return drive and/or option module for repair if fault continues
SafeTorqueOffFault (1)	Drive safety diagnostic detected internal STO design failure or hardwired input received while in integrated safety mode.	• Check the cause of the fault using an MSG instruction. See Safe Torque Off Faults on page 86. • Remove any connection to the hardwired safety inputs and reset using the STO Fault Reset procedure. See STO Fault Reset on page 64. • Execute STO function. • Return drive and/or option module for repair if fault continues.
InvalidSafetyFirmwareFault (2)	Invalid safety firmware.	• Cycle control power. • Upgrade the drive firmware. • Call Technical Support. • Return drive for repair if fault continues.

(1) Displayed in the Quick View Pane as Safety Fault.
(2) Displayed in the Quick View Pane as Initialization Fault.

Understand Integrated Safety Drive Replacement

GuardLogix controllers retain I/O device configuration onboard and are able to download the configuration to the replacement device.

IMPORTANT If the replacement option module was used previously, clear the existing configuration before installing it on a safety network. See Out-of-Box State on page 26.

Replacing a PowerFlex 755 drive that is on an integrated safety network is more complicated than replacing standard devices because of the safety network number (SNN). The device number and SNN make up the safety device's DeviceID. Safety devices require this more complex identifier to make sure that duplicate device numbers do not compromise communication between the correct safety devices. The SNN is also used to provide integrity on the initial download to the drive.

When the Logix Designer application is online, the Safety tab of the Module Properties dialog box displays the current configuration ownership. When the opened project owns the configuration, Local is displayed.



A communication error is displayed if the module read fails. See Replace an Integrated Safety Drive in a GuardLogix System on page 66 for integrated safety drive replacement information.

Replace an Integrated Safety Drive in a GuardLogix System

When you replace an integrated safety drive, the replacement device must be configured properly and the replacement drives operation be user-verified.

ATTENTION: During drive replacement or functional test, the safety of the system must not rely on any portion of the affected drive.

Two options for safety drive replacement are available on the Safety tab of the Controller Properties dialog box in the Logix Designer application:

- Configure Only When No Safety Signature Exists
- Configure Always

Figure 7 - Safety Drive Replacement Options

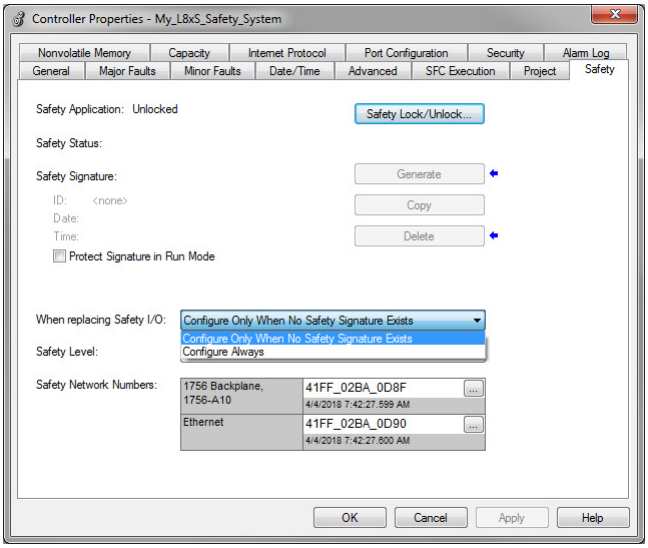

Configure Only When No Safety Signature Exists

This setting instructs the GuardLogix controller to automatically configure a safety drive only when the safety task does not have a safety task signature, and the replacement drive is in an out-of-box condition, meaning that a safety network number does not exist in the safety drive.

If the safety task has a safety task signature, the GuardLogix controller automatically configures the replacement CIP Safety I/O device only if the following is true:

- The device already has the correct safety network number.
- The device electronic keying is correct.
- The node or IP address is correct.

For details, see information about replacing a safety I/O device in the GuardLogix 5580 Controllers User Manual, publication 1756-UM543 or Compact GuardLogix 5380 Controllers User Manual, publication 5069-UM001.

Configure Always

When the Configure Always feature is enabled, the controller automatically checks for and connects to a replacement drive that meets all of the following requirements:

- The controller has configuration data for a compatible drive at that network address
- The drive is in Hardwired STO mode or has an SNN that matches the configuration



ATTENTION: Enable the Configure Always feature only if the entire integrated safety control system is not being relied on to maintain SIL 3 behavior during the replacement and functional testing of a PowerFlex 755 drive.

If other parts of the integrated safety control system are being relied upon to maintain SIL 3, make sure that the controller's Configure Always feature is disabled.

It is your responsibility to implement a process to make sure proper safety functionality is maintained during device replacement.



ATTENTION: Do not place any devices in the out-of-box condition on any integrated safety network when the Configure Always feature is enabled, except while following the device replacement procedure in the GuardLogix user manual appropriate for your Logix5000 controller:

- GuardLogix 5580 Controllers User Manual, publication 1756-UM543
- Compact GuardLogix 5580 Controllers User Manual, publication 5069-UM001

Motion Direct Commands in Motion Control Systems

You can use the Motion Direct Command (MDC) feature to initiate motion while the controller is in Program mode, independent of application code that is executed in Run mode. These commands let you perform various functions, for example, move an axis, jog an axis, or home an axis.

A typical use might involve a machine integrator testing different parts of the motion system while the machine is being commissioned or a maintenance engineer, under certain restricted scenarios in accordance with safe machine operating procedures, wanting to move an axis (like a conveyor) to clear a jam before resuming normal operation.



ATTENTION: To avoid personal injury or damage to equipment, follow these rules regarding Run mode and Program mode.

- Only authorized, trained personnel with knowledge of safe machine operation should be allowed to use Motion Direct Commands
- Additional supervisory methods, like removing the controller key switch, should be used to maintain the safety integrity of the system after returning the safety controller to RUN mode

Understand STO Bypass When Using Motion Direct Commands

If a Safety-only connection between the GuardLogix safety controller and the PowerFlex 755 drive was established at least once after the drive was received from the factory, the drive does not allow motion while the safety controller is in Program mode by default.

This is because the safety task is not executed while the GuardLogix safety controller is in Program mode. This applies to applications running in a single-safety controller (with Motion and Safety connections). When an integrated safety drive has a Motion connection to a standard controller and a separate Safety connection to a dual-safety controller, the standard controller can transition to Program mode while the safety controller stays in Run mode and continues to execute the safety task.

However, PowerFlex 755 drive systems are designed with a bypass feature for the STO function in single-safety controller configurations. You can use the MDC feature to allow motion while following all the necessary and prescribed steps per your machine's safety operating procedures.



ATTENTION: Consider the consequences of allowing motion through the use of MDC when the controller is in Program mode. You must acknowledge warning messages in the Logix Designer application that warn of the drive bypassing the STO function and unintended motion can occur. The integrated safety drive does not respond to requests of the STO function if MDC mode is entered.
It is your responsibility to maintain machine safety integrity while executing motion direct commands. One alternative is to provide ladder logic for Machine Maintenance mode that leaves the controller in Run mode with safety functions executing.

Logix Designer Application Warning Messages

When the controller is in Run mode, executing safety functions, the PowerFlex 755 drive follows the commands that it receives from the safety controller. The controller reports Safety State = Running and Axis State = Stopped/Running, as shown in Figure 8.

Figure 8 - Safety State Indications When Controller is in Run Mode (safety task executing)

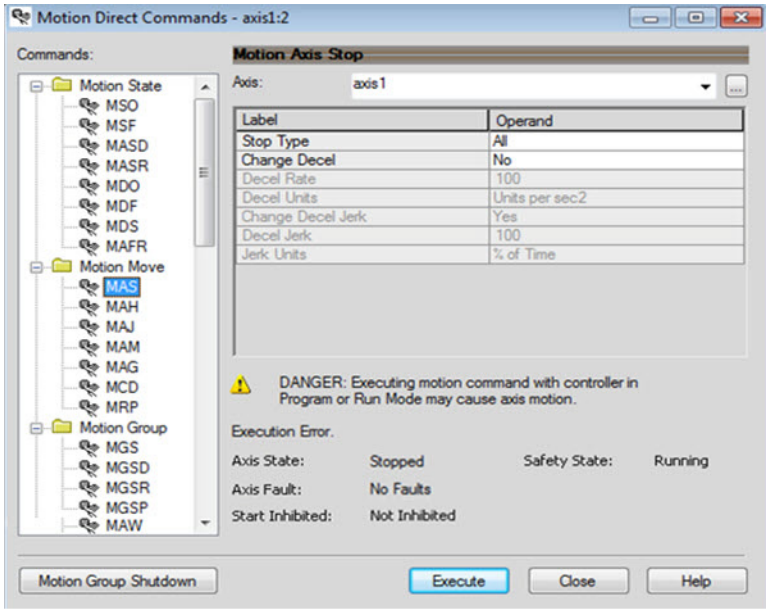

When the controller transitions to Program mode, the integrated safety drive is in the safe state (torque is not permitted). The controller reports Safety State = Not Running and Axis State = Start Inhibited, as shown in Figure 9).

Figure 9 - Safety State Indications After Controller Transitions to Program Mode

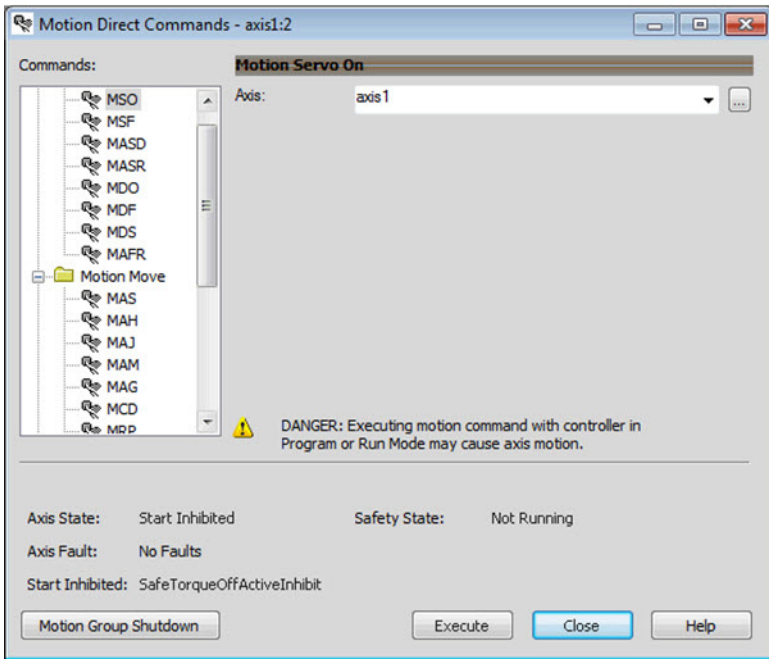

When you issue a motion direct command to an axis to produce torque in Program mode, for example MSO or MDS, with the safety connection present to the drive, a warning message is presented before the motion direct command is executed, as shown in Figure 10.

Figure 10 - STO Bypass Prompt When the Safety Controller is in Program Mode

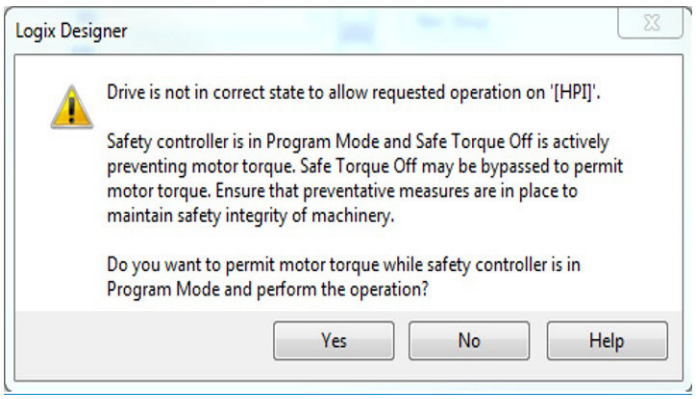

IMPORTANT The warning in Figure 10 is displayed only the first time a motion direct command is issued.

After you acknowledge the warning message by clicking Yes, torque is permitted by the drive and a warning message is indicated in the software as shown in Figure 11. The controller reports Safety State = Not Running (Torque Permitted), Axis State = Stopped/Running and Persistent Warning = Safe Torque Off Bypassed.

IMPORTANT Switch the controller to Run mode to exit Motion Direct Command mode and end the STO function bypass.

Figure 11 - Safety State Indications After Controller Transitions to Program Mode (MDC executing)

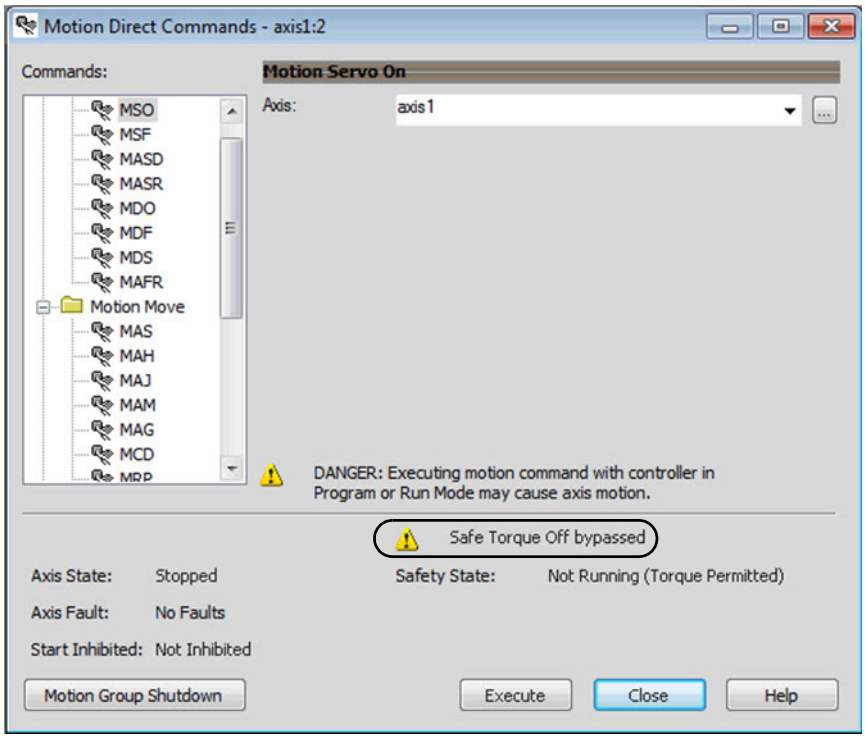

IMPORTANT The persistent warning message text Safe Torque Off bypassed appears when a motion direct command is executed.

The warning message persists even after the dialog is closed and reopened as long as the integrated safety drive is in STO Bypass mode.

The persistent warning message is removed only after the integrated safety drive's Safety State is restored to the Running state.

Torque Permitted in a Multi-workstation Environment

The warning in Figure 12 is displayed to notify a second user working in a multi-workstation environment that the first user has placed the integrated safety drive in the STO state and that the current action is about to bypass the STO state and permit torque.

Figure 12 - STO Bypass Prompt When MDC is Issued in Multi-workstation Environment

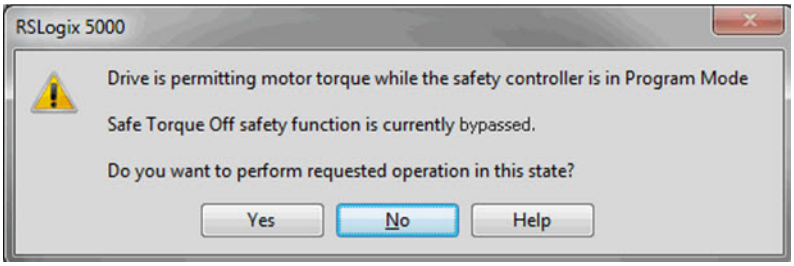

Warning Icon and Text in Axis Properties

In addition to the other warnings that require your acknowledgement, the Logix Designer application also provides warning icons and persistent warning messages in other Axis Properties dialog boxes when the integrated safety drive is in STO Bypass mode.

Figure 13 - Axis and Safe State Indications on the Hookup Services Dialog Box

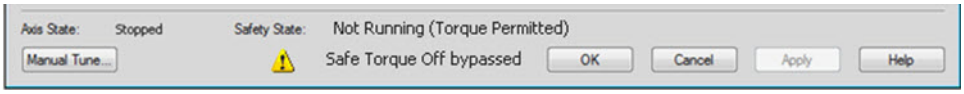

Figure 14 - Axis and Safe State Indications on Motion Direct Commands Dialog Box

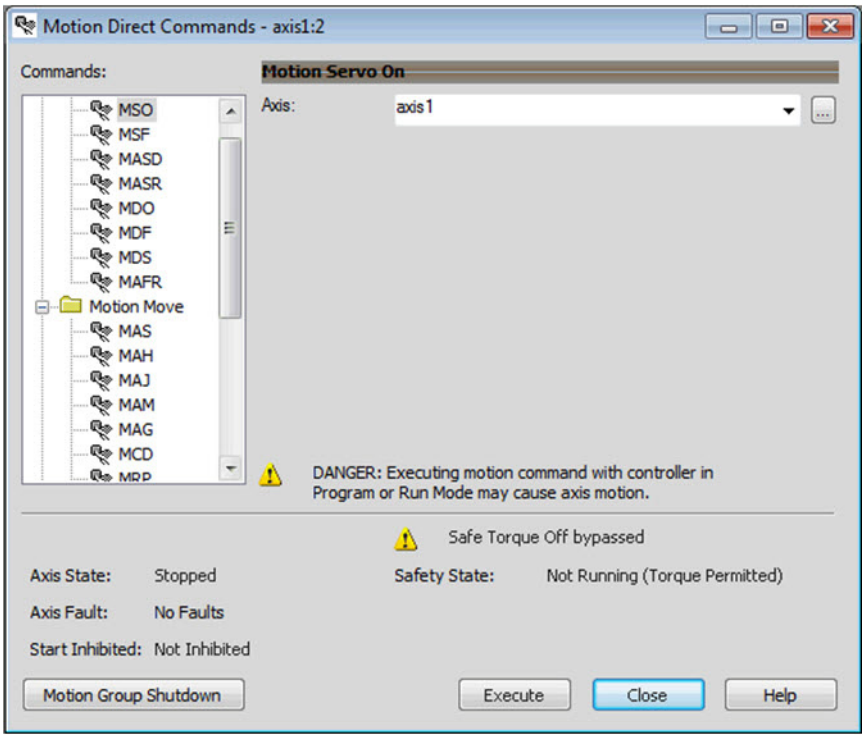

Figure 15 - Axis and Safe State Indications on the Motion Console Dialog Box

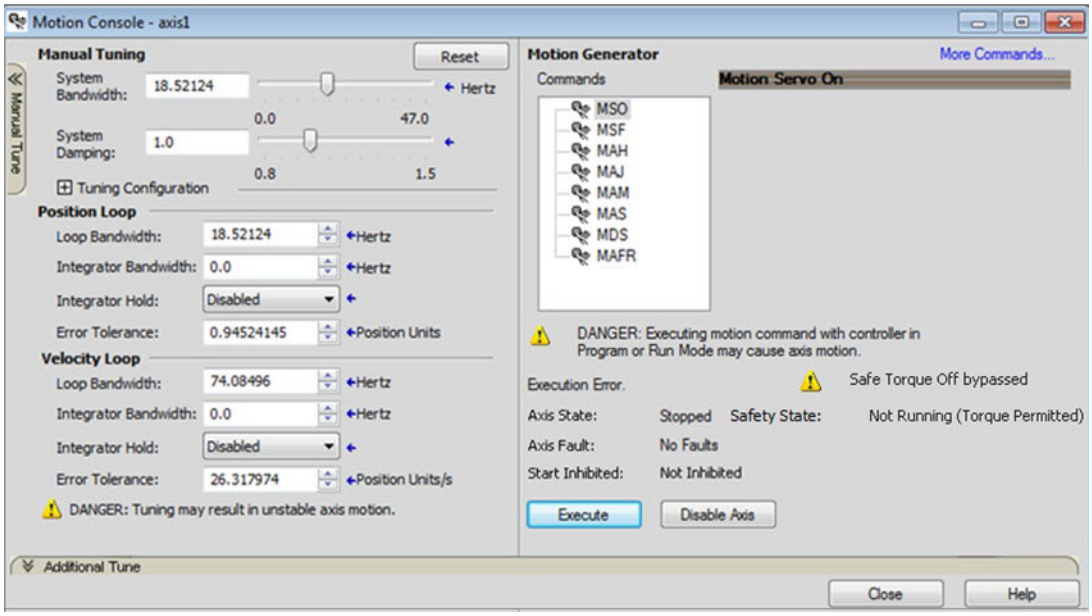

Functional Safety Considerations

ATTENTION: Before maintenance work can be performed in Program mode, the developer of the application must consider the implications of allowing motion through motion direct commands and should consider developing logic for runtime maintenance operations to meet the requirements of machine safety operating procedures.

ATTENTION: Motion is allowed and the STO function is not available when motion direct commands are used in Program mode.
Motion direct commands issued when the controller is in Program mode cause the drive to bypass the STO Active condition.
It is your responsibility to implement additional preventive measures to maintain safety integrity of the machinery during execution of motion direct commands in Program mode.

ATTENTION: To avoid personal injury and damage to equipment in the event of unauthorized access or unexpected motion during authorized access, return the controller to Run mode and remove the key before leaving the machine unattended.

Notes:

Hardwired STO Wiring and Operation

This chapter provides information for hardwired installation and operation of the Integrated Safety - Safe Torque Off option module.

Topic	Page
Wiring	75
Description of Hardwired Operation	77
Selection of Hardwired Operation	77
Configure the Drive with Hardwired Safety Connections	77
Timing Diagrams	78

Wiring

Observe these wiring guidelines when installing the safety option module:

- Use copper wire with an insulation rating of 600V or greater.
- Separate control wires from power wires by at least 0.3 m (1 ft).

Table 11 - Safety Option Module Terminal Block Specifications

Wire Size Range		Wire Type	Strip Length
Max	Min		
0.8 mm^2 (18 AWG)	0.3 mm^2 (28 AWG)	Multi-conductor shielded cable	10 mm (0.39 in.)

Integrated Safety - Safe Torque Off Option Module
(catalog number 20-750-S3)

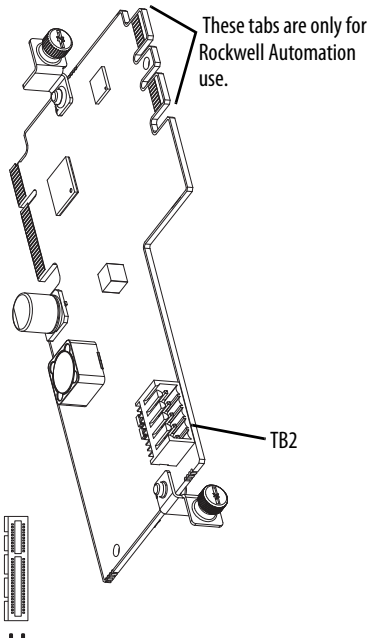

654

Table 12 - TB2 Terminal Designation

	Terminal	Name	Description
Si0 SC Si1 SC SP	Si0	Safety input 0	Safety input 0
	SC	Safety common	Safety power common
	Si1	Safety input 1	Safety input 1
	SC	Safety common	Safety power common
	SP	Safety power	+24V DC from customer-supplied SELV/PELV safety power

Safety Input	Connection Example
Power supply	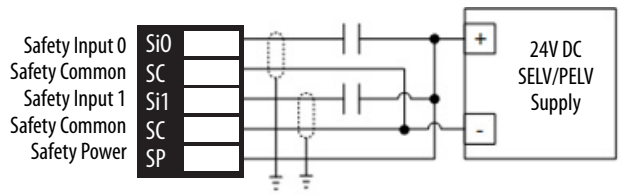

IMPORTANT The National Electrical Code and local electrical codes take precedence over the values and methods provided.

Cabling

- Safety input wiring must be protected against external damage by cable ducts, conduit, armored cable, or other means.
- Shielded cable is required. For proper shield termination, follow the installation requirements that are related to EN 61800-3 and the EMC Directive as described in these publications:
  - PowerFlex® 755 AC Drive Installation Instructions, publication 750-IN001
  - PowerFlex 750-Series Products with TotalFORCE™ Control Installation Instructions, publication 750-IN100

Power Supply Requirements

- The external power supply must conform to the Directive 2006/95/EC Low Voltage, by applying the requirements of EN61131-2 Programmable Controllers, Part 2 - Equipment Requirements and Tests, and one of the following:
  - EN60950 - SELV (Safety Extra Low Voltage)
  - EN60204 - PELV (Protective Extra Low Voltage)
  - IEC 60536 Safety Class III (SELV or PELV)
  - UL 508 Limited Voltage Circuit
  - 24V DC ±10% must be supplied by a power supply that complies with IEC 60204 and IEC 61558-1.

For more information, see the guidelines in Industrial Automation Wiring and Grounding Guidelines, publication 1770-4.1.

Description of Hardwired Operation

The Safe Torque Off feature provides a method, with sufficiently low probability of failure, to force the power-transistor control signals to a disabled state. If either hardwired safety input is de-energized, the drive output-power transistors are released from the On state. This release results in a condition where the drive coasts (stop category 0). Disabling the power transistor output does not provide mechanical isolation of the electrical output that is required for some applications.

Under normal operation, the Safe Torque Off inputs are energized. If either of the safety enable inputs are de-energized, then the output power transistors turn off. Parameter 933 [Start Inhibits] will indicate that IGBTs are inhibited and the HIM will indicate that the drive is not enabled. The Safe Torque Off response time is less than 15 ms maximum.



ATTENTION: If any of the safety enable inputs de-energize, the Start Inhibit field indicates SafeTorqueOffInhibit. The input must be de-energized within 1 second and re-energized within 1 second to avoid a fault condition.

See Figure 6 on page 64.

Selection of Hardwired Operation

To select hardwired control of Safe Torque Off:

- The safety control must be in the out-of-box state. See Restore the Drive to Out-of-Box State on page 26.
- An appropriate safety device must be connected to terminals S1, S2, and 01 (Digital Common).

Configure the Drive with Hardwired Safety Connections

To add the 20-750-S3 peripheral device, and configure the safety connection, see these sections:

- Add an Option Card to a PowerFlex 755 Drive in I/O Mode on page 34
- Add an Option Card to a PowerFlex 755T Drive Product in I/O Mode on page 37

Timing Diagrams

Figure 16 is a timing diagram for normal operation.

Figure 16 - System Operation When Inputs Are Meeting Timing Requirements

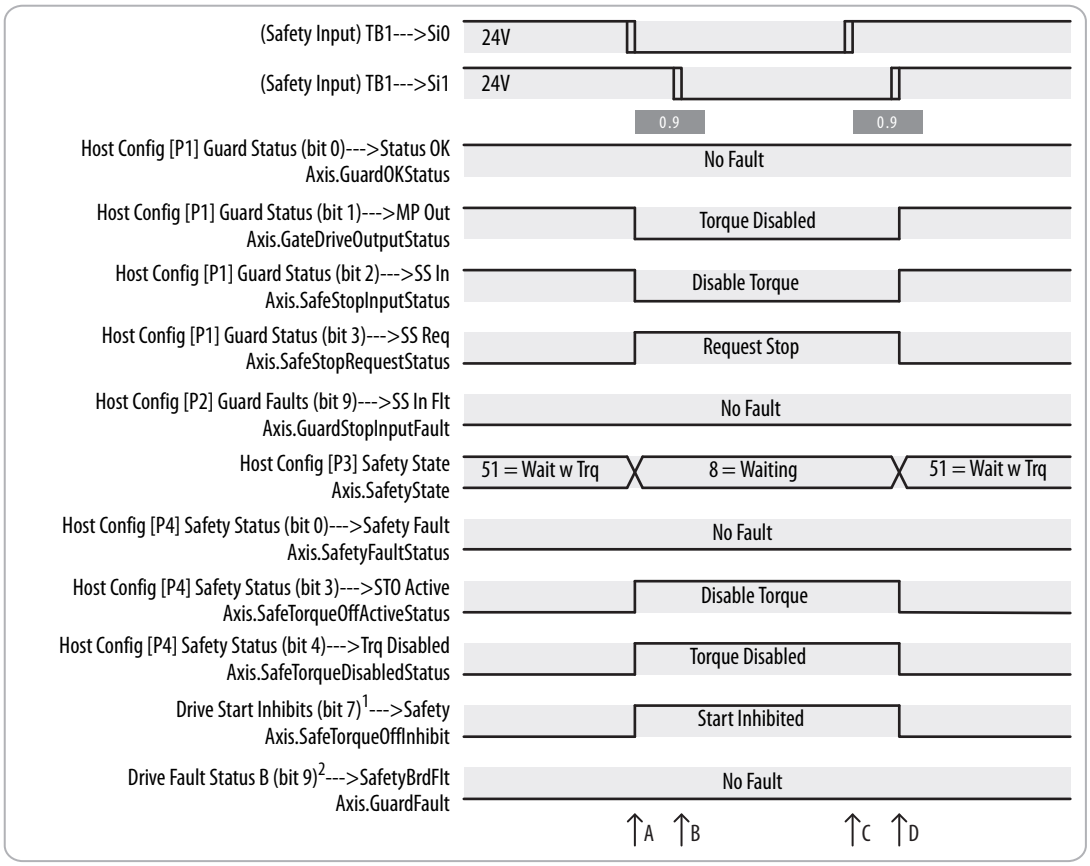

A. Set Safety Input Si0 = 0 volts
B. Set Safety Input Si1 = 0 volts within 0.9 seconds
C. Set Safety Input Si0 = 24 volts
D. Set Safety Input Si1 = 0 volts within 0.9 seconds

[1] Drive Start Inhibits is parameter 933 in PowerFlex 755 drives and parameter 603 in PowerFlex 755T drive products.

[2] Drive Fault Status B is parameter 953 in PowerFlex 755 drives and parameter 462 in PowerFlex 755T drive products.

Figure 17 demonstrates when a Safe Torque Off safety input mismatch is detected and a Fault is posted.

Figure 17 - System Operation in the Event That the Safety Enable Inputs Mismatch

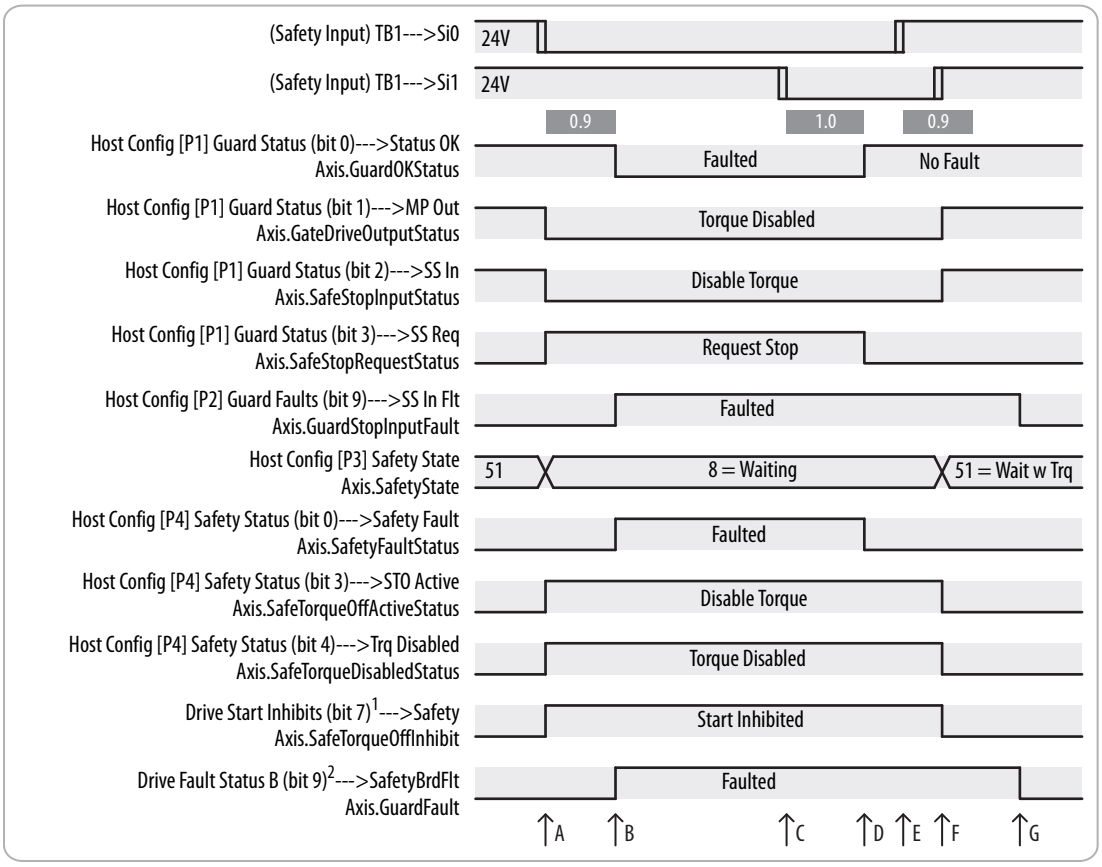

A. Set Safety Input Si0 = 0 volts
B. Discrepancy fault after 0.9 seconds
C. Set Safety Input Si1 = 0 volts
D. Discrepancy fault cleared after 1.0 second
E. Set Safety Input Si0 = 24 volts
F. Set Safety Input Si1 = 24 volts
G. PF 755 Clear Fault (I/O Mode)

[1] Drive Start Inhibits is parameter 933 in PowerFlex 755 drives and parameter 603 in PowerFlex 755T drive products.

[2] Drive Fault Status B is parameter 953 in PowerFlex 755 drives and parameter 462 in PowerFlex 755T drive products.

Both Safe Torque Off safety inputs must turn off together, otherwise a fault is asserted. Figure 18 shows the timing diagram when the safety inputs mismatch momentarily. A fault will be asserted even if the first safety input gets turned on again.

Figure 18 - System Operation in the Event That the Safety Enable Inputs Mismatch Momentarily

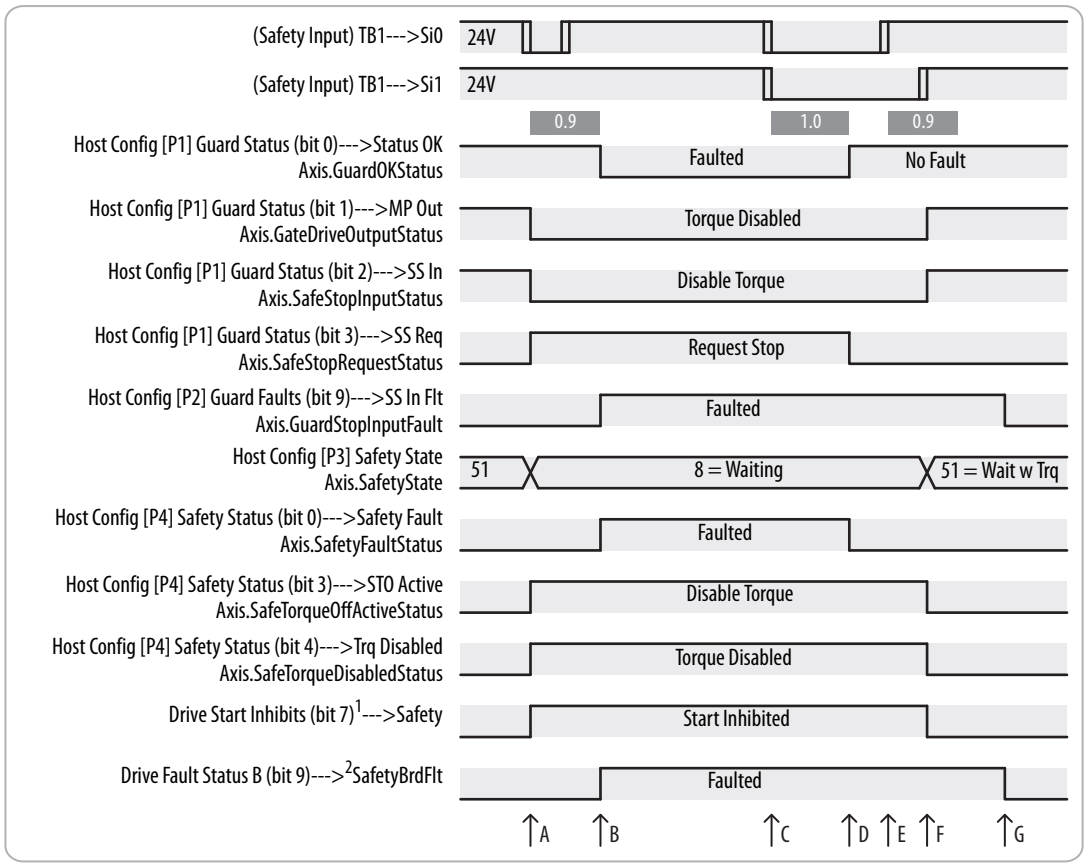

A. Set Safety Input Si0 = 0 volts for > 0.1 seconds
B. Discrepancy fault after 0.9 seconds
C. Set Safety Input Si1 = 0 volts
D. Discrepancy fault cleared after 1.0 second
E. Set Safety Input Si0 = 24 volts
F. Set Safety Input Si1 = 24 volts
G. PF 755 Clear Fault (I/O Mode)

[1] Drive Start Inhibits is parameter 933 in PowerFlex 755 drives and parameter 603 in PowerFlex 755T drive products.

[2] Drive Fault Status B is parameter 953 in PowerFlex 755 drives and parameter 462 in PowerFlex 755T drive products.

ATTENTION: The STO fault is detected upon demand of the STO function. After troubleshooting, a safety function must be executed to verify correct operation.

IMPORTANT The STO fault can be reset only if both inputs are in the Off state for more than 1 second. After the fault reset requirement is satisfied, a power cycle or soft reset can reset the fault conditions.

Monitoring and Troubleshooting

This chapter provides information for monitoring and troubleshooting the Integrated Safety - Safe Torque Off option module.

Topic	Page
Monitor STO Status	81
Monitor STO With a HIM or Software	83

Monitor STO Status

The option module has three status indicators to provide status of the module, safety network, and motion output of the drive. When viewing the installed option module, the status indicators are arranged in this order (top to bottom):

- Module status (DS1)
- Network status (DS2)
- Motion output status (DS3)

IMPORTANT Status indicators are not reliable for safety functions. Use status indicators only for general diagnostics during commissioning or troubleshooting. Do not attempt to use status indicators to determine operational status.

Module Status Indicator (DS1)

Table 13 provides information for the module status.

Table 13 - Module Status LED (DS1)

For Safety Supervisor State [1]	Status Indicator	Problem
No power	Off	No power is applied to drive.
Executing (4)	Green	Drive is operational. No faults or failures.
Idle state (2)	Flashing green	Standby (drive not configured).
Abort (5)	Flashing red	Major recoverable fault. The drive detected a recoverable fault.
Critical fault (6)	Red	The drive detected a non-recoverable fault.
Device self-test (1) Waiting (8) Configuring	Flashing red/ green	The drive performs self-test during power-up.
Firmware update in progress	Flashing red	Firmware update in progress.

(1) The numbers in parentheses are the values in the Host Config P[3] Safety State parameter.

Network Status Indicator (DS2)

Table 14 provides information for the network status.

Table 14 - Network Status LED (DS2)

State	Status Indicator	Problem
Not powered/not online	Off	Device is not online.
No connections	Flashing green	Device is online but has no connections in the established state.
Connected	Green	Device is online and connections in the established state.
Connection timeout	Flashing red	One or more I/O connections are in the Timed-Out state.
Critical link failure	Red	Failed communication device. The device has detected an error that has rendered it incapable of communicating on the network.
Self-test	Flashing red/ green	The device is performing its power-on test.
Firmware update in progress	Flashing red	Firmware update in progress.

Motion Output Status Indicator (DS3)

Table 15 provides information for the motion output status.

Table 15 - Motion Output Status LED (DS3)

State	Status Indicator	Problem
Torque disabled	Off	Torque is disabled.
Torque permitted	Solid green	The STO circuit is permitting torque.
Circuit fault	Flashing red	The STO circuit is faulted.

Monitor STO With a HIM or Software

This section describes safety-related status information available for viewing with a HIM, drive module properties in the Logix Designer application, or Connected Components Workbench™ software.

Fault Messages on HIM, Drive Module, and Connected Components Workbench Software

The only message displayed for any fault originating from the option card is 'SAFETY BRD FAULT' with a fault code of 211. This fault is displayed by the HIM, drive module, and Connected Components Workbench software. To determine the cause of the fault, read the value from STO Fault Type [P7] and see Table 16 to determine possible troubleshooting steps based on fault type.

Table 16 - STO Fault Messages

STO Fault Type(Value)	Problem	Possible Solutions
Circuit Err(3)	Internal STO diagnostics has found an issue with STO circuitry.	• Cycle power (or perform fault reset if in network mode). • Execute STO function • Return module for repair if fault persists.
Stuck Low(4)	Internal STO Health and/or Power input stuck low.	• Cycle power (or perform fault reset if in network mode). • Execute STO function • Return module for repair if fault persists.
Stuck High(5)	Internal STO Health and/or Power input stuck high.	• Cycle power(or perform fault reset if in network mode) • Execute STO function • Return module for repair if fault persists.
Discrepancy(102)	Difference detected between safety input values.	• Put both Safety inputs low for more than 1s to clear fault. • Check wiring of safety inputs if issue persists.
Mode Conflict(104)	Hardwired inputs are detected in network mode.	• Cycle Power (or perform fault reset). • Check to make sure there are no connections to the safety inputs.



ATTENTION: The status data that are described in this section is STANDARD data (not SAFETY data) and cannot be used as part of a safety function.

IMPORTANT Guard Status [P1] and Guard Faults [P2] only function in Hardwired mode (for backwards compatibility with previous hardwired safety modules).

For diagnostic purposes, you can also view status attributes by accessing these Host Config parameters (note: these are different than the 'Device Config' parameters) from a HIM, Connected Components Workbench software, or the Logix Designer application:

- Guard Status [P1]
- Guard Faults [P2]
- Safety State [P3]
- Safety Status [P4]
- Safety Faults [P5]

See Table 17 through Table 21 for a description of these parameters.

Table 17 - Guard Status [P1]

Bit	Display Text	Description
0	Status OK	This bit indicates when there are no faults. This bit is set to 1 when the Fault Status bits 1…31 are 0 (no faults). This bit is 0 if any Fault Status bit from 1…31 indicates a fault (1).
2	MP Out	This bit shows the status of the safety option module Motion Power command to the drive. 1 = indicates that Motion Power is enabled. 0 = indicates that Motion Power is disabled.
3	SS In	This bit displays the logical value evaluated for the dual-channel SS_In input. 0 = Off 1 = On
4	SS Req	This bit indicates the status of the safe stop request. 0 = Inactive 1 = Active

Table 18 - Guard Faults [P2]

Value	Display Text	Description
1	Critical Flt	A nonrecoverable microprocessor error has occurred.
3	MP Out Flt	An MP Output fault occurs if an error is detected in the Motion Power command to the drive. An MP Out fault is cleared at power down or by a successful reconfiguration.
9	SS In Flt	An error was detected in the safe stop input.

Table 19 - Safety State [P3]

Value	Display Text	Description	Mode
1	Testing	Device is performing test diagnostics	Networked/Hardwired
2	Idle	No active connections	Networked
3	Test Flt	A fault has occurred while executing test diagnostics	Networked/Hardwired
4	Executing	Normal running state	Networked
5	Abort	A major recoverable fault has occurred	Networked/Hardwired
6	Critical Flt	A critical fault has occurred	Networked/Hardwired
7	Configuring	Transition state.	Networked
8	Waiting	Out-of-box state	Hardwired
51	Wait w Trq	Out-of-box state	Hardwired
52	Exec w Trq	STO bypass state (Not currently supported. Reserved for future revision for CIP Motion™.)	Networked

Table 20 - Safety Status [P4]

Bit	Display Text	Description
0	Safety Fault	Indicates the existence of a safety fault 0 = no fault 1 = faulted
1	Safety Reset	A transition from 0 to 1 resets the safety function.
2	Restart Req	Indicates whether a manual restart is required following a stop function, 0 = restart not required 1 = restart required
3	STO Active	Indicates whether STO control is active. 0 = Not Active (Permit Torque) 1 = Active (Disable Torque)
4	Trq Disable	Displays the status of STO control 0 = Torque Permitted 1 = Torque Disabled
30	Conn Closed	No active connection of an output assembly from the safety controller exists.
31	Conn Idle	An active output assembly connection exists but the safety controller is in Program mode.

Table 21 - Safety Faults [P5]

Bit	Display Text	Description
1	Core Fault	Internal STO circuitry fault
3	STO Fault	This bit indicates the fault status of the STO function. 0 = no fault 1 = faulted The cause of the fault is recorded in the Device Config STO Fault Type [P7] status parameter.

IMPORTANT If the STO Fault bit is set, you can read the value of the Device Config STO Fault Type [P7] parameter to determine the type of fault.

A hardwired input discrepancy occurs when the values of the two hardwired inputs differ for greater than 1 second. To recover from this fault, de-energize both inputs for 1 second and issue a drive fault clear command to clear the latched fault in the drive.

A hardwired safety input that is detected while in network mode causes a fault. Only one mode, hardwired or safety, can be used. If network safety is used, no wiring should be present on the terminal block of 20-750-S3.

Safety Supervisor State

The Safety Supervisor State provides information on the state of the safety connection and the mode of operation. It can be read in the user's Logix program via the MSG instruction.

Table 22 - Safety Supervisor State: MSG

Parameter	Value	Description
Service Code	0x0E	Get Attribute Single
Class	0x39	Safety Supervisor
Instance	1	–
Attribute	0x0B	Device Status
Data Type	SINT	Unsigned Short Integer

For Safety State [P3] information, see Table 19 on page 84.

Safe Torque Off Faults

When a safety fault is indicated in the SI.SafetyFault tag, you can also use an MSG instruction to read the cause of the fault.

Table 23 - Safe Torque Off Fault Type: MSG

Parameter	Value	Description
Service Code	0x0E	Get Attribute Single
Class	0x5A	Safety Stop Functions
Instance	1	Axis number
Attribute	0x108	STO Fault Type
Data Type	SINT	Unsigned Short Integer

Specifications, Certifications, and CE Conformity

This appendix provides general specifications for the Integrated Safety - Safe Torque Off option module.

Topic	Page
Integrated Safety - Safe Torque Off Option Module Specifications	87
Environmental Specifications	88
Certifications	89

Integrated Safety - Safe Torque Off Option Module Specifications

These specifications apply to the Integrated Safety - Safe Torque Off option module. For additional specifications, see these publications:

- PowerFlex® 755 AC Drives Technical Data, publication 750-TD001
- PowerFlex 750-Series Products with TotalFORCE™ Control Technical Data, publication 750-TD100

Table 24 - General Specifications

Attribute	Value
Standards	EN 60204-1, IEC 61508, EN 61800-3, EN 61800-5-1, EN 61800-5-2, EN 62061, EN ISO 13489
Safety category	Cat. 3 and PLe per EN ISO 13849-1; SIL 3 per IEC 62508 and SIL CL3 per IEC 62061
Power supply (user I/O)	24V DC ±10%, 0.8…1.1 x rated voltage(2) PELV or SELV
Input type	Current sinking
Voltage, on-state input	11…30V, 3.5 mA DC
Voltage, off-state input, max	5V, 3.5 mA DC
Current, on-state input, min	3.3 mA
Current, off-state, max	1.3 mA
IEC 61131-2 (input type)	Type 3
Conductor type	Multi-conductor shielded cable
Conductor size (1)	0.3…0.8 mm^2 (28…18 AWG)
Strip length	10 mm (0.39 in.)
Recovery time (approximate time before drive can start after the torque enable request is made)	Hardwired STO mode: 200 ms Network STO mode: 100 ms

(1) See the Industrial Automation Wiring and Grounding Guidelines, publication 1770-4.1.

(2) Safety outputs need additional fuse for reverse voltage protection of the control circuit. Install a 6 A slow-blow or 10 A fast-acting fuse.

Environmental Specifications

The installation must comply with all environmental, pollution degree, and drive enclosure rating specifications required for the operating environment.

Table 25 - Environmental Pollution Degree Description (EN 61800-5-1)

Surrounding Environment Pollution Degree	Conductive Contamination Allowed by Pollution Degree	Acceptable Enclosures
Pollution degree 1 and 2	No possibility of conductive dust.	All enclosures are acceptable.
Pollution degree 3 and 4	The possibility of conductive dust is allowed.	Enclosure that meets or exceeds IP54, NEMA/UL Type 12 is required.

The drive storage temperature is -40...70 °C (-40...158 °F) and relative humidity is 5...95% noncondensing.

IMPORTANT Drive must not be installed in an area where the ambient atmosphere contains volatile or corrosive gas, vapors, or dust. If the drive is not going to be installed for a period of time, it must be stored in an area where it will not be exposed to a corrosive atmosphere.

IMPORTANT Products with a safety function installed must be protected against conductive contamination by one of the following methods:

- Select a product with an enclosure type of at least IP54, NEMA/UL Type 12
- Provide an environmentally controlled location for the product that does not contain conductive contamination

For detailed information on environmental, pollution degree, and drive enclosure rating specifications, see the technical data publication for your drive.

- PowerFlex 755 AC Drives Technical Data, publication 750-TD001
- PowerFlex 750-Series Products with TotalFORCE™ Control Technical Data, publication 750-TD100
- PowerFlex 755TM IP00 Open Type Kits Technical Data, publication 750-TD101

Certifications

Certification (1)	Value
c-UL-us (2)	UL Listed, certified for US and Canada
CE	European Union and 2014/30/EU EMC Directive, compliant with: EN 61800-3; PowerFlex 750-Series AC Drive, Emissions and Immunity EN 62061; Safety Function, Immunity European Union 2006/42/EC Machinery Directive: EN ISO 13849-1; Safety Function EN ISO 13849-2; Safety Function EN 60204-1; Safety Function EN 62061; Safety Function EN 61800-5-2; Safety Function
C-Tick	Australian Radiocommunications Act, compliant with: EN 61800-3; categories C2 and C3
TÜV	Certified by TÜV for Functional Safety: Up to SIL 3, according to EN 61800-5-2 and IEC 61508, and SIL CL3 according to EN IEC 62061; Up to Performance Level PLe and Category 3, according to EN ISO 13849-1; When used as described in this PowerFlex 755 Integrated Safety - Safe Torque Off User Manual, publication 750-UM004.

(1) See the Product Certification link at http://www.rockwellautomation.com/global/certification/overview.page for Declarations of Conformity, Certificates, and other certifications details.

(2) Underwriters Laboratories Inc. has not evaluated the Integrated Safety - Safe Torque Off, or Safe Speed Monitor option modules for functional safety.

Waste Electrical and Electronic Equipment (WEEE)



At the end of its life, this equipment should be collected separately from any unsorted municipal waste.

Notes:

STO Option Module Replacement Considerations

This appendix provides a comparison of the differences between the Safe Torque Off option module (catalog number 20-750-S) and the new Integrated Safety - Safe Torque Off option module (catalog number 20-750-S3).

Topic	Page
Installation Considerations	91
Wiring	92

Installation Considerations

This section provides information for differences between the Safe Torque Off option modules.

Option Module Slots

The Integrated Safety - Safe Torque Off option module (catalog number 20-750-S3) can be installed in slots 4, 5, or 6.

The Safe Torque Off option module (catalog number 20-750-S) can be installed in slots 4...8.

Wiring

The wiring and terminal blocks for the option modules are different.

Safe Torque Off Option Module

This section describes the terminal block and power supply for the Safe Torque Off option module.

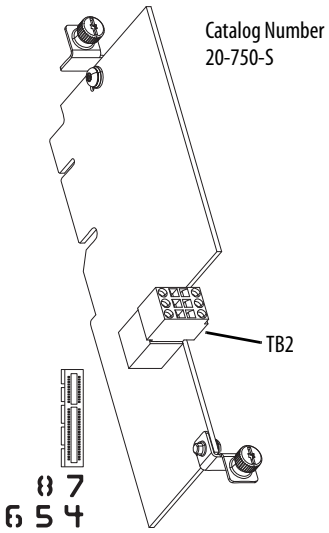

Table 26 - TB2 Terminal Designation

	Terminal	Name	Description
SP+ SP- SE+ SE- Sd Sd	SP+	+24 Volt Safety Power	User-supplied power: 24 volt ±10% 45 mA typical
	SP-	Safety Power Common	
	SE+	+24 Volt Safety Enable	User-supplied power: 24 volt ±10% 25 mA typical
	SE-	Safety Enable Common	
	Sd	Shield	Terminating point for wiring shields when an EMC plate or conduit box is not installed.
	Sd	Shield	

Safety Input	Connection Example
Power Supply	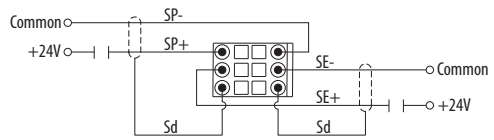

Integrated Safety - Safe Torque Off Option Module

This section describes the terminal block and power supply for the Integrated Safety - Safe Torque Off option module.

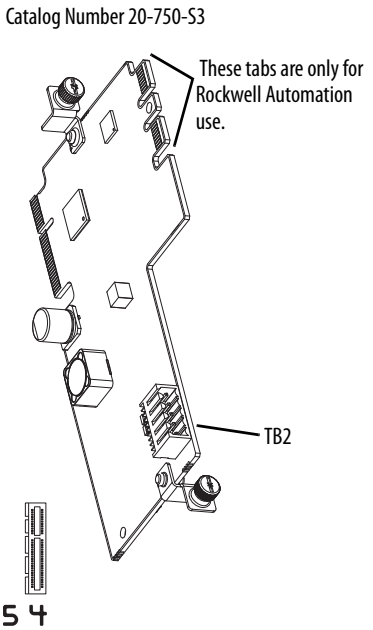

Table 27 - TB2 Terminal Designation

	Terminal	Name	Description
Si0 SC Si1 SC SP	Si0	Safety input 0	Safety input 0
	SC	Safety common	Safety power common
	Si1	Safety input 1	Safety input 1
	SC	Safety common	Safety power common
	SP	Safety power	+24V DC from customer-supplied SELV/PELV safety power

Safety Input	Connection Example
Power Supply	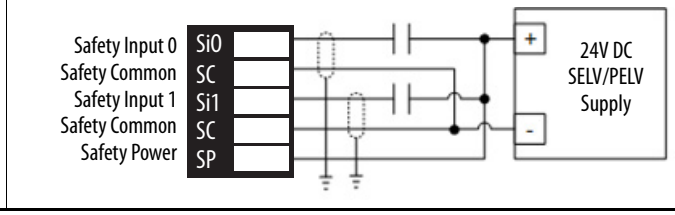

Parameter Data

This appendix provides a description of the device config parameters and host config parameters.

Parameters and Settings in a Linear List

This section lists the configurable parameters and their valid settings in numerical order.

Device Config Parameters

These parameters are part of the device configuration parameters.

Table 28 - Device Config Parameters

No.	Display Name Full Name Description	Values	Description	Data Type
1	**Identity Status** Describes the status of the module.	"Owned" (0)	Indicates whether the safety option module has an owner. 1 = owned 0 = not owned	DWORD
		"Configured" (2)	Indicated whether the safety option module has a configuration other than out-of-box. 1 = configured 0 = out of box configuration	
		"Min Rec Flt" (8)	If set (1), the safety option module has detected a minor recoverable fault. The device does not enter a faulted state.	
		"Min Unr Flt" (9)	If set (1), the safety option module has detected a minor unrecoverable fault. The device does not enter a faulted state.	
		"Maj Rec Flt" (10)	If set (1), the safety option module has detected a major recoverable fault and is in the major recoverable fault state.	
		"Maj Unr Flt" (11)	If set (1), the safety option module has detected a major unrecoverable fault is in the major unrecoverable fault state.	

Table 28 - Device Config Parameters (continued)

No.	Display Name Full Name Description	Values	Description	Data Type
2	**Extended Status** Detailed description of the module status based on Identity State.	"Self Test" (0)	A self test is in progress.	USINT
		"FW Update" (1)	A firmware update is in progress.	
		"IO Faulted" (2)	At least one I/O connection is faulted.	
		"No IO Conect" (3)	No I/O connections are established.	
		"Config Err" (4)	Non-volatile configuration is bad.	
		"Major Flt" (5)	A major fault has occurred.	
		"IO In Run" (6)	At least one I/O connection is in Run mode.	
		"IO In Idle" (7)	At least one I/O connection is in Idle mode.	
3	**Identity State** State of the module.	"Invalid" (0)	The device is without power.	USINT
		"Self Test" (1)	The device is executing self tests.	
		"Standby" (2)	The device has incorrect or incomplete configuration.	
		"Operational" (3)	The device is currently operating in normal fashion.	
		"Maj Rec Flt" (4)	The device has experienced a fault that is recoverable.	
		"Maj Unr Flt" (5)	Device has encountered a fault that is unrecoverable.	
4	**Max Data Age** Maximum data age	–	Holds the largest data age detected in 128 µs increments.	UINT
5	**Cons Flt Count** Consumer connection fault count	–	The number of faults detected in this hour from the consumer connection.	UINT
6	**Prod Flt Count** Producer connection fault count	–	The number of faults detected in this hour from the producer connection.	UINT
7	**STO Fault Code** Indicates the current STO fault type of the module.	"No Fault" (1)	STO functions are not faulted.	USINT
		"Circuit Err" (3)	Internal STO circuitry error.	
		"Stuck Low" (4)	Internal STO Health and/or Power input stuck low.	
		"Stuck High" (5)	Internal STO Health and/or Power input stuck high.	
		"Discrepancy" (102)	Hardwired input discrepancy.	
		"Mode Conflict" (104)	Hardwired input is detected in Network mode.	

Table 28 - Device Config Parameters (continued)

No.	Display Name Full Name Description	Values	Description	Data Type
8	**Safety In Values** Current value of the safety inputs.	"In0 Value" (0)	Safety Input 0 Value 0 = Off 1 = On	BYTE
		"In1 Value" (1)	Safety Input 1 Value 0 = Off 1 = On	
9	**Safety In Status** Current status of the safety inputs.	"In0 Status" (0)	Safety Input 0 Status 0 = Fault/Alarm has occurred 1 = OK	BYTE
		"In1 Status" (1)	Safety Input 1 Status 0 = Fault/Alarm has occurred 1 = OK	

Host Config Parameters

These parameters are part of the host configuration parameters.

Table 29 - Host Config Parameters

No.	Display Name Full Name Description	Values	Read-Write	Data Type
1	**Guard Status** Indicates the state of the safety functions while in Run mode.		RO	32-bit integer

Options	Reserved	Reserved	Reserved	Reserved	Reserved	Reserved	Reserved	Reserved	Reserved	Reserved	Reserved	Reserved	Reserved	Reserved	Reserved	Reserved	Reserved	Reserved	Reserved	Reserved	Reserved	Reserved	Reserved	Reserved	Reserved	Reserved	Reserved	Reserved	SS Req	SS In	MP Out	Reserved	StatusOK
Default	0	0	0	0	0	0	0	0	0	0	0	0	0	0	0	0	0	0	0	0	0	0	0	0	0	0	0	0	0	0	0	0	0
Bit	31	30	29	28	27	26	25	24	23	22	21	20	19	18	17	16	15	14	13	12	11	10	9	8	7	6	5	4	3	2	1	0	

Bit 0 "Status OK" – 0 = Fault; 1 = OK
Bit 2 "MP Out" – MP_Out_Value: 0 = Off; 1 = On
Bit 3 "SS In" – SS_In_Value: 0 = Off; 1 = On
Bit 4 "SS Req" – SS_Request_Status: 0 = Inactive; 1 = Active

2	**Guard Faults** Bit-encoded faults.		RO	32-bit integer

Options	Reserved	Reserved	Reserved	Reserved	Reserved	Reserved	Reserved	Reserved	Reserved	Reserved	Reserved	Reserved	Reserved	Reserved	Reserved	Reserved	Reserved	Reserved	Reserved	Reserved	Reserved	Reserved	Reserved	SS In Flt	Reserved	Reserved	Reserved	Reserved	Reserved	MP Out Flt	Reserved	Critical Flt	Reserved
Default	0	0	0	0	0	0	0	0	0	0	0	0	0	0	0	0	0	0	0	0	0	0	0	0	0	0	0	0	0	0	0	0	0
Bit	31	30	29	28	27	26	25	24	23	22	21	20	19	18	17	16	15	14	13	12	11	10	9	8	7	6	5	4	3	2	1	0	

Bit 1 "Critical Flt" – Critical Fault
Bit 3 "MP Out Flt" – MP Out Fault
Bit 9 "SS In Flt" – SS_In Fault

Table 29 - Host Config Parameters (continued)

<table>
<tr><th>No.</th><th>Display Name
Full Name
Description</th><th>Values</th><th>Read-Write</th><th>Data Type</th></tr>
<tr><td>3</td><td>Safety State
Provides information on the state of the safety connection and the mode of operation.
“Testing” (1) – The safety option module is in self-test
“Idle” (2) – No active connections (networked)
"Test Flt" (3) - Indicates a fault has occurred during testing of the safety module
“Executing” (4) – Normal running state (networked)
"Abort" (5) - Safety module is in a recoverable fault state
"Critical Flt" (6) - A critical fault has occurred
“Configuring” (7) – Transition state (networked)
“Waiting” (8) – Out-of-Box state (hardwired)
“Wait w Trq” (51) – Out-of-Box state (hardwired)
“Exec w Trq” (52) – STO Bypass state (networked)</td><td></td><td>RO</td><td>USINT</td></tr>
<tr><td>4</td><td>Safety Status
Indicates status of the safety functions.
<table><tr><td>Options</td><td>Conn Idle</td><td>Conn Closed</td><td>Reserved</td><td>Reserved</td><td>Reserved</td><td>Reserved</td><td>Reserved</td><td>Reserved</td><td>Reserved</td><td>Reserved</td><td>Reserved</td><td>Reserved</td><td>Reserved</td><td>Reserved</td><td>Reserved</td><td>Reserved</td><td>Reserved</td><td>Reserved</td><td>Reserved</td><td>Reserved</td><td>Reserved</td><td>Reserved</td><td>Reserved</td><td>Reserved</td><td>Reserved</td><td>Reserved</td><td>Reserved</td><td>Reserved</td><td>Reserved</td><td>Trq Disabled</td><td>STO Activ</td><td>Restart Req</td><td>Safety Reset</td><td>Safety Fault</td></tr><tr><td>Default</td><td>0</td><td>0</td><td>0</td><td>0</td><td>0</td><td>0</td><td>0</td><td>0</td><td>0</td><td>0</td><td>0</td><td>0</td><td>0</td><td>0</td><td>0</td><td>0</td><td>0</td><td>0</td><td>0</td><td>0</td><td>0</td><td>0</td><td>0</td><td>0</td><td>0</td><td>0</td><td>0</td><td>0</td><td>0</td><td>0</td><td>0</td><td>0</td><td>0</td></tr><tr><td>Bit</td><td>31</td><td>30</td><td>29</td><td>28</td><td>27</td><td>26</td><td>25</td><td>24</td><td>23</td><td>22</td><td>21</td><td>20</td><td>19</td><td>18</td><td>17</td><td>16</td><td>15</td><td>14</td><td>13</td><td>12</td><td>11</td><td>10</td><td>9</td><td>8</td><td>7</td><td>6</td><td>5</td><td>4</td><td>3</td><td>2</td><td>1</td><td>0</td></tr></table>
Bit 0 “Safety Fault” – Indicates the existence of a safety fault, where 0 = no fault and 1 = faulted.
Bit 1 “Safety Reset” – A transition from 0 to 1 resets the safety function.
Bit 2 “Restart Req” – Indicates whether a manual restart is required following a stop function, where 0 = restart not required and 1 = restart required.
Bit 3 “STO Active” – Indicates whether STO control is active, where 0 = Not Active (Permit Torque) and 1 = Active (Disable Torque).
Bit 4 “Trq Disabled” – Displays the status of STO control, where 0 = Torque Permitted and 1 = Torque Disabled.
Bit 30 “Conn Closed” – No active connection of an output assembly from the safety controller exists.
Bit 31 “Conn Idle” – An active output assembly connection exists but the safety controller is in Program mode.</td><td></td><td>RO</td><td>32-bit integer</td></tr>
<tr><td>5</td><td>Safety Faults
Indicates what type of safety fault has occurred.
“Core Fault” (1) – Safety Functions Fault
“STO Fault” (3) – This bit indicates the fault status of the STO function, where
0 = no fault
1 = faulted
The cause of the fault is recorded in the Device Config STO Fault Code [P7] status parameter.</td><td></td><td>RO</td><td>USINT</td></tr>
</table>

Numerics

20-750-S 12, 91
20-750-S1 12
20-750-S3 12, 91

A

additional resources 10
assembly
- connections
  - input 52
  - output 52
- tags
  - SI.ConnectionStatus tags 30
  - SI.Status tags 30
  - SO.Command tags 30

C

cable 76
category 0 stop 44, 61
category 1 stop 45, 62
coast to stop 18
compatible drives 12
configuration ownership 43, 48, 60
Configure Always feature 50
connection reaction time limit 42, 59
connection type
- description 32, 54
- setting 36, 38

controllers
- Compact GuardLogix 5370 13
- Compact GuardLogix 5380 13
- GuardLogix 5570 13
- GuardLogix 5580 13

D

diagnostics 84
documentation
- additional resources 10

drive replacement
- integrated safety 48, 65

DS1 81
DS2 81
DS3 81
duplicate device numbers 48

E

encoder wiring 92
environmental pollution degree 88
external power supply 76

F

failure analysis 18
falling edge signals 46, 62
fault
- code
  - 211 83
- condition
  - STO 47
- detection
  - spurious 18
- messages 83

firmware revisions 9
function response time 29
functional proof test 16

G

gate firing circuits 11

H

hazard prevention 15

I

IGBT 11
- failure 12, 25

input
- assembly connections 52
- assembly tag 47
- power
  - turn off before maintenance 12, 26

integrated STO mode
- drive replacement 48, 65
- operation 51
- STO bypass 68
- STO state reset 64

IP address 34, 56

J

jumper
- locations
  - Powerflex 755 drives 21
  - PowerFlex 755T drive products 22
- settings 19

L

LEDs
- module status 81
- motion output status 82
- network status 82

Logix Designer tag name 31, 53

M

maintenance
- turn input power off 12, 26

mapping
- safety tags 46, 63

mechanical brakes 15
mechanical force
back pressure 12
suspended loads 12
mission time 17
motion and safety connection 54
motion connection 54
motion direct commands
STO bypass 68
warning messages 69
MSG command 26

N

network delay multiplier 42, 59
new
module definition 33, 34, 56
peripheral device 34

O

Off state 12, 25, 80
On state 77
One Shot Falling instruction 46, 62
out-of-box state
restore 26
verify 26
output assembly connections 52

P

diagnostic parameters
guard status 84
guard faults 84
safety state 84
safety status 85
safety faults 85
parameters
device 93
host 95
PFD 16
PFD and PFH
PowerFlex 755 drives 17
PowerFlex 755T drive products 17
pollution degree 88
power supply
external 76
product compatibility and download center 9
proof test interval 16
proof testing 14

R

reaction times 18
release notes 9
replace
PowerFlex 755 drive
on an integrated safety network 48
safety devices 48
safety I/O device 49
requested packet interval 41, 58
risk assessment 14, 15, 19
RPI 41, 42, 52, 58, 59

S

safe torque off
fault type
MSG 86
response time 77
safe torque-off
integrated STO mode
STO bypass 68
STO state reset 64
troubleshooting 65
safeguarding devices 15
safety
analysis 19
category 87
control state 26
DeviceID 48
fault 86
function testing 19
network number 14, 48
network number, edit 57
performance level 14
rating 14, 18
reaction time 17, 18
reset 26
routines 46, 63
signature 14
supervisor state 86
MSG 86
supervisor status 26
system requirements 14
tab 37
tag mapping 46, 63
tags 30, 46, 52, 63
task 49
task signature 49
SAFETY BRD FAULT 83
safety only connection 32, 54
shielded cable 76
SI.ConnectionStatus tags 30, 52
SI.Status tags 30, 52
SIL 3 integrity safety data 30, 53
SNN 37, 39, 48, 57
SO.Command tags 30, 52
SO.SafeTorqueOff 52
spurious fault detection 18
standard
tags 46, 63
standard and safety connection 32
standard connection 32
standard data
in a safety routine 46, 63
in a safety tag 46, 63
start inhibits 25

status
attributes 84
indicators 81
LEDs
module status (DS1) 81
motion output status (DS3) 82
network status (DS2) 82
STO
fault
condition 47
reset 47
fault messages 83
Circuit Err(3) 83
Discrepancy(102) 83
Mode Conflict(104) 83
Stuck High(5) 83
Stuck Low(4) 83
fault type 83
function response time 29, 52
stop category
0 15, 25, 77
1 15
2 15
stored energy 12, 25
suspended loads 15
synchronize actions 46, 63
system
reaction times 18
safety considerations 14

T

timeout multiplier 42, 59
troubleshooting
safe torque-off
integrated STO mode 65
TÜV Rheinland 14

W

Wait w Trq 26
Waiting 26
wiring 19, 76
encoder 92
wiring guidelines 75

Notes:

Rockwell Automation Support

Use the following resources to access support information.

Technical Support Center	Knowledgebase Articles, How-to Videos, FAQs, Chat, User Forums, and Product Notification Updates.	https://rockwellautomation.custhelp.com/
Local Technical Support Phone Numbers	Locate the phone number for your country.	http://www.rockwellautomation.com/global/support/get-support-now.page
Direct Dial Codes	Find the Direct Dial Code for your product. Use the code to route your call directly to a technical support engineer.	http://www.rockwellautomation.com/global/support/direct-dial.page
Literature Library	Installation Instructions, Manuals, Brochures, and Technical Data.	http://www.rockwellautomation.com/global/literature-library/overview.page
Product Compatibility and Download Center (PCDC)	Get help determining how products interact, check features and capabilities, and find associated firmware.	http://www.rockwellautomation.com/global/support/pcdc.page

Documentation Feedback

Your comments will help us serve your documentation needs better. If you have any suggestions on how to improve this document, complete the How Are We Doing? form at http://literature.rockwellautomation.com/idc/groups/literature/documents/du/ra-du002_-en-e.pdf.

Rockwell Automation maintains current product environmental information on its website at http://www.rockwellautomation.com/rockwellautomation/about-us/sustainability-ethics/product-environmental-compliance.page.

Allen-Bradley, Connected Components Workbench, CompactLogix, ControlLogix, GuardLogix, PowerFlex, Rockwell Automation, Rockwell Software, Studio 5000 Logix Designer, and TotalFORCE are trademarks of Rockwell Automation, Inc.

CIP Motion, CIP Safety, and EtherNet/IP are trademarks of ODVA, Inc.

Trademarks not belonging to Rockwell Automation are property of their respective companies.

Rockwell Otomasyon Ticaret A.Ş., Kar Plaza İş Merkezi E Blok Kat:6 34752 İçerenköy, İstanbul, Tel: +90 (216) 5698400

www.rockwellautomation.com

Power, Control and Information Solutions Headquarters

Americas: Rockwell Automation, 1201 South Second Street, Milwaukee, WI 53204-2496 USA, Tel: (1) 414.382.2000, Fax: (1) 414.382.4444
Europe/Middle East/Africa: Rockwell Automation NV, Pegasus Park, De Kleetlaan 12a, 1831 Diegem, Belgium, Tel: (32) 2 663 0600, Fax: (32) 2 663 0640
Asia Pacific: Rockwell Automation, Level 14, Core F, Cyberport 3, 100 Cyberport Road, Hong Kong, Tel: (852) 2887 4788, Fax: (852) 2508 1846

Publication 750-UM004B-EN-P - October 2018
Supersedes Publication 750-UM004A-EN-P - February 2017

Copyright © 2018 Rockwell Automation, Inc. All rights reserved. Printed in the U.S.A.

Programming Manual

Original Instructions

Allen-Bradley

PowerFlex 750-Series AC Drives

Firmware Revisions 1.xxx. . . 14.xxx









Important User Information

Read this document and the documents listed in the additional resources section about installation, configuration, and operation of this equipment before you install, configure, operate, or maintain this product. Users are required to familiarize themselves with installation and wiring instructions in addition to requirements of all applicable codes, laws, and standards.

Activities including installation, adjustments, putting into service, use, assembly, disassembly, and maintenance are required to be carried out by suitably trained personnel in accordance with applicable code of practice.

If this equipment is used in a manner not specified by the manufacturer, the protection provided by the equipment may be impaired.

In no event will Rockwell Automation, Inc. be responsible or liable for indirect or consequential damages resulting from the use or application of this equipment.

The examples and diagrams in this manual are included solely for illustrative purposes. Because of the many variables and requirements associated with any particular installation, Rockwell Automation, Inc. cannot assume responsibility or liability for actual use based on the examples and diagrams.

No patent liability is assumed by Rockwell Automation, Inc. with respect to use of information, circuits, equipment, or software described in this manual.

Reproduction of the contents of this manual, in whole or in part, without written permission of Rockwell Automation, Inc., is prohibited

Throughout this manual, when necessary, we use notes to make you aware of safety considerations.

	**WARNING:** Identifies information about practices or circumstances that can cause an explosion in a hazardous environment, which may lead to personal injury or death, property damage, or economic loss.
	**ATTENTION:** Identifies information about practices or circumstances that can lead to personal injury or death, property damage, or economic loss. Attentions help you identify a hazard, avoid a hazard, and recognize the consequence.
IMPORTANT	Identifies information that is critical for successful application and understanding of the product.

Labels may also be on or inside the equipment to provide specific precautions.

	**SHOCK HAZARD:** Labels may be on or inside the equipment, for example, a drive or motor, to alert people that dangerous voltage may be present.
	**BURN HAZARD:** Labels may be on or inside the equipment, for example, a drive or motor, to alert people that surfaces may reach dangerous temperatures.
	**ARC FLASH HAZARD:** Labels may be on or inside the equipment, for example, a motor control center, to alert people to potential Arc Flash. Arc Flash will cause severe injury or death. Wear proper Personal Protective Equipment (PPE). Follow ALL Regulatory requirements for safe work practices and for Personal Protective Equipment (PPE).

Preface

Summary of Changes 9
Product Certification 11
Manual Conventions 11
General Precautions 12
Qualified Personnel 12
Personal Safety 12
Product Safety 13
Class 1 Light-emitting Diode Product 13
Additional Resources 14

Chapter 1

Startup

Start-Up Check List 17
Prepare For Initial Drive Startup 17
Start-Up Menu 19
Drive Status Indicators 20
Establishing A Connection With EtherNet/IP 21

Chapter 2

Parameter Organization

About Parameters 24
Parameter Access Level 25
How Drive Parameters are Organized 26
Basic Parameter View (Port 0) 26
Advanced Parameter View (Port 0) 28
Expert Parameter View (Port 0) 34
Inverter Common (Port 10) 42
Inverter *n* (Port 10) 42
Converter Common (Port 11) 43
Converter *n* (Port 11) 43
Precharge Common (Port 11) 44
Precharge *n* (Port 11) 44
Embedded EtherNet/IP (Port 13) 45
Embedded DeviceLogix (Port 14) 46
How Option Module Parameters are Organized 47
11-Series I/O Modules 47
22-Series I/O Modules 48
Single Incremental Encoder Module 49
Dual Incremental Encoder Module 49
Universal Feedback Module 50
Safe Speed Monitor Module 51

Chapter 3

Drive Port 0 Parameters

Drive (Port 0) Monitor File 54
Drive (Port 0) Motor Control File 56
Drive (Port 0) Feedback & I/O File 70
Drive (Port 0) Cfg File 86

Drive (Port 0) Protection File 102
Drive (Port 0) Speed Control File 117
Drive (Port 0) Torque Control File 132
Drive (Port 0) Position Control File 139
Drive (Port 0) Communication File 154
Drive (Port 0) Diagnostics File 161
Drive (Port 0) Applications File 180

Chapter 4

Port 10 and Port 11 Parameters

Inverter (Port 10) Common Parameters. 222
Inverter *n* (Port 10) Parameters. 224
Converter (Port 11) Common Parameters 227
Converter *n* (Port 11) Parameters 229
Precharge (Port 11) Common Parameters 232
Precharge *n* (Port 11) Parameters 234

Chapter 5

Embedded Feature and Option Module Parameters

Embedded EtherNet/IP
(Port 13) Parameters 240
Communication Configurations 246
20-COMM-* Network Adapter Compatibility 246
Typical Programmable Controller Configurations. 246
Logic Command/Status Words. 247
Embedded DeviceLogix (Port 14) Parameters. 249
11-Series I/O Module Parameters 252
22-Series I/O Module Parameters 262
Single Incremental Encoder Module Parameters 273
Dual Incremental Encoder Module Parameters 276
Universal Feedback Module Parameters 281
Safe Speed Monitor Module Parameters. 299

Chapter 6

Troubleshooting

Faults, Alarms, and Configurable Conditions. 311
Faults. 311
Alarms. 312
Configurable Conditions. 313
View Faults and Alarms 314
Drive Status Indicators 314
HIM Indication. 316
Fault Display Screen 316
Manually Clearing Faults 316
Power Layer Interface (PLI) Board 7-Segment Display 317
Setting Factory Defaults 318
System Resource Allocation 318
Hardware Service Manual. 319
Integrated Motion Applications 319

Fault and Alarm Display Codes. 319
Parameter Access Level 319
Drive Fault and Alarm Descriptions 320
Inverter (Port 10) Faults and Alarms (Frame 8 and Larger) 340
Converter (Port 11) Faults and Alarms (Frame 8 and Larger) 345
Precharge (Port 11) Faults and Alarms (Frame 8 and Larger). 350
N-1 and Re-Rate Functions 353
N-1 and Re-Rating with Integrated Motion on EtherNet/IP 353
Use the N-1 Feature 353
Use the Re-Rate Feature. 354
Use the Re-Rate Feature to Add or Replace a Drive Assembly 355
Embedded EtherNet/IP (Port 13) Events. 357
I/O Faults and Alarms. 359
Safe Torque Off Fault 359
ATEX Faults 360
Single Incremental Encoder Faults and Alarms. 360
Dual Incremental Encoder Faults and Alarms. 361
Universal Feedback Faults and Alarms 362
Port Verification 369
Common Symptoms and Corrective Actions 369
PowerFlex 755 Lifting/Torque Proving 372
External Brake Resistor 372
Technical Support Options 373
What You Need When You Call Tech Support 373
Technical Support Wizards 374

PowerFlex 753 Control Block Diagrams

Appendix A
Diagram Conventions and Definitions. 376

PowerFlex 755 Control Block Diagrams

Appendix B
Diagram Conventions and Definitions. 412

Application Notes

Appendix C
Voltage Tolerance. 455
PowerFlex 755 Lifting/Torque Proving 456
Tuning the Motor for Torque Prove Applications. 457
Crane Set up with Encoder Feedback 458
Set Up the Drive 459
Motor Tune Routines. 459
Static Tune 460
Rotate Tune 461
Inertia Tune 462
Torque Prove 464

Troubleshooting 466
Crane Setup - Encoderless 467
Set Up the Drive 468
Motor Tune Routines 468
Static Tune 469
Rotate Tune 470
Inertia Tune 471
Torque Prove 473
Troubleshooting 474
Pump Off Function 475
Overview 475
Setup 475
Gather Motor and Pump Data 476
Enter Motor Data 476
Run Motor Tune Routine 477
Enter Pump Data 478
Enter Desired Bus Regulation Data 478
Store Pump Cycle Torque 480
Initialize Pump Stroke Position 480
Initialize the Pump Off Feature 481
Fine-Tuning 482
Sleep Mode 482
Pump Off Control Outlines 483
Predictive Maintenance with Logix 488
Predictive Maintenance for Wall Mount Drives (Frames 1...7) 488
Predictive Maintenance for Floor Mount Drives (Frames 8...10) 489

Appendix D

Using DeviceLogix

Introduction 495
Parameters 497
Function Block Elements 497
Macro Blocks 497
Bit and Analog I/O Points 498
Bit Inputs 498
Bit Outputs 498
Analog Inputs 499
Analog Outputs 499
Tips 500
Data Types 500
PowerFlex 755 v1.xxx Firmware Datalinks and internal DeviceLogix scratchpad registers (P54...P81) 500
PowerFlex 753 (all) and PowerFlex 755 v2.xxx (and higher) Datalinks and internal DeviceLogix scratchpad registers (P82...P105) 501
Program Examples 502

Example 1: Selector Switch Operation 502
Example 2: Scale Block Operation 505
Example 3: Diverter Operation 507
Example 4: Wet Well Operation 508
Example 5: Utilizing the Real-Time Clock 511

Appendix E

Permanent Magnet Motors

Compatible Allen-Bradley Servo Motors 513

Appendix F

Integrated Motion on EtherNet/IP Application

Introduction 517
Feedback Configuration Options 519
Considerations for Using Position Feedback Devices on the PowerFlex 755 in the Integrated Motion on EtherNet/IP Context 519
Torque Prove and Brake Slip Detect 523
Encoder Feedback Operation 524
Settings 525
Encoderless Operation (Velocity or Frequency Sensorless Vector) 526
PowerFlex 755 Integrated Motion Using Firmware Revision 12.001 or Later 527
Add an I/O Module to a PowerFlex 755 Drive 527
Configure 20-bit or 24-bit Motor Feedback Device Resolution 528
Parameter / Instance Attribute Mapping 529
Motor Overload 533
Positive and Negative Overtravel Input 533
Pre-charge OK Input 533
Brake Output 533
Regeneration OK Input 534
Contactor Enable Output 534
Analog Input and Output 534
Digital Input and Output 534
Motor Thermostat Input 534
SSI Rotary Full Digital Feedback 535
24-bit Device Feedback Configuration 535
Enhanced Attributes 536
Drive Parameter / Enhanced Attribute Mapping 537
Inverter Parameter / Enhanced Attribute Mapping 540
Converter Parameter / Enhanced Attribute Mapping 541
Precharge Parameter / Enhanced Attribute Mapping 541
Encoder Parameter / Enhanced Attribute Mapping 541
I/O Parameters 542
Faults 543
Additional Resources 546

Index 547

The purpose of this manual is to provide you with the basic information required to install, start-up, and troubleshoot PowerFlex® 750-Series Adjustable Frequency AC Drives. This manual is intended for qualified personnel. You must be able to program and operate Adjustable Frequency AC Drive devices. In addition, you must have an understanding of the parameter settings and functions. The PowerFlex 750-Series AC Drives Quick Start, publication 750-QS001, is designed to provide only basic start-up information.

Summary of Changes

This manual contains new and updated information as indicated in the following table.

Topic	Page
Changed title of 20HIM-UM001 link to "PowerFlex 20-HIM-A6 and 20-HIM-C6S HIM (Human Interface Module) User Manual" which is the current name of the document. Was shown as "Enhanced PowerFlex 7-Class Human Interface Module (HIM) User Manual."	Various
Changed Step 5 to a step instead of a description.	18
Added Port 10 and Port 11 to opening sentence of Parameter Organization Chapter 2.	23
Added parameters 409 [Dec Inhibit Actn], 410 [Motor OL Actn], 435 [Shear Pin 1 Actn], 449 [Power Loss Actn], and 950 [Minor Flt Cfg] to the to the Protection folder in the Basic Parameter View (Port 0) table.	
Added parameters 409 [Dec Inhibit Actn], 410 [Motor OL Actn], 435 [Shear Pin 1 Actn], 438 [Shear Pin 2 Actn], 444 [OutPhaseLossActn], 449 [Power Loss Actn], 462 [InPhase LossActn], 466 [Ground Warn Actn], and 950 [Minor Flt Cfg], to the Flt/AlarmCfg section of the Protection folder in the Advanced Parameter View (Port 0) table and also in the Expert Parameter View (Port 0) table.	28, 34
Parameters 1629 and 1641 have been changed from [IPM Bus Prot] and [IPM Max Spd] to [PM Bus Prot] and [PM Vel Max], respectively. Names and descriptions have been updated throughout the manual.	34, 69
Added parameters 365 [FS Brk Lvl], 366 [FS Brk Time], 367 [FS ZSpd Thresh] to the Drive Configuration file in the Start Features Group in the Expert Parameter View (Port 0) table.	36
Added parameter 303 [Fdbk Filter Cfg].	55
Added note to parameter 35 [Motor Ctrl Mode] to mention that motor data for permanent magnet motors is found in the Motor Name Plate and Rating Specifications table in Appendix E: Permanent Magnet Motors.	57
Changed max values on parameters 1653 [IPM Tran PWM], 1654 [IPMTran PWM Hyst], 1655 [IPM Tran Mode], and 1656 [IPM TranMod Hyst].	60
Added parameter 1662 [IPM SpdEstKp Hi].	61
Updated parameter 80 [PM Cfg] to include definitions for bits 8 and 9.	64
Updated the description of behavior when drive is operating as a speed regulator in parameter 196 [DI Fwd End Limit].	76
Updated the description of behavior when drive is operating as a speed regulator in parameter 198 [DI Rev Dec Limit]	77
Updated description of parameters 226 [Dig Out Invert] and 227 [Dig Out Setpoint] to show RW instead of RO.	79
Added parameters 338 [AutoClrFlt Tries], 339 [AutoClrFlt Delay], 340 [AutoClrCntrDelay], and 343 [Rstrt Cntr Delay], to port 0.	92
Updated parameter 347 [Auto Retry Fault], added bit 1, AutClrAttExh (Auto clr flts) to allow enabling the Auto Clear Fault Exhausted fault action.	93
Added "Sweep 2" to parameter 356 [FlyingStart Mode]. This frequency sweep mode is used with motor frequencies above 120 Hz.	95
Changed Max value of parameter 461 to Based on Drive Voltage (230, 460, 600, and 690).	107

Topic	Page
Updated parameter 489 [HSFan TotalLife] and parameter 490 [HSFan ElpsdLife] to show that the default value can be based on the drive rating.	110
Updated parameter 491 [HSFan RemainLife] to show that the default value can be based on the drive rating.	111
Added parameters 1680 [DI EmergencyOVRD], 1681 [Emerg OVRD Mode], 1682 [Purge Frequency], 1683 [Emerg Prot Ovrd], and 1684 [EmergMode Status] to describe the parameters associated with the new Emergency Override feature.	115 and 116
Updated parameter 731 [Homing Control] with bit 8 to allow configuration of the homing function to return home based on a hard stop detection.	142
Added parameters 739 [Home Trq Thresh], 740 [Home Trq Time], 741 [Home Trq Level], 742 [Home Torq Offset], 743 [Home Return Spd], and 744 [Home Decel]	143
Added bit 15 “Emrg OvrRide” to parameter 935.	163
Updated parameter 936 [Condition Sts 1] to add bits 14 “AutoClr Act” and 15 “AutClrCntDwn.”	166
Updated descriptions of parameters 1068 [PID Ref AnlgHi], 1069 [PID Ref AnlgLo], 1070 [PID Setpoint], 1071 [PID Ref Mult], 1073 [PID Fdbk AnlgHi],1074 [PID Fdbk AnlgLo] so that they refer to percentage of referenced value rather than just motor base speed.	181
Updated parameter 1100 [Trq Prove Cfg] to add bit 10 “BrkSlpFltCfg.”	184
Updated max value on parameter 1110 [Brk Slip Count].	186
Updated parameter 1114 [Brake Test Torq] Min/Max values.	186
Updated parameter 1169 [TorqAlarm Config] to add bit 1, “Torq Lvl Low.”	190
Added parameter 1185 [TorqAlarm LoLvl] to set the level at which the Torque Low Alarm becomes active.	191
Updated parameter 1188 [Pump Off Setup] to add bit 4, “Dis Baseline” which can enable or disable baseline function.	192
Added parameter 1208 [DI Pump Baseline] to select the digital input source for the Pump Baseline Disable Function.	194
Updated table in Faults, Alarms, and Configurable Conditions section to describe new auto reset for auto clear feature.	311
Updated introductory section in Fault and Alarm Display Codes section to reference descriptions of Auto Reset, Auto Clear, and new Emergency Override columns.	320
Added Auto Clear and Emerg Prot OVRD columns to Drive Fault and Alarm Types, Descriptions, and Actions table.	320
Added more actions to event 12 “HW OverCurrent” and event 13 “Ground Fault” in the Drive Fault and Alarm Types, Descriptions, and Actions table.	320
Added event 30 “Relay0 Life” to Drive Fault and Alarm Types, Descriptions, and Actions table.	323
Added event 34 “AutClrFltExhaust” to the Drive Fault and Alarm Types, Descriptions, and Actions table.	323
Added events 66 “OW Torq Level” and 68 “OW Torq Level Lo” to Drive Fault and Alarm Types, Descriptions, and Actions table.	324
Updated the tables in event 157 “DigIn Cfg B” and event 158 “DigIn Cfgt C”, both contained in the Drive Fault and Alarm Types, Descriptions, and Actions table, to include rows and columns for Emerg OvrRide conditions.	328
Updated the table in 158 “DigIn Cfgt C”, in the Drive Fault and Alarm Types, Descriptions, and Actions table, to include footnote to Forward and Reverse parameters to show they are not compatible with paramater 308 if it is set to “bipolar.”	329
Added event 176 “Home Config” to Drive Fault and Alarm Types, Descriptions, and Actions table.	330
Added events 300 “Emer Ovr Act” and 301 “Emer Ovr Not Act” to Drive Fault and Alarm Types, Descriptions, and Actions table.	333
Updated Drive Fault and Alarm Cross Reference By Name table to include new fault events 34, 66, 68, 176, 300, and 301	337
Added Auto Clear column to Inverter Fault and Alarm Types, Descriptions, and Actions table.	340

Topic	Page
Added Auto Clear column to Converter Fault and Alarm Types, Descriptions, and Actions table.	345
Added Auto Clear column to I/O Fault and Alarm Types, Descriptions, and Actions table.	359
Added Connected Components Workbench™ programming option and universal feedback encoder (20-750-UFB-1) option to the Crane Set up with Encoder Feedback section of Appendix C.	458
Added Attention statement regarding the "adjust freq" portion of the bus regulator function in the Enter Desired Bus Regulation Data section of Appendix C.	478
Added timing options for Course Update Period in Appendix F: Integrated Motion on EtherNet/IP Application.	517
Added parameters 676 [Trq Ref A Stpt] and 681 [Trq Ref B Stpt] to the PowerFlex 755 Drive Parameter Numeric Order table in Appendix F: Integrated Motion on EtherNet/IP Application.	537
Added information for parameter 1100 [Trq Prove Cfg] Bits 3, 4, and 10 to the PowerFlex 755 Drive Parameter Numeric Order table in Appendix F: Integrated Motion on EtherNet/IP Application.	537
Updated Index with new parameters	547

Product Certification

Product Certifications and Declarations of Conformity are available on the Internet at:
http://www.rockwellautomation.com/global/certification/overview.page.

Manual Conventions

- In this manual we refer to PowerFlex 750-Series Adjustable Frequency AC Drives as: drive, PowerFlex 750, PowerFlex 750 drive, or PowerFlex 750 AC drive.
- Specific drives within the PowerFlex 750-Series can be referred to as:
  - PowerFlex 753, PowerFlex 753 drive, or PowerFlex 753 AC drive
  - PowerFlex 755, PowerFlex 755 drive, or PowerFlex 755 AC drive
- To help differentiate parameter names and LCD display text from other text, the following conventions are used.
  - Parameter names will appear in [brackets] after the parameter number.
    For example: parameter 308 [Direction Mode].
  - Display text appears in "quotes." For example: "Enabled."

General Precautions

Qualified Personnel

ATTENTION: Only qualified personnel familiar with adjustable frequency AC drives and associated machinery must plan or implement the installation, startup, and subsequent maintenance of the system. Failure to comply can result in personal injury and equipment damage.

Personal Safety

ATTENTION: To avoid an electric shock hazard, verify that the voltage on the bus capacitors has discharged before servicing.

Frames 1…7: Measure the DC bus voltage at the power terminal block by measuring between the +DC and -DC terminals or between the +DC and -DC test point sockets if equipped. Also measure between the +DC terminal or test point and the chassis, and between the -DC terminal or testpoint and the chassis. The voltage must be zero for all three measurements.

Frames 8…10: Measure the DC bus voltage at the DC+ and DC- TESTPOINT sockets on the front of the power module.

See the PowerFlex 750-Series AC Drives Installation Instructions, publication 750-IN001, for terminal and testpoint socket locations.

ATTENTION: Hazard of personal injury or equipment damage exists when using bipolar input sources. Noise and drift in sensitive input circuits can cause unpredictable changes in motor speed and direction. Use speed command parameters to help reduce input source sensitivity.

ATTENTION: Risk of injury or equipment damage exists. DPI™ or SCANport™ host products must not be directly connected together via 1202 cables. Unpredictable behavior can result if two or more devices are connected in this manner.

ATTENTION: The drive start/stop/enable control circuitry includes Solid-state components. An additional hardwired stop circuit can be required to remove the AC line to the drive if either of the following hazards exist:

- Accidental contact with moving machinery
- Unintentional flow of liquid, gas, or solids

An auxiliary braking method can be required.

ATTENTION: Hazard of personal injury or equipment damage due to unexpected machine operation exists if the drive is configured to issue a Start or Run command automatically. Do not use these functions without considering applicable local, national, and international codes, standards, regulations, or industry guidelines.

Product Safety



ATTENTION: An incorrectly applied or installed drive can result in component damage or a reduction in product life. Wiring or application errors such as under sizing the motor, incorrect or inadequate AC supply, or excessive surrounding air temperatures can result in malfunction of the system.

ATTENTION: This drive contains ESD (Electrostatic Discharge) sensitive parts and assemblies. Static control precautions are required when installing, testing, servicing or repairing this assembly. Component damage can result if ESD control procedures are not followed. If you are not familiar with static control procedures, reference Guarding Against Electrostatic Damage, publication 8000-4.5.2 or any other applicable ESD protection handbook.

ATTENTION: Configuring an analog input for 0...20 mA operation and driving it from a voltage source could cause component damage. Verify proper configuration before you apply input signals.

ATTENTION: A contactor or other device that routinely disconnects and reapplies the AC line to the drive to start and stop the motor can cause drive hardware damage. The drive is designed to use control input signals that start and stop the motor. If an input device is used, operation must not exceed 1 cycle per minute or drive damage can occur.

ATTENTION: Drive must not be installed in an area where the ambient atmosphere contains volatile or corrosive gas, vapors, or dust. If the drive is not going to be installed immediately, it must be stored in an area where it is not exposed to a corrosive atmosphere.

Class 1 Light-emitting Diode Product



ATTENTION: Hazard of permanent eye damage exists when using optical transmission equipment. This product emits intense light and invisible radiation. Do not look into module ports or fiber-optic cable connectors.

Additional Resources

The recommended documentation that is listed in this section is available online at http://www.rockwellautomation.com/literature.

The following publications provide general drive information.

Title	Publication
Wiring and Grounding Guidelines for Pulse Width Modulated (PWM) AC Drives	DRIVES-IN001
Safety Guidelines for the Application, Installation, and Maintenance of Solid State Control	SGI-1.1
Guarding Against Electrostatic Damage	8000-4.5.2

The following publications provide specific PowerFlex 750-Series information on drive installation, features, specifications, and service.

Title	Publication
PowerFlex 750-Series AC Drive Installation Instructions	750-IN001
PowerFlex 750-Series AC Drives Technical Data	750-TD001
PowerFlex 20-HIM-A6 and 20-HIM-C6S HIM (Human Interface Module) User Manual	20HIM-UM001
PowerFlex 750-Series Safe Torque Off User Manual	750-UM002
Safe Speed Monitor Option Module for PowerFlex 750-Series AC Drives Reference Manual	750-RM001
PowerFlex 755 Integrated Safety - Safe Torque Off Option Module User Manual	750-UM004
PowerFlex 755/755T Integrated Safety Functions Option Module User Manual	750-UM005
PowerFlex 750-Series AC Drives Hardware Service Manual (Frame 8 and Larger)	750-TG001
Dynamic Braking Resistor Calculator	PFLEX-AT001
DeviceLogix™ User Manual	RA-UM003

The following publications provide specific Network Communications information.

Title	Publication
PowerFlex 755 Drive Embedded EtherNet/IP Adapter	750COM-UM001
PowerFlex 750-Series Drive DeviceNet Option Module	750COM-UM002
PowerFlex 20-750-CNETC Coaxial ControlNet Option Module	750COM-UM003

The following publications provide necessary information when applying the Logix Processors.

Title	Publication
Logix5000™ Controllers Common Procedures	1756-PM001
Logix5000 Controllers General Instructions	1756-RM003
Logix5000 Controllers Process Control and Drives Instructions	1756-RM006

The following publications provide information that is useful when planning and installing communication networks.

Title	Publication
ControlNet Coax Tap Installation Instructions	1786-IN007
ControlNet Cable System Planning and Installation Manual	1786-6.2.1
ControlNet Fiber Media Planning and Installation Guide	CNET-IN001

To order paper copies of technical documentation, contact your local Allen-Bradley distributor or sales representative.

To find your local Allen-Bradley distributor, visit www.rockwellautomation.com/locations.

Notes:

Startup

This chapter provides the information that is required to start up the PowerFlex® 750-Series drive.

Topic	Page
Start-Up Check List	17
Start-Up Menu	19
Drive Status Indicators	20
Establishing A Connection With EtherNet/IP	21

Start-Up Check List

- This check list supports the Start-Up menu option.
- A Human Interface Module (HIM) is required to run the Start-Up routine.

  For detailed information on by using the HIM, refer to the PowerFlex 20-HIM-A6 and 20-HIM-C6S HIM (Human Interface Module) User Manual, publication 20HIM-UM001.
- The Start-Up routine can modify parameter values for Analog and Digital I/O.



ATTENTION: Power must be applied to the drive to perform the following start-up procedure. Some of the voltages present are at incoming line potential. To avoid electric shock hazard or damage to equipment, it is recommended that only qualified service personnel perform the following procedure. Thoroughly read and understand the procedure before beginning.

Prepare For Initial Drive Startup

❑ **1.** Confirm that drive has been installed according to the PowerFlex 750-Series AC Drives Installation Instructions, publication 750-IN001.

❑ **2.** Confirm that all inputs are connected to the correct terminals and are secure.

❑ **3.** Verify that AC line power at the disconnect device is within the rated value of the drive.

❑ **4.** Verify that control power voltage is correct.

❑ **5.** Connect a Human Interface Module (HIM) to DPI™ Port 1 or 2 for the remainder of this procedure.

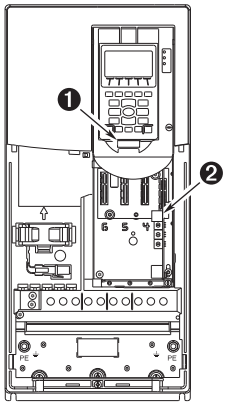

❑ **6.** Apply AC power and control voltages to the drive.

If any digital inputs are configured to Stop – CF, Run, or Enable, verify that signals are present or the drive does not start. See Chapter 6 for a list of potential digital input conflicts.

If the STS light-emitting diode is not flashing green, refer to Drive Status Indicators on page 20.

❑ **7.** When prompted, select a display language. The Start-Up Screen automatically displays for drives that have not been previously configured.

If the Start-Up screen is not displayed, press the Enter key.

❑ **8.** Press the Enter key to display the Start-Up Menu.

❑ **9.** Use the Up/Down Arrow keys to highlight "2. Basic."

❑ **10.** Press the Enter key. Follow the menu by using the Enter key, which steps you through the Start-Up routine.

The Start-Up routine asks simple questions and prompts you to input required information.

Start-Up Menu

The Human Interface Module (HIM) displays the General Start-Up menu by default upon initial power-up of the drive. To navigate to the Start-Up menu after the initial powerup of the drive, press the (Folders) key.

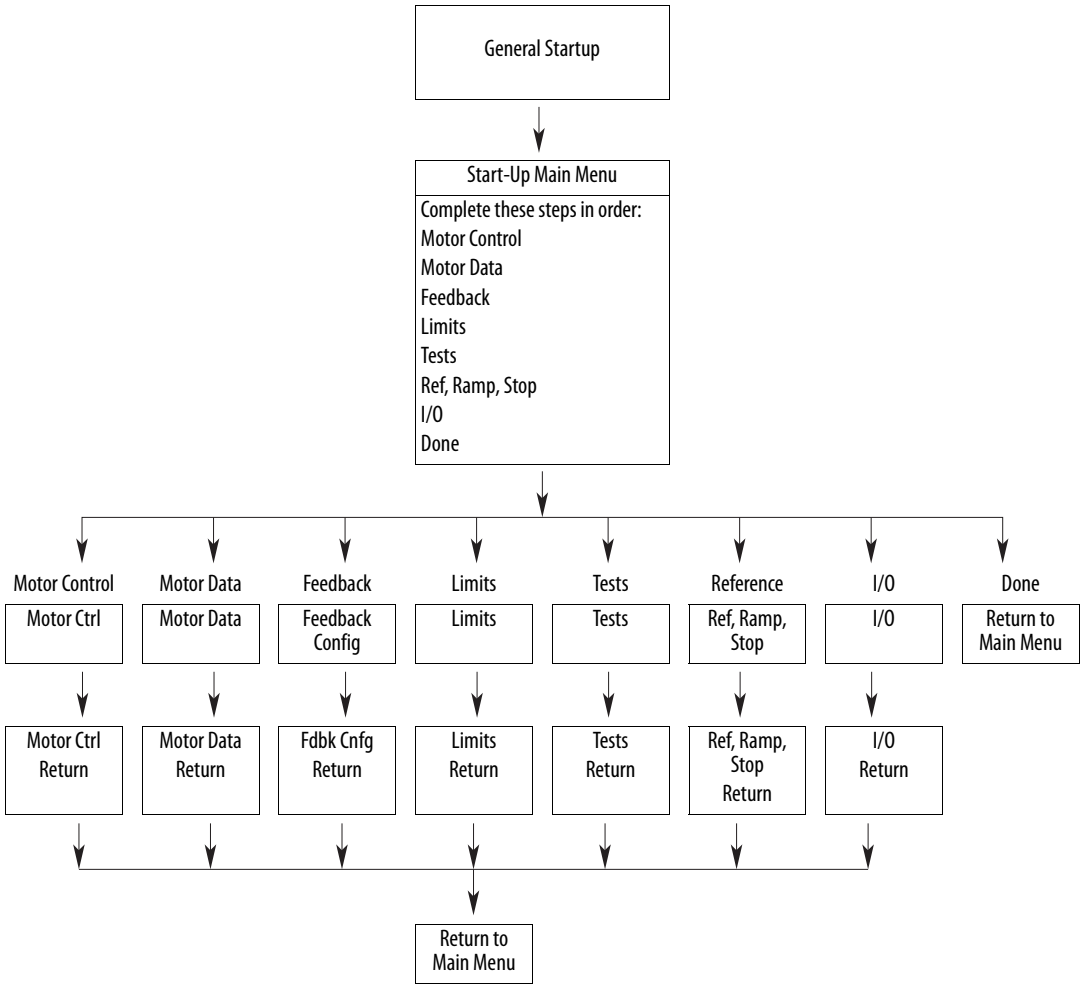

IMPORTANT If a start-up routine is initiated, but must be terminated before the routine is completed, be sure to press the Abort soft key to exit the routine.

Drive Status Indicators



Table 1 - PowerFlex 753 Status Indicator Descriptions

Name	Color	State	Description
STS (Status)	Green	Flashing	Drive ready but not running, and no faults are present.
		Steady	Drive running, no faults are present.
	Yellow	Flashing	Drive is not running, a start inhibit condition exists and the drive cannot be started. See parameter 933 [Start Inhibits].
		Steady	A type 1 (user configurable) alarm exists. A stopped drive cannot start until the alarm condition is cleared. A running drive continues to run but cannot restart until the alarm condition is cleared. See parameters 959 [Alarm Status A] and 960 [Alarm Status B].
	Red	Flashing	A major fault has occurred. The drive stops and cannot be started until the fault condition is cleared. See parameter 951 [Last Fault Code].
		Steady	A non-resettable fault has occurred.
	Red / Yellow	Flashing Alternately	A minor fault has occurred. When running, the drive continues to run. System is brought to a stop under system control. Fault must be cleared to continue. Use parameter 950 [Minor Flt Cfg] to enable. If not enabled, acts like a major fault.
	Yellow / Green	Flashing Alternately	When running, a type 1 alarm exists. See parameters 959 [Alarm Status A] and 960 [Alarm Status B].
	Green / Red	Flashing Alternately	Drive is flash updating.

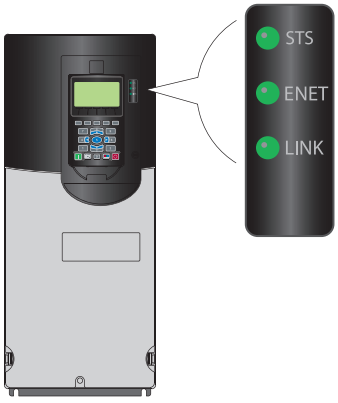

Table 2 - PowerFlex 755 Status Indicator Descriptions

Name	Color	State	Description
STS (Status)	Green	Flashing	Drive ready but not running, and no faults are present.
		Steady	Drive running, no faults are present.
	Yellow	Flashing	Drive is not running, a type 2 (non-configurable) alarm condition exists and the drive cannot be started. See parameter 961 [Type 2 Alarms].
		Steady	A type 1 (user configurable) alarm exists. A stopped drive cannot start until the alarm condition is cleared. A running drive continues to run but cannot restart until the alarm condition is cleared. See parameters 959 [Alarm Status A] and 960 [Alarm Status B].
	Red	Flashing	A major fault has occurred. The drive stops and cannot be started until fault condition is cleared. See parameter 951 [Last Fault Code].
		Steady	A non-resettable fault has occurred.
	Red / Yellow	Flashing Alternately	A minor fault has occurred. When running, the drive continues to run. System is brought to a stop under system control. Fault must be cleared to continue. Use parameter 950 [Minor Flt Cfg] to enable. If not enabled, acts like a major fault.
	Yellow / Green	Flashing Alternately	When running, a type 1 alarm exists. See parameters 959 [Alarm Status A] and 960 [Alarm Status B].
	Green / Red	Flashing Alternately	Drive is flash updating.
ENET	Unlit	Off	Embedded EtherNet/IP is not properly connected to the network or needs an IP Address.
	Red	Flashing	An EtherNet/IP connection has timed out.
		Steady	Adapter failed the duplicate IP Address detection test.
	Red / Green	Flashing Alternately	Adapter is performing a self-test.
	Green	Flashing	Adapter is properly connected but is not communicating with any devices on the network.
		Steady	Adapter is properly connected and communicating on the network.
LINK	Unlit	Off	Adapter is not powered or is not transmitting on the network.
	Green	Flashing	Adapter is properly connected and transmitting data packets on the network.
		Steady	Adapter is properly connected but is not transmitting on the network.

IMPORTANT	The Status Indicator light-emitting diodes on the HIM cradle do not indicate the status of an installed Communication Adapter option. If an optional Communication Adapter is installed, refer to the option module user manual for a description of light-emitting diode location and indication.

Establishing A Connection With EtherNet/IP

There are three methods for configuring the embedded EtherNet/IP adapter IP address:

- **Adapter Rotary Switches –** Use the switches when working on a simple, isolated network (for example, 192.168.1.xxx) that has other products with switches to set their IP addresses, does not need to be accessed from outside the network, and you prefer a simplified node addressing method. The three adapter switches are read when the drive powers up, and represent three decimal digits from top to bottom (see Figure 1). If set to a valid address (001...254), the adapter uses that value as the lower octet of its IP address (192.168.1.xxx, where xxx = rotary switch settings), along with a subnet mask of 255.255.255.0 and there a gateway is not configured. Also, the setting for adapter P36 [BOOTP] is automatically ignored.

  See Figure 1 and its accompanying table for all possible switch settings and their related descriptions.

IMPORTANT	When using the adapter rotary switches, set the IP address before power is applied because the adapter uses the IP address it detects when it first receives power.

- **BOOTP Server –** Use BOOTP if you prefer to control the IP addresses of the devices by using a server. The IP address, subnet mask, and gateway addresses are provided by the BOOTP server.
- **Adapter Parameters –** Use adapter parameters when you want more flexibility in IP address configuration, or must communicate outside the control network by using a gateway. Use the adapter parameters to configure the IP address, subnet mask, and gateway addresses.

IMPORTANT	Regardless of the method that is used to set the adapter IP address, each node on the EtherNet/IP network must have a unique IP address. To change an IP address, you must set the new value and then remove and reapply power to (or reset) the adapter.

Figure 1 - Setting the IP Address Switches

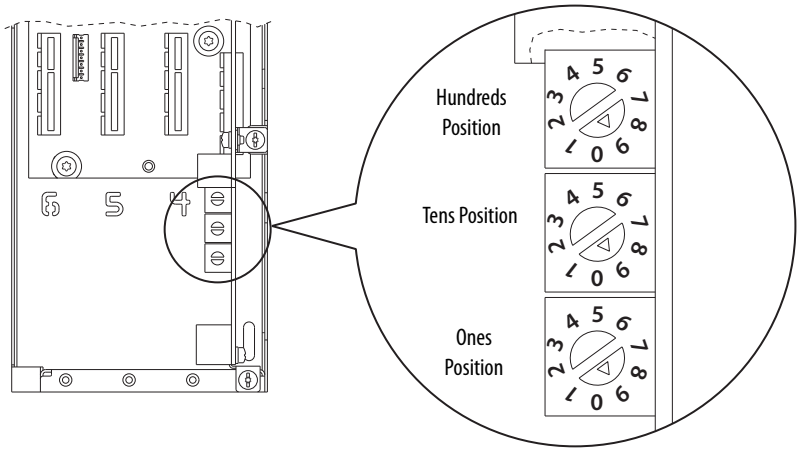

Possible Settings	Description
000	Adapter uses, depending on P36 [BOOTP], the BOOTP setting, or the adapter parameter settings for the IP address.
001…254	Adapter uses the rotary switch settings for the IP address (192.168.1.xxx, where xxx = rotary switch settings).
255…887	Adapter uses, depending on P36 [BOOTP], the BOOTP setting, or the adapter parameter settings for the IP address.
888	Resets the adapter IP address function to factory defaults. Thereafter, the drive must be powered down, the switches set to a setting other than 888, and then the drive must be powered up again to accept the new address.
889…998	Adapter uses, depending on P36 [BOOTP], the BOOTP setting, or the adapter parameter settings for the IP address.
999 (default settings)	Disables the rotary switches. Adapter uses, depending on P36 [BOOTP], the BOOTP setting, or the adapter parameter settings for the IP address.

Parameter Organization

This chapter lists and describes the organization of the PowerFlex® 750-Series Port 0, Port 10, and Port 11 drive parameters. The parameters can be programmed (viewed/edited) using a Human Interface Module (HIM). Refer to Enhanced PowerFlex 20-HIM-A6 and 20-HIM-C6S HIM (Human Interface Module)User Manual, publication 20HIM-UM001, for information on using the HIM to view and edit parameters. As an alternative, programming can also be performed using DriveTools™ software and a personal computer.

Topic	Page
About Parameters	24
Parameter Access Level	25
How Drive Parameters are Organized	26
How Option Module Parameters are Organized	47

About Parameters

To configure a drive module to operate in a specific way, certain drive parameters may have to be configured appropriately. Three types of parameters exist:

- **Numeric Parameters**
  These parameters have a single numeric value (such as 1750.0 RPM).
- **ENUM Parameters**
  These parameters allow a selection from 2 or more items. The LCD HIM displays a text message for each item.
- **Indirect Parameters**
  These parameters, represented by a maximum value of 159999 or 159999.15, are used to create assignments or to select either a data source or destination. The first two digits are used to select a port. The next four digits select a parameter number. If applicable, the two digits following the decimal point select a bit. For example, to assign an I/O option module in port 4 using a run contact on digital input 0, parameter 163 [DI Run] is set to 040001.00.
- **Bit Parameters**
  These parameters have individual bits associated with features or conditions. If the bit is 0, the feature is off or the condition is false. If the bit is 1, the feature is on or the condition is true.

Table 3 shows how each parameter type is presented in this manual.

Table 3 - Table Explanation

❶			❷	❸			
		No.	**Display Name** Full Name Description	**Values**		**Read-Write**	**Data Type**
MOTOR CONTROL	Motor Data	**28**	**Motor NP RPM** Motor Nameplate Revolutions Per Minute Rated RPM shown on the motor nameplate.	Units: Default: Min/Max:	RPM 1750.0 1.0 / 40000.0	RW	Real
	Vector Regulator	**107**	**Trq Adapt En** Torque Adaption Enable Enables or disables the adaptive torque calculation. This selection is active only in motor control mode flux vector induction (P35 [Motor Ctrl Mode] = 3 “Induction FV”).	Default: Options:	1 = “Enabled” 0 = “Disabled” 1 = “Enabled”	RW	32-bit Integer
FEEDBACK & I/O	Digin Functions	**164**	**DI Run Forward** Digital Input Run Forward Assigns a digital input used to run the drive (2 wire control) and command forward direction.	Default: Min/Max:	0.00 0.00 / 159999.15	RW	32-bit Integer
	Digital Inputs	**220**	**753 Digital In Sts** Digital Input Status Status of the digital inputs resident on the main control board (Port 0).			RO	16-bit Integer

Options	Reserved	Reserved	Reserved	Reserved	Reserved	Reserved	Reserved	Reserved	Reserved	Reserved	Reserved	Reserved	Reserved	Digital In 2	Digital In 1	Digital In 0
Default	0	0	0	0	0	0	0	0	0	0	0	0	0	0	0	0
Bit	15	14	13	12	11	10	9	8	7	6	5	4	3	2	1	0

0 = Condition False
1 = Condition True

No.	Name Description			Read-Write	Data Type
❶	File and Group organization				
	No. - Parameter Number				
	 Parameter value cannot be changed until the drive is stopped.				
	 Parameter cannot be set to DataLink In.				
❷	**Name** - Parameter name as it appears in the DriveExecutive™ software.				
	Description - Brief description of parameter function. The first line is the full text parameter name.				
	753 = Parameter or option is specific to PowerFlex 753 drives only. 755 = Parameter or option is specific to PowerFlex 755 drives only. 755 (8+) = Parameter or option is specific to PowerFlex 755 Frame 8 drives and larger only.				
❸	**Values** - Define the various operating characteristics of the parameter. *There are 3 types of Values.*				
	ENUM	Default:	Lists the value assigned at the factory.		
		Options:	Displays the selections available.		
	Bit	Default:	Lists the value assigned at the factory.		
		Options:	Displays the selections available.		
	Numeric	Default	Lists the value assigned at the factory.		
		Min/Max.	Displays lowest possible setting/Displays highest possible setting.		
	Indicates if parameter is read-write or read-only. **RW** = Read-Write **RO** = Read Only			RW RO	
	Indicates parameter data type (for example, integer, floating point, Boolean).				32-bit Integer

Parameter Access Level

Three parameter access level options are selectable by P301 [Access Level].

- Option 0 “Basic” is the most limited view that only displays commonly utilized parameters and options.
- Option 1 “Advanced” is an expanded view that may be required to access more advanced drive features.
- Option 2 “Expert” provides a comprehensive view of the drive’s entire parameter set.

How Drive Parameters are Organized

DriveExecutive programming software displays parameters in "Linear List" or "File Group Parameter" format. Viewing the parameters in "File Group Parameter" format simplifies programming by grouping parameters that are used for similar functions. There are eleven files. Each file is divided into multiple groups of parameters.

Drive (Port 0) parameter descriptions begin on page 53.

Basic Parameter View (Port 0)

Parameter 301 [Access Level] set to option 0 "Basic."

File	Group	Parameters							
Monitor 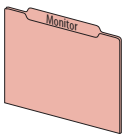	Metering	Output Frequency	1	Commanded Trq	4	Output Current	7	DC Bus Volts	11
		Commanded SpdRef	2	Torque Cur Fdbk	5	Output Voltage	8		
		Mtr Vel Fdbk	3	Flux Cur Fdbk	6	Output Power	9		
	Drive Data	Rated Volts	20	Rated Amps	21	Rated kW	22		
Motor Control 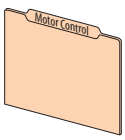	Motor Data	Motor NP Volts	25	Motor NP Hertz	27	Mtr NP Pwr Units	29	Motor Poles	31
		Motor NP Amps	26	Motor NP RPM	28	Motor NP Power	30		
	Mtr Ctrl Options	Motor Ctrl Mode	35	Maximum Freq	37	PWM Frequency	38	IPM Stc OfsTst K (1)	1660
		Maximum Voltage	36					(1) Frames 1…7 Only	
	Volts per Hertz	VHz Curve	65						
	Autotune	Autotune	70	IPM_Lg_50_pct	1631	IPM_Lg_100_pct	1633	IPM_Ld_0_pct	1635
		Autotune Torque	71	IPM_Lg_75_pct	1632	IPM_Lg_125_pct	1634	IPM_Ld_100_pct	1636
		IPM_Lg_25_pct	1630						
Feedback & I/O 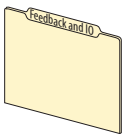	Digin Functions	Digital In Cfg	150	DI Start	161	DI Jog 1 Reverse	168	DI Speed Sel 2	175
		DI Enable	155	DI Fwd Reverse	162	DI Jog 2	169	DI HOA Start	176
		DI Clear Fault	156	DI Run	163	DI Jog 2 Forward	170	DI Accel 2	179
		DI Aux Fault	157	DI Run Forward	164	DI Jog 2 Reverse	171	DI Decel 2	180
		DI Stop	158	DI Run Reverse	165	DI Manual Ctrl	172		
		DI Cur Lmt Stop	159	DI Jog 1	166	DI Speed Sel 0	173		
		DI Coast Stop	160	DI Jog 1 Forward	167	DI Speed Sel 1	174		
	Control Board IO [755]	Digital In Sts	220						
	Digital Inputs [753]	Digital In Sts	220	Dig In Filt Mask	222	Dig In Filt	223		
	Digital Outputs [753]	Dig Out Sts	225	R00 Level Sel	231	T00 Sel	240	T00 Level CmpSts	243
		Dig Out Invert	226	R00 Level	232	T00 Level Sel	241		
		R00 Sel	230	R00 Level CmpSts	233	T00 Level	242		
	Motor PTC [753]	PTC Cfg	250	PTC Status	251				
	Analog Inputs [753]	Anlg In Type	255	Anlg In0 Value	260	Anlg In0 Hi	261	Anlg In0 Lo	262
	Analog Outputs [753]	Anlg Out Type	270	Anlg Out0 Data	277	Anlg Out0 DataLo	279	Anlg Out0 Lo	281
		Anlg Out0 Sel	275	Anlg Out0 DataHi	278	Anlg Out0 Hi	280	Anlg Out0 Val	282
Drive Cfg 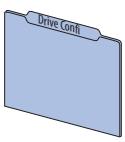	Preferences	Speed Units	300	Access Level	301	Language	302		
	Control Cfg	Voltage Class	305	Duty Rating	306	Direction Mode	308	SpdTrqPsn Mode A	309
	Auto Manual Ctrl	Logic Mask	324	Manual Cmd Mask	326	Alt Man Ref Sel	328	Alt Man Ref AnLo	330
		Auto Mask	325	Manual Ref Mask	327	Alt Man Ref AnHi	329	Manual Preload	331
	Braking Features	Stop Mode A	370	Bus Reg Mode B	373	DB Ext Watts	384	Dec Inhibit Actn	409
		Stop Mode B	371	DB Resistor Type	382	DB ExtPulseWatts	385		
		Bus Reg Mode A	372	DB Ext Ohms	383	Stop Dwell Time	392		

File	Group	Parameters							
Protection 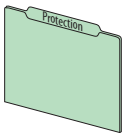	Motor Overload	Motor OL Actn	410	Mtr OL Alarm Lvl	412	Mtr OL Hertz	414	MtrOL Reset Time	416
		Mtr OL at Pwr Up	411	Mtr OL Factor	413	Mtr OL Reset Lvl	415		
	Load Limits	Current Lmt Sel	421	Shear Pin Cfg	434	Shear Pin1 Level	436		
		Current Limit 1	422	Shear Pin 1 Actn	435	Shear Pin 1 Time	437		
	Power Loss	Power Loss Actn	449	Pwr Loss Mode A	450				
	Flt/Alarm Cfg	Dec Inhibit Actn	409	Shear Pin 1 Actn	435	Power Loss Actn	449	Minor Flt Cfg	950
		Motor OL Actn	410						
Speed Control 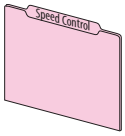	Speed Limits	Max Fwd Speed	520	Max Rev Speed	521	Min Fwd Speed	522	Min Rev Speed	523
	Speed Ramp Rates	Accel Time 1	535	Decel Time 1	537	Jog Acc Dec Time	539		
		Accel Time 2	536	Decel Time 2	538				
	Speed Reference	Spd Ref A Sel	545	Spd Ref B Stpt	551	MOP Init Select	566	Preset Speed 4	574
		Spd Ref A Stpt	546	Spd Ref B AnlgHi	552	MOP Init Stpt	567	Preset Speed 5	575
		Spd Ref A AnlgHi	547	Spd Ref B AnlgLo	553	Preset Speed 1	571	Preset Speed 6	576
		Spd Ref A AnlgLo	548	Jog Speed 1	556	Preset Speed 2	572	Preset Speed 7	577
		Spd Ref B Sel	550	Jog Speed 2	557	Preset Speed 3	573		
Torque Control 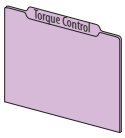	Torque Reference	Trq Ref A Sel	675	Trq Ref A AnlgLo	678	Trq Ref B Stpt	681	Trq Ref B Mult	684
		Trq Ref A Stpt	676	Trq Ref A Mult	679	Trq Ref B AnlgHi	682	Selected Trq Ref	685
		Trq Ref A AnlgHi	677	Trq Ref B Sel	680	Trq Ref B AnlgLo	683		
Communication 	Comm Control	Port 1 Reference	871						
	DPI Datalinks	Data In A1	895	Data In C1	899	Data Out A1	905	Data Out C1	909
		Data In A2	896	Data In C2	900	Data Out A2	906	Data Out C2	910
		Data In B1	897	Data In D1	901	Data Out B1	907	Data Out D1	911
		Data In B2	898	Data In D2	902	Data Out B2	908	Data Out D2	912
Diagnostics 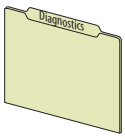	Status	Speed Ref Source	930	Last Stop Source	932	Last StrtInhibit	934	Drive Status 2	936
		Last StartSource	931	Start Inhibits	933	Drive Status 1	935	Condition Sts 1	937
	Fault/Alarm Info	Minor Flt Cfg	950	Last Fault Code	951	Fault Status A	952	Fault Status B	953

Advanced Parameter View (Port 0)

Parameter 301 [Access Level] set to option 1 "Advanced."

File	Group	Parameters							
Monitor 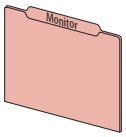	Metering	Output Frequency	1	Flux Cur Fdbk	6	DC Bus Volts	11	Elpsd Mtr MWHrs	16
		Commanded SpdRef	2	Output Current	7	DC Bus Memory	12	Elpsd Rgn MWHrs	17
		Mtr Vel Fdbk	3	Output Voltage	8	Elapsed MWH	13	Elpsd Mtr kWHrs	18
		Commanded Trq	4	Output Power	9	Elapsed kWH	14	Elpsd Rgn kWHrs	19
		Torque Cur Fdbk	5	Output Powr Fctr	10	Elapsed Run Time	15	Fdbk Filter Cfg	303
	Drive Data	Rated Volts	20	Rated Amps	21	Rated kW	22		
Motor Control 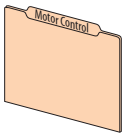	Motor Data	Motor NP Volts	25	Motor NP Hertz	27	Mtr NP Pwr Units	29	Motor Poles	31
		Motor NP Amps	26	Motor NP RPM	28	Motor NP Power	30		
	Mtr Ctrl Options	Motor Ctrl Mode	35	Maximum Freq	37	Mtr Options Cfg	40	Flux Up Time	44
		Maximum Voltage	36	PWM Frequency	38	Common Mode Type	41	IPM Stc OfsTst K (1)	1660
						Flux Up Enable	43	(1) Frames 1…7 Only	
	Volts per Hertz	Start Acc Boost	60	Break Voltage	62	VHz Curve	65		
		Run Boost	61	Break Frequency	63				
	Autotune	Autotune	70	Flux Current Ref	75	IPM_Lg_50_pct	1631	IPM_Ld_0_pct	1635
		Autotune Torque	71	Total Inertia	76	IPM_Lg_75_pct	1632	IPM_Ld_100_pct	1636
		IR Voltage Drop	73	Inertia Test Lmt	77	IPM_Lg_100_pct	1633		
		Ixo Voltage Drop	74	IPM_Lg_25_pct	1630	IPM_Lg_125_pct	1634		
Feedback & I/O 	Digin Functions	Digital In Cfg	150	DI Jog 1	166	DI MOP Dec	178	DI PID Hold	192
		DI Enable	155	DI Jog 1 Forward	167	DI Accel 2	179	DI PID Reset	193
		DI Clear Fault	156	DI Jog 1 Reverse	168	DI Decel 2	180	DI PID Invert	194
		DI Aux Fault	157	DI Jog 2	169	DI SpTqPs Sel 0	181	DI Torque StptA	195
		DI Stop	158	DI Jog 2 Forward	170	DI SpTqPs Sel 1	182	DI Fwd End Limit	196
		DI Cur Lmt Stop	159	DI Jog 2 Reverse	171	DI Stop Mode B	185	DI Fwd Dec Limit	197
		DI Coast Stop	160	DI Manual Ctrl	172	DI BusReg Mode B	186	DI Rev End Limit	198
		DI Start	161	DI Speed Sel 0	173	DI PwrLoss ModeB	187	DI Rev Dec Limit	199
		DI Fwd Reverse	162	DI Speed Sel 1	174	DI Pwr Loss	188	DI PHdwr OvrTrvl	200
		DI Run	163	DI Speed Sel 2	175	DI Precharge	189	DI NHdwr OvrTrvl	201
		DI Run Forward	164	DI HOA Start	176	DI Prchrg Seal	190		
		DI Run Reverse	165	DI MOP Inc	177	DI PID Enable	191		
	Control Board IO [755]	Digital In Sts	220						
	Digital Inputs [753]	Digital In Sts	220	Dig In Filt Mask	222	Dig In Filt	223		
	Digital Outputs [753]	Dig Out Sts	225	R00 Level Sel	231	R00 Off Time	235	T00 Level CmpSts	243
		Dig Out Invert	226	R00 Level	232	T00 Sel	240	T00 On Time	244
		Dig Out Setpoint	227	R00 Level CmpSts	233	T00 Level Sel	241	T00 Off Time	245
		R00 Sel	230	R00 On Time	234	T00 Level	242		
	Motor PTC [753]	PTC Cfg	250	PTC Status	251				
	Analog Inputs [753]	Anlg In Type	255	Anlg In0 Value	260	Anlg In0 LssActn	263	Anlg In0 Filt BW	266
		Anlg In Sqrt	256	Anlg In0 Hi	261	Anlg In0 Raw Val	264		
		Anlg In Loss Sts	257	Anlg In0 Lo	262	Anlg In0 Filt Gn	265		
	Analog Outputs [753]	Anlg Out Type	270	Anlg Out0 Stpt	276	Anlg Out0 DataLo	279	Anlg Out0 Val	282
		Anlg Out Abs	271	Anlg Out0 Data	277	Anlg Out0 Hi	280		
		Anlg Out0 Sel	275	Anlg Out0 DataHi	278	Anlg Out0 Lo	281		
	R0 Predict Main [753]	R0 PredMaint Sts	285	R00 Load Amps	287	R00 ElapsedLife	289	R00 LifeEvntLvl	291
		R00 Load Type	286	R00 TotalLife	288	R00 RemainLife	290	R00 LifeEvntActn	292

File	Group	Parameters							
Drive Cfg	Preferences	Speed Units	300	Access Level	301	Language	302		
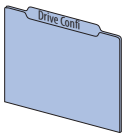	Control Cfg	Voltage Class	305	SpdTrqPsn Mode B	310	SLAT Err Stpt	314	Prchrg Err Cfg	323
		Duty Rating	306	SpdTrqPsn Mode C	311	SLAT Dwell Time	315		
		Direction Mode	308	SpdTrqPsn Mode D	312	Prchrg Control	321		
		SpdTrqPsn Mode A	309	Actv SpTqPs Mode	313	Prchrg Delay	322		
	Auto Manual Ctrl	Logic Mask	324	Manual Cmd Mask	326	Alt Man Ref Sel	328	Alt Man Ref AnLo	330
		Auto Mask	325	Manual Ref Mask	327	Alt Man Ref AnHi	329	Manual Preload	331
	Drive Memory	Reset Meters	336						
	Start Features	AutoClrFlt Tries	338	PowerUp Delay	346	Sleep Wake Mode	350	Wake Level	354
		AutoClrFlt Delay	339	Auto Retry Fault	347	SleepWake RefSel	351	Wake Time	355
		AutoClrCntrDelay	340	Auto Rstrt Tries	348	Sleep Level	352	FlyingStart Mode	356
		Rstrt Cntr Delay	343	Auto Rstrt Delay	349	Sleep Time	353	FS Brk Lvl	365
		Start At PowerUp	345						
	Braking Features	Stop Mode A	370	Bus Reg Level	375	Flux Braking En	388	DC Brake Time	395
		Stop Mode B	371	DB Resistor Type	382	Flux Braking Lmt	389	Brake Off Adj 1	402
		Bus Reg Mode A	372	DB Ext Ohms	383	Stop Dwell Time	392	Brake Off Adj 2	403
		Bus Reg Mode B	373	DB Ext Watts	384	DC Brake Lvl Sel	393	Dec Inhibit Actn	409
		Bus Reg Lvl Cfg	374	DB ExtPulseWatts	385	DC Brake Level	394		
Protection	Motor Overload	Motor OL Actn	410	Mtr OL Factor	413	Mtr OL Reset Lvl	415	Mtr OL Counts	418
		Mtr OL at Pwr Up	411	Mtr OL Hertz	414	MtrOL Reset Time	416	Mtr OL Trip Time	419
		Mtr OL Alarm Lvl	412						
	Load Limits	Drive OL Mode	420	Current Rate Lmt	425	Shear Pin1 Level	436	Load Loss Action	441
		Current Lmt Sel	421	Regen Power Lmt	426	Shear Pin 1 Time	437	Load Loss Level	442
		Current Limit 1	422	Motor Power Lmt	427	Shear Pin 2 Actn	438	Load Loss Time	443
		Current Limit 2	423	Shear Pin Cfg	434	Shear Pin2 Level	439	OutPhaseLossActn	444
		Active Cur Lmt	424	Shear Pin 1 Actn	435	Shear Pin 2 Time	440	Out PhaseLossLvl	445
	Power Loss	Power Loss Actn	449	Pwr Loss A Time	452	Pwr Loss B Time	455	InPhase LossActn	462
		Pwr Loss Mode A	450	Pwr Loss Mode B	453	UnderVltg Action	460	InPhase Loss Lvl	463
		Pwr Loss A Level	451	Pwr Loss B Level	454	UnderVltg Level	461	DC Bus Mem Reset	464
	Ground Fault	Ground Warn Actn	466	Ground Warn Lvl	467				
	Flt/Alarm Cfg	AutoClrFlt Tries	338	Auto Retry Fault	347	Motor OL Actn	410	Power Loss Actn	449
		AutoClrFlt Delay	339	Auto Rstrt Tries	348	Shear Pin 1 Actn	435	InPhase LossActn	462
		AutoClrCntrDelay	340	Auto Rstrt Delay	349	Shear Pin 2 Actn	438	Ground Warn Actn	466
		Rstrt Cntr Delay	343	Dec Inhibit Actn	409	OutPhaseLossActn	444	Minor Flt Cfg	950
	Predictive Main	PredMaint Sts	469	HSFan TotalLife	489	InFan EventLevel	499	MtrLubeEventActn	510
		PredMaintAmbTemp	470	HSFan ElpsdLife	490	InFan EventActn	500	MchBrngTotalLife	511
		PredMaint Rst En	471	HSFan RemainLife	491	InFan ResetLog	501	MchBrngElpsdLife	512
		PredMaint Reset	472	HSFan EventLevel	492	MtrBrngTotalLife	502	MchBrngRemainLif	513
		CbFan Derate [755 (8+)]	481	HSFan EventActn	493	MtrBrngElpsdLife	503	MchBrngEventLvl	514
		CbFan TotalLife [755 (8+)]	482	HSFan ResetLog [(1)]	494	MtrBrngRemainLif	504	MchBrngEventActn	515
		CbFan ElpsdLife [755 (8+)]	483	InFan Derate	495	MtrBrngEventLvl	505	MchBrngResetLog	516
		CbFan RemainLife [755 (8+)]	484	InFan TotalLife	496	MtrBrngEventActn	506	MchLubeElpsdHrs	517
		CbFan EventLevel [755 (8+)]	485	InFan ElpsdLife	497	MtrBrng ResetLog	507	MchLube EventLvl	518
		CbFan EventActn [755 (8+)]	486	InFan RemainLife	498	MtrLubeElpsdHrs	508	MchLubeEventActn	519
		HSFan Derate	488	[(1)] 755 Frames 1…7 only.		MtrLubeEventLvl	509		
	Emergency Override	DI EmergencyOVRD	1680	Purge Frequency	1682	EmergMode Status	1684		
		Emerg OVRD Mode	1681	Emerg Prot OVRD	1683				

File	Group	Parameters							
Speed Control 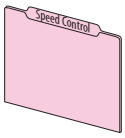	Speed Limits	Max Fwd Speed	520	Min Rev Speed	523	Skip Speed 1	526	Skip Speed Band	529
		Max Rev Speed	521	Overspeed Limit	524	Skip Speed 2	527		
		Min Fwd Speed	522	Zero Speed Limit	525	Skip Speed 3	528		
	Speed Ramp Rates	Accel Time 1	535	Decel Time 1	537	Jog Acc Dec Time	539	S-curve Decel	541
		Accel Time 2	536	Decel Time 2	538	S-curve Accel	540		
	Speed Reference	Spd Ref A Sel	545	Spd Ref B AnlgLo	553	MOP High Limit	561	Preset Speed 1	571
		Spd Ref A Stpt	546	Spd Ref B Mult	554	MOP Low Limit	562	Preset Speed 2	572
		Spd Ref A AnlgHi	547	Spd Ref Scale	555	MOP Init Select	566	Preset Speed 3	573
		Spd Ref A AnlgLo	548	Jog Speed 1	556	MOP Init Stpt	567	Preset Speed 4	574
		Spd Ref A Mult	549	Jog Speed 2	557	DI ManRef Sel	563	Preset Speed 5	575
		Spd Ref B Sel	550	MOP Reference	558	DI ManRef AnlgHi	564	Preset Speed 6	576
		Spd Ref B Stpt	551	Save MOP Ref	559	DI ManRef AnlgLo	565	Preset Speed 7	577
		Spd Ref B AnlgHi	552	MOP Rate	560				
	Speed Trim	Trim Ref A Sel	600	Trim Ref B Sel	604	TrmPct RefA Sel	608	TrmPct RefB Sel	612
		Trim Ref A Stpt	601	Trim Ref B Stpt	605	TrmPct RefA Stpt	609	TrmPct RefB Stpt	613
		Trim RefA AnlgHi	602	Trim RefB AnlgHi	606	TrmPct RefA AnHi	610	TrmPct RefB AnHi	614
		Trim RefA AnlgLo	603	Trim RefB AnlgLo	607	TrmPct RefA AnLo	611	TrmPct RefB AnLo	615
	Slip/Droop Comp	Droop RPM at FLA	620	Slip RPM at FLA	621	Slip Comp BW	622		
	Speed Regulator	Spd Options Ctrl	635	Speed Reg Kp	645	Spd Reg Int Out	654	VHzSV Spd Reg Kp	663
		Speed Reg BW	636	Speed Reg Max Kp	646	Spd Reg Pos Lmt	655	VHzSV Spd Reg Ki	664
		Filtered SpdFdbk	640	Speed Reg Ki	647	Spd Reg Neg Lmt	656		
		Speed Error	641	Spd Loop Damping	653	SReg Output	660		
	Speed Comp	Speed Comp Sel	665	Speed Comp Gain	666	Speed Comp Out	667		
Torque Control	Torque Limits	Pos Torque Limit	670	Neg Torque Limit	671				
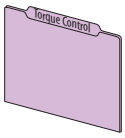	Torque Reference	Trq Ref A Sel	675	Trq Ref A Mult	679	Trq Ref B AnlgLo	683	Filtered Trq Ref	689
		Trq Ref A Stpt	676	Trq Ref B Sel	680	Trq Ref B Mult	684	Limited Trq Ref	690
		Trq Ref A AnlgHi	677	Trq Ref B Stpt	681	Selected Trq Ref	685		
		Trq Ref A AnlgLo	678	Trq Ref B AnlgHi	682	Torque Step	686		
	Inertia Comp [755]	Inertia CompMode	695	Inertia Dec Gain	697	Inertia Comp Out	699		
		Inertia Acc Gain	696	Inert Comp LPFBW	698	Ext Ramped Ref	700		
	Inertia Adaption [755]	InAdp LdObs Mode	704	InertiaAdaptGain	706	InertiaTrqAdd	708	InertAdptFltrBW	710
		Inertia Adapt BW	705	Load Estimate	707	IA LdObs Delay	709	Load Observer BW	711
	Friction Comp [755]	FrctnComp Mode	1560	FrctnComp Hyst	1562	FrctnComp Stick	1564	FrctnComp Rated	1566
		FrctnComp Trig	1561	FrctnComp Time	1563	FrctnComp Slip	1565	FrctnComp Out	1567

File	Group	Parameters							
Position Control 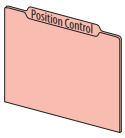	Position Cfg/Sts	PTP PsnRefStatus	720	Psn Selected Ref	722	Psn Reg Status	724	In Pos Psn Band	726
		Position Control	721	Psn Command	723	Zero Position	725	In Pos Psn Dwell	727
	Position Homing	Homing Status	730	DI OL Home Limit	734	User Home Psn	738	Home Trq Offset	742
		Homing Control	731	Find Home Speed	735	Home Trq Thresh	739	Home Return Spd	743
		DI Find Home	732	Find Home Ramp	736	Home Trq Time	740	Home Decel	744
		DI Redefine Psn	733	Actual Home Psn	737	Home Trq Level	741		
	Position Watch [755]	PsnWatch1 Select	745	PsnWatch1 Stpt	747	PsnWatch2 DtctIn	749		
		PsnWatch1 DtctIn	746	PsnWatch2 Select	748	PsnWatch2 Stpt	750		
	Interpolator [755]	Interp Control	755	Interp Vel Input	757	Interp Psn Out	759	Interp Trq Out	761
		Interp Psn Input	756	Interp Trq Input	758	Interp Vel Out	760		
	Direct	Psn Ref Select	765	Psn Direct Stpt	766	Psn Direct Ref	767		
	Point to Point	PTP Control	770	PTP Reference	776	PTP Decel Time	782	PTP Vel Override	788
		PTP Mode	771	PTP Feedback	777	PTP Speed FwdRef	783	PTP EGR Mult	789
		DI Indx Step	772	PTP Ref Scale	778	PTP Command	784	PTP EGR Div	790
		DI Indx StepRev	773	PTP Index Preset	779	PTP Fwd Vel Lmt	785		
		DI Indx StepPrst	774	PTP Setpoint	780	PTP Rev Vel Lmt	786		
		PTP Ref Sel	775	PTP Accel Time	781	PTP S-curve	787		
	Phase Lock Loop [755]	PLL Control	795	PLL Psn Stpt	800	PLL Rvls Input	805	PLL Enc Out Adv	810
		PLL Ext Spd Sel	796	PLL BW	801	PLL Psn Out Fltr	806	PLL EPR Output	811
		PLL Ext Spd Stpt	797	PLL LPFilter BW	802	PLL Speed Out	807	PLL Rvls Output	812
		PLL Ext SpdScale	798	PLL Virt Enc RPM	803	PLL Speed OutAdv	808		
		PLL Psn Ref Sel	799	PLL EPR Input	804	PLL Enc Out	809		
	Electronic Gear	Psn Ref EGR Out	815	Psn EGR Mult	816	Psn EGR Div	817		
	Position Offset	Psn Offset 1 Sel	820	Psn Offset 2 Sel	822	Psn Offset Vel	824		
		Psn Offset 1	821	Psn Offset 2	823				
	Ld Psn Fdbk Scal [755]	LdPsn Fdbk Mult	825	LdPsn Fdbk Div	826				
	Position Reg	Psn Error	835	Psn Reg Kp	839	PsnReg Spd Out	843	Psn Fdbk	847
		Psn Actual	836	PReg Pos Int Lmt	840	PReg Pos Spd Lmt	844	Psn Gear Ratio	848
		Psn Load Actual [755]	837	PReg Neg Int Lmt	841	PReg Neg Spd Lmt	845		
		Psn Reg Ki	838	PsnReg IntgrlOut	842	Psn Reg Droop	846		
Communication 	Comm Control	Port 1 Reference	871	Port 5 Reference	875	Drive Logic Rslt	879	Drive Ref Rslt	883
		Port 2 Reference	872	Port 6 Reference	876	DPI Ref Rslt	880	Drive Ramp Rslt	884
		Port 3 Reference	873	Port13 Reference [755]	877	DPI Ramp Rslt	881		
		Port 4 Reference	874	Port14 Reference	878	DPI Logic Rslt	882		
	Security	Port Mask Act	885	Logic Mask Act	886	Write Mask Act	887	Write Mask Cfg	888
	DPI Datalinks	Data In A1	895	Data In C1	899	Data Out A1	905	Data Out C1	909
		Data In A2	896	Data In C2	900	Data Out A2	906	Data Out C2	910
		Data In B1	897	Data In D1	901	Data Out B1	907	Data Out D1	911
		Data In B2	898	Data In D2	902	Data Out B2	908	Data Out D2	912
	Owners	Stop Owner	919	Jog Owner	921	Clear Flt Owner	923	Ref Select Owner	925
		Start Owner	920	Dir Owner	922	Manual Owner	924		
Diagnostics 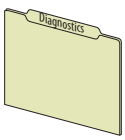	Status	Speed Ref Source	930	Last StrtInhibit	934	Drive OL Count	940	Drive Temp C	944
		Last StartSource	931	Drive Status 1	935	IGBT Temp Pct	941	At Limit Status	945
		Last Stop Source	932	Drive Status 2	936	IGBT Temp C	942	Safety Port Sts	946
		Start Inhibits	933	Condition Sts 1	937	Drive Temp Pct	943		
	Fault/Alarm Info	Minor Flt Cfg	950	Status1 at Fault	954	Fault Bus Volts	958	AlarmA at Fault	962
		Last Fault Code	951	Status2 at Fault	955	Alarm Status A	959	AlarmB at Fault	963
		Fault Status A	952	Fault Frequency	956	Alarm Status B	960		
		Fault Status B	953	Fault Amps	957	Type 2 Alarms	961		
	Peak Detection [755]	PkDtct Stpt Real	1035	PkDtct1PresetSel	1038	PeakDetect1 Out	1041	Peak2 Cfg	1044
		PkDtct Stpt DInt	1036	Peak1 Cfg	1039	PkDtct2 In Sel	1042	Peak 2 Change	1045
		PkDtct1 In Sel	1037	Peak 1 Change	1040	PkDtct2PresetSel	1043	PeakDetect2 Out	1046

File	Group	Parameters							
Applications 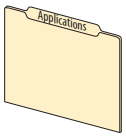	Process PID	PID Cfg	1065	PID Fdbk AnlgHi	1073	PID Upper Limit	1081	PID Status	1089
		PID Control	1066	PID Fdbk AnlgLo	1074	PID Lower Limit	1082	PID Ref Meter	1090
		PID Ref Sel	1067	PID FBLoss SpSel	1075	PID Deadband	1083	PID Fdbk Meter	1091
		PID Ref AnlgHi	1068	PID FBLoss TqSel	1076	PID LP Filter BW	1084	PID Error Meter	1092
		PID Ref AnlgLo	1069	PID Fdbk	1077	PID Preload	1085	PID Output Meter	1093
		PID Setpoint	1070	PID Fdbk Mult	1078	PID Prop Gain	1086		
		PID Ref Mult	1071	PID Output Sel	1079	PID Int Time	1087		
		PID Fdbk Sel	1072	PID Output Mult	1080	PID Deriv Time	1088		
	Torque Prove[755]	Trq Prove Cfg	1100	Trq Lmt SlewRate	1104	Brk Set Time	1108	MicroPsnScalePct	1112
		Trq Prove Setup	1101	Speed Dev Band	1105	Brk Alarm Travel	1109	ZeroSpdFloatTime	1113
		DI FloatMicroPsn	1102	SpdBand Intgrtr	1106	Brk Slip Count	1110	Brake Test Torq[755]	1114
		Trq Prove Status	1103	Brk Release Time	1107	Float Tolerance	1111		
	Fibers Function	Fiber Control	1120	Traverse Inc	1123	P Jump	1126		
		Fiber Status	1121	Traverse Dec	1124	DI Fiber SyncEna	1129		
		Sync Time	1122	Max Traverse	1125	DI Fiber TravDis	1130		
	Adjustable Vltg	Adj Vltg Config	1131	Adj Vltg Trim Lo	1138	Adj Vltg Preset3	1144	Adj Vltg Scurve	1150
		Adj Vltg Select	1133	Adj Vltg Command	1139	Adj Vltg Preset4	1145	Adj Vltg TrimPct	1151
		Adj Vltg Ref Hi	1134	Adj Vltg AccTime	1140	Adj Vltg Preset5	1146	Min Adj Voltage	1152
		Adj Vltg Ref Lo	1135	Adj Vltg DecTime	1141	Adj Vltg Preset6	1147	Dead Time Comp	1153
		Adj Vltg TrimSel	1136	Adj Vltg Preset1	1142	Adj Vltg Preset7	1148	DC Offset Ctrl	1154
		Adj Vltg Trim Hi	1137	Adj Vltg Preset2	1143	Adj Vltg RefMult	1149		
	Pump Jack	Rod Speed	1165	TorqAlarm Dwell	1170	Max Rod Speed	1175	PCP Pump Sheave	1180
		Rod Torque	1166	TorqAlarm Level	1171	Max Rod Torque	1176	Gearbox Limit	1181
		Rod Speed Cmd	1167	TorqAlm Timeout	1172	Min Rod Speed	1177	Gearbox Rating	1182
		TorqAlarm Action	1168	TorqAlarm TOActn	1173	Motor Sheave	1178	Gearbox Ratio	1183
		TorqAlarm Config	1169	Total Gear Ratio	1174	OilWell Pump Cfg	1179	Gearbox Sheave	1184
	Pump Off	Pump Off Config	1187	Set Top ofStroke	1193	Lift Torque	1199	Day Stroke Count	1205
		Pump Off Setup	1188	Torque Setpoint	1194	Pct Drop Torque	1200	DI PumpOff Disbl	1206
		Pump Off Action	1189	Pump Off Level	1195	Stroke Pos Count	1201	Pump OffSleepLvl	1207
		Pump Off Control	1190	Pump Off Speed	1196	Stroke Per Min	1202	DI Pump Baseline	1208
		Pump Off Status	1191	Pump Off Time	1197	Pump Off Count	1203		
		Pump Cycle Store	1192	Pct Cycle Torque	1198	PumpOff SleepCnt	1204		

File	Group	Parameters							
Applications 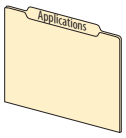	Profiling [755]	Profile Status	1210	DI StrtStep Sel0	1222	Step 1, 2, 3…16 Type	1230, 1240, 1250…1380		
		Units Traveled	1212	DI StrtStep Sel1	1223	Step 1, 2, 3…16 Velocity	1231, 1241, 1251…1381		
		Profile Command	1213	DI StrtStep Sel2	1224	Step 1, 2, 3…16 Accel	1232, 1242, 1252…1382		
		Counts Per Unit	1215	DI StrtStep Sel3	1225	Step 1, 2, 3…16 Decel	1233, 1243, 1253…1383		
		ProfVel Override	1216	DI StrtStep Sel4	1226	Step 1, 2, 3…16 Value	1234, 1244, 1254…1384		
		Prof DI Invert	1217			Step 1, 2, 3…16 Dwell	1235, 1245, 1255…1385		
		DI Hold Step	1218			Step 1, 2, 3…16 Batch	1236, 1246, 1256…1386		
		DI Abort Step	1219			Step 1, 2, 3…16 Next	1237, 1247, 1257…1387		
		DI Abort Profile	1220			Step 1, 2, 3…16 Action	1238, 1248, 1258…1388		
		DI Vel Override	1221			Step 1, 2, 3…16 Dig In	1239, 1249, 1259…1389		
	Camming [755]	PCAM Control	1390	PCAM Scale X	1397	PCAM Main Pt X 0, 1, 2…15	1407, 1409, 1411…1437		
		PCAM Mode	1391	PCAM Span Y	1398	PCAM Main Pt Y 0, 1, 2…15	1408, 1410, 1412…1438		
		PCAM Psn Select	1392	PCAM ScaleY Sel	1399	PCAM Aux EndPnt	1439		
		PCAM Psn Stpt	1393	PCAM ScaleYSetPt	1400	PCAM Aux Types	1440		
		PCAM Psn Ofst	1394	PCAM VelScaleSel	1401	PCAM Aux Pt X 1, 2, 3…15	1441, 1443, 1445…1469		
		PCAM PsnOfst Eps	1395	PCAM VelScaleSP	1402	PCAM Aux Pt Y 1, 2, 3…15	1442, 1444, 1446…1470		
		PCAM Span X	1396	PCAM Slope Begin	1403	PCAM Status	1471		
				PCAM Slope End	1404	PCAM Vel Out	1472		
				PCAM Main EndPnt	1405	PCAM Psn Out	1473		
				PCAM Main Types	1406	DI PCAM Start	1474		
	Roll Position [755]	Roll Psn Config	1500	Roll Psn Preset	1504	RP Rvls Output	1508	RP Unit Out	1512
		Roll Psn Status	1501	Roll Psn Offset	1505	RP Unwind	1509		
		RP Psn Fdbk Stpt	1502	RP EPR Input	1506	RP Unit Scale	1510		
		RP Psn Fdbk Sel	1503	RP Rvls Input	1507	RP Psn Output	1511		
	Torque Boost [755]	PsnTrqBst Ctrl	1515	PsnTrqBst UNWCnt	1519	PsnTrqBst Ps X4	1523	PsnTrqBst Trq Y4	1527
		PsnTrqBst Sts	1516	PsnTrqBst Ps X1	1520	PsnTrqBst Ps X5	1524	PsnTrqBst TrqOut	1528
		PsnTrqBst RefSel	1517	PsnTrqBst Ps X2	1521	PsnTrqBst Trq Y2	1525		
		PsnTrqBstPsnOfst	1518	PsnTrqBst Ps X3	1522	PsnTrqBst Trq Y3	1526		
	Variable Boost	VB Config	1535	VB Maximum	1540	VB Flux Thresh	1545	VB Cur Thresh	1550
		VB Status	1536	VB Accel Rate	1541	VB Flux Lag Freq	1546	VB Rate Lag Freq	1551
		VB Voltage	1537	VB Decel Rate	1542	VB Filt Flux Cur	1547		
		VB Time	1538	VB Frequency	1543	VB Current Rate	1548		
		VB Minimum	1539	VB Min Freq	1544	VB Current Hyst	1549		
	Spindle Orient [755]	SO Config	1580	SO EPR Input	1584	SO Unit Scale	1588	SO Decel Time	1592
		SO Status	1581	SO Rvls Input	1585	SO Position Out	1589	SO Fwd Vel Lmt	1593
		SO Setpoint	1582	SO Rvls Output	1586	SO Unit Out	1590	SO Rev Vel Lmt	1594
		SO Offset	1583	SO Cnts per Rvls	1587	SO Accel Time	1591		
	Id Compensation [755]	Id Comp Enbl	1600	Id Comp Mtrng 4	1607	IdCompRegen 1 Iq	1614	Id Comp Regen 5	1621
		Id Comp Mtrng 1	1601	IdCompMtrng 4 Iq	1608	Id Comp Regen 2	1615	IdCompRegen 5 Iq	1622
		IdCompMtrng 1 Iq	1602	Id Comp Mtrng 5	1609	IdCompRegen 2 Iq	1616	Id Comp Regen 6	1623
		Id Comp Mtrng 2	1603	IdCompMtrng 5 Iq	1610	Id Comp Regen 3	1617	IdCompRegen 6 Iq	1624
		IdCompMtrng 2 Iq	1604	Id Comp Mtrng 6	1611	IdCompRegen 3 Iq	1618		
		Id Comp Mtrng 3	1605	IdCompMtrng 6 Iq	1612	Id Comp Regen 4	1619		
		IdCompMtrng 3 Iq	1606	Id Comp Regen 1	1613	IdCompRegen 4 Iq	1620		

Expert Parameter View (Port 0)

Parameter 301 [Access Level] set to option 2 "Expert."

File	Group	Parameters							
Monitor 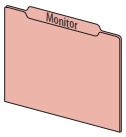	Metering	Output Frequency	1	Flux Cur Fdbk	6	DC Bus Volts	11	Elpsd Mtr MWHrs	16
		Commanded SpdRef	2	Output Current	7	DC Bus Memory	12	Elpsd Rgn MWHrs	17
		Mtr Vel Fdbk	3	Output Voltage	8	Elapsed MWH	13	Elpsd Mtr kWHrs	18
		Commanded Trq	4	Output Power	9	Elapsed kWH	14	Elpsd Rgn kWHrs	19
		Torque Cur Fdbk	5	Output Powr Fctr	10	Elapsed Run Time	15	Fdbk Filter Cfg	303
	Drive Data	Rated Volts	20	Rated Amps	21	Rated kW	22		
Motor Control 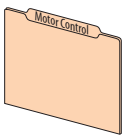	Motor Data	Motor NP Volts	25	Motor NP Hertz	27	Mtr NP Pwr Units	29	Motor Poles	31
		Motor NP Amps	26	Motor NP RPM	28	Motor NP Power	30		
	Mtr Ctrl Options	Motor Ctrl Mode	35	Flux Down Ki	45	IPM SpdEst Filt	1649	IPM Tran Filt Hi	1658
		Maximum Voltage	36	Flux Down Kp	46	IPM SpdEst Kp	1650	IPM Tran Angle	1659
		Maximum Freq	37	Econ At Ref Ki	47	IPM SpdEst Ki	1651	IPM Stc OfsTst K	1660
		PWM Frequency	38	Econ AccDec Ki	48	IPM SpdEst KiAdj	1652	IPM Lq Cmd BW	1661
		Mtr Options Cfg	40	Econ AccDec Kp	49	IPM Tran PWM	1653	IPM SpdEst Kp Hi	1662
		Common Mode Type	41	Stability Filter	50	IPMTran PWM Hyst	1654		
		Bus Utilization	42	Stab Volt Gain	51	IPM Tran Mode	1655	Parameters 1648…1662 used by drive frames 1…7 only.	
		Flux Up Enable	43	Stab Angle Gain	52	IPM TranMod Hyst	1656		
		Flux Up Time	44	IPM V FB HP Filt	1648	IPM Tran Filt Lo	1657		
	Volts per Hertz	Start Acc Boost	60	Break Voltage	62	SVC Boost Filter	64		
		Run Boost	61	Break Frequency	63	VHz Curve	65		
	Autotune	Autotune	70	Encdrlss VltComp	79	PM IR Voltage	87	IPM_Lg_50_pct	1631
		Autotune Torque	71	PM Cfg	80	PM IXq Voltage[755]	88	IPM_Lg_75_pct	1632
		IR Voltage Drop	73	PM PriEnc Offset	81	PM IXd Voltage[755]	89	IPM_Lg_100_pct	1633
		Ixo Voltage Drop	74	PM AltEnc Offset	82	PM Vqs Reg Kp	91	IPM_Lg_125_pct	1634
		Flux Current Ref	75	PM OfstTst Cur	83	PM Vqs Reg Ki	92	IPM_Ld_0_pct	1635
		Total Inertia	76	PM OfstTst CRamp	84	PM Dir Test Cur	93	IPM_Ld_100_pct	1636
		Inertia Test Lmt	77	PM OfstTst FRamp	85	PM IXqVoltage125	120	IPM PriOffstComp	1646
		Encdrlss AngComp	78	PM CEMF Voltage	86	IPM_Lg_25_pct	1630	IPM AltOffstComp	1647
	Vector Regulator	VCL Cur Reg BW	95	Flux Reg Enable	103	Trq Comp Regen	111	IPMVqFFwdLdIdWe[755]	1638
		VCL Cur Reg Kp	96	Flux Reg Ki	104	Slip Adapt Iqs	112	IPMVdFFwdLqIqWe[755]	1639
		VCL Cur Reg Ki	97	Flux Reg Kp	105	SFAdapt SlewLmt	113	IPM Max Cur[755]	1640
		VEncdls FReg Kp	98	Trq Adapt Speed	106	SFAdapt SlewRate	114	PM Vel Max[755]	1641
		VEncdls FReg Ki	99	Trq Adapt En	107	SFAdapt CnvrgLvl	115	IPM TrqTrim Kp[755]	1642
		Slip Reg Enable	100	Phase Delay Comp	108	SFAdapt CnvrgLmt	116	IPM TrqTrim Ki[755]	1643
		Slip Reg Ki	101	Trq Comp Mode	109	PM Bus Prot[755]	1629	IPM TrqTrim HLim[755]	1644
		Slip Reg Kp	102	Trq Comp Mtring	110	IPMVqFFwdCemf[755]	1637	IPM TrqTrim LLim[755]	1645

File	Group	Parameters							
Feedback & I/O 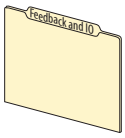	Feedback	Pri Vel Fdbk Sel	125	Alt Vel Feedback	130	Psn Fdbk Sel	135	Virtual EncDelay [755]	140
		Pri Vel FdbkFltr	126	Active Vel Fdbk	131	Load Psn FdbkSel [755]	136	Virtual Enc EPR [755]	141
		Pri Vel Feedback	127	Aux Vel Fdbk Sel	132	Open Loop Fdbk	137	Virtual Enc Psn [755]	142
		Alt Vel Fdbk Sel	128	Aux Vel FdbkFltr	133	Simulator Fdbk	138		
		Alt Vel FdbkFltr	129	Aux Vel Feedback	134	Delayed Spd Ref [755]	139		
	Digin Functions	Digital In Cfg	150	DI Jog 1	166	DI MOP Dec	178	DI PID Hold	192
		DI Enable	155	DI Jog 1 Forward	167	DI Accel 2	179	DI PID Reset	193
		DI Clear Fault	156	DI Jog 1 Reverse	168	DI Decel 2	180	DI PID Invert	194
		DI Aux Fault	157	DI Jog 2	169	DI SpTqPs Sel 0	181	DI Torque StptA	195
		DI Stop	158	DI Jog 2 Forward	170	DI SpTqPs Sel 1	182	DI Fwd End Limit	196
		DI Cur Lmt Stop	159	DI Jog 2 Reverse	171	DI Stop Mode B	185	DI Fwd Dec Limit	197
		DI Coast Stop	160	DI Manual Ctrl	172	DI BusReg Mode B	186	DI Rev End Limit	198
		DI Start	161	DI Speed Sel 0	173	DI PwrLoss ModeB	187	DI Rev Dec Limit	199
		DI Fwd Reverse	162	DI Speed Sel 1	174	DI Pwr Loss	188	DI PHdwr OvrTrvl	200
		DI Run	163	DI Speed Sel 2	175	DI Precharge	189	DI NHdwr OvrTrvl	201
		DI Run Forward	164	DI HOA Start	176	DI Prchrg Seal	190		
		DI Run Reverse	165	DI MOP Inc	177	DI PID Enable	191		
	Control Board IO [755]	Digital In Sts	220						
	Digital Inputs [753]	Digital In Sts	220	Dig In Filt Mask	222	Dig In Filt	223		
	Digital Outputs [753]	Dig Out Sts	225	R00 Level Sel	231	R00 Off Time	235	T00 Level CmpSts	243
		Dig Out Invert	226	R00 Level	232	T00 Sel	240	T00 On Time	244
		Dig Out Setpoint	227	R00 Level CmpSts	233	T00 Level Sel	241	T00 Off Time	245
		R00 Sel	230	R00 On Time	234	T00 Level	242		
	Motor PTC [753]	PTC Cfg	250	PTC Sts	251				
	Analog Inputs [753]	Anlg In Type	255	Anlg In0 Value	260	Anlg In0 LssActn	263	Anlg In0 Filt BW	266
		Anlg In Sqrt	256	Anlg In0 Hi	261	Anlg In0 Raw Val	264		
		Anlg In Loss Sts	257	Anlg In0 Lo	262	Anlg In0 Filt Gn	265		
	Analog Outputs [753]	Anlg Out Type	270	Anlg Out0 Stpt	276	Anlg Out0 DataLo	279	Anlg Out0 Val	282
		Anlg Out Abs	271	Anlg Out0 Data	277	Anlg Out0 Hi	280		
		Anlg Out0 Sel	275	Anlg Out0 DataHi	278	Anlg Out0 Lo	281		
	R0 Predict Main [753]	R0 PredMaint Sts	285	R00 Load Amps	287	R00 ElapsedLife	289	R00 LifeEvntLvl	291
		R00 Load Type	286	R00 TotalLife	288	R00 RemainLife	290	R00 LifeEvntActn	292

File	Group	Parameters							
Drive Cfg 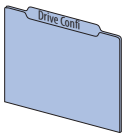	Preferences	Speed Units	300	Access Level	301	Language	302		
	Control Cfg	Voltage Class	305	SpdTrqPsn Mode B	310	SLAT Err Stpt	314	Prchrg Err Cfg	323
		Duty Rating	306	SpdTrqPsn Mode C	311	SLAT Dwell Time	315		
		Direction Mode	308	SpdTrqPsn Mode D	312	Prchrg Control	321		
		SpdTrqPsn Mode A	309	Actv SpTqPs Mode	313	Prchrg Delay	322		
	Auto Manual Ctrl	Logic Mask	324	Manual Cmd Mask	326	Alt Man Ref Sel	328	Alt Man Ref AnLo	330
		Auto Mask	325	Manual Ref Mask	327	Alt Man Ref AnHi	329	Manual Preload	331
	Drive Memory	Reset Meters	336						
	Start Features	Start At PowerUp	345	SleepWake RefSel	351	FS Gain	357	FS Reconnect Dly	363
		PowerUp Delay	346	Sleep Level	352	FS Ki	358	FS Msrmnt CurLvl	364
		Auto Retry Fault	347	Sleep Time	353	FS Speed Reg Ki	359	FS Brk Lvl	365
		Auto Rstrt Tries	348	Wake Level	354	FS Speed Reg Kp	360	FS Brk Time	366
		Auto Rstrt Delay	349	Wake Time	355	FS Excitation Ki	361	FS ZSpd Thresh	367
		Sleep Wake Mode	350	FlyingStart Mode	356	FS Excitation Kp	362		
	Braking Features	Stop Mode A	370	Bus Limit ACR Kp	379	Flux Braking Ki	390	DC Brk Vd Fltr	399
		Stop Mode B	371	Bus Reg Ki	380	Flux Braking Kp	391	Fast Braking Ki	400
		Bus Reg Mode A	372	Bus Reg Kp	381	Stop Dwell Time	392	Fast Braking Kp	401
		Bus Reg Mode B	373	DB Resistor Type	382	DC Brake Lvl Sel	393	Brake Off Adj 1	402
		Bus Reg Lvl Cfg	374	DB Ext Ohms	383	DC Brake Level	394	Brake Off Adj 2	403
		Bus Reg Level	375	DB Ext Watts	384	DC Brake Time	395	Dec Inhibit Actn	409
		Bus Limit Kp	376	DB ExtPulseWatts	385	DC Brake Ki	396		
		Bus Limit Kd	377	Flux Braking En	388	DC Brake Kp	397		
		Bus Limit ACR Ki	378	Flux Braking Lmt	389	DC Brk Vq Fltr	398		

File	Group	Parameters							
Protection 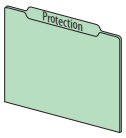	Motor Overload	Motor OL Actn	410	Mtr OL Factor	413	MtrOL Reset Time	416		
		Mtr OL at Pwr Up	411	Mtr OL Hertz	414	Mtr OL Counts	418		
		Mtr OL Alarm Lvl	412	Mtr OL Reset Lvl	415	Mtr OL Trip Time	419		
	Load Limits	Drive OL Mode	420	Motor Power Lmt	427	Shear Pin Cfg	434	Load Loss Action	441
		Current Lmt Sel	421	Current Limit Kd	428	Shear Pin 1 Actn	435	Load Loss Level	442
		Current Limit 1	422	Current Limit Ki	429	Shear Pin1 Level	436	Load Loss Time	443
		Current Limit 2	423	Current Limit Kp	430	Shear Pin 1 Time	437	OutPhaseLossActn	444
		Active Cur Lmt	424	Id Lo FreqCur Kp	431	Shear Pin 2 Actn	438	Out PhaseLossLvl	445
		Current Rate Lmt	425	Iq Lo FreqCur Kp	432	Shear Pin2 Level	439		
		Regen Power Lmt	426	Jerk Gain	433	Shear Pin 2 Time	440		
	Power Loss	Power Loss Actn	449	Pwr Loss Mode B	453	PwrLoss RT BusKd	457	UnderVltg Level	461
		Pwr Loss Mode A	450	Pwr Loss B Level	454	PwrLoss RT ACRKp	458	InPhase LossActn	462
		Pwr Loss A Level	451	Pwr Loss B Time	455	PwrLoss RT ACRKi	459	InPhase Loss Lvl	463
		Pwr Loss A Time	452	PwrLoss RT BusKp	456	UnderVltg Action	460	DC Bus Mem Reset	464
	Ground Fault	Ground Warn Actn	466	Ground Warn Lvl	467				
	Flt/Alarm Cfg	AutoClrFlt Tries	338	Auto Retry Fault	347	Motor OL Actn	410	Power Loss Actn	449
		AutoClrFlt Delay	339	Auto Rstrt Tries	348	Shear Pin 1 Actn	435	InPhase LossActn	462
		AutoClrCntrDelay	340	Auto Rstrt Delay	349	Shear Pin 2 Actn	438	Ground Warn Actn	466
		Rstrt Cntr Delay	343	Dec Inhibit Actn	409	OutPhaseLossActn	444	Minor Flt Cfg	950
	Predictive Main	PredMaint Sts	469	HSFan Derate	488	MtrBrngTotalLife	502	MchBrngTotalLife	511
		PredMaintAmbTemp	470	HSFan TotalLife	489	MtrBrngElpsdLife	503	MchBrngElpsdLife	512
		PredMaint Rst En	471	HSFan ElpsdLife	490	MtrBrngRemainLif	504	MchBrngRemainLif	513
		PredMaint Reset	472	HSFan RemainLife	491	MtrBrngEventLvl	505	MchBrngEventLvl	514
		CbFan Derate [755 (8+)]	481	HSFan EventLevel	492	MtrBrngEventActn	506	MchBrngEventActn	515
		CbFan TotalLife [755 (8+)]	482	HSFan EventActn	493	MtrBrng ResetLog	507	MchBrngResetLog	516
		CbFan ElpsdLife [755 (8+)]	483	HSFan ResetLog [(1)]	494	MtrLubeElpsdHrs	508	MchLubeElpsdHrs	517
		CbFan RemainLife [755 (8+)]	484	InFan Derate	495	MtrLubeEventLvl	509	MchLube EventLvl	518
		CbFan EventLevel [755 (8+)]	485	InFan TotalLife	496	MtrLubeEventActn	510	MchLubeEventActn	519
		CbFan EventActn [755 (8+)]	486	InFan ElpsdLife	497				
				InFan RemainLife	498				
				InFan EventLevel	499				
				InFan EventActn	500				
				InFan ResetLog [(1)]	501				
	Emergency Override	DI EmergencyOVRD	1680	Purge Frequency	1682	EmergMode Status	1684		
		Emerg OVRD Mode	1681	Emerg Prot OVRD	1683				

[(1)] 755 Frames 1…7 only.

File	Group	Parameters							
Speed Control 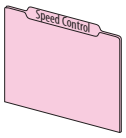	Speed Limits	Max Fwd Speed	520	Min Rev Speed	523	Skip Speed 1	526	Skip Speed Band	529
		Max Rev Speed	521	Overspeed Limit	524	Skip Speed 2	527		
		Min Fwd Speed	522	Zero Speed Limit	525	Skip Speed 3	528		
	Speed Ramp Rates	Accel Time 1	535	Decel Time 1	537	Jog Acc Dec Time	539	S Curve Decel	541
		Accel Time 2	536	Decel Time 2	538	S Curve Accel	540		
	Speed Reference	Spd Ref A Sel	545	Spd Ref Scale	555	DI ManRef AnlgLo	565	Spd Ref Filter	588
		Spd Ref A Stpt	546	Jog Speed 1	556	MOP Init Select	566	Spd Ref Fltr BW	589
		Spd Ref A AnlgHi	547	Jog Speed 2	557	MOP Init Stpt	567	Spd Ref FltrGain	590
		Spd Ref A AnlgLo	548	MOP Reference	558	Preset Speed 1	571	Spd Ref Sel Sts	591
		Spd Ref A Mult	549	Save MOP Ref	559	Preset Speed 2	572	Selected Spd Ref	592
		Spd Ref B Sel	550	MOP Rate	560	Preset Speed 3	573	Limited Spd Ref	593
		Spd Ref B Stpt	551	MOP High Limit	561	Preset Speed 4	574	Ramped Spd Ref	594
		Spd Ref B AnlgHi	552	MOP Low Limit	562	Preset Speed 5	575	Filtered Spd Ref	595
		Spd Ref B AnlgLo	553	DI ManRef Sel	563	Preset Speed 6	576	Speed Rate Ref	596
		Spd Ref B Mult	554	DI ManRef AnlgHi	564	Preset Speed 7	577	Final Speed Ref	597
	Speed Trim	Trim Ref A Sel	600	Trim Ref B Stpt	605	TrmPct RefA AnHi	610	TrmPct RefB AnLo	615
		Trim Ref A Stpt	601	Trim RefB AnlgHi	606	TrmPct RefA AnLo	611	SpdTrimPrcRefSrc	616
		Trim RefA AnlgHi	602	Trim RefB AnlgLo	607	TrmPct RefB Sel	612	Spd Trim Source	617
		Trim RefA AnlgLo	603	TrmPct RefA Sel	608	TrmPct RefB Stpt	613		
		Trim Ref B Sel	604	TrmPct RefA Stpt	609	TrmPct RefB AnHi	614		
	Slip/Droop Comp	Droop RPM at FLA	620	Slip RPM at FLA	621	Slip Comp BW	622	VHzSV SpdTrimReg	623
	Speed Regulator	Spd Options Ctrl	635	SpdReg AntiBckup	643	AltSpdErr FltrBW	651	SReg OutFltr BW	659
		Speed Reg BW	636	Spd Err Fltr BW	644	SReg Trq Preset	652	SReg Output	660
		SReg FB Fltr Sel	637	Speed Reg Kp	645	Spd Loop Damping	653	VHzSV Spd Reg Kp	663
		SReg FB FltrGain	638	Speed Reg Max Kp	646	Spd Reg Int Out	654	VHzSV Spd Reg Ki	664
		SReg FB Fltr BW	639	Speed Reg Ki	647	Spd Reg Pos Lmt	655	Active Vel Fdbk	131
		Filtered SpdFdbk	640	Alt Speed Reg BW	648	Spd Reg Neg Lmt	656		
		Speed Error	641	Alt Speed Reg Kp	649	SReg OutFltr Sel	657		
		Servo Lock Gain [755]	642	Alt Speed Reg Ki	650	SReg OutFltrGain	658		
	Speed Comp	Speed Comp Sel	665	Speed Comp Gain	666	Speed Comp Out	667		
Torque Control	Torque Limits	Pos Torque Limit	670	Neg Torque Limit	671				
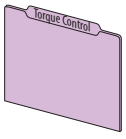	Torque Reference	Trq Ref A Sel	675	Trq Ref A Mult	679	Trq Ref B AnlgLo	683	Notch Fltr Freq	687
		Trq Ref A Stpt	676	Trq Ref B Sel	680	Trq Ref B Mult	684	Notch Fltr Atten	688
		Trq Ref A AnlgHi	677	Trq Ref B Stpt	681	Selected Trq Ref	685	Filtered Trq Ref	689
		Trq Ref A AnlgLo	678	Trq Ref B AnlgHi	682	Torque Step	686	Limited Trq Ref	690
	Inertia Comp [755]	Inertia CompMode	695	Inertia Dec Gain	697	Inertia Comp Out	699		
		Inertia Acc Gain	696	Inert Comp LPFBW	698	Ext Ramped Ref	700		
	Inertia Adaption [755]	InAdp LdObs Mode	704	InertiaAdaptGain	706	InertiaTrqAdd	708	InertAdptFltrBW	710
		Inertia Adapt BW	705	Load Estimate	707	IA LdObs Delay	709	Load Observer BW	711
	Friction Comp [755]	FrctnComp Mode	1560	FrctnComp Hyst	1562	FrctnComp Stick	1564	FrctnComp Rated	1566
		FrctnComp Trig	1561	FrctnComp Time	1563	FrctnComp Slip	1565	FrctnComp Out	1567

File	Group	Parameters							
Position Control 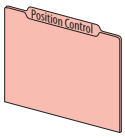	Position Cfg/Sts	PTP PsnRefStatus	720	Psn Selected Ref	722	Psn Reg Status	724	In Pos Psn Band	726
		Position Control	721	Psn Command	723	Zero Position	725	In Pos Psn Dwell	727
	Position Homing	Homing Status	730	DI OL Home Limit	734	User Home Psn	738	Home Trq Offset	742
		Homing Control	731	Find Home Speed	735	Home Trq Thresh	739	Home Return Spd	743
		DI Find Home	732	Find Home Ramp	736	Home Trq Time	740	Home Decel	744
		DI Redefine Psn	733	Actual Home Psn	737	Home Trq Level	741		
	Position Watch [755]	PsnWatch1 Select	745	PsnWatch1 Stpt	747	PsnWatch2 DtctIn	749		
		PsnWatch1 DtctIn	746	PsnWatch2 Select	748	PsnWatch2 Stpt	750		
	Interpolator [755]	Interp Control	755	Interp Vel Input	757	Interp Psn Out	759	Interp Trq Out	761
		Interp Psn Input	756	Interp Trq Input	758	Interp Vel Out	760		
	Direct	Psn Ref Select	765	Psn Direct Stpt	766	Psn Direct Ref	767		
	Point to Point	PTP Control	770	PTP Reference	776	PTP Decel Time	782	PTP Vel Override	788
		PTP Mode	771	PTP Feedback	777	PTP Speed FwdRef	783	PTP EGR Mult	789
		DI Indx Step	772	PTP Ref Scale	778	PTP Command	784	PTP EGR Div	790
		DI Indx StepRev	773	PTP Index Preset	779	PTP Fwd Vel Lmt	785		
		DI Indx StepPrst	774	PTP Setpoint	780	PTP Rev Vel Lmt	786		
		PTP Ref Sel	775	PTP Accel Time	781	PTP S Curve	787		
	Phase Lock Loop [755]	PLL Control	795	PLL Psn Stpt	800	PLL Rvls Input	805	PLL Enc Out Adv	810
		PLL Ext Spd Sel	796	PLL BW	801	PLL Psn Out Fltr	806	PLL EPR Output	811
		PLL Ext Spd Stpt	797	PLL LPFilter BW	802	PLL Speed Out	807	PLL Rvls Output	812
		PLL Ext SpdScale	798	PLL Virt Enc RPM	803	PLL Speed OutAdv	808		
		PLL Psn Ref Sel	799	PLL EPR Input	804	PLL Enc Out	809		
	Electronic Gear	Psn Ref EGR Out	815	Psn EGR Mult	816	Psn EGR Div	817		
	Position Offset	Psn Offset 1 Sel	820	Psn Offset 2 Sel	822	Psn Offset Vel	824		
		Psn Offset 1	821	Psn Offset 2	823				
	Ld Psn Fdbk Scal [755]	LdPsn Fdbk Mult	825	LdPsn Fdbk Div	826				
	Position Reg	PsnNtchFltrFreq	830	Psn Error	835	PReg Pos Int Lmt	840	PReg Neg Spd Lmt	845
		PsnNtchFltrDepth	831	Psn Actual	836	PReg Neg Int Lmt	841	Psn Reg Droop	846
		Psn Out Fltr Sel	832	Psn Load Actual [755]	837	PsnReg IntgrlOut	842	Psn Fdbk	847
		Psn Out FltrGain	833	Psn Reg Ki	838	PsnReg Spd Out	843	Psn Gear Ratio	848
		Psn Out Fltr BW	834	Psn Reg Kp	839	PReg Pos Spd Lmt	844		
Communication 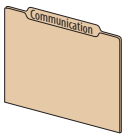	Comm Control	DPI Pt1 Flt Actn	865	DPI Pt3 Flt Ref	870	Port 5 Reference	875	DPI Ref Rslt	880
		DPI Pt2 Flt Actn	866	Port 1 Reference	871	Port 6 Reference	876	DPI Ramp Rslt	881
		DPI Pt3 Flt Actn	867	Port 2 Reference	872	Port13 Reference [755]	877	DPI Logic Rslt	882
		DPI Pt1 Flt Ref	868	Port 3 Reference	873	Port14 Reference	878	Drive Ref Rslt	883
		DPI Pt2 Flt Ref	869	Port 4 Reference	874	Drive Logic Rslt	879	Drive Ramp Rslt	884
	Security	Port Mask Act	885	Logic Mask Act	886	Write Mask Act	887	Write Mask Cfg	888
	DPI Datalinks	Data In A1	895	Data In C1	899	Data Out A1	905	Data Out C1	909
		Data In A2	896	Data In C2	900	Data Out A2	906	Data Out C2	910
		Data In B1	897	Data In D1	901	Data Out B1	907	Data Out D1	911
		Data In B2	898	Data In D2	902	Data Out B2	908	Data Out D2	912
	Owners	Stop Owner	919	Jog Owner	921	Clear Flt Owner	923	Ref Select Owner	925
		Start Owner	920	Dir Owner	922	Manual Owner	924		
	ODK Datalinks	UserData Int 00…31		1700…1731		ScaleBlk Sel 00…07		1900, 1904,…1928	
		UserData Real 00…31		1800…1831		ScaleBlk Scal 00…07		1901, 1905,…1929	
						ScaleBlk Int 00…07		1902, 1906,…1930	
						ScaleBlk Real 00…07		1903, 1907,…1931	

File	Group	Parameters							
Diagnostics 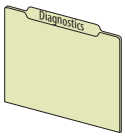	Status	Speed Ref Source	930	Last StrtInhibit	934	Drive OL Count	940	Drive Temp C	944
		Last StartSource	931	Drive Status 1	935	IGBT Temp Pct	941	At Limit Status	945
		Last Stop Source	932	Drive Status 2	936	IGBT Temp C	942	Safety Port Sts	946
		Start Inhibits	933	Condition Sts 1	937	Drive Temp Pct	943		
	Fault/Alarm Info	Minor Flt Cfg	950	Status1 at Fault	954	Fault Bus Volts	958	AlarmA at Fault	962
		Last Fault Code	951	Status2 at Fault	955	Alarm Status A	959	AlarmB at Fault	963
		Fault Status A	952	Fault Frequency	956	Alarm Status B	960	MCB FPGA Actn	964
		Fault Status B	953	Fault Amps	957	Type 2 Alarms	961	Note: Parameter 964 **only applies** to PowerFlex 753.	
	Testpoints	Testpoint Sel 1	970	Testpoint Sel 2	974	Testpoint Sel 3	978	Testpoint Sel 4	982
		Testpoint Fval 1	971	Testpoint Fval 2	975	Testpoint Fval 3	979	Testpoint Fval 4	983
		Testpoint Lval 1	972	Testpoint Lval 2	976	Testpoint Lval 3	980	Testpoint Lval 4	984
	Peak Detection [755]	PkDtct Stpt Real	1035	PkDtct1PresetSel	1038	PeakDetect1 Out	1041	Peak2 Cfg	1044
		PkDtct Stpt DInt	1036	Peak1 Cfg	1039	PkDtct2 In Sel	1042	Peak 2 Change	1045
		PkDtct1 In Sel	1037	Peak 1 Change	1040	PkDtct2PresetSel	1043	PeakDetect2 Out	1046
Applications 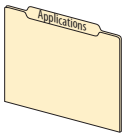	Process PID	PID Cfg	1065	PID Fdbk AnIgHi	1073	PID Upper Limit	1081	PID Status	1089
		PID Control	1066	PID Fdbk AnIgLo	1074	PID Lower Limit	1082	PID Ref Meter	1090
		PID Ref Sel	1067	PID FBLoss SpSel	1075	PID Deadband	1083	PID Fdbk Meter	1091
		PID Ref AnIgHi	1068	PID FBLoss TqSel	1076	PID LP Filter BW	1084	PID Error Meter	1092
		PID Ref AnIgLo	1069	PID Fdbk	1077	PID Preload	1085	PID Output Meter	1093
		PID Setpoint	1070	PID Fdbk Mult	1078	PID Prop Gain	1086		
		PID Ref Mult	1071	PID Output Sel	1079	PID Int Time	1087		
		PID Fdbk Sel	1072	PID Output Mult	1080	PID Deriv Time	1088		
	Torque Prove [755]	Trq Prove Cfg	1100	Trq Lmt SlewRate	1104	Brk Set Time	1108	MicroPsnScalePct	1112
		Trq Prove Setup	1101	Speed Dev Band	1105	Brk Alarm Travel	1109	ZeroSpdFloatTime	1113
		DI FloatMicroPsn	1102	SpdBand Intgrtr	1106	Brk Slip Count	1110	Brake Test Torq [755]	1114
		Trq Prove Status	1103	Brk Release Time	1107	Float Tolerance	1111		
	Fibers Function	Fiber Control	1120	Traverse Inc	1123	P Jump	1126		
		Fiber Status	1121	Traverse Dec	1124	DI Fiber SyncEna	1129		
		Sync Time	1122	Max Traverse	1125	DI Fiber TravDis	1130		
	Adjustable Vltg	Adj Vltg Config	1131	Adj Vltg Trim Lo	1138	Adj Vltg Preset3	1144	Adj Vltg Scurve	1150
		Adj Vltg Select	1133	Adj Vltg Command	1139	Adj Vltg Preset4	1145	Adj Vltg TrimPct	1151
		Adj Vltg Ref Hi	1134	Adj Vltg AccTime	1140	Adj Vltg Preset5	1146	Min Adj Voltage	1152
		Adj Vltg Ref Lo	1135	Adj Vltg DecTime	1141	Adj Vltg Preset6	1147	Dead Time Comp	1153
		Adj Vltg TrimSel	1136	Adj Vltg Preset1	1142	Adj Vltg Preset7	1148	DC Offset Ctrl	1154
		Adj Vltg Trim Hi	1137	Adj Vltg Preset2	1143	Adj Vltg RefMult	1149		
	Pump Jack	Rod Speed	1165	TorqAlarm Dwell	1170	Max Rod Speed	1175	PCP Pump Sheave	1180
		Rod Torque	1166	TorqAlarm Level	1171	Max Rod Torque	1176	Gearbox Limit	1181
		Rod Speed Cmd	1167	TorqAlm Timeout	1172	Min Rod Speed	1177	Gearbox Rating	1182
		TorqAlarm Action	1168	TorqAlarm TOActn	1173	Motor Sheave	1178	Gearbox Ratio	1183
		TorqAlarm Config	1169	Total Gear Ratio	1174	OilWell Pump Cfg	1179	Gearbox Sheave	1184
	Pump Off	Pump Off Config	1187	Set Top ofStroke	1193	Pct Lift Torque	1199	Day Stroke Count	1205
		Pump Off Setup	1188	Torque Setpoint	1194	Pct Drop Torque	1200	DI PumpOff Disbl	1206
		Pump Off Action	1189	Pump Off Level	1195	Stroke Pos Count	1201	Pump OffSleepLvl	1207
		Pump Off Control	1190	Pump Off Speed	1196	Stroke Per Min	1202	DI Pump Baseline	1208
		Pump Off Status	1191	Pump Off Time	1197	Pump Off Count	1203		
		Pump Cycle Store	1192	Pct Cycle Torque	1198	PumpOff SleepCnt	1204		

File	Group	Parameters							
Applications 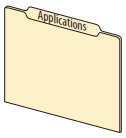	Profiling [755]	Profile Status	1210	DI Vel Override	1221	Step 1, 2, 3…16 Type	1230, 1240, 1250…1380		
		Units Traveled	1212	DI StrtStep Sel0	1222	Step 1, 2, 3…16 Velocity	1231, 1241, 1251…1381		
		Profile Command	1213	DI StrtStep Sel1	1223	Step 1, 2, 3…16 Accel	1232, 1242, 1252…1382		
		Counts Per Unit	1215	DI StrtStep Sel2	1224	Step 1, 2, 3…16 Decel	1233, 1243, 1253…1383		
		ProfVel Override	1216	DI StrtStep Sel3	1225	Step 1, 2, 3…16 Value	1234, 1244, 1254…1384		
		Prof DI Invert	1217	DI StrtStep Sel4	1226	Step 1, 2, 3…16 Dwell	1235, 1245, 1255…1385		
		DI Hold Step	1218			Step 1, 2, 3…16 Batch	1236, 1246, 1256…1386		
		DI Abort Step	1219			Step 1, 2, 3…16 Next	1237, 1247, 1257…1387		
		DI Abort Profile	1220			Step 1, 2, 3…16 Action	1238, 1248, 1258…1388		
						Step 1, 2, 3…16 Dig In	1239, 1249, 1259…1389		
	Camming [755]	PCAM Control	1390	PCAM Span X	1396	PCAM Main Pt X 0, 1, 2…15	1407, 1409, 1411…1437		
		PCAM Mode	1391	PCAM Scale X	1397	PCAM Main Pt Y 0, 1, 2…15	1408, 1410, 1412…1438		
		PCAM Psn Select	1392	PCAM Span Y	1398	PCAM Aux EndPnt	1439		
		PCAM Psn Stpt	1393	PCAM ScaleY Sel	1399	PCAM Aux Types	1440		
		PCAM Psn Ofst	1394	PCAM ScaleYSetPt	1400	PCAM Aux Pt X 1, 2, 3…15	1441, 1443, 1445…1469		
		PCAM PsnOfst Eps	1395	PCAM VelScaleSel	1401	PCAM Aux Pt Y 1, 2, 3…15	1442, 1444, 1446…1470		
				PCAM VelScaleSP	1402	PCAM Status	1471		
				PCAM Slope Begin	1403	PCAM Vel Out	1472		
				PCAM Slope End	1404	PCAM Psn Out	1473		
				PCAM Main EndPnt	1405	DI PCAM Start	1474		
				PCAM Main Types	1406				
	Roll Position [755]	Roll Psn Config	1500	Roll Psn Preset	1504	RP Rvls Output	1508	RP Unit Out	1512
		Roll Psn Status	1501	Roll Psn Offset	1505	RP Unwind	1509		
		RP Psn Fdbk Stpt	1502	RP EPR Input	1506	RP Unit Scale	1510		
		RP Psn Fdbk Sel	1503	RP Rvls Input	1507	RP Psn Output	1511		
	Torque Boost [755]	PsnTrqBst Ctrl	1515	PsnTrqBst UNWCnt	1519	PsnTrqBst Ps X4	1523	PsnTrqBst Trq Y4	1527
		PsnTrqBst Sts	1516	PsnTrqBst Ps X1	1520	PsnTrqBst Ps X5	1524	PsnTrqBst TrqOut	1528
		PsnTrqBst RefSel	1517	PsnTrqBst Ps X2	1521	PsnTrqBst Trq Y2	1525		
		PsnTrqBstPsnOfst	1518	PsnTrqBst Ps X3	1522	PsnTrqBst Trq Y3	1526		
	Variable Boost	VB Config	1535	VB Maximum	1540	VB Flux Thresh	1545	VB Cur Thresh	1550
		VB Status	1536	VB Accel Rate	1541	VB Flux Lag Freq	1546	VB Rate Lag Freq	1551
		VB Voltage	1537	VB Decel Rate	1542	VB Filt Flux Cur	1547		
		VB Time	1538	VB Frequency	1543	VB Current Rate	1548		
		VB Minimum	1539	VB Min Freq	1544	VB Current Hyst	1549		
	Spindle Orient [755]	SO Config	1580	SO EPR Input	1584	SO Unit Scale	1588	SO Decel Time	1592
		SO Status	1581	SO Rvls Input	1585	SO Position Out	1589	SO Fwd Vel Lmt	1593
		SO Setpoint	1582	SO Rvls Output	1586	SO Unit Out	1590	SO Rev Vel Lmt	1594
		SO Offset	1583	SO Cnts per Rvls	1587	SO Accel Time	1591		
	Id Compensation [755]	Id Comp Enbl	1600	Id Comp Mtrng 4	1607	Id Comp Regen 1	1613	Id Comp Regen 4	1619
		Id Comp Mtrng 1	1601	IdCompMtrng 4 Iq	1608	IdCompRegen 1 Iq	1614	IdCompRegen 4 Iq	1620
		IdCompMtrng 1 Iq	1602	Id Comp Mtrng 5	1609	Id Comp Regen 2	1615	Id Comp Regen 5	1621
		Id Comp Mtrng 2	1603	IdCompMtrng 5 Iq	1610	IdCompRegen 2 Iq	1616	IdCompRegen 5 Iq	1622
		IdCompMtrng 2 Iq	1604	Id Comp Mtrng 6	1611	Id Comp Regen 3	1617	Id Comp Regen 6	1623
		Id Comp Mtrng 3	1605	IdCompMtrng 6 Iq	1612	IdCompRegen 3 Iq	1618	IdCompRegen 6 Iq	1624
		IdCompMtrng 3 Iq	1606						

Inverter Common (Port 10)

Inverter Common parameters are only used by PowerFlex 755 Frame 8 and larger drives.

Parameter descriptions begin on page 222.

File	Group	Parameters							
Inverter Common 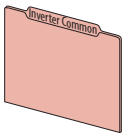	System Ratings	Sys Rated Amps	1	I1 Rated Amps	3	I3 Rated Amps	5		
		Sys Rated Volts	2	I2 Rated Amps	4				
	Status	Online Status	10	Fault Status	12	Alarm Status	13		
	Metering	Ground Current	18	Recfg Acknowledg	20	Effctv I Rating	21		
	Testpoints	Testpoint Sel 1	30	Testpoint Val 1	31	Testpoint Sel 2	32	Testpoint Val 2	33

Inverter *n* (Port 10)

Inverter *n* parameters are only used by PowerFlex 755 Frame 8 and larger drives.

Parameter descriptions begin on page 224.

File	Group	Parameters					
Inverter n 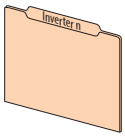	Status	I1 Fault Status	105	I2 Fault Status	205	I3 Fault Status	305
		I1 Alarm Status	107	I2 Alarm Status	207	I3 Alarm Status	307
	Metering	I1 U Phase Curr	115	I2 U Phase Curr	215	I3 U Phase Curr	315
		I1 V Phase Curr	116	I2 V Phase Curr	216	I32 V Phase Curr	316
		I1 W Phase Curr	117	I2 W Phase Curr	217	I3 W Phase Curr	317
		I1 Gnd Current	118	I2 Gnd Current	218	I3 Gnd Current	318
		I1 DC Bus Volt	119	I2 DC Bus Volt	219	I3 DC Bus Volt	319
		I1 Heatsink Temp	120	I2 Heatsink Temp	220	I3 Heatsink Temp	320
		I1 IGBT Temp	121	I2 IGBT Temp	221	I3 IGBT Temp	321
		I1 HSFan Speed	124	I2 HSFan Speed	224	I3 HSFan Speed	324
		I1 InFan 1 Speed	125	I2 InFan 1 Speed	225	I3 InFan 1 Speed	325
		I1 InFan 2 Speed	126	I2 InFan 2 Speed	226	I3 InFan 2 Speed	326
	Predictive Main	I1 PredMainReset	127	I2 PredMainReset	227	I3 PredMainReset	327
		I1 HSFanElpsdLif	128	I2 HSFanElpsdLif	228	I3 HSFanElpsdLif	328
		I1 InFanElpsdLif	129	I2 InFanElpsdLif	229	I3 InFanElpsdLif	329
	Testpoints	I1 Testpt Sel 1	140	I2 Testpt Sel 1	240	I3 Testpt Sel 1	340
		I1 Testpt Val 1	141	I2 Testpt Val 1	241	I3 Testpt Val 1	341
		I1 Testpt Sel 2	142	I2 Testpt Sel 2	242	I3 Testpt Sel 2	342
		I1 Testpt Val 2	143	I2 Testpt Val 2	243	I3 Testpt Val 2	343

Converter Common (Port 11)

Converter Common parameters are only used by AC input PowerFlex 755 Frame 8 and larger drives.

Parameter descriptions begin on page 227.

File	Group	Parameters					
Converter Common 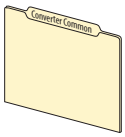	System Ratings	Sys Rated Amps	1	C1 Rated Amps	3	C3 Rated Amps	5
		Sys Rated Volts	2	C2 Rated Amps	4		
	Status	Online Status	10	Fault Status	12	Alarm Status	13
	Configuration	Gnd Cur Flt Lvl	16	Converter Actn	17		
	Metering	L1 Phase Curr	20	L3 Phase Curr	22	SCR Temp	24
		L2 Phase Curr	21	Heatsink Temp	23	Gate Board Temp	25
	Testpoints	Testpoint Sel 1	30	Testpoint Sel 2	32		
		Testpoint Val 1	31	Testpoint Val 2	33		

Converter *n* (Port 11)

Converter *n* parameters are only used by AC input PowerFlex 755 Frame 8 and larger drives.

Parameter descriptions begin on page 229.

File	Group	Parameters					
Converter n 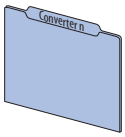	Status	C1 Fault Status1	105	C2 Fault Status1	205	C3 Fault Status1	305
		C1 Fault Status2	106	C2 Fault Status2	206	C3 Fault Status2	306
		C1 Alarm Status1	107	C2 Alarm Status1	207	C3 Alarm Status1	307
	Metering	C1 L1 Phase Curr	115	C2 L1 Phase Curr	215	C3 L1 Phase Curr	315
		C1 L2 Phase Curr	116	C2 L2 Phase Curr	216	C3 L2 Phase Curr	316
		C1 L3 Phase Curr	117	C2 L3 Phase Curr	217	C3 L3 Phase Curr	317
		C1 Gnd Current	118	C2 Gnd Current	218	C3 Gnd Current	318
		C1 DC Bus Volt	119	C2 DC Bus Volt	219	C3 DC Bus Volt	319
		C1 Heatsink Temp	120	C2 Heatsink Temp	220	C3 Heatsink Temp	320
		C1 SCR Temp	121	C2 SCR Temp	221	C3 SCR Temp	321
		C1 GateBoardTemp	122	C2 GateBoardTemp	222	C3 GateBoardTemp	322
		C1 AC Line Freq	123	C2 AC Line Freq	223	C3 AC Line Freq	323
		C1 L12 Line Volt	125	C2 L12 Line Volt	225	C3 L12 Line Volt	325
		C1 L23 Line Volt	126	C2 L23 Line Volt	226	C3 L23 Line Volt	326
		C1 L31 Line Volt	127	C2 L31 Line Volt	227	C3 L31 Line Volt	327
	Predictive Main	C1 PredMainReset	137	C2 PredMainReset	237	C3 PredMainReset	337
		C1 CbFanElpsdLif	138	C2 CbFanElpsdLif	238	C3 CbFanElpsdLif	338
	Testpoints	C1 Testpt Sel 1	140	C2 Testpt Sel 1	240	C3 Testpt Sel 1	340
		C1 Testpt Val 1	141	C2 Testpt Val 1	241	C3 Testpt Val 1	341
		C1 Testpt Sel 2	142	C2 Testpt Sel 2	242	C3 Testpt Sel 2	342
		C1 Testpt Val 2	143	C2 Testpt Val 2	243	C3Testpt Val 2	343

Precharge Common (Port 11)

Precharge Common parameters are only used by DC input PowerFlex 755 Frame 8 and larger drives.

Parameter descriptions begin on page 232.

File	Group	Parameters							
Precharge Common 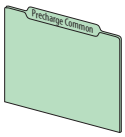	System Ratings	Sys Rated Amps	1	P1 Rated Amps	3	P3 Rated Amps	5		
		Sys Rated Volts	2	P2 Rated Amps	4				
	Status	Online Status	10	Fault Status	12	Alarm Status	13		
	Metering	Gate Board Temp	25	Main DC Bus Volt	18				
	Testpoints	Testpoint Sel 1	30	Testpoint Val 1	31	Testpoint Sel 2	32	Testpoint Val 2	33

Precharge *n* (Port 11)

Precharge *n* parameters are only used by DC input PowerFlex 755 Frame 8 and larger drives.

Parameter descriptions begin on page 234.

File	Group	Parameters					
Precharge n 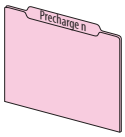	Status	P1 Board Status	104	P2 Board Status	204	P3 Board Status	304
		P1 Fault Status1	105	P2 Fault Status1	205	P3 Fault Status1	305
		P1 Fault Status2	106	P2 Fault Status2	206	P3 Fault Status2	306
		P1 Alarm Status1	107	P2 Alarm Status1	207	P3 Alarm Status1	307
	Metering	P1 DC Bus Volts	110	P2 DC Bus Volts	210	P3 DC Bus Volts	310
		P1 Main DC Volts	111	P2 Main DC Volts	211	P3 Main DC Volts	311
		P1 240VSplyVolts	112	P2 240VSplyVolts	212	P3 240VSplyVolts	312
		P1 GateBoardTemp	122	P2 GateBoardTemp	222	P3 GateBoardTemp	322
	Predictive Main	P1 PredMainReset	137	P2 PredMainReset	237	P3 PredMainReset	337
		P1 CbFanElpsdLif	138	P2 CbFanElpsdLif	238	P3 CbFanElpsdLif	338
	Testpoints	P1 Testpt Sel 1	140	P2 Testpt Sel 1	240	P3 Testpt Sel 1	340
		P1 Testpt Val 1	141	P2 Testpt Val 1	241	P3 Testpt Val 1	341
		P1 Testpt Sel 2	142	P2 Testpt Sel 2	242	P3 Testpt Sel 2	342
		P1 Testpt Val 2	143	P2 Testpt Val 2	243	P3 Testpt Val 2	343

Embedded EtherNet/IP (Port 13)

Parameter descriptions begin on page 240.

File	Group	Parameters							
Embedded EtherNet/IP Host Groups 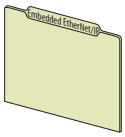	N/A	DL From Net 01	1	Port Number	33	Flt Cfg DL 01	60	DLs Fr Peer Cfg	76
		DL From Net 02	2	DLs From Net Act	34	Flt Cfg DL 02	61	DLs Fr Peer Act	77
		DL From Net 03	3	DLs To Net Act	35	Flt Cfg DL 03	62	Logic Src Cfg	78
		DL From Net 04	4	BOOTP	36	Flt Cfg DL 04	63	Ref Src Cfg	79
		DL From Net 05	5	Net Addr Src	37	Flt Cfg DL 05	64	Fr Peer Timeout	80
		DL From Net 06	6	IP Addr Cfg 1	38	Flt Cfg DL 06	65	Fr Peer Addr 1	81
		DL From Net 07	7	IP Addr Cfg 2	39	Flt Cfg DL 07	66	Fr Peer Addr 2	82
		DL From Net 08	8	IP Addr Cfg 3	40	Flt Cfg DL 08	67	Fr Peer Addr 3	83
		DL From Net 09	9	IP Addr Cfg 4	41	Flt Cfg DL 09	68	Fr Peer Addr 4	84
		DL From Net 10	10	Subnet Cfg 1	42	Flt Cfg DL 10	69	Fr Peer Enable	85
		DL From Net 11	11	Subnet Cfg 2	43	Flt Cfg DL 11	70	Fr Peer Status	86
		DL From Net 12	12	Subnet Cfg 3	44	Flt Cfg DL 12	71	DLs To Peer Cfg	87
		DL From Net 13	13	Subnet Cfg 4	45	Flt Cfg DL 13	72	DLs To Peer Act	88
		DL From Net 14	14	Gateway Cfg 1	46	Flt Cfg DL 14	73	To Peer Period	89
		DL From Net 15	15	Gateway Cfg 2	47	Flt Cfg DL 15	74	To Peer Skip	90
		DL From Net 16	16	Gateway Cfg 3	48	Flt Cfg DL 16	75	To Peer Enable	91
		DL To Net 01	17	Gateway Cfg 4	49				
		DL To Net 02	18	Net Rate Cfg	50				
		DL To Net 03	19	Net Rate Act	51				
		DL To Net 04	20	Web Enable	52				
		DL To Net 05	21	Web Features	53				
		DL To Net 06	22	Comm Flt Action	54				
		DL To Net 07	23	Idle Flt Action	55				
		DL To Net 08	24	Peer Flt Action	56				
		DL To Net 09	25	Msg Flt Action	57				
		DL To Net 10	26	Flt Cfg Logic	58				
		DL To Net 11	27	Flt Cfg Ref	59				
		DL To Net 12	28						
		DL To Net 13	29						
		DL To Net 14	30						
		DL To Net 15	31						
		DL To Net 16	32						

Embedded DeviceLogix (Port 14)

Embedded DeviceLogix parameters are only used by PowerFlex 755 drives.

Parameter descriptions begin on page 249.

File	Group	Parameters							
Embedded DeviceLogix Host Groups 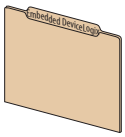	Analog Outputs	DLX Out 01	1	DLX Out 05	5	DLX Out 09	9	DLX Out 13	13
		DLX Out 02	2	DLX Out 06	6	DLX Out 10	10	DLX Out 14	14
		DLX Out 03	3	DLX Out 07	7	DLX Out 11	11	DLX Out 15	15
		DLX Out 04	4	DLX Out 08	8	DLX Out 12	12	DLX Out 16	16
	Analog Inputs	DLX In 01	17	DLX In 05	21	DLX In 09	25	DLX In 13	29
		DLX In 02	18	DLX In 06	22	DLX In 10	26	DLX In 14	30
		DLX In 03	19	DLX In 07	23	DLX In 11	27	DLX In 15	31
		DLX In 04	20	DLX In 08	24	DLX In 12	28	DLX In 16	32
	Digital Inputs	DLX DIP 01	33	DLX DIP 05	37	DLX DIP 09	41	DLX DIP 13	45
		DLX DIP 02	34	DLX DIP 06	38	DLX DIP 10	42	DLX DIP 14	46
		DLX DIP 03	35	DLX DIP 07	39	DLX DIP 11	43	DLX DIP 15	47
		DLX DIP 04	36	DLX DIP 08	40	DLX DIP 12	44	DLX DIP 16	48
	Status & Cntl	DLX DigIn Sts	49	DLX DigOut Sts	50	DLX Prog Cond	52	DLX Operation	53
				DLX DigOut Sts2	51				
	Internal Regs	DLX Real SP1	54	DLX DINT SP1	70	DLX Real InSP1	82	DLX DINT InSP1	98
		DLX Real SP2	55	DLX DINT SP2	71	DLX Real InSP2	83	DLX DINT InSP2	99
		DLX Real SP3	56	DLX DINT SP3	72	DLX Real InSP3	84	DLX DINT InSP3	100
		DLX Real SP4	57	DLX DINT SP4	73	DLX Real InSP4	85	DLX DINT InSP4	101
		DLX Real SP5	58	DLX DINT SP5	74	DLX Real InSP5	86	DLX DINT OutSP1	102
		DLX Real SP6	59	DLX DINT SP6	75	DLX Real InSP6	87	DLX DINT OutSP2	103
		DLX Real SP7	60	DLX DINT SP7	76	DLX Real InSP7	88	DLX DINT OutSP3	104
		DLX Real SP8	61	DLX DINT SP8	77	DLX Real InSP8	89	DLX DINT OutSP4	105
		DLX Real SP9	62	DLX Bool SP1	78	DLX Real OutSP1	90		
		DLX Real SP10	63	DLX Bool SP2	79	DLX Real OutSP2	91		
		DLX Real SP11	64	DLX Bool SP3	80	DLX Real OutSP3	92		
		DLX Real SP12	65	DLX Bool SP4	81	DLX Real OutSP4	93		
		DLX Real SP13	66			DLX Real OutSP5	94		
		DLX Real SP14	67			DLX Real OutSP6	95		
		DLX Real SP15	68			DLX Real OutSP7	96		
		DLX Real SP16	69			DLX Real OutSP8	97		

How Option Module Parameters are Organized

Option module parameters are only available when that option is installed in a host drive. To view and edit option module parameters, select the port number of the device you want to access from the Status Screen.

11-Series I/O Modules

Parameter descriptions begin on page 252.

File	Group	Parameters							
11-Series I/O Host Groups 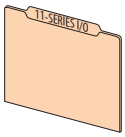	Digital Inputs	Dig In Sts	1	Dig In Filt Mask	2	Dig In Filt	3		
	Digital Outputs	Dig Out Sts	5	R00 Sel	10	R01 Sel	20	T01 Sel	30
		Dig Out Invert	6	R00 Level Sel	11	T00 Sel	20	T01 Level Sel	31
		Dig Out Setpoint	7	R00 Level	12	R01 Level Sel	21	T01 Level	32
				R00 Level CmpSts	13	T00 Level Sel	21	T01 Level CmpSts	33
				R00 On Time	14	R01 Level	22	T01 On Time	34
				R00 Off Time	15	T00 Level	22	T01 Off Time	35
						R01 Level CmpSts	23		
						T00 Level CmpSts	23		
						R01 On Time	24		
						T00 On Time	24		
						R01 Off Time	25		
						T00 Off Time	25		
	Motor PTC	ATEX Sts	41						
	Analog Inputs	Anlg In Type	45	Anlg In0 Value	50				
		Anlg In Sqrt	46	Anlg In0 Hi	51				
		Anlg In Loss Sts	47	Anlg In0 Lo	52				
				Anlg In0 LssActn	53				
				Anlg In0 Raw Val	54				
				Anlg In0 Filt Gn	55				
				Anlg In0 Filt BW	56				
	Analog Outpts	Anlg Out Type	70	Anlg Out0 Sel	75				
		Anlg Out Abs	71	Anlg Out0 Stpt	76				
				Anlg Out0 Data	77				
				Anlg Out0 DataHi	78				
				Anlg Out0 DataLo	79				
				Anlg Out0 Hi	80				
				Anlg Out0 Lo	81				
				Anlg Out0 Val	82				
	Predictive Main	PredMaint Sts	99	R00 Load Type	100	R01 Load Type	110		
				R00 Load Amps	101	R01 Load Amps	111		
				R00 TotalLife	102	R01 TotalLife	112		
				R00 ElapsedLife	103	R01 ElapsedLife	113		
				R00 RemainLife	104	R01 RemainLife	114		
				R00 LifeEvntLvl	105	R01 LifeEvntLvl	115		
				R00 LifeEvntActn	106	R01 LifeEvntActn	116		

22-Series I/O Modules

Parameter descriptions begin on page 252.

File	Group	Parameters							
22-Series I/O Host Groups 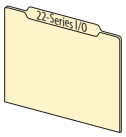	Digital Inputs	Dig In Sts	1	Dig In Filt Mask	2	Dig In Filt	3		
	Digital Outputs	Dig Out Sts	5	R00 Sel	10	R01 Sel	20	T01 Sel	30
		Dig Out Invert	6	R00 Level Sel	11	T00 Sel	20	T01 Level Sel	31
		Dig Out Setpoint	7	R00 Level	12	R01 Level Sel	21	T01 Level	32
				R00 Level CmpSts	13	T00 Level Sel	21	T01 Level CmpSts	33
				R00 On Time	14	R01 Level	22	T01 On Time	34
				R00 Off Time	15	T00 Level	22	T01 Off Time	35
						R01 Level CmpSts	23		
						T00 Level CmpSts	23		
						R01 On Time	24		
						T00 On Time	24		
						R01 Off Time	25		
						T00 Off Time	25		
	Motor PTC	PTC Cfg	40	PTC Sts	41	PTC Raw Value	42		
	Analog Inputs	Anlg In Type	45	Anlg In0 Value	50	Anlg In1 Value	60		
		Anlg In Sqrt	46	Anlg In0 Hi	51	Anlg In1 Hi	61		
		Anlg In Loss Sts	47	Anlg In0 Lo	52	Anlg In1 Lo	62		
				Anlg In0 LssActn	53	Anlg In1 LssActn	63		
				Anlg In0 Raw Val	54	Anlg In1 Raw Val	64		
				Anlg In0 Filt Gn	55	Anlg In1 Filt Gn	65		
				Anlg In0 Filt BW	56	Anlg In1 Filt BW	66		
	Analog Outpts	Anlg Out Type	70	Anlg Out0 Sel	75	Anlg Out1 Sel	85		
		Anlg Out Abs	71	Anlg Out0 Stpt	76	Anlg Out1 Stpt	86		
				Anlg Out0 Data	77	Anlg Out1 Data	87		
				Anlg Out0 DataHi	78	Anlg Out1 DataHi	88		
				Anlg Out0 DataLo	79	Anlg Out1 DataLo	89		
				Anlg Out0 Hi	80	Anlg Out1 Hi	90		
				Anlg Out0 Lo	81	Anlg Out1 Lo	91		
				Anlg Out0 Val	82	Anlg Out1 Val	92		
	Predictive Main	PredMaint Sts	99	R00 Load Type	100	R01 Load Type	110		
				R00 Load Amps	101	R01 Load Amps	111		
				R00 TotalLife	102	R01 TotalLife	112		
				R00 ElapsedLife	103	R01 ElapsedLife	113		
				R00 RemainLife	104	R01 RemainLife	114		
				R00 LifeEvntLvl	105	R01 LifeEvntLvl	115		
				R00 LifeEvntActn	106	R01 LifeEvntActn	116		

Single Incremental Encoder Module

Parameter descriptions begin on page 273.

File	Group	Parameters							
Single Incremental Encoder Host Groups 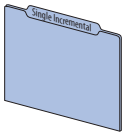	N/A	Encoder Cfg	1	Fdbk Loss Cfg	3	Encoder Status	5	Phase Loss Count	7
		Encoder PPR	2	Encoder Feedback	4	Error Status	6	Quad Loss Count	8

Dual Incremental Encoder Module

Parameter descriptions begin on page 276.

File	Group	Parameters							
Dual Incremental Encoder Host Groups 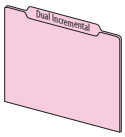	Encoder 0	Enc 0 Cfg	1	Enc 0 FB Lss Cfg	3	Enc 0 Sts	5	Enc 0 PhsLss Cnt	7
		Enc 0 PPR	2	Enc 0 FB	4	Enc 0 Error Sts	6	Enc 0 QuadLssCnt	8
	Encoder 1	Enc 1 Cfg	11	Enc 1 FB Lss Cfg	13	Enc 1 Sts	15	Enc 1 PhsLss Cnt	17
		Enc 1 PPR	12	Enc 1 FB	14	Enc 1 Error Sts	16	Enc 1 QuadLssCnt	18
	Homing Cfg	Homing Cfg	20						
	Module Status	Module Sts	21						

Universal Feedback Module

Parameter descriptions begin on page 281.

File	Group	Parameters							
Universal Feedback Host Groups 	Module	Module Sts	1						
		Module Err Reset	2						
	Feedback 0	FB0 Position	5	FB0 Cfg	8	FB0 Inc Cfg	16	FB0 SSI Turns	22
		FB0 Device Sel	6	FB0 Loss Cfg	9	FB0 Inc Sts	17	FB0 Lin CPR	25
		FB0 Identify	7	FB0 Sts	10	FB0 SSI Cfg	20	FB0 Lin Upd Rate	26
				FB0 IncAndSC PPR	15	FB0 SSI Resol	21	FB0 LinStahl Sts	27
	Feedback 1	FB1 Position	35	FB1 Cfg	38	FB1 Inc Cfg	46	FB1 SSI Turns	52
		FB1 Device Sel	36	FB1 Loss Cfg	39	FB1 Inc Sts	47	FB1 Lin CPR	55
		FB1 Identify	37	FB1 Sts	40	FB1 SSI Cfg	50	FB1 Lin Upd Rate	56
				FB1 IncAndSC PPR	45	FB1 SSI Resol	51	FB1 LinStahl Sts	57
	Encoder Out	Enc Out Sel	80	Enc Out FD PPR	82	Enc Out Z Offset	83		
		Enc Out Mode	81			Enc Out Z PPR	84		
	Registration	Rgsn Arm	90	Rgsn Latch1 Cfg	100	Rgsn Latch1 Psn	101	Rgsn Latch1 Time	102
		Rgsn In 0 Filter	91	Rgsn Latch2 Cfg	103	Rgsn Latch2 Psn	104	Rgsn Latch2 Time	105
		Rgsn In 1 Filter	92	Rgsn Latch3 Cfg	106	Rgsn Latch3 Psn	107	Rgsn Latch3 Time	108
		Rgsn Hmln Filter	93	Rgsn Latch4 Cfg	109	Rgsn Latch4 Psn	110	Rgsn Latch4 Time	111
		Rgsn Sts	94	Rgsn Latch5 Cfg	112	Rgsn Latch5 Psn	113	Rgsn Latch5 Time	114
				Rgsn Latch6 Cfg	115	Rgsn Latch6 Psn	116	Rgsn Latch6 Time	117
				Rgsn Latch7 Cfg	118	Rgsn Latch7 Psn	119	Rgsn Latch7 Time	120
				Rgsn Latch8 Cfg	121	Rgsn Latch8 Psn	122	Rgsn Latch8 Time	123
				Rgsn Latch9 Cfg	124	Rgsn Latch9 Psn	125	Rgsn Latch9 Time	126
				Rgsn Latch10 Cfg	127	Rgsn Latch10 Psn	128	Rgsn Latch10 Time	129

Safe Speed Monitor Module

Parameter descriptions begin on page 299.

File	Group	Parameters							
Safe Speed Monitor Host Groups 	Security	Password	1	Reset Defaults	7	Password Command	17	Config Flt Code	70
		Lock State	5	Signature ID	10	Security Code	18		
		Operating Mode	6	New Password	13	Vendor Password	19		
	General	Cascaded Config	20	Reset Type	22	SS Out Mode	72		
		Safety Mode	21	OverSpd Response	24	SLS Out Mode	73		
	Feedback	Fbk Mode	27	Fbk 1 Type	28	Fbk 2 Units	34	Fbk Speed Ratio	39
				Fbk 1 Units	29	Fbk 2 Polarity	35	Fbk Speed Tol	40
				Fbk 1 Polarity	30	Fbk 2 Resolution	36	Fbk Pos Tol	41
				Fbk 1 Resolution	31	Fbk 2 Volt Mon	37	Direction Mon	42
				Fbk 1 Volt Mon	32	Fbk 2 Speed	38	Direction Tol	43
				Fbk 1 Speed	33				
	Stop	Safe Stop Input	44	Stop Mon Delay	46	Standstill Speed	48	Decel Ref Speed	50
		Safe Stop Type	45	Max Stop Time	47	Standstill Pos	49	Stop Decel Tol	51
	Limited Speed	Lim Speed Input	52	Enable SW Input	54	Safe Speed Limit	55	Speed Hysteresis	56
		LimSpd Mon Delay	53						
	Door Control	Door Out Type	57	DM Input	58	Lock Mon Enable	59	Door Out Mode	74
						Lock Mon Input	60		
	Max Speed	Max Speed Enable	61	Max Spd Stop Typ	63	Safe Accel Limit	65		
		Safe Max Speed	62	Max Accel Enable	64	Max Acc Stop Typ	66		
	Faults	Fault Status	67	Config Flt Code	70	SS Out Mode	72		
		Guard Status	68			SLS Out Mode	73		
		IO Diag Status	69			Door Out Mode	74		

Notes:

Drive Port 0 Parameters

This chapter lists and describes the PowerFlex 750-Series Port 0 drive parameters. The parameters can be programmed (viewed/edited) using a Human Interface Module (HIM). Refer to the PowerFlex 20-HIM-A6 and 20-HIM-C6S HIM (Human Interface Module) User Manual, publication 20HIM-UM001, for information on using the HIM to view and edit parameters. As an alternative, programming can also be performed using DriveTools™ software and a personal computer.

Parameter File	Page
Drive (Port 0) Monitor File	54
Drive (Port 0) Motor Control File	56
Drive (Port 0) Feedback & I/O File	70
Drive (Port 0) Cfg File	86
Drive (Port 0) Protection File	102
Drive (Port 0) Speed Control File	117
Drive (Port 0) Torque Control File	132
Drive (Port 0) Position Control File	139
Drive (Port 0) Communication File	154
Drive (Port 0) Diagnostics File	161
Drive (Port 0) Applications File	180

Drive (Port 0) Monitor File

File	Group	No.	Display Name Full Name Description	Values		Read-Write	Data Type
MONITOR	Metering	1	**Output Frequency** Output Frequency Output frequency present at terminals T1, T2, and T3 (U, V & W)	Units: Default: Min/Max:	Hz 0.00 –/+650.00	RO	Real
		2	**Commanded SpdRef** Commanded Speed Reference Value of the active Speed/Frequency Reference. Displayed in Hz or RPM, depending on the value of P300 [Speed Units].	Units: Default: Min/Max:	Hz RPM 0.00 –/+P27 [Motor NP Hertz] x 8 –/+P28 [Motor NP RPM] x 8	RO	Real
		3	**Mtr Vel Fdbk** Motor Velocity Feedback Estimated or actual motor speed, with feedback. Displayed in Hz or RPM, depending on the value of P300 [Speed Units].	Units: Default: Min/Max:	Hz RPM 0.00 –/+P27 [Motor NP Hertz] x 8 –/+P28 [Motor NP RPM] x 8	RO	Real
		4	**Commanded Trq** Commanded Torque External torque regulation reference. Summation of Torque A Select Reference and Torque B Select Reference. Percent of motor rated torque. See Figure 21 on page 393 or Figure 61 on page 436.	Units: Default: Min/Max:	% 0.00 –/+800.00	RO	Real
		5	**Torque Cur Fdbk** Torque Current Feedback Based on the motor, the amount of current that is in phase with the fundamental voltage component.	Units: Default: Min/Max:	Amps Based on Drive Rating –/+P21 [Rated Amps] x 2	RO	Real
		6	**Flux Cur Fdbk** Flux Current Feedback Amount of current that is out of phase with the fundamental voltage component.	Units: Default: Min/Max:	Amps Based on Drive Rating –/+P21 [Rated Amps] x 2	RO	Real
		7	**Output Current** Output Current The total output current present at terminals T1, T2, and T3 (U, V & W).	Units: Default: Min/Max:	Amps Based on Drive Rating 0.00 / P21 [Rated Amps] x 2	RO	Real
		8	**Output Voltage** Output Voltage Output voltage present at terminals T1, T2, and T3 (U, V & W).	Units: Default: Min/Max:	V AC Based on Drive Rating 0.00 / P20 [Rated Volts] x 1.15	RO	Real
		9	**Output Power** Output Power Output power present at terminals T1, T2, and T3 (U, V & W).	Units: Default: Min/Max:	kW 0.00 0.00 / 3000.00	RO	Real
		10	**Output Powr Fctr** Output Power Factor Output power factor.	Default: Min/Max:	0.00 0.00 / 1.00	RO	Real
		11	**DC Bus Volts** Direct Current Bus Volts DC bus voltage.	Units: Default: Min/Max:	V DC Based on Drive Rating 0.00 / P20 [Rated Volts] x 2	RO	Real
		12	**DC Bus Memory** Direct Current Bus Memory A six-minute average of P11 [DC Bus Volts] used to estimate the DC equivalent of the input voltage. Automatically initialized upon power-up or precharge, continually updated during normal operation, and is used to trigger a power loss condition. Use P464 [DC Bus Mem Reset] to reset this parameter.	Units: Default: Min/Max:	V DC Based on Drive Rating 0.00 / P20 [Rated Volts] x 2	RO	Real
		13	**Elapsed MWH** Elapsed Megawatt Hour Accumulated output energy of the drive. Use P336 [Reset Meters] to reset this parameter.	Units: Default: Min/Max:	MWh 0.000 0.000 / 4294967296.000	RO	Real

File	Group	No.	Display Name Full Name Description	Values		Read-Write	Data Type
MONITOR	Metering	14	**Elapsed kWH** Elapsed Kilowatt Hour Accumulated output energy of the drive. Use P336 [Reset Meters] to reset this parameter.	Units: Default: Min/Max:	kWh 0.000 0.000 / 4294967296.000	RO	Real
		15	**Elapsed Run Time** Elapsed Run Time Accumulated time drive is outputting power. Use P336 [Reset Meters] to reset this parameter.	Units: Default: Min/Max:	Hrs 0.000 0.000 / 220000000.000	RO	Real
		16	**Elpsd Mtr MWHrs** Elapsed Motor Megawatt Hours Accumulated output energy to the motor.	Units: Default: Min/Max:	MWh 0.0 0.0 / 220000000.0	RO	Real
		17	**Elpsd Rgn MWHrs** Elapsed Regenerated Motor Megawatt Hours Accumulated input energy from the motor.	Units: Default: Min/Max:	MWh 0.0 0.0 / 220000000.0	RO	Real
		18	**Elpsd Mtr kWHrs** Elapsed Motor Kilowatt Hours Accumulated output energy to the motor.	Units: Default: Min/Max:	kWh 0.0000 0.0000 / 220000000.0000	RO	Real
		19	**Elpsd Rgn kWHrs** Elapsed Regenerated Motor Kilowatt Hours Accumulated input energy from the motor.	Units: Default: Min/Max:	kWh 0.0000 0.0000 / 220000000.0000	RO	Real
		303	**Fdbk Filter Cfg** Feedback Filter Configuration			RW	16-bit Integer

Configures the filtering on the following parameters. With the bit off the current filtering is used. With the bit on the unfiltered feedback will be used for the parameter.

Options	Reserved	Reserved	Reserved	Reserved	Reserved	Reserved	Reserved	Reserved	Reserved	Reserved	Reserved	Reserved	UnFltFlxCurr	UnFltTrqCurr	UnFltOutCurr	UnFltDcBus V
Default	0	0	0	0	0	0	0	0	0	0	0	0	0	0	0	0
Bit	15	14	13	12	11	10	9	8	7	6	5	4	3	2	1	0

0 = Condition False
1 = Condition True

Bit 0 - UnFltDcBus V
Bit 1 - UnFltOutCurr
Bit 2 - UnFltTrqCurr
Bit 3 - UnFltFlxCurr
Bit 4 ... 15 - Reserved

File	Group	No.	Display Name Full Name Description	Values		Read-Write	Data Type
	Drive Data	20	**Rated Volts** Rated Voltage Input voltage class (208, 240, 400 etc.) of the drive. This value may change depending on the setting of parameters 305 [Voltage Class] or 306 [Duty Rating].	Units: Default: Min/Max:	V AC Based on Drive Rating 0.00 / 690.00	RO	Real
		21	**Rated Amps** Rated Amperage Continuous current rating of drive. This value may change depending on the setting of parameters 305 [Voltage Class] or 306 [Duty Rating].	Units: Default: Min/Max:	Amps Based on Drive Rating 0.00 / Dependent on Frame Rating	RO	Real
		22	**Rated kW** Rated Kilowatts Continuous power rating of drive.	Units: Default: Min/Max:	kW Based on Drive Rating 0.00 / Dependent on Frame Rating	RO	Real

Drive (Port 0) Motor Control File

File	Group	No.	Display Name Full Name Description	Values		Read-Write	Data Type
MOTOR CONTROL	Motor Data	25	**Motor NP Volts** Motor Nameplate Volts Rated volts shown on the motor nameplate.	Units: Default: Min/Max:	V AC Based on Drive Rating and Voltage Class 0.10 x P25 [Motor NP Volts] / Based on Drive Rating and Voltage Class	RW	Real
		26	**Motor NP Amps** Motor Nameplate Amps Rated full load amps shown on the motor nameplate.	Units: Default: Min/Max:	Amps Based on Drive Rating 0.01 x P21 [Rated Amps] / 14200.00	RW	Real
		27	**Motor NP Hertz** Motor Nameplate Hertz Rated frequency shown on the motor nameplate.	Units: Default: Min/Max:	Hz Based on Drive Rating 2.00 / 650.00	RW	Real
		28	**Motor NP RPM** Motor Nameplate Revolutions Per Minute Rated RPM shown on the motor nameplate. Note: The value of this parameter must reflect the slip speed of the motor. For example, for a 60 Hz, 4 pole motor, a value of 1800 is synchronous speed, and 1750 is slip speed.	Units: Default: Min/Max:	RPM Based on Drive Rating 1.0 / 40000.0	RW	Real
		29	**Mtr NP Pwr Units** Motor Nameplate Power Units Power units shown on the motor nameplate.	Default: Options:	Based on Drive Rating 0 – HP 1 – kW	RW	32-bit Integer
		30	**Motor NP Power** Motor Nameplate Power Rated power shown on the motor nameplate.	Units: Default: Min/Max:	HP (P29 = 0) kW (P29 = 1) Based on Drive Rating 0.01 / 2000.00	RW	Real
		31	**Motor Poles** Motor Poles Number of poles in the motor. $\text{Poles} = \frac{120 \times [\text{Motor NP Hertz}]}{[\text{Motor NP RPM}]}$	Units: Default: Min/Max:	Pole 4 2 / 200	RW	32-bit Integer

File	Group	No.	Display Name Full Name Description	Values		Read-Write	Data Type
MOTOR CONTROL	Mtr Ctrl Options	35	**Motor Ctrl Mode** Motor Control Mode Motor type and motor control mode. InductionVHz (0) – Induction motor, volts per Hertz control mode. **Note:** When using the Induction VHz (0) motor control mode, see the diagram for voltage and frequency in the Volts per Hertz group on page 62 for additional detail on the drive programming. Induction SV (1) – Induction motor, sensorless vector control mode. Induct Econ (2) – Induction motor, economize control mode. Induction FV (3) – Induction motor, flux vector control mode. PM VHz (4) – Permanent magnet motor, volts per Hertz control mode. PM SV (5) – Permanent magnet motor, sensorless vector control mode. PM FV (6) – Permanent magnet motor, flux vector control mode. SyncRel VHz (7) – Synchronous Reluctance motor, volts per Hertz control mode. SyncRel SV (8) – Synchronous Reluctance motor, sensorless vector control mode. Adj VltgMode (9) – Adjustable voltage control mode. IPM FV (10) – Interior permanent magnet motor, flux vector control mode.	Default: Options:	1 – Induction SV 0 – InductionVHz 1 – Induction SV 2 – Induct Econ 3 – Induction FV 4 – PM VHz 755 (1) 5 – PM SV 755 (1) 6 – PM FV 755 (1) 7 – SyncRel VHz 8 – SyncRel SV 9 – Adj VltgMode (2) 10 – IPM FV (1) See the table in P80 [PM Cfg] on page 64. For permanent magnet motors see Motor Name Plate and Rating Specifications table in Appendix E for motor data. (2) In the Adjustable control voltage mode, verify that P40 [Mtr Option Cfg] Bit 15 = 0 and P36 [Maximum Voltage] and 37 [Maximum Freq] ≠ 0.	RW	32-bit Integer
		36	**Maximum Voltage** Maximum Voltage The highest voltage the drive will output.	Units: Default: Min/Max:	V AC Based on Drive Rating and Voltage Class Based on Drive Rating and Voltage Class	RW	Real
		37	**Maximum Freq** Maximum Frequency Determines the frequency where voltage limiting begins. Voltage limiting is either the corresponding voltage from the curve or the value of parameter 36 [Maximum Voltage]. Only active when parameter 35 [Motor Ctrl Mode] is set to 0 "InductionVHz." 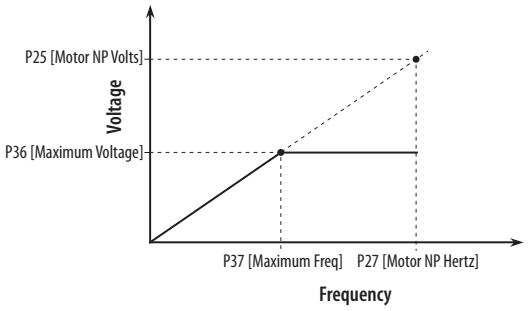 	Units: Default: Min/Max:	Hz Based on P27 [Motor NP Hertz] / P28 [Motor NP RPM] and Voltage Class 0.00016667 x P27 [Motor NP Hertz] / 650.00	RW	Real
		38	**PWM Frequency** Pulse Width Modulation Frequency Pulse Width Modulated frequency (power transistor switching frequency). Drive derating may occur with increased values. See the PowerFlex 750-Series AC Drive Technical Data, publication 750-TD001, for derating guidelines.	Units: Default: Min/Max:	kHz Based on Drive Rating Based on Drive Rating	RW	Real

File	Group	No.	Display Name Full Name Description	Values	Read-Write	Data Type
MOTOR CONTROL	Mtr Ctrl Options	40	**Mtr Options Cfg** Motor Options Configuration Configuration of motor control-related functions. For motors above 200 Hz, a carrier frequency of 8 kHz or higher is recommended. Consider drive derate and motor lead distance restrictions.		RW	32-bit Integer

Options	Reserved	Reserved	Reserved	Reserved	Reserved	Reserved	Reserved	Reserved	Reserved	Reserved	Reserved	Reserved	Reserved	Reserved	Reserved	Reserved	Jerk Select	Not Used	Common Mode	Xsistor Diag (1)	Elect Stab	DB WhileStop	PWM FreqLock	AsyncPWMLock	PWM Type Sel	RS Adaption	Reflect Wave	Mtr Lead Rev	EnclsTrqProv (2)	Trq ModeJog	Trq ModeStop	Zero TrqStop
Default	0	0	0	0	0	0	0	0	0	0	0	0	0	0	0	0	1	0	0	1	1	0	0	0	1	1	1	0	0	1	1	1
Bit	32	30	29	28	27	26	25	24	23	22	21	20	19	18	17	16	15	14	13	12	11	10	9	8	7	6	5	4	3	2	1	0

(1) 753 drive default is 1 = Enabled.
755 drive default is 0 = Disabled.

(2) 755 drives only.

Bit 0 "Zero TrqStop" – Configures stopped condition when in torque mode. 0 = wait for zero speed before shutting off drive output, 1 = wait for zero torque before shutting off drive output.

Bit 1 "Trq ModeStop" – Configures stopping behavior when in torque mode. 0 = remain in torque mode, 1 = switch to speed mode

Bit 2 "Trq ModeJog" – Configures jogging behavior when in torque mode. 0 = remain in torque mode, 1 = switch to speed mode

Bit 3 "EnclsTrqProv" – Enables encoderless mode when using the torque prove function. 0 = Disabled, 1 = Enabled. Bits 0 and 1 of P1100 [Trq Prove Cfg] must also be set to use this mode.

Bit 4 "Mtr Lead Rev" – Reverses the phase rotation of the applied voltage, effectively reversing the motor leads. 0 = Not Reversed, 1 = Reversed

Bit 5 "Reflect Wave" – Enables reflected wave voltage protection for long motor cables. 0 = Disabled, 1 = Enabled

Bit 6 "RS Adaption" – Adapts for changes in motor stator resistance due to motor temperature. Active only in FV motor control mode with feedback. 0 = Disabled, 1 = Enabled

Bit 7 "PWM Type Sel" – Configures 3 Phase / 2 Phase switching of the power devices. 0 = 3 Phase modulation with auto switchover to 2 phase modulation. 1 = Full time 3 phase modulation (no switchover)

Bit 8 "AsyncPWMLock" – Configures Synchronous / Asynchronous switching of the power devices. 0 = Automatically changes between synchronous and asynchronous. 1 = Asynchronous switching only.

Bit 9 "PWM FreqLock" – Configures switching frequency of the power devices while in FV motor control mode without feedback. 0 = switching frequency automatically reduces to 2 kHz at low speeds (best performance), 1 = switching frequency does not reduce (setting used when switching frequency reduction is undesirable)

Bit 10 "DB WhileStop" – Enables operation of the dynamic brake transistor while the drive is stopped. 0 = Disabled, 1 = Enabled

Bit 11 "Elect Stab" – Enables stability control for Sensorless Vector and V/Hz motor control modes. 0 = Disabled, 1 = Enabled

Bit 12 "Xsistor Diag" – Enables power transistor diagnostic test at each start command. Recommended to set to Disabled if an output filter is installed with the drive. Refer to publication PFLEX-AT002 for additional information. 0 = Disabled, 1 = Enabled

Bit 13 "Common Mode" – Enables the common mode reduction feature. See Parameter 41, Common Mode Type, for common mode type selection.

Bit 15 "Jerk Select" – Limits the rate of change to the velocity reference for improved current limiting. This setting applies only to Sensorless Vector and V/Hz motor control modes. 0 = Disabled (0.0 second ramp time achievable), 1 = Enabled (0.0 second ramp time prevented)

		41	**Common Mode Type** Common Mode Type CMV (0) – Reduces common mode voltage that degrades motor bearings and corrupts signals in control systems. It produces high DC bus ripple and reduces DC bus capacitor life. CMI (1) – Reduces common mode current within the drive that helps reduce the stress on the power components when the jumpers are disconnected on a solidly grounded network.	Default: Options:	0 – CMV 0 – CMV 1 – CMI	RW	32-bit Integer

File	Group	No.	Display Name Full Name Description	Values		Read-Write	Data Type
MOTOR CONTROL	Mtr Ctrl Options	42	**Bus Utilization** Bus Utilization The maximum allowed bus voltage utilization for the Motor Control. Do not change this value without consulting Technical Support. Higher values may result in control instability or over-current faults.	Units: Default: Min/Max:	% 95.00 85.00 / 100.00	RW	Real
		43	**Flux Up Enable** Flux Up Enable Manual (0) – Flux is established for P44 [Flux Up Time] before initial acceleration. Automatic (1) – Flux is established for a calculated time period based on motor nameplate data before acceleration. P44 [Flux Up Time] is not used.	Default: Options:	1 – Automatic 0 – Manual 1 – Automatic	RW	32-bit Integer
		44	**Flux Up Time** Flux Up Time The amount of time the drive will use to try to achieve full motor stator flux. When a Start command is issued, DC current at P26 [Motor NP Amps] level is used to build stator flux before accelerating. This parameter cannot be changed unless P43 [Flux Up Enable] is set to 0 "Manual."	Units: Default: Min/Max:	Secs 0.0000 0.0000 / 5.0000	RW	Real
		45	**Flux Down Ki** Flux Down Ki The integral term used in the voltage regulator which controls the removal of flux in the motor. Refer to the PowerFlex 750-Series AC Drives Installation Instructions, publication 750-IN001, for jumper locations and positions.	Default: Min/Max:	0.20 0.00 / 100.00	RW	Real
		46	**Flux Down Kp** Flux Down Kp The proportional term used in the voltage regulator which controls the removal of flux in the motor.	Default: Min/Max:	150.0 0.0 / 10000.0	RW	Real
		47	**Econ At Ref Ki** Economize At Reference Ki Integral gain that determines the response of the output voltage when P35 [Motor Ctrl Mode] option 2 "Induct Econ" is selected and the output frequency is at its reference.	Default: Min/Max:	305.0 0.0 / 100000.0	RW	Real
		48	**Econ AccDec Ki** Economize Acceleration/Deceleration Ki Integral gain that determines the response of the output voltage when P35 [Motor Ctrl Mode] option 2 "Induct Econ" is selected and the output frequency is either accelerating or decelerating to a reference.	Default: Min/Max:	200.0 0.0 / 100000.0	RW	Real
		49	**Econ AccDec Kp** Economize Acceleration/Deceleration Kp Proportional gain that determines the response of the output voltage when P35 [Motor Ctrl Mode] option 2 "Induct Econ" is selected and the output frequency is either accelerating or decelerating to a reference.	Units: Default: Min/Max:	V/A 100.0 0.0 / 1000000.0	RW	Real
		50	**Stability Filter** Stability Filter The filter time constant for the angle and voltage stability control.	Units: Default: Min/Max:	Secs 5162.22 0.00 / 1000000.00	RW	Real
		51	**Stab Volt Gain** Stability Voltage Gain The gain of the voltage stability control function. Active in all modes **except** when any FV motor control mode is selected in P35 [Motor Ctrl Mode] with speed feedback.	Default: Min/Max:	5322.22 0.00 / 10000000.00	RW	Real
		52	**Stab Angle Gain** Stability Angle Gain The gain of the electrical angle stability control function. Active in all modes **except** when any FV motor control mode is selected in P35 [Motor Ctrl Mode] with speed feedback.	Default: Min/Max:	790.43 0.00 / 10000000.00	RW	Real

File	Group	No.	Display Name Full Name Description	Values		Read-Write	Data Type
MOTOR CONTROL	Mtr Ctrl Options	1648	**IPM V FB HP Filt** IPM Voltage Feedback High Pass Filter High Pass Filter setting for the High Speed angle control. **Note:** This parameter is not used by Frame 8 drives and larger.	Default: Min/Max:	15.0 1.0 / 50.0	RW	Real
		1649	**IPM SpdEst Filt** IPM Speed Estimator Filter Bandwidth (BW) setting for the Speed Estimator filter. **Note:** This parameter is not used by Frame 8 drives and larger.	Units: Default: Min/Max:	R/S 1000.0 1.0 / 9999.9	RW	Real
		1650	**IPM SpdEst Kp** IPM Speed Estimator Kp Kp tuning value for the Speed Estimator. **Note:** This parameter is not used by Frame 8 drives and larger.	Default: Min/Max:	30.0 0.0 / 1000.0	RW	Real
		1651	**IPM SpdEst Ki** IPM Speed Estimator Ki Ki tuning value for the Speed Estimator. **Note:** This parameter is not used by Frame 8 drives and larger.	Default: Min/Max:	2500.0 0.0 / 25000.0	RW	Real
		1652	**IPM SpdEst KiAdj** IPM Speed Estimator Ki Adjust Step size used to adjust the Ki value of the Speed Estimator during no load conditions. **Note:** This parameter is not used by Frame 8 drives and larger.	Default: Min/Max:	75.0 0.0 / 500.0	RW	Real
		1653	**IPM Tran PWM** IPM Transition PWM Transition frequency where the PWM type is changed during deceleration. **Note:** This parameter is not used by Frame 8 drives and larger.	Units: Default: Min/Max:	Hz 8.0 3.0 / 200.0	RW	Real
		1654	**IPMTran PWM Hyst** IPM Transition PWM Hysteresis Hysteresis frequency used with P1653 [IPM Tran PWM] during acceleration. **Note:** This parameter is not used by Frame 8 drives and larger.	Units: Default: Min/Max:	Hz 2.0 0.0 / 50.0	RW	Real
		1655	**IPM Tran Mode** IPM Transition Mode Transition frequency where the control angle is changed during deceleration. **Note:** This parameter is not used by Frame 8 drives and larger.	Units: Default: Min/Max:	Hz 4.0 0.5 / 200.0	RW	Real
		1656	**IPM TranMod Hyst** IPM Transition Mode Hysteresis Hysteresis frequency used with P1655 [IPM Tran Mode] during acceleration. **Note:** This parameter is not used by Frame 8 drives and larger.	Units: Default: Min/Max:	Hz 3.0 0.0 / 50.0	RW	Real
		1657	**IPM Tran Filt Lo** IPM Transition Filter Low Bandwidth (BW) setting for the frequency used for Transition of angle and PWM during acceleration. **Note:** This parameter is not used by Frame 8 drives and larger.	Units: Default: Min/Max:	R/S 35.0 1.0 / 9999.0	RW	Real
		1658	**IPM Tran Filt Hi** IPM Transition Filter High Bandwidth (BW) setting for the frequency used for Transition of angle and PWM during deceleration. **Note:** This parameter is not used by Frame 8 drives and larger.	Units: Default: Min/Max:	R/S 1000.0 1.0 / 9999.0	RW	Real

File	Group	No.	Display Name Full Name Description	Values		Read-Write	Data Type
MOTOR CONTROL	Mtr Ctrl Options	1659	**IPM Tran Angle** IPM Transition Angle Difference Threshold between High and Low angle control to allow transition. **Note:** This parameter is not used by Frame 8 drives and larger.	Units: Default: Min/Max:	Cnts 100.0 5.0 / 500.0	RW	Real
		1660	**IPM Stc OfsTst K** IPM Static Offset Test Constant Reduction factor for Static Offset test pulses. **Note:** This parameter is not used by Frame 8 drives and larger.	Default: Min/Max:	1.00 0.10 / 9.00	RW	Real
		1661	**IPM Lq Cmd BW** IPM Lq Command Bandwidth IqFddk Filter Bandwidth (BW) used to select the Active Lq for the IPM control. **Note:** This parameter is not used by Frame 8 drives and larger.	Units: Default: Min/Max:	R/S 10.0 1.0 / 999.9	RW	Real
		1662	**IPM SpdEst Kp Hi** IPM Speed Estimator Kp High Kp High tuning value for the Speed Estimator at high speed. **Note:** This parameter is not used by Frame 8 drives and larger.	Default: Min/Max:	30.0 0.00 / 5000.0	RW	Real

File	Group	No.	Display Name Full Name Description	Values		Read-Write	Data Type
MOTOR CONTROL	Volts per Hertz	**60**	**Start Acc Boost** Start/Acceleration Boost The voltage boost level for starting and acceleration when a "VHz" mode is selected, according to P35 [Motor Ctrl Mode]. Refer to diagram for P524 [Overspeed Limit].	Units: Default: Min/Max:	V AC Based on Drive Rating 0.00 / Based on Drive Rating and Voltage Class	RW	Real
		61	**Run Boost** Run Boost The boost level for steady state and deceleration when a "VHz" mode is selected, according to P35 [Motor Ctrl Mode]. Refer to diagram for P524 [Overspeed Limit].	Units: Default: Min/Max:	V AC Based on Drive Rating 0.00 / Based on Drive Rating and Voltage Class	RW	Real
		62	**Break Voltage** Break Voltage The voltage the drive will output at P63 [Break Frequency] when a "VHz" mode is selected, according to P35 [Motor Ctrl Mode]. Refer to diagram for P524 [Overspeed Limit].	Units: Default: Min/Max:	V AC Based on Drive Rating and Voltage Class 0.00 / P25 [Motor NP Volts] x 1.5	RW	Real
		63	**Break Frequency** Break Frequency The frequency the drive will output at P62 [Break Voltage] when a "VHz" mode is selected, according to P35 [Motor Ctrl Mode]. Refer to diagram for P524 [Overspeed Limit].	Units: Default: Min/Max:	Hz P27 [Motor NP Hertz] x 0.25 0.00 / P27 [Motor NP Hertz]	RW	Real
			This diagram (with P65 set to Custom V/Hz) depicts the Voltage to Frequency ratio when using the Induction VHz (0) motor control mode. 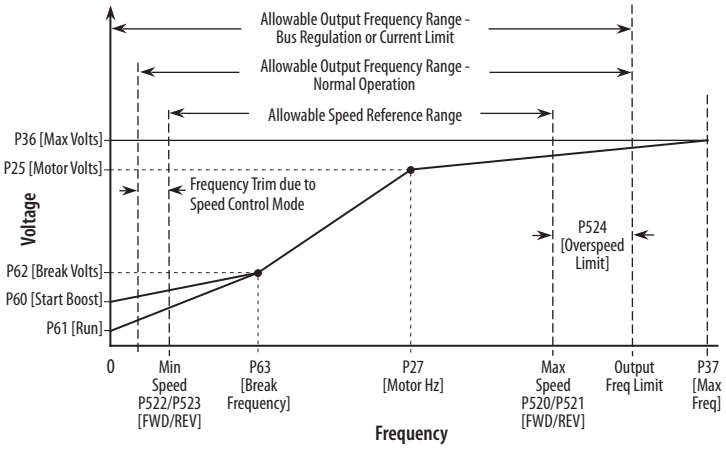 				
		64	**SVC Boost Filter** SVC Boost Filter The voltage boost filter time constant when a "SVC" mode is selected, according to P35 [Motor Ctrl Mode].	Units: Default: Min/Max:	Secs 0.1000 0.0001 / 1000.0000	RW	Real
		65	**VHz Curve** VHz Curve Selects either a predefined curve (for example Fan/Pump), or a custom curve when a "VHz" mode is selected, according to P35 [Motor Ctrl Mode]. Refer to diagram for P524 [Overspeed Limit]. See Motor Control Modes in the PowerFlex 750-Series AC Drives Reference Manual, publication 750-RM002, for more information on the Fan/Pump option.	Default: Options:	0 – Custom V/Hz 0 – Custom V/Hz 1 – Fan/Pump	RW	32-bit Integer

File	Group	No.	Display Name Full Name Description	Values		Read-Write	Data Type
MOTOR CONTROL	Autotune	70	**Autotune** Autotune Provides a manual or automatic method for setting P73 [IR Voltage Drop], P74 [Ixo Voltage Drop] and P75 [Flux Current Ref]. Valid only when parameter P35 [Motor Ctrl Mode] is set to 1 "Induction SV", 2 "Induct Econ", or 3 "Induction FV." Ready (0) – Parameter returns to this setting following a "Static Tune" or "Rotate Tune", at which time another start transition is required to operate the drive in normal mode. It also permits manually setting P73 [IR Voltage Drop], P74 [Ixo Voltage Drop] and P75 [Flux Current Ref]. Calculate (1) – Uses motor nameplate data to automatically set P73 [IR Voltage Drop], P74 [Ixo Voltage Drop], P75 [Flux Current Ref] and P621 [Slip RPM at FLA]. Static Tune (2) – A temporary command that initiates a non-rotational motor stator resistance test for the best possible automatic setting of P73 [IR Voltage Drop] in all valid modes and a non-rotational motor leakage inductance test for the best possible automatic setting of P74 [Ixo Voltage Drop] in a Flux Vector (FV) mode. A start command is required following initiation of this setting. Used when motor cannot be rotated. Rotate Tune (3) – A temporary command that initiates a "Static Tune" followed by a rotational test for the best possible automatic setting of P75 [Flux Current Ref]. In Flux Vector (FV) mode, with encoder feedback, a test for the best possible automatic setting of P621 [Slip RPM at FLA] is also run. A start command is required following initiation of this setting. **Important:** If using rotate tune for a Sensorless Vector (SV) mode, the motor should be uncoupled from the load or results may not be valid. With a Flux Vector (FV) mode, either a coupled or uncoupled load will produce valid results. **ATTENTION:** Rotation of the motor in an undesired direction can occur during this procedure. To guard against possible injury and/or equipment damage, it is recommended that the motor be disconnected from the load before proceeding. Inertia Tune (4) – A temporary command that initiates an inertia test of the motor/load combination. The motor will ramp up and down while the drive measures the amount of inertia. This option only applies to FV modes selected in P35 [Motor Ctrl Mode]. Final test results should be obtained with load coupled to the motor.	Default: Options:	1 – Calculate 0 – Ready 1 – Calculate 2 – Static Tune 3 – Rotate Tune 4 – Inertia Tune	RW	32-bit Integer
		71	**Autotune Torque** Autotune Torque The motor torque applied to the motor during the flux current and inertia tests.	Units: Default: Min/Max:	% 50.00 0.00 / 200.00	RW	Real
		73	**IR Voltage Drop** IR Voltage Drop Value of voltage drop across the resistance of the motor stator at rated motor current. Used only when P35 [Motor Ctrl Mode] is set to 1 "Induction SV", 2 "Induct Econ", or 3 "Induction FV." This parameter cannot be changed unless P70 [Autotune] is set to 0 "Ready."	Units: Default: Min/Max:	Volt Based on Drive Rating 0.00 / Based on Drive Rating and Voltage Class	RW	Real
		74	**Ixo Voltage Drop** Ixo Voltage Drop Value of voltage drop across the leakage inductance of the motor at rated motor current. Used only when P35 [Motor Ctrl Mode] is set to 3 "Induction FV." This parameter cannot be changed unless P70 [Autotune] is set to 0 "Ready."	Units: Default: Min/Max:	V AC Based on Drive Rating and Voltage Class 0.00 / P25 [Motor NP Volts]	RW	Real
		75	**Flux Current Ref** Flux Current Reference Value of amps for full motor flux. This parameter cannot be changed unless P70 [Autotune] is set to 0 "Ready."	Units: Default: Min/Max:	Amps P21 [Rated Amps] x 0.35 0.00 / P21 [Rated Amps] x 0.995	RW	Real
		76	**Total Inertia** Total Inertia Time in seconds for a motor coupled to a load to accelerate from zero to base speed at rated motor torque. Calculated during auto-tune. Only use this parameter when P35 [Motor Ctrl Mode] is set to 3 "Induction FV."	Units: Default: Min/Max:	Secs 2.00 0.01 / 600.00	RW	Real

File	Group	No.	Display Name Full Name Description	Values		Read-Write	Data Type
MOTOR CONTROL	Autotune	77	**Inertia Test Lmt** Inertia Test Limit Maximum number of revolutions the motor rotates during the Inertia AutoTune test. When the value is zero, the limit is not active.	Units: Default: Min/Max:	Revs 0.0 0.0 / 65535.0	RW	Real
		78	**EncdrIss AngComp** Encoderless Angle Compensation Represents electrical angle compensation dependent on motor cable and PWM Frequency. Determined during autotuning when P35 [Motor Ctrl Mode] is set to one of the FV modes without speed feedback.	Units: Default: Min/Max:	Rad 0.0000 –/+6.2831	RW	Real
		79	**EncdrIss VltComp** Encoderless Voltage Compensation Represents voltage compensation dependent on motor cable and PWM Frequency. Determined during autotuning when P35 [Motor Ctrl Mode] is set to one of the FV modes without speed feedback.	Units: Default: Min/Max:	V AC Based on Drive Rating 0.00 / Based on Drive Rating and Voltage Class	RW	Real
		80	**PM Cfg** Permanent Magnet Motor Configuration			RW	16-bit Integer

Mode	Bit 0	Bit 1	Bit 2	Bit 3	Bit 4	Bit 5	Bit 6	Bit 7
PM with Absolute Feedback (Stegmann, SSI, Heidenhaim)		X						
PM with Incremental Encoder (Pulse, SIN/COS)	X	X						
PM without Feedback		X	X	X				
IPM with Absolute Feedback (Stegmann, SSI, Heidenhaim)						X		
IPM with Incremental Encoder (Pulse, SIN/COS)	X					X		
IPM without Feedback			X			X		

X = 1

This parameter also includes two options for PM FV mode selected by P35 [Motor Ctrl Mode].

Options	Reserved	Reserved	Reserved	Reserved	Reserved	Reserved	NoMiLimit	NoIntgHld	IdsCmdFFwdEn[1]	VCmdPhShftEn	IPMTqTrmEn	IPM Vqs Disa	PMStabAnglEn	StaticTestEn	Vqs Reg En	AutoOfstTest
Default	0	0	0	0	0	0	0	0	1	0	0	0	0	0	0	0
Bit	15	14	13	12	11	10	9	8	7	6	5	4	3	2	1	0

0 = Disable
1 = Enable

(1) 755 drives only.

Bit 0 "AutoOfstTest" – Enables the PM Offset test to be executed before the drive runs normally after a power cycle or drive reset. Required when the feedback device is not an absolute feedback device. Cannot be enabled if Bit 2 is enabled. Allow for up to 90° of shaft rotation. The value set in P83 [PM Ofst Tst Cur] may need to be increased to complete the test. If shaft rotation is not possible, set Bits 0 and 1 to perform a static test at every start.

Bit 1 "Vqs Reg En" – Enables the Vqs regulator.

Bit 2 "StaticTestEn" – Enables the Static test to be executed before the drive starts. Cannot be enabled if Bit 0 is enabled.

Bit 3 "PMStabAnglEn" – Enables the Permanent Magnet Stability Angle regulator. Used for PM FV Encoderless when P35 [Motor Ctrl Mode] = 6 "PM FV" and P125 [Pri Vel Fdbk Sel] = Open Loop.

Bit 4 "IPM Vqs Disa" – Disables Vqs regulator when P35 [Motor Ctrl Mode] = 10 "IPM FV."

Bit 5 "IPMTqTrmEn" – Enables Torque Trim when P35 [Motor Ctrl Mode] = 10 "IPM FV."

Bit 6 "VCmdPhShftEn" – Enables the enhancement function on the voltage command calculation in all control modes.

Bit 7 "IdsCmdFFwdEn" – Enables the feed forward term calculation for the Vqs regulator in PM with feedback mode.

Bit 8 "NoIntgHld" – This bit defines behavior of the d-q current regulator integrators. When set, the integrators will not be held during over modulation; when not set, the integrators will be held during over modulation.

Bit 9 "NoMiLimit" – When not set, modulation index will be limited based on bus utilization, when set, modulation index will not be limited.

		81	**PM PriEnc Offset** Permanent Magnet Motor Primary Encoder Offset The amount of offset between the primary feedback encoder counts, and the rotor flux center position of the PM motor. A value of 1024 is equal to 360 electrical degrees. This parameter is updated during the PM Offset test which runs at the first start after a power cycle/ system reset (P80 [PM Cfg] Bit 0 = 1) and during autotune in PM FV mode.	Default: Min/Max:	0 0 / 1023	RW	32-bit Integer

File	Group	No.	Display Name Full Name Description	Values		Read-Write	Data Type
MOTOR CONTROL	Autotune	82	**PM AltEnc Offset** Permanent Magnet Motor Alternate Encoder Offset The amount of offset between the alternate feedback encoder counts, and the rotor flux center position of the PM motor. A value of 1024 is equal to 360 electrical degrees. This parameter is updated during the PM Offset test which runs at the first start after a power cycle/ system reset (P80 [PM Cfg] Bit 0 = 1) and during autotune in PM FV mode. Active only when Alternate Velocity Feedback is being used during Automatic Tach Switchover (see P635 [Spd Options Ctrl]).	Default: Min/Max:	0 0 / 1023	RW	32-bit Integer
		83	**PM OfstTst Cur** Permanent Magnet Motor Offset Test Current Amplitude of the current command in percent of the motor rated current during the PM Offset Test, which is one of the auto tune tests in PM FV mode.	Units: Default: Min/Max:	% 40.00 0.00 / 200.00	RW	Real
		84	**PM OfstTst CRamp** Permanent Magnet Motor Offset Test Current Ramp Ramp time of the current command during the PM Offset Test in PM FV mode, which is defined as ramp time to reach the P80 [PM Cfg] current command amplitude.	Units: Default: Min/Max:	Secs 3.00 0.00 / 100.00	RW	Real
		85	**PM OfstTst FRamp** Permanent Magnet Motor Offset Test Frequency Ramp Defines the frequency ramp time of the current command during the PM Offset Test in PM FV mode, which is defined as ramp time in seconds from 0 to 3 Hz.	Units: Default: Min/Max:	Secs 60.00 0.00 / 1000.00	RW	Real
		86	**PM CEMF Voltage** Permanent Magnet Motor Counter Electro Motive Force Counter electromotive force (CEMF) voltage displayed in line-to-line rms value, which is normalized to the base motor speed. Updated after the completion of the auto tune in PM FV mode.	Units: Default: Min/Max:	Volt P25 [Motor NP Volts] x 0.0675 0.00 / P25 [Motor NP Volts] x 1.5	RW	Real
		87	**PM IR Voltage** Permanent Magnet Motor Stator Voltage Drop Voltage across the stator resistance of the PM motor at the rated motor current displayed in line-to-line rms value. Updated after the completion of the auto tune in PM FV mode.	Units: Default: Min/Max:	Volt Based on Drive Rating 0.00 / Based on Drive Rating and Voltage Class	RW	Real
		88	755 **PM IXq Voltage** Permanent Magnet Motor Q-Axis Stator Inductance Voltage Drop Voltage across the q-axis stator inductance of the PM motor at the rated motor current and the rated motor frequency displayed in line-to-line rms value. This parameter is updated after the completion of the auto tune in PM FV mode.	Units: Default: Min/Max:	Volt P25 [Motor NP Volts] x 0.0435 0.00 / P25 [Motor NP Volts] x 1.5	RW	Real
		89	755 **PM IXd Voltage** Permanent Magnet Motor D-Axis Stator Inductance Voltage Drop Voltage across the d-axis stator inductance of the PM motor at the rated motor current and the rated motor frequency displayed in line-to-line rms value. Updated after the completion of the auto tune in PM FV mode.	Units: Default: Min/Max:	Volt P25 [Motor NP Volts] x 0.0435 0.00 / P25 [Motor NP Volts] x 1.5	RW	Real
		91	**PM Vqs Reg Kp** Permanent Magnet Motor Vqs Regulator Proportional Gain Proportional gain of the vqs regulator in PM FV mode. When P80 [PM Cfg] Bit 1 = 1, the vqs regulator will be active either when the motor voltage exceeds the voltage limited by the DC bus voltage or when the motor voltage exceeds the value set by P36 [Maximum Voltage].	Default: Min/Max:	2.50 0.00 / 1000.00	RW	Real
		92	**PM Vqs Reg Ki** Permanent Magnet Motor Vqs Regulator Integral Gain Integral gain of the vqs regulator in PM FV mode.	Default: Min/Max:	0.50 0.00 / 1000.00	RW	Real
		93	**PM Dir Test Cur** Permanent Magnet Motor Direction Test Current Amount of current commanded during the direction test when P35 [Motor Ctrl Mode] option 6 "PM FV" is selected. When the Start-Up feature is used, this value is automatically set to 10% of the motor rated current.	Units: Default: Min/Max:	Amps P26 [Motor NP Amps]/10 0.00 / P26 [Motor NP Amps]	RW	Real

File	Group	No.	Display Name Full Name Description	Values		Read-Write	Data Type
MOTOR CONTROL	Autotune	120	755 **PM IXqVoltage125** Permanent Magnet Motor Q-Axis Stator Inductance Voltage Drop 125% Voltage across the q-axis stator inductance of the PM motor at 125% rated motor current and the rated motor frequency displayed in line-to-line rms value. This parameter is updated after the completion of the auto tune in PM FV mode.	Units: Default: Min/Max:	Volt P25 [Motor NP Volts] x 0.0435 0.0000 / P25 [Motor NP Volts] x 1.5	RW	Real
		1630	**IPM_Lq_25_pct** Lq for 25% Iq IPM Control Sets Lq at 25% current.	Units: Default: Min/Max:	mH 0.00 0.00 / 999990.00	RW	Real
		1631	**IPM_Lq_50_pct** Lq for 50% Iq IPM Control Sets Lq at 50% current.	Units: Default: Min/Max:	mH 0.00 0.00 / 999990.00	RW	Real
		1632	**IPM_Lq_75_pct** Lq for 75% Iq IPM Control Sets Lq at 75% current.	Units: Default: Min/Max:	mH 0.00 0.00 / 999990.00	RW	Real
		1633	**IPM_Lq_100_pct** Lq for 100% Iq IPM Control Sets Lq at 100% current.	Units: Default: Min/Max:	mH 0.00 0.00 / 999990.00	RW	Real
		1634	**IPM_Lq_125_pct** Lq for 125% Iq IPM Control Sets Lq at 125% current.	Units: Default: Min/Max:	mH 0.00 0.00 / 999990.00	RW	Real
		1635	**IPM_Ld_0_pct** Ld for 0% Id IPM Control Sets Ld at 0% current.	Units: Default: Min/Max:	mH 0.00 0.00 / 999990.00	RW	Real
		1636	**IPM_Ld_100_pct** Ld for 100% Id IPM Control Sets Ld at 100% current.	Units: Default: Min/Max:	mH 0.00 0.00 / 999990.00	RW	Real
		1646	**IPM PriOffstComp** IPM Primary Encoder Offset Compensation Primary Offset Compensation, AutoTune group.	Default: Min/Max:	0 0 / 512	RW	Real
		1647	**IPM AltOffstComp** IPM Alternate Encoder Offset Compensation Alternate Offset Compensation, AutoTune group.	Default: Min/Max:	0 0 / 512	RW	Real

File	Group	No.	Display Name Full Name Description	Values		Read-Write	Data Type
MOTOR CONTROL	Vector Regulator	95	**VCL Cur Reg BW** Vector Closed Loop Current Regulator Bandwidth Sets the bandwidth of the current regulator by automatically adjusting the gains (P96 and P97) based on motor autotune results. When the value of bandwidth is zero (default) the current regulator gains can be manually adjusted. The default values for P95, P96, and P97 typically provide excellent performance, and do not normally need to be adjusted.	Units: Default: Min/Max:	R/S 0.0 0.0 / 9999.0	RW	Real
		96	**VCL Cur Reg Kp** Vector Closed Loop Current Regulator Proportional Gain Proportional gain of the current regulator. Can be adjusted when P95 is set to zero. The default values for P95, P96, and P97 typically provide excellent performance, and do not normally need to be adjusted.	Default: Min/Max:	1250.0 0.0 / 50000.0	RW	Real
		97	**VCL Cur Reg Ki** Vector Closed Loop Current Regulator Integral Gain Integral gain of the current regulator. Can be adjusted when P95 is set to zero. The default values for P95, P96, and P97 typically provide excellent performance, and do not normally need to be adjusted.	Default: Min/Max:	60.0 0.0 / 50000.0	RW	Real
		98	**VEncdls FReg Kp** Encoderless Vector Frequency Regulator Proportional Gain Represents electrical angle compensation dependent on motor cable and PWM Frequency. Determined during autotuning when P35 [Motor Ctrl Mode] is set to one of the FV modes without speed feedback.	Units: Default: Min/Max:	Hz/A 524.0 0.0 / 100000.0	RW	Real
		99	**VEncdls FReg Ki** Encoderless Vector, Frequency Regulator Integral Gain Determined during autotuning when P35 [Motor Ctrl Mode] is set to one of the FV modes without speed feedback. Represents voltage compensation dependent on motor cable and PWM Frequency.	Units: Default: Min/Max:	Hz/A 9080.0 0.0 / 100000.0	RW	Real
		100	**Slip Reg Enable** Slip Regulator Enable Enables or disables the slip frequency regulator. This selection is active only in motor control mode flux vector induction (P35 [Motor Ctrl Mode] = 3 "Induction FV") and encoder feedback is used.	Default: Options:	1 = "Enabled" 0 = "Disabled" 1 = "Enabled"	RW	32-bit Integer
		101	**Slip Reg Ki** Slip Regulator Integral Gain Integral gain for the slip frequency regulator.	Default: Min/Max:	10.00 0.00 / 10000.00	RW	Real
		102	**Slip Reg Kp** Slip Regulator Proportional Gain Proportional gain for the slip frequency regulator.	Default: Min/Max:	0.50 0.00 / 10000.00	RW	Real
		103	**Flux Reg Enable** Flux Regulator Enable Enables or disables the flux regulator. This selection is active only in motor control mode flux vector induction (P35 [Motor Ctrl Mode] = 3 "Induction FV").	Default: Options:	1 – Enabled 0 – Disabled 1 – Enabled	RW	32-bit Integer
		104	**Flux Reg Ki** Flux Regulator Integral Gain Integral gain for the flux regulator.	Default: Min/Max:	30.00 0.00 / 10000.00	RW	Real
		105	**Flux Reg Kp** Flux Regulator Proportional Gain Proportional gain for the flux regulator.	Default: Min/Max:	1.00 0.00 / 10000.00	RW	Real

File	Group	No.	Display Name Full Name Description	Values		Read-Write	Data Type
MOTOR CONTROL	Vector Regulator	**106**	**Trq Adapt Speed** Torque Adaption Speed Operating frequency (speed) at which the adaptive torque control regulators become active as a percent of motor nameplate frequency. As frequency (speed) increases, the torque adapter turns on at a value that is 10 % higher than the value set in this parameter. However, as frequency (speed) decreases, the torque adapter turns off at the value set in this parameter. For example: If this parameter is set to 10.00, as the frequency (speed) increases, the adapter turns on when the value of this parameter reaches 20.00. As the frequency (speed) decreases, the adapter turns off when the value of this parameter reaches 10.00. This selection is active only in motor control mode flux vector induction (P35 [Motor Ctrl Mode] = 3 "Induction FV").	Units: Default: Min/Max:	% 10.00 0.00 / 100.00	RW	Real
		107	**Trq Adapt En** Torque Adaption Enable Enables or disables the adaptive torque control. This selection is active only in motor control mode flux vector induction (P35 [Motor Ctrl Mode] = 3 "Induction FV").	Default: Options:	1 – Enabled 0 – Disabled 1 – Enabled	RW	32-bit Integer
		108	**Phase Delay Comp** Phase Delay Compensation Used to adjust the sample delay compensation gain for the current feedback. The gain compensation is scaled to the sample time (for example, +1.0 would be a compensation of positive 1 sample time).	Default: Min/Max:	0.00 –/+100.00	RW	Real
		109	**Trq Comp Mode** Torque Compensation Mode Automatic: Updates the torque compensation gains (P110 [Trq Comp Mtring] and P111 [Torque Comp Regen]) after autotune.	Default: Options:	1 – Auto 0 – Manual 1 – Auto	RW	32-bit Integer
		110	**Trq Comp Mtring** Torque Compensation Motoring Motor torque compensation applied to the torque command for motoring power. This parameter can be set manually or determined automatically during autotune. (See P109 [Trq Comp Mode].) In manual mode, a value of 5% will increase the commanded torque by 5% (gain of 1.05). This is used for flux vector motor control mode (P35 [Motor Ctrl Mode] = 3 "Induction FV").	Units: Default: Min/Max:	% 0.00 –/+50.00	RW	Real
		111	**Trq Comp Regen** Torque Compensation Regeneration Motor torque compensation applied to the torque command for regenerating torque. This parameter can be set manually or determined automatically during autotune. (See P109 [Trq Comp Mode].) In manual mode, a value of -3% will decrease the commanded torque by 3% (gain of 0.97). This is used for flux vector motor control modes (P35 [Motor Ctrl Mode]).	Units: Default: Min/Max:	% 0.00 –/+50.00	RW	Real
		112	**Slip Adapt Iqs** Slip Adaption Iqs Level of per unit Iqs at which the adaptive slip frequency regulator becomes active. Active when P35 [Motor Ctrl Mode] = 3 "Induction FV."	Default: Min/Max:	0.05 0.00 / 1.00	RW	Real
		113	**SFAdapt SlewLmt** Slip and Flux Adaption Slew Limit Time that the slip, flux, and torque regulators are allowed to converge before the regulators are turned on after the motor speed reaches the level set in P106 [Trq Adapt Speed]. Active when P35 [Motor Ctrl Mode] = 3 "Induction FV."	Units: Default: Min/Max:	Secs 0.00 0.00 / 60.00	RW	Real
		114	**SFAdapt SlewRate** Slip and Flux Adaption Slew Rate Rate that the slip and flux regulators can converge before the regulators are enabled. Active when P35 [Motor Ctrl Mode] = 3 "Induction FV."	Default: Min/Max:	0.005 0.00001 / 1.000000	RW	Real
		115	**SFAdapt CnvrgLvl** Slip and Flux Adaption Converge Level Slip and flux regulator error level that indicates convergence. Active when P35 [Motor Ctrl Mode] = 3 "Induction FV."	Default: Min/Max:	0.01 0.00001 / 1.000000	RW	Real

File	Group	No.	Display Name Full Name Description	Values		Read-Write	Data Type
MOTOR CONTROL	Vector Regulator	**116**	**SFAdapt CnvrgLmt** Slip and Flux Adaption Converge Limit Duration of convergence before the adaption regulators are enabled after the error has decreased below the level set in P115 [SFAdapt CnvrgLvl]. Active when P35 [Motor Ctrl Mode] = 3 "Induction FV."	Default: Min/Max:	0.500 0.000 / 5.000	RW	Real
		120	See page 66.				
		1629	**PM Bus Prot** PM Motor Bus Protection Enter a value to set the maximum limit for P1641 [PM Vel Max]. The drive calculates this during Rotated Tune tests. The calculation uses measured Counter-Electro Magnetic Force (CEMF). The purpose is to protect the drive from over-voltage conditions. These can occur when a PM motor is spinning too fast while the output frequency is zero. Do not change this unless you are using an external solution for CEMF protection. One external solution is a 'crowbar' circuit.	Units: Default: Min/Max:	Hz 60 0 / 39000	RW	Real
		1637	**IPMVqFFwdCemf** IPM Vq Feed Forward CEMF Sets the percentage of the CEMF component of the feed forward voltage in Vq reference when P35 [Motor Ctrl Mode] = 10 "IPM FV."	Units: Default: Min/Max:	% 100.0 0.0 / 100.0	RW	Real
		1638	**IPMVqFFwdLdIdWe** IPM Vq Feed Forward LdIdwe Sets the percentage of the (Ld x Id x we) component of the feed forward voltage in Vq reference when P35 [Motor Ctrl Mode] = 10 "IPM FV."	Units: Default: Min/Max:	% 100.0 0.0 / 100.0	RW	Real
		1639	**IPMVdFFwdLqIqWe** IPM Vd Feed Forward Lqlqwe Sets the percentage of the (Lq x Iq x we) component of the feed forward voltage in Vd reference when P35 [Motor Ctrl Mode] = 10 "IPM FV."	Units: Default: Min/Max:	% 100.0 0.0 / 100.0	RW	Real
		1640	**IPM Max Cur** IPM Maximum Current Sets the current trip level.	Units: Default: Min/Max:	% 200.0 0.0 / 400.0	RW	Real
		1641	**PM Vel Max** PM Motor Maximum Velocity Enter a value to set the maximum velocity of the PM motor. The purpose is to protect the drive from over-voltage conditions. These can occur when a PM motor is spinning too fast while the output frequency is zero. P1629 [PM Bus Prot] limits the value of this parameter. Do not change this unless you are using an external solution for CEMF protection. One external solution is a 'crowbar' circuit.	Units: Default: Min/Max:	Hz 60 0.00 / 324	RW	Real
		1642	**IPM TrqTrim Kp** Torque Trim Kp Gain for IPM Control Sets the Kp term for Torque Trim function.	Default: Min/Max:	0.10 0.00 / 100.00	RW	Real
		1643	**IPM TrqTrim Ki** Torque Trim Ki Gain for IPM Control Sets the Ki term for Torque Trim function.	Default: Min/Max:	1.00 0.00 / 100.00	RW	Real
		1644	**IPM TrqTrim HLim** Torque Trim Hi Limit for IPM Control Sets the high limit for Torque Trim function.	Default: Min/Max:	0.20 0.00 / 2.00	RW	Real
		1645	**IPM TrqTrim LLim** Torque Trim Lo Limit for IPM Control Sets the low limit for Torque Trim function.	Default: Min/Max:	-0.20 -2.00 / 0.00	RW	Real

Drive (Port 0) Feedback & I/O File

File	Group	No.	Display Name Full Name Description	Values		Read-Write	Data Type
FEEDBACK & I/O	Feedback	125	**Pri Vel Fdbk Sel** Primary Velocity Feedback Select Selects the source of the P3 [Mtr Vel Fdbk] and P131 [Active Vel Fdbk] that will be used when the drive is in operation without an Automatic Tach Switchover. Possible selections include: Port 0 – Open Loop Fdbk, Port 0 – Simulator Fdbk, and any Port that contains a feedback module (for example, Encoder). The Disabled and Open Loop Fdbk selections are functionally equivalent, with Open Loop being the default setting. Open Loop velocity feedback is estimated based on P1 [Output Frequency] and P5 [Torque Cur Fdbk], adjusted using P621 [Slip RPM at FLA]. Simulator Fdbk is available in the Flux Vector selections for P35 [Motor Ctrl Mode]. Simulator velocity feedback is calculated based on P690 [Limited Trq Ref] and P76 [Total Inertia]. This selection is useful for drive operational checkout and test when motor movement is undesired. In simulation mode, gating of the power inverter section of the drive is disabled. Selection of any option module port that contains an encoder module results in P3 [Mtr Vel Fdbk] based on a measured value. Data obtained from the selected feedback module will be used to determine motor velocity feedback. Primary feedback refers to the Automatic Feedback Loss Switchover option. This option will automatically switch from the primary to the alternate feedback source upon loss of the primary feedback source. If this option is not being used, then the primary feedback will always be the active feedback source. The active feedback source is typically the primary feedback.	Default: Min/Max:	137 1 / 159999	RW	32-bit Integer
		126	**Pri Vel FdbkFltr** Primary Velocity Feedback Filter Adjusts a filter setting that is applied to the motor velocity feedback source that is selected by P125 [Pri Vel Fdbk Sel]. The purpose of this filter is to reduce the level of noise in the feedback signal. Make a selection for a value that is higher than the value in parameter 636 [Speed Reg BW]. This is moving average type filter that has a delay setting of N, where N is an integer number (0, 1, 2 . . .). A setting of zero provides no filtering and no delay. Larger values of N result in more filtering and more delay. The best setting for this filter depends on the level of noise in the feedback signal and the bandwidth setting of the velocity regulator. In the Flux Vector selections for P35 [Motor Ctrl Mode], setting P636 [Speed Reg BW] to a non-zero setting places the drive in an automatic gain/filter adjustment mode. When the drive is in this automatic adjustment mode, the value of P666 [Speed Comp Gain] and possibly P644 [Spd Err Fltr BW] are adjusted, based on the setting of P126 [Pri Vel FdbkFltr]. The automatic setting of P644 [Spd Err Fltr BW] becomes independent of the feedback filter setting when P704 [InAdp LdObs Mode] is set to 1 "InertiaAdapt."	Default: Options:	3 – 50R/S Noise 0 – 190R/S Noise 1 – 160R/S Noise 2 – 100R/S Noise 3 – 50R/S Noise 4 – 25R/S Noise 5 – 12R/S Noise 6 – 6R/S Noise 7 – 3R/S Noise	RW	32-bit Integer
		127	**Pri Vel Feedback** Primary Velocity Feedback Output of the Primary Velocity Feedback Delay filter, in units of Hz or RPM, depending on the value of P300 [Speed Units]. Adjustment of the delay filter is made using P126 [Pri Vel FdbkFltr]. The Primary Velocity Feedback is used when the drive is operating without an Automatic Tach Switchover.	Units: Default: Min/Max:	Hz RPM 0.00 –/+P27 [Motor NP Hertz] –/+P28 [Motor NP RPM] x 8	RO	Real
		128	**Alt Vel Fdbk Sel** Alternate Velocity Feedback Select Selects the source of the P3 [Mtr Vel Fdbk] and P131 [Active Vel Fdbk] to be used when the drive is in operation with an Automatic Tach Switchover. See P635 [Spd Options Ctrl], bit 7 "Auto Tach SW." Alternate feedback refers to the Automatic Feedback Loss Switchover option. This option will automatically switch from the primary to the alternate feedback source upon loss of the primary feedback source. If this option is not being used, then the primary feedback will always be the active feedback source. The active feedback source is typically the primary feedback.	Default: Min/Max:	137 1 / 159999	RW	32-bit Integer

File	Group	No.	Display Name Full Name Description	Values		Read-Write	Data Type
FEEDBACK & I/O	Feedback	**129**	**Alt Vel FdbkFltr** Alternate Velocity Feedback Filter Adjusts a filter setting that is applied to the motor velocity feedback source that is selected by P128 [Alt Vel Fdbk Sel]. The purpose of this filter is to reduce the level of noise in the feedback signal. Filter adjustment and operation is similar to P126 [Pri Vel FdbkFltr]. Make a selection for a value that is higher than the value in parameter 648 [Alt Speed Reg BW].	Default: Options:	3 – 50R/S Noise 0 – 190R/S Noise 1 – 160R/S Noise 2 – 100R/S Noise 3 – 50R/S Noise 4 – 25R/S Noise 5 – 12R/S Noise 6 – 6R/S Noise 7 – 3R/S Noise	RW	32-bit Integer
		130	**Alt Vel Feedback** Alternate Velocity Feedback Output of the Alternate Velocity Feedback Delay filter, displayed in units of Hz or RPM, depending on the value of P300 [Speed Units]. Adjustment of the delay filter is made using P126 [Pri Vel FdbkFltr]. The Alternate Velocity Feedback is used when the drive is operating with an Automatic Tach Switchover.	Units: Default: Min/Max:	Hz RPM 0.00 –/+P27 [Motor NP Hertz] –/+P28 [Motor NP RPM] x 8	RO	Real
		131	**Active Vel Fdbk** Active Velocity Feedback Active motor velocity feedback value that used by the Flux Vector control's velocity regulator or the V/Hz and Sensorless Vector velocity regulator. This value in use is the result of the Primary/Alternate feedback selection. When the drive is operating without an Automatic Tach Switchover, then P127 [Pri Vel Feedback] is selected. When the drive is operating with an Automatic Tach Switchover, then the P130 [Alt Vel Feedback] will be selected. Status Bit 5 "FdbkLoss SwO" will become set in P936 [Drive Status 2] when an Automatic Tach Switchover has occurred. When operation in a non-vector control mode (V/Hz or Sensorless Vector) with open loop feedback, the Active Velocity Feedback parameter value will track the value in P597 [Final Speed Ref].	Units: Default: Min/Max:	Hz RPM 0.00 –/+P27 [Motor NP Hertz] –/+P28 [Motor NP RPM] x 8	RO	Real
		132	**Aux Vel Fdbk Sel** Auxiliary Velocity Feedback Select Selects the source of the drive's P134 [Aux Vel Feedback]. Possible selections are the same as for P125 [Pri Vel Fdbk Sel]. Auxiliary feedback source is made available as a speed reference selection. It can be used when the drive's speed reference source needs to be an encoder.	Default: Min/Max:	137 1 / 159999	RW	32-bit Integer
		133	**Aux Vel FdbkFltr** Auxiliary Velocity Feedback Filter Adjusts a filter setting that is applied to the P134 [Aux Vel Feedback] that is selected by P132 [Aux Vel Fdbk Sel]. The purpose of this filter is to reduce the level of noise present in the feedback signal. Filter adjustment and operation is similar to P126 [Pri Vel FdbkFltr].	Default: Options:	3 – 50R/S Noise 0 – 190R/S Noise 1 – 160R/S Noise 2 – 100R/S Noise 3 – 50R/S Noise 4 – 25R/S Noise 5 – 12R/S Noise 6 – 6R/S Noise 7 – 3R/S Noise	RW	32-bit Integer
		134	**Aux Vel Feedback** Auxiliary Velocity Feedback Output of the Auxiliary Velocity Feedback Delay filter, in units of Hz or RPM, depending on the value of P300 [Speed Units]. Adjustment of the delay filter is made using P126 [Pri Vel FdbkFltr]. Typically used as a speed reference source. This selection is available in P545 [Spd Ref A Sel] and P550 [Spd Ref B Sel].	Units Default: Min/Max:	Hz RPM 0.00 –/+P27 [Motor NP Hertz] –/+P28 [Motor NP RPM] x 8	RO	Real
		135	**Psn Fdbk Sel** Position Feedback Select Selects the source of P847 [Psn Fdbk]. Possible selections include: Port 0 – Simulator Fdbk, and any Port that contains a feedback module (for example, Encoder). Open Loop Feedback is not available as a Position feedback source. The default setting is P138 [Simulator Fdbk]. This is a test mode where position feedback is calculated based on P690 [Limited Trq Ref] and P76 [Total Inertia]. When position control is used, a valid position feedback source must be selected.	Default: Min/Max:	138 1 / 159999	RW	32-bit Integer

File	Group	No.	Display Name Full Name Description	Values		Read-Write	Data Type
FEEDBACK & I/O	Feedback	136	755 **Load Psn FdbkSel** Load Position Feedback Select Selects a position load feedback source for the position control. The position load feedback P847 [Psn Fdbk] indicates the selected position feedback value. The value forms the primary feedback for the position regulator integration channel.	Default: Min/Max:	847 1 / 159999	RW	32-bit Integer
		137	**Open Loop Fdbk** Open Loop Feedback An estimated motor feedback source that is available to any of the Velocity Feedback Selection parameters – P125 [Pri Vel Fdbk Sel], P128 [Alt Vel Fdbk Sel], and P132 [Aux Vel Fdbk Sel]. Open Loop Feedback is not available as a Position feedback source. The Open Loop Feedback's parameter value has units of encoder counts as established by P141 [Virtual Enc EPR]. Open Loop feedback is estimated based on P1 [Output Frequency] and P5 [Torque Cur Fdbk], adjusted using P621 [Slip RPM at FLA].	Default: Options:	0 –2147483648 / 2147483647	RO	32-bit Integer
		138	**Simulator Fdbk** Simulator Feedback Simulator Feedback is a calculated motor feedback source. It can be used when operating in any of the Flux Vector control modes that are selected in P35 [Motor Ctrl Mode]. Simulator Feedback is available to any of the Velocity Feedback Selection parameters: P125 [Pri Vel Fdbk Sel], P128 [Alt Vel Fdbk Sel], and P132 [Aux Vel Fdbk Sel]. Simulator Feedback is also available as a Position feedback source as selected by P135 [Psn Fdbk Sel]. The Simulator Feedback's parameter value has units of encoder counts, as established by P141 [Virtual Enc EPR]. Simulator velocity feedback is calculated based on P690 [Limited Trq Ref] and P76 [Total Inertia]. This selection is useful for drive operational checkout and test when motor movement is undesired. In simulation mode, gating of the power inverter section of the drive is disabled.	Default: Options:	0 –2147483648 / 2147483647	RO	32-bit Integer
		139	755 **Delayed Spd Ref** Delayed Speed Reference One sample period delayed output of P594 [Ramped Spd Ref]. Used in some applications to synchronize the speed reference value when controlling multiple drives. In these applications, the drive that supplies the master speed reference would use the [Delayed Spd Ref] value. Setting P635 [Spd Options Ctrl] Bit 8 "Delayed Ref" will select the delayed reference in the master drive. P594 [Ramped Spd Ref] would then be transmitted to the slave drives over a communication link.	Units: Default: Min/Max:	Hz RPM 0.00 –/+P27 [Motor NP Hertz] –/+P28 [Motor NP RPM] x 8	RO	Real
		140	755 **Virtual EncDelay** Virtual Encoder Delay One sample period delayed output of P142 [Virtual Enc Psn]. Used in some applications to phase synchronize position reference though a drive communications link. The master is delayed one sample while the downstream drives update their position references – then all drives sample position simultaneously. The downstream drives do not select a delay. The selection of the delayed or non-delayed position reference is made by choosing the desired parameter in P766 [Psn Direct Stpt].	Default: Options:	0 –2147483648 / 2147483624	RO	32-bit Integer
		141	755 **Virtual Enc EPR** Virtual Encoder Edges Per Revolution Equivalent Edges Per Revolution (EPR) or line count of a virtual encoder. A virtual encoder is a position reference whose input is derived from the speed reference. It accumulates pulses at the same rate as a real encoder of identical Pulses Per Revolution (PPR). Enter the equivalent PPR. For example, enter 1024 PPR to match an encoder with 1024 EPR.	Default: Min/Max:	4096 10 / 67108864	RW	32-bit Integer
		142	755 **Virtual Enc Psn** Virtual Encoder Position A 32 bit pulse accumulator of the virtual encoder. The accumulated pulse count is equivalent to the hardware accumulator of a real encoder. It accumulates at a rate of 4x the value placed in P141 [Virtual Enc EPR]. The accumulator starts at zero upon position enable.	Default: Min/Max:	0 –2147483648 / 2147483647	RO	32-bit Integer

File	Group	No.	Display Name Full Name Description	Values		Read-Write	Data Type
FEEDBACK & I/O	Digin Functions	150	**Digital In Cfg** Digital Input Configure Defines operation for DI Run type parameters. Run Edge (0) – Control function requires a rising edge (open to close transition) in order for the drive to run. Run Level (1) – Provides a run level input. Does not require a transition for enable or fault, but a transition is required for a stop. When set to 1 "Run Level" the absence of a run command is indicated as a stop asserted and parameter 935 [Drive Status 1] Bit 0 will be low.	Default: Options:	0 – Run Edge 0 – Run Edge 1 – Run Level	RW	32-bit Integer
			ATTENTION: Equipment damage and/or personal injury may result if this parameter is used in an inappropriate application. Do not use this function without considering applicable local, national and international codes, standards, regulations, or industry guidelines.				
		155	**DI Enable** Digital Input Enable Assigns a digital input used to enable the drive.	Default: Min/Max:	0.00 0.00 / 159999.15	RW	32-bit Integer
		156	**DI Clear Fault** Digital Input Clear Fault Assigns a digital input used to clear faults.	Default: Min/Max:	0.00 0.00 / 159999.15	RW	32-bit Integer
		157	**DI Aux Fault** Digital Input Auxiliary Fault Assigns a digital input used to force an external auxiliary fault.	Default: Min/Max:	0.00 0.00 / 159999.15	RW	32-bit Integer
		158	**DI Stop** Digital Input Stop Assigns a digital input used to issue a stop command.	Default: Min/Max:	0.00 0.00 / 159999.15	RW	32-bit Integer
		159	**DI Cur Lmt Stop** Digital Input Current Limit Stop Assigns a digital input used to perform a current limited stop.	Default: Min/Max:	0.00 0.00 / 159999.15	RW	32-bit Integer
		160	**DI Coast Stop** Digital Input Coast Stop Assigns a digital input used to perform a coast-to-stop.	Default: Min/Max:	0.00 0.00 / 159999.15	RW	32-bit Integer
		161	**DI Start** Digital Input Start Assigns a digital input used to start the drive (3-wire control).	Default: Min/Max:	0.00 0.00 / 159999.15	RW	32-bit Integer
		162	**DI Fwd Reverse** Digital Input Forward Reverse Assigns a digital input used to command reverse direction.	Default: Min/Max:	0.00 0.00 / 159999.15	RW	32-bit Integer
		163	**DI Run** Digital Input Run Assigns a digital input used to run the drive (2-wire control).	Default: Min/Max:	0.00 0.00 / 159999.15	RW	32-bit Integer
		164	**DI Run Forward** Digital Input Run Forward Assigns a digital input used to run the drive (2 wire control) and command forward direction.	Default: Min/Max:	0.00 0.00 / 159999.15	RW	32-bit Integer

File	Group	No.	Display Name Full Name Description	Values		Read-Write	Data Type
FEEDBACK & I/O	Digin Functions	165	**DI Run Reverse** Digital Input Run Reverse Assigns a digital input used to run the drive (2 wire control) and command reverse direction.	Default: Min/Max:	0.00 0.00 / 159999.15	RW	32-bit Integer
		166	**DI Jog 1** Digital Input Jog 1 Assigns a digital input used to jog the drive at the speed of P556 [Jog Speed 1].	Default: Min/Max:	0.00 0.00 / 159999.15	RW	32-bit Integer
		167	**DI Jog 1 Forward** Digital Input Jog 1 Forward Assigns a digital input used to jog the drive in the forward direction at the speed of P556 [Jog Speed 1].	Default: Min/Max:	0.00 0.00 / 159999.15	RW	32-bit Integer
		168	**DI Jog 1 Reverse** Digital Input Jog 1 Reverse Assigns a digital input used to jog the drive in the reverse direction at the speed of P556 [Jog Speed 1].	Default: Min/Max:	0.00 0.00 / 159999.15	RW	32-bit Integer
		169	**DI Jog 2** Digital Input Jog 2 Assigns a digital input used to jog the drive at the speed of P557 [Jog Speed 2].	Default: Min/Max:	0.00 0.00 / 159999.15	RW	32-bit Integer
		170	**DI Jog 2 Forward** Digital Input Jog 2 Forward Assigns a digital input used to jog the drive in the forward direction at the speed of P557 [Jog Speed 2].	Default: Min/Max:	0.00 0.00 / 159999.15	RW	32-bit Integer
		171	**DI Jog 2 Reverse** Digital Input Jog 2 Reverse Assigns a digital input used to jog the drive in the reverse direction at the speed of P557 [Jog Speed 2].	Default: Min/Max:	0.00 0.00 / 159999.15	RW	32-bit Integer
		172	**DI Manual Ctrl** Digital Input Manual Control Assigns a digital input used to command manual control. Start, jog, and direction are under the digital input's exclusive control. P563 [DI ManRef Sel] is the source of the speed reference unless overwritten by P328 [Alt Man Ref Sel].	Default: Min/Max:	0.00 0.00 / 159999.15	RW	32-bit Integer
		173 174 175	**DI Speed Sel 0** **DI Speed Sel 1** **DI Speed Sel 2** Digital Input Speed Select *n* Assigns digital inputs used to select between speed references as follows: Input Status (1 = Input Actuated) / Auto Reference Source (Parameter) DI Speed Sel 2 / DI Speed Sel 1 / DI Speed Sel 0 0 / 0 / 0 — Reference A (P545) 0 / 0 / 1 — Reference A (P545) 0 / 1 / 0 — Reference B (P550) 0 / 1 / 1 — Preset Speed 3 (P573) 1 / 0 / 0 — Preset Speed 4 (P574) 1 / 0 / 1 — Preset Speed 5 (P575) 1 / 1 / 0 — Preset Speed 6 (P576) 1 / 1 / 1 — Preset Speed 7 (P577)	Default: Min/Max:	0.00 0.00 / 159999.15	RW	32-bit Integer
		176	**DI HOA Start** Digital Input Hand-Off-Auto Start A start for a hand-off-auto configuration. A delay filter allows the start and stop signals to come from the same circuit.	Default: Min/Max:	0.00 0.00 / 159999.15	RW	32-bit Integer

File	Group	No.	Display Name Full Name Description	Values		Read-Write	Data Type
FEEDBACK & I/O	Digin Functions	177	**DI MOP Inc** Digital Input Motor Operated Potentiometer Increment Assigns a digital input used to increment the MOP speed reference.	Default: Min/Max:	0.00 0.00 / 159999.15	RW	32-bit Integer
		178	**DI MOP Dec** Digital Input Motor Operated Potentiometer Decrement Assigns a digital input used to decrement the MOP speed reference.	Default: Min/Max:	0.00 0.00 / 159999.15	RW	32-bit Integer
		179	**DI Accel 2** Digital Input Acceleration 2 Assigns a digital input used to activate P536 [Accel Time 2].	Default: Min/Max:	0.00 0.00 / 159999.15	RW	32-bit Integer
		180	**DI Decel 2** Digital Input Deceleration 2 Assigns a digital input used to activate P538 [Decel Time 2].	Default: Min/Max:	0.00 0.00 / 159999.15	RW	32-bit Integer
		181 182	**DI SpTqPs Sel 0** **DI SpTqPs Sel 1** Digital Input Speed Torque Position Select *n* Assigns digital inputs used to select between speed, torque, and position modes. Refer to position B5 in the block diagram on page 436 for details.	Default: Min/Max:	0.00 0.00 / 159999.15	RW	32-bit Integer
		185	**DI Stop Mode B** Digital Input Stop Mode B Assigns a digital input used to activate P371 [Stop Mode B].	Default: Min/Max:	0.00 0.00 / 159999.15	RW	32-bit Integer
		186	**DI BusReg Mode B** Digital Input Bus Regulation Mode B Assigns a digital input used to activate P373 [Bus Reg Mode B].	Default: Min/Max:	0.00 0.00 / 159999.15	RW	32-bit Integer
		187	**DI PwrLoss ModeB** Digital Input Power Loss Mode B Assigns a digital input used to activate P453 [Pwr Loss Mode B].	Default: Min/Max:	0.00 0.00 / 159999.15	RW	32-bit Integer
		188	**DI Pwr Loss** Digital Input Power Loss Assigns a digital input used to force a power loss condition.	Default: Min/Max:	0.00 0.00 / 159999.15	RW	32-bit Integer
		189	**DI Precharge** Digital Input Precharge This input is useful only on common bus inverters (DC input drives). It indicates when the drive is disconnected and connected to the DC bus. Its purpose is to avoid large inrush currents that would normally occur if the drive were connected to the DC bus without being in the precharge state. Resetting (de-energizing) the input, indicates that the drive is disconnected from the DC bus. When the input is reset, the drive enters the precharge state and performs a coast to stop. Setting (energizing) the input indicates that the drives is connected to the DC bus. When the input is set, the drive returns to its normal precharge state and start/run control.	Default: Min/Max:	0.00 0.00 / 159999.15	RW	32-bit Integer

Auto Reference Source (Parameter)	Input Status (1 = Input Actuated)	
	DI Speed Sel 1	DI Speed Sel 0
P309	0	0
P310	0	1
P311	1	0
P312	1	1

File	Group	No.	Display Name Full Name Description	Values		Read-Write	Data Type
FEEDBACK & I/O	Digin Functions	190	**DI Prchrg Seal** Digital Input Precharge Seal Assigns a digital input used to force a unique fault when an external precharge circuit opens.	Default: Min/Max:	0.00 0.00 / 159999.15	RW	32-bit Integer
		191	**DI PID Enable** Digital Input Proportional Integral Derivative Enable Assigns a digital input used to activate the Process PID control.	Default: Min/Max:	0.00 0.00 / 159999.15	RW	32-bit Integer
		192	**DI PID Hold** Digital Input Proportional Integral Derivative Hold Assigns a digital input used to hold the Process PID integrator.	Default: Min/Max:	0.00 0.00 / 159999.15	RW	32-bit Integer
		193	**DI PID Reset** Digital Input Proportional Integral Derivative Reset Assigns a digital input used to reset the Process PID integrator.	Default: Min/Max:	0.00 0.00 / 159999.15	RW	32-bit Integer
		194	**DI PID Invert** Digital Input Proportional Integral Derivative Invert Assigns a digital input used to invert the output of the Process PID control.	Default: Min/Max:	0.00 0.00 / 159999.15	RW	32-bit Integer
		195	**DI Torque StptA** Digital Input Torque Setpoint A Assigns a digital input used to force P676 [Trq Ref A Stpt] as the source for Torque Reference A, regardless of the setting in P675 [Trq Ref A Sel]. Used when the drive is in a mode that is commanding torque (see P309…P312).	Default: Min/Max:	0.00 0.00 / 159999.15	RW	32-bit Integer
		196	**DI Fwd End Limit** Digital Input Forward End Limit Assigns a digital input used to trigger a Forward End Limit. The resulting action depends on whether the drive is operating as a speed, torque or position regulator. The mode of operation is indicated by parameter 935 [Drive Status 1] Bit 21 "Speed Mode," Bit 22 "PositionMode," and Bit 23 "Torque Mode." When the drive is operating as a speed regulator, the resulting action is to execute a "Fast Stop" command. After the drive stops in this case, a Start command in the same direction will only allow 0 Hz to be commanded. A Start in the opposite direction will allow motion with a speed command from the selected speed reference. This function is usually used with a limit switch near the point at which the drive should stop. When the drive is operating as a torque regulator, the resulting action is to execute a "Fast Stop" command. After the drive stops in this case, it will restart and continue operation (if given a new start command). When the drive is operating as a position regulator, the resulting action is to execute a "Fast Stop" command. After the drive stops in this case, it will restart and continue to move towards the position reference (if given a new start command).	Default: Min/Max:	0.00 0.00 / 159999.15	RW	32-bit Integer
		197	**DI Fwd Dec Limit** Digital Input Forward Deceleration Limit Assigns a digital input used to trigger a Forward Decel Limit. The resulting action depends on whether the drive is operating as a speed, torque or position regulator. The mode of operation is indicated by parameter 935 [Drive Status 1] Bit 21 "Speed Mode," Bit 22 "PositionMode" and Bit 23 "Torque Mode." When the drive is operating as a speed regulator, the resulting action is to override the speed reference and decelerate to Preset Speed 1. This function is usually used with a limit switch and initiates the slowing down process prior to encountering the End Limit. When the drive is operating as a torque regulator, the drive ignores this signal and continues operating at its torque reference. When the drive is operating as a position regulator, the drive ignores this signal and continues moving towards its position reference.	Default: Min/Max:	0.00 0.00 / 159999.15	RW	32-bit Integer

File	Group	No.	Display Name Full Name Description	Values		Read-Write	Data Type
FEEDBACK & I/O	Digin Functions	198	**DI Rev End Limit** Digital Input Reverse End Limit Assigns a digital input used to trigger a Reverse End Limit. The resulting action depends on whether the drive is operating as a speed, torque or position regulator. The mode of operation is indicated by parameter 935 [Drive Status 1] Bit 21 "Speed Mode," Bit 22 "PositionMode" and Bit 23 "Torque Mode." When the drive is operating as a speed regulator, the resulting action is to execute a "Fast Stop" command. After the drive stops in this case, a Start command in the same direction will only allow 0 Hz to be commanded. A Start in the opposite direction will allow motion with a speed command from the selected speed reference. This function is usually used with a limit switch near the point at which the drive should stop. When the drive is operating as a torque regulator, the resulting action is to execute a "Fast Stop" command. After the drive stops in this case, it will restart and continue operation (if given a new start command). When the drive is operating as a position regulator, the resulting action is to execute a "Fast Stop" command. After the drive stops in this case, it will restart and continue to move towards the position reference (if given a new start command).	Default: Min/Max:	0.00 0.00 / 159999.15	RW	32-bit Integer
		199	**DI Rev Dec Limit** Digital Input Reverse Deceleration Limit Assigns a digital input used to trigger a Reverse Decel Limit. The resulting action depends on whether the drive is operating as a speed, torque or position regulator. The mode of operation is indicated by parameter 935 [Drive Status 1] Bit 21 "Speed Mode," Bit 22 "PositionMode" and Bit 23 "Torque Mode." When the drive is operating as a speed regulator, the resulting action is to override the speed reference and decelerate to Preset Speed 1. This function is usually used with a limit switch and initiates the slowing down process prior to encountering the End Limit. When the drive is operating as a torque regulator, the drive ignores this signal and continues operating at its torque reference. When the drive is operating as a position regulator, the drive ignores this signal and continues moving towards its position reference.	Default: Min/Max:	0.00 0.00 / 159999.15	RW	32-bit Integer
		200	**DI PHdwr OvrTrvl** Digital Input Positive Hardware Over Travel Assigns a digital input used to trigger a Positive Hardware Over-travel. The resulting action is to immediately fault and produce zero torque. After the drive is stopped, the condition will need to be cleared and the fault will need to be reset. The drive will restart (if given a new start command), and continue operation. It will follow any speed reference, position reference or torque reference. The drive's direction is not modified or limited after the restart.	Default: Min/Max:	0.00 0.00 / 159999.15	RW	32-bit Integer
		201	**DI NHdwr OvrTrvl** Digital Input Negative Hardware Over Travel Assigns a digital input used to trigger a Negative Hardware Over-travel. The resulting action is to immediately fault and produce zero torque. After the drive is stopped, the condition will need to be cleared and the fault will need to be reset. The drive will restart (if given a new start command), and continue operation. It will follow any speed reference, position reference or torque reference. The drive's direction is not modified or limited after the restart.	Default: Min/Max:	0.00 0.00 / 159999.15	RW	32-bit Integer

File	Group	No.	Display Name Full Name Description	Values	Read-Write	Data Type
FEEDBACK & I/O	Control Board IO	220	**755 Digital In Sts** Digital Input Status Status of the digital input resident on the main control board (Port 0). Options: Reserved, Reserved, Reserved, Reserved, Reserved, Reserved, Reserved, Reserved, Reserved, Reserved, Reserved, Reserved, Reserved, Reserved, Reserved, Digital In 0 Default: 0 0 0 0 0 0 0 0 0 0 0 0 0 0 0 0 Bit: 15 14 13 12 11 10 9 8 7 6 5 4 3 2 1 0 0 = Condition False 1 = Condition True		RO	16-bit Integer

File	Group	No.	Display Name Full Name Description	Values		Read-Write	Data Type
FEEDBACK & I/O	Digital Inputs	220	**753 Digital In Sts** Digital Input Status Status of the digital inputs resident on the main control board (Port 0). Options: Reserved, Reserved, Reserved, Reserved, Reserved, Reserved, Reserved, Reserved, Reserved, Reserved, Reserved, Reserved, Reserved, Digital In 2, Digital In 1, Digital In 0 Default: 0 0 0 0 0 0 0 0 0 0 0 0 0 0 0 0 Bit: 15 14 13 12 11 10 9 8 7 6 5 4 3 2 1 0 0 = Condition False 1 = Condition True			RO	16-bit Integer
		222	**753 Dig In Filt Mask** Digital Input Filter Mask Filters the selected digital input. **Important:** Only used by the PowerFlex 753 main control board. Options: Reserved, Reserved, Reserved, Reserved, Reserved, Reserved, Reserved, Reserved, Reserved, Reserved, Reserved, Reserved, Reserved, Input 2, Input 1, Reserved Default: 0 0 0 0 0 0 0 0 0 0 0 0 0 0 0 0 Bit: 15 14 13 12 11 10 9 8 7 6 5 4 3 2 1 0 0 = Condition False 1 = Condition True			RW	16-bit Integer
		223	**753 Dig In Filt** Digital Input Filter Sets the amount of filtering on the digital inputs. **Important:** Only used by the PowerFlex 753 main control board.	Units: Default: Min/Max:	mS 4 2 / 10	RW	Real

File	Group	No.	Display Name Full Name Description	Values	Read-Write	Data Type
FEEDBACK & I/O	Digital Outputs	225	753 **Dig Out Sts** Digital Output Status Status of the digital outputs. Options: Reserved, Reserved, Reserved, Reserved, Reserved, Reserved, Reserved, Reserved, Reserved, Reserved, Reserved, Reserved, Reserved, Reserved, Trans Out 0, Relay Out 0 Default: 0 0 0 0 0 0 0 0 0 0 0 0 0 0 0 0 Bit: 15 14 13 12 11 10 9 8 7 6 5 4 3 2 1 0 0 = Condition False 1 = Condition True		RO	16-bit Integer
		226	753 **Dig Out Invert** Digital Output Invert Inverts the selected digital output. Options: Reserved, Reserved, Reserved, Reserved, Reserved, Reserved, Reserved, Reserved, Reserved, Reserved, Reserved, Reserved, Reserved, Reserved, Trans Out 0, Relay Out 0 Default: 0 0 0 0 0 0 0 0 0 0 0 0 0 0 0 0 Bit: 15 14 13 12 11 10 9 8 7 6 5 4 3 2 1 0 0 = Condition False 1 = Condition True		RW	16-bit Integer
		227	753 **Dig Out Setpoint** Digital Output Setpoint Controls Relay or Transistor Outputs when chosen as the source. Can be used to control outputs from a communication device using DataLinks. Options: Reserved, Reserved, Reserved, Reserved, Reserved, Reserved, Reserved, Reserved, Reserved, Reserved, Reserved, Reserved, Reserved, Reserved, Trans Out 0, Relay Out 0 Default: 0 0 0 0 0 0 0 0 0 0 0 0 0 0 0 0 Bit: 15 14 13 12 11 10 9 8 7 6 5 4 3 2 1 0 0 = Condition False 1 = Condition True		RW	16-bit Integer
		230	753 **R00 Sel** Relay Output 0 Select Selects the source that will energize the relay output. Any status parameter bit can be used as an output source. For example P935 [Drive Status 1] Bit 7 "Faulted."	Default: 0 Min/Max: 0 / 159999.15	RW	32-bit Integer
		231	753 **R00 Level Sel** Relay Output 0 Level Select Selects the source of the level that will be compared.	Default: 0 Min/Max: 0 / 159999	RW	32-bit Integer
		232	753 **R00 Level** Relay Output 0 Level Sets the level compare value.	Default: 0.0 Min/Max: –/+1000000.0	RW	Real

File	Group	No.	Display Name Full Name Description	Values		Read-Write	Data Type
FEEDBACK & I/O	Digital Outputs	233	753 **R00 Level CmpSts** Relay Output 0 Level Compensation Status Status of the level compare, and a possible source for a relay or transistor output. Relay Output *n* Select or Transistor Output *n* Select must have this selected to energize the output. Can be used without a physical output as status information only.			RO	16-bit Integer
		234	753 **R00 On Time** Relay Output 0 On Time Sets the "ON Delay" time for the digital outputs. This is the time between the occurrence of a condition and activation of the relay.	Units: Default: Min/Max:	Secs 0.00 0.00 / 600.00	RW	Real
		235	753 **R00 Off Time** Relay Output 0 Off Time Sets the "OFF Delay" time for the digital outputs. This is the time between the disappearance of a condition and de-activation of the relay.	Units: Default: Min/Max:	Secs 0.00 0.00 / 600.00	RW	Real
		240	753 **T00 Sel** Transistor Output 0 Select Selects the source that will energize the relay or transistor output. Any status parameter bit can be used as an output source. For example P935 [Drive Status 1] Bit 7 "Faulted."	Default: Min/Max:	0 0 / 159999.15	RW	32-bit Integer
		241	753 **T00 Level Sel** Transistor Output 0 Level Select Selects the source of the level that will be compared.	Default: Min/Max:	0 0 / 159999	RW	32-bit Integer
		242	753 **T00 Level** Transistor Output 0 Level Sets the level compare value.	Default: Min/Max:	0.0 –/+1000000.0	RW	Real
		243	753 **T00 Level CmpSts** Transistor Output 0 Level Compensation Status Status of the level compare, and a possible source for the transistor output. Transistor Output 0 Select must have this selected to energize the output. Can be used without a physical output as status information only.			RO	16-bit Integer

Options	Reserved	Reserved	Reserved	Reserved	Reserved	Reserved	Reserved	Reserved	Reserved	Reserved	Reserved	Reserved	AbsGrtThanEq	Abs Less Than	Grt Than Equ	Less Than
Default	0	0	0	0	0	0	0	0	0	0	0	0	0	0	0	0
Bit	15	14	13	12	11	10	9	8	7	6	5	4	3	2	1	0

0 = Condition False
1 = Condition True

Bit 0 "Less Than" – Level source is less than the level value.
Bit 1 "Grt Than Equ" – Level source is greater than or equal to the level value.
Bit 2 "Abs Less Than" – Absolute value of the level source is less than the absolute value of the level value.
Bit 3 "AbsGrtThanEq" – Absolute value of the level source is greater than or equal to the absolute value of the level value.

Options	Reserved	Reserved	Reserved	Reserved	Reserved	Reserved	Reserved	Reserved	Reserved	Reserved	Reserved	Reserved	AbsGrtThanEq	Abs Less Than	Grt Than Equ	Less Than
Default	0	0	0	0	0	0	0	0	0	0	0	0	0	0	0	0
Bit	15	14	13	12	11	10	9	8	7	6	5	4	3	2	1	0

0 = Condition False
1 = Condition True

Bit 0 "Less Than" – Level source is less than the level value.
Bit 1 "Grt Than Equ" – Level source is greater than or equal to the level value.
Bit 2 "Abs Less Than" – Absolute value of the level source is less than the absolute value of the level value.
Bit 3 "AbsGrtThanEq" – Absolute value of the level source is greater than or equal to the absolute value of the level value.

File	Group	No.	Display Name Full Name Description	Values		Read-Write	Data Type
FEEDBACK & I/O	Digital Outputs	244	753 **T00 On Time** Transistor Output 0 On Time Sets the "ON Delay" time for the digital outputs. This is the time between the occurrence of a condition and activation of the relay or transistor.	Units: Default: Min/Max:	Secs 0 0 / 159999	RW	32-bit Integer
		245	753 **T00 Off Time** Transistor Output 0 Off Time Sets the "OFF Delay" time for the digital outputs. This is the time between the disappearance of a condition and de-activation of the relay or transistor.	Units: Default: Min/Max:	Secs 0.0 –/+1000000.0	RW	Real

File	Group	No.	Display Name Full Name Description	Values		Read-Write	Data Type
FEEDBACK & I/O	Motor PTC	250	753 **PTC Cfg** Positive Temperature Coefficient Configuration Sets the action that will be taken when the PTC is indicating over temperature. "Ignore" (0) – No action is taken. "Alarm" (1) – Type 1 alarm indicated. "Flt Minor" (2) – Minor fault indicated. If running, drive continues to run. Enable with P950 [Minor Flt Cfg]. If not enabled, acts like a major fault. "FltCoastStop" (3) – Major fault indicated. Coast to Stop. "Flt RampStop" (4) – Major fault indicated. Ramp to Stop. "Flt CL Stop" (5) – Major fault indicated. Current Limit Stop.	Default: Options:	0 – Ignore 0 – Ignore 1 – Alarm 2 Flt Minor 3 FltCoastStop 4 Flt RampStop 5 Flt CL Stop	RW	32-bit Integer
		251	753 **PTC Sts** Positive Temperature Coefficient Status Status of the PTC.			RO	16-bit Integer

Options	Reserved	Reserved	Reserved	Reserved	Reserved	Reserved	Reserved	Reserved	Reserved	Reserved	Reserved	Reserved	Reserved	Over Temp	Reserved	PTC Ok
Default	0	0	0	0	0	0	0	0	0	0	0	0	0	0	0	0
Bit	15	14	13	12	11	10	9	8	7	6	5	4	3	2	1	0

0 = Condition False
1 = Condition True

Bit 0 "PTC Ok" – PTC is within the acceptable temperature range.
Bit 2 "Over Temp" – PTC is indicating over temperature

File	Group	No.	Display Name Full Name Description	Values	Read-Write	Data Type
FEEDBACK & I/O	Analog Inputs	255	753 **Anlg In Type** Analog Input Type Status of the analog input mode set by Jumper J4 on the main control board. Refer to the PowerFlex 750-Series AC Drives Installation Instructions, publication 750-IN001, for jumper locations and positions.		RO	16-bit Integer

Options	Reserved	Reserved	Reserved	Reserved	Reserved	Reserved	Reserved	Reserved	Reserved	Reserved	Reserved	Reserved	Reserved	Reserved	Reserved	Analog
Default	0	0	0	0	0	0	0	0	0	0	0	0	0	0	0	0
Bit	15	14	13	12	11	10	9	8	7	6	5	4	3	2	1	0

0 = Voltage Mode
1 = Current Mode

File	Group	No.	Display Name Full Name Description	Values		Read-Write	Data Type
FEEDBACK & I/O	Analog Inputs	256	**753 Anlg In Sqrt** Analog Input Square Root Enables/disables the square root function for each input.			RO	16-bit Integer

Options	Reserved	Reserved	Reserved	Reserved	Reserved	Reserved	Reserved	Reserved	Reserved	Reserved	Reserved	Reserved	Reserved	Reserved	Reserved	Analog 0
Default	0	0	0	0	0	0	0	0	0	0	0	0	0	0	0	0
Bit	15	14	13	12	11	10	9	8	7	6	5	4	3	2	1	0

0 = Square Root Disabled
1 = Square Root Enabled

		257	**753 Anlg In Loss Sts** Analog Input Loss Status Status of the analog input loss.			RO	16-bit Integer

Options	Reserved	Reserved	Reserved	Reserved	Reserved	Reserved	Reserved	Reserved	Reserved	Reserved	Reserved	Reserved	Reserved	Reserved	Loss 0	Reserved
Default	0	0	0	0	0	0	0	0	0	0	0	0	0	0	0	0
Bit	15	14	13	12	11	10	9	8	7	6	5	4	3	2	1	0

0 = Loss not Present
1 = Loss Present

		260	**753 Anlg In0 Value** Analog Input 0 Value Value of the Analog input after filter, square root, and loss action.	Units: Default: Min/Max:	Volt mA 0.000 Volts 0.000 mA –/+10.000 Volts 0.000 / 20.000 mA	RO	Real
		261	**753 Anlg In0 Hi** Analog Input 0 High Sets the highest input value to the analog input scaling block.	Units: Default: Min/Max:	Volt mA 10.000 Volts 20.000 mA –/+10.000 Volts 0.000 / 20.000 mA	RW	Real
		262	**753 Anlg In0 Lo** Analog Input 0 Low Sets the lowest input value to the analog input scaling block.	Units Default: Min/Max:	Volts mA 0.000 Volts 0.000 mA –/+10.000 Volts 0.000 / 20.000 mA	RW	Real
		263	**753 Anlg In0 LssActn** Analog Input 0 Loss Action Selects drive action when an analog signal loss is detected. Signal loss is defined as an analog signal less than 1V or 2mA. The signal loss event ends and normal operation resumes when the input signal level is greater than or equal to 1.5V or 3mA. "Ignore" (0) – No action is taken. "Alarm" (1) – Type 1 alarm indicated. "Flt Minor" (2) – Minor fault indicated. If running, drive continues to run. Enable with P950 [Minor Flt Cfg]. If not enabled, acts like a major fault. "FltCoastStop" (3) – Major fault indicated. Coast to Stop. "Flt RampStop" (4) – Major fault indicated. Ramp to Stop. "Flt CL Stop" (5) – Major fault indicated. Current Limit Stop. "Hold Input" (6) – Holds input at last value. "Set Input Lo" (7) – Sets input to P262 [Anlg In0 Lo]. "Set Input Hi" (8) – Sets input to P261 [Anlg In0 Hi].	Default: Options:	0 = "Ignore" 0 = "Ignore" 1 = "Alarm" 2 = "Flt Minor" 3 = "FltCoastStop" 4 = "Flt RampStop" 5 = "Flt CL Stop" 6 = "Hold Input" 7 = "Set Input Lo" 8 = "Set Input Hi"	RW	32-bit Integer

File	Group	No.	Display Name Full Name Description	Values		Read-Write	Data Type
FEEDBACK & I/O	Analog Inputs	264	753 **Anlg In0 Raw Val** Analog Input 0 Raw Value Raw Value of the analog input.	Units: Default: Min/Max:	Volt mA 0.000 Volts 0.000 mA –/+10.000 Volts 0.000 / 20.000 mA	RO	Real
		265	753 **Anlg In0 Filt Gn** Analog Input 0 Filter Gain Sets the analog input filter gain. The default setting represents no filtering.	Default: Min/Max:	1.00 –/+5.00	RW	Real
		266	753 **Anlg In0 Filt BW** Analog Input 0 Filter Bandwidth Sets the analog input filter bandwidth. The default setting represents no filtering.	Default: Min/Max:	0.0 0.0 / 500.0	RW	Real

File	Group	No.	Display Name Full Name Description	Values		Read-Write	Data Type
FEEDBACK & I/O	Analog Outputs	270	753 **Anlg Out Type** Analog Output Type Select the analog output mode for each analog output.			RW	16-bit Integer

Options	Reserved	Reserved	Reserved	Reserved	Reserved	Reserved	Reserved	Reserved	Reserved	Reserved	Reserved	Reserved	Reserved	Reserved	Reserved	Analog Out 0
Default	0	0	0	0	0	0	0	0	0	0	0	0	0	0	0	0
Bit	15	14	13	12	11	10	9	8	7	6	5	4	3	2	1	0

0 = Voltage Mode
1 = Current Mode

File	Group	No.	Display Name Full Name Description	Values		Read-Write	Data Type
		271	753 **Anlg Out Abs** Analog Output Absolute Selects whether the signed value or absolute value of a parameter is used before being scaled to drive the analog output.			RW	16-bit Integer

Options	Reserved	Reserved	Reserved	Reserved	Reserved	Reserved	Reserved	Reserved	Reserved	Reserved	Reserved	Reserved	Reserved	Reserved	Reserved	Analog Out 0
Default	0	0	0	0	0	0	0	0	0	0	0	0	0	0	0	0
Bit	15	14	13	12	11	10	9	8	7	6	5	4	3	2	1	0

0 = Signed
1 = Absolute

File	Group	No.	Display Name Full Name Description	Values		Read-Write	Data Type
		275	753 **Anlg Out0 Sel** Analog Output 0 Select Selects the source for the analog output.	Default: Min/Max:	3 0 / 159999	RW	32-bit Integer
		276	753 **Anlg Out0 Stpt** Analog Output 0 Setpoint A possible source for an analog output. Can be used to control an analog output from a communication device using a DataLink. Not affected by analog output scaling.	Units: Default: Min/Max:	Volt mA 0.000 Volts 0.000 mA –10/20 Volts 0.000 / 20.000 mA	RW	Real
		277	753 **Anlg Out0 Data** Analog Output 0 Data Displays the value of the source selected by P275 [Anlg Out0 Sel].	Default: Min/Max:	0 –/+100000	RO	Real
		278	753 **Anlg Out0 DataHi** Analog Output 0 Data High Sets the high value for the data range of analog out scale.	Units: Default: Min/Max:	pu 1.00 –/+214748000.00	RW	Real

File	Group	No.	Display Name Full Name Description	Values		Read-Write	Data Type
FEEDBACK & I/O	Analog Outputs	279	753 **Anlg Out0 DataLo** Analog Output 0 Data Low Sets the low value for the data range of analog out scale.	Default: Min/Max:	0.00 –/+214748000.00	RW	Real
		280	753 **Anlg Out0 Hi** Analog Output 0 High Sets the high value for the analog output value when the data value is at its maximum.	Units: Default: Min/Max:	Volt mA 10.000 Volts 20.000 mA –/+10.000 Volts 0.000 / 20.000 mA	RW	Real
		281	753 **Anlg Out0 Lo** Analog Output 0 Low Sets the low value for the analog output value when the data value is at its minimum.	Units: Default: Min/Max:	Volt mA 0.000 Volts 0.000 mA –/+10.000 Volts 0.000 / 20.000 mA	RW	Real
		282	753 **Anlg Out0 Val** Analog Output 0 Value Displays the analog output value.	Units: Default: Min/Max:	Volt mA 10.000 Volts 20.000 mA –/+10.000 Volts 0.000 / 20.000 mA	RO	Real

File	Group	No.	Display Name Full Name Description	Values		Read-Write	Data Type
FEEDBACK & I/O	R0 Predict Main	285	753 **R0 PredMaint Sts** Relay Output Predictive Maintenance Status Status of relay 0 predictive maintenance. When the condition of the bit = 1, the predicted relay life has elapsed.			RO	16-bit Integer
		286	753 **R00 Load Type** Relay Output 0 Load Type Sets the type of load that will be applied to the relay. Must be properly set for the Predictive Maintenance function to predict the relay life.	Default: Options:	1 = "DC Inductive" 0 = "DC Resistive" 1 = "DC Inductive" 2 = "AC Resistive" 3 = "AC Inductive"	RW	32-bit Integer
		287	753 **R00 Load Amps** Relay Output 0 Load Amps Load current that will be applied to the relay contacts. Must be properly set for the Predictive Maintenance function to approximate the relay life.	Units: Default: Min/Max:	Amps 2.000 0.000 / 2.000	RW	Real
		288	753 **R00 TotalLife** Relay Output 0 Total Life Total life cycles of the relay based on programmed load type and amps.	Units: Default: Min/Max:	Cycl 0 0 / 2147483647	RO	32-bit Integer
		289	753 **R00 ElapsedLife** Relay Output 0 Elapsed Life Non-resettable, total accumulated cycles of the relay.	Units: Default: Min/Max:	Cycl 0 0 / 2147483647	RO	32-bit Integer
		290	753 **R00 RemainLife** Relay Output 0 Remaining Life The difference between the Total Life and the Elapsed Life.	Units: Default: Min/Max:	Cycl 0 –/+2147483647	RO	32-bit Integer
		291	753 **R00 LifeEvntLvl** Relay Output 0 Life Event Level Sets the percentage of relay life cycles before action is taken.	Units: Default: Min/Max:	% 80.000 0.000 / 100.000	RW	Real
		292	753 **R00 LifeEvntActn** Relay Output 0 Life Event Action Sets the action that will be taken when the percentage of relay life cycles has been reached. "Ignore" (0) – No action is taken. "Alarm" (1) – Type 1 alarm indicated. "Flt Minor" (2) – Minor fault indicated. If running, drive continues to run. Enable with P950 [Minor Flt Cfg]. If not enabled, acts like a major fault. "FltCoastStop" (3) – Major fault indicated. Coast to Stop. "Flt RampStop" (4) – Major fault indicated. Ramp to Stop. "Flt CL Stop" (5) – Major fault indicated. Current Limit Stop.	Default: Options:	1 = "Alarm" 0 = "Ignore" 1 = "Alarm" 2 = "Flt Minor" 3 = "FltCoastStop" 4 = "Flt RampStop" 5 = "Flt CL Stop"	RW	32-bit Integer

Options	Master	Reserved	Reserved	Reserved	Reserved	Reserved	Reserved	Reserved	Reserved	Reserved	Reserved	Reserved	Reserved	Reserved	Reserved	Relay Out 0
Default	0	0	0	0	0	0	0	0	0	0	0	0	0	0	0	0
Bit	15	14	13	12	11	10	9	8	7	6	5	4	3	2	1	0

0 = Condition False
1 = Condition True

Drive (Port 0) Cfg File

File	Group	No.	Display Name Full Name Description	Values		Read-Write	Data Type
DRIVE CFG	Preferences	300	**Speed Units** Speed Units Selects the units to be used for all speed related parameters. This parameter is only reset when Set Defaults "All" (not recommended) is executed.	Default: Options:	Current Selection 0 = "Hz" 1 = "RPM"	RW	32-bit Integer
		301	**Access Level** Access Level Sets the access level for parameters and option choices. "Basic" (0) – Provides the smallest, simplest, and most user friendly view. "Advanced" (1) – May be required to use advanced features. "Expert" (2) – Not normally recommended (makes the list very long), and shows extra parameters that should rarely be required. When the access level is changed, PC-based tools (for example Drive Tools and Drive Explorer) will require a reconnect. This parameter is only reset when Set Defaults "All" (not recommended) is executed.	Default: Options:	Current Selection 0 = "Basic" 1 = "Advanced" 2 = "Expert"	RW	32-bit Integer
		302	**Language** Language Select display language. This parameter is only reset when Set Defaults "All" (not recommended) is executed.	Default: Options:	0 = "Not Selected" 0 = "Not Selected" 1 = "English" 2 = "French" 3 = "Spanish" 4 = "Italian" 5 = "German" 6 = "Japanese" 7 = "Portuguese" 8 = "Chinese" 9 = "Reserved" 10 = "Reserved" 11 = "Korean"	RW	32-bit Integer

File	Group	No.	Display Name Full Name Description	Values		Read-Write	Data Type
DRIVE CFG	Control Cfg	305	**Voltage Class** Voltage Class Selects the voltage class operation of the drive. For 400 / 480V drives "Low Voltage" = 400V and "High Voltage" = 480V. This setting affects how the drive will appear as a node on a system (400V or 480V), and also affects the drive's current rating, parameter 21 [Rated Amps]. If the setting of this parameter is changed, check the setting of P422 [Current Limit 1] and 423 [Current Limit 2]. This parameter is only reset (to original factory setting) when Set Defaults "All" (not recommended) is executed.	Default: Options:	0 = Based on Factory Setting 0 = "Low Voltage" 1 = "High Voltage"	RW	32-bit Integer
		306	**Duty Rating** Duty Rating Selects the continuous and overload capacity of the drive. "Normal Duty" (0) – Provides the highest continuous rating, but smaller overload ratings (110% for 60 seconds, 150% for 3 seconds). "Heavy Duty" (1) – Provides a smaller continuous rating, but larger overload ratings (150% for 60 seconds, 180% for 3 seconds). "Light Duty" (2) – Only used by Frame 8 drives and larger, provides an overload rating of 110% for 60 seconds. If the setting of this parameter is changed, check the setting of P422 [Current Limit 1] and 423 [Current Limit 2]. This parameter is only reset when Set Defaults "All" (not recommended) is executed. For Frame 2 drives rated under 7.5 kW (10 Hp) this parameter only displays the normal duty rating but will have heavy duty overload ratings. Changing the setting of this parameter will limit the motor current rating so the drive can supply this overload for the motor.	Default: Options:	0 = "Normal Duty" 0 = "Normal Duty" 1 = "Heavy Duty" 2 = "Light Duty" 755 (8+)	RW	32-bit Integer
		308	**Direction Mode** Direction Mode Selects method for changing direction. Mode – Direction Change Unipolar – Drive Logic (Forward/Reverse bit.) Bipolar – Sign of Reference Rev Disable – Not Changeable **ATTENTION:** Enabling the Bipolar Direction Mode can cause unexpected direction changes. Equipment damage and/or personal injury can result if this parameter is used in an inappropriate application. Do Not use this function without considering all applicable local, national, and international codes standards, regulations, or industry guidelines.	Default: Options:	0 = "Unipolar" 0 = "Unipolar" 1 = "Bipolar" 2 = "Rev Disable"	RW	32-bit Integer

File	Group	No.	Display Name Full Name Description	Values		Read-Write	Data Type
DRIVE CFG	Control Cfg	**309** **310** **311** **312**	**SpdTrqPsn Mode A** **SpdTrqPsn Mode B** **SpdTrqPsn Mode C** **SpdTrqPsn Mode D** Speed Torque Position Mode A, B, C, D Applies only to the Flux Vector control modes in P35 [Motor Ctrl Mode], options 3 "Induction FV," 6 "PM FV," and 10 "IPM FV." It selects between speed regulation, torque regulation, or position regulation operation of the drive. The source of P685 [Selected Trq Ref] will be determined by the selection in this parameter when P181 [DI SpTqPs Sel 0] and P182 [DI SpTqPs Sel 1] have selected "Disabled" or selected bits that are logic low. In P935 [Drive Status 1] three bits are provided that indicate the regulation mode of the drive when it is running. Bit 21 "Speed Mode" will become set when the drive is running with the speed regulator active. Similarly, Bit 22 "PositionMode" and Bit 23 "Torque Mode" indicate when their respective regulation modes are active. Under some conditions, the active torque mode may be forced into speed mode regardless of the setting of Speed/Torque/Position. The P313 [Actv SpTqPs Mode] parameter will indicate this and will reflect the mode selection that is in use. Possible selections for Speed/Torque/Position are: "Zero Torque" (0) – Drive operates as a torque regulator with P685 [Selected Trq Ref] forced to a constant value of zero torque. "Speed Reg" (1) – Drive operates as a speed regulator. P685 [Selected Trq Ref] comes from P660 [SReg Output] plus P699 [Inertia Comp Out]. "Torq Reg" (2) – Drive operates as a torque regulator. P685 [Selected Trq Ref] comes from P4 [Commanded Trq]. Under some conditions such as jogging or performing a ramp to stop operation, the drive will automatically bypass this selection and temporarily switch to speed regulation mode. "SLAT Min" (3) – Drive operates in "Speed Limited Adjustable Torque – Minimum select" mode. This is a special mode of operation used primarily in web handling applications. The drive will typically operate as a torque regulator, provided that the P4 [Commanded Trq] value is algebraically smaller in value than the speed regulator's output. The drive may automatically enter speed regulation mode, based on conditions within the speed regulator and the magnitude of the speed regulator's output relative to the torque reference. "SLAT Max" (4) – Drive operates in "Speed Limited Adjustable Torque – Maximum select" mode. This is a special mode of operation used primarily in web handling applications. The drive will typically operate as a torque regulator, provided that the P4 [Commanded Trq] value is algebraically larger in value than the speed regulator's output. The drive may automatically enter speed regulation mode, based on conditions within the speed regulator and the magnitude of the speed regulator's output relative to the torque reference. "Sum" (5) – Drive operates as a speed regulator. P685 [Selected Trq Ref] comes from P660 [SReg Output] plus torque adders summed with P4 [Commanded Trq]. "Profilier" (6) – Drive uses the Speed Profiler / Position Indexer function. The drive operates as either a speed or position regulator. Mode of operation will depend on the configuration of the Step Types in the Profiler / Indexer table. See page 429. "Psn PTP" (7) – Drive operates as a position regulator. P685 [Selected Trq Ref] has the same source as in Sum mode. The position control is active in Point-to-Point mode and uses its Point-to-point position reference. To jog in the Position mode, set P635 [Spd Options Ctrl] Bit 6. "Psn Camming" (8) – Drive operates as a position regulator. P685 [Selected Trq Ref] has the same source as in Sum mode. The position control is active in Position CAM mode and uses its PCAM Planner position and speed reference. "Psn PLL" (9) – Drive operates as a position regulator. P685 [Selected Trq Ref] has the same source as in Sum mode. The position control is active in Position Phase Lock Loop mode and uses its PLL Planner position and speed reference. "Psn Direct" (10) – Drive operates as a position regulator. P685 [Selected Trq Ref] has the same source as in Sum mode. The position control is active in Direct mode and uses its Direct Position Reference. "Psn SpdlOrnt" (11) – Drive operates in the positioning mode to position the load side of a machine to P1582 [S0 Setpoint]	Default: Options: 1 = "Speed Reg" 0 = "Zero Torque" 1 = "Speed Reg" (1) 2 = "Torque Reg" 3 = "SLAT Min" 4 = "SLAT Max" 5 = "Sum" 6 = "Profilier" 755 7 = "Psn PTP" 8 = "Psn Camming" 755 9 = "Psn PLL" 755 10 = "Psn Direct" 11 = "Psn SpdlOrnt" 755 (1) All options, except "Speed Reg," require the drive to be set to a Flux Vector motor control mode. See P35 [Motor Ctrl Mode].	RW	32-bit Integer

File	Group	No.	Display Name Full Name Description	Values		Read-Write	Data Type
DRIVE CFG	Control Cfg	**313**	**Actv SpTqPs Mode** Active Speed Torque Position Mode Displays the Speed, Torque, Position Mode that is active, based on the dynamic selection of modes A, B, C, and D, per P309. . .P312, and digital input conditions programmed via P181 and P182. In some cases, such as operation in the SLAT min/max modes, the final regulation mode may be forced into Speed Regulation. Refer to the Speed, Torque, and Position mode bits in P935 [Drive Status 1] that indicate the final regulation mode of the drive when it is running.	Default: Options:	1 = "Speed Reg" 0 = "Zero Torque" 1 = "Speed Reg" 2 = "Torque Reg" 3 = "SLAT Min" 4 = "SLAT Max" 5 = "Sum" 6 = "Profilier" 755 7 = "Psn PTP" 8 = "Psn Camming" 755 9 = "Psn PLL" 755 10 = "Psn Direct" 11 = "Psn SpdlOrnt" 755	RO	32-bit Integer
		314	**SLAT Err Stpt** Speed Limited Adjustable Torque, Error Setpoint Sets the magnitude of P641 [Speed Error] at which the SLAT function will release its Forced Speed Mode signal. This condition must exist for the time specified by P315 [SLAT Dwell Time]. Once released, the drive can operate as a torque regulator, depending on the relative levels of P660 [SReg Output] and P4 [Commanded Trq]. This parameter will be entered in units of Hz or RPM, depending on the value of P300 [Speed Units].	Units: Default: Min/Max:	Hz RPM 0.00 0.00 / P27 [Motor NP Hertz] 0.00 / P28 [Motor NP RPM]	RW	Real
		315	**SLAT Dwell Time** Speed Limited Adjustable Torque, Dwell Time Sets the time period that P641 [Speed Error] must exceed the P314 [SLAT Err Stpt] magnitude in order to return to min/max torque mode.	Units: Default: Min/Max:	Secs 0.00 0.00 / 2.00	RW	Real
		321	**Prchrg Control** Precharge Control When disabled, the drive will stay in the precharge mode and will not be able to run. When enabled, the normal precharge operation is run. This parameter allows programmable control of the completion of the precharge function and may be used to coordinate the precharge of a system of drives or to reset P12 [DC Bus Memory] in the drive.	Default: Options:	1 = "Enabled" 0 = "Disabled" 1 = "Enabled"	RW	32-bit Integer
		322	**Prchrg Delay** Precharge Delay Adjustable delay between the time all other precharge conditions have been met and the time the drive leaves the precharge state. This can be used to control the sequences of precharge completion in a drive system.	Units: Default: Min/Max:	Secs 0.50 0.10 / 30.00	RW	Real
		323	**Prchrg Err Cfg** Precharge Error Confirguration Selects the action to take when P190 [DI Prchrg Seal] is used to indicate that an external precharge circuit has opened.	Default: Options:	3 = "FltCoastStop" 3 = "FltCoastStop" 4 = "Flt RampStop" 5 = "Flt CL Stop"	RW	32-bit Integer

File	Group	No.	Display Name Full Name Description	Values	Read-Write	Data Type
DRIVE CFG	Auto Manual Ctrl	324	**Logic Mask** Logic Mask Enables/disables ports to control the logic command (such as start and direction). Does not mask Stop commands.		RW	16-bit Integer
		325	**Auto Mask** Automatic Mask Enables/disables ports to control the logic command (such as start and direction), while in Auto mode. Does not mask Stop commands.		RW	16-bit Integer
		326	**Manual Cmd Mask** Manual Command Mask Relinquishes exclusive control and allows other ports to begin jogging or to change direction while the port is in the Manual mode.		RW	16-bit Integer
		327	**Manual Ref Mask** Manual Reference Mask Enables/disables ports to control the speed reference while in Manual Mode. When a port is commanding manual mode, the reference is forced to the commanding port if the respective bit in this parameter is set. If an alternate speed reference source is desired, use P328 [Alt Man Ref Sel] to select the source.		RW	16-bit Integer
		328	**Alt Man Ref Sel** Alternate Manual Reference Select Provides a way to select a speed reference source when in manual mode, that is different than the port which is actuating the manual request. Specifies the port to be used for the reference. The default setting (0) results in the actuating port being the one that is used for the manual reference.	Default: 0 Min/Max: 0 / 159999	RW	32-bit Integer

324 Logic Mask

Options	Reserved	Port 14	Port 13	Reserved	Port 11 (1)	Port 10 (1)	Port 9	Port 8	Port 7	Port 6	Port 5	Port 4	Port 3	Port 2	Port 1	Digital In
Default	0	1	1	0	1	1	1	1	1	1	1	1	1	1	1	1
Bit	15	14	13	12	11	10	9	8	7	6	5	4	3	2	1	0

0 = Disabled
1 = Enabled

(1) 755 Frame 8 drives and larger only.

325 Auto Mask

Options	Reserved	Port 14	Port 13 (1)	Reserved	Reserved	Reserved	Reserved	Reserved	Reserved	Port 6	Port 5	Port 4	Port 3	Port 2	Port 1	Digital In
Default	0	1	1	0	0	0	0	0	0	1	1	1	1	1	1	1
Bit	15	14	13	12	11	10	9	8	7	6	5	4	3	2	1	0

0 = Disabled
1 = Enabled

(1) 755 drives only.

326 Manual Cmd Mask

Options	Reserved	Port 14	Port 13 (1)	Reserved	Reserved	Reserved	Reserved	Reserved	Reserved	Port 6	Port 5	Port 4	Port 3	Port 2	Port 1	Digital In
Default	0	1	1	0	0	0	0	0	0	1	1	1	1	1	1	1
Bit	15	14	13	12	11	10	9	8	7	6	5	4	3	2	1	0

0 = Disabled
1 = Enabled

(1) 755 drives only.

327 Manual Ref Mask

Options	Reserved	Port 14	Port 13	Reserved	Reserved	Reserved	Reserved	Reserved	Reserved	Port 6	Port 5	Port 4	Port 3	Port 2	Port 1	Digital In
Default	0	0	0	0	0	0	0	0	0	0	0	0	1	1	1	1
Bit	15	14	13	12	11	10	9	8	7	6	5	4	3	2	1	0

0 = Disabled
1 = Enabled

File	Group	No.	Display Name Full Name Description	Values		Read-Write	Data Type
DRIVE CFG	Auto Manual Ctrl	329	**Alt Man Ref AnHi** Alternate Manual Reference Analog High Hi scale for the alternate manual speed reference when P328 [Alt Man Ref Sel] is connected to an Analog Input.	Units: Default: Min/Max:	Hz RPM P520 P521 / P520	RW	Real
		330	**Alt Man Ref AnLo** Alternate Manual Reference Analog Low Lo scale for the alternate manual speed reference when P328 [Alt Man Ref Sel] is connected to an Analog Input.	Units: Default: Min/Max:	Hz RPM 0 P521 / P520	RW	Real
		331	**Manual Preload** Manual Preload			RW	16-bit Integer

Enables/disables automatic preloading of the "Auto" speed reference into a HIM when the HIM has been granted Manual control while in Auto mode. See P935 [Drive Status 1] Bit 9 "Manual" to verify the operating condition of the drive. **Important:** Preload will only occur if the transfer from auto to manual is done while the drive is running.

Options	Reserved	Reserved	Reserved	Reserved	Reserved	Reserved	Reserved	Reserved	Reserved	Reserved	Reserved	Reserved	Port 3	Port 2	Port 1	Reserved
Default	0	0	0	0	0	0	0	0	0	0	0	0	0	0	0	0
Bit	15	14	13	12	11	10	9	8	7	6	5	4	3	2	1	0

0 = Disabled
1 = Enabled

File	Group	No.	Display Name Full Name Description	Values		Read-Write	Data Type
DRIVE CFG	Drive Memory	336	**Reset Meters** Reset Meters Resets selected meters to zero. The value will automatically be returned to 0. "MWH and kWh" (1) – Resets P13 [Elapsed MWH], P14 [Elapsed kWH], P16 [Elpsd Mtr MWHrs], P17 [Elpsd Rgn MWHrs], P18 [Elpsd Mtr kWHrs], and P19 [Elpsd Rgn kWHrs]. "Elapsed Time" (2) – Resets P15 [Elapsed Run Time].	Default: Options:	0 = "Ready" 0 = "Ready" 1 = "MWH and kWh" 2 = "Elapsed Time"	RW	32-bit Integer

File	Group	No.	Display Name Full Name Description	Values		Read-Write	Data Type
DRIVE CFG	Start Features	338	**AutoClrFlt Tries** Auto Clear Fault Tries Number of attempts to execute a Clear faults on an auto-clearable fault when the drive is STOPPED. Exceeding this count results in a fault based on bit 1 of [Auto Retry Fault]. A value of '0' disables the function. See Table 10, Drive Fault and Alarm Types, Descriptions, and Actions, for faults that apply.	Units Default Min/Max Active State	None 0 0/9 Running or Idle	RW	32-bit Integer
		339	**AutoClrFlt Delay** Auto Clear Fault Delay Time delay between when auto-clearable fault occurs and when it is auto-cleared.	Units Default Min/Max Active State	Secs 30.0 0.5/864000.0 (10 days) Running or Idle	RW	Real
		340	**AutoClrCntrDelay** Auto Clear Control Delay Time delay after an auto clear fault, where if no further auto-clearable faults are detected & this delay expires, the running Retries counter is cleared. A START performs the same action	Units Default Min/Max Active State	Secs 300.0 (5 minutes) 0.1/86400.0 (10 days) Running or Idle	RW	Real
		343	**Rstrt Cntr Delay** Restart Control Delay Time delay after an Auto Restart, where if no further Auto restarts were performed & this delay expires, the running Retries counter is cleared	Units Default Min/Max Active State	None 300 (5 minutes) 0.1/864000.0 (10 days) Running or Idle	RW	Real

File	Group	No.	Display Name Full Name Description	Values		Read-Write	Data Type
DRIVE CFG	Start Features	345	**Start At PowerUp** Start At Power Up Enables/disables a feature to issue a Run command and automatically resume running at commanded speed after drive input power is restored. Requires a digital input, P163 [DI Run], P164 [DI Run Forward], or P165 [DI Run Reverse], is configured for Run and a valid start contact.	Default: Options:	0 = "Disabled" 0 = "Disabled" 1 = "Enabled"	RW	32-bit Integer
		346	**PowerUp Delay** Power Up Delay Defines the programmed delay time, in seconds, before a start command is accepted after power up.	Units: Default: Min/Max:	Secs 0.00 0.00 / 10800.00	RW	Real
		347	**Auto Retry Fault** Automatic Retry Fault When set and the "Auto-Clear faults Retries" have been exhausted, a fault is logged in the Fault queue. If the fault condition remains after the amount of time specified in P348 [Auto Rstrt Tries] elapses, an F33 "AuRsts Exhausted" fault occurs.			RW	16-bit Integer
		348	**Auto Rstrt Tries** Automatic Restart Tries Sets the maximum number of times the drive attempts to reset a fault and restart. See Table 10, Drive Fault and Alarm Types, Descriptions, and Actions, for faults that apply.	Default: Min/Max:	0 (Disabled) 0 / 9	RW	32-bit Integer
		349	**Auto Rstrt Delay** Automatic Restart Delay Sets the time between restart attempts when 348 [Auto Rstrt Tries] is set to a value other than zero.	Units: Default: Min/Max:	Secs 1.00 0.50 / 30.00	RW	Real



ATTENTION: Equipment damage and/or personal injury may result if this parameter is used in an inappropriate application. Do not use this function without considering applicable local, national and international codes, standards, regulations or industry guidelines.

Options	Reserved	Reserved	Reserved	Reserved	Reserved	Reserved	Reserved	Reserved	Reserved	Reserved	Reserved	Reserved	Reserved	Reserved	AutClrAttExh	AttmpsExhstd
Default	0	0	0	0	0	0	0	0	0	0	0	0	0	0	0	0
Bit	15	14	13	12	11	10	9	8	7	6	5	4	3	2	1	0

0 = Condition False
1 = Condition True

Bit 0 - "AttmpsExhstd" - Enables the Retries Exhausted Fault action. If the fault condition remains after the amount of time specified in P348 [Auto Rstrt Tries] elapses, an F33 "AutoRstsExhausted" fault occurs.

Bit 1 – AutClrAttExh (Auto clr flts) Enables Auto Clear Fault Exhausted fault action. If the fault condition remains after the amount of time specified in P338 [AutoClrFlt Tries] elapses, an F34 'AutClrFltExhaust' fault occurs.



ATTENTION: Equipment damage and/or personal injury may result if this parameter is used in an inappropriate application. Do not use this function without considering applicable local, national and international codes, standards, regulations or industry guidelines.

File	Group	No.	Display Name Full Name Description	Values		Read-Write	Data Type
DRIVE CFG	Start Features	350	**Sleep Wake Mode** Sleep Wake Mode Enables/disables the Sleep/Wake function. **Important:** When enabled, the following conditions must be met: • A proper value must be programmed for 352 [Sleep Level] and 354 [Wake Level]. • A sleep / wake reference must be selected in 351 [SleepWake RefSel]. • At least one of the following must be programmed (and input closed) in P155 [DI Enable], P158 [DI Stop], P163 [DI Run], P164 [DI Run Forward], or P165 [DI Run Reverse].	Default: Options:	0 = "Disabled" 0 = "Disabled" 1 = "Direct" (Enabled) 2 = "Invert" (Enabled) (7)	RW	32-bit Integer

ATTENTION: Enabling the Sleep/Wake function can cause unexpected machine operation during the Wake mode. Equipment damage and/or personal injury can result if this parameter is used in an inappropriate application. Do Not use this function without considering the information below. In addition, all applicable local, national, and international codes, standards, regulations, or industry guidelines must be considered.

Conditions Required to Start Drive (1) (2) (3)

Input	After Power-Up	After a Drive Fault		After a Stop Command
		Reset by HIM or Software "Stop"	Reset by HIM, Network/Software, or Digital Input "Clear Faults"	HIM, Network/Software or Digital Input "Stop"
Stop(4)	Stop Closed Wake Signal New Start or Run Cmd.(5)	Stop Closed Wake Signal New Start or Run Cmd.(5)	Stop Closed Wake Signal	Stop Closed Wake Signal Direct Mode: SleepWake RefSel Signal > Sleep Level(7) Invert Mode: SleepWake RefSel Signal < Sleep Level(8) New Start or Run Command(5)
Enable	Enable Closed Wake Signal	Enable Closed Wake Signal New Start or Run Cmd.(5)	Enable Closed Wake Signal	Enable Closed Wake Signal Direct Mode: SleepWake RefSel Signal > Sleep Level(7) Invert Mode: SleepWake RefSel Signal < Sleep Level(8) New Start or Run Command(5)
Run Run Fwd Run Rev	Run Closed Wake Signal	New Run Cmd.(6) Wake Signal	Run Closed Wake Signal	New Run Command Direct Mode: SleepWake RefSel Signal > Sleep Level(7) Invert Mode: SleepWake RefSel Signal < Sleep Level(8)

(1) When power is cycled, if all conditions are present after power is restored, restart will occur.
(2) If all conditions are present when [Sleep-Wake Mode] is "enabled," the drive will start.
(3) The active speed reference. The Sleep/Wake function and the speed reference may be assigned to the same input.
(4) Cannot use P159 [DI Cur Lmt Stop] or P160 [DI Coast Stop] as the only Stop Input. This will cause the drive to go into a Sleep Cfg Alarm - Event No. 161.
(5) Command must be issued from HIM, terminal block, or network.
(6) Run Command must be cycled.
(7) SleepWake Ref Sel signal does not need to be greater than the wake level.
(8) SleepWake Ref Sel signal does not need to be less than the wake level.

File	Group	No.	Display Name Full Name Description	Values		Read-Write	Data Type
DRIVE CFG	Start Features	351	**SleepWake RefSel** Sleep Wake Reference Select Selects the source of the input controlling the Sleep-Wake function.	Default: Min/Max:	0 (Disabled) 0 / 159999	RW	32-bit Integer
		352	**Sleep Level** Sleep Level Defines the analog input level that will stop the drive.	Units: Default: Min/Max:	Volt, P351 = 0 (Disabled) Volt or mA, P351 = not 0 (Port Device Jumper Setting) 5.00 Volt (P351 = 0) 5.00 Volt / 0.00 mA (Port *n* Device Jumper Setting) 0.00 / 10.00 Volt 0.00 / 20.00 mA	RW	Real
		353	**Sleep Time** Sleep Time Defines the amount of time at or below 352 [Sleep Level] before a Stop is issued.	Units: Default: Min/Max:	Secs 0.00 0.00 / 64800	RW	Real
		354	**Wake Level** Wake Level Defines the analog input level that will start the drive.	Units: Default: Min/Max:	Volt, P351 = 0 (Disabled) Volt or mA, P351 = not 0 (Port *n* Device Jumper Setting) 6.00 Volt (P351 = 0) 6.00 Volt / 12.00 mA (Port *n* Device Jumper Setting) 0.00 / 10.00 Volt 0.00 / 20.00 mA	RW	Real
		355	**Wake Time** Wake Time Defines the amount of time at or above 354 [Wake Level] before a Start is issued.	Units: Default: Min/Max:	Secs 0.00 0.00 / 64800	RW	Real
		356	**FlyingStart Mode** Flying Start Mode Enables/disables the function which reconnects to a spinning motor at actual RPM when a start command is issued. Functional in all motor control modes. "Enhanced" (1) – This advanced mode performs the reconnect function quickly. "Sweep" (2) – This frequency sweep mode is used with output sine filters. "Sweep 2" (3) - This frequency sweep mode is used with motor frequencies above 120 Hz.	Default: Options:	0 = "Disabled" 0 = "Disabled" 1 = "Enhanced" 2 = "Sweep" 3 = "Sweep 2"	RW	32-bit Integer
		357	**FS Gain** Flying Start Gain P356 [FlyingStart Mode] = 1 "Enhanced": Proportional term used in the current regulator which controls the reconnect function. P356 [FlyingStart Mode] = 2 "Sweep": Time required for the speed detection signal to remain at the programmed level (P360). Units of 50 µs.	Default: Min/Max:	1200.0 0.0 / 10000.0	RW	Real
		358	**FS Ki** Flying Start Intergal Gain P356 [FlyingStart Mode] = 1 "Enhanced": Integral term used in the current regulator which controls the reconnect function. P356 [FlyingStart Mode] = 2 "Sweep": Integral term used in the voltage recovery to the normal V/Hz level.	Default: Min/Max:	60.0 0.0 / 1000.0	RW	Real
		359	**FS Speed Reg Ki** Flying Start Speed Regulator Integral Gain P356 [FlyingStart Mode] = 1 "Enhanced": Integral term used in the speed regulator which controls the reconnect function. P356 [FlyingStart Mode] = 2 "Sweep": Time to sweep frequency in one direction. Units of 10 µs.	Default: Min/Max:	100.0 0.0 / 10000.0	RW	Real

File	Group	No.	Display Name Full Name Description	Values		Read-Write	Data Type
		360	**FS Speed Reg Kp** Flying Start Speed Regulator Proportional Gain P356 [FlyingStart Mode] = 1 "Enhanced": Proportional term used in the speed regulator which controls the reconnect function. P356 [FlyingStart Mode] = 2 "Sweep": Programmed level for the speed detection signal. The monitored signal needs to drop below this level to indicate motor speed.	Default: Min/Max:	75.0 0.0 / 100000.0	RW	Real
DRIVE CFG	Start Features	**361**	**FS Excitation Ki** Flying Start Excitation Integral Gain P356 [FlyingStart Mode] = 1 "Enhanced": Integral term used in the current regulator which controls the excitation function when the need is determined by the reconnect function. P356 [FlyingStart Mode] = 2 "Sweep": Integral term used to control initial output voltage.	Default: Min/Max:	60.0 0.0 / 32767.0	RW	Real
		362	**FS Excitation Kp** Flying Start Excitation Proportional Gain P356 [FlyingStart Mode] = 1 "Enhanced": Proportional term used in the current regulator which controls the excitation function when the need is determined by the reconnect function. P356 [FlyingStart Mode] = 2 "Sweep": Proportional term used to control initial output voltage.	Default: Min/Max:	1200.00 0.0 / 32767.0	RW	Real
		363	**FS Reconnect Dly** Flying Start Reconnect Delay Delay time used between the issued start command and the start of the reconnect function.	Units: Default: Min/Max:	mSec 50.00 0.10 / 10000.00	RW	Real
		364	**FS Msrmnt CurLvl** Flying Start Measurement Current Level P356 [FlyingStart Mode] = 1 "Enhanced": Level of the current used during the measurement stage of the reconnect function. P356 [FlyingStart Mode] = 2 "Sweep": Adjustment for the V/Hz end point. Used to change the slope of the V/Hz curve during the frequency sweep. Note: A value of 4096 is equal to drive rated current.	Default: Min/Max:	44.97 0.00 / 4096.00	RW	Real
		365	**FS Brk Lvl** Flying Start Break Level Enter the level of DC braking current that the drive can use for the Flying Start function. The Flying Start function will apply DC brake current to the motor when it determines the motor is spinning near zero speed. It can do this to bring the motor to a complete stop before attempting to restart it.	Units: Default: Min/Max:	Amps Same as P394 Same as P394	RW	Real
		366	**FS Brk Time** Flying Start Break Time Enter the amount of time the drive can apply the DC braking current for the Flying Start function. The DC braking will be applied on every start when this time is not zero, even is flying start is not enabled.	Units: Default: Min/Max:	Secs 0.00 0.00 / 1800.00	RW	Real
		367	**FS ZSpd Thresh** Flying Start Zero Spd Threshold Enter a value to set the threshold the Flying Start function uses for zero speed detection. The Flying Start function uses this for DC braking.	Units: Default: Min/Max:	Secs 200.00 0.00 / 10000.00	RW	Real

File	Group	No.	Display Name Full Name Description	Values		Read-Write	Data Type
DRIVE CFG	Braking Features	**370** **371**	**Stop Mode A** **Stop Mode B** Stop Mode A, B Method of stopping the drive when a stop command is given. Normal Stop command and the RUN input changing from true to false will command a Normal Stop. When using TorqProve, parameter 1100 [Trq Prove Cfg] Bit 0 "TP Enable" = 1, the stop mode must be set to option 1 "Ramp." "Coast" (0) – Power removed from motor, motor coasts to zero. "Ramp" (1) – Decelerates to zero speed at the decel rate. Power is removed when zero speed is reached. "Ramp to Hold" (2) – Decelerates to zero speed at the decel rate, followed by DC braking until the next start sequence. "DC Brake" (3) – DC braking is immediately applied (does not follow programmed decel ramp). May have to adjust parameter 397 [DC Brake Kp]. "DCBrkAutoOff" (4) – Applies DC braking until zero speed is reached or DC brake time is reached, whichever is shorter. "Current Lmt" (5) – Max torque / current applied until zero speed. "Fast Brake" (6) – High slip braking for maximum braking performance above base speed.	Default Options:	1 = "Ramp" 0 = "Coast" 0 = "Coast" 1 = "Ramp" 2 = "Ramp to Hold" 3 = "DC Brake" 4 = "DCBrkAutoOff" 5 = "Current Lmt" 6 = "Fast Brake"	RW	32-bit Integer
		372 **373**	**Bus Reg Mode A** **Bus Reg Mode B** Bus Regulation Mode A, B Method and sequence of the DC bus regulator voltage. Choices are dynamic brake, frequency adjust or both. Sequence is determined by programming or digital input to the terminal block. Using options 1, 3, or 4, may result in extended decel times. Typically, only P372 [Bus Reg Mode A] is used. P373 [Bus Reg Mode B] is only used when P187 [DI PwrLoss ModeB] is programmed and its corresponding input is high. Dynamic Brake Setup If a dynamic brake resistor is connected to the drive, both of these parameters must be set to either option 2, 3 or 4. When using any of the dynamic braking settings increase P426 [Regen Power Lmt] from its default setting of 50%. A setting of 200% will result in more effective braking.	Default: Options:	1 = "Adjust Freq" 4 = "Both-Frq 1st" 0 = "Disabled" 1 = "Adjust Freq" 2 = "Dyn Brake" 3 = "Both DB 1st" 4 = "Both Frq 1st"	RW	32-bit Integer
			ATTENTION: The drive does not offer protection for externally mounted brake resistors. A risk of fire exists if external braking resistors are not protected. External resistor packages must be self-protected from over-temperature or the protective circuit shown in Figure 4 on page 372 (or equivalent) must be supplied.				
		374	**Bus Reg Lvl Cfg** Bus Regulation Level Configuration Selects the reference used to determine the bus voltage regulation level for the bus voltage regulator and the reference used for the dynamic brake. "Bus Memory" (0) – References are determined based on P12 [DC Bus Memory]. "BusReg Level" (1) – References are determined based on the voltage set in the bus regulator level parameter P375 [Bus Reg Level]. If coordinated operation of the dynamic brakes of a common bus system is desired, use this selection and set the P375 [Bus Reg Level] to coordinate the brake operation of the common bus drives.	Default: Options:	0 = "Bus Memory" 0 = "Bus Memory" 1 = "BusReg Level"	RW	32-bit Integer
		375	**Bus Reg Level** Bus Regulation Level Sets the "turn-on" bus voltage level for the bus voltage regulator and the dynamic brake.	Units: Default: Min/Max:	V DC P20 < 252V DC: 375 P20 = 252…503V DC: 750 P20 = 504…629V DC: 937 P20 > 629V DC: 1076 P20 < 252V DC: 375/389 P20 = 252…503V DC: 750/779 P20 = 504…629V DC: 937/974 P20 > 629V DC: 1076/1118	RW	Real

File	Group	No.	Display Name Full Name Description	Values		Read-Write	Data Type
DRIVE CFG	Braking Features	376	**Bus Limit Kp** Bus Limit Proportional Gain Not functional when any of the FV motor control modes are selected.	Units: Default: Min/Max:	A/V 1170.0 0.0 / 1000000.0	RW	Real
		377	**Bus Limit Kd** Bus Limit Derivative Gain Not functional when any of the FV motor control modes are selected.	Units: Default: Min/Max:	Secs 152.0 0.0 / 1000000.0	RW	Real
		378	**Bus Limit ACR Ki** Bus Limit Active Current Regulator Integral Gain Not functional when any of the FV motor control modes are selected.	Default: Min/Max:	2045.0 0.0 / 50000.0	RW	Real
		379	**Bus Limit ACR Kp** Bus Limit Active Current Regulator Proportional Gain Not functional when any of the FV motor control modes are selected.	Units: Default: Min/Max:	Hz/A 524.0 0.0 / 100000.0	RW	Real
		380	**Bus Reg Ki** Bus Regulator Integral Gain Integral gain for the bus voltage regulator. Sets the responsiveness of the bus voltage regulator.	Default: Min/Max:	100.000 0.000 / 65535.000	RW	Real
		381	**Bus Reg Kp** Bus Regulator Proportional Gain Proportional gain for the bus voltage regulator. Sets the responsiveness of the bus voltage regulator.	Default: Min/Max:	10.000 0.000 / 65535.000	RW	Real
		382	**DB Resistor Type** Dynamic Brake Resistor Type Selects whether the internal or external DB protection will be used. **Important:** Only one DB resistor can be connected to Frame 2 drives. If an external dynamic brake is used with a Frame 2 drive, the internal dynamic brake resistor must be disconnected. Connecting both an internal and external resistor is likely to cause drive damage. If a dynamic brake resistor is connected to the drive, P372 [Bus Reg Mode A] and P373 [Bus Reg Mode B] must be set to either option 2, 3, or 4; otherwise the dynamic brake will not turn on.	Default: Options:	0 = "Internal" 0 = "Internal" 1 = "External"	RW	32-bit Integer
			ATTENTION: Equipment damage may result if a drive mounted (internal) resistor is installed and this parameter is set to "External." Thermal protection for the internal resistor will be disabled, resulting in possible device damage. **ATTENTION:** The drive does not offer protection for externally mounted brake resistors. A risk of fire exists if external braking resistors are not protected. External resistor packages must be self-protected from over-temperature or the protective circuit shown in Figure 4 on page 372 (or equivalent) must be supplied.				
		383	**DB Ext Ohms** Dynamic Brake External Ohms Used to calculate the maximum negative torque available from the dynamic brake and is used for the external resistor dynamic brake protection.	Units: Default: Min/Max:	Ohms Based on Drive Rating Internal / 10000.00	RW	Real
		384	**DB Ext Watts** Dynamic Brake External Watts Sets the continuous rated power reference for the external dynamic brake resistor. Only valid when an external dynamic brake resistor is selected (P382 [DB Resistor Type] = 1 "External"). The DB continuous watts are used in the dynamic brake thermal protection algorithm. **Important:** If customer-supplied protection is to be used in place of the drive's calculated resistor thermal protection, set the [DB Ext Watts] to its maximum value.	Units: Default: Min/Max:	Watt 100.00 1.00 / 500000.00	RW	Real

File	Group	No.	Display Name Full Name Description	Values		Read-Write	Data Type
		385	**DB ExtPulseWatts** Dynamic Brake External Pulse Watts Sets the thermal transient response of the external dynamic brake resistor defined by the maximum allowable power to the dynamic brake resistor for 1 second without exceeding the resistor's element temperature. This parameter is only valid when an external dynamic brake resistor is selected (P382 [DB Resistor Type] = 1 "External"). If this value is not available from the resistor vendor it can be approximated by 1 or 2 below: 1. [DB ExtPulseWatts] = 75,000 x weight (lb), where weight is the weight of the resistor wire in pounds (not the weight of the entire resistor). 2. [DB ExtPulseWatts] = Time Constant x Brake Watts, where the Time Constant equals the amount of time to reach 63% of its rated temperature while the maximum power is applied to the resistor and Brake Watts is the maximum continuous power rating of the resistor. Many external resistor pulse watts settings are provided in the PowerFlex Dynamic Braking Resistor Calculator, publication PFLEX-AT001, or consult the resistor manufacturer for this specification. Note: If the value of this parameter is set equal to the value of P384 [DB Ext Watts], an F5 "Overvoltage" fault can occur. **Important:** If customer supplied protection is to be used in place of the drive's calculated resistor thermal protection, set the [DB ExtPulse Watts] to its maximum value. This information may show up on your resistor in Joules or Watt-seconds. Use that value in this parameter. Contact the resistor manufacturer if that information is not provided.	Units: Default: Min/Max:	Watt 2000.00 1.00 / 100000000.00	RW	Real

File	Group	No.	Display Name Full Name Description	Values		Read-Write	Data Type
DRIVE CFG	Braking Features	**388**	**Flux Braking En** Flux Braking Enable Enables/disables flux braking. Functional in all motor control modes. Does not work with permanent magnet motors. Flux braking is enabled during decel.	Default: Options:	0 = "Disabled" 0 = "Disabled" 1 = "Enabled"	RW	32-bit Integer
		389	**Flux Braking Lmt** Flux Braking Limit Sets the limit on the desired motor voltage during flux braking as a percent of P25 [Motor NP Volts]. Functional in all motor control modes.	Units: Default: Min/Max:	% 125.00 100.00 / 250.00	RW	Real
		390	**Flux Braking Ki** Flux Braking Integral Gain Flux braking controller integral gain Functional in all motor control modes.	Default: Min/Max:	10000.0 0.0 / 1000000.0	RW	Real
		391	**Flux Braking Kp** Flux Braking Proportional Gain Flux braking controller proportional gain. Functional in all motor control modes.	Units: Default: Min/Max:	V/A 100.0 0.0 / 1000000.0	RW	Real
		392	**Stop Dwell Time** Stop Dwell Time Stop dwell sets an adjustable delay time between detecting zero speed and disabling the speed and torque regulators, when responding to a stop command.	Default: Min/Max:	0 0 / 60	RW	Real
		393	**DC Brake Lvl Sel** DC Brake Level Select Sets link to source used for P394 [DC Brake Level]. Functional in all motor control modes.	Default: Min/Max:	394 1 / 159999	RW	32-bit Integer
		394	**DC Brake Level** DC Brake Level Defines the DC brake current level injected into the motor when P370/371 [Stop Mode *n*] = 3 "DC Brake." This also sets the braking current level when 6 "Fast Stop" is selected. The DC braking voltage used in this function is created by a PWM algorithm and may not generate the smooth holding force needed for some applications. Functional in all motor control modes.	Units: Default: Min/Max:	Amps [Rated Amps] P21 [Rated Amps] x 0.01 / Based on Drive Rating	RW	Real

ATTENTION: If a hazard of injury due to movement of equipment or material exists, an auxiliary mechanical braking device must be used.

ATTENTION: This feature should not be used with synchronous or permanent magnet motors. Motors may be demagnetized during braking.

File	Group	No.	Display Name Full Name Description	Values		Read-Write	Data Type
DRIVE CFG	Braking Features	**395**	**DC Brake Time** DC Brake Time Sets the amount of time DC brake current is "injected" into the motor. When the active stop mode, P370/371 [Stop Mode *n*] = 2 "Ramp to Hold," this parameter is ignored and DC braking is applied continuously. Functional in all motor control modes.	Units: Default: Min/Max:	Secs 0.00 0.00 / 90.00	RW	Real
		396	**DC Brake Ki** DC Brake Integral Gain Sets the integral term used in the current regulator which controls the DC Brake function. Functional in all motor control modes.	Default: Min/Max:	10.0 0.0 / 1000.0	RW	Real
		397	**DC Brake Kp** DC Brake Proportional Gain Sets the proportional term used in the current regulator which controls the DC Brake function.	Default: Min/Max:	1000.0 0.0 / 10000.0	RW	Real
		398	**DC Brk Vq Fltr** DC Brake Vq Filter Sets the level of filtering used on the Vq signal when the active stop mode P370/371 [Stop Mode *n*] = 4 "DCBrkAutoOff."	Default: Min/Max:	250.0 50.0 / 2000.0	RW	Real
		399	**DC Brk Vd Fltr** DC Brake Vd Filter Sets the level of filtering used on the Vd signal when the active stop mode P370/371 [Stop Mode *n*] = 4 "DCBrkAutoOff."	Default: Min/Max:	250.0 50.0 / 2000.0	RW	Real
		400	**Fast Braking Ki** Fast Braking Integral Gain Sets the integral term used in the speed regulator which controls the Fast Braking function. Functional in all motor control modes.	Default: Min/Max:	0.10 0.00 / 10.00	RW	Real
		401	**Fast Braking Kp** Fast Braking Proportional Gain Sets the proportional term used in the speed regulator which controls the Fast Braking function. Functional in all motor control modes.	Default: Min/Max:	0.0015 0.0000 / 10.0000	RW	Real
		402	**Brake Off Adj 1** Brake Off Adjustment 1 When Fast Braking is the selected Stop Mode, this parameter sets the power sensitivity to transition from Fast Braking to DC Brake. When DC Brake w/Auto ShutOff is selected, this parameter sets the level sensitivity for shut off.	Default: Min/Max:	1.00 0.01 / 5.00	RW	Real
		403	**Brake Off Adj 2** Brake Off Adjustment 2 When Fast Braking is the selected Stop Mode, this parameter sets the frequency sensitivity to transition from Fast Braking to DC Brake. When DC Brake w/Auto ShutOff is selected, this parameter sets the time sensitivity for shut off.	Default: Min/Max:	1.00 0.01 / 5.00	RW	Real
		409	**Dec Inhibit Actn** Deceleration Inhibit Action Configures the response to a Decel Inhibit condition, which occurs when the drive is not decelerating. One possible cause could be bus voltage regulation. "Ignore" (0) – No action is taken. "Alarm" (1) – Type 1 alarm indicated. "Flt Minor" (2) – Minor fault indicated. If running, drive continues to run. Enable with P950 [Minor Flt Cfg]. If not enabled, acts like a major fault. "FltCoastStop" (3) – Major fault indicated. Coast to Stop.	Default: Options:	3 = "FltCoastStop" 0 = "Ignore" 1 = "Alarm" 2 = "Flt Minor" 3 = "FltCoastStop"	RW	32-bit Integer

Drive (Port 0) Protection File

File	Group	No.	Display Name Full Name Description	Values		Read-Write	Data Type
PROTECTION	Motor Overload	**410**	**Motor OL Actn** Motor Overload Action Configures the response to a motor overload condition. If "Flt Minor" (2) is selected, enable P950 [Minor Flt Cfg] Bit 0. "Ignore" (0) – No action is taken. "Alarm" (1) – Type 1 alarm indicated. "Flt Minor" (2) – Minor fault indicated. If running, drive continues to run. Enable with P950 [Minor Flt Cfg]. If not enabled, acts like a major fault. "FltCoastStop" (3) – Major fault indicated. Coast to Stop. "Flt RampStop" (4) – Major fault indicated. Ramp to Stop. "Flt CL Stop" (5) – Major fault indicated. Current Limit Stop.	Default: Options:	3 = "FltCoastStop" 0 = "Ignore" 1 = "Alarm" 2 = "Flt Minor" 3 = "FltCoastStop" 4 = "Flt RampStop" 5 = "Flt CL Stop"	RW	32-bit Integer
		411	**Mtr OL at Pwr Up** Motor Overload At Power Up Selects the mode to use for initial value of the motor overload counter, upon drive power-up. "Assume Cold" (0) – P418 [Mtr OL Counts] will be reset to zero the next time the drive is powered up. "UseLastValue" (1) – The value of P418 [Mtr OL Counts] will be retained at power down and restored the next time the drive is powered up. "RealTimeClk" (2) – The value of P418 [Mtr OL Counts] begins to decrease at drive power down, reflecting the cooling of the motor, and stops at drive power-up or when zero is reached. This option is only available when the real time clock is active on the drive.	Default: Options:	0 = "Assume Cold" 0 = "Assume Cold" 1 = "UseLastValue" 2 = "RealTimeClk"	RW	32-bit Integer
		412	**Mtr OL Alarm Lvl** Motor Overload Alarm Level Sets the level of P418 [Mtr OL Counts] for which a motor overload alarm will occur. Useful to provide warning prior to the drive taking action that is selected by P410 [Motor OL Actn]. This alarm level is different than, and independent of, the "Alarm" action selected by P410 [Motor OL Actn].	Units: Default: Min/Max:	% 0.00 0.00 / 100.00	RW	Real
		413	**Mtr OL Factor** Motor Overload Factor Sets the minimum level of current (in percent or P26 [Motor NP Amps]) that causes the motor overload counter to increment. Current levels below this value will decrement the overload counter. For example, a service factor of 1.15 implies continuous operation up to 115% of nameplate motor current.	Default: Min/Max:	1.00 0.20 / 2.00	RW	Real
		414	**Mtr OL Hertz** Motor Overload Hertz Selects the output frequency below which the motor operating current is derated (more sensitive) to account for the reduced self-cooling capability of typical motors, operating at slower speeds. For motors with extra low speed cooling capacity (for example 10:1 or blower cooled), reduce this setting to take full advantage of the motor being used.	Units: Default: Min/Max:	Hz 20.00 0.00 / 4096.00	RW	Real
		415	**Mtr OL Reset Lvl** Motor Overload Reset Level Sets the level that resets a motor overload condition, and allows a fault (if selected as the motor overload action) to be manually reset.	Units: Default: Min/Max:	% 0.00 0.00 / 100.00	RW	Real
		416	**MtrOL Reset Time** Motor Overload Reset Time Displays the time it will take to restart the drive after a motor overload fault has occurred and the value in P418 [Mtr OL Counts] is less than the P415 [Mtr OL Reset Lvl].	Units: Default: Min/Max:	Secs 0.00 –/+99999.00	RW	Real

File	Group	No.	Display Name Full Name Description	Values		Read-Write	Data Type
PROTECTION	Motor Overload	418	**Mtr OL Counts** Motor Overload Counts Accumulated percentage of motor overload. Continuously operating the motor over 100% of the motor overload setting will increase this value to 100% and cause the action selected in P410 [Motor OL Actn] to be taken.	Units: Default: Min/Max:	% 0.00 0.00 / 100.00	RO	Real
		419	**Mtr OL Trip Time** Motor Overload Trip Time Displays the inverse of the motor overload time, equal to the number of seconds before P418 [Mtr OL Counts] reaches 100%, and the motor overload action is taken.	Units: Default: Min/Max:	Secs 99999 0 / 99999	RO	32-bit Integer

File	Group	No.	Display Name Full Name Description	Values		Read-Write	Data Type
PROTECTION	Load Limits	420	**Drive OL Mode** Drive Overload Mode Selects the action to take when the drive detects that it is being overloaded. Reducing current limit and / or PWM frequency may allow the drive to continue running without faulting. When using a sine wave output filter, set this parameter to 1 "Reduce CLmt" or 0 "Disabled."	Default: Options:	3 = "Both PWM 1st" 0 = "Disabled" 1 = "Reduce CLmt" 2 = "Reduce PWM" 3 = "Both PWM 1st"	RW	32-bit Integer
		421	**Current Lmt Sel** Current Limit Select Selects the source for the current limit value. When the load is large enough to cause current that equals or exceeds this value, the output frequency will automatically adjust (increase or decrease, as required) to attempt limiting the output current to this value.	Default: Options:	422 1 / 159999	RW	32-bit Integer
		422 423	**Current Limit 1** **Current Limit 2** Current Limit *n* Constant values that can be used as sources for P421 [Current Lmt Sel]. The value of these parameters should be checked if changes have been made to P305 [Voltage Class] and/or P306 [Duty Rating].	Units: Default: Min/Max:	Amps Based on Drive Rating Based on Drive Rating	RW	Real
		424	**Active Cur Lmt** Active Current Limit Displays the current that is actively being used, including the automatic foldback effect from the drive overload function (see P420 [Drive OL Mode]).	Units: Default: Min/Max:	Amps 0.00 –/+P21 [Rated Amps] x 8	RO	Real
		425	**Current Rate Lmt** Current Rate Limit Sets the largest allowable rate of change for the torque producing current reference (Iq). This number is scaled in percent of rated motor current for every 250 microseconds.	Units: Default: Min/Max:	% 400.00 1.00 / 800.00	RW	Real
		426	**Regen Power Lmt** Regenerative Power Limit Sets the limit for power flow from the motor to the drive (regenerating). Only active in Flux Vector (FV) control modes.	Units: Default: Min/Max:	% –50.00 –800.00 / 0.00	RW	Real
		427	**Motor Power Lmt** Motor Power Limit Sets the limit for power flow from the drive to the motor (motoring). Only active in Flux Vector (FV) control modes.	Units: Default: Min/Max:	% 200.00 0.00 / 800.00	RW	Real
		428	**Current Limit Kd** Current Limit Derivative Gain Derivative gain for the current limit function. This parameter is not functional when any of the FV motor control modes are selected.	Units: Default: Min/Max:	Secs 760.0 0.0 / 1000000.0	RW	Real
		429	**Current Limit Ki** Current Limit Integral Gain Integral gain for the current limit function. This parameter is not functional when any of the FV motor control modes are selected.	Default: Min/Max:	680.0 0.0 / 10000.0	RW	Real

File	Group	No.	Display Name Full Name Description	Values		Read-Write	Data Type
PROTECTION	Load Limits	430	**Current Limit Kp** Current Limit Proportional Gain Proportional gain for the current limit function. This parameter is not functional when any of the FV motor control modes are selected.	Units: Default: Min/Max:	Hz/A 290.0 0.0 / 1000000.0	RW	Real
		431	**Id Lo FreqCur Kp** Id Low Frequency Current Kp Current limit proportional gain active at very low operating frequencies. This parameter is not functional when any of the FV motor control modes are selected.	Units: Default: Min/Max:	V/A 50.0 0.0 / 100000.0	RW	Real
		432	**Iq Lo FreqCur Kp** Iq Low Frequency Current Kp Current limit proportional gain active at very low operating frequencies. This parameter is not functional when any of the FV motor control modes are selected.	Units: Default: Min/Max:	V/A 50.0 0.0 / 100000.0	RW	Real
		433	**Jerk Gain** Jerk Gain Allows you to adjust the amount of S Curve or "Jerk" applied to the Accel/Decel rate.	Default: Min/Max:	5200.0 0.0 / 1000000000.0	RW	Real
		434	**Shear Pin Cfg** Shear Pin Configure Configures operation of the shear pin function. Bit 0 "Shear1NoAcc" – 0 = Active during acceleration, 1 = Ignore during acceleration Bit 1 "Shear2NoAcc" – 0 = Active during acceleration, 1 = Ignore during acceleration			RW	16-bit Integer
		435 438	**Shear Pin 1 Actn** **Shear Pin 2 Actn** Shear Pin *n* Action Configures the action to take when the output current is greater than or equal to P436/439 [Shear Pin *n* Level] for the amount of time set in P437/440 [Shear Pin *n* Time]. These two independent shear pin functions can be set up to achieve the equivalent of external overloads that have "stall" and "jam" indication. "Ignore" (0) – No action is taken. "Alarm" (1) – Type 1 alarm indicated. "Flt Minor" (2) – Minor fault indicated. If running, drive continues to run. Enable with P950 [Minor Flt Cfg]. If not enabled, acts like a major fault. "FltCoastStop" (3) – Major fault indicated. Coast to Stop. "Flt RampStop" (4) – Major fault indicated. Ramp to Stop. "Flt CL Stop" (5) – Major fault indicated. Current Limit Stop.	Default: Options:	0 = "Ignore" 0 = "Ignore" 1 = "Alarm" 2 = "Flt Minor" 3 = "FltCoastStop" 4 = "Flt RampStop" 5 = "Flt CL Stop"	RW	32-bit Integer
		436 439	**Shear Pin1 Level** **Shear Pin2 Level** Shear Pin *n* Level Sets the value of current which will activate the shear pin function (see P435/438 [Shear Pin *n* Actn]).	Units: Default: Min/Max:	Amps P21 [Rated Amps] 0.0 / P21 [Rated Amps] x 1.5	RW	Real
		437 440	**Shear Pin 1 Time** **Shear Pin 2 Time** Shear Pin *n* Time Sets the time associated with activation of the shear pin function (see P435/438 [Shear Pin *n* Actn]).	Units: Default: Min/Max:	Secs 0.00 0.00 / 30.00	RW	Real

Options	Reserved	Reserved	Reserved	Reserved	Reserved	Reserved	Reserved	Reserved	Reserved	Reserved	Reserved	Reserved	Reserved	Reserved	Shear2NoAcc	Shear1NoAcc
Default	0	0	0	0	0	0	0	0	0	0	0	0	0	0	0	0
Bit	15	14	13	12	11	10	9	8	7	6	5	4	3	2	1	0

File	Group	No.	Display Name Full Name Description	Values		Read-Write	Data Type
PROTECTION	Load Limits	441	**Load Loss Action** Load Loss Action Configures the action to take when the load is less than or equal to P442 [Load Loss Level] for the amount of time set in P443 [Load Loss Time]. "Ignore" (0) – No action is taken. "Alarm" (1) – Type 1 alarm indicated. "Flt Minor" (2) – Minor fault indicated. If running, drive continues to run. Enable with P950 [Minor Flt Cfg]. If not enabled, acts like a major fault. "FltCoastStop" (3) – Major fault indicated. Coast to Stop. "Flt RampStop" (4) – Major fault indicated. Ramp to Stop. "Flt CL Stop" (5) – Major fault indicated. Current Limit Stop.	Default: Options:	0 = "Ignore" 0 = "Ignore" 1 = "Alarm" 2 = "Flt Minor" 3 = "FltCoastStop" 4 = "Flt RampStop" 5 = "Flt CL Stop"	RW	32-bit Integer
		442	**Load Loss Level** Load Loss Level Sets the percentage of motor nameplate torque (absolute value) associated with activation of the load loss function, P441 [Load Loss Action]. See P5 [Torque Cur Fdbk] motor nameplate torque.	Units: Default: Min/Max:	% 200.00 0.00 / 800.00	RW	Real
		443	**Load Loss Time** Load Loss Time Sets the time associated with activation of the load loss function (see P441 [Load Loss Action]).	Units: Default: Min/Max:	Secs 0.00 0.00 / 300.00	RW	Real
		444	**OutPhaseLossActn** Output Phase Loss Action Selects action to take if output phase loss is detected. "Ignore" (0) – No action is taken. "Alarm" (1) – Type 1 alarm indicated. "Flt Minor" (2) – Minor fault indicated. If running, drive continues to run. Enable with P950 [Minor Flt Cfg]. If not enabled, acts like a major fault. "FltCoastStop" (3) – Major fault indicated. Coast to Stop. "Flt RampStop" (4) – Major fault indicated. Ramp to Stop. "Flt CL Stop" (5) – Major fault indicated. Current Limit Stop.	Default: Options:	0 = "Ignore" 0 = "Ignore" 1 = "Alarm" 2 = "Flt Minor" 3 = "FltCoastStop" 4 = "Flt RampStop" 5 = "Flt CL Stop"	RW	32-bit Integer
		445	**Out PhaseLossLvl** Output Phase Loss Level Sets the threshold level which is used to determine an output phase loss condition. Each motor phase must exceed this value. Decreasing this parameter's value lowers sensitivity.	Default: Min/Max:.	200 0 / 1000	RW	32-bit Integer

File	Group	No.	Display Name Full Name Description	Values		Read-Write	Data Type
PROTECTION	Power Loss	**449**	**Power Loss Actn** Power Loss Action Configures the drive's response to a power loss timeout condition. Time is set in P452/455 [Pwr Loss *n* Time]. "Ignore" (0) – No action is taken. "Alarm" (1) – Type 1 alarm indicated. "Flt Minor" (2) – Minor fault indicated. If running, drive continues to run. Enable with P950 [Minor Flt Cfg]. If not enabled, acts like a major fault. "FltCoastStop" (3) – Major fault indicated. Coast to Stop.	Default: Options:	1 = "Alarm" 0 = "Ignore" 1 = "Alarm" 2 = "Flt Minor" 3 = "FltCoastStop"	RW	32-bit Integer
		450 **453**	**Pwr Loss Mode A** **Pwr Loss Mode B** Power Loss Mode A, B Configures the drive's response to a loss of input power as sensed by a drop in bus voltage. The bus voltage drop is specified in P451/454 [Pwr Loss *n* Level] and compared to the bus voltage memory P12 [DC Bus Memory]. "Coast" (0) - When a power loss occurs, the drive stops modulating. Use this option on low inertia loads. "Decel" (1) - The drive will decelerate the motor to help maintain the bus voltage. Use this option on high inertia loads. "Continue" (2) - The drive will continue to run through a power loss. Improper use of this option can cause drive damage.	Default: Options:	0 = "Coast" 0 = "Coast" 1 = "Decel" 2 = "Continue"	RW	32-bit Integer
		451 **454**	**Pwr Loss A Level** **Pwr Loss B Level** Power Loss Mode A, B Level Sets the bus voltage level at which ride-through begins and modulation ends. When bus voltage falls below this level, the drive prepares for an automatic restart. Enter a percentage of the bus voltage derived from the high voltage setting for the voltage class. The trip level is calculated as: P7 [DC Bus Memory] - P451 [Pwr Loss A Level] or P454 [Pwr Loss B Level] For example: on a 400/480V drive, 0.3913 x 480 VAC x $\sqrt{2}$ = 265.62 VDC	Units: Default: Min/Max:	V DC P20 [Rated Volts] x 0.3913 0.0 / P20 [Rated Volts] x 1.41	RW	Real
		452 **455**	**Pwr Loss A Time** **Pwr Loss B Time** Power Loss Mode A, B Time Sets the time that the drive will remain in power loss mode before a fault is detected.	Units: Default: Min/Max:	Secs 2.00 0.00 / 60.00	RW	Real
		456	**PwrLoss RT BusKp** Power Loss Ride Through Bus Kp Proportional gain that adjusts the response of the bus regulator when power loss ride through is enabled and detected. This parameter is not functional when any of the FV motor control modes are selected.	Units: Default: Min/Max:	A/V 585.0 0.0 / 1000000.0	RW	Real
		457	**PwrLoss RT BusKd** Power Loss Ride Through Bus Kd Derivative gain that adjusts the response of the bus regulator when power loss ride through is enabled and detected. This parameter is not functional when any of the FV motor control modes are selected.	Units: Default: Min/Max:	Secs 50.0 0.0 / 1000000.0	RW	Real
		458	**PwrLoss RT ACRKp** Power Loss Ride Through Active Current Regulator Kp Proportional gain that adjusts the response of the active current regulator portion of the bus regulator when power loss ride through is enabled and detected. This parameter is not functional when any of the FV motor control modes are selected.	Units: Default: Min/Max:	Hz/A 524.0 0.0 / 100000.0	RW	Real
		459	**PwrLoss RT ACRKi** Power Loss Ride Through Active Current Regulator Ki Integral gain that adjusts the response of the active current regulator portion of the bus regulator when power loss ride through is enabled and detected. This parameter is not functional when any of the FV motor control modes are selected.	Units: Default: Min/Max:	Hz/A 2045.0 0.0 / 50000.0	RW	Real

File	Group	No.	Display Name Full Name Description	Values		Read-Write	Data Type
PROTECTION	Power Loss	**460**	**UnderVltg Action** Under Voltage Action Configures the drive's response to an under voltage event configured in P461 [UnderVltg Level]. "Ignore" (0) – No action is taken. "Alarm" (1) – Type 1 alarm indicated. "Flt Minor" (2) – Minor fault indicated. If running, drive continues to run. Enable with P950 [Minor Flt Cfg]. If not enabled, acts like a major fault. "FltCoastStop" (3) – Major fault indicated. Coast to Stop. "Flt RampStop" (4) – Major fault indicated. Ramp to Stop. "Flt CL Stop" (5) – Major fault indicated. Current Limit Stop.	Default: Options:	3 = "FltCoastStop" 0 = "Ignore" 1 = "Alarm" 2 = "Flt Minor" 3 = "FltCoastStop" 4 = "Flt RampStop" 5 = "Flt CL Stop"	RW	32-bit Integer
		461	**UnderVltg Level** Under Voltage Level DC line voltage level below which an undervoltage event occurs.	Units: Default: Min/Max:	V AC Based on Drive Rating and Voltage Class 0.00 / Based on Drive Voltage (230, 460, 600, and 690)	RW	Real
		462	**InPhase LossActn** Input Phase Loss Action Selects the action to take if an input phase loss is detected. The input phase loss function helps protect the drive bus capacitors from excessive bus ripple. The bus ripple threshold set by P463 [InPhase Loss Lvl]. "Ignore" (0) – No action is taken. **Important:** Operating in a phase loss condition will seriously degrade the reliability of the drive. "Alarm" (1) – Type 1 alarm indicated. "Flt Minor" (2) – Minor fault indicated. If running, drive continues to run. Enable with P950 [Minor Flt Cfg]. If not enabled, acts like a major fault. "FltCoastStop" (3) – Major fault indicated. Coast to Stop. "Flt RampStop" (4) – Major fault indicated. Ramp to Stop. "Flt CL Stop" (5) – Major fault indicated. Current Limit Stop.	Default: Options:	3 = "FltCoastStop" 0 = "Ignore" 1 = "Alarm" 2 = "Flt Minor" 3 = "FltCoastStop" 4 = "Flt RampStop" 5 = "Flt CL Stop"	RW	32-bit Integer
		463	**InPhase Loss Lvl** Input Phase Loss Level Sets the threshold at which the DC bus voltage ripple triggers an Input Phase Loss fault. Input phase loss is assumed when the DC bus voltage ripple exceeds the tolerance set by this parameter. Setting a larger value permits a higher bus voltage ripple without causing the drive to fault. The default value of 325 is equal to the expected ripple level for a full rated motor running at half load with single phase input.	Default: Min/Max:	325 10 / 32767	RW	32-bit Integer
		464	**DC Bus Mem Reset** Direct Current Bus Memory Reset Forces a manual update to P12 [DC Bus Memory], which is automatically initialized upon power-up or precharge and continually updated during normal operation. A transition from 0 to 1 will cause a bus memory update. However, the update will be ignored if the command cannot be acted upon within 30 seconds because the drive is regenerating or is firing the dynamic brake. A manual reset is rarely required, but may occur when input voltage is abnormally high or low for an extended period of time followed by a fast return to a nominal value.	Default: Options:	0 = "Disabled" 0 = "Disabled" 1 = "Enabled"	RW	32-bit Integer

File	Group	No.	Display Name Full Name Description	Values		Read-Write	Data Type
PROTECTION	Ground Fault	**466**	**Ground Warn Actn** Ground Warning Action Selects the action to take when a ground current event is detected. The Ground Warning feature detects a ground current that exceeds the level set in P467 [Ground Warn Lvl]. An alarm is displayed until the ground current falls below the level set in P467 [Ground Warn Lvl] while the drive continues to run. A fault will stop the drive. A fault cannot be cleared until the ground current is below the level set in P467 [Ground Warn Lvl]. "Ignore" (0) – No action is taken. "Alarm" (1) – Type 1 alarm indicated. "Flt Minor" (2) – Minor fault indicated. If running, drive continues to run. Enable with P950 [Minor Flt Cfg]. If not enabled, acts like a major fault. "FltCoastStop" (3) – Major fault indicated. Coast to Stop. "Flt RampStop" (4) – Major fault indicated. Ramp to Stop. "Flt CL Stop" (5) – Major fault indicated. Current Limit Stop.	Default: Options:	0 = "Ignore" 0 = "Ignore" 1 = "Alarm" 2 = "Flt Minor" 3 = "FltCoastStop" 4 = "Flt RampStop" 5 = "Flt CL Stop"	RW	32-bit Integer
		467	**Ground Warn Lvl** Ground Warning Level Sets the level at which a ground warning alarm will occur.	Units: Default: Min/Max:	Amps 4.00 1.00 / 5.00	RW	Real

File	Group	No.	Display Name Full Name Description	Values		Read-Write	Data Type
PROTECTION	Predictive Maintenance	469	**PredMaint Sts** Predictive Maintenance Status Status of predictive maintenance elapsed life relative to the programmed event level. A value of 1 = event level has been exceeded. Bit 15 is a master bit which = 1 when 1 or more individual bits = 1.			RO	16-bit Integer
		470	**PredMaintAmbTemp** Predictive Maintenance Ambient Temperature Used to predict cooling fan life, and possibly the life of other temperature dependent components in the future. Changes to this parameter affect the total life and remaining life, meaning that only one temperature can be programmed for the entire life of the drive.	Units: Default: Min/Max:	DegC 50.00 0.00 / 50.00	RW	Real
		471	**PredMaint Rst En** Predictive Maintenance Reset Enable Enables P472 [PredMaint Reset] to execute a reset of the selected elapsed life parameter. Any single reset in P472 [PredMaint Reset] will force this parameter back to 0 (disabled), so that only one elapsed life parameter can be reset at a time. This parameter is only reset when Set Defaults "All" (not recommended) is executed.	Default: Options:	Current Selection 0 = "Disable" 1 = "Enable"	RW	32-bit Integer
		472	**PredMaint Reset** Predictive Maintenance Reset Resets predictive maintenance elapsed life parameters, one at a time. Enabled by P471 [PredMaint Rst En]. This parameter is only reset when Set Defaults "All" (not recommended) is executed.	Default: Options:	Current Selection 0 = "Ready" 1 = "HS Fan Life" (1) 2 = "In Fan Life" (1) 3 = "MtrBrng Life" 4 = "MtrLube Hrs" 5 = "MchBrng Life" 6 = "MchLube Hrs" (1) Frames 1...7 only.	RW	32-bit Integer
		481	755 (8+) **CbFan Derate** Cabinet Fan Derate Derating factor applied to P482 [CbFan TotalLife]. Used to adjust total fan life for poor air quality or vibration.	Default: Min/Max:	1.00 0.01 / 1.00	RW	Real
		482	755 (8+) **CbFan TotalLife** Cabinet Fan Total Life Total number of hours expected over the life of a single cabinet fan. Calculated as a function of fan manufacturer's life data (from frame rating table), P470 [PredMaintAmbTemp] and P481 [CbFan Derate].	Units: Default: Min/Max:	Hrs 0.00 0.00 / 21474836.47 (31 bits)	RO	32-bit Integer
		483	755 (8+) **CbFan ElpsdLife** Cabinet Fan Elapsed Life Accumulated hours of cabinet fan run time. Frame 8 drives have a single converter, and therefore a single cabinet fan. The value of this parameter reflects the elapsed life of that fan. Frame 9 drives have two converters, and therefore two cabinet fans. Frame 10 drives have three converters, and therefore three cabinet fans. For frame 9 and 10 drives, the value of this parameter reflects the longest elapsed life of all the cabinet fans. Individual elapsed life values are available at parameters 138 [C1 CbFanElpsdLif], 238 [C2 CbFanElpsdLif], and 338 [C3 CbFanElpsLif] in port 11.	Units: Default: Min/Max:	Hrs 0.00 0.00 / 21474836.47 (31 bits)	RO	32-bit Integer

Options

	Master	Reserved	Reserved	Reserved	Reserved	Reserved	Reserved	Reserved	Reserved	Reserved	Mch Lube	Mch Bearing	Mtr Lube	Mtr Bearing	Internal Fan	Heatsink Fan
Default	0	0	0	0	0	0	0	0	0	0	0	0	0	0	0	0
Bit	15	14	13	12	11	10	9	8	7	6	5	4	3	2	1	0

0 = False
1 = True

File	Group	No.	Display Name Full Name Description	Values		Read-Write	Data Type
PROTECTION	Predictive Maintenance	**484**	755 (8+) **CbFan RemainLife** Cabinet Fan Remaining Life Remaining number of hours until estimated end of life for cabinet fans, and is the difference between P482 [CbFan TotalLife] and P483 [CbFan ElpsdLife]. All negative values of this parameter need to be treated as excessive use (> 100%), and trigger the appropriate action chosen by P486 [CbFan EventActn]. Frame 8 drives have a single converter, and therefore have a single cabinet fan. The value of this parameter reflects the remaining life of that fan. Frame 9 drives have two converters, and therefore two cabinet fans. Frame 10 drives have three converters, and therefore three cabinet fans. For frame 9 and 10 drives, the value of this parameter reflects the shortest remaining life of all the cabinet fans.	Units: Default: Min/Max:	Hrs 0.00 –21474836.48 / 21474836.47	RO	32-bit Integer
		485	755 (8+) **CbFan EventLevel** Cabinet Fan Event Level Percent of total expected cabinet fan life for which an early warning alarm or fault can be programmed.	Units: Default: Min/Max:	% 80.000 0.000 / 100.000	RW	Real
		486	755 (8+) **CbFan EventActn** Cabinet Fan Event Action Configures the response to a cabinet fan event, which occurs when P485 [CbFan EventLevel] is met or exceeded. "Ignore" (0) – No action is taken. "Alarm" (1) – Type 1 alarm indicated. "Flt Minor" (2) – Minor fault indicated. If running, drive continues to run. Enable with P950 [Minor Flt Cfg]. If not enabled, acts like a major fault. "FltCoastStop" (3) – Major fault indicated. Coast to Stop. "Flt RampStop" (4) – Major fault indicated. Ramp to Stop. "Flt CL Stop" (5) – Major fault indicated. Current Limit Stop.	Default: Options:	0 = "Ignore" 0 = "Ignore" 1 = "Alarm" 2 = "Flt Minor" 3 = "FltCoastStop" 4 = "Flt RampStop" 5 = "Flt CL Stop"	RW	32-bit Integer
		488	**HSFan Derate** Heatsink Fan Derate Derating factor applied to P489 [HSFan TotalLife]. Used to adjust total fan life for poor air quality or vibration.	Default: Min/Max:	1.00 0.01 / 1.00	RW	Real
		489	**HSFan TotalLife** Heatsink Fan Total Life Total number of hours expected over the life of a single heatsink fan. Calculated as a function of fan manufacturer's life data (from frame rating table), P470 [PredMaintAmbTemp] and P488 [HSFan Derate].	Units: Default: Min/Max:	Hrs 0.00 / Based on Drive Rating 0.00 / 21474836.47 (31 bits)	RO	32-bit Integer
		490	**HSFan ElpsdLife** Heatsink Fan Elapsed Life Accumulated hours of heatsink fan run time. Use P472 [PredMaint Reset] to reset this parameter. 755 (8+) Frame 8 drives have a single inverter, and therefore have a single heatsink fan. The value of this parameter reflects the elapsed life of that fan. Frame 9 drives have two inverters, and therefore two heatsink fans. Frame 10 drives have three inverters, and therefore three heatsink fans. For frame 9 and 10 drives, the value of this parameter reflects the longest elapsed life of all the heatsink fans. Individual elapsed life values are available at parameters 128 [I1 HSFanElpsdLif], 228 [I2 HSFanElpsdLif] and 328 [I3 HSFanElpsdLif] in port 10.	Units: Default: Min/Max:	Hrs 0.00 / Based on Drive Rating 0.00 / 21474836.47 (31 bits)	RO	32-bit Integer

File	Group	No.	Display Name Full Name Description	Values		Read-Write	Data Type
PROTECTION	Predictive Maintenance	**491**	**HSFan RemainLife** Heatsink Fan Remaining Life Remaining number of hours until estimated end of life for heatsink fans, and is the difference between P489 [HSFan TotalLife] and P490 [HSFan ElpsdLife]. All negative values of this parameter need to be treated as excessive use (> 100%), and trigger the appropriate action chosen by P493 [HSFan EventActn]. Use P472 [PredMaint Reset] to reset this parameter. 755 (8+) Frame 8 drives have a single inverter, and therefore a single heatsink fan. The value of this parameter reflects the remaining life of that fan. Frame 9 drives have two inverters, and therefore two heatsink fans. Frame 10 drives have three inverters, and therefore three heatsink fans. For frame 9 and 10 drives, the value of this parameter reflects the shortest remaining life of all the heatsink fans.	Units: Default: Min/Max:	Hrs 0.00 / Based on Drive Rating –21474836.48 / 21474836.47	RO	32-bit Integer
		492	**HSFan EventLevel** Heatsink Fan Event Level Percent of total expected heatsink fan life for which an early warning alarm or fault can be programmed.	Units: Default: Min/Max:	% 80.000 0.000 / 100.000	RW	Real
		493	**HSFan EventActn** Heatsink Fan Event Action Configures the response to a heatsink fan event, which occurs when P492 [HSFan EventLevel] is met or exceeded. "Ignore" (0) – No action is taken. "Alarm" (1) – Type 1 alarm indicated. "Flt Minor" (2) – Minor fault indicated. If running, drive continues to run. Enable with P950 [Minor Flt Cfg]. If not enabled, acts like a major fault. "FltCoastStop" (3) – Major fault indicated. Coast to Stop. "Flt RampStop" (4) – Major fault indicated. Ramp to Stop. "Flt CL Stop" (5) – Major fault indicated. Current Limit Stop.	Default: Options:	0 = "Ignore" 0 = "Ignore" 1 = "Alarm" 2 = "Flt Minor" 3 = "FltCoastStop" 4 = "Flt RampStop" 5 = "Flt CL Stop"	RW	32-bit Integer
		494	**HSFan ResetLog** Heatsink Fan Reset Log Total number of resets performed on the P490 [HSFan ElpsdLife] parameter. **Note:** This parameter is not used by PowerFlex 755 Frame 8 drives and larger.	Default: Min/Max:	0 0 / 255 (unsigned 8 bits)	RO	32-bit Integer
		495	**InFan Derate** Internal Fan Derate Derating factor applied to P496 [InFan TotalLife]. Used to adjust total fan life for poor air quality or vibration.	Default: Min/Max:	1.00 0.01 / 1.00	RW	Real
		496	**InFan TotalLife** Internal Fan Total Life Total number of hours expected over the life of an internal fan. Calculated as a function of fan manufacturer's life data (from frame rating table), P470 [PredMaintAmbTemp] and P495 [InFan Derate]. 755 (8+) Total number of hours expected over the life of a single internal fan. Calculated as a function of fan manufacturer's life data (from frame rating table), P470 [PredMaintAmbTemp] and P495 [InFan Derate].	Units: Default: Min/Max:	Hrs 0.00 0.00 / 21474836.47 (31 bits)	RO	32-bit Integer

File	Group	No.	Display Name Full Name Description	Values		Read-Write	Data Type
PROTECTION	Predictive Maintenance	497	**InFan ElpsdLife** Internal Fan Elapsed Life Accumulated hours of internal stirring fan run time. Note: Frames 6 and 7 run continuously, and frames 2…5 are controlled by firmware. Use P472 [PredMaint Reset] to reset this parameter. 755 (8+) Frame 8 drives have a single inverter, and therefore a single internal stirring fans. The value of this parameter reflects the elapsed life of that internal fan. Frame 9 drives have two inverters, and therefore two internal fans. Frame 10 drives have three inverters, and therefore three internal fans. For frame 9 and 10 drives, the value of this parameter reflects the longest elapsed life of the internal fans. Individual elapsed life values are available at parameters 129 [I1 InFanElpsdLif], 229 [I2 InFanElpsdLif], and 329 [I3 InFanElpsdLif] in port 10.	Units: Default: Min/Max:	Hrs 0.00 0.00 / 21474836.47 (31 bits)	RO	32-bit Integer
		498	**InFan RemainLife** Internal Fan Remaining Life Remaining number of hours until estimated end of life for internal stirring fans, and is the difference between P496 [InFan TotalLife] and P497 [InFan ElpsdLife]. All negative values of this parameter need to be treated as excessive use (> 100%), and trigger the appropriate action chosen by P500 [InFan EventActn]. Use P472 [PredMaint Reset] to reset this parameter. 755 (8+) Frame 8 drives have a single inverter, and therefore a single internal stirring fan. The value of this parameter reflects the remaining life of that internal fan. Frame 9 drives have two inverters, and therefore two internal fans. Frame 10 drives have three inverters, and therefore three internal fans. For frame 9 and 10 drives, the value of this parameter reflects the shortest remaining life of all the internal fans.	Units: Default: Min/Max:	Hrs 0.00 –21474836.48 / 21474836.47	RO	32-bit Integer
		499	**InFan EventLevel** Internal Fan Event Level Percent of total expected internal stirring fan life for which an early warning alarm or fault can be programmed.	Units: Default: Min/Max:	% 80.000 0.000 / 100.000	RW	Real
		500	**InFan EventActn** Internal Fan Event Action Configures the response to an internal stirring fan event, which occurs when P499 [InFan EventLevel] is met or exceeded. "Ignore" (0) – No action is taken. "Alarm" (1) – Type 1 alarm indicated. "Flt Minor" (2) – Minor fault indicated. If running, drive continues to run. Enable with P950 [Minor Flt Cfg]. If not enabled, acts like a major fault. "FltCoastStop" (3) – Major fault indicated. Coast to Stop. "Flt RampStop" (4) – Major fault indicated. Ramp to Stop. "Flt CL Stop" (5) – Major fault indicated. Current Limit Stop.	Default: Options:	0 = "Ignore" 0 = "Ignore" 1 = "Alarm" 2 = "Flt Minor" 3 = "FltCoastStop" 4 = "Flt RampStop" 5 = "Flt CL Stop"	RW	32-bit Integer
		501	**InFan ResetLog** Internal Fan Reset Log Total number of resets performed on the P497 [InFan ElpsdLife] parameter. **Note:** This parameter is not used by PowerFlex 755 Frame 8 drives and larger.	Default: Min/Max:	0 0 / 255 (unsigned 8 bits)	RO	32-bit Integer

File	Group	No.	Display Name Full Name Description	Values		Read-Write	Data Type
PROTECTION	Predictive Maintenance	502	**MtrBrngTotalLife** Motor Bearing Total Life Total number of hours expected over the life of the motor bearings.	Units: Default: Min/Max:	Hrs 0.00 0.00 / 21474836.47 (31 bits)	RW	32-bit Integer
		503	**MtrBrngElpsdLife** Motor Bearing Elapsed Life Accumulated hours of motor bearing run time. Hours are accumulated any time the drive is running greater than zero speed. Use P472 [PredMaint Reset] to reset this parameter.	Units: Default: Min/Max:	Hrs 0.00 0.00 / 21474836.47 (31 bits)	RO	32-bit Integer
		504	**MtrBrngRemainLif** Motor Bearing Remaining Life Remaining number of hours until estimated end of life for motor bearings, and is the difference between P502 [MtrBrngTotalLife] and P503 [MtrBrngElpsdLife]. Use P472 [PredMaint Reset] to reset this parameter.	Units: Default: Min/Max:	Hrs 0.00 –21474836.48 / 21474836.47	RO	32-bit Integer
		505	**MtrBrngEventLvl** Motor Bearing Event Level Percent of total expected motor bearing life for which an early warning alarm or fault can be programmed.	Units: Default: Min/Max:	% 80.000 0.000 / 100.000	RW	Real
		506	**MtrBrngEventActn** Motor Bearing Event Action Configures the response to a motor bearing event, which occurs when P505 [MtrBrngEventLvl] is met or exceeded. "Ignore" (0) – No action is taken. "Alarm" (1) – Type 1 alarm indicated. "Flt Minor" (2) – Minor fault indicated. If running, drive continues to run. Enable with P950 [Minor Flt Cfg]. If not enabled, acts like a major fault. "FltCoastStop" (3) – Major fault indicated. Coast to Stop. "Flt RampStop" (4) – Major fault indicated. Ramp to Stop. "Flt CL Stop" (5) – Major fault indicated. Current Limit Stop.	Default: Options:	0 = "Ignore" 0 = "Ignore" 1 = "Alarm" 2 = "Flt Minor" 3 = "FltCoastStop" 4 = "Flt RampStop" 5 = "Flt CL Stop"	RW	32-bit Integer
		507	**MtrBrng ResetLog** Motor Bearing Reset Log Total number of resets performed on the P503 [MtrBrngElpsdLife] parameter.	Default: Min/Max:	0 0 / 255 (unsigned 8 bits)	RO	32-bit Integer
		508	**MtrLubeElpsdHrs** Motor Lubricant Elapsed Hours Accumulated hours since the most recent lubrication of the motor bearings. Can be reset without restriction. Use P472 [PredMaint Reset] to reset this parameter.	Units: Default: Min/Max:	Hrs 0.00 0.00 / 21474836.47	RO	32-bit Integer
		509	**MtrLubeEventLvl** Motor Lubricant Event Level Number of hours between scheduled lubrications of the motor bearings. Used for an early warning alarm or fault according to P510 [MtrLubeEventActn]. Event is disabled when set to 0.	Units: Default: Min/Max:	Hrs 0.000 0.000 / 2147483648.000	RW	Real
		510	**MtrLubeEventActn** Motor Lubricant Event Action Configures the response to a motor bearing lubrication event, which occurs when P509 [MtrLubeEventLvl] is met or exceeded. "Ignore" (0) – No action is taken. "Alarm" (1) – Type 1 alarm indicated. "Flt Minor" (2) – Minor fault indicated. If running, drive continues to run. Enable with P950 [Minor Flt Cfg]. If not enabled, acts like a major fault. "FltCoastStop" (3) – Major fault indicated. Coast to Stop. "Flt RampStop" (4) – Major fault indicated. Ramp to Stop. "Flt CL Stop" (5) – Major fault indicated. Current Limit Stop.	Default: Options:	0 = "Ignore" 0 = "Ignore" 1 = "Alarm" 2 = "Flt Minor" 3 = "FltCoastStop" 4 = "Flt RampStop" 5 = "Flt CL Stop"	RW	32-bit Integer

File	Group	No.	Display Name Full Name Description	Values		Read-Write	Data Type
PROTECTION	Predictive Maintenance	511	**MchBrngTotalLife** Machine Bearing Total Life Total number of hours expected over the life of the machine bearings.	Units: Default: Min/Max:	Hrs Current Value 0.00 / 21474836.47	RW	32-bit Integer
		512	**MchBrngElpsdLife** Machine Bearing Elapsed Life Accumulated hours of machine bearing run time. Use P472 [PredMaint Reset] to reset this parameter.	Units: Default: Min/Max:	Hrs 0.00 0.00 / 21474836.47	RO	32-bit Integer
		513	**MchBrngRemainLif** Machine Bearing Remaining Life Remaining number of hours until estimated end of life for machine bearings, and is the difference between Machine Bearing Total Life and Machine Bearing Elapsed Life. Use P472 [PredMaint Reset] to reset this parameter.	Units: Default: Min/Max:	Hrs 0.00 –21474836.48 / 21474836.47	RO	32-bit Integer
		514	**MchBrngEventLvl** Machine Bearing Event Level Percent of total expected machine bearing life for which an early warning alarm or fault can be programmed.	Units: Default: Min/Max:	% 80.000 0.000 / 100.000	RW	Real
		515	**MchBrngEventActn** Machine Bearing Event Action Configures the response to a machine bearing event, which occurs when P514 [MchBrngEventLvl] is met or exceeded. "Ignore" (0) – No action is taken. "Alarm" (1) – Type 1 alarm indicated. "Flt Minor" (2) – Minor fault indicated. If running, drive continues to run. Enable with P950 [Minor Flt Cfg]. If not enabled, acts like a major fault. "FltCoastStop" (3) – Major fault indicated. Coast to Stop. "Flt RampStop" (4) – Major fault indicated. Ramp to Stop. "Flt CL Stop" (5) – Major fault indicated. Current Limit Stop.	Default: Options:	0 = "Ignore" 0 = "Ignore" 1 = "Alarm" 2 = "Flt Minor" 3 = "FltCoastStop" 4 = "Flt RampStop" 5 = "Flt CL Stop"	RW	32-bit Integer
		516	**MchBrngResetLog** Machine Bearing Reset Log Total number of resets performed on the P512 [MchBrngElpsdLife] parameter.	Default: Min/Max:	0 0 / 255	RO	32-bit Integer
		517	**MchLubeElpsdHrs** Machine Lubricant Elapsed Hours Accumulated machine hours since the most recent lubrication of the machine bearings. Can be reset without restriction. Use P472 [PredMaint Reset] to reset this parameter.	Units: Default: Min/Max:	Hrs 0.00 0.00 / 21474836.47	RO	32-bit Integer
		518	**MchLube EventLvl** Machine Lubricant Event Level Number of hours between scheduled lubrications of the machine bearings. Used for an early warning alarm or fault according to P519 [MchLubeEventActn]. Event is disabled when set to 0.	Units: Default: Min/Max:	Hrs 0.000 0.000 / 2147483648.000	RW	Real
		519	**MchLubeEventActn** Machine Lubricant Event Action Configures the response to a machine bearing lubrication event, which occurs when P518 [MchLube EventLvl] is met or exceeded. "Ignore" (0) – No action is taken. "Alarm" (1) – Type 1 alarm indicated. "Flt Minor" (2) – Minor fault indicated. If running, drive continues to run. Enable with P950 [Minor Flt Cfg]. If not enabled, acts like a major fault. "FltCoastStop" (3) – Major fault indicated. Coast to Stop. "Flt RampStop" (4) – Major fault indicated. Ramp to Stop. "Flt CL Stop" (5) – Major fault indicated. Current Limit Stop.	Default: Options:	0 = "Ignore" 0 = "Ignore" 1 = "Alarm" 2 = "Flt Minor" 3 = "FltCoastStop" 4 = "Flt RampStop" 5 = "Flt CL Stop"	RW	32-bit Integer

File	Group	No.	Display Name Full Name Description	Values		Read-Write	Data Type
PROTECTION	Emergency Override	**1680**	**DI EmergencyOVRD** Digital Input Emergency Override Select a digital input that is used to enable and disable emergency override. Connect the digital input to circuitry that closes, or energizes, to enable emergency override. **Important**: This digital input does not function as a valid stop source for the purposes of Fault 152 'No Stop Source'. To avoid that fault do one of the following: • Program another digital input for DI M Run or DI M Stop • Use an HIM • Use a network connection • Or, set bit 5 'PERIF Flts' of parameter 1683 [Emerg Prot OVRD]	Default: Min/Max:	0.00 0.00/159999.15	RW	32-bit Integer
		1681	**Emerg OVRD Mode** Emergency Override Mode Selection Enter a value to select the emergency override mode "Disabled" (0) - disables emergency override. Normal protections are in force. "Only OVRD" (1) - Enables emergency override, with no change to position, velocity, or torque operation. "Purge Freq" (2) - Enables emergency override and the drive uses the value in parameter 1682 [Purge Frequency] for its velocity reference.	Default: Options:	0 = "Disabled" 0 = "Disabled" 1 = "Only OVRD" 2 = "Purge Freq"	RW	32-bit Integer
		1682	**Purge Frequency** Purge Frequency Enter a value to set the speed reference while emergency override is enabled in purge frequency mode.	Units: Default: Min/Max:	HZ or RPM 5 -35400/+35400	RW	Real
		1683	**Emerg Prot OVRD** Emergency Protection Override Enter a value to configure the classes of faults for which the drive (or bus supply) to be bypassed when emergency override is enabled. See Table 10, Drive Fault and Alarm Types, Descriptions, and Actions, for faults that apply to these classes. The following table defines bits and the related events overridden by the function when the bit is set on a PowerFlex 755 or a PowerFlex 753.			RW	32-bit Integer

Options	Reserved	Reserved	Reserved	Reserved	Reserved	Reserved	Reserved	Reserved	Reserved	Reserved	Reserved	Reserved	Reserved	Reserved	Reserved	Port 9 Flts	Port 8 Flts	Port 7 Flts	Port 6 Flts	Port 5 Flts	Port 4 Flts	Port1-3 Flts	TorqPrv Flts	Fdbk Faults	Board Faults	DevLogixFlts	ENET PrtFlts	PERIF Flts	Reserved	Reserved	PwrStrucFlts	Line Faults	Load Faults
Default													0	0	0	0	0	0	0	0	0	0	0	0	0	0	0	0	0	0	0	0	0
Bit	31	30	29	28	27	26	25	24	23	22	21	20	19	18	17	16	15	14	13	12	11	10	9	8	7	6	5	4	3	2	1	0		

0 = False
1 = True

Bit 0 Load Faults

Setting this bit overrides these load or motor related exception events: Motor Overload, Ground Warning, Load Loss, Output Phase Loss, Decel Inhibit, OverSpeed Limit, Excessive Load, Shear Pin 1, Shear Pin 2, IPM OverCurrent, SW OverCurrent, OutCurShare PhU, OutCurShare PhV, OutCurShare PhW.

Bit 1 Line Faults

Setting this bit overrides these line or input power exception events: Power Loss Fault, UnderVoltage, Input Phase Loss, Ext Precharge Err.

Bit 2 PwrStrucFlts

Setting this bit overrides these power structure exception events: Overvoltage, Heat Sink Overtemp, Trstr Overtemp, Drive Overload, DC Bus Mismatch, HS Temp Imbal U, HS Temp Imbal V, HS Temp Imbal W, Heat Sink Undertemp.

Bit 3 Not Used

Bit 4 Not Used

File	Group	No.	Display Name Full Name Description	Values	Read-Write	Data Type
PROTECTION	Emergency Ovride		Bit 5 PERIF Flts Setting this bit overrides these peripheral exception events: Aux Input, Dyn Brake Overtemp, No Stop Source. Bit 6 ENET PrtFlts Setting this bit overrides these EtherNet port exception events: Port 13 Adapter, Port 13 comm Loss, Port 13 Cfg, Port 13 Checksum, ENET Checksum, All Port 13 faults. Bit 7 DevLogixFlts Setting this bit overrides these DeviceLogix exception events: Port 14 Adapter, Port 14 comm Loss, Port 14 Cfg, Port 14 Checksum, DLX Checksum. Bit 8 Board Faults Setting this bit overrides these miscellaneous board exception events: Motor PTC Trip, Analog In Loss, Anlg Cal Chksum, Cntrl Bd Overtemp. Bit 9 Fdbk Faults Setting this bit overrides these speed and position feedback exception events: Pri VelFdbk Loss, Alt VelFdbk Loss, Aux VelFdbk Loss, Position Fdbk Loss, PM FV Flt Fdbk. Bit 10 TorqPrv Flts Setting this bit overrides these TorqueProve exception events: TorqPrv Spd Band, Brake Slipped, Torq Prove Conflict, TP Encls Config. Bit 11 Port1…3 Flts Setting this bit overrides these DPI port 1…3 communication exception events: Port 1 DPI Loss, Port 2 DPI Loss, Port 3 DPI Loss, Port 1 Adapter, Port 2 Adapter, Port 3 Adapter. Bit 12 Port 4 Flts Setting this bit overrides these DPI port 4 communication exception events: Port 4 DPI Loss, Port 4 Adapter, Port 4 comm Loss, Port 4 Checksum, Port 4 Cfg. Bit 13 Port 5 Flts Setting this bit overrides these DPI port 5 communication exception events: Port 5 DPI Loss, Port 5 Adapter, Port 5 comm Loss, Port 5 Checksum, Port 5 Cfg. Bit 14 Port 6 Flts Setting this bit overrides these DPI port 6 communication exception events: Port 6 DPI Loss, Port 6 Adapter, Port 6 comm Loss, Port 6 Checksum, Port 6 Cfg. Bit 15 Port 7 Flts Setting this bit overrides these DPI port 7 communication exception events: Port 7 DPI Loss, Port 7 Adapter, Port 7 comm Loss, Port 7 Checksum, Port 7 Cfg. Bit 16 Port 8 Flts Setting this bit overrides these DPI port 8 communication exception events: Port 8 DPI Loss, Port 8 Adapter, Port 8 comm Loss, Port 8 Checksum, Port 8 Cfg. Bit 17 Port 9 Flts Setting this bit overrides these DPI port 9 communication exception events: Port 9 DPI Loss, Port 9 Adapter, Port 9 comm Loss, Port 9 Checksum, Port 9 Cfg. Bit 18 ...Bit 31 Not used			
		1684	**EmergMode Status** Emergency Mode Status Displays the status of emergency override: Bit 0 “Emergency” is set when emergency override is enabled and cleared when emergency override is disabled.		RO	16-bit Integer
			The following table defibits and the related events overridden by the function when the bit is set on a PowerFlex 755 or a PowerFlex 753.	0 = Normal 1 = Override		

Options	Reserved	Reserved	Reserved	Reserved	Reserved	Reserved	Reserved	Reserved	Reserved	Reserved	Reserved	Reserved	Reserved	Reserved	Reserved	Override
Default	0	0	0	0	0	0	0	0	0	0	0	0	0	0	0	0
Bit	15	14	13	12	11	10	9	8	7	6	5	4	3	2	1	0

Drive (Port 0) Speed Control File

File	Group	No.	Display Name Full Name Description	Values		Read-Write	Data Type
SPEED CONTROL	Speed Limits	520	**Max Fwd Speed** Maximum Forward Speed Sets the forward speed high limit. Refer to P524 [Overspeed Limit].	Units: Default: Min/Max:	Hz RPM P27 [Motor NP Hertz] P28 [Motor NP RPM] 650 / P27 [Motor NP Hertz] 78000 / P28 [Motor NP RPM] x P31 [Motor Poles]	RW	Real
		521	**Max Rev Speed** Maximum Reverse Speed Sets the reverse speed high limit. Refer to P524 [Overspeed Limit].	Units: Default: Min/Max:	Hz RPM P27 [Motor NP Hertz] x –1.00 P28 [Motor NP RPM] x –1.00 - 650 / P27 [Motor NP Hertz] - 78000 / P28 [Motor NP RPM] x P31 [Motor Poles]	RW	Real
		522	**Min Fwd Speed** Minimum Forward Speed Sets the low limit for speed reference after scaling is applied. Refer to P524 [Overspeed Limit].	Units: Default: Min/Max:	Hz RPM 0.00 650 / P27 [Motor NP Hertz] 78000 / P28 [Motor NP RPM] x P31 [Motor Poles]	RW	Real
		523	**Min Rev Speed** Minimum Reverse Speed Sets the low limit for speed reference after scaling is applied. Refer to P524 [Overspeed Limit].	Units: Default: Min/Max:	Hz RPM 0.00 - 650 / P27 [Motor NP Hertz] - 78000 / P28 [Motor NP RPM] x P31 [Motor Poles]	RW	Real
		524	**Overspeed Limit** Overspeed Limit Sets the incremental amount of the output frequency (above maximum speed: either P520 [Max Fwd Speed] or P521 [Max Rev Speed]) allowable for functions such as slip compensation. 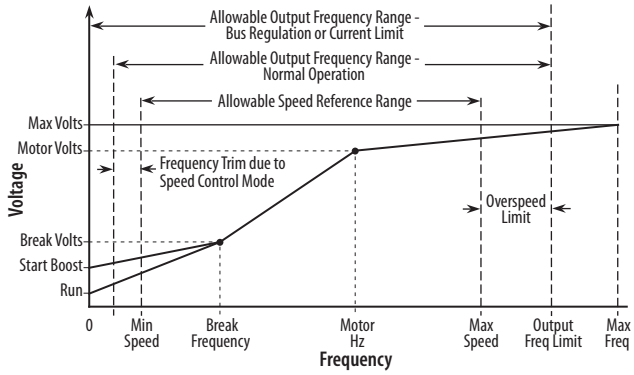 	Units: Default: Min/Max:	Hz RPM Based on P27 [Motor NP Hertz]/P28 [Motor NP RPM] and Voltage Class 0.00 / P27 [Motor NP Hertz] 0.00 / (P28 [Motor NP RPM] / 3)	RW	Real
		525	**Zero Speed Limit** Zero Speed Limit Establishes a band around zero speed that is used to determine when the drive considers the motor to be at zero speed.	Units: Default: Min/Max:	Hz RPM P27 [Motor NP Hertz] x 0.001 P28 [Motor NP RPM] x 0.001 Based on P27 [Motor NP Hertz]/P28 [Motor NP RPM] and Voltage Class	RW	Real

File	Group	No.	Display Name Full Name Description	Values		Read-Write	Data Type
SPEED CONTROL	Speed Limits	**526** **527** **528**	**Skip Speed 1** **Skip Speed 2** **Skip Speed 3** Skip Speed *n* Sets a frequency at which the drive will not operate. Parameters are disabled if set to 0.	Units: Default: Min/Max:	Hz RPM 0.00 P521 [Max Rev Speed] / P520 [Max Fwd Speed]	RW	Real
		529	**Skip Speed Band** Skip Speed Band Sets the bandwidth around a skip speed. [Skip Speed Band] is split, applying 1/2 above and 1/2 below the skip speed. The same bandwidth applies to all skip speeds. Parameter is disabled if set to 0.	Units: Default: Min/Max:	Hz RPM 0.00 0.00 / Based on P27 [Motor NP Hertz]/P28 [Motor NP RPM] and Voltage Class	RW	Real

File	Group	No.	Name Description	Values		Read-Write	Data Type
SPEED CONTROL	Speed Ramp Rates	**535** **536**	**Accel Time 1** **Accel Time 2** Acceleration Time *n* Sets the acceleration rate for all speed changes. Defined as the time to accelerate from 0 to P27 [Motor NP Hertz] or P28 [Motor NP RPM], according to the setting in P300 [Speed Units]. Selection between Acceleration Time 1 and Acceleration Time 2 is controlled by a digital input function (see Digin Functions) or by Logic Command (sent over a communication network or DeviceLogix).	Units: Default: Min/Max:	Secs 10.00 0.00 / 3600.00	RW	Real
		537 **538**	**Decel Time 1** **Decel Time 2** Deceleration Time *n* Sets the deceleration rate for all speed changes. Defined as the time to decelerate from P27 [Motor NP Hertz] or P28 [Motor NP RPM] to 0, according to the setting in P300 [Speed Units]. Selection between Deceleration Time 1 and Deceleration Time 2 is controlled by a digital input function (see Digin Functions) or by Logic Command (sent over a communication network or DeviceLogix). Some stop modes (see P370 and P371) will cause the programmed decel time to be ignored during a stop command.	Units: Default: Min/Max:	Secs 10.00 0.00 / 3600.00	RW	Real
		539	**Jog Acc Dec Time** Jog Acceleration Deceleration Time Acceleration and deceleration rates while commanding jog (uses a jog speed reference).	Units: Default: Min/Max:	Secs 10.00 0.00 / 3600.00	RW	Real
		540	**S Curve Accel** S Curve Acceleration Sets the percentage of accel time applied to the ramp to soften (reduce jerk) the acceleration. Time is added, 1/2 at the beginning and 1/2 at the end of the ramp. 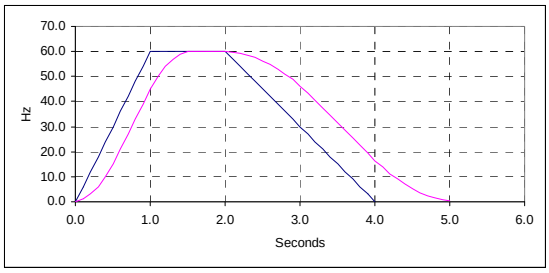 	Units: Default: Min/Max:	% 0.000 0.000 / 100.000	RW	Real
		541	**S Curve Decel** S Curve Deceleration Sets the percentage of decel time applied to the ramp to soften (reduce jerk) the deceleration. Time is added, 1/2 at the beginning and 1/2 at the end of the ramp.	Units: Default: Min/Max:	% 0.000 0.000 / 100.000	RW	Real

File	Group	No.	Display Name Full Name Description	Values		Read-Write	Data Type
SPEED CONTROL	Speed Reference	**545** **550**	**Spd Ref A Sel** **Spd Ref B Sel** Speed Reference A, B Select Selects the source for speed references while in "Auto" (typical) mode. When the drive is in "Manual" mode, these sources are overridden (see P327). [Spd Ref A Sel] is the drive's main speed reference. [Spd Ref B Sel] is an alternate speed reference. Selecting between Reference A and Reference B is controlled by a digital input function (see parameters 173...175 [DI Speed Sel *n*]) or by Logic Command bits 12...14 (sent over a communication network). When the speed reference is from a communication network, set this parameter to Port 0 and select parameter 874...877 [Port *n* Reference] as appropriate. If the speed reference is from an encoder, set this parameter to Port 0 and select parameter 134 [Aux Vel Feedback]. Configure parameter 132 [Aux Vel Fdbk Sel] to the appropriate encoder. To access these parameters, set P301 [Access Level] to option 2 "Expert."	Default: Min/Max:	871 551 0 / 159999	RW	32-bit Integer
		546 **551**	**Spd Ref A Stpt** **Spd Ref B Stpt** Speed Reference A, B Setpoint A constant speed value (similar to a preset speed) to be used as a possible source for P545 and P550.	Units: Default: Min/Max:	Hz RPM 0.0000 Hz –/+P27 [Motor NP Hertz] x 8 –/+P28 [Motor NP RPM] x 8	RW	Real
		547 **552**	**Spd Ref A AnlgHi** **Spd Ref B AnlgHi** Speed Reference A, B Analog High Used only when an analog input is selected as a speed reference according to P545/550 [Spd Ref *n* Sel]. Sets the speed that corresponds to P51/61 [Anlg In*n* Hi] on an I/O module. This establishes scaling throughout the range.	Units: Default: Min/Max:	Hz P520 [Max Fwd Speed] P521 [Max Rev Speed] / P520 [Max Fwd Speed]	RW	Real
		548 **553**	**Spd Ref A AnlgLo** **Spd Ref B AnlgLo** Speed Reference A, B Analog Low Used only when an analog input is selected as a speed reference according to P545/550 [Spd Ref *n* Sel]. Sets the speed that corresponds to P51/61 [Anlg In*n* Lo] on an I/O module. This establishes scaling throughout the range.	Units: Default: Min/Max:	Hz 0.00 P521 [Max Rev Speed] / P520 [Max Fwd Speed]	RW	Real
		549 **554**	**Spd Ref A Mult** **Spd Ref B Mult** Speed Reference A, B Multiplier Applies multipliers to speed references A and B respectively.	Default: Min/Max:	1.00 –/+22000.00	RW	Real
		555	**Spd Ref Scale** Speed Reference Scale Applies only in Flux Vector (FV) modes according to P35 [Motor Ctrl Mode]. Applies a multiplier to P595 [Filtered Spd Ref] after it has been offset by the PID function (P1093 [PID Output Meter]). The scaled result, once limited, will become the primary component of the value of P597 [Final Speed Ref].	Default: Min/Max:	1.000 0.000 / 1000.000	RW	Real
		556 **557**	**Jog Speed 1** **Jog Speed 2** Jog Speed *n* The speed used for jogging when the Jog 1 or Jog 2 function (respectively) is activated by a digital input function or by Logic Command (sent over a communication network).	Units: Default: Min/Max:	Hz Based on P27 [Motor NP Hertz]/P28 [Motor NP RPM] and Voltage Class –/+P27 [Motor NP Hertz] x 8 –/+P28 [Motor NP RPM] x 8	RW	Real
		558	**MOP Reference** Motor Operated Potentiometer Reference Value of the MOP (Motor Operated Potentiometer) Reference to be used as a possible source for P545/550 [Spd Ref *n* Sel]. The MOP Reference is activated (incremented or decremented) by digital input functions.	Units: Default: Min/Max:	% 0.00 –/+800.00	RO	Real

File	Group	No.	Display Name Full Name Description	Values		Read-Write	Data Type
SPEED CONTROL	Speed Reference	559	**Save MOP Ref** Save Motor Operated Potentiometer Reference Enables/disables the feature that saves the present MOP Ref value at power down or stop. Options: Reserved (Bit 15), Reserved (Bit 14), Reserved (Bit 13), Reserved (Bit 12), Reserved (Bit 11), Reserved (Bit 10), Reserved (Bit 9), Reserved (Bit 8), Reserved (Bit 7), Reserved (Bit 6), Reserved (Bit 5), Reserved (Bit 4), Reserved (Bit 3), Reserved (Bit 2), At Stop (Bit 1), At Pwr Down (Bit 0) Default: 0 0 0 0 0 0 0 0 0 0 0 0 0 0 0 0 Bit: 15 14 13 12 11 10 9 8 7 6 5 4 3 2 1 0 0 = False 1 = True			RW	16-bit Integer
		560	**MOP Rate** Motor Operated Potentiometer Rate Sets the rate of change of the MOP reference when an increasing or decreasing MOP signal is present.	Units: Default: Min/Max:	%/s 1.0000 0.0100 / 100.0000	RW	Real
		561	**MOP High Limit** Motor Operated Potentiometer High Limit Sets the upper limit for the MOP Reference.	Units: Default: Min/Max:	% 100.000 0.000 / 800.000	RW	Real
		562	**MOP Low Limit** Motor Operated Potentiometer Low Limit Sets the lower limit for the MOP Reference.	Units: Default: Min/Max:	% –100.000 –800.000 / 0.000	RW	Real
		563	**DI ManRef Sel** Digital Input Manual Reference Select Selects a speed reference to be used when a digital input activates Manual control, according to the operation described by P172 [DI Manual Ctrl].	Default: Min/Max:	872 1 / 159999	RW	32-bit Integer
		564	**DI ManRef AnlgHi** Digital Input Manual Reference Analog High High scale for the manual speed reference that is activated by a digital input when P563 [DI ManRef Sel] is connected to an Analog Input.	Units: Default: Min/Max:	Hz RPM P520 [Max Fwd Speed] P521 [Max Rev Speed] / P520 [Max Fwd Speed]	RW	Real
		565	**DI ManRef AnlgLo** Digital Input Manual Reference Analog Low Used only when P563 [DI ManRef Sel] has selected an analog input as the source of the speed reference. Specifies the speed reference value that will be associated with the Analog In Lo parameter for the I/O Module. Example, P563 [DI ManRef Sel] has selected P50 [Anlg In0 Value] on an I/O Module. The P51 [Anlg In0 Hi] parameter on the I/O Module is set to -10 volts. P564 [DI ManRef AnlgHi] will specify the speed reference value that will correspond with a -10 volt analog input signal.	Units: Default: Min/Max:	Hz RPM 0.000 P521 [Max Rev Speed] / P520 [Max Fwd Speed]	RW	Real
		566	**MOP Init Select** Motor Operated Potentiometer Initialization Select Defines the initial MOP value when the MOP is not configured to start at the “At Power Down” or “At Stop” values selected in P559 [Save MOP Ref].	Default: Min/Max:	567 0 / 159999	RW	32-bit Integer
		567	**MOP Init Stpt** Motor Operated Potentiometer Initialization Setpoint A configurable set point to be used with the MOP initialization function.	Units: Default: Min/Max:	% 0 –/+8.00	RW	Real
		571 572 573 574 575 576 577	**Preset Speed 1** **Preset Speed 2** **Preset Speed 3** **Preset Speed 4** **Preset Speed 5** **Preset Speed 6** **Preset Speed 7** Preset Speed *n* Discrete speed references that are activated by a digital input function (see Digin Functions) or by Logic Command (sent over a communication network or DeviceLogix).	Units: Default: Min/Max:	Hz RPM Based on P27 [Motor NP Hertz]/P28 [Motor NP RPM] and Voltage Class P521 [Max Rev Speed] / P520 [Max Fwd Speed]	RW	Real

File	Group	No.	Display Name Full Name Description	Values		Read-Write	Data Type
SPEED CONTROL	Speed Reference	**588**	**Spd Ref Filter** Speed Reference Filter Selects the amount of filtering applied to the ramped speed reference (P594), and is only active in FV motor control modes (P35). When set to any of the custom settings (3, 4, or 5) the filter is configured using the values set in P589 [Spd Ref Fltr BW] and P590 [Spd Ref FltrGain]. Settings 4 and 5 initialize the values for light and heavy respectively.	Default: Options:	0 = "Off" 0 = "Off" 1 = "Light" 2 = "Heavy" 3 = "Custom" 4 = "SetCustLight" 5 = "SetCustHeavy"	RW	32-bit Integer
		589	**Spd Ref Fltr BW** Speed Reference Filter Bandwidth Sets the bandwidth of the speed reference filter when P588 [Spd Ref Filter] is set to one of the "Custom" settings (3, 4, or 5) A value of zero will disable (bypass) the filter.	Units: Default: Min/Max:	R/S 0.00 0.00 / 500.00	RW	Real
		590	**Spd Ref FltrGain** Speed Reference Filter Gain Sets the gain (kn) of the speed reference filter when P588 [Spd Ref Filter] is set to one of the "Custom" settings (3, 4, or 5). A gain value of zero results in a filter characteristic that behaves as a first order low pass. A gain value ranging between zero and one results in a lag type filter. A gain value greater than one results in a lead type filter. A gain value of one will disable (bypass) the filter. This is the default setting. This parameter has no units.	Default: Min/Max:	1.000 –/+5.000	RW	Real

File	Group	No.	Display Name Full Name Description	Values	Read-Write	Data Type
SPEED CONTROL	Speed Reference	591	**Spd Ref Sel Sts** Speed Reference Select Status		RO	32-bit Integer

Options	Reserved	Reserved	Reserved	Reserved	Reserved	Reserved	Reserved	Reserved	Reserved	Reserved	Reserved	Reserved	Reserved	Reserved	Reserved	Reserved	Skip Band	End Lmt Sw	Decel Lmt Sw	Unipolar Ref	Rev Disable	Bipolar Ref	Sel Override	Manual	Preset Auto	Trim Ref	Trim Pct Ref	MicroPsnMult	Ref B Mult	Ref A Mult	Ref B Auto	Ref A Auto
Default	0	0	0	0	0	0	0	0	0	0	0	0	0	0	0	0	0	0	0	0	0	0	0	0	0	0	0	0	0	0	0	0
Bit	31	30	29	28	27	26	25	24	23	22	21	20	19	18	17	16	15	14	13	12	11	10	9	8	7	6	5	4	3	2	1	0

0 = False
1 = True

Displays the operating status of the speed referencing section of the drive. Individual bits are provided to represent the following conditions:

Bit 0 "Ref A Auto" – When set, the Reference A Auto path is active.

Control Logic has selected the Speed Reference source A. The exact origin of this speed reference is determined by the parameter specified in P545 [Spd Ref A Sel]. This parameter should also be reported in P930 [Speed Ref Source].

Bit 1 "Ref B Auto" – When set, the Reference B Auto path is active.

Control Logic has selected the Speed Reference source B. The exact origin of this speed reference is determined by the value specified in P550 [Spd Ref B Sel]. This parameter should also be reported in P930 [Speed Ref Source].

Bit 2 "Ref A Mult" – When set, speed reference A is being modified by P549 [Spd Ref A Mult]. When clear, either the multiplier is 1 or is not affecting the speed reference because the Ref A Auto path is inactive.

Bit 3 "Ref B Mult" – When set, the speed reference B is being modified by P554 [Spd Ref B Mult]. When clear, either the multiplier is 1 or is not affecting the speed reference because the "Ref B Auto" path is inactive.

Bit 4 "MicroPsnMult" – When set, P592 [Selected Spd Ref] is being multiplied by P1112 [MicroPsnScalePct].

Bit 5 "Trim Pct Ref" – When set, the speed reference is summed with a portion of the reference that results from multiplying the reference by the value of the parameter indicated in P616 [SpdTrimPrcRefSrc].

Bit 6 "Trim Ref" – When set, the speed reference is being offset by the value of the parameter indicated in P617 [Spd Trim Source].

Bit 7 "Preset Auto" – When set, Control Logic has selected a preset auto speed reference. The P930 [Speed Ref Source] parameter will indicate the source of this reference.

Bit 8 "Manual" – When set, the speed reference selection is in one of the Manual positions due to P879 [Drive Logic Rslt] Bit 6 "Manual" being set. When P879, Bit 6 is clear, the speed reference selection is in one of the Auto positions. The result of the Auto/Manual speed reference selection can be seen in P592 [Selected Spd Ref].

Bit 9 "Sel Override" – The Selected Speed Reference parameter has been overridden by another reference. Refer to P930 [Speed Ref Source] for the cause of the override.

Bit 10 "Bipolar Ref" – When set, P308 [Direction Mode] = 1 "Bipolar." When in bipolar mode, the sign of the speed reference value will determine the direction of motor rotation.

Bit 11 "Rev Disable" – When set, P308 [Direction Mode] = 2 "Rev Disable." When in reverse disable mode, negative speed reference values are rejected and a zero speed value is used in their place.

Bit 12 "Unipolar Ref" – When set, P308 [Direction Mode] = 0 "Unipolar." When in unipolar mode, the sign of the speed reference value (and therefore direction of motor rotation) is determined by P879 [Drive Logic Rslt] Bit 4 "Forward" and Bit 5 "Reverse."

Bit 13 "Decel Lmt Sw" – When set, the Torque Proving function's control logic has detected a decel limit switch active and has selected P571 [Preset Speed 1] for the speed reference value.

Bit 14 "End Lim Sw" – When set, the Torque Proving function's control logic has detected an end limit switch active and has selected zero speed for the speed reference value.

Bit 15 "Skip Band" – When set, the Skip Band function has modified P2 [Commanded SpdRef]. When clear, the Skip Band function has not changed P2 [Commanded SpdRef].

File	Group	No.	Display Name Full Name Description	Values		Read-Write	Data Type
SPEED CONTROL	Speed Reference	592	**Selected Spd Ref** Selected Speed Reference Displays the value of the active speed reference.	Units: Default: Min/Max:	Hz RPM 0.00 –/+P27 [Motor NP Hertz] –/+P28 [Motor NP RPM]	RO	Real
		593	**Limited Spd Ref** Limited Speed Reference Displays the value of the speed reference after the following limits have been applied: P520 [Max Fwd Speed], P521 [Max Rev Speed], P522 [Min Fwd Speed] and P523 [Min Rev Speed].	Units: Default: Min/Max:	Hz RPM 0.00 –/+P27 [Motor NP Hertz] –/+P28 [Motor NP RPM]	RO	Real
		594	**Ramped Spd Ref** Ramped Speed Reference Displays the output of the speed reference ramp and S-curve functions, but prior to any corrections added by slip comp, PI, etc.	Units: Default: Min/Max:	Hz RPM 0.00 –/+P27 [Motor NP Hertz] –/+P28 [Motor NP RPM]	RO	Real
		595	**Filtered Spd Ref** Filtered Speed Reference Displays the output of the filter that is applied by P588 [Spd Ref Filter].	Units: Default: Min/Max:	Hz RPM 0.00 –/+P27 [Motor NP Hertz] –/+P28 [Motor NP RPM]	RO	Real
		596	**Speed Rate Ref** Speed Rate Reference This parameter is shared by both the Inertia Compensation and Speed Compensation functions. These functions are only available in the Flux Vector selections for P35 [Motor Ctrl Mode]. A value shared by both the Inertia Compensation and Speed Compensation functions (active only in FV motor control modes), typically supplied by an external controller that is also providing a rate limited speed reference. The Speed Rate Reference corresponds to the derivative with respect to time of the speed reference signal. Units of time are in seconds. For example, if the controller provides a 10 second reference ramp, the controller would also supply a Speed Rate Ref value of 1 pu / 10 sec = 0.1 sec-1 while the reference is accelerating. When the reference is constant, Speed Rate Ref should be zero.	Units: Default: Min/Max:	Hz RPM 0.00 –/+P27 [Motor NP Hertz] –/+P28 [Motor NP RPM]	RW	Real
		597	**Final Speed Ref** Final Speed Reference Displays the speed reference value, after all reference modifications (including ramps), that is used as a final reference by the speed regulator. In Open Loop, Sensorless Vector mode, this value represents the anticipated motor operating speed, and may differ slightly from the output frequency value due to slip compensation.	Units: Default: Min/Max:	Hz RPM 0.00 –/+P27 [Motor NP Hertz] –/+P28 [Motor NP RPM]	RO	Real

File	Group	No.	Display Name Full Name Description	Values		Read-Write	Data Type
SPEED CONTROL	Speed Trim	600 604	**Trim Ref A Sel** **Trim Ref B Sel** Trim Reference A, B Select Selects a trim source (in Hz or RPM) for Speed Reference A or Speed Reference B, respectively. For trim in % instead of Hz or RPM, use P608/612 (TrimPct Ref*n* Sel).	Default: Min/Max:	P601 [Trim Ref A Sel] P605 [Trim Ref B Stpt] 0 / 159999	RW	32-bit Integer
		601 605	**Trim Ref A Stpt** **Trim Ref B Stpt** Trim Reference A, B Setpoint A digital value to be used as a possible trim source for P600 or P604, respectively	Units: Default: Min/Max:	Hz RPM 0.00 –/+P27 [Motor NP Hertz] –/+P28 [Motor NP RPM] x 8	RW	Real

File	Group	No.	Display Name Full Name Description	Values		Read-Write	Data Type
SPEED CONTROL	Speed Trim	**602** **606**	**Trim RefA AnlgHi** **Trim RefB AnlgHi** Trim Reference A, B Analog High Used only when an analog input is selected as a trim source according to P600 or P604. Sets the amount of trim that corresponds to P51/61 [Anlg In*n* Hi] on an I/O module or on the main control (product dependent). This establishes scaling throughout the range.	Units: Default: Min/Max:	Hz RPM P520 [Max Fwd Speed] P521 [Max Rev Speed] / P520 [Max Fwd Speed]	RW	Real
		603 **607**	**Trim RefA AnlgLo** **Trim RefB AnlgLo** Trim Reference A, B Analog Low Used only when an analog input is selected as a trim source according to P600/604 [Trim Ref *n* Sel]. Sets the amount of trim that corresponds to P52/62 [Anlg In*n* Lo] on an I/O module or on the main control (product dependent). This establishes scaling throughout the range.	Units: Default: Min/Max:	Hz RPM 0.00 P521 [Max Rev Speed] / P520 [Max Fwd Speed]	RW	Real
		608 **612**	**TrmPct RefA Sel** **TrmPct RefB Sel** Trim Percent Reference A, B Select Selects a trim source (in %) for Speed Reference A or Speed Reference B, respectively. For trim in Hz or RPM instead of %, use P600/604 [Trim Ref *n* Sel].	Default: Min/Max:	P609 [TrmPct RefA Stpt] P613 [TrmPct RefB Stpt] 0 / 159999	RW	32-bit Integer
		609 **613**	**TrmPct RefA Stpt** **TrmPct RefB Stpt** Trim Percent Reference A, B Setpoint A digital value to be used a possible trim source for P608 or P612, respectively.	Units: Default: Min/Max:	% 0.000 –/+800.000	RW	Real
		610 **614**	**TrmPct RefA AnHi** **TrmPct RefB AnHi** Trim Percent Reference A, B Analog High Used only when an analog input is selected as a percent trim source according to P608 or P612. Sets the amount of trim that corresponds to P51/61 [Anlg In*n* Hi] on an I/O module or on the main control (product dependent). This establishes scaling throughout the range.	Units: Default: Min/Max:	% 100.00 –/+800.00	RW	Real
		611 **615**	**TrmPct RefA AnLo** **TrmPct RefB AnLo** Trim Percent Reference A, B Analog Low Used only when an analog input is selected as a percent trim source according to P608 or P612. Sets the amount of trim that corresponds to P52/62 [Anlg In*n* Lo] on an I/O module or on the main control (product dependent). This establishes scaling throughout the range.	Units: Default: Min/Max:	% 0.00 –/+800.00	RW	Real
		616	**SpdTrimPrcRefSrc** Speed Trim Percent Reference Source Displays the source of Motor Speed Reference Trim Percent, in the format SSPPPP, where SS indicates the source port number other than Port 0 and PPPP indicates the source parameter number. A value of zero indicates that a source has not been assigned.	Default: Min/Max:	0 0 / 159999	RO	32-bit Integer
		617	**Spd Trim Source** Speed Trim Source Displays the source of Motor Speed Reference Trim, in the format SSPPPP, where SS indicates the source port number other than Port 0 and PPPP indicates the source parameter number. A value of zero indicates that a source has not been assigned.	Default: Min/Max:	0 0 / 159999	RO	32-bit Integer

File	Group	No.	Display Name Full Name Description	Values		Read-Write	Data Type
SPEED CONTROL	Slip/Droop Comp	620	**Droop RPM at FLA** Droop Revolutions Per Minute at Full Load Amps Selects amount of droop that the speed reference is reduced when at full load torque. Zero disables the droop function.	Units: Default: Min/Max:	RPM 0.00 0.00 / 900.00	RW	Real
		621	**Slip RPM at FLA** Slip Revolutions Per Minute at Full Load Amps For open loop modes, this parameter sets the amount of slip (in rpm) that the motor is expected to experience at full load. A setting of zero disables slip compensation (not used in closed loop modes with encoder feedback). If the value of P70 [Autotune] is set to "Calculate", this value (in addition to others) is automatically calculated, and cannot be manually adjusted. This parameter cannot be changed unless P70 [Autotune] is set to 0 "Ready."	Units: Default: Min/Max:	RPM (P27 [Motor NP Hz] x 120) / (P31 [Motor Poles] – P28 [Motor NP RPM]) 0.00 / 1200.00	RW	Real
		622	**Slip Comp BW** Slip Compensation Bandwidth Adjusts the bandwidth of a low pass filter used for slip compensation. The response time of slip compensation will vary inversely with the setting of this filter.	Units: Default: Min/Max:	R/S 10.00 1.00 / 50.00	RW	Real
		623	**VHzSV SpdTrimReg** Volts per Hertz Sensorless Vector Speed Trim Regulator Displays the amount of trim that the slip compensation function dynamically adds (based on load) to final speed reference for improved open loop speed control. Not used in Flux Vector (FV) modes.	Units: Default: Min/Max:	Hz RPM 0.00 –/+P27 [Motor NP Hertz] x 8 –/+P28 [Motor NP RPM] x 8	RO	Real

File	Group	No.	Display Name Full Name Description	Values	Read-Write	Data Type
SPEED CONTROL	Speed Regulator	635	**Spd Options Ctrl** Speed Options Control		RW	16-bit Integer

Options	Reserved	Reserved	Reserved	Reserved	Reserved	Reserved	Reserved	Delayed Ref	Auto Tach SW	Jog No Integ	SpdErrFilter	SpdRegIntHld	SpdRegIntRes	StpNoSCrvAcc	Ramp Disable	Ramp Hold
Default	0	0	0	0	0	0	0	0	0	0	0	0	0	0	0	0
Bit	15	14	13	12	11	10	9	8	7	6	5	4	3	2	1	0

0 = False
1 = True

Configures options related to Speed Control as follows:

Bit 0 "Ramp Hold" – The output of the speed reference ramp will stop changing and hold its output constant while this bit is set. When this bit is clear, the ramp output will be allowed to change. If this bit becomes set while P594 [Ramped Spd Ref] is in the S Curve region, the S Curve will be allowed to complete before the output is held.

Bit 1 "Ramp Disable" – When set, the speed reference ramp will be bypassed. P594 [Ramped Spd Ref] will track the ramp input.

Bit 2 "StpNoSCrvAcc" – There are some conditions where the drive may continue to accelerate briefly following a request to stop. This will occur if the drive was in the process of accelerating on an S Curve when the stop request occurred. This bit enables an option to discontinue acceleration immediately when the stop request occurs. The S Curve profile that was in process will then change to a linear decel ramp.

Bit 3 "SpdRegIntRes" – When set, the P654 [Spd Reg Int Out] which is the output of the Vector mode speed regulator's integral term will be forced to zero. The same result can be achieved by setting the regulator's integral gain to zero.

Bit 4 "SpdRegIntHld" – When set, the P654 [Spd Reg Int Out] which is the output of the Vector mode speed regulator's integral term will stop changing and be held constant. Other conditions in the drive such as a limit condition in P945 [At Limit Status] may have the same result.

Bit 5 "SpdErrFilter" – When set, the speed error filter in the drive's Vector mode speed regulator will be configured for a single stage low pass filter. When clear, the error filter will be configured for a two stage low pass filter. The two stage configuration is the normal or default setting for the error filter.

Bit 6 "Jog No Integ" – When set, the P654 [Spd Reg Int Out] which is the output of the Vector mode speed regulator's integral term will be forced to zero while jogging.

Bit 7 "Auto Tach SW" – This bit is used to enable the Automatic Tach Switchover feature. This feature is used to switch motor velocity feedback sources from the Primary (P125) to Alternate (P128) source in the event that the primary source fails. This switchover can take place while the drive is running. The P936 [Drive Status 2] Bit 5 "FdbkLoss Sw0" will indicate clear when the Primary source is active and set when the alternate source is active.

- When using the Automatic Tach Switchover feature, the Feedback Loss Configuration parameter on the feedback module should be set to something other than fault.
- When using induction motors, clearing this bit when the alternate source is active will restore control to the Primary source, provided that the primary source is functioning.
- When using permanent magnet motors, cycling power to the drive will restore control to the Primary source, provided that the primary source is functioning. If this bit remains off, then the Automatic Tach Switchover feature will be disabled.

Important: The Primary feedback source uses the P126 [Pri Vel FdbkFltr] filter setting and tuning gains set in P636 [Speed Reg BW], P645 [Speed Reg Kp], and P647 [Speed Reg Ki]. The Alternate feedback sources uses the P129 [Alt Vel FdbkFltr] filter setting and tuning gains set in P648 [Alt Speed Reg BW], P649 [Alt Speed Reg Kp], and P650 [Alt Speed Reg Ki].

Bit 8 "Delayed Ref" – When this bit is set, an additional processor scan delay period is inserted between the P594 [Ramped Spd Ref] and the input to the Speed Reference filter. This delay is intended to be used in applications where multiple, coordinated drives are used. A drive that supplies the speed reference for use by other drives to follow would typically use this delay. The delay would allow time for the speed reference to reach the other units before it is acted upon by the sourcing unit, thereby synchronizing the speed reference among all units. When this bit is clear, no speed reference delay is inserted.

Bit 9 "NoSCrvSpdChg" – Set this bit to discontinue the S Curve acceleration/deceleration profile immediately when the actual speed reference changes while completing the desired S Curve. The S Curve profile restarts on the new acceleration/deceleration ramp.

File	Group	No.	Display Name Full Name Description	Values		Read-Write	Data Type
SPEED CONTROL	Speed Regulator	636	**Speed Reg BW** Speed Regulator Bandwidth Sets the speed loop bandwidth and determines the dynamic behavior of the speed loop. As bandwidth increases, the speed loop becomes more responsive and can track a faster changing speed reference. A change to this parameter will cause an automatic update of P645 [Speed Reg Kp], P647 [Speed Reg Ki] and P644 [Spd Err Fltr BW]. The configuration settings for Inertia Adaption (product dependent) will also be automatically selected when this feature is enabled. To disable the automatic gain and filter update, set this parameter to a value of zero. The maximum allowable value of this parameter will be limited by the ratio of P646 [Speed Reg Max Kp] to P76 [Total Inertia], and the type of speed feedback source in use (encoder vs. open loop). For operation following an Automatic Tach Switchover, the bandwidth specified in P648 [Alt Speed Reg BW] will be used.	Units: Default: Min/Max:	R/S Calculated 0.00 / Calculated	RW	Real

File	Group	No.	Display Name Full Name Description	Values		Read-Write	Data Type
SPEED CONTROL	Speed Regulator	637	**SReg FB Fltr Sel** Speed Regulator Feedback Filter Select Selects the amount of filtering applied to the feedback channel of the speed regulator, and is only active in FV motor control modes (P35). When set to any of the custom settings (3, 4, or 5) the filter is configured using the values set in P638 [SReg FB FltrGain] and P639 [SReg FB Fltr BW]. Settings 4 and 5 initialize the values for light and heavy respectively.	Default: Options:	0 = "Off" 0 = "Off" 1 = "Light" 2 = "Heavy" 3 = "Custom" 4 = "SetCustLight" 5 = "SetCustHeavy"	RW	32-bit Integer
		638	**SReg FB FltrGain** Speed Regulator Feedback Filter Gain Sets the gain of the speed regulator feedback filter when P637 [SReg FB Fltr Sel] is set to one of the "Custom" settings (3, 4, or 5). A gain value of zero results in a filter characteristic that behaves as a first order low pass. A gain value ranging between zero and one results in a lag type filter. A gain value greater than one results in a lead type filter. A gain value of one will disable (bypass) the filter.	Default: Min/Max:	0.700 –5.000 / 20.000	RW	Real
		639	**SReg FB Fltr BW** Speed Regulator Feedback Filter Bandwidth Sets the bandwidth of the speed regulator feedback filter when P637 [SReg FB Fltr Sel] is set to one of the "Custom" settings (3, 4, or 5). A value of zero will disable (bypass) the filter.	Units: Default: Min/Max:	R/S 35.00 0.00 / 3760.00	RW	Real
		640	**Filtered SpdFdbk** Filtered Speed Feedback Displays the output of the filter that is applied by P637 [SReg FB Fltr Sel].	Units: Default: Min/Max:	Hz RPM 0.00 –/+P27 [Motor NP Hertz] x 8 –/+P28 [Motor NP RPM] x 8	RO	Real
		641	**Speed Error** Speed Error Displays the error (difference) between the P597 [Final Speed Ref] (+) and the P640 [Filtered SpdFdbk] (–). This error signal is the primary input for the Vector control mode speed regulator.	Units: Default: Min/Max:	Hz RPM 0.00 –/+P27 [Motor NP Hertz] x 8 –/+P28 [Motor NP RPM] x 8	RO	Real
		642	755 **Servo Lock Gain** Servo Lock Gain Sets the gain of an additional integrator in the Vector control mode speed regulator. The effect of Servo Lock is to increase stiffness of the speed response to a load disturbance. It behaves like a position regulator with velocity feed forward, but without the pulse accuracy of a true position regulator. Gain should normally be set to less than 1/3 speed regulator bandwidth, or for the desired response. A value of zero disables this feature.	Units: Default: Min/Max:	/Sec 0.000 0.000 / 300.000	RW	Real
		643	**SpdReg AntiBckup** Speed Regulator Anti-backup Allows control of over-shoot/under-shoot in the step response of the Vector control mode speed regulator. Over-shoot/under-shoot can be effectively eliminated with a setting of 0.3, which will remove backup of the motor shaft when zero speed is reached. This parameter has no affect on the drive's response to load changes. A value of zero disables this feature. 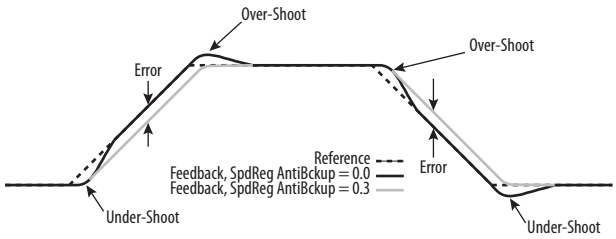 	Default: Min/Max:	0.0000 0.0000 / 0.5000	RW	Real

File	Group	No.	Display Name Full Name Description	Values		Read-Write	Data Type
SPEED CONTROL	Speed Regulator	**644**	**Spd Err Fltr BW** Speed Error Filter Bandwidth Sets the bandwidth of a 2nd order Butterworth low pass filter that is located in the proportional gain section of the speed regulator (in FV motor control modes). It filters a signal that is derived from P641 [Speed Error]. The purpose of this filter is to reduce quantization noise. When P636 [Speed Reg BW] is set to a non-zero value, this filter will be automatically set. If P636 [Speed Reg BW] is set to zero, this filter setting must be manually adjusted. It is normally set to at least 3 to 5 times the value of P636 [Speed Reg BW]. A value of zero disables the filter. The rules that are used to set the error filter bandwidth in automatic mode are as follows: 1. If the primary motor velocity feedback is Open Loop, then the error filter is set to 5 times P636 [Speed Reg BW]. 2. If a primary motor velocity feedback device has been selected and P704 [InAdp LdObs Mode] = 1 "InertiaAdapt," then the error filter is set to 3 times P636 [Speed Reg BW]. 3. If a primary motor velocity feedback device has been selected and P704 [InAdp LdObs Mode] = 0 "Disabled" or 2 "LoadObserver" then the error filter is using a table look up value determined by the setting of P126 [Pri Vel FdbkFltr]. **Important:** When Auto Tach Switchover is enabled through P635 [Spd Options Ctrl], this filter adjustment applies only to the primary feedback source. The filter setting P651 [AltSpdErr FltrBW] is used for the alternate feedback source.	Units: Default: Min/Max:	R/S 50.00 0.00 / 8000.00	RW	Real
		645	**Speed Reg Kp** Speed Regulator Kp Sets the proportional gain of the speed regulator (in FV motor control modes). This value is automatically calculated based on the bandwidth setting in P636 [Speed Reg BW] and P76 [Total Inertia]. The proportional gain may be manually adjusted by setting P636 [Speed Reg BW] to a value of zero. Proportional gain has effective scaling of (per unit torque) / (per unit speed). The maximum allowable value of this parameter is limited by P76 [Total Inertia] and P646 [Speed Reg Max Kp].	Default: Min/Max:	20.00 0.00 / P646 [Speed Reg Max Kp]	RW	Real
		646	**Speed Reg Max Kp** Speed Regulator Maximum Kp Limits the maximum value of P645 [Speed Reg Kp] and P649 [Alt Speed Reg Kp]. When gains are automatically calculated, this parameter is necessary to limit the amplification of noise with increased inertia.	Default: Min/Max:	3000.00 0.00 / 3000.00	RW	Real
		647	**Speed Reg Ki** Speed Regulator Ki Sets the integral gain of the speed regulator (in FV motor control modes). This value is automatically calculated based on the bandwidth setting in P636 [Speed Reg BW], P645 [Speed Reg Kp] and P653 [Spd Loop Damping]. Integral gain may be manually adjusted by setting P636 [Speed Reg BW] to a value of zero. Integral gain has effective scaling of (per unit torque/seconds) / (per unit speed).	Units: Default: Min/Max:	/Sec 50.00 0.00 / 100000.00	RW	Real
		648	**Alt Speed Reg BW** Alternate Speed Regulator Bandwidth Provides an independent setting for the same function as P636 [Speed Reg BW], but is active only when Automatic Feedback Loss Switchover occurs (indicated by Bit 5 of P936 [Drive Status 2]). A change to this parameter will cause an automatic update of P649 [Alt Speed Reg Kp], P650 [Alt Speed Reg Ki] and P651 [AltSpdErr FltrBW]. See P636 for additional information regarding speed regulator bandwidth. Also see P635 [Spd Options Ctrl] to enable the Auto Tach Switchover feature.	Units: Default: Min/Max:	R/S 10.00 0.00 / Calculated	RW	Real

File	Group	No.	Display Name Full Name Description	Values		Read-Write	Data Type
SPEED CONTROL	Speed Regulator	**649**	**Alt Speed Reg Kp** Alternate Speed Regulator Kp Provides an independent setting for the same function as P645 [Speed Reg Kp], but is active only when Automatic Feedback Loss Switchover occurs (indicated by Bit 5 of P936 [Drive Status 2]). This value is automatically calculated based on the bandwidth setting in P648 [Alt Speed Reg BW] and P76 [Total Inertia]. The proportional gain may be manually adjusted by setting P648 [Alt Speed Reg BW] to a value of zero.	Default: Min/Max:	20.00 0.00 / Calculated	RW	Real
		650	**Alt Speed Reg Ki** Alternate Speed Regulator Ki Provides an independent setting for the same function as P647 [Speed Reg Ki], but is active only when Automatic Feedback Loss Switchover occurs (indicated by Bit 5 of P936 [Drive Status 2]). This value is automatically calculated based on the bandwidth setting in P648 [Alt Speed Reg BW], P649 [Alt Speed Reg Kp] and P653 [Spd Loop Damping]. Integral gain may be manually adjusted by setting P648 [Alt Speed Reg BW] to a value of zero.	Default: Min/Max:	50.00 0.00 / 100000.00	RW	Real
		651	**AltSpdErr FltrBW** Alternate Speed Error Filter Bandwidth Provides an independent setting for the same function as P644 [Spd Err Fltr BW], but is active only when Automatic Feedback Loss Switchover occurs (indicated by Bit 5 of P936 [Drive Status 2]). When P648 [Alt Speed Reg BW] is set to a non-zero value, this filter setting will be automatically selected. If P648 [Alt Speed Reg BW] is set to zero, then this filter setting must be manually adjusted. An error filter value of 0 will disable the filter. This filter is normally set to at least 3 to 5 times the value of P648 [Alt Speed Reg BW]. Units for the error filter are radians/second (R/S). The rules that are used to set the error filter bandwidth in automatic mode are as follows: 1. If the alternate motor velocity feedback is Open Loop, then the error filter is set to 5 times P648 [Alt Speed Reg BW]. 2. If an alternate motor velocity feedback device has been selected and P704 [InAdp LdObs Mode] = 1 "InertiaAdapt," then the error filter is set to 3 times P648 [Alt Speed Reg BW]. 3. If an alternate motor velocity feedback device has been selected and P704 [InAdp LdObs Mode] 0 "Disabled" or 2 "LoadObserver" then the error filter is using a table look up value determined by the setting of P129 [Alt Vel FdbkFltr].	Units: Default: Min/Max:	R/S 50.00 0.00 / 8000.00	RW	Real
		652	**SReg Trq Preset** Speed Regulator Torque Preset Sets the initial value of P654 [Spd Reg Int Out]. This is the output of the vector speed regulator's integral channel, and will be present in P654 [Spd Reg Int Out] when the regulator is first enabled (for example, upon rise of start or jog). The normal, default setting for this parameter is zero. In some applications, it may be necessary to preset the speed regulator integrator to a non-zero setting. This will result in the regulator's output reaching its final steady state value sooner than it would if the integrator started from zero.	Units: Default: Min/Max:	% 0.00 –/+800.00	RW	Real
		653	**Spd Loop Damping** Speed Loop Damping Sets the damping factor of the vector speed loop's characteristic equation. Damping will affect the integral gain when a non-zero bandwidth has been entered. A damping factor of 1.0 is considered critical damping. Lowering the damping will produce faster load disturbance rejection, but may cause a more oscillatory response. When the speed regulator bandwidth is zero, gains are set manually and damping factor has no effect.	Default: Min/Max:	1.0000 0.5000 / 65.0000	RW	Real

File	Group	No.	Display Name Full Name Description	Values		Read-Write	Data Type
SPEED CONTROL	Speed Regulator	654	**Spd Reg Int Out** Speed Regulator Integrator Output Displays the current value of the vector speed regulator's integral channel. A value of 100% represents rated motor torque.	Units: Default: Min/Max:	% 0.00 –/+800.00	RO	Real
		655	**Spd Reg Pos Lmt** Speed Regulator Positive Limit Adjusts the upper limit of the vector speed regulator's output. A value of 100% represents rated motor torque.	Units: Default: Min/Max:	% 300.00 0.00 / 600.00	RW	Real
		656	**Spd Reg Neg Lmt** Speed Regulator Negative Limit Adjusts the lower limit of the vector speed regulator's output. A value of 100% represents rated motor torque.	Units: Default: Min/Max:	% –300.00 –600.00 / 0.00	RW	Real
		657	**SReg OutFltr Sel** Speed Regulator Output Filter Select Selects the amount of filtering applied to the vector speed regulator's output. When set to any of the custom settings (3, 4, or 5) the filter is configured using the values set in P658 [SReg OutFltrGain] and P659 [SReg OutFltr BW]. Settings 4 and 5 initialize the values for light and heavy respectively.	Default: Options:	0 = "Off" 0 = "Off" 1 = "Light" 2 = "Heavy" 3 = "Custom" 4 = "SetCustLight" 5 = "SetCustHeavy"	RW	32-bit Integer
		658	**SReg OutFltrGain** Speed Regulator Output Filter Gain Sets the gain of the vector speed regulator's output filter when P657 [SReg OutFltr Sel] is set to one of the "Custom" settings (3, 4, or 5). A gain value of zero results in a filter characteristic that behaves as a first order low pass. A gain value ranging between zero and one results in a lag type filter. A gain value greater than one results in a lead type filter. A gain value of one will disable (bypass) the filter.	Default: Min/Max:	1.000 –/+5.000	RW	Real
		659	**SReg OutFltr BW** Speed Regulator Output Filter Bandwidth Sets the bandwidth of the speed regulator's output filter when P657 [SReg OutFltr Sel] is set to one of the "Custom" settings (3, 4, or 5). A value of zero will disable (bypass) the filter.	Units: Default: Min/Max:	R/S 35.00 0.00 / 3760.00	RW	Real
		660	**SReg Output** Speed Regulator Output Displays the output of the vector speed regulator. This signal will be routed to the P685 [Selected Trq Ref] when P313 [Actv SpTqPs Mode] has selected the output of the speed regulator. A value of 100% represents rated motor torque.	Units: Default: Min/Max:	% 0.00 –/+ 800.00	RO	Real
		663	**VHzSV Spd Reg Kp** Volts per Hertz Sensorless Vector Speed Regulator Proportional Gain Adjusts the proportional gain of the Speed Regulator used in non-vector modes according to P35 [Motor Ctrl Mode]. The output of this regulator will adjust P623 [VHzSV SpdTrimReg] when P131 [Active Vel Fdbk] originates from a feedback device.	Default: Min/Max:	20.00 0.00 / 3000.00	RW	Real
		664	**VHzSV Spd Reg Ki** Volts per Hertz Sensorless Vector Speed Regulator Integral Gain Adjusts the integral gain of the Speed Regulator used in non-vector modes according to P35 [Motor Ctrl Mode]. The output of this regulator will adjust P623 [VHzSV SpdTrimReg] when P131 [Active Vel Fdbk] originates from a feedback device.	Units: Default: Min/Max:	/Sec 50.00 0.00 / 100000.00	RW	Real

File	Group	No.	Display Name Full Name Description	Values		Read-Write	Data Type
SPEED CONTROL	Speed Comp	**665**	**Speed Comp Sel** Speed Compensation Select Configures the Speed Compensation function, which is used in Vector Control modes to create a feed forward compensation that is added into the speed reference. This helps compensate for position tracking errors during acceleration. These tracking errors are caused by the sample and hold process and delays caused by the position to velocity FIR filter. Speed Compensation will help reduce position error in position follower applications. Available settings for this parameter are: "Disabled" (0) – Function is disabled, speed compensation does not affect the speed reference. "Ramped Ref" (1) – Speed compensation function is enabled and uses an internally generated ramped speed reference signal. The rate of change (derivative) of the speed reference becomes the input to the Speed Compensation function. This is the most common setting when speed compensation is in use. "Rate Ref" (2) – Speed compensation function is enabled and uses an externally generated speed rate signal. The rate of change or derivative of the speed reference is supplied by P596 [Speed Rate Ref]. This signal is typically supplied by an external controller when the speed reference ramp is generated external to the drive.	Default: Options:	0 = "Disabled" 0 = "Disabled" 1 = "Ramped Ref" 2 = "Rate Ref"	RW	32-bit Integer
		666	**Speed Comp Gain** Speed Compensation Gain Adjusts the magnitude of P667 [Speed Comp Out]. This gain can be either manually set or automatically determined as part of automatic gain mode for Vector speed control. Automatic mode can be activated by selecting a motor speed feedback device in P125 [Pri Vel Fdbk Sel] and setting a non-zero speed regulator bandwidth in P636 [Speed Reg BW]. In automatic mode, the gain is calculated internally using a table lookup from the interrupt times and delays of the speed feedback FIR filter. For any other case – non-vector control, open loop speed feedback, or zero bandwidth setting, the speed compensation gain must be manually adjusted.	Default: Min/Max:	–2.50 –/+32767.00	RW	Real
		667	**Speed Comp Out** Speed Compensation Output Displays the output of the Speed Compensation function. This value will be summed with the speed reference, following the application of P555 [Spd Ref Scale].	Units: Default: Min/Max:	Hz RPM 0.00 –/+P27 [Motor NP Hertz] x 8 –/+P28 [Motor NP RPM] x 8	RO	Real

Drive (Port 0) Torque Control File

File	Group	No.	Display Name Full Name Description	Values		Read-Write	Data Type
TORQUE CONTROL	Torque Limits	670	**Pos Torque Limit** Positive Torque Limit Defines the torque limit for the positive torque reference value. The reference will not be allowed to exceed this value. Only active in Flux Vector (FV) motor control modes (P35).	Units: Default: Min/Max:	% 200.00 0.00 / 800.00	RW	Real
		671	**Neg Torque Limit** Negative Torque Limit Defines the torque limit for the negative torque reference value. The reference will not be allowed to exceed this value. Only active in Flux Vector (FV) motor control modes (P35).	Units: Default: Min/Max:	% –200.00 –800.00 / 0.00	RW	Real

File	Group	No.	Display Name Full Name Description	Values		Read-Write	Data Type
TORQUE CONTROL	Torque Reference	675 680	**Trq Ref A Sel** **Trq Ref B Sel**  Torque Reference A, B Select Selects the source for a torque reference, used when the drive is configured to command torque according to P309…312 [SpdTrqPsn Mode *n*]. The values of the torque reference sources are added together to provide a single torque reference. Only active in Flux Vector (FV) motor control modes (P35).	Default: Min/Max:	676 681 0 / 159999	RW	32-bit Integer
		676 681	**Trq Ref A Stpt** **Trq Ref B Stpt** Torque Reference A, B Setpoint A digital torque value to be used as a possible source for P675 and P680 respectively. Only active in Flux Vector (FV) motor control modes (P35).	Units: Default: Min/Max:	% 0.00 –/+800.00	RW	Real
		677 682	**Trq Ref A AnlgHi** **Trq Ref B AnlgHi** Torque Reference A, B Analog High Used only when an analog input is selected as a torque reference according to P676 or P681. Sets the torque value that corresponds to P51/61 [Anlg In*n* Hi] on an I/O module or on the main control (product dependent). This establishes scaling throughout the range. Only active in Flux Vector (FV) motor control modes (P35).	Units: Default: Min/Max:	% 100.00 –/+800.00	RW	Real
		678 683	**Trq Ref A AnlgLo** **Trq Ref B AnlgLo** Torque Reference A, B Analog Low Used only when an analog input is selected as a torque reference according to P676 or P681. Sets the torque value that corresponds to P52/62 [Anlg In*n* Lo] on an I/O module or on the main control (product dependent). This establishes scaling throughout the range. Only active in Flux Vector (FV) motor control modes (P35).	Units: Default: Min/Max:	% 0.00 –/+800.00	RW	Real
		679 684	**Trq Ref A Mult** **Trq Ref B Mult** Torque Reference A, B Multiplier A multiplier that is applied to the values referenced by P675 and P680 respectively. A value of 1 leaves the reference unaffected. Negative values invert the reference. Only active in Flux Vector (FV) motor control modes (P35).	Default: Min/Max:	1.000 –/+1000.000	RW	Real

File	Group	No.	Display Name Full Name Description	Values		Read-Write	Data Type
TORQUE CONTROL	Torque Reference	**685**	**Selected Trq Ref** Selected Torque Reference Displays the torque value of the selected torque reference (dynamic selection according to P313 [Actv SpTqPs Mode]). This value will be summed with P686 [Torque Step]. The result is then applied to the input of the notch filter located in the Vector torque reference section. Only active in Flux Vector (FV) motor control modes (P35).	Units: Default: Min/Max:	% 0.00 –/+800.00	RO	Real
		686	**Torque Step** Torque Step Defines the amount of torque reference step change to simulate a load disturbance, used to test the response. This value is added to the main torque reference P685 [Selected Trq Ref], and then applied to the input of the notch filter located in the Vector control torque reference section. Only active in Flux Vector (FV) motor control modes (P35).	Units: Default: Min/Max:	% 0.00 –/+800.00	RW	Real
		687	**Notch Fltr Freq** Notch Filter Frequency The center frequency for the Notch filter located in the Vector control torque reference section. To disable, set to zero (0). Only active in Flux Vector (FV) motor control modes (P35).	Units: Default: Min/Max:	Hz 0.00 0.00 / 500.00	RW	Real
		688	**Notch Fltr Atten** Notch Filter Attenuation Sets the attenuation of the notch filter located in the Vector control torque reference section. Attenuation is the ratio of the notch filter input signal to its output at the P687 [Notch Fltr Freq]. An attenuation of 30 means that the notch output is 1/30th of the input at the specified frequency. Only active in Flux Vector (FV) motor control modes (P35). 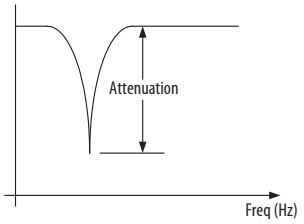	Default: Min/Max:	50.000 0.000 / 10000.000	RW	Real
		689	**Filtered Trq Ref** Filtered Torque Reference Displays the output of the notch filter defined by P687 and P688. If P704 [InAdp LdObs Mode] indicates that either the Inertia Adaption or Load Estimate functions are active, then the filtered torque reference will also be modified by these functions. Only active in Flux Vector (FV) motor control modes (P35).	Units: Default: Min/Max:	% 0.00 –/+800.00	RO	Real
		690	**Limited Trq Ref** Limited Torque Reference Displays the torque reference value after filtering (P689), power limits, torque limits, and current limits have been applied. P945 [At Limit Status] indicates what limiting conditions are active. Motor power limits are set by P426 [Regen Power Lmt] and P427 [Motor Power Lmt]. Motor torque limits are set by P670 [Pos Torque Limit] and P671 [Neg Torque Limit]. Motor current limit is set by P422 [Current Limit 1] or P423 [Current Limit 2]. Only active in Flux Vector (FV) motor control modes (P35).	Units: Default: Min/Max:	% 0.00 –/+800.00	RO	Real

File	Group	No.	Display Name Full Name Description	Values		Read-Write	Data Type
TORQUE CONTROL	Inertia Comp	695	755 **Inertia CompMode** Inertia Compensation Mode The inertia compensation function calculates a feed forward torque signal P699 [Inertia Comp Out]. Inertia compensation attempts to predict the motor torque required to accelerate and decelerate an inertial load. The P699 [Inertia Comp Out] signal is summed with P660 [SReg Output] and becomes an input available to the P313 [Actv SpTqPs Mode] selector. The inputs to the inertia comp function are the rate of change of motor speed reference and P76 [Total Inertia]. Only active in Flux Vector (FV) motor control modes (P35). This parameter enables the inertia comp function and selects possible sources of motor speed reference as follows: "Disabled" (0) – Inertia compensation function is disabled. P699 [Inertia Comp Out] is zero so the motor torque reference is not affected. "Int Ramp Ref" (1) – Inertia compensation is enabled. The function is configured to use the rate of change of P595 [Filtered Spd Ref]. This is the typical setting that should be used for inertia compensation on a stand-alone drive. "Ext Ramp Ref" (2) – Inertia compensation is enabled. The function is configured to use the rate of change of P700 [Ext Ramped Ref]. This setting is available for applications that supply a ramped speed reference external to the drive. "Spd Rate Ref" (3) – Inertia compensation is enabled. The function is configured to use the P596 [Speed Rate Ref]. This parameter should contain a value that represents the rate of change of the motor speed reference. This setting is available for applications that supply a ramped speed reference external to the drive.	Default: Options:	0 = "Disabled" 0 = "Disabled" 1 = "Int Ramp Ref" 2 = "Ext Ramp Ref" 3 = "Spd Rate Ref"	RW	32-bit Integer
		696	755 **Inertia Acc Gain** Inertia Acceleration Gain Sets the acceleration gain for the inertia compensation function. A value of 1 produces 100% compensation. Only active in Flux Vector (FV) motor control modes (P35).	Default: Min/Max:	1.0000 0.0000 / 2.0000	RW	Real
		697	755 **Inertia Dec Gain** Inertia Deceleration Gain Sets the deceleration gain for the inertia compensation function. A value of 1 produces 100% compensation. Only active in Flux Vector (FV) motor control modes (P35).	Default: Min/Max:	1.0000 0.0000 / 2.0000	RW	Real
		698	755 **Inert Comp LPFBW** Inertia Compensation Low Pass Filter Bandwidth Sets the bandwidth of a low pass filter for the inertia compensation function. The output of this filter supplies P699 [Inertia Comp Out].Only active in Flux Vector (FV) motor control modes (P35).	Units: Default: Min/Max:	R/S 35.00 0.00 / 2000.00	RW	Real
		699	755 **Inertia Comp Out** Inertia Compensation Output Displays the output of the inertia compensation function. The P699 [Inertia Comp Out] signal is summed with P660 [SReg Output] and becomes an input available to the P313 [Actv SpTqPs Mode] selector. Inertia compensation provides a torque feed forward signal during changes in motor speed reference.Only active in Flux Vector (FV) motor control modes (P35).	Units: Default: Min/Max:	% 0.00 –/+800.00	RO	Real
		700	755 **Ext Ramped Ref** External Ramped Reference This parameter is meant for an external motor speed ramp input signal. This signal will be used by the inertia compensation function when P695 [InertiaComp Mode] = 2 "Ext Ramp Ref." This parameter will be entered in units of Hz or RPM, depending on the value of P300 [Speed Units].Only active in Flux Vector (FV) motor control modes (P35).	Units: Default: Min/Max:	Hz RPM 0.00 –/+P27 [Motor NP Hertz] x 8 –/+P28 [Motor NP RPM] x 8	RW	Real

File	Group	No.	Display Name Full Name Description	Values		Read-Write	Data Type
TORQUE CONTROL	Inertia Adaption	**704**	755 **InAdp LdObs Mode** Inertia Adaption Load Observer Mode Used to enable operation of either Inertia Adaption or Load Observer. These System Control modes are only available in Vector Control mode when using a motor speed feedback device. The value of P76 [Total Inertia] must be valid in order for these features to work correctly. The P70 [Autotune] setting 4 "Inertia Tune" can be used to measure the System Inertia. Regardless of the Sys Control mode used, the parameter P707 [Load Estimate] is updated for monitoring purposes. Only active in Flux Vector (FV) motor control modes (P35). The possible settings for Sys Control Sel are: "Disabled" (0) – Both Inertia Adaption and Load Observer functions are disabled. P708 [InertiaTrqAdd] is zero so the motor torque reference is not affected. P707 [Load Estimate] is still valid, provided that the drive is in Vector Mode, using a motor speed feedback device, and a valid P76 [Total Inertia] is used. "InertiaAdapt" (1) – Inertia Adaption function is enabled. The Inertia Adaption function will provide enhanced stability, higher bandwidths and dynamic stiffness. Inertia Adaption is especially useful in systems with a gear-box that become, in effect, disconnected from the load. Inertia Adaption may also be used for motors with very little inertia that otherwise would lack dynamic stiffness, even at high bandwidths. The output of the Inertia Adaption function P708 [InertiaTrqAdd], will subtract from the motor torque reference. "LoadObserver" (2) – Load Observer function is enabled. The Load Observer function removes or greatly reduces the effects of load disturbances and provides quicker system response. The output of the Load Observer function is similar to P707 [Load Estimate], but has a filter setting determined by P711 [Load Observer BW]. The Load Observer's output signal will add to the motor torque reference.	Default: Options:	0 = "Disabled" 0 = "Disabled" 1 = "InertiaAdapt" 2 = "LoadObserver"	RW	32-bit Integer
		705	755 **Inertia Adapt BW** Inertia Adapt Bandwidth Sets the bandwidth of a low pass filter located in the output of the Inertia Adaption function. This parameter should typically be set to match the bandwidth of the drive's speed regulator. This matching setting is automatically made when the Inertia Adaption function is active and the speed regulator bandwidth (P636 [Speed Reg BW]), is set to a non-zero value. If the speed regulator bandwidth is set to zero, then this filter setting must be manually adjusted.Only active in Flux Vector (FV) motor control modes (P35).	Units: Default: Min/Max:	R/S 10.00 1.00 / 1000.00	RW	Real
		706	755 **InertiaAdaptGain** Inertia Adaption Gain Sets a multiplier of system inertia used when the Inertia Adaption function is selected P704 [InAdp LdObs Mode] = 1 "InertiaAdapt." This gain has no effect on the parameter P707 [Load Estimate]. Higher gain values may cause high frequency ringing, while smaller values may cause fundamental load instability. This gain should typically range from 0.3 to 1.0 with 0.5 nominal best. The gain setting of 0.5 is automatically made when the speed regulator bandwidth (P636 [Speed Reg BW]), is set to a non-zero value. If the speed regulator bandwidth is set to zero, then this gain setting must be manually adjusted.Only active in Flux Vector (FV) motor control modes (P35).	Default: Min/Max:	0.500 0.300 / 1.000	RW	Real
		707	755 **Load Estimate** Load Estimate Displays an estimated load torque value for the drive. This value is only available in Vector Control mode when using a motor speed feedback device. The load estimate does not include any torque required to accelerate or decelerate the motor. In order to be accurate, the parameter P76 [Total Inertia] must contain a reasonably accurate value.Only active in Flux Vector (FV) motor control modes (P35).	Units: Default: Min/Max:	% 0.00 –/+800.00	RO	Real

File	Group	No.	Display Name Full Name Description	Values		Read-Write	Data Type
TORQUE CONTROL	Inertia Adaption	**708**	755 **InertiaTrqAdd** Inertia Torque Adaption Displays the output of the Inertia Adaption function. This value will be subtracted from the motor torque reference, with the result displayed as P689 [Filtered Trq Ref]. The inertia adaption function will be active when operating in Vector Control mode with a motor speed feedback device and P704 [InAdp LdObs Mode] = 1 "InertiaAdapt." A value of 100% represents rated motor torque. Only active in Flux Vector (FV) motor control modes (P35).	Units: Default: Min/Max:	% 0.00 –/+800.00	RO	Real
		709	755 **IA LdObs Delay** Inertia Adaption Load Observer Delay Adjusts a filter setting that is applied to the active motor velocity feedback source. The purpose of this filter is to reduce the level of noise present in the feedback signal. Note that this filter is the same type but separate from the filters used to provide P127 [Pri Vel Feedback] and P130 [Alt Vel Feedback]. The derivative of the Sys Control Delay filtered motor velocity signal will be a Motor Acceleration Feedback signal. The Motor Acceleration Feedback is applied to the Inertia Adaption and Load Observer/ Load Estimate functions. This is moving average type filter that has a delay setting of N, where N is an integer number (0, 1, 2 . . .). A setting of zero provides no filtering and no delay. Larger values of N result in more filtering and more delay. The best setting for this filter will depend on the level of noise present in the feedback signal and the bandwidth setting of the velocity regulator. Only active in Flux Vector (FV) motor control modes (P35).	Default: Options:	3 = "50R/S Noise" 0 = "190R/S Noise" 1 = "160R/S Noise" 2 = "100R/S Noise" 3 = "50R/S Noise" 4 = "25R/S Noise" 5 = "12R/S Noise" 6 = "6R/S Noise" 7 = "3R/S Noise"	RW	32-bit Integer
		710	755 **InertAdptFltrBW** Inertia Adaption Filter Bandwidth Sets the bandwidth of a low pass filter located in the output of the vector control speed regulator and used in connection with the Inertia Adaption function. The bandwidth of this filter should typically be set to five times the bandwidth of the speed regulator. This setting is automatically made when the Inertia Adaption function is active and the speed regulator bandwidth (P636 [Speed Reg BW]), is set to a non-zero value. If the speed regulator bandwidth is set to zero, then this filter setting must be manually adjusted. Only active in Flux Vector (FV) motor control modes (P35).	Units: Default: Min/Max:	R/S 50.00 0.00 / 1000.00	RW	Real
		711	755 **Load Observer BW** Load Observer Bandwidth Sets the bandwidth of a low pass filter located in the output of the Load Observer function. Typical filter settings range from 10 radians/second to 150 radians/second with the higher values being more responsive to disturbances but with increased system noise. There is no nominal best setting, but 40 radians/second is a suggested starting point. This selection may not function well in sloppy geared systems. Only active in Flux Vector (FV) motor control modes (P35).	Units: Default: Min/Max:	R/S 40.00 1.00 / 1000.00	RW	Real

File	Group	No.	Display Name Full Name Description	Values		Read-Write	Data Type
TORQUE CONTROL	Friction Comp	1560	755 **FrctnComp Mode** Friction Compensation Mode The friction compensation function calculates a feed forward torque signal P1567 [FrctnComp Out]. Friction compensation attempts to predict the motor torque required to counteract load friction. The [FrctnComp Out] signal is summed with P685 [Selected Trq Ref] and P686 [Torque Step]. This parameter enables the friction comp function and selects possible sources of motor speed reference as follows: "Disabled" (0) – Friction compensation function is disabled. P1567 [FrctnComp Out] is zero so the motor torque reference is not affected. "Int Ramp Ref" (1) – Friction compensation is enabled. The function is configured to use the P595 [Filtered Spd Ref] summed with the position reference speed feed forward. This is the typical setting that should be used for friction compensation on a stand-alone drive when operating in position or speed mode. "Ext Ramp Ref" (2) – Friction compensation is enabled. The function is configured to use P700 [Ext Ramped Ref]. This setting is available for applications that supply a ramped speed reference external to the drive. "Speed Fdbk" (3) – Friction compensation is enabled. The function is configured to use P640 [Filtered SpdFdbk]. A feedback device must be used – the speed feedback source cannot be open loop feedback. This setting should be used when operating in torque mode (min/max/torque).	Default: Options:	0 = "Disabled" 0 = "Disabled" 1 = "Int Ramp Ref" 2 = "Ext Ramp Ref" 3 = "Speed Fdbk"	RW	32-bit Integer
		1561	755 **FrctnComp Trig** Friction Compensation Trigger Sets the starting speed or trigger speed at which the friction compensation will be applied when leaving the region near zero speed. The initial value for P1567 [FrctnComp Out] at this speed will be P1564 [FrctnComp Stick]. Friction compensation will remain active until the speed reference drops below the trigger speed minus P1562 [FrctnComp Hyst] speed. At these low speeds, 1567 [FrctnComp Out] returns to zero.	Units: Default: Min/Max:	Hz RPM 0.15 0.00 / 7.94	RW	Real
		1562	755 **FrctnComp Hyst** Friction Compensation Hysteresis This parameter together with 1561 [FrctnComp Trig] establishes a speed band around zero speed. Friction compensation will be inactive (zero output) when the speed reference is inside this band and active when outside. The points at which friction comp becomes active and inactive differ by the amount of speed set in this parameter.	Units: Default: Min/Max:	Hz RPM 0.06 0.00 / 7.94	RW	Real
		1563	755 **FrctnComp Time** Friction Compensation Time Sets the time interval that the stiction torque will be applied. When initially leaving the zero speed region, the value in P1564 [FrctnComp Stick] will be used for the non-viscous friction term. After the time period set in this parameter, the non-viscous friction will ramp down to the value set in P1565 [FrctnComp Slip]. For the remainder of the time that [FrctnComp Out] remains non-zero, the non-viscous friction will remain constant at the value of [FrctnComp Slip].	Units: Default: Min/Max:	mSec 6 0 / 18	RW	32-bit Integer
		1564	755 **FrctnComp Stick** Friction Compensation Stiction Sets the level for the stiction or static friction torque. This is the torque level required to break away from zero speed. When initially leaving the zero speed region, this level will be used for the non-viscous friction term. After the time period set in P1563 [FrctnComp Time], the non-viscous friction will ramp down to the value set in P1565 [FrctnComp Slip].	Units: Default: Min/Max:	% 15.00 0.00 / 800.00	RW	Real

File	Group	No.	Display Name Full Name Description	Values		Read-Write	Data Type
TORQUE CONTROL	Friction Comp	1565	755 **FrctnComp Slip** Friction Compensation Slip Sets the torque level that will be maintained at very low speed once “break away” has been achieved. This value should always be set less than the level in P1564 [FrctnComp Stick]. After the time period set in P1563 [FrctnComp Time], the non-viscous friction will ramp down to this value.	Units: Default: Min/Max:	% 10.00 0.00 / 800.00	RW	Real
		1566	755 **FrctnComp Rated** Friction Compensation Rated Sets the torque level that will be output at rated motor speed. The friction compensation routine assumes a linear viscous component that varies in direct proportion to speed reference. The 1567 [FrctnComp Out] value will increase with speed and will equal the level set in this parameter at rated motor speed.	Units: Default: Min/Max:	% 20.00 0.00 / 800.00	RW	Real
		1567	755 **FrctnComp Out** Friction Compensation Output Displays the torque reference output of the Friction Compensation function. This value is summed with P660 [SReg Output] and P699 [Inertia Comp Out] in the torque control section of the drive.	Units: Default: Min/Max:	% 0.00 –/+800.00	RO	Real

Drive (Port 0) Position Control File

File	Group	No.	Display Name Full Name Description	Values	Read-Write	Data Type
POSITION CONTROL	Position Cfg/Sts	720	**PTP PsnRefStatus** Point-To-Point Position Reference Status Displays the current operating status of the Point-To-Point Position Planner in the Position Referencing.		RO	16-bit Integer
		721	**Position Control** Position Control Sets bits to enable various position control functions.		RW	32-bit Integer

720 PTP PsnRefStatus

Options

	Reserved	Reserved	Reserved	Reserved	Reserved	Reserved	Reserved	Reserved	Reserved	Reserved	Reserved	Reserved	SpdFFRef En	PTP Int Hold	Ref Complete	ZeroFFSpdRef
Default	0	0	0	0	0	0	0	0	0	0	0	0	0	0	0	0
Bit	15	14	13	12	11	10	9	8	7	6	5	4	3	2	1	0

0 = False
1 = True

Bit 0 "ZeroFFSpdRef" – Indicates the speed feed forward reference P783 [PTP Speed FwdRef] is zero.

Bit 1 "Ref Complete" – Indicates the position point-to-point feedback P777 [PTP Feedback] reaches the position point-to-point reference P784 [PTP Command], and the speed forward reference P783 [PTP Speed FwdRef] reaches zero.

Bit 2 "P2P Int Hold" – Indicates the position point-to-point planner integrator is holding. Read back of the point-to-point integral hold bit P770 [PTP Control] Bit 4 "Intgrtr Hold."

Bit 3 "SpdFFRef En" – Indicates the speed feed forward reference P783 [PTP Speed FwdRef] is active.

721 Position Control

Options

	Reserved	Reserved	Reserved	Reserved	Reserved	Reserved	Reserved	Reserved	Reserved	Reserved	Reserved	Reserved	Reserved	Reserved	Reserved	Reserved	Reserved	Reserved	Reserved	Reserved	Reserved	Add Spd Ref	PsnWatch2Dir (1)	PsnWtch2Arm (1)	PsnWatch1Dir (1)	PsnWtch1Arm (1)	Intgrtr Hold	Zero Psn	OffsetVel En	Offset ReRef	Intgrtr En	Reserved
Default	0	0	0	0	0	0	0	0	0	0	0	0	0	0	0	0	0	0	0	0	0	0	0	0	0	0	0	0	0	0	0	0
Bit	31	30	29	28	27	26	25	24	23	22	21	20	19	18	17	16	15	14	13	12	11	10	9	8	7	6	5	4	3	2	1	0

(1) 755 drives only.

0 = Disabled
1 = Enabled

Bit 1 "Intgrtr En" – Enables integrator operation. Resetting it resets the integrator.

Bit 2 "Offset ReRef" – Permits changing the value of position offsets without changing actual position. The position offsets are the values that are selected by P820 [Psn Offset 1 Sel] and P822 [Psn Offset 2 Sel]. The default position offsets are P821 [Psn Offset 1] and P823 [Psn Offset 2].

Bit 3 "OffsetVel En" – Uses the offset velocity P824 [Psn Offset Vel] for the position offset integrator. Sets the offset integrator bit, P724 [Psn Reg Status] Bit 0 "OffsetIntgtr" when this bit is on.

Bit 4 "Zero Psn" – Puts P836 [Psn Actual] in absolute mode (no differential) with zero position offset. P836 [Psn Actual] sets the value of P847 [Psn Fdbk] - the position P725 [Zero Position]. With Bit 4 "Zero Psn" disabled, P836 [Psn Actual] accumulates the difference in P847 [Psn Fdbk] at each position control scan. P836 [Psn Actual] and P847 [Psn Fdbk] are not always the same and therefore, P836 [Psn Actual] is reset. With Bit 4 "Zero Psn" set, P836 [Psn Actual] directly loads the raw value of P847 after subtracting P725 [Zero Position].

Bit 5 "Intgrtr Hold" – Holds the position integrator in present state.

Bit 6 "PsnWtch1Arm" – Enables the position watch 1. Resetting this bit clears the position watch 1 detection P724 [Psn Reg Status] Bit 9 "PsnW1Detect."

Bit 7 "PsnWatch1Dir" – Causes the position watch 1 output to be set when P746 [PsnWatch1 DtctIn] is greater than a set-point selected by the position watch 1 selection P745 [PsnWatch1 Select]. Resetting this bit causes the position watch 1 output to be set when P746 [PsnWatch1 DtctIn] is less than a set-point selected by the position watch 1 selection P745 [PsnWatch1 Select].

Bit 8 "PsnWtch2Arm" – Enables the position watch 2. Resetting this bit clears the position watch 2 detection P724 [Psn Reg Status] Bit 10 "PsnW2Detect."

Bit 9 "PsnWatch2Dir" – Causes the position watch 2 output to be set when P749 [PsnWatch2 DtctIn] is greater than a set-point selected by the position watch 2 selection P748 [PsnWatch2 DtctIn]. Resetting this bit causes the position watch 2 output to be set when P749 [PsnWatch2 DtctIn] is less than a set-point selected by the position watch 2 selection P748 [PsnWatch2 DtctIn].

Bit 10 "Add Spd Ref" – Adds the speed reference to the output of the position control, when in position control mode.

File	Group	No.	Display Name Full Name Description	Values		Read-Write	Data Type
POSITION CONTROL	Position Cfg/Sts	722	**Psn Selected Ref** Position Selected Reference Indicates output of the position referencing. When the Spd/Torq/Pos mode P313 [Actv SpTqPs Mode] is the position direct mode (Option 10), the value of the position direct reference P767 [Psn Direct Ref] appears on this parameter. When the Spd/Torq/Pos mode P313 [Actv SpTqPs Mode] is the position point-to-point mode (Option 7) or the speed/position profiler mode (Option 6), the position point-to-point reference P776 [PTP Reference] appears on this parameter.	Default: Min/Max:	0 –2147483648 / 2147483647	RO	32-bit Integer
		723	**Psn Command** Position Command Indicates final accumulated command to the position regulator. When the position regulator is not active, this parameter is initialized to P836 [Psn Actual].	Default: Min/Max:	0 –2147483648 / 2147483647	RO	32-bit Integer
		724	**Psn Reg Status** Position Regulator Status Indicates status of position control logic.			RO	32-bit Integer

Options	Reserved	Reserved	Reserved	Reserved	Reserved	Reserved	Reserved	Reserved	Reserved	Reserved	Reserved	Reserved	Reserved	Reserved	Reserved	Reserved	Reserved	Reserved	Reserved	Reserved	InPsn Detect	PsnW2Detect (1)	PsnW1Detect (1)	Intgrtr Hold	Psn Reg Actv	Spd Lmt Hi	Spd Lmt Lo	Integ Lmt Hi	Integ Lmt Lo	Psn Intgrtr	Offset ReRef	OffsetIntgtr
Default	0	0	0	0	0	0	0	0	0	0	0	0	0	0	0	0	0	0	0	0	1	0	0	0	0	0	0	0	0	0	0	0
Bit	31	30	29	28	27	26	25	24	23	22	21	20	19	18	17	16	15	14	13	12	11	10	9	8	7	6	5	4	3	2	1	0

(1) 755 drives only.

0 = False
1 = True

Bit 0 “OffsetIntgtr” – Indicates the position offset Integrator is active with the position offset integrator bit P721 [Position Control] Bit 3 “OffsetVel En” is on.
Bit 1 “Offset ReRef” – Indicates the position offset re-referencing is active with the position offset re-referencing bit P721 [Position Control] Bit 2 “Offset ReRef” is on.
Bit 2 “Psn Intgrtr” – Indicates the position integrator is active with the position integrator bit P721 [Position Control] Bit 1 “Intgrtr En” is on.
Bit 3 “Integ Lmt Lo” – Indicates the position integrator is at the low limit.
Bit 4 “Integ Lmt Hi” – Indicates the position integrator is at the high limit.
Bit 5 “Spd Lmt Lo” – Indicates the position regulator output (speed) is at the low limit.
Bit 6 “Spd Lmt Hi” – Indicates the position regulator output (speed) is at the high limit.
Bit 7 “Psn Reg Actv” – Indicates the position regulator is active
Bit 8 “Intgrtr Hold” – Indicates the position Integrator is held in present state
Bit 9 “PsnW1Detect” – Indicates the position watch 1 has detected motor position equal to its setpoint, from the proper direction.
Bit 10 “PsnW2Detect” – Indicates the position watch 2 has detected motor position equal to its setpoint, from the proper direction.
Bit 11 “InPsn Detect” – Indicates P835 [Psn Error] is within the position band specified by the in-position band P726 [In Pos Psn Band]

		725	**Zero Position** Zero Position Sets the absolute user zero position. When the zero position bit P721 [Position Control] Bit 4 “Zero Psn” is set, P836 [Psn Actual] accumulates the value of P847 [Psn Fdbk] - the P725 [Zero Position], and P836 [Psn Actual] becomes zero when P847 [Psn Fdbk] is at the zero position. The homing function also sets the value after homing process is completed.	Default: Min/Max:	0 –2147483648 / 2147483647	RW	32-bit Integer
		726	**In Pos Psn Band** In Positive Position Bandwidth Sets the overall bandwidth of the in position detector. The detector sets the in-position detect bit P724 [Psn Reg Status] Bit 11 “InPsn Detect” when P835 [Psn Error] is within this position band for a sufficient time specified by the in-position dwell time P727 [In Pos Psn Dwell]. A modest hysteresis count is added to the position bandwidth after the position error is within specified limits.	Default: Min/Max:	200 0 / 2147483647	RW	32-bit Integer

File	Group	No.	Display Name Full Name Description	Values		Read-Write	Data Type
POSITION CONTROL	Position Cfg/Sts	727	**In Pos Psn Dwell** In Positive Position Dwell Sets dwell time for the in position detector. Position error must be within the value specified by the in-position band P726 [In Pos Psn Band] for this amount of time before the in-position detector sets the in-position detect bit P724 [Psn Reg Status] Bit 11 "InPsn Detect." A momentary out-of-position indication will reset the internal timer and clear the in-position detect bit P724 [Psn Reg Status] Bit 11 "InPsn Detect."	Default: Min/Max:	0.0040 0.0001 / 10.0000	RW	Real
		730	**Homing Status** Homing Status Indicates status of position control logic. Options: Reserved, Reserved, Reserved, Reserved, Reserved, Reserved, Reserved, Reserved, Reserved, Reserved, Reserved, Reserved, At Home, Homing, Home Enabled, Home Request Default: 0 0 0 0 0 0 0 0 0 0 0 0 0 0 0 0 Bit: 15 14 13 12 11 10 9 8 7 6 5 4 3 2 1 0 0 = Disabled 1 = Enabled Bit 0 "Home Request" – Indicates the homing function is requested. The homing function is requested by the homing configuration bits in P731 [Homing Control]. This bit turns off when homing is complete. Bit 1 "Home Enabled" – Indicates the homing function is enabled. This bit is set when the homing function is requested and the drive starts. Bit 2 "Homing" – Indicates the drive is heading to home position. This bit is set when the drive is running. Bit 3 "At Home" – Indicates when the difference between P847 [Psn Fdbk] and P737 [Actual Home Psn] is less than P726 [In Pos Psn Band].			RO	16-bit Integer

File	Group	No.	Display Name Full Name Description	Values	Read-Write	Data Type
POSITION CONTROL	Position Homing	**731**	**Homing Control** Homing Control Sets bits to configure the homing function.		RW	16-bit Integer

Options	Reserved	Reserved	Reserved	Reserved	Reserved	Reserved	Reserved	Home Torque	Hold At Home	Home DI Inv	Homing Alarm	Psn Redefine	Return Home	Home Marker	Home DI	Find Home
Default	0	0	0	0	0	0	0	0	0	1	0	0	0	0	0	0
Bit	15	14	13	12	11	10	9	8	7	6	5	4	3	2	1	0

0 = Disabled
1 = Enabled

Important: To enable the homing control, Bit 1 or Bit 2 (configuration bits) must be set to go into the Find Home mode. With the drive stopped, verify that a stop command has not been issued and toggle Bit 0 to 1. The drive will go to the home position at the ensuing startup.

Bit 0 "Find Home" – Puts the drive in the homing mode. Setting this bit requests the homing function and sets homing request bit P730 [Homing Status] Bit 0 "Home Request." Toggle this bit with the drive stopped to reset the homing function. If the drive is issued a stop command while in Find Home mode, and before the At Home limit switch is reached, toggle this bit to put the drive back in Find Home mode. Once the At Home limit switch is hit, whether it is wired to the encoder option or a digital input, the drive will revert to mode selected by P313 [Actv SpTqPs Mode]. Movement may result.

Bit 1 "Home DI" – Configures the homing function to use a switch (digital input). When this bit is on and Bit 2 "Home Marker" is off, the homing function is configured as home switch mode. When this bit is on and Bit 2 "Home Marker" is on, the homing function is configured as home marker-switch mode.

Bit 2 "Home Marker" – Configures the homing function to use a marker input. When this bit is on and Bit 1 "Home DI" is off, the homing function is configured as home marker mode. When this bit is on and Bit 1 "Home DI" is on, the homing function is configured as home marker-switch mode. When using this function verify that the Z Channel of the encoder module is enabled (Bit 0 "Z Chan Enbl" = 1).

Bit 3 "Return Home" – Configures the homing function as return to home through software. The drive returns to the actual home position set by P737 [Actual Home Psn]. A start command is required to set this bit.

Same as other homing mode, the drive will resume normal operation after the return home procedure.

Bit 4 "Psn Redefine" – Sets the position feedback P847 [Psn Fdbk] to the actual home position P737 [Actual Home Psn].

Bit 5 "Homing Alarm" – Enables the home running alarm when the homing function is active.

Bit 6 "Home DI Inv" – Changes polarity of the switch input (digital input).

Bit 7 "Hold At Home" – Configures the drive to hold the home position after completing the homing function. A new start command is required for the drive to resume normal operation.

Bit 8 "Home Torque" – Configures the homing function to return home based on a hard stop detection. The drive returns to the home position set by P739 [Home Trq Thresh] and P740 [Home Trq Time].

		732	**DI Find Home** Digital Input Find Home Sets a digital input port for the "Find Home" function. After P731 [Homing Control] Bit 0 "Find Home" is set, a start command is required.	Default: Min/Max:	0.00 0.00 / 159999.15	RW	32-bit Integer
		733	**DI Redefine Psn** Digital Input Redefine Position Sets a digital input port for the redefine position function. The digital input assigned by this parameter is equivalent to P731 [Homing Control] Bit 4 "Psn Redefine."	Units: Min/Max:	0.00 0.00 / 159999.15	RW	32-bit Integer
		734	**DI OL Home Limit** Digital Input Open Loop Home Limit Sets a digital input port for the limit switch of open loop homing function. Polarity of digital input (rising or falling edge) is specified by P731 [Homing Control] Bit 6 "Home DI Inv."	Units: Min/Max:	0.00 0.00 / 159999.15	RW	32-bit Integer
		735	**Find Home Speed** Find Home Speed Sets the speed and direction that are active when P731 [Homing Control] Bit 0 "Find Home" is active. The sign of the value defines direction ("+" = Forward, "–" = Reverse). If set to a negative value, verify that parameter 308 [Direction Mode] is set to 1 "Bipolar."	Units: Default: Min/Max:	Hz RPM P27 [Motor NP Hz] x 0.1 P28 [Motor NP RPM] x 0.1 P27 [Motor NP Hz] x 0.5 P28 [Motor NP RPM] x 0.5	RW	Real
		736	**Find Home Ramp** Find Home Ramp Sets the rate of acceleration and deceleration of the Find Home moves.	Units: Default: Min/Max:	Secs 10.00 0.01 / 6554.00	RW	Real

File	Group	No.	Display Name Full Name Description	Values		Read-Write	Data Type
POSITION CONTROL	Position Homing	**737**	**Actual Home Psn** Actual Home Position Indicates actual home position after the homing function is complete. The value in this parameter displays the raw position feedback data at home position.	Default: Min/Max:	0 –2147483648 / 2147483647	RW	32-bit Integer
		738	**User Home Psn** User Home Position Sets user-defined home position. After the homing function is completed, the following parameters are updated with this parameter value; P723 [Psn Command], P815 [Psn Ref EGR Out], P836 [Psn Actual], P837 [Psn Load Actual].	Default: Min/Max:	0 –2147483648 / 2147483647	RW	32-bit Integer
		739	**Home Trq Thresh** Home Torque Threshold Sets the minimum torque level needed to detect the hard stop during a Home to Torque sequence. The drive's output torque must exceed the specified Home Torque Threshold for the specified Home Torque Time. The units for Home Torque Threshold are expressed as a percentage of the operative Torque Limit, which during the homing sequence is set to the Home Torque Limit of the controller.	Units: Default: Min/Max:	% 15.00 0.00 / 100.00	RW	Real
		740	**Home Trq Time** Home Torque Time Sets the minimum amount of time needed for the drive's output torque to exceed the specified Home Torque Threshold to detect the hard stop during a Home to Torque sequence. Zero will disable the home to torque sequence.	Units: Default: Min/Max:	Secs 1.0 0.0 / 10.0	RW	Real
		741	**Home Trq Level** Home Torque Level The Home Torque Level attribute contains the value of the torque limit when using one of the torque homing modes. The units for the Torque Level will be "% continuous torque" of the motor limited by the drive-rated current/motor-rated current ratio.	Units Default: Min/Max:	% 20 0.00 / 100	RW	Real
		742	**Home Torq Offset** Home Torque Offset Determines the distance between the homing event position and the home position. Not valid for "immediate" Home Sequence.	Default: Min/Max:	0 -214783648 / 214783648	RW	Real
		743	**Home Return Spd** Home Return Speed Final speed of an active homing sequence either returning to the home switch or home position. Return direction is always opposite of Home Spd.	Units Default: Min/Max:	Hz or RPM P27 [Motor NP Hz] / 100 +P27 [Motor NP Hz] * 0.5 / 0.0	RW	Real
		744	**Home Decel** Home Deceleration Deceleration of an active homing sequence.	Units Default: Min/Max:	secs 10.0 0.01 / 6554.00	RW	Real

File	Group	No.	Display Name Full Name Description	Values		Read-Write	Data Type
POSITION CONTROL	Position Watch	745 748	755 **PsnWatch1 Select** 755 **PsnWatch2 Select** Position Watch *n* Select Selects a position feedback source that is compared to the position watch detect-input P746 [PsnWatch1 DtctIn], P749 [PsnWatch2 DtctIn].	Default: Min/Max:	847 1 / 159999	RW	32-bit Integer
		746 749	755 **PsnWatch1 DtctIn** 755 **PsnWatch2 DtctIn** Position Watch *n* Detect Input Provides position feedback source for the position watch function. The position watch function is enabled and configured by the position control configuration P721 [Position Control]. The position watch function compares this value to the position watch set point P747 [PsnWatch1 Stpt], P750 [PsnWatch2 Stpt] when this parameter P746, P749 is selected by the position watch select P745 [PsnWatch1 Select], P748 [PsnWatch2 Select]. The position detect bit P724 [Psn Reg Status] Bit 9 "PsnW1Detect", Bit 10 "PsnW2Detect" is set when the appropriate condition is satisfied.	Default: Min/Max:	0 –2147483648 / 2147483647	RW	32-bit Integer
		747 750	755 **PsnWatch1 Stpt** 755 **PsnWatch2 Stpt** Position Watch *n* Setpoint Provides set point for the position watch function. The position watch function is enabled and configured by P721 [Position Control]. The position watch function compares this value to the position feedback source selected by the position watch select P745 [PsnWatch1 Select], P748 [PsnWatch2 Select]. The position detect bit P724 [Psn Reg Status] Bit 9 "PsnW1Detect", Bit 10 "PsnW2Detect" is set when the appropriate condition is satisfied.	Default: Min/Max:	0 –2147483648 / 2147483647	RW	32-bit Integer

File	Group	No.	Display Name Full Name Description	Values		Read-Write	Data Type
POSITION CONTROL	Interpolator	755	755 **Interp Control** Interpolator Control Reserved for future use.	Default: Options:	0 1 / 2147483647	RW	32-bit Integer
		756	755 **Interp Psn Input** Interpolator Position Input Input value to the Command Position fine interpolator.	Default: Min/Max:	0 –2147483648 / 2147483647	RW	32-bit Integer
		757	755 **Interp Vel Input** Interpolator Velocity Input Input value to the Command Velocity fine interpolator.	Units: Default: Min/Max:	Hz RPM 0.00 –/+1000000.00	RW	Real
		758	755 **Interp Trq Input** Interpolator Torque Input Input value to the Command Torque fine interpolator.	Default: Min/Max:	0.00 –/+1000000.00	RW	Real
		759	755 **Interp Psn Out** Interpolator Position Output Output value from the Command Position fine interpolator.	Default: Min/Max:	0 –2147483648 / 2147483647	RO	32-bit Integer
		760	755 **Interp Vel Out** Interpolator Velocity Output Output value from the Command Velocity fine interpolator. When no Command Velocity signal is present when performing position control, this signal can be derived by scaling the Differential Position output value of the Command Position fine interpolator.	Units: Default: Min/Max:	Hz RPM 0.00 –/+1000000.00	RO	Real
		761	755 **Interp Trq Out** Interpolator Torque Output Command torque output from fine interpolator (if active) into torque input summing junction when configured for toque control.	Default: Min/Max:	0.00 –/+1000000.00	RO	Real

File	Group	No.	Display Name Full Name Description	Values		Read-Write	Data Type
POSITION CONTROL	Direct	**765**	**Psn Ref Select** Position Reference Select Selects a position reference to the position regulator when P313 [Actv SpTqPs Mode] is set to 10 "Psn Direct."	Default: Options:	766 1 / 159999	RW	32-bit Integer
		766	**Psn Direct Stpt** Position Direct Setpoint Provides a set point for the direct position reference and a position reference to the position regulator when P313 [Actv SpTqPs Mode] is set to 10 "Psn Direct" and P765 [Psn Ref Select] is set to this parameter.	Default: Min/Max:	0 –2147483648 / 2147483647	RW	32-bit Integer
		767	**Psn Direct Ref** Position Direct Reference Indicates the position direct reference selected by P765 [Psn Ref Select].	Default: Min/Max:	0 –2147483648 / 2147483647	RO	32-bit Integer

File	Group	No.	Display Name Full Name Description	Values	Read-Write	Data Type
POSITION CONTROL	Point to Point	770	**PTP Control** Point-To-Point Control Sets bits to configure the point-to-point position control.		RW	16-bit Integer

Options	Reserved	Reserved	Reserved	Reserved	Reserved	Reserved	Reserved	Reserved	Reserved	Ref Sync	Ref Pause	Intgrtr Hold	Preset Psn	Reverse Move	Move	Vel Override
Default	0	0	0	0	0	0	0	0	0	0	0	0	0	0	0	0
Bit	15	14	13	12	11	10	9	8	7	6	5	4	3	2	1	0

0 = False
1 = True

Bit 0 "Vel Override" – Applies the velocity override P788 [PTP Vel Override] to the forward velocity limit P785 [PTP Fwd Vel Lmt] and the reverse velocity limit P786 [PTP Rev Vel Lmt] as a gain. When the velocity override P788 [PTP Vel Override] is 1.1 and the forward velocity limit P785 [PTP Fwd Vel Lmt] is 30 Hz, the bit sets the maximum forward velocity to 33 Hz.

Bit 1 "Move" – Sets scaled point-to-point position reference to the point-to-point position command P784 [PTP Command]. When the point-to-point mode selection P771 [PTP Mode] is absolute mode (Option 0), the absolute position is set to the point-to-point position command P784 when the bit rises. When the point-to-point mode selection P771 [PTP Mode] is index mode (Option 1), the index position is set to the point-to-point position command P784 when the bit rises.

Bit 2 "Reverse Move" – Changes direction of the index position when the point-to-point mode selection P771 [PTP Mode] is index mode (Option 1). Set the direction with this bit, then set Bit 1 "Move" to 1 to move.

Bit 3 "Preset Psn" – Sets index preset P779 [PTP Index Preset] to the point-to-point position command P784 [PTP Command] when the point-to-point mode selection P771 [PTP Mode] is index mode (Option 1).

Bit 4 "Intgrtr Hold" – Holds integrator in the velocity control.

Bit 5 "Ref Pause" – Pauses functioning of the point-to-point control. The point-to-point speed forward reference becomes zero, and the position selected reference P722 [Psn Selected Ref] keeps current position.

Bit 6 "Ref Sync" – Sets initial value to the point-to-point feedback P777 [PTP Feedback]. When motor feedback reaches zero speed, P776 [PTP Reference] and P777 [PTP Feedback] are reset to P836 [Psn Actual].

		771	**PTP Mode** Point-To-Point Mode Selects point-to-point position mode. The point-to-point position control is configured with the following selections. "Absolute" (0) – Selects absolute position mode. When P770 [PTP Control] Bit 1 "Move" is set, the reference source, selected by P775 [PTP Ref Sel], is multiplied by P778 [PTP Ref Scale] and P784 [PTP Command] is set by the result. "Index" (1) – Selects index position mode. When P770 [PTP Control] Bit 1 "Move" is set, the reference source, selected by P775 [PTP Ref Sel], is multiplied by P778 [PTP Ref Scale] and P784 [PTP Command] is incremented by the result. "Immediate" (2) – Selects absolute immediate position mode. When P770 [PTP Control] Bit 1 "Move" is set, and the reference source selected by P775 [PTP Ref Sel] changes, P784 [PTP Command] is immediately set.	Default: Options:	0 = "Absolute" 0 = "Absolute" 1 = "Index" 2 = "Immediate"	RW	32-bit Integer
		772	**DI Indx Step** Digital Input Index Step Sets a digital input port for the index position move. The digital input assigned by this parameter is equivalent to the point-to-point move bit P770 [PTP Control] Bit 1 "Move" when the point-to-point mode P771 [PTP Mode] is set to 0 "Absolute" or 1 "Index."	Default: Min/Max:	0.00 0.00 / 159999.15	RW	32-bit Integer
		773	**DI Indx StepRev** Digital Input Index Step Reverse Sets a digital input port for the index position reverse move. The digital input assigned by this parameter is equivalent to the point-to-point reverse move bit P770 [PTP Control] Bit 2 "Reverse Move" when the point-to-point mode P771 [PTP Mode] is selected to the index position mode (Option 1).	Default: Min/Max:	0.00 0.00 / 159999.15	RW	32-bit Integer
		774	**DI Indx StepPrst** Digital Input Index Step Preset Sets a digital input port for the index preset position. The digital input assigned by this parameter is equivalent to the point-to-point preset position bit P770 [PTP Control] Bit 3 "Preset Psn" when the point-to-point mode P771 [PTP Mode] is selected to the index position mode (Option 1).	Default: Min/Max:	0.00 0.00 / 159999.15	RW	32-bit Integer

File	Group	No.	Display Name Full Name Description	Values		Read-Write	Data Type
POSITION CONTROL	Point to Point	775	**PTP Ref Sel** Point-To-Point Reference Select Selects a point-to-point reference source that applies to the point-to-point position control.	Default: Min/Max:	780 1 / 159999	RW	32-bit Integer
		776	**PTP Reference** Point-To-Point Reference Indicates output of the point-to-point position control as a reference of the position control. When the speed/torque/position mode P313 [Actv SpTqPs Mode] is selected to the point-to-point mode (Option 7) or the profiler mode (Option 6), this parameter value appears on the position selected reference P722 [Psn Selected Ref].	Default: Min/Max:	0 –2147483648 / 2147483647	RO	32-bit Integer
		777	**PTP Feedback** Point-To-Point Feedback Indicates position feedback in the point-to-point position control.	Default: Min/Max:	0 –2147483648 / 2147483647	RO	32-bit Integer
		778	**PTP Ref Scale** Point-To-Point Reference Scale Provides count per scale value for the point-to-point position reference. The value is a multiplier for the point-to-point reference source selected by the reference selection P775 [PTP Ref Sel].	Default: Min/Max:	1.00 –/+220000000.00	RW	Real
		779	**PTP Index Preset** Point-To-Point Index Preset Provides pre-set index value. The value sets to the point-to-point position command P784 [PTP Command] when the point-to-point mode is index mode P771 [PTP Mode] and the preset position bit P770 [PTP Control] Bit 3 "Preset Psn" is on.	Default: Min/Max:	0 –2147483648 / 2147483647	RW	32-bit Integer
		780	**PTP Setpoint** Point-To-Point Setpoint Provides set point for the point-to-point position control. The value applies to the point-to-point control when the point-to-point reference selection P775 [PTP Ref Sel] is P780.When P771 [PTP Mode] is set to 1 "Index," the value of this parameter represents the amount of index.	Default: Min/Max:	0 –2147483648 / 2147483647	RW	32-bit Integer
		781	**PTP Accel Time** Point-To-Point Acceleration Time Provides the ramp time for acceleration (time to go from zero to speed limit). The speed limit is set by P785 [PTP Fwd Vel Lmt] and P786 [PTP Rev Vel Lmt].	Units: Default: Min/Max:	Secs 10.00 0.00 / 3600.00	RW	Real
		782	**PTP Decel Time** Point-To-Point Deceleration Time Provides the ramp time for deceleration (time to go from speed limit to zero). The speed limit is set by P785 [PTP Fwd Vel Lmt] and P786 [PTP Rev Vel Lmt].	Units: Default: Min/Max:	Secs 10.00 0.00 / 3600.00	RW	Real
		783	**PTP Speed FwdRef** Point-To-Point Speed Forward Reference Indicates speed reference output from the point-to-point position control. Typically this parameter is used by the drive speed loop.	Units: Default: Min/Max:	Hz RPM 0.00 –/+P27 [Motor NP Hertz] x 8 –/+P28 [Motor NP RPM] x 8	RO	Real
		784	**PTP Command** Point-To-Point Command Indicates position command for the point-to-point position control. The source of the position command is selected by the speed/torque/position mode P313 [Actv SpTqPs Mode].	Default: Min/Max:	0 –2147483648 / 2147483647	RO	32-bit Integer
		785	**PTP Fwd Vel Lmt** Point-To-Point Forward Velocity Limit Provides the maximum forward speed reference limit from the PTP regulator.	Units: Default: Min/Max:	Hz RPM P27 [Motor NP Hertz] x 0.5 P28 [Motor NP RPM] x 0.5 0.00/P27 [Motor NP Hertz] 0.00/P28 [Motor NP RPM] x 8	RW	Real

File	Group	No.	Display Name Full Name Description	Values		Read-Write	Data Type
POSITION CONTROL	Point to Point	**786**	**PTP Rev Vel Lmt** Point-To-Point Reverse Velocity Limit Provides the maximum reverse speed reference limit from the PTP regulator.	Units Default: Min/Max:	Hz RPM P27 [Motor NP Hertz] x 0.5 P28 [Motor NP RPM] x 0.5 - P27 [Motor NP Hertz] P28 [Motor NP RPM] x 8 / 0.00	RW	Real
		787	**PTP S Curve** Point-To-Point S Curve Provides the amount of time that is applied to the S Curve from the PTP regulator.	Units: Default: Min/Max:	Secs 0.500 0.000 / 4.000	RW	Real
		788	**PTP Vel Override** Point-To-Point Velocity Override Provides multiplier to both forward P785 [PTP Fwd Vel Lmt] and reverse P786 [PTP Rev Vel Lmt] speed limits. This parameter applies to the speed limits when the override bit P770 [PTP Control] Bit 0 "Vel Override" is on.	Default: Min/Max:	1.00 0.20 / 1.50	RW	Real
		789	**PTP EGR Mult** Point-To-Point Electronic Gear Ratio Multiply EGR multiplier (numerator) for position index output. The output applies to the point-to-point command P784 [PTP Command].	Default: Min/Max:	1 –/+2000000	RW	32-bit Integer
		790	**PTP EGR Div** Point-To-Point Electronic Gear Ratio Divide EGR divider (denominator) for position index output. The output applies to the point-to-point command P784 [PTP Command].	Default: Min/Max:	1 1 / 2000000	RW	32-bit Integer

File	Group	No.	Display Name Full Name Description	Values	Read-Write	Data Type
POSITION CONTROL	Phase Lock Loop	**795**	755 **PLL Control** Phase Locked Loop Control Sets bits to configure the phase locked loop control.		RW	16-bit Integer

Options	Reserved	Reserved	Reserved	Reserved	Reserved	Reserved	Reserved	Reserved	Reserved	Prof Enable	PTP Enable	PCAM Enable	Accel Comp	Ext Vel FF	Velocity FF	PLL Enable
Default	0	0	0	0	0	0	0	0	0	0	0	0	0	0	0	0
Bit	15	14	13	12	11	10	9	8	7	6	5	4	3	2	1	0

0 = False
1 = True

Bit 0 "PLL Enable" – enables the phase locked loop control.
Bit 1 "Velocity FF" – enables the velocity feed forward path.
Bit 2 "Ext Vel FF" – enables the external velocity feed forward through the PLL external speed reference selected by the PLL external speed selection P796 [PLL Ext Spd Sel].
Bit 3 "Accel Comp" – enables providing an element of acceleration compensation to the feed forward branch. This is not recommended for use with external inputs because of increased noise.
Bit 4 "PCAM Enable" – enables PCAM function with the PLL function.
Bit 5 "PTP Enable" – enables point-to-point function with the PLL function.
Bit 6 "Prof Enable" – enables profiler function with the PLL function.
Only bits 4, 5, and 6 allow associating with the PLL function.

		796	755 **PLL Ext Spd Sel** Phase Locked Loop External Speed Select Selects an external speed reference source.	Default: Options:	797 1 / 159999	RW	32-bit Integer

File	Group	No.	Display Name Full Name Description	Values		Read-Write	Data Type
POSITION CONTROL	Phase Lock Loop	797	755 **PLL Ext Spd Stpt** Phase Locked Loop External Speed Setpoint Provides external speed reference. This parameter is a velocity feed forward input that is selected by the external speed select P796 [PLL Ext Spd Sel].	Default: Min/Max:	0.00 –/+220000000.00	RW	Real
		798	755 **PLL Ext SpdScale** Phase Locked Loop External Speed Scale Sets scale factor to the external speed reference selected by the external speed select P796 [PLL Ext Spd Sel]. This parameter is used to properly scale the velocity feed forward. Adjust for zero average at the filtered position output P806 [PLL Psn Out Fltr] while running at moderate speed.	Default: Min/Max:	1.00 –/+220000000.00	RW	Real
		799	755 **PLL Psn Ref Sel** Phase Locked Loop Position Reference Select Selects a position reference source.	Default: Min/Max:	800 1 / 159999	RW	32-bit Integer
		800	755 **PLL Psn Stpt** Phase Locked Loop Position Setpoint Provides position reference when the position reference select P799 [PLL Psn Ref Sel] selects this parameter.	Default: Min/Max:	0 –2147483648 / 2147483647	RW	32-bit Integer
		801	755 **PLL BW** Phase Locked Loop Bandwidth Sets internal bandwidth of the PLL function response. The setting for very noisy mechanical systems could range from 1 to 10 (r/s) while well-behaved high line count input devices could range upwards of 100 (r/s). Higher bandwidths will quickly resolve tracking errors while the lower bandwidths will take longer to settle into a steady state. Some adjustment will be necessary for the best compromise between noise and tracking response.	Units: Default: Min/Max:	R/S 20.00 0.00 / 8000.00	RW	Real
		802	755 **PLL LPFilter BW** Phase Locked Loop Low Pass Filter Bandwidth Sets low pass filter bandwidth. The filter has two functions: • Basic noise reduction of input velocity. • Timed delay of input when feed forward is provided to an external master reference other than an input encoder. The filter low pass bandwidth should be set for best tracking which occurs when the filter output coincides with the loop filter output of PLL. Usually that means setting its bandwidth to the bandwidth of the master reference drive.	Units: Default: Min/Max:	R/S 50.00 0.00 / 8000.00	RW	Real
		803	755 **PLL Virt Enc RPM** Phase Locked Loop Virtual Encoder Revolutions Per Minute Sets RPM of the virtual output device. The value determines the 1 P.U. velocity for the speed out P807 [PLL Speed Out] and does not affect performance.	Units: Default: Min/Max:	RPM 1750.00 1.00 / 40000.00	RW	Real
		804	755 **PLL EPR Input** Phase Locked Loop Edges Per Revolution Input Sets edges per revolution of the physical input device. Using the highest line count device possible smooths PLL operation.	Default: Min/Max:	1048576 1 / 67108864	RW	32-bit Integer
		805	755 **PLL Rvls Input** Phase Locked Loop Revolutions Input Sets revolution of the input encoder. This parameter must be coordinated with the revolution of the output encoder P812 [PLL Rvls Output] to resolve the gear-ratio between input revolutions and output (virtual) revolutions. The ratio of input to output revolutions can always be resolved into integer values and should be reduced to their lowest common factor.	Default: Min/Max:	1 1 / 1000000	RW	32-bit Integer

File	Group	No.	Display Name Full Name Description	Values		Read-Write	Data Type
POSITION CONTROL	Phase Lock Loop	806	755 **PLL Psn Out Fltr** Phase Locked Loop Position Output Filter Indicates internal low pass filter output. This parameter is normally used to properly scale an external velocity reference. See description of the external speed scale P798 [PLL Ext SpdScale].	Default: Min/Max:	0.00 –/+220000000.00	RO	Real
		807	755 **PLL Speed Out** Phase Locked Loop Speed Output Indicates velocity output. This parameter is used as a velocity feed forward. It is precisely in phase with the physical input device. The virtual encoder RPM P803 [PLL Virt Enc RPM] determines the RPM at 1 P.U. of this parameter.	Default: Min/Max:	0.00 –/+220000000.00	RO	Real
		808	755 **PLL Speed OutAdv** Phase Locked Loop Speed Output Advanced Indicates velocity advanced output. This parameter is one velocity reference sample in advance of the speed output P807 [PLL Speed Out].	Default: Min/Max:	0.00 –/+220000000.00	RO	Real
		809	755 **PLL Enc Out** Phase Locked Loop Encoder Output Indicates position output. This parameter is precisely in phase with the input physical device.	Default: Min/Max:	0 –2147483648 / 2147483647	RO	32-bit Integer
		810	755 **PLL Enc Out Adv** Phase Locked Loop Encoder Output Advanced Indicates position advanced output. This parameter is one position sample in advance of the position output P809 [PLL Enc Out].	Default: Min/Max:	0 –2147483648 / 2147483647	RO	32-bit Integer
		811	755 **PLL EPR Output** Phase Locked Loop Edges Per Revolution Output Sets edges per revolution of the physical output device.	Default: Min/Max:	1048576 1 / 67108864	RW	32-bit Integer
		812	755 **PLL Rvls Output** Phase Locked Loop Revolutions Output Sets revolution of the output encoder. This parameter must be coordinated with the revolution of the input encoder P805 [PLL Rvls Input] to resolve the gear-ratio between input revolutions and output (virtual) revolutions. The ratio of input to output revolutions can always be resolved into integer values and should be reduced to their lowest common factor.	Default: Min/Max:	1 1 / 2000000	RW	32-bit Integer

File	Group	No.	Display Name Full Name Description	Values		Read-Write	Data Type
POSITION CONTROL	Electronic Gear	815	**Psn Ref EGR Out** Position Reference Electronic Gear Ratio Output Indicates accumulated output of the position reference electronic gear ratio (EGR) function. When the position regulator is not enabled, this parameter is initialized to P836 [Psn Actual].	Default: Min/Max:	0 –2147483648 / 2147483647	RO	32-bit Integer
		816	**Psn EGR Mult** Position Electronic Gear Ratio Multiplier Sets integer value in the numerator of the EGR function that is precision multiplied by the position reference. A negative value will effect a change in polarity.	Default: Min/Max:	1 –/+2000000	RW	32-bit Integer
		817	**Psn EGR Div** Position Electronic Gear Ratio Division Sets integer value in the denominator of the EGR function that divides into the product of the numerator and the position reference. Remainders are accumulated and not lost.	Default: Min/Max:	1 1 / 2000000	RW	32-bit Integer

File	Group	No.	Display Name Full Name Description	Values		Read-Write	Data Type
POSITION CONTROL	Position Offset	820	**Psn Offset 1 Sel** Position Offset 1 Select Selects a Position Offset 1 source.	Default: Min/Max:	821 1 / 159999	RW	32-bit Integer
		821	**Psn Offset 1** Position Offset 1 Provides position reference offset, which is summed after the EGR and used to trim the phase of the position reference. A step in the offset position will be internally rate limited and added to the reference position. The rate of correction is set by the offset velocity P824 [Psn Offset Vel]. The initial value of this parameter is latched upon position enable without causing a change in reference. Subsequent changes to this value will be relative to the latched value. See the offset re-referencing bit P721 [Position Control] Bit 2 "Offset ReRef."	Default: Min/Max:	0 –2147483648 / 2147483647	RW	32-bit Integer
		822	**Psn Offset 2 Sel** Position Offset 2 Select Selects a Position Offset 2 source.	Default: Min/Max:	823 1 / 159999	RW	32-bit Integer
		823	**Psn Offset 2** Position Offset 2 Select Provides another position reference offset, which is summed with P821 [Psn Offset 1] and used to trim the phase of the position reference. The rate of correction is set by the offset velocity P824 [Psn Offset Vel].	Default: Min/Max:	0 –2147483648 / 2147483647	RW	32-bit Integer
		824	**Psn Offset Vel** Position Offset Velocity Sets speed of position offset. A position offset command will not exceed this speed. The actual speed of offset is limited to a maximum value of 1/(inertia x pos gain) so as not to cause a torque pulse greater than 1 per unit. The speed will change exponentially.	Units: Default: Min/Max:	Hz RPM P27 [Motor NP Hertz] x 0.005 P28 [Motor NP RPM] x 0.005 –/+P27 [Motor NP Hertz] –/+P28 [Motor NP RPM] x 8	RW	Real

File	Group	No.	Display Name Full Name Description	Values		Read-Write	Data Type
POSITION CONTROL	Ld Psn Fdbk Scal	825	755 **LdPsn Fdbk Mult** Load Position Feedback Multiplier Sets numerator of the load EGR function. It is multiplied by the position load feedback selected by the load feedback select P136 [Load Psn FdbkSel] and divided by the load feedback divider P826 [LdPsn Fdbk Div] to reflect the load pulse count to the motor (effectively removing the gear box ratio). The accumulated position values P836 [Psn Actual] and the position load actual P837 [Psn Load Actual] - will be equal if the ratio is set properly. There may be some difference due to lost motion in the gear train, but there should not be an accumulated difference. It is often necessary to count gear teeth as gear box manufacturers often approximate exact ratios with decimal numbers. Enter a negative value in the numerator to account for reversed motor rotation.	Default: Min/Max:	1 –/+1000000	RW	32-bit Integer
		826	755 **LdPsn Fdbk Div** Load Position Feedback Division Sets denominator of the load EGR function.	Default: Min/Max:	1 1 / 2000000	RW	32-bit Integer

File	Group	No.	Display Name Full Name Description	Values		Read-Write	Data Type
POSITION CONTROL	Position Reg	**830**	**PsnNtchFltrFreq** Position Notch Filter Frequency Sets the center frequency of the position notch filter.	Units: Default: Min/Max:	Hz 0.00 0.00 / 500.00	RW	Real
		831	**PsnNtchFltrDepth** Position Notch Filter Depth Sets the depth for the position notch filter. Attenuation is the ratio of the output to the input at the notch frequency P830 [PsnNtchFltrFreq]. The attenuation of 30 means that the notch output is 1/30th of the input at the specified frequency. Calculation: Attenuation = Input / Output	Default: Min/Max:	50.00 0.00 / 500.00	RW	Real
		832	**Psn Out Fltr Sel** Position Output Filter Select Selects a type of lead-lag filter for position regulator speed output. This parameter sets filter gain P833 [Psn Out FltrGain] and bandwidth P834 [Psn Out Fltr BW] according to the selected type. "Off" (0) – P833 = 1.000, P834 = 0.00 "Custom" (1) – P833 = user setting, P834 = user setting	Default: Options:	0 = "Off" 0 = "Off" 1 = "Custom"	RW	32-bit Integer
		833	**Psn Out FltrGain** Position Output Filter Gain Sets lead-lag filter gain. A default value is sets when the filter type selection P832 [Psn Out Fltr Sel] is not Custom (Option 1). See the filter type selection P832.	Default: Min/Max:	3.000 –/+5.000	RW	Real
		834	**Psn Out Fltr BW** Position Output Filter Bandwidth Sets lead-lag bandwidth. A default value is sets when the filter type selection P832 [Psn Out Fltr Sel] is not Custom (Option 1). See the filter type selection P832.	Units: Default: Min/Max:	R/S 50.00 0.00 / 500.00	RW	Real
		835	**Psn Error** Position Error Indicates actual position error in motor pulse counts as a 32-bit integer. When the position regulator is not enabled, the value is initialized to zero. When the position regulator is enabled, the value contains the running value of position error between the position command P723 [Psn Command] and P836 [Psn Actual].	Default: Min/Max:	0 –2147483648 / 2147483647	RO	32-bit Integer
		836	**Psn Actual** Position Actual Indicates accumulated motor position as a 32-bit integer. It tracks the position feedback P847 [Psn Fdbk]. When P721 [Position Control] Bit 4 "Zero Psn" is set, this parameter accumulates the value of P847 [Psn Fdbk] - the P725 [Zero Position]. When P721 [Position Control] Bit 4 "Zero Psn" is off, this parameter accumulates the value of P847 [Psn Fdbk].	Default: Min/Max:	0 –2147483648 / 2147483647	RO	32-bit Integer

File	Group	No.	Display Name Full Name Description	Values		Read-Write	Data Type
POSITION CONTROL	Position Reg	837	755 **Psn Load Actual** Position Load Actual Indicates accumulated output of the load gear ratio as a 32-bit integer and forms the primary feedback for the position regulator integral channel. It is very important that the load gear ratio be precisely set such that the delta pulse count of one motor revolution equals the delta pulse count of this parameter.	Default: Min/Max:	0 –2147483648 / 2147483647	RO	32-bit Integer
		838	**Psn Reg Ki** Position Regulator Ki Sets position regulator integral gain as measured from position error to velocity reference. The value has gain units of (P.U. velocity/second) / (P.U. position) and is unit compatible with the position regulator proportional gain P839 [Psn Reg Kp]. An integral gain of 25 means that a per unit position error of 0.1 seconds will effect a 2.5 P.U. speed change per second.	Default: Min/Max:	4.00 0.00 / 25000.00	RW	Real
		839	**Psn Reg Kp** Position Regulator Kp Sets position regulator gain as measured from position error to speed reference. The gain number is identically equal to position regulator bandwidth in radians/second. For example: A gain of 10 means that a P.U. position error of 0.1 seconds will effect a 1.0 P.U. speed change (1 per unit position error is the distance traveled in 1 second at base motor speed). The typical value of this parameter is typically 1/3 of the speed bandwidth (radians/second) but may be set considerably higher with careful tuning of the speed regulator output lead/lag filter.	Units: Default: Min/Max:	R/S 4.00 0.00 / 2000.00	RW	Real
		840	**PReg Pos Int Lmt** Position Regulation Positive Integral Limit Sets positive limit of the position regulator integral output. A value of 100% is equal to parameter 28 [Motor NP RPM].	Units: Default: Min/Max:	% 100.00 0.00 / 800.00	RW	Real
		841	**PReg Neg Int Lmt** Position Regulation Negative Integral Limit Sets negative limit of the position regulator integral output. A value of 100% is equal to parameter 28 [Motor NP RPM].	Units: Default: Min/Max:	% –100.00 –800.00 / 0.00	RW	Real
		842	**PsnReg IntgrlOut** Position Regulation Integral Output Indicates output of the position regulator integral channel after the limit function.	Units: Default: Min/Max:	Hz RPM 0.00 –/+P27 [Motor NP Hertz] x 8 –/+P28 [Motor NP RPM] x 8	RO	Real
		843	**PsnReg Spd Out** Position Regulation Speed Output Indicates final output of the position regulator.	Units: Default: Min/Max:	Hz RPM 0.00 –/+P27 [Motor NP Hertz] x 8 –/+P28 [Motor NP RPM] x 8	RO	Real
		844	**PReg Pos Spd Lmt** Position Regulation Positive Speed Limit Sets positive speed limit of total position regulator output. A value of 100% is equal to parameter 28 [Motor NP RPM].	Units: Default: Min/Max:	% 10.00 0.00 / 800.00	RW	Real
		845	**PReg Neg Spd Lmt** Position Regulation Negative Speed Limit Sets negative speed limit of total position regulator output. A value of 100% is equal to parameter 28 [Motor NP RPM].	Units: Default: Min/Max:	% –10.00 –800.00 / 0.00	RW	Real

File	Group	No.	Display Name Full Name Description	Values		Read-Write	Data Type
POSITION CONTROL	Position Reg	**846**	**Psn Reg Droop** Position Regulation Droop Sets position droop which limits the low frequency gain of the position regulators integral channel to a value of (1/droop). This parameter provides a means to fine tune the stability for load mounted feedback devices where lost motion may cause a problem. Typically, the position droop will have a value that is less than (1/position gain), perhaps even zero for tightly coupled loads. The position droop has a gain value of (P.U. position) / (P.U. speed). Note: 1 P.U. position is the distance traveled in 1 second at base motor speed.	Units: Default: Min/Max:	Secs 0.00 0.00 / 25.00	RW	Real
		847	**Psn Fdbk** Position Feedback Indicates the accumulated pulse count of the position feedback selected by the position feedback select P135 [Psn Fdbk Sel].	Default: Min/Max:	0 –2147483648 / 2147483647	RO	32-bit Integer
		848	755 **Psn Gear Ratio** Position Gear Ratio Sets the load side gear ratio for position control. Adjust this parameter's value when the load side encoder is selected for the position feedback by P135 [Mtr Psn Fdk Sel], and the load is coupled to the motor through a gear. Calculation: Gear Ratio = (Number of teeth on Gear or driven) / (Number of teeth on Pinion or driver) When a motor (driver) and a load (driven) are coupled with a 20:1 gear box (the gear ratio = 20), the value of this parameter will be 20. This value affects the following parameters as a speed feed forward gain. P843 [PsnReg Spd Out] P783 [PTP Speed FwdRef] P807 [PLL Speed Out] P1472 [PCAM Vel Out]	Default: Min/Max:	1.0000 0.0001 / 9999.0000	RW	Real

Drive (Port 0) Communication File

File	Group	No.	Display Name Full Name Description	Values		Read-Write	Data Type
COMMUNICATION	Comm Control	**865** **866** **867**	**DPI Pt1 Flt Actn** **DPI Pt2 Flt Actn** **DPI Pt3 Flt Actn** DPI Port *n* Fault Action Sets the response to a HIM communication loss. Note: This feature will not work if the HIM is the only Stop source. "Fault" (0) – Major fault indicated. Coast to Stop. "Stop" (1) – Type 2 alarm indicated. Stop according to P370 [Stop Mode A]. "Zero Data" (2) – Type 2 alarm indicated. If running, drive continues to run, speed reference goes to zero. "Hold Last" (3) – Type 2 alarm indicated. If running, drive continues to run at the last value entered from the HIM. "Send Flt Cfg" (4) – Type 2 alarm indicated. If running, drive continues to run at [DPI Pt*n* Flt Ref].	Default: Options:	0 = "Fault" 0 = "Fault" 1 = "Stop" 2 = "Zero Data" 3 = "Hold Last" 4 = "Send Flt Cfg"	RW	32-bit Integer
		868 **869** **870**	**DPI Pt1 Flt Ref** **DPI Pt2 Flt Ref** **DPI Pt3 Flt Ref** DPI Port *n* Fault Reference Sets a constant value for the speed reference when [DPI Pt*n* Flt Actn] option 4 "Send Flt Cfg" is set and a HIM communication loss is detected.	Default: Min/Max:	0.00 –/+220000000.00	RO	Real

File	Group	No.	Display Name Full Name Description	Values		Read-Write	Data Type
COMMUNICATION	Comm Control	871 872 873 874 875 876 877 878	**Port 1 Reference** **Port 2 Reference** **Port 3 Reference** **Port 4 Reference** **Port 5 Reference** **Port 6 Reference** 755 **Port13 Reference** **Port14 Reference** Port *n* Reference Reference value from port devices.	Units: Default: Min/Max:	Hz RPM 0.00 –/+P27 [Motor NP Hertz] x 8 –/+P28 [Motor NP RPM] x 8	RO	Real
		879	**Drive Logic RsIt** Drive Logic Result This is the logic output of the logic parser that combines the outputs from the DPI ports and the DeviceLogix controller to determine drive control based on the masks and owners. Used for peer to peer communication with PowerFlex 750-Series communication modules.			RO	32-bit Integer
		880	**DPI Ref RsIt** DPI Reference Result Present speed reference scaled as a DPI reference for peer to peer communications. The value shown is the value prior to the accel/decel ramp and the corrections supplied by slip comp, PI, etc. Used for peer to peer communication with 20-COMM communication modules.	Units: Default: Min/Max:	Hz RPM 0.000 –2147483.648 / 2147483.624	RO	32-bit Integer
		881	**DPI Ramp RsIt** DPI Ramp Result Displays the speed reference value, after the limit function. This is the input to the error calculator and speed regulator. Used for peer-to-peer communication with 20-COMM communication modules.	Units: Default: Min/Max:	Hz RPM 0.000 –2147483.648 / 2147483.624	RO	32-bit Integer
		882	**DPI Logic RsIt** DPI Logic Result A version of P879 that is used when doing peer-to-peer control with a 20-COMM communication module. The lower 16 bit command values are copied into the upper 16 bits of this 32-bit parameter for use with this type of communication module. Not for use with a 20-750 communication module.			RO	32-bit Integer
		883	**Drive Ref RsIt** Drive Reference Result Present frequency reference scaled as a DPI reference for peer to peer communications. The value shown is the value prior to the accel/decel ramp and the corrections supplied by slip comp, PI, etc. Used for peer to peer communication with 20-COMM communication modules.	Units: Default: Min/Max:	Hz RPM 0.000 –/+2147483648.000	RO	Real
		884	**Drive Ramp RsIt** Drive Ramp Result Displays the speed reference value, after the limit function. This is the input to the error calculator and speed regulator. This number is scaled so that rated motor speed will read 32768. Used for peer to peer communication with 20-COMM communication modules.	Units: Default: Min/Max:	Hz RPM 0.000 –/+2147483648.000	RO	Real

879 Drive Logic RsIt

Options	Reserved	Reserved	Reserved	Reserved	Reserved	Reserved	Reserved	Reserved	Reserved	Reserved	Reserved	Reserved	Jog 2	Run	Climit Stop	Coast Stop	Emrg OvrRide	SpdRef Sel 2	SpdRef Sel 1	SpdRef Sel 0	Decel Time 2	Decel Time 1	Accel Time 2	Accel Time 1	Reserved	Manual	Reverse	Forward	Clear Faults	Jog 1	Start	Stop
Default	0	0	0	0	0	0	0	0	0	0	0	0	0	0	0	0	0	0	0	0	0	0	0	0	0	0	0	0	0	0	0	0
Bit	31	30	29	28	27	26	25	24	23	22	21	20	19	18	17	16	15	14	13	12	11	10	9	8	7	6	5	4	3	2	1	0

0 = False, 1 = True

882 DPI Logic RsIt

Options	Emrg OvrRide	SpdRef Sel 2	SpdRef Sel 1	SpdRef Sel 0	Decel Time 2	Decel Time 1	Accel Time 2	Accel Time 1	Reserved	Manual	Reverse	Forward	Clear Faults	Jog 1	Start	Stop	Emrg OvrRide	SpdRef Sel 2	SpdRef Sel 1	SpdRef Sel 0	Decel Time 2	Decel Time 1	Accel Time 2	Accel Time 1	Reserved	Manual	Reverse	Forward	Clear Faults	Jog 1	Start	Stop
Default	0	0	0	0	0	0	0	0	0	0	0	0	0	0	0	0	0	0	0	0	0	0	0	0	0	0	0	0	0	0	0	0
Bit	31	30	29	28	27	26	25	24	23	22	21	20	19	18	17	16	15	14	13	12	11	10	9	8	7	6	5	4	3	2	1	0

0 = False, 1 = True

File	Group	No.	Display Name Full Name Description	Values	Read-Write	Data Type
COMMUNICATION	Security	885	**Port Mask Act** Port Mask Active Active status for port communication. Bit 15 "Security" determines if network security is controlling the port mask instead of this parameter. For example, bit 15 can be active (control the port mask) when Automatic Device Configuration (ADC) is active.	0 = Read Only 1 = Read/Write	RO	16-bit Integer
		886	**Logic Mask Act** Logic Mask Active Active status of the logic mask for ports. Bit 15 "Security" determines if network security is controlling the logic mask instead of this parameter.	0 = Read Only 1 = Read/Write	RO	16-bit Integer
		887	**Write Mask Act** Write Mask Active Active status of write access for ports. Bit 15 "Security" determines if network security is controlling the write mask instead of this parameter.	0 = Read Only 1 = Read/Write	RO	16-bit Integer
		888	**Write Mask Cfg** Write Mask Configuration Enables/disables write access (parameters, links, etc.) for DPI ports. Changes to this parameter only become effective when power is cycled, the drive is reset or bit 15 of P887 [Write Mask Act], transitions from "1" to "0."	0 = Read Only 1 = Read/Write	RW	16-bit Integer

885 Port Mask Act

Options	Security	Port 14	Port 13	Reserved	Port 11	Port 10	Port 9	Port 8	Port 7	Port 6	Port 5	Port 4	Port 3	Port 2	Port 1	Digital In
Default	0	0	0	0	0	0	0	0	0	0	0	0	0	0	0	0
Bit	15	14	13	12	11	10	9	8	7	6	5	4	3	2	1	0

886 Logic Mask Act

Options	Security	Port 14	Port 13	Reserved	Reserved	Reserved	Reserved	Reserved	Reserved	Port 6	Port 5	Port 4	Port 3	Port 2	Port 1	Digital In
Default	0	0	0	0	0	0	0	0	0	0	0	0	0	0	0	0
Bit	15	14	13	12	11	10	9	8	7	6	5	4	3	2	1	0

887 Write Mask Act

Options	Security	Port 14	Port 13	Reserved	Port 11	Port 10	Port 9	Port 8	Port 7	Port 6	Port 5	Port 4	Port 3	Port 2	Port 1	Reserved
Default	0	0	0	0	0	0	0	0	0	1	1	1	1	1	1	0
Bit	15	14	13	12	11	10	9	8	7	6	5	4	3	2	1	0

888 Write Mask Cfg

Options	Reserved	Port 14	Port 13	Reserved	Port 11	Port 10	Port 9	Port 8	Port 7	Port 6	Port 5	Port 4	Port 3	Port 2	Port 1	Reserved
Default	0	1	1	0	1	1	1	1	1	1	1	1	1	1	1	0
Bit	15	14	13	12	11	10	9	8	7	6	5	4	3	2	1	0

File	Group	No.	Display Name Full Name Description	Values		Read-Write	Data Type
COMMUNICATION	DPI Datalinks		**Important:** DPI Datalinks parameters are used for datalinks on legacy 20-COMM-*n* communication devices. For embedded EtherNet/IP or 20-750 option datalinks, refer to the parameters associated with the specific option module.				
		895 **896**	**Data In A1** **Data In A2** Data Input A*n* Parameter number whose value will be written from a communications device data table.	Default: Min/Max:	0 (0 = "Disabled") 0 / 159999	RW	32-bit Integer
		897 **898**	**Data In B1** **Data In B2** Data Input B*n* Parameter number whose value will be written from a communications device data table.	See [Data In A1].			
		899 **900**	**Data In C1** **Data In C2** Data Input C*n* Parameter number whose value will be written from a communications device data table.	See [Data In A1].			
		901 **902**	**Data In D1** **Data In D2** Data Input D*n* Parameter number whose value will be written from a communications device data table.	See [Data In A1].			
		905 **906**	**Data Out A1** **Data Out A2** Data Output A*n* Parameter number whose value will be written to a communications device data table.	Default: Min/Max:	0 (0 = "Disabled") 0 / 159999	RW	32-bit Integer
		907 **908**	**Data Out B1** **Data Out B2** Data Output B*n* Parameter number whose value will be written from a communications device data table.	See [Data Out A1].			
		909 **910**	**Data Out C1** **Data Out C2** Data Output C*n* Parameter number whose value will be written from a communications device data table.	See [Data Out A1].			
		911 **912**	**Data Out D1** **Data Out D2** Data Output D*n* Parameter number whose value will be written from a communications device data table.	See [Data Out A1].			

File	Group	No.	Display Name Full Name Description	Values	Read-Write	Data Type
COMMUNICATION	Owners	919	**Stop Owner** Stop Owner Indicates which port is currently issuing a valid stop command.	0 = False 1 = True	RO	16-bit Integer
		920	**Start Owner** Start Owner Indicates which port is currently issuing a valid start command.	0 = False 1 = True	RO	16-bit Integer
		921	**Jog Owner** Jog Owner Indicates which port is currently issuing a valid jog command.	0 = False 1 = True	RO	16-bit Integer
		922	**Dir Owner** Direction Owner Indicates which port has exclusive control of direction changes. Only one port can own the direction function at one time.	0 = False 1 = True	RO	16-bit Integer

919 Stop Owner

Options	Reserved	Port 14	Port 13 (1)	Reserved	Reserved	Reserved	Reserved	Reserved	Reserved	Port 6	Port 5	Port 4	Port 3	Port 2	Port 1	Digital In (2)
Default	0	0	0	0	0	0	0	0	0	0	0	0	0	0	0	0
Bit	15	14	13	12	11	10	9	8	7	6	5	4	3	2	1	0

(1) 755 drives only.
(2) If parameter 150 [Digital In Cfg] =1 "Run Level" the absence of a run command is indicated as a stop asserted.

920 Start Owner

Options	Reserved	Port 14	Port 13 (1)	Reserved	Reserved	Reserved	Reserved	Reserved	Reserved	Port 6	Port 5	Port 4	Port 3	Port 2	Port 1	Digital In
Default	0	0	0	0	0	0	0	0	0	0	0	0	0	0	0	0
Bit	15	14	13	12	11	10	9	8	7	6	5	4	3	2	1	0

(1) 755 drives only.

921 Jog Owner

Options	Reserved	Port 14	Port 13 (1)	Reserved	Reserved	Reserved	Reserved	Reserved	Reserved	Port 6	Port 5	Port 4	Port 3	Port 2	Port 1	Digital In
Default	0	0	0	0	0	0	0	0	0	0	0	0	0	0	0	0
Bit	15	14	13	12	11	10	9	8	7	6	5	4	3	2	1	0

(1) 755 drives only.

922 Dir Owner

Options	Reserved	Port 14	Port 13 (1)	Reserved	Reserved	Reserved	Reserved	Reserved	Reserved	Port 6	Port 5	Port 4	Port 3	Port 2	Port 1	Digital In
Default	0	0	0	0	0	0	0	0	0	0	0	0	0	0	0	0
Bit	15	14	13	12	11	10	9	8	7	6	5	4	3	2	1	0

(1) 755 drives only.

File	Group	No.	Display Name Full Name Description	Values	Read-Write	Data Type
COMMUNICATION	Owners	923	**Clear Flt Owner** Clear Fault Owner Indicates which port is currently clearing a fault.	0 = False 1 = True	RO	16-bit Integer
		924	**Manual Owner** Manual Owner Adapter that has requested manual control of all drive logic and/or reference functions. If an adapter is in manual lockout, all other functions (except stop) on all other adapters are locked out and non-functional. Monitor manual lockout status the associated owner status parameters.	0 = False 1 = True	RO	16-bit Integer
		925	**Ref Select Owner** Reference Select Owner Indicates which port is issuing a valid reference select.	0 = False 1 = True	RO	16-bit Integer

Options	Reserved	Port 14	Port 13 (1)	Reserved	Reserved	Reserved	Reserved	Reserved	Reserved	Port 6	Port 5	Port 4	Port 3	Port 2	Port 1	Digital In
Default	0	0	0	0	0	0	0	0	0	0	0	0	0	0	0	0
Bit	15	14	13	12	11	10	9	8	7	6	5	4	3	2	1	0

(1) 755 drives only.

File	Group	No.	Display Name Full Name Description	Values		Read-Write	Data Type
COMMUNICATION	ODK Datalinks	**1700…1731**	**UserData Int 00…31** User Data Integer 00…31 Available for storage of a 32-bit integer value by the user.	Default: Min/Max:	0 -2147483647 / 2147483647	RW	32-bit Integer
		1800…1831	**UserData Real 00…31** User Data Real 00…31 Available for storage of a real value by the user.	Default: Min/Max:	0.0000 -2147483647 / 2147483647	RW	Float
		1900 **1904** **1908** **1912** **1916** **1920** **1924** **1928**	**ScaleBlk Sel 00** **ScaleBlk Sel 01** **ScaleBlk Sel 02** **ScaleBlk Sel 03** **ScaleBlk Sel 04** **ScaleBlk Sel 05** **ScaleBlk Sel 06** **ScaleBlk Sel 07** Scale Block Select *n* Selects the source value to be scaled.	Default: Min/Max:	Disabled 0 / 159999	RW	32-bit Integer
		1901 **1905** **1909** **1913** **1917** **1921** **1925** **1929**	**ScaleBlk Scal 00** **ScaleBlk Scal 01** **ScaleBlk Scal 02** **ScaleBlk Scal 03** **ScaleBlk Scal 04** **ScaleBlk Scal 05** **ScaleBlk Scal 06** **ScaleBlk Scal 07** Scale Block Scale *n* Scales (multiplier) the selected parameter value.	Default: Min/Max:	1.0000 -2147483647 / 2147483647	RW	Float
		1902 **1906** **1910** **1914** **1918** **1922** **1926** **1930**	**ScaleBlk Int 00** **ScaleBlk Int 01** **ScaleBlk Int 02** **ScaleBlk Int 03** **ScaleBlk Int 04** **ScaleBlk Int 05** **ScaleBlk Int 06** **ScaleBlk Int 07** Scale Block Integer *n* Displays the scaling result as a 32-bit integer value.	Default: Min/Max:	0 -2147483647 / 2147483647	RO	32-bit Integer
		1903 **1907** **1911** **1915** **1919** **1923** **1927** **1931**	**ScaleBlk Real 00** **ScaleBlk Real 01** **ScaleBlk Real 02** **ScaleBlk Real 03** **ScaleBlk Real 04** **ScaleBlk Real 05** **ScaleBlk Real 06** **ScaleBlk Real 07** Scale Block Real *n* Displays the scaling result as a real value.	Default: Min/Max:	0.0000 -2147483647 / 2147483647	RO	Float

Drive (Port 0) Diagnostics File

File	Group	No.	Display Name Full Name Description	Values		Read-Write	Data Type
DIAGNOSTICS	Status	**930**	**Speed Ref Source** Speed Reference Source Indicates the currently selected source for value displayed in P593 [Limited Spd Ref]. The Speed Reference Source displays the parameter number that is supplying the speed reference. For example, if Speed Reference Source contains the value 546, then P546 [Spd Ref A Stpt] is the source of the speed reference.	Default: Min/Max:	0 0 / 159999	RO	32-bit Integer
		931	**Last StartSource** Last Start Source Displays the source that initiated the most recent start sequence. All bits in this parameter are refreshed each time the drive receives a start command.	Default: Options:	0 = Read Only 0 = “Pwr Removed” 1-6 = “Port 1-6” 7 = “Digital In” 8 = “Sleep” 9 = “Jog” 10 = “Profiling” 11 = “AutoRestart” 12 = “Pwr Up Start” 13 = “Fault” 14 = “Enable” 15 = “Autotune” 16 = “Precharge” 17 = “Safety” 18 = “Fast Stop” 19 = “Port 13” 20 = “Port 14”	RO	32-bit Integer
		932	**Last Stop Source** Last Stop Source Displays the source that initiated the most recent stop sequence. All bits in this parameter are refreshed each time the drive receives a stop command.	Default: Options:	0 = Read Only 0 = “Pwr Removed” 1-6 = “Port 1-6” 7 = “Digital In” 8 = “Sleep” 9 = “Jog” 10 = “Profiling” 11 = “AutoRestart” 12 = “Pwr Up Start” 13 = “Fault” 14 = “Enable” 15 = “Autotune” 16 = “Precharge” 17 = “Safety” 18 = “Fast Stop” 19 = “Port 13” 20 = “Port 14”	RO	32-bit Integer

File	Group	No.	Display Name Full Name Description	Values	Read-Write	Data Type
DIAGNOSTICS	Status	933	**Start Inhibits** Start Inhibits Indicates which condition is preventing the drive from starting or running.		RO	32-bit Integer

Options	Reserved	Reserved	Reserved	Reserved	Reserved	Reserved	Reserved	Reserved	Reserved	Reserved	Reserved	Reserved	Reserved	Reserved	Reserved	Reserved	Reserved	Reserved	Reserved	Reserved	Reserved	CommutNotCfg	Profiler (1)	Sleep	Safety	Startup	Database	Stop	Precharge	Enable	Alarm	Faulted
Default	0	0	0	0	0	0	0	0	0	0	0	0	0	0	0	0	0	0	0	0	0	0	0	0	0	0	0	0	0	0	0	0
Bit	31	30	29	28	27	26	25	24	23	22	21	20	19	18	17	16	15	14	13	12	11	10	9	8	7	6	5	4	3	2	1	0

(1) 755 drives only.

0 = False
1 = True

Bit 0 "Faulted" – Drive is in a faulted state. See P951 [Last Fault Code].
Bit 1 "Alarm" – A Type 2 alarm exists. See P961 [Type 2 Alarms].
Bit 2 "Enable" – An Enable input is open.
Bit 3 "Precharge" – Drive is in precharge. See P321 [Prchrg Control], P11 [DC Bus Volts].
Bit 4 "Stop" – Drive is receiving a stop signal. See P919 [Stop Owner].
Bit 5 "Database" – Database is performing a download operation.
Bit 6 "Startup" – Startup is active and preventing a start. Go to Start-Up Routine and abort.
Bit 7 "Safety" – Safety option module is preventing a start.
Bit 8 "Sleep" – Sleep function is issuing a stop. See P350 [Sleep Wake Mode], P351 [SleepWake RefSel].
Bit 9 "Profiler" – Profiler function is issuing a stop. See P1210 [Profile Status].
Bit 10 "CommutNotCfg" – The associated PM motor commutation function has not been configured for use.

File	Group	No.	Display Name Full Name Description	Values	Read-Write	Data Type
DIAGNOSTICS	Status	934	**Last StrtInhibit** Last Start Inhibit Displays the Inhibit which prevented the last Start signal from starting the drive. Bits will be cleared after the next successful start sequence. See parameter 933 [Start Inhibits] for bit descriptions.		RO	32-bit Integer

Options	Reserved	Reserved	Reserved	Reserved	Reserved	Reserved	Reserved	Reserved	Reserved	Reserved	Reserved	Reserved	Reserved	Reserved	Reserved	Reserved	Reserved	Reserved	Reserved	Reserved	Reserved	CommutNotCfg	Profilier	Sleep	Safety	Startup	Database	Stop	Precharge	Enable	Alarm	Faulted
Default	0	0	0	0	0	0	0	0	0	0	0	0	0	0	0	0	0	0	0	0	0	0	0	0	0	0	0	0	0	0	0	0
Bit	31	30	29	28	27	26	25	24	23	22	21	20	19	18	17	16	15	14	13	12	11	10	9	8	7	6	5	4	3	2	1	0

0 = False
1 = True

File	Group	No.	Display Name Full Name Description	Values	Read-Write	Data Type
DIAGNOSTICS	Status	935	**Drive Status 1** Drive Status 1 Present operating condition of the drive.		RO	32-bit Integer

Options	Regen	Motor OL	Enable On	Bus Frq Reg	Cur Limit	At Limit	At Home	AtZero Speed	Torque Mode	PositionMode	Speed Mode	DB Active	DC Braking	Stopping	Jogging	Running	Emrg OvrRide	SpdRef Bit 4	SpdRef Bit 3	SpdRef Bit 2	SpdRef Bit 1	SpdRef Bit 0	Manual	At Speed	Faulted	Alarm	Decelerating	Accelerating	Actual Dir	Command Dir	Active	Ready
Default	0	0	0	0	0	0	0	0	0	0	0	0	0	0	0	0	0	0	0	0	0	0	0	0	0	0	0	0	0	0	0	0
Bit	31	30	29	28	27	26	25	24	23	22	21	20	19	18	17	16	15	14	13	12	11	10	9	8	7	6	5	4	3	2	1	0

0 = Condition False
1 = Condition True

Bit 0 "Ready" – Condition is true if there are no start inhibits indicated by P933 [Start Inhibits]. When parameter 150 [Digital In Cfg] option 1 "Run Level" is selected and the run command is low, this bit will also be low.

Bit 1 "Active" – Condition is true if drive is modulating.

Bit 2 "Command Dir" – 1 = Commanded direction is forward. 0 = Commanded direction is reverse.

Bit 3 "Actual Dir" – 1 = Actual direction is forward. 0 = Actual direction is reverse.

Bit 4 "Accelerating" – For flux vector and non-vector control modes, this bit indicates when the actual motor speed is increasing due to change in speed reference. When accelerating, the motor speed is moving away from zero in either the positive (forward) or negative (reverse) direction. In adjustable voltage control mode, accelerating relates to an increasing output voltage and frequency. The "accelerating" bit will become clear when any of the following conditions occur:

- drive inactive (Bit 1 "Active" status clear)
- when "At Speed" (Bit 8 status set)
- when "AtZero Speed" (Bit 24 set)
- when "DC Braking" (Bit 19 set)
- when the drive is operating as a torque regulator (Bit 23 without Bits 21 and 22)
- when the drive is is operating in position mode (Bit 22)

Bit 5 "Decelerating" – This bit compliments the Accelerating status Bit 4 for the condition where the motor speed is decreasing due to a change in speed reference. When decelerating, the motor speed is moving toward zero in either the positive (forward) or negative (reverse) direction. In adjustable voltage control mode, decelerating relates to a decreasing output voltage and frequency. The conditions that will clear this bit are the same as those that apply to the Accelerating status bit.

Bit 8 "At Speed" – This bit will become set when the actual motor speed has reached the speed reference value. This condition is determined by comparing P131 [Active Vel Fdbk] against P597 [Final Speed Ref]. "At Speed" occurs when the difference between speed reference and feedback is within 1 percent of motor nameplate speed. In adjustable voltage control mode, the "At Speed" condition will indicate when the output voltage and frequency have completed their ramps and are no longer changing. The "At Speed" bit will become clear when any of the following conditions occur: drive inactive (Bit 1 "Active" status clear) or when accelerating (Bit 4 set) or when decelerating (Bit 5 set).

File	Group	No.	Display Name Full Name Description	Values	Read-Write	Data Type
DIAGNOSTICS	Status		**Drive Status 1 Bit Descriptions** Bits 10… 14 "SpdRef Bit *x*" – See Table 935A: Reference Status:			

Table 935A: Reference Status

Bit	14	13	12	11	10	Reference Source	Parameter
	0	0	0	0	1	Auto, Ref A	545
	0	0	0	1	0	Auto, Ref B	550
	0	0	0	1	1	Auto, Preset 3	573
	0	0	1	0	0	Auto, Preset 4	574
	0	0	1	0	1	Auto, Preset 5	575
	0	0	1	1	0	Auto, Preset 6	576
	0	0	1	1	1	Auto, Preset 7	577
	1	0	0	0	0	MAN, Port 0, DIGIN SEL	563
	1	0	0	0	1	MAN, Port 1	871
	1	0	0	1	0	MAN, Port 2	872
	1	0	0	1	1	MAN, Port 3	873
	1	0	1	0	0	MAN, Port 4	874
	1	0	1	0	1	MAN, Port 5	875
	1	0	1	1	0	MAN, Port 6	876
	1	1	1	0	1	MAN, Port 13 INT. ENET	877
	1	1	1	1	0	MAN, Port 14 DRV LOGIX	878
	1	1	1	1	1	ALT MAN REF SEL	328

File	Group	No.	Display Name Full Name Description	Values	Read-Write	Data Type
DIAGNOSTICS	Status		Bit 15 "Emrg OvrRide" – This bit is set when the drive is in Emergency Override. Bit 16 "Running" – This bit indicates that the drive has successfully responded to a start signal. The "Active" (Bit 1) status bit will also be set at the same time as the Running status. The "Running" bit will remain set while the drive's control loops are active and during a controlled stop. The "Running" bit will be clear due to any of the following conditions: drive stopped, drive coast stop, drive jogging, drive autotuning. Bit 17 "Jogging" – This bit indicates that the drive has successfully responded to a jog signal. The "Active" (Bit 1) status bit will also be set at the same time as the Jogging status. The "Jogging" bit will remain set while the drive's control loops are active and during a controlled stop. The "Jogging" bit will remain set after the jog signal is removed until the drive is stopped. The "Jogging" bit will be clear due to any of the following conditions: drive stopped, drive coast stop, drive running, drive autotuning. Bit 18 "Stopping" – Drive is attempting to bring the motor to rest due to a Stop command. Bit 19 "DC Braking" – Drive is performing DC Braking. Bit 20 "DB Active" – The Dynamic Brake is active. Bit 21 "Speed Mode" – When set, the "Speed Mode" bit indicates that motor speed is the active regulation mode. This is the default case when operating in non-vector control mode, since position and torque can only be controlled in vector control mode. The "Speed Mode" status bit will clear due to any of the following conditions: drive operating in another regulation mode such as a position regulator, torque regulator, adjustable voltage control mode. The "Speed Mode" status bit will also clear if the drive is not active (status bit 1 clear). In cases where the control can automatically switch between speed and torque, such as SLAT FVC control modes, the "Speed Mode" bit will indicate when speed control is active. In the "Sum" FVC control mode where the speed regulator's output is added to a torque reference, both the "Speed Mode" and "Torque Mode" status bits will become set while the drive is active. Bit 22 "PositionMode" – When set, the "PositionMode" bit indicates that motor position is the active regulation mode. Position control is only available when the drive is operating in a vector control mode with a speed and position feedback device. The "Position Mode" status bit will clear due to any of the following conditions: drive operating in a non-position regulation mode such as a speed regulator, torque regulator, adjustable voltage control mode. The "PositionMode" status bit will also clear if the drive is not active (status Bit 1 clear). Bit 23 "Torque Mode" – When set, the "Torque Mode" bit indicates that motor torque is the active regulation mode. Torque control is only available when the drive is operating in a vector control mode. The "Torque Mode" status bit will clear due to any of the following conditions: drive operating in another regulation mode such as a speed regulator, position regulator, adjustable voltage control mode. The "Torque Mode" status bit will also clear if the drive is not active (status Bit 1 clear). In cases where the control can automatically switch between speed and torque, such as SLAT FVC control modes, the "Torque Mode" bit will indicate when torque control is active. In the "Sum" FVC control mode where the speed regulator's output is added to a torque reference, both the "Speed Mode" and "Torque Mode" status bits will become set while the drive is active. Bit 24 "AtZero Speed" – When set, the "AtZero Speed" status bit indicates that the value of P131 [Active Vel Fdbk] is near zero. This status bit is set when the feedback speed magnitude (sign independent) becomes less than the level set in P525 [Zero Speed Limit]. This bit will clear when the speed exceeds twice the zero speed level. Bit 25 "At Home" – This bit is set when the difference between P847 [Psn Fdbk] and P737 [Actual Home Psn] is within P726 [In Pos Psn Band]. Bit 26 "At Limit" – This bit is set when a bit in P945 [At Limit Status] is set. See P945 [At Limit Status] for more details. Bit 27 "Cur Limit" – This bit is set when the drive is running with limited speed or torque avoid an overcurrent condition. Bit 28 "Bus Frq Reg" – This bit is set when the speed has been regulate to avoid an overcurrent condition. Bit 29 "Enable On" – This bit is set when the drive is enabled. Bit 30 "Motor OL" – This bit is set when an excessive motor load exists. Bit 31 "Regen" – This bit is set when the motor torque direction is opposite of the speed direction.			

File	Group	No.	Display Name Full Name Description	Values	Read-Write	Data Type
DIAGNOSTICS	Status	936	**Drive Status 2** Drive Status 2 Present operating condition of the drive.		RO	32-bit Integer

Options	Reserved	Reserved	Reserved	Reserved	Reserved	Reserved	Reserved	Reserved	Reserved	Reserved	Reserved	Reserved	Reserved	Reserved	Reserved	Reserved	AutClrCntDwn	AutoClr Act	N-1 Operate (1)	Decel Rate (2)	Accel Rate (2)	PID FB Loss	Autotuning	PrchrgClosed	Adj VltgMode (2)	Reserved	FdbkLoss SwO	Flux Braking	Reserved	HS Fan On	AuRstrCntDwn	AutoRstr Act
Default	0	0	0	0	0	0	0	0	0	0	0	0	0	0	0	0	0	0	0	0	0	0	0	0	0	0	0	0	0	0	0	0
Bit	31	30	29	28	27	26	25	24	23	22	21	20	19	18	17	16	15	14	13	12	11	10	9	8	7	6	5	4	3	2	1	0

(1) 755 Frame 8 drives and larger only.
(2) 753 drives only.

0 = Condition False
1 = Condition True

Bit 0 “AutoRstr Act” – Auto Restart has been activated.
Bit 1 “AuRstrCntDwn” – Auto Restart is counting down the delay time programmed to attempt a restart.
Bit 2 “HS Fan On” – Heatsink fan is running.
Bit 4 “Flux Braking” –
Bit 5 “FdbkLoss SwO” – This status bit will indicate that a F97 “Auto Tach Switch” fault has occurred. The F97 fault is associated with the option to automatically switch to the alternate feedback device upon failure of the primary device. The F97 fault indicates that both primary and alternate devices have failed. This could occur either before or after the switchover to the alternate device.
Bit 7 “Adj VltgMode” – Invalid parameter selection detected.
Bit 8 “PrchrgClosed” – Precharge relay is closed.
Bit 9 “Autotuning” – Drive is running an Autotune procedure.
Bit 10 “PID FB Loss” – The feedback selected for the PID feedback source has detected a Loss condition. The analog feedback signal of Process PID is below 2V (0…10V signal) or below 4 mA (4…20 mA signal).
Bit 11 “Accel Rate” – When set, indicates that P536 [Accel Time 2] is active. This is the acceleration time from zero to rated frequency/speed for the speed control’s reference ramp. When clear, indicates that P535 [Accel Time 1] is active. Accel Time 1 is the default selection.
Bit 12 “Decel Rate” – When set, indicates that P538 [Decel Time 2] is active. This is the deceleration time from rated frequency/speed to zero for the speed control’s reference ramp. When clear, indicates that P537 [Decel Time 1] is active. Decel Time 1 is the default selection.
Bit 13 “N-1 Operate” – Indicates the parallel drive is in operation mode.
Bit 14“AutoClr Act” – set when an Auto clearable fault is detected & cleared when P339 [AutoClrFlt Delay] expires.
Bit 15 “AutClrCntDwn” – set when P339 [Auto ClrFltDelay] expires & cleared when this timer expires a <START> input/fault condition (auto-clearable or trippable).

File	Group	No.	Display Name Full Name Description	Values	Read-Write	Data Type
DIAGNOSTICS	Status	937	**Condition Sts 1** Condition Status 1		RO	32-bit Integer

Status of conditions that may or may not result in the drive taking action (faulting), based on configuration of protective functions.

The occurrence of conditions that have been configured as faults are indicated by P952 [Fault Status A] and those configured as alarms are indicated by P959 [Alarm Status A].

Options	Reserved	Reserved	Reserved	Reserved	Reserved	Reserved	Reserved	Reserved	Reserved	Reserved	Reserved	Reserved	Reserved	Reserved	Reserved	Reserved	OW Timeout (1)	GndWarning	ExtPrchrgErr	PosFdbkLoss	AuxFdbkLoss	AltFdbkLoss	PriFdbkLoss	Shear Pin 2	Shear Pin 1	Decel Inhib	OutPhaseLoss	InPhaseLoss	Load Loss	Motor OL	UnderVoltage	Power Loss
Default	0	0	0	0	0	0	0	0	0	0	0	0	0	0	0	0	0	0	0	0	0	0	0	0	0	0	0	0	0	0	0	0
Bit	31	30	29	28	27	26	25	24	23	22	21	20	19	18	17	16	15	14	13	12	11	10	9	8	7	6	5	4	3	2	1	0

(1) 753 drives only

0 = Condition False
1 = Condition True

Bit 0 "Power Loss" – A Power Loss exception has been issued. Power Loss detection is a function of the bus manager and is configured by [Pwr Loss Mode *n*] and [Pwr Loss *n* Level]. The corresponding fault and alarm are processed in the background according to P449 [Power Loss Actn] and the state of this bit.

Bit 1 "UnderVoltage" – An Under Voltage exception has been issued. Parameter 460 [UnderVltg Action] must be set to an option other than 0 "Ignore" for this bit to be set. The corresponding fault and alarm are processed immediately within the same precharge function where the condition status bit is detected.

Bit 2 "Motor OL" – An excessive motor load exists. If P410 [Motor OL Actn] is set to option 0 "Ignore" the overload function will not produce a condition status bit, alarm status, or fault status. If P410 [Motor OL Actn] is set to option 1 "Alarm" the condition status bit and alarm will be set when the overload value exceeds P412 [Mtr OL Alarm Lvl]. Parameter 412 [Mtr OL Alarm Lvl] must be set to an option other than 0 "Ignore' to produce a condition status bit alarm.

Bit 3 "Load Loss" – This bit dependent on the setting of P441 [Load Loss Action] which must be set to an option other than 0 "Ignore" to be processed. The corresponding fault and alarm are processed in the background according to P441 [Load Loss Action] and the state of this bit.

Bit 4 "InPhaseLoss" – Input Phase Loss exception has been issued. The corresponding fault and alarm are processed in the background according to P462 [InPhase LossActn] and the state of this bit. Parameter 462 [InPhase LossActn] is not used to inhibit this bit.

Bit 5 "OutPhaseLoss" – Output Phase Loss exception has been issued. The corresponding fault and alarm are processed in the background according to P444 [OutPhaseLossActn] and the state of this bit. Parameter 444 [OutPhaseLossActn] is not used to inhibit this bit.

Bit 6 "Decel Inhib" – The drive is being Inhibited from decelerating to the commanded speed. If the drive is not decelerating (P935 [Drive Status 1] Bit 5 = 0), is not in the Run state, or if P635 [Spd Options Ctrl] Bit 0 = 1, this bit is cleared. Otherwise this bit is set when a decel inhibit condition is detected. Parameter 409 [Dec Inhibit Actn] has no affect on this bit.

Bit 7 "Shear Pin 1" – Value set in P436 [Shear Pin1 Level] has been reached or exceeded. Parameter 435 [Shear Pin 1 Actn] must be set to an option other than 0 "Ignore" for this bit to be set. The corresponding fault and alarm are processed in the background according to P435 [Shear Pin 1 Actn] and the state of this bit.

Bit 8 "Shear Pin 2" – Value set in P439 [Shear Pin2 Level] has been reached or exceeded. Parameter 438 [Shear Pin 2 Actn] must be set to an option other than 0 "Ignore" for this bit to be set. The corresponding fault and alarm are processed in the background according to P438 [Shear Pin 2 Actn] and the state of this bit.

Bit 9 "PriFdbkLoss" – When set, indicates that the device selected as the primary velocity feedback source has reported a device failure. P125 [Pri Vel Fdbk Sel] selects the device used as the primary velocity feedback source. The primary feedback device supplies motor speed feedback if the Automatic Tach Switchover option is either disabled or has not switched to the alternate feedback device. In order to report this condition as an alarm, the feedback loss configuration parameter for the primary feedback device must be configured for "Alarm."

Bit 10 "AltFdbkLoss" – When set, indicates that the device selected as the alternate velocity feedback source has reported a device failure. P128 [Alt Vel Fdbk Sel] selects the device used as the alternate velocity feedback source. The alternate feedback device supplies motor speed feedback if the Automatic Tach Switchover option is enabled and the primary feedback device has failed. In order to report this condition as an alarm, the feedback loss configuration parameter for the alternate feedback device must be configured for "Alarm."

Bit 11 "AuxFdbkLoss" – When set, indicates that the device selected as the auxiliary velocity feedback source has reported a device failure. P132 [Aux Vel Fdbk Sel] selects the device used as the auxiliary velocity feedback source. The auxiliary feedback device can be used to supply motor speed reference. In order to report this condition as an alarm, the feedback loss configuration parameter for the auxiliary feedback device must be configured for "Alarm."

Bit 12 "PosFdbkLoss" – When set, indicates that the device selected as the position feedback source has reported a device failure. P135 [Psn Fdbk Sel] selects the device used as the position feedback source. Position feedback is used for position control applications. It can be the same device used for velocity feedback or position feedback can be supplied by a separate device. In order to report this condition as an alarm, the feedback loss configuration parameter for the position feedback device must be configured for "Alarm."

Bit 13 "ExtPrchrgErr" – Selected digital input assigned to the external Precharge Seal control, P190 [DI Prchrg Seal], is not active when the bus has stabilized. The corresponding fault and alarm are processed according to P323 [Prchrg Err Cfg] and the state of this bit.

Bit 14 "GndWarning" – Value set in P467 [Ground Warn Lvl] has been exceeded. Parameter 466 [Ground Warn Actn] must be set to an option other than 0 "Ignore" for this bit to be set. The corresponding fault and alarm are processed in the background based on P466 [Ground Warn Actn] and the state of this bit.

Bit 15 "OW Timeout" – The value set in P1172 [TorqAlarm Timeout] has been exceeded. This bit is set by the pump off algorithm. The corresponding fault and alarm are processed in the background based on the state of this bit.

File	Group	No.	Display Name Full Name Description	Values		Read-Write	Data Type
DIAGNOSTICS	Status	**940**	**Drive OL Count** Drive Overload Count Indicates power unit overload (IT) in percentage. When the value reaches 100%, the power unit overload fault occurs.	Units: Default: Min/Max:	% 0.00 0.00 / 200.00	RO	Real
		941	**IGBT Temp Pct** Insulated-Gate Bipolar Transistor Temperature Percent Indicates IGBT junction temperature in percentage of the maximum junction temperature. The value of this parameter is calculated.	Units: Default: Min/Max:	% 0.00 –/+200.00	RO	Real
		942	**IGBT Temp C** Insulated-Gate Bipolar Transistor Temperature Celsius Indicates IGBT junction temperature in centigrade. The value of this parameter is calculated.	Units: Default: Min/Max:	DegC 0.00 –/+200.00	RO	Real
		943	**Drive Temp Pct** Drive Temperature Percent Indicates operating temperature of the drive power section (heat-sink) in percentage of the maximum heat-sink temperature. The value of this parameter is measured.	Units: Default: Min/Max:	% 0.00 –/+200.00	RO	Real
		944	**Drive Temp C** Drive Temperature Celsius Present operating temperature of the drive power section. The value of this parameter is measured.	Units: Default: Min/Max:	DegC 0.00 –/+200.00	RO	Real

File	Group	No.	Display Name Full Name Description	Values	Read-Write	Data Type
DIAGNOSTICS	Status	945	**At Limit Status** At Limit Status Status of dynamic conditions within the drive that are either active or a limit is being applied.		RO	32-bit Integer

Options	Cur Rate Lmt	TrqPrvNegLmt	TrqPrvPosLmt	Mtr Vltg Lkg	BusVltgFVLmt	Therm RegLmt	Cur Lmt FV	Regen PwrLmt	Mtrng PwrLmt	Trq Neg Lmt	Trq Pos Lmt	FlxCurNegLmt	FlxCurPosLmt	TrqCurNegLmt	TrqCurPosLmt	PsnReg HiSpd	PsnReg LoSpd	PsnReg HiLmt	PsnReg LoLmt	DB Res Limit	PWM FreqLmt	Economize	Flux Braking	FreqOSNegLmt	FreqOSPosLmt	Freq Lo Lmt	Freq Hi Lmt	Spd Reg Lmt	OverSpd Lmt	MaxSpeed Lmt	Bus Vltg Lmt	Current Lmt
Default	0	0	0	0	0	0	0	0	0	0	0	0	0	0	0	0	0	0	0	0	0	0	0	0	0	0	0	0	0	0	0	0	0
Bit	31	30	29	28	27	26	25	24	23	22	21	20	19	18	17	16	15	14	13	12	11	10	9	8	7	6	5	4	3	2	1	0	

0 = Condition False
1 = Condition True

Bit 0 "Current Lmt" – Scalar current limit is adjusting the output frequency
Bit 1 "Bus Vltg Lmt" – Scalar bus voltage limit is adjusting the output frequency
Bit 2 "MaxSpeed Lmt" – Motor speed reference is limited to maximum forward speed or maximum reverse speed. See P520 [Max Fwd Speed], P521 [Max Rev Speed].
Bit 3 "OverSpd Lmt" – Motor speed reference positive (+) trim is at maximum speed limit plus or minus (+/-) the overspeed limit
Bit 4 "Spd Reg Lmt" – The output of the drive's speed regulator has reached limit. See P655 [Spd Reg Pos Lmt], P656 [Spd Reg Neg Lmt].
Bit 5 "Freq Hi Lmt" – Scalar control inner ramp high limit is active
Bit 6 "Freq Lo Lmt" – Scalar control inner ramp low limit is active
Bit 7 "FreqOSPosLmt" – Scalar control inner ramp positive (+) overspeed limit is active
Bit 8 "FreqOSNegLmt" – Scalar control inner ramp negative (-) overspeed limit is active
Bit 9 "Flux Braking" – Flux braking is active
Bit 10 "Economize" – Economize is active
Bit 11 "PWM FreqLmt" – PWM frequency is reduced by the thermal regulator
Bit 12 "DB Res Limit" – Dynamic brake thermal protection is active. Verify P385 [DB ExtPulseWatts].
Bit 13 "PsnReg LoLmt" – The position integrator low limit is active
Bit 14 "PsnReg HiLmt" – The position integrator high limit is active
Bit 15 "PsnReg LoSpd" – The position regulator output (speed) is at low limit
Bit 16 "PsnReg HiSpd" – The position regulator output (speed) is at high limit
Bit 17 "TrqCurPosLmt" – The torque current positive limit is active
Bit 18 "TrqCurNegLmt" – The torque current negative limit is active
Bit 19 "FlxCurPosLmt" – The flux current positive limit is active
Bit 20 "FlxCurNegLmt" – The flux current negative limit is active
Bit 21 "Trq Pos Lmt" – The positive torque limit is active. See P670 [Pos Torque Limit].
Bit 22 "Trq Neg Lmt" – The negative torque limit is active. See P671 [Neg Torque Limit].
Bit 23 "Mtrng PwrLmt" – The motoring power limit is active. See P427 [Motor Power Lmt].
Bit 24 "Regen PwrLmt" – The regeneration power limit is active. See P426 [Regen Power Lmt].
Bit 25 "Cur Lmt FV" – The current limit parameter or analog Input current limit is active
Bit 26 "Therm RegLmt" – The thermal regulator torque limit is active
Bit 27 "BusVltgFVLmt" – The bus voltage regulator torque limit is active
Bit 28 "Mtr Vltg Lkg" – The Vds motor voltage limit is active
Bit 29 "TrqPrvPosLmt" – The torque proving positive torque limit is active
Bit 30 "TrqPrvNegLmt" – The torque proving negative torque limit is active
Bit 31 "Cur Rate Lmt" – The Iqs rate limit is active

File	Group	No.	Display Name Full Name Description	Values	Read-Write	Data Type
DIAGNOSTICS	Status	946	**Safety Port Sts** Safety Port Status Indicates the port location of a valid feedback option for use with the Safe Speed Monitoring Option.		RO	16-bit Integer

Options	Reserved	Reserved	Reserved	Reserved	Reserved	Reserved	Reserved	Port 8	Port 7	Port 6	Port 5	Port 4	Reserved	Reserved	Reserved	Reserved
Default	0	0	0	0	0	0	0	0	0	0	0	0	0	0	0	0
Bit	15	14	13	12	11	10	9	8	7	6	5	4	3	2	1	0

0 = Condition False
1 = Condition True

File	Group	No.	Display Name Full Name Description	Values	Read-Write	Data Type
DIAGNOSTICS	Fault/Alarm Info	950	**Minor Flt Cfg** Minor Fault Configuration Enables / Disables operation of the "Minor Fault" function, which allows the drive to continue running while some types of faults are present. In addition to setting this parameter, the "Flt Minor" action must be selected for the condition that is desired to result in a minor fault (see P410 [Motor OL Actn] for an example).		RW	16-bit Integer
		951	**Last Fault Code** Last Fault Code The fault code of the first fault since the last reset. There is often a chain of faults that occur during a breakdown. When troubleshooting, it is often helpful to know the first fault. This parameter is for convenience. A comprehensive history of fault information is available through the fault que (via HIM screens and / or software tools such as Drive Explorer).	Default: 0 Min/Max: 0 / 424648720	RO	32-bit Integer
		952	**Fault Status A** Fault Status A Indicates the occurrence of conditions that have been configured as faults. These conditions are from 937 [Condition Sts 1]. See parameter 937 [Condition Sts 1] for bit descriptions.		RO	32-bit Integer

Options	Reserved	Reserved	Reserved	Reserved	Reserved	Reserved	Reserved	Reserved	Reserved	Reserved	Reserved	Reserved	Reserved	Reserved	Reserved	Enable
Default	0	0	0	0	0	0	0	0	0	0	0	0	0	0	0	0
Bit	15	14	13	12	11	10	9	8	7	6	5	4	3	2	1	0

0 = Condition False
1 = Condition True

Options	Reserved	Reserved	Reserved	Reserved	Reserved	Reserved	Reserved	Reserved	Reserved	Reserved	Reserved	Reserved	Reserved	Reserved	Reserved	Reserved	Reserved	Reserved	Reserved	ExtPrchrgErr	PosFdbkLoss	AuxFdbkLoss	AltFdbkLoss	PriFdbkLoss	Shear Pin 2	Shear Pin 1	Decel Inhib	OutPhaseLoss	InPhaseLoss	Load Loss	Motor OL	UnderVoltage	Power Loss
Default	0	0	0	0	0	0	0	0	0	0	0	0	0	0	0	0	0	0	0	0	0	0	0	0	0	0	0	0	0	0	0	0	0
Bit	31	30	29	28	27	26	25	24	23	22	21	20	19	18	17	16	15	14	13	12	11	10	9	8	7	6	5	4	3	2	1	0	

0 = Condition False
1 = Condition True

File	Group	No.	Display Name Full Name Description	Values	Read-Write	Data Type
DIAGNOSTICS	Fault/Alarm Info	953	**Fault Status B** Fault Status B Indicates the occurrence of conditions that have been configured as faults.		RO	32-bit Integer

Options	Reserved	Reserved	Reserved	Reserved	Reserved	Reserved	Reserved	Reserved	Reserved	End Lmt Sw	TrvlLimCflct	Over Travel	OW Alarm TO	Ground Fault	TPEnclsCfg (1)	TrqPrvSpdBnd (1)	HW OverCur	SW OverCur	AuRstExhaust	IXOVoltRange	FluxAmpsRang	IRVoltsRange	SafetyBrdFlt	Prchrg Open	Overspd Lmt	Excess Load	SinkUnderTmp	TransistorOT	Heatsink OT	Drive OL	OverVoltage	Aux InputFlt
Default	0	0	0	0	0	0	0	0	0	0	0	0	0	0	0	0	0	0	0	0	0	0	0	0	0	0	0	0	0	0	0	0
Bit	31	30	29	28	27	26	25	24	23	22	21	20	19	18	17	16	15	14	13	12	11	10	9	8	7	6	5	4	3	2	1	0

(1) 755 drives only.

0 = Condition False
1 = Condition True

Bit 0 “Aux InputFlt” –
Bit 1 “OverVoltage” – Over voltage trip occurred.
Bit 2 “Drive OL” – Indicates the drive is overloaded. P940 [Drive OL Count] reached 100%.
Bit 3 “Heatsink OT” – Indicates the drive heatsink is over temperature. P943 [Drive Temp Pct] reached 100%.
Bit 4 “TransistorOT” – Indicates the transistor (IGBT) junction is over temperature. P941 [IGBT Temp Pct] reached 100%.
Bit 5 “SinkUnderTmp” – Indicates the heatsink temperature is under -18.7 °C (-2 °F).
Bit 6 “Excess Load” – Motor did not come up to speed in the allotted time during autotune.
Bit 7 “Overspd Lmt” – When set, indicates that a F25 “OverSpeed Limit” fault has occurred. This is a non-configurable fault. An overspeed condition results when the motor speed falls outside of its normal operating range. The limits of this range are established by P521 [Max Rev Speed] - P524 [Overspeed Limit] = (lower limit) and P520 [Max Fwd Speed] + P524 [Overspeed Limit] = (upper limit). In flux vector control mode or scaler control mode with encoder, the motor speed used is a 2msec averaged value of P131 [Active Vel Fdbk]. In scaler control mode without an encoder, the overspeed check uses P1 [Output Frequency]. The overspeed condition must exist for at least 16 milliseconds before it causes a fault to occur.
Bit 8 “Prchrg Open” – Precharge relay is open.
Bit 9 “SafetyBrdFlt” – Safety board is in a faulted state.
Bit 10 “IRVoltsRange” – The Autotune IR voltage exceeded the range of P73 [IR Voltage Drop].
Bit 11 “FluxAmpsRang” – The Autotune Flux Current exceeded the range of P75 [Flux Current Ref].
Bit 12 “IXOVoltRange” – The Autotune Ixo voltage exceeded the range of P74 [Ixo Voltage Drop].
Bit 13 “AuRstExhaust” – The value set in P348 [Auto Rstrt Tries] has been exceeded.
Bit 14 “SW OverCur” – Drive output current has exceeded the 1ms 250% current rating.
Bit 15 “HW OverCur” – Drive output current has exceeded the hardware current trip limit.
Bit 16 “TrqPrvSpdBnd” – The allowable deviation between actual motor speed and ramped speed set in P1105 [Speed Dev Band] has been exceeded.
Bit 17 “TPEnclsCfg” – The Torque Proving function has been configured as Encoderless. Read the Attention statement under Lifting/Torque Proving on page 372.
Bit 18 “Ground Fault” – Current path to earth ground greater than 25% drive rated current detected.
Bit 19 “OW Alarm TO” – An A65 “OW TrqLvl Timeout” alarm has occurred.
Bit 20 “Over Travel” – The selected digital input for one of the over travel directions is active.
Bit 21 “TrvlLimCflct” – Travel limits are in conflict.
Bit 22 “End Lmt Sw” – The selected digital input for one of the end limit switches, P196 [DI Fwd End Limit] or P198 [DI Rev End Limit], has detected a falling edge and P313 [Actv SpTqPs Mode] is not set to 1 “Speed Reg.”

		954	**Status1 at Fault** Status 1 at Fault Captures and displays P935 [Drive Status 1] bit pattern at the time of the last fault. See parameter 935 [Drive Status 1] for bit descriptions.		RO	32-bit Integer

Options	Regen	Motor OL	Enable On	Bus Frq Reg	Cur Limit	At Limit	At Home	AtZero Speed	Torque Mode	PositionMode	Speed Mode	DB Active	DC Braking	Stopping	Jogging	Running	Emrg OvrRide	SpdRef Bit 4	SpdRef Bit 3	SpdRef Bit 2	SpdRef Bit 1	SpdRef Bit 0	Manual	At Speed	Faulted	Alarm	Decelerating	Accelerating	Actual Dir	Command Dir	Active	Ready
Default	0	0	0	0	0	0	0	0	0	0	0	0	0	0	0	0	0	0	0	0	0	0	0	0	0	0	0	0	0	0	0	0
Bit	31	30	29	28	27	26	25	24	23	22	21	20	19	18	17	16	15	14	13	12	11	10	9	8	7	6	5	4	3	2	1	0

0 = Condition False
1 = Condition True

File	Group	No.	Display Name Full Name Description	Values	Read-Write	Data Type
DIAGNOSTICS	Fault/Alarm Info	955	**Status2 at Fault** Status 2 at Fault Captures and displays P936 [Drive Status 2] bit pattern at the time of the last fault. See parameter 936 [Drive Status 2] for bit descriptions.		RO	32-bit Integer

Options	Reserved	Reserved	Reserved	Reserved	Reserved	Reserved	Reserved	Reserved	Reserved	Reserved	Reserved	Reserved	Reserved	Reserved	Reserved	Reserved	Reserved	Reserved	Reserved	Decel Rate	Accel Rate	PID FB Loss	Autotuning	PrchrgClosed	Reserved	Reserved	FdbkLoss SwO	Flux Braking	Reserved	HS Fan On	AuRstrCntDwn	AutoRstr Act
Default	0	0	0	0	0	0	0	0	0	0	0	0	0	0	0	0	0	0	0	0	0	0	0	0	0	0	0	0	0	0	0	0
Bit	31	30	29	28	27	26	25	24	23	22	21	20	19	18	17	16	15	14	13	12	11	10	9	8	7	6	5	4	3	2	1	0

0 = Condition False
1 = Condition True

DIAGNOSTICS	Fault/Alarm Info	956	**Fault Frequency** Fault Frequency Captures and displays the current value of P1 [Output Frequency], in Hertz, at the time of the last fault. Setting P300 [Speed Units] to option 1 "RPM" does not affect this parameter. For some faults, the value captured in this parameter may not match peak/low at time of fault due to data latency.	Units: Hz Default: 0.00 Min/Max: –/+ 650.00	RO	Real
DIAGNOSTICS	Fault/Alarm Info	957	**Fault Amps** Fault Amps Captures and displays the current value of P7 [Output Current], in Amps, at the time of the last fault. For some faults, the value captured in this parameter may not match peak/low at time of fault due to data latency.	Units: Amps Default: 0.00 Min/Max: 0.00 / P21 [Rated Amps] x 2	RO	Real
DIAGNOSTICS	Fault/Alarm Info	958	**Fault Bus Volts** Fault Bus Volts Captures and displays the current value of P11 [DC Bus Volts], in Volts DC, at the time of the last fault. For some faults, the value captured in this parameter may not match peak/low at time of fault due to data latency.	Units: V DC Default: 0.00 Min/Max: 0.00 / P20 [Rated Volts] x 2	RO	Real
DIAGNOSTICS	Fault/Alarm Info	959	**Alarm Status A** Alarm Status A Indicates the occurrence of conditions that have been configured as alarms. These events are from 937 [Condition Sts 1]. See parameter 937 [Condition Sts 1] for bit descriptions.		RO	32-bit Integer

Options	Reserved	Reserved	Reserved	Reserved	Reserved	Reserved	Reserved	Reserved	Reserved	Reserved	Reserved	Reserved	Reserved	Reserved	Reserved	Reserved	Reserved	Task Overrun	Gnd Warning	Reserved	PosFdbkLoss	AuxFdbkLoss	AltFdbkLoss	PriFdbkLoss	Shear Pin 2	Shear Pin 1	Decel Inhib	OutPhaseLoss	InPhaseLoss	Load Loss	Motor OL	UnderVoltage	Power Loss
Default	0	0	0	0	0	0	0	0	0	0	0	0	0	0	0	0	0	0	0	0	0	0	0	0	0	0	0	0	0	0	0	0	0	0
Bit	31	30	29	28	27	26	25	24	23	22	21	20	19	18	17	16	15	14	13	12	11	10	9	8	7	6	5	4	3	2	1	0

0 = Condition False
1 = Condition True

File	Group	No.	Display Name Full Name Description	Values	Read-Write	Data Type
DIAGNOSTICS	Fault/Alarm Info	960	**Alarm Status B** Alarm Status B Indicates the occurrence of conditions that have been configured as alarms.		RO	32-bit Integer

Options	Reserved	Reserved	Reserved	Reserved	Reserved	Reserved	Reserved	Reserved	Reserved	Reserved	Reserved	Reserved	Reserved	Reserved	Reserved	Reserved	DB Res OT	N-1 Operate (1)	PumpOff Alrm (2)	OW Alarm TO (2)	OW Level (2)	Gnd Warning	Not Home Set (3)	Homing Actv	Profile Actv (3)	PWMFrq Reduc	CurLmt Reduc	Drive OL	StartOnPwrUp	Waking	Heatsink OT	IGBT OT
Default	0	0	0	0	0	0	0	0	0	0	0	0	0	0	0	0	0	0	0	0	0	0	0	0	0	0	0	0	0	0	0	0
Bit	31	30	29	28	27	26	25	24	23	22	21	20	19	18	17	16	15	14	13	12	11	10	9	8	7	6	5	4	3	2	1	0

(1) 755 Frame 8 drives and larger only.
(2) 753 drives only.
(3) 755 drives only.

0 = Condition False
1 = Condition True

Bit 0 “IGBT OT” – Indicates the transistor (IGBT) junction temperature reached the alarm level, which is 10 °C (50 °F) below the maximum (fault level) junction temperature.

Bit 1 Heatsink OT” – Indicates the heatsink temperature reached the alarm level, which is 10 °C (50 °F) below the maximum (fault level) heatsink temperature.

Bit 2 “Waking” – The Sleep /Wake function is in the Waking condition.

Bit 3 “StartOnPwrUp” – The Start on powerup feature is active.

Bit 4 “Drive OL” – Indicates overload condition has reached the alarm level and P940 [Drive OL Count] has reached 50%.

Bit 5 “CurLmt Reduc” – Indicates the transistor (IGBT) junction temperature reached the level of current limit fold back, which is 5 °C (41 °F) below the maximum (fault level) junction temperature.

Bit 6 “PWMFrq Reduc” – Indicates the transistor (IGBT) junction temperature reached the level of PWM frequency fold back, which is 10 °C (50 °F) below the maximum (fault level) junction temperature. Or the instantaneous rising of junction temperature exceeded 60 °C (140 °F).

Bit 7 “Profile Actv” – Indicates the profile function is active, P1213 [Profile Command] Bit 12 “Prof Run Alarm” is set.

Bit 8 “Homing Actv” – Indicates the homing function is active, P731 [Homing Control] Bit 5 “Homing Alarm” is set.

Bit 9 “Not Home Set” – Indicates the profile function has executed without first executing the homing function, P1213 [Profile Command] Bit 11 “HomeNotSetAlarm” is set.

Bit 10 “Gnd Warning” – The value set in P467 [Ground Warn Lvl] has been exceeded.

Bit 11 “OW Level” – The value set in P1171 [TorqAlarm Level] has been reached.

Bit 12 “OW Alarm TO” – The value set in P1172 [TorqAlm Timeout] has been reached.

Bit 13 “PumpOff Alrm” – The pump off condition is active.

Bit 14 “N-1 Operate” – Indicates the parallel drive is in operation mode.

Bit 15 “DB Res OT” – Indicates the dynamic brake resistor has exceeded its maximum operating temperature.

File	Group	No.	Display Name Full Name Description	Values	Read-Write	Data Type
DIAGNOSTICS	Fault/Alarm Info	961	**Type 2 Alarms** Type 2 Alarms Indicates the occurrence of conditions that have been configured as alarms.		RO	32-bit Integer

Options	Reserved	Reserved	Reserved	Reserved	Reserved	Reserved	Reserved	Reserved	Reserved	Reserved	Reserved	Reserved	Reserved	PM FS Cflct	DL Cflct	PM Off Cflct	Prchrg Open	BipolarCflct (1)	IXOVoltRange	FluxAmpsRang	IRVltg Range	DigIn Cfg C	DigIn Cfg B	AltOpenLoop (1)	PriOpenLoop (1)	VHz Incmpble	VHzBoostLmt	VHzNegSlope	Frq Cflct	TrqProvCflct (2)	BrakeSlipped (2)	Sleep Cfg
Default	0	0	0	0	0	0	0	0	0	0	0	0	0	0	0	0	0	0	0	0	0	0	0	0	0	0	0	0	0	0	0	0
Bit	31	30	29	28	27	26	25	24	23	22	21	20	19	18	17	16	15	14	13	12	11	10	9	8	7	6	5	4	3	2	1	0

(1) 753 drives only.
(2) 755 drives only.

0 = Condition False
1 = Condition True

Bit 0 “Sleep Cfg” – The Sleep/Wake function is not configured properly. Refer to P350 [Sleep Wake Mode] for conditions required to start drive.

Bit 1 “BrakeSlipped” – The Torque Prove function encountered a Brake Slip condition.

Bit 2 “TrqProvCflct” – The Torque Prove function is not configured properly. Feedback device must be setup to fault if loss is detected and to use dual channel, differential type encoder if encoder feedback is selected. For encoderless operation, read the Attention statement under Lifting/Torque Proving on page 372.

Bit 3 “Frq Cflct” – Volts per Hz is not setup properly.

Bit 4 “VHzNegSlope” –

Bit 5 “VHzBoostLmt” –

Bit 6 “VHz Incmpble” –

Bit 7 “PriOpenLoop” – When set, indicates an invalid configuration has been selected and the drive will not be allowed to start. A Flux Vector control mode with Permanent Magnet motor type has been selected, but the primary feedback selection is Open Loop. For the PF753 drive, a feedback device must be used for PM flux vector control. For the PF755 drive, Flux Vector Open Loop control of PM motors is allowed.

Bit 8 “AltOpenLoop” – When set, indicates an invalid configuration has been selected and the drive will not be allowed to start. A Flux Vector control mode with Permanent Magnet motor type has been selected, but the alternate feedback selection is Open Loop and the automatic tach loss switchover option is selected. For the PF753 drive, a feedback device must be used for PM flux vector control.

Bit 9 “DigIn Cfg B” – Certain digital input functions are not allowed to be configured at the same time. For example, if you have a Run digital input configured, a Start digital input is not allowed to be configured.

Bit 10 “DigIn Cfg C” – Multiple digital input functions configured to the same physical input is not allowed.

Bit 11 “IRVltg Range” – P73 [IR Voltage Drop] is out of range.

Bit 12 “FluxAmpsRang” – P75 [Flux Current Ref] is out of range.

Bit 13 “IXOVoltRange” – P74 [Ixo Voltage Drop] is out of range.

Bit 14 “BipolarCflct” –

Bit 15 “Prchrg Open” – Precharge relay is open.

Bit 16 “PM Off Cflct” – P80 [PM Cfg] Bit 0 “AutoOfstTest” and Bit 2 “StaticTestEn” cannot be set at the same time.

Bit 17 “DL Cflct” – There is a Datalink conflict.

Bit 18 “PM FS Cflct” – There is a permanent magnet motor, flying start conflict. A flying start sweep cannot be configured with a permanent magnet motor.

File	Group	No.	Display Name Full Name Description	Values	Read-Write	Data Type
DIAGNOSTICS	Fault/Alarm Info	962	**AlarmA at Fault** Alarm A at Fault		RO	32-bit Integer

Captures and displays P959 [Alarm Status A] at the time of the last fault.

For some alarms, the value captured in this parameter may not match peak/low at time of fault due to data latency.

For details on alarms and faults, refer to Chapter 6.

Options	Reserved	Reserved	Reserved	Reserved	Reserved	Reserved	Reserved	Reserved	Reserved	Reserved	Reserved	Reserved	Reserved	Reserved	Reserved	Reserved	Task Overrun	Gnd Warning	Reserved	PosFdbkLoss	AuxFdbkLoss	AltFdbkLoss	PriFdbkLoss	Shear Pin 2	Shear Pin 1	Decel Inhib	OutPhaseLoss	InPhaseLoss	Load Loss	Motor OL	UnderVoltage	Power Loss
Default	0	0	0	0	0	0	0	0	0	0	0	0	0	0	0	0	0	0	0	0	0	0	0	0	0	0	0	0	0	0	0	0
Bit	31	30	29	28	27	26	25	24	23	22	21	20	19	18	17	16	15	14	13	12	11	10	9	8	7	6	5	4	3	2	1	0

0 = Condition False
1 = Condition True

Bit 0 "Power Loss" – A Power Loss exception has been issued.

Bit 1 "UnderVoltage" – An Under Voltage exception has been issued.

Bit 2 "Motor OL" – An excessive motor load exists.

Bit 4 "InPhaseLoss" – Input Phase Loss exception has been issued.

Bit 5 "OutPhaseLoss" – Output Phase Loss exception has been issued.

Bit 6 "Decel Inhib" – The drive is being Inhibited from decelerating to the commanded speed.

Bit 7 "Shear Pin 1" – Value set in P436 [Shear Pin1 Level] has been exceeded.

Bit 8 "Shear Pin 2" – Value set in P439 [Shear Pin2 Level] has been exceeded.

Bit 9 "PriFdbkLoss" – When set, indicates that the device selected as the primary velocity feedback source has reported a device failure. P125 [Pri Vel Fdbk Sel] selects the device used as the primary velocity feedback source. The primary feedback device supplies motor speed feedback if the Automatic Tach Switchover option is either disabled or has not switched to the alternate feedback device. In order to report this condition as an alarm, the feedback loss configuration parameter for the primary feedback device must be configured for "Alarm."

Bit 10 "AltFdbkLoss" – When set, indicates that the device selected as the alternate velocity feedback source has reported a device failure. P128 [Alt Vel Fdbk Sel] selects the device used as the alternate velocity feedback source. The alternate feedback device supplies motor speed feedback if the Automatic Tach Switchover option is enabled and the primary feedback device has failed. In order to report this condition as an alarm, the feedback loss configuration parameter for the alternate feedback device must be configured for "Alarm."

Bit 11 "AuxFdbkLoss" – When set, indicates that the device selected as the auxiliary velocity feedback source has reported a device failure. P132 [Aux Vel Fdbk Sel] selects the device used as the auxiliary velocity feedback source. The auxiliary feedback device can be used to supply motor speed reference. In order to report this condition as an alarm, the feedback loss configuration parameter for the auxiliary feedback device must be configured for "Alarm."

Bit 12 "PosFdbkLoss" – When set, indicates that the device selected as the position feedback source has reported a device failure. P135 [Psn Fdbk Sel] selects the device used as the position feedback source. Position feedback is used for position control applications. It can be the same device used for velocity feedback or position feedback can be supplied by a separate device. In order to report this condition as an alarm, the feedback loss configuration parameter for the position feedback device must be configured for "Alarm."

Bit 14 "GndWarning" – Value set in P467 [Ground Warn Lvl] has been exceeded.

Bit 15 "Task Overrun" – System resource utilization has been exceeded. See System Resource Allocation on page 318 for details.

		963	**AlarmB at Fault** Alarm B at Fault		RO	32-bit Integer

Captures and displays P960 [Alarm Status B] at the time of the last fault.

See parameter 960 [Alarm Status B] for bit descriptions.

For some alarms, the value captured in this parameter may not match peak/low at time of fault due to data latency.

For details on alarms and faults, refer to Chapter 6.

Options	Reserved	Reserved	Reserved	Reserved	Reserved	Reserved	Reserved	Reserved	Reserved	Reserved	Reserved	Reserved	Reserved	Reserved	Reserved	Reserved	DB Res OT	N-1 Operate	PumpOff Alrm	OW Alarm TO	OW Level	Gnd Warning	Not Home Set	Homing Actv	Profile Actv (1)	PWMFrq Reduc	CurLmt Reduc	Drive OL	StartOnPwrUp	Waking	Heatsink OT	IGBT OT
Default	0	0	0	0	0	0	0	0	0	0	0	0	0	0	0	0	0	0	0	0	0	0	0	0	0	0	0	0	0	0	0	0
Bit	31	30	29	28	27	26	25	24	23	22	21	20	19	18	17	16	15	14	13	12	11	10	9	8	7	6	5	4	3	2	1	0

(1) 755 drives only.

0 = Condition False
1 = Condition True

File	Group	No.	Display Name Full Name Description	Values		Read-Write	Data Type
DIAGNOSTICS	Fault/Alarm Info	964	753 **CRC Flt Cfg** CRC Fault Configuration Allows the user to configure exception 917 [FPGA CRC Failure] and change the default state. Ignore (0) – No action is taken. Alarm (1) – Type 1 alarm indicated. Flt Minor (2) – Minor fault indicated. If running, drive continues to run. Enable with P950 [Minor Flt Cfg]. If not enabled, acts like a major fault. FltCoastStop (3) – Major fault indicated. Coast to Stop. Flt RampStop (4) – Major fault indicated. Ramp to Stop. Flt CL Stop (5) – Major fault indicated. Current Limit Stop. FltNonReset (6) – Major fault indicated. Cycle power to clear this fault.	Default: Options:	6 - FltNonReset 0 - Ignore 1 - Alarm 2 - Fit Minor 3 - FltCoastStop 4 - Flt RampStop 5 - Flt CL Stop 6 - FltNonReset	RW	32-bit Integer

File	Group	No.	Display Name Full Name Description	Values		Read-Write	Data Type
DIAGNOSTICS	Testpoints	970 974 978 982	**Testpoint Sel 1** **Testpoint Sel 2** **Testpoint Sel 3** **Testpoint Sel 4** Testpoint Select *n* Selects a source for the testpoint values ("Fval" and "Lval"). Used by the factory, typically for diagnostic purposes.	Default: Min/Max:	0 –2147483648 / 2147483647	RW	32-bit Integer
		971 975 979 983	**Testpoint Fval 1** **Testpoint Fval 2** **Testpoint Fval 3** **Testpoint Fval 4** Testpoint Float Value *n* Displays data selected by [Testpoint Sel *n*], if the data type is floating point.	Default: Min/Max:	0.000000 –/+ 220000000.000000	RW	Real
		972 976 980 984	**Testpoint Lval 1** **Testpoint Lval 2** **Testpoint Lval 3** **Testpoint Lval 4** Testpoint Long Value *n* Displays data selected by [Testpoint Sel *n*], if the data type is long integer.	Default: Min/Max:	0 –2147483648 / 2147483647	RW	32-bit Integer

File	Group	No.	Display Name Full Name Description	Values		Read-Write	Data Type
DIAGNOSTICS	Peak Detection	1035	755 **PkDtct Stpt Real** Peak Detection Setpoint Real A setpoint value, in the form of a real number. Intended to be used as a potential data source for P1038 [PkDtct1PresetSel] and P1043 [PkDtct2PresetSel].	Default: Min/Max:	0.000000 –/+ 220000000.000000	RW	Real
		1036	755 **PkDtct Stpt DInt** Peak Detection Setpoint D Integer A setpoint value, in the form of an integer number. Intended to be used as a potential data source for P1038 [PkDtct1PresetSel] and P1043 [PkDtct2PresetSel].	Default: Min/Max:	0 –2147483648 / 2147483647	RW	32-bit Integer
		1037	755 **PkDtct1 In Sel** Peak Detection 1 Input Select Selects the input data source for the peak detect functions. The functions can be configured to sample and hold either the largest (maximum) or smallest (minimum) value of the input signal selected by this parameter. **Important**: Either real or integer data sources can be selected, but integer sources will be internally converted to real and displayed in the peak detect output as real numbers.	Default: Min/Max:	1035 0 / 15999931	RW	32-bit Integer
		1038	755 **PkDtct1PresetSel** Peak Detection 1 Preset Select Selects the preset data source for the peak detect functions. The output of the each peak detect function can be forced to equal the value of the input signal selected by this parameter by using the"Peak1 Set" bit in P1039 [Peak1 Cfg]. The same integer to real number conversion applies to both the input and the preset signal.	Default: Min/Max:	0 0 / 15999931	RW	32-bit Integer

File	Group	No.	Display Name Full Name Description	Values	Read-Write	Data Type
DIAGNOSTICS	Peak Detection	1039	755 **Peak1 Cfg** Peak 1 Configure Configures operation of each peak detector. Options: Reserved (bits 15–3), Peak1 Set (bit 2), Peak1 Hold (bit 1), Peak1 Peak (bit 0) Default: 0 0 0 0 0 0 0 0 0 0 0 0 0 0 0 0 Bit: 15 14 13 12 11 10 9 8 7 6 5 4 3 2 1 0 Bit 0 "Peak1 Peak" – 0 = Capture minimum value of the input signal. 1 = Capture maximum value of the input signal. Bit 1 "Peak1 Hold" – 0 = Monitor input. 1 = Ignore input and hold output at present value. This bit is overridden by Bit 2. Bit 2 "Peak1 Set" – 0 = Resume normal capture of the input signal value (assuming Bit 1 is also = 0). The preset signal will be used as a starting value to compare against further changes in the input signal level. 1 = Force output of the peak detect function to equal the signal selected by [PkDtct*n*PresetSel].		RW	16-bit Integer
		1040	755 **Peak 1 Change** Peak 1 Change Status of the peak detectors. Options: Reserved (bits 15–1), Peak1Change (bit 0) Default: 0 0 0 0 0 0 0 0 0 0 0 0 0 0 0 0 Bit: 15 14 13 12 11 10 9 8 7 6 5 4 3 2 1 0 0 = Output value is held or set. 1 = Output value has changed.		RO	16-bit Integer
		1041	755 **PeakDetect1 Out** Peak Detection 1 Output Displays the output of the peak detector, according to the operation selected by the configuration bits, and is always displayed as a real number, regardless of the selected signal type.	Default: 0.000000 Min/Max: –/+2147483648.000000	RO	Real
		1042	755 **PkDtct2 In Sel** Peak Detection 2 Input Select Selects the input data source for the peak detect functions. The functions can be configured to sample and hold either the largest (maximum) or smallest (minimum) value of the input signal selected by this parameter. **Important**: Either real or integer data sources can be selected, but integer sources will be internally converted to real and displayed in the peak detect output as real numbers.	Default: 1035 Min/Max: 0 / 159999	RW	32-bit Integer
		1043	755 **PkDtct2PresetSel** Peak Detection 2 Preset Select Selects the preset data source for the peak detect functions. The output of the each peak detect function can be forced to equal the value of the input signal selected by this parameter by using the "Peak2 Set" bit in P1044 [Peak2 Cfg]. The same integer to real number conversion applies to both the input and the preset signal.	Default: 0 Min/Max: 0 / 159999	RW	32-bit Integer

File	Group	No.	Display Name Full Name Description	Values		Read-Write	Data Type
DIAGNOSTICS	Peak Detection	1044	755 **Peak2 Cfg** Peak 2 Configure Configures operation of each peak detector. Options: Reserved (bits 15–4), Peak2 Set (bit 2), Peak2 Hold (bit 1), Peak2 Peak (bit 0) Default: 0 0 0 0 0 0 0 0 0 0 0 0 0 0 0 0 Bit: 15 14 13 12 11 10 9 8 7 6 5 4 3 2 1 0 Bit 0 "Peak2 Peak" – 0 = Capture minimum value of the input signal. 1 = Capture maximum value of the input signal. Bit 1 "Peak2 Hold" – 0 = Monitor input. 1 = Ignore input and hold output at present value. This bit is overridden by Bit 2. Bit 2 "Peak2 Set" – 0 = Resume normal capture of the input signal value (assuming Bit 1 is also = 0). The preset signal will be used as a starting value to compare against further changes in the input signal level. 1 = Force output of the peak detect function to equal the signal selected by [PkDtct*n*PresetSel].			RW	16-bit Integer
		1045	755 **Peak 2 Change** Peak 2 Change Status of the peak detectors. Options: Reserved (bits 15–1), Peak2Change (bit 0) Default: 0 0 0 0 0 0 0 0 0 0 0 0 0 0 0 0 Bit: 15 14 13 12 11 10 9 8 7 6 5 4 3 2 1 0 0 = Output value is held or set. 1 = Output value has changed.			RO	16-bit Integer
		1046	755 **PeakDetect2 Out** Peak Detection 2 Output Displays the output of the peak detector, according to the operation selected by the configuration bits, and is always displayed as a real number, regardless of the selected signal type.	Default: Min/Max:	0.000000 –/+2147483648.000000	RO	Real

Drive (Port 0) Applications File

File	Group	No.	Display Name Full Name Description	Values	Read-Write	Data Type
APPLICATIONS	Process PID	1065	**PID Cfg** PID Configuration Main configuration of the Process PID controller.		RW	16-bit Integer

Options	Reserved	Reserved	Reserved	Reserved	Reserved	Reserved	Reserved	Reserved	Reserved	Percent Ref	Anti Windup	Stop Mode	Fdbk Sqrt	Zero Clamp	Ramp Ref	Preload Int
Default	0	0	0	0	0	0	0	0	0	0	0	0	0	0	0	0
Bit	15	14	13	12	11	10	9	8	7	6	5	4	3	2	1	0

0 = Disabled
1 = Enabled

Bit 0 "Preload Int" – Preload the PID integral term with PID Preload value.
Bit 1 "Ramp Ref" – Ramp PID Reference when first enabled.
Bit 2 "Zero Clamp" – Clamp PID output to zero when P1079 [PID Output Sel] is set to option 2 "Speed Trim" or 4 "Torque Trim."
Bit 3 "Fdbk Sqrt" – Apply Square root function to the Feedback signal.
Bit 4 "Stop Mode" – When P1079 [PID Output Sel] is set to option 2 "Speed Trim," PID remains active during stopping maneuver.
Bit 5 "Anti Windup" – Prevents PID integrator from getting too far ahead of frequency ramp.
Bit 6 "Percent Ref" – When P1079 [PID Output Sel] is set to option 2 "Speed Trim," PID output is a percentage of the Speed Reference versus a percentage of P27 [Motor NP Hertz].

		1066	**PID Control** PID Control Used for dynamically controlling the Process PID controller.		RW	16-bit Integer

Options	Reserved	Reserved	Reserved	Reserved	Reserved	Reserved	Reserved	Reserved	Reserved	Reserved	Reserved	Reserved	PID InvError	PID Reset	PID Hold	PID Enable
Default	0	0	0	0	0	0	0	0	0	0	0	0	0	0	0	0
Bit	15	14	13	12	11	10	9	8	7	6	5	4	3	2	1	0

0 = Condition False
1 = Condition True

Bit 0 "PID Enable" – PID controller is enabled.
Bit 1 "PID Hold" – Hold PID integrator.
Bit 2 "PID Reset" – Reset PID integrator.
Bit 3 "PID InvError" – Invert PID error.

		1067	**PID Ref Sel** PID Reference Select Selects the source for the PID reference.	Default: Min/Max:	1070 1 / 159999	RW	32-bit Integer

File	Group	No.	Display Name Full Name Description	Values		Read-Write	Data Type
		1068	**PID Ref AnlgHi** PID Reference Analog High When an analog input is selected for the PID reference this parameter sets the high value of scaling. For example, if referencing a 0-10 V value which represents an engineering unit such as base motor speed or PSI, then this value equals 100%, the high value, of the referenced value.	Units: Default: Min/Max:	% 100.00 –/+100.00	RW	Real
		1069	**PID Ref AnlgLo** PID Reference Analog Low When an analog input is selected for PID reference this sets the low value of scaling. For example, if referencing a 0-10 V value which represents an engineering unit such as base motor speed or PSI, then this value equals 0%, the low value, of the referenced value.	Units: Default: Min/Max:	% 0.00 –/+100.00	RW	Real
		1070	**PID Setpoint** PID Setpoint Provides an internal fixed value for PID reference when P1067 [PID Ref Sel] is set to this parameter. A value of 100% is equal to the highest referenced value.	Units: Default: Min/Max:	% 0.00 –/+100.00	RW	Real
		1071	**PID Ref Mult** PID Reference Multiplier Sets the multiplying factor which is applied to the Reference source before the Reference is used. A value of 100% is equal to the lowest referenced value.	Units: Default: Min/Max:	% 100.00 –/+100.00	RW	Real
APPLICATIONS	Process PID	**1072**	**PID Fdbk Sel** PID Feedback Select Selects the source for the PID Feedback.	Default: Min/Max:	1077 1 / 159999	RW	32-bit Integer
		1073	**PID Fdbk AnlgHi** PID Feedback Analog High When an analog input is selected for PID Feedback this sets high value of scaling. A value of 100% is equal to the highest level of the referenced value.	Units: Default: Min/Max:	% 100.00 –/+100.00	RW	Real
		1074	**PID Fdbk AnlgLo** PID Feedback Analog Low When an analog input is selected for PID Feedback this sets low value of scaling. A value of 100% is equal to the lowest level of the referenced value.	Units: Default: Min/Max:	% 0.00 –/+100.00	RW	Real
		1075	**PID FBLoss SpSel** PID Feedback Loss Speed Select When an analog input is selected for PID Feedback, P1079 [PID Output Sel] is set to Speed Excl/Speed Trim, and an analog signal loss is detected, sets speed to this source. Analog signal loss occurs when the signal falls below 2V (0…10V signal) or below 4 mA (4…20 mA signal).	Default: Min/Max:	546 0 / 159999	RW	32-bit Integer
		1076	**PID FBLoss TqSel** PID Feedback Loss Torque Select When an analog input is selected for PID Feedback, P1079 [PID Output Sel] is set to option 1 “Speed Excl,” 2 “Speed Trim,” 3 “Torque Excl,” or 4 “Torque Trim” and an analog signal loss is detected, sets torque to this source.	Default: Min/Max:	676 0 / 159999	RW	32-bit Integer
		1077	**PID Fdbk** PID Feedback Provides an internal fixed value for PID Feedback when P1072 [PID Fdbk Sel] is set to this parameter. A value of 100% is equal to motor base speed.	Units: Default: Min/Max:	% 0.00 –/+100.00	RW	Real
		1078	**PID Fdbk Mult** PID Feedback Multiplier Sets the multiplying factor which is applied to the Feedback source before the Feedback is used.	Units: Default: Min/Max:	% 100.00 –/+100.00	RW	Real

File	Group	No.	Display Name Full Name Description	Values		Read-Write	Data Type
APPLICATIONS	Process PID	**1079**	**PID Output Sel** PID Output Select Selects the target for the PID Output. "Not Used" (0) – PID output is not applied to any speed reference. "Speed Excl" (1) – PID output is only reference applied to speed reference. "Speed Trim" (2) – PID output is applied to speed reference as a trim value. "Torque Excl" (3) – PID output is only reference applied to torque reference. "Torque Trim" (4) – PID output is applied to torque reference as a trim value. "Volt Excl" (5) – PID output is only reference applied to voltage reference. "Volt Trim" (6) – PID output is applied to voltage reference as a trim value.	Default: Options:	2 = "Speed Trim" 0 = "Not Used" 1 = "Speed Excl" 2 = "Speed Trim" 3 = "Torque Excl" 4 = "Torque Trim" 5 = "Volt Excl" 6 = "Volt Trim"	RW	32-bit Integer
		1080	**PID Output Mult** PID Output Multiplier Sets the multiplying factor which is applied to the PID Output before the PID Output is used. A value of 100% is equal to motor base speed.	Units: Default: Min/Max:	% 100.00000 –/+100.00000	RW	Real
		1081	**PID Upper Limit** PID Upper Limit Sets the upper limit for the P1093 [PID Output Meter]. A value of 100% is equal to motor base speed.	Units: Default: Min/Max:	% 100.00 –/+800.00	RW	Real
		1082	**PID Lower Limit** PID Lower Limit Sets the lower limit for the P1093 [PID Output Meter]. A value of 100% is equal to motor base speed.	Units: Default: Min/Max:	% –100.00 –/+800.00	RW	Real
		1083	**PID Deadband** PID Deadband Determines the error (+/-) which will be ignored. Any error which falls within this band will not change the PID output. A value of 100% is equal to motor base speed.	Units: Default: Min/Max:	% 0.00 0.00 / 100.00	RW	Real
		1084	**PID LP Filter BW** PID Low Pass Filter Bandwidth Sets the level of filtering applied to the error signal. Zero will disable this filter.	Units: Default: Min/Max:	R/S 0.00 0.00 / 100.00	RW	Real
		1085	**PID Preload** PID Preload Sets the value used to preload PID Integrator when PID is enabled and P1065 [PID Cfg] Bit 0 "Preload Int" is set to 1. A value of 100% is equal to motor base speed.	Units: Default: Min/Max:	% 0.00 –/+100.00	RW	Real
		1086	**PID Prop Gain** PID Proportional Gain Sets the value for the PID proportional component. PID ErrorMeter x PID Prop Gain = PID Output	Default: Min/Max:	1.00 0.00 / 100.00	RW	Real
		1087	**PID Int Time** PID Integral Time Time required for the integral component to reach 100% of P1092 [PID Error Meter]. Not used when P1066 [PID Control] Bit 1 "PID Hold" = 1 (enabled).	Units: Default: Min/Max:	Secs 1.00 0.00 / 100.00	RW	Real
		1088	**PID Deriv Time** PID Derivative Time Refer to formula below: $PID_{Out} = KD\ (Sec) \times \frac{d_{PI\ Error}(\%)}{d_t\ (Sec)}$ KD = P1088 $d_{PI\ Error}$ = Error - Last Error d_t = Interrupt Time A setting of zero disables this parameter.	Units: Default: Min/Max:	Secs 0.00 0.00 / 100.00	RW	Real

<table>
<tr><th>File</th><th>Group</th><th>No.</th><th>Display Name
Full Name
Description</th><th>Values</th><th>Read-Write</th><th>Data Type</th></tr>
<tr><td rowspan="5">APPLICATIONS</td><td rowspan="5">Process PID</td><td>1089</td><td>PID Status
PID Status
Status of the Process PI regulator.
<table><tr><td>Options</td><td>Reserved</td><td>Reserved</td><td>Reserved</td><td>Reserved</td><td>Reserved</td><td>Reserved</td><td>Reserved</td><td>Reserved</td><td>Reserved</td><td>Reserved</td><td>Reserved</td><td>Reserved</td><td>PID In Limit</td><td>PID Reset</td><td>PID Hold</td><td>PID Enabled</td></tr><tr><td>Default</td><td>0</td><td>0</td><td>0</td><td>0</td><td>0</td><td>0</td><td>0</td><td>0</td><td>0</td><td>0</td><td>0</td><td>0</td><td>0</td><td>0</td><td>0</td><td>0</td></tr><tr><td>Bit</td><td>15</td><td>14</td><td>13</td><td>12</td><td>11</td><td>10</td><td>9</td><td>8</td><td>7</td><td>6</td><td>5</td><td>4</td><td>3</td><td>2</td><td>1</td><td>0</td></tr></table>0 = Condition False
1 = Condition True
Bit 0 “PID Enable” – PID controller is enabled.
Bit 1 “PID Hold” – Hold PID integrator.
Bit 2 “PID Reset” – Reset PID integrator.
Bit 3 “PID In Limit” – PID in limit.</td><td></td><td>RO</td><td>16-bit Integer</td></tr>
<tr><td>1090</td><td>PID Ref Meter
PID Reference Meter
Present value of the PI reference signal. A value of 100% is equal to motor base speed.</td><td>Units:
Default:
Min/Max:</td><td>%
0.00
–/+100.00</td><td>RO</td><td>Real</td></tr>
<tr><td>1091</td><td>PID Fdbk Meter
PID Feedback Meter
Present value of the PI feedback signal. A value of 100% is equal to motor base speed.</td><td>Units:
Default:
Min/Max:</td><td>%
0.00
–/+100.00</td><td>RO</td><td>Real</td></tr>
<tr><td>1092</td><td>PID Error Meter
PID Error Meter
Present value of the PI error. A value of 100% is equal to motor base speed.</td><td>Units:
Default:
Min/Max:</td><td>%
0.00
–/+200.00</td><td>RO</td><td>Real</td></tr>
<tr><td>1093</td><td>PID Output Meter
PID Output Meter
Present value of the PI output. A value of 100% is equal to motor base speed.</td><td>Units:
Default:
Min/Max:</td><td>%
0.00
–/+800.00</td><td>RO</td><td>Real</td></tr>
</table>

File	Group	No.	Display Name Full Name Description	Values	Read-Write	Data Type
APPLICATIONS	Torque Prove	1100	755 **Trq Prove Cfg** Torque Prove Configure		RW	16-bit Integer

Enables/disables torque/brake proving function. When "Enabled," brake control comes from a digital output relay that is set to select Port 0, P1103 [Trq Prove Status] Bit 4 "Brake Set." See PowerFlex 755 Lifting/Torque Proving on page 456 and, PowerFlex 750-Series AC Drives Reference Manual, publication 750-RM002, for examples on how to use Torque Prove with PowerFlex 755 drives.

Options	Reserved	Reserved	Reserved	Reserved	Reserved	BrkSlpFltCfg	BkSlp SpdLmt	Fast Stop Bk	Test Brake	BrkSlipStart	BrkSlipEncls	FW LoadLimit	Preload	Micro Psn	Encoderless	TP Enable
Default	0	0	0	0	0	0	0	0	0	0	0	0	0	0	0	0
Bit	15	14	13	12	11	10	9	8	7	6	5	4	3	2	1	0

0 = Disabled
1 = Enabled

Bit 0 "TP Enable" – Enables TorqProve functions.
Bit 1 "Encoderless" – Enables encoderless operation – Bit 0 must also be enabled. Read the Attention statement under Lifting/Torque Proving on page 372.
Bit 2 "Micro Psn" – Enables the Micro Position digital input to change the speed command by the value set in P1112 [MicroPsnScalePct] while the drive is running.
Bit 3 "Preload" – "0" uses the last torque for preload. "1" uses P676 [Trq Ref A Stpt] if commanded direction is forward and P681 [Trq Ref B Stpt] for reverse.
Bit 4 "FW LoadLimit" – Enables drive to perform load calculation at base speed. Drive will then limit operation above base speed depending on load. "FWLoadLimit" = "Field Weakening Load Limit"
Bit 5 "BrkSlipEncls" – A "1" Disables the partial Brake Slip routine from the drive when encoderless is selected.
Bit 6 "BrkSlipStart" – Starts drive if Brake slippage is detected. Drive does not start if P933 [Start Inhibits] exists.
Bit 7 "Test Brake" – Tests the brake at Start. Torque is applied against the brake while movement is monitored.
Bit 8 "Fast Stop Bk" – Brake is set immediately upon receiving a Fast Stop input vs. setting the brake after the ramp.
Bit 9 "BkSlp SpdLmt" – When a brake slip condition is detected, the load is lowered at a fixed speed (Preset Speed 1).
Bit 10 "BrkSlpFltCfg" – When set, the brake slip fault does not occur if the Enable input or Safety Enable input is low.
When cleared, the brake slip fault occurs regardless of the state of the Enable input or Safety Enable input. This is the behavior of the existing function.

APPLICATIONS	Torque Prove	1101	755 **Trq Prove Setup** Torque Prove Setup		RW	16-bit Integer

Allows control of specific torque proving functions through a communication device.

Options	Reserved	Reserved	Reserved	Reserved	Reserved	Reserved	Reserved	Reserved	NHdwrOvrTrvl	PHdwrOvrTrvl	End Stop Rev	Decel Rev	End Stop Fwd	Decel Fwd	Float Micro	Fast Stop
Default	0	0	0	0	0	0	0	0	0	0	0	0	0	0	0	0
Bit	15	14	13	12	11	10	9	8	7	6	5	4	3	2	1	0

0 = Disabled
1 = Enabled

Bit 0 "Fast Stop" – Forces a current limit stop.
Bit 1 "Float Micro" – Activates the micro position function when selected and running. Activates float when stopping.
Bit 2 "Decel Fwd" – Forces decel forward travel limit.
Bit 3 "End Stop Fwd" – Forces end forward travel limit.
Bit 4 "Decel Rev" – Forces decel reverse travel limit.
Bit 5 "End Stop Rev" – Forces end reverse travel limit.
Bit 6 "PHdwrOvrTrvl" – Positive Hardware Over Travel limit: Setting this bit creates a Coast to Stop fault.
Bit 7 "NHdwrOvrTrvl" – Negative Hardware Over Travel limit: Setting this bit creates a Coast to Stop fault.

File	Group	No.	Display Name Full Name Description	Values		Read-Write	Data Type
APPLICATIONS	Torque Prove	1102	755 **DI FloatMicroPsn** Digital Input Float Micro Position Selects the digital input to be used for the float and micro position functions. Activates the micro position function when selected and running. Activates float when stopping.	Default: Min/Max:	0.00 0.00 / 159999.15	RW	32-bit Integer
		1103	755 **Trq Prove Status** Torque Prove Status Displays the status bits for TorqProve. Options: Reserved, Reserved, Reserved, Reserved, Reserved, Reserved, Reserved, BrakeRelease, Encoderless, RefLoadLmted, LoadTestActv, Brake Set, BrkSlip1 Alm, Micro Psn, DecelLmtActv, EndLimitActv Default: 0 0 0 0 0 0 0 0 0 0 0 0 0 0 0 0 Bit: 15 14 13 12 11 10 9 8 7 6 5 4 3 2 1 0 0 = Disabled 1 = Enabled Bit 0 "EndLimitActv" – End travel limit active. Bit 1 "DecelLmtActv" – Decel travel limit active. Bit 2 "Micro Psn" – Micro position active. Bit 3 "BrkSlip1 Alm" – Brake slip detected. Bit 4 "Brake Set" – Brake signal set. For example set P10 [RO0 Sel] on the digital I/O module to Port 0, P1103 Bit 4 and set P6 [Dig Out Invert] Bit 0 = 1. Bit 5 "LoadTestActv" – The test used to check the load for above base speed operation is active. Bit 6 "RefLoadLmted" – The reference is limited due to the load test results. Bit 7 "Encoderless" – Encoderless configure fault is active. Bit 8 "BrakeRelease" – Inverted state of P1103 Bit 4.			RO	16-bit Integer
		1104	755 **Trq Lmt SlewRate** Torque Limit Slew Rate Sets the rate to ramp the torque limits to zero during brake proving.	Units: Default: Min/Max:	Secs 10.000 0.500 / 300.000	RW	Real
		1105	755 **Speed Dev Band** Speed Deviation Band The amount of allowable deviation between the commanded speed and the actual speed (from a feedback device). When this value is exceeded for the amount of time in P1106 [SpdBand Intgrtr], a fault will occur.	Units: Default: Min/Max:	Hz RPM P27 [Motor NP Hertz] x 0.0334 P28 [Motor NP RPM] x 0.0334 P27 x 0.0016 / P27 x 0.25 P28 x 0.0016 / P28 x 0.25	RW	Real
		1106	755 **SpdBand Intgrtr** Speed Band Integrator The amount of time for which the actual speed is allowed to deviate from P1105 [Speed Dev Band] before a fault occurs.	Units: Default: Min/Max:	Secs 0.060 0.001 / 0.200	RW	Real
		1107	755 **Brk Release Time** Brake Release Time With an encoder, this parameter sets the time between the brake release command and when the drive begins to accelerate. Without an encoder, this parameter sets the time to release the brake after drive starts.	Units: Default: Min/Max:	Secs 0.100 0.000 / 10.000	RW	Real
		1108	755 **Brk Set Time** Brake Set Time Defines the amount of delay time between commanding the brake to be set and the start of brake proving.	Units: Default: Min/Max:	Secs 0.100 0.000 / 10.000	RW	Real
		1109	755 **Brk Alarm Travel** Brake Alarm Travel Sets the number of motor shaft revolutions allowed during the brake slippage test. Drive torque is reduced to check for brake slippage. When slippage occurs, the drive allows this number of motor shaft revolutions before regaining control. Not used when P1100 [Trq Prove Cfg] Bit 1 "Encoderless" = 1 (enabled).	Default: Min/Max:	1.00 0.00 / 1000.00	RW	Real

File	Group	No.	Display Name Full Name Description	Values		Read-Write	Data Type
APPLICATIONS	Torque Prove	1110	755 **Brk Slip Count** Brake Slip Count Sets the number of encoder counts to define a brake slippage condition and is based on the feedback device attached to P135 [Position Feedback]. Not used when P1100 [Trq Prove Cfg] Bit 1 "Encoderless" = 1 (enabled).	Default: Min/Max:	250.00 0.00 / 2147480000	RW	Real
		1111	755 **Float Tolerance** Float Tolerance Sets the frequency or speed level where the float timer starts. Also sets the frequency or speed level where the brake will be closed when P1100 [Trq Prove Cfg] Bit 1 "Encoderless" = 1 (enabled).	Units: Default: Min/Max:	Hz RPM P27 [Motor NP Hertz] x 0.0334 P28 [Motor NP RPM] x 0.0334 P27 [Motor NP Hertz] / P27 x 0.25 P28 [Motor NP RPM] x 0.001 / P28 x 0.25	RW	Real
		1112	755 **MicroPsnScalePct** Micro Position Scale Percent Sets the percent of speed reference to be used when micropositioning has been selected in P1100 [Trq Prove Cfg]. Bit 2 of P1100 [Trq Prove Cfg], determines if the motor needs to come to a stop before this setting will take effect.	Units: Default: Min/Max:	% 10.000 0.100 / 100.000	RW	Real
		1113	755 **ZeroSpdFloatTime** Zero Speed Float Time Sets the amount of time the drive is below P1111 [Float Tolerance] before the brake is set. Not used when P1100 [Trq Prove Cfg] Bit 1 "Encoderless" = 1 (enabled).	Units: Default: Min/Max:	Secs 5.000 0.100 / 500.000	RW	Real
		1114	755 **Brake Test Torq** Brake Test Torque Sets the percent of torque applied to the motor before the brake is released when P1100 [Trq Prove Cfg] bit 7 "Test Brake" is enabled.	Units: Default: Min/Max:	% 50.0 -150 / +150.0	RW	Real

File	Group	No.	Display Name Full Name Description	Values	Read-Write	Data Type
APPLICATIONS	Fibers Function	1120	**Fiber Control** Fiber Control Controls the Sync and Traverse Fiber Application functions.		RW	16-bit Integer

Options	Reserved	Reserved	Reserved	Reserved	Reserved	Reserved	Reserved	Reserved	Reserved	Reserved	Reserved	Reserved	Reserved	Reserved	Traverse Ena	Sync Enable
Default	0	0	0	0	0	0	0	0	0	0	0	0	0	0	0	0
Bit	15	14	13	12	11	10	9	8	7	6	5	4	3	2	1	0

0 = Disabled
1 = Enabled

Bit 0 "Sync Enable" – Used in combination with an optional digital input to begin Synchronous speed change upon the falling edge of enable.
Bit 1 "Traverse Ena" – Used in combination with an optional digital input to enable/disable the speed traverse routine.

		1121	**Fiber Status** Fiber Status Status of Sync and Traverse functions.		RO	16-bit Integer

Options	Reserved	Reserved	Reserved	Reserved	Reserved	Reserved	Reserved	Reserved	Reserved	Reserved	Reserved	Reserved	Traverse Dec	Traverse On	Sync Ramp	Sync Hold
Default	0	0	0	0	0	0	0	0	0	0	0	0	0	0	0	0
Bit	15	14	13	12	11	10	9	8	7	6	5	4	3	2	1	0

0 = Disabled
1 = Enabled

Bit 0 "Synch Hold" – Set when the Synchronous Speed change function is holding the speed reference constant. The speed will begin ramping to its setpoint upon the falling edge of Sync Enable.
Bit 1 "Sync Ramp" – Set when the Synchronous Speed change function is ramping to its setpoint.
Bit 2 "Traverse On" – Set when the Traverse Speed function is varying the speed, either increasing or decreasing.
Bit 3 "Traverse Dec" – Set when the Traverse Speed function is decreasing the motor speed.

		1122	**Sync Time** Synchronize Time The time in seconds to ramp from the "held speed reference" to the current speed reference, after the Sync input is de-energized.	Units: Secs Default: 0.0 Min/Max: 0.0 / 3600.0	RW	Real
		1123	**Traverse Inc** Traverse Increment Sets the time period in seconds of increasing speed for the Fiber Traverse function.	Units: Secs Default: 0.00 Min/Max: 0.00 / 30.00	RW	Real
		1124	**Traverse Dec** Traverse Decrement Sets the time period in seconds of decreasing speed for the Fiber Traverse function.	Units: Secs Default: 0.00 Min/Max: 0.00 / 30.00	RW	Real
		1125	**Max Traverse** Maximum Traverse Sets the amplitude of the triangle wave speed modulation for the Fiber Traverse function. The total speed variation will be twice this value, from speed ref plus Max Traverse to speed ref minus Max Traverse.	Units: Hz RPM Default: 0.00 Min/Max: 0.00 / P520 [Max Fwd Speed]	RW	Real

File	Group	No.	Display Name Full Name Description	Values		Read-Write	Data Type
APPLICATIONS	Fibers Function	1126	**P Jump** Position Jump Sets the amplitude of the square wave speed modulation for the Fiber Traverse function. This speed is alternately added to and subtracted from the speed reference together with the P1125 [Max Traverse] triangle speed modulation.	Units: Default: Min/Max:	Hz RPM 0.00 0.00 / P520 [Max Fwd Speed]	RW	Real
		1129	**DI Fiber SyncEna** Digital Input Fiber Synchronize Enable Selects a digital input source for the Fiber Application Function's synchronous speed change routine. Used in combination with the P1120 [Fiber Control] Sync Enable bit.	Default: Min/Max:	0.00 0.00 / 159999.15	RW	32-bit Integer
		1130	**DI Fiber TravDis** Digital Input Fiber Traverse Disable Selects a digital input source for the Fiber Application Traverse Routine. This is an inverted input, so the Traverse Routine is disabled when the input is active (set). Used in combination with P1120 [Fiber Control] Bit 1 "Traverse Ena."	Default: Min/Max:	0.00 0.00 / 159999.15	RW	32-bit Integer

File	Group	No.	Display Name Full Name Description	Values		Read-Write	Data Type
APPLICATIONS	Adjustable Vltg	1131	**Adj Vltg Config** Adjustable Voltage Configuration Selects output voltage phase setting. Single-phase operation is intended for resistive loads such as heating coils. Connect single-phase loads across the U/T1 and V/T2 output terminals.			RW	16-bit Integer

Options	Reserved	Reserved	Reserved	Reserved	Reserved	Reserved	Reserved	Reserved	Reserved	Reserved	Reserved	Reserved	Reserved	Reserved	Reserved	PhaseSetting
Default	0	0	0	0	0	0	0	0	0	0	0	0	0	0	0	1
Bit	15	14	13	12	11	10	9	8	7	6	5	4	3	2	1	0

0 = 3-Phase Operation
1 = 1-Phase Operation

File	Group	No.	Display Name Full Name Description	Values		Read-Write	Data Type
		1133	**Adj Vltg Select** Adjustable Voltage Reference Select Selects the source of the voltage reference to the drive.	Default: Min/Max:	0 0 / 159999	RW	32-bit Integer
		1134	**Adj Vltg Ref Hi** Adjustable Voltage Reference High Scales the upper value of the P1133 [Adj Vltg Select] selection when the source is an analog input.	Units: Default: Min/Max:	% 0.0 0 / 100.0 of Drive Rated Volts	RW	Real
		1135	**Adj Vltg Ref Lo** Adjustable Voltage Reference Low Scales the lower value of the P1133 [Adj Vltg Select] selection when the source is an analog input.	Units: Default: Min/Max:	% 0.0 0 / 100.0 of Drive Rated Volts	RW	Real
		1136	**Adj Vltg TrimSel** Adjustable Voltage Trim Select Selects the source of the voltage trim that is added to or subtracted from the voltage reference.	Default: Min/Max:	0 0 / 159999	RW	32-bit Integer
		1137	**Adj Vltg Trim Hi** Adjustable Voltage Trim High Scales the upper value of the P1136 [Adj Vltg TrimSel] selection when the source is an analog input.	Units: Default: Min/Max:	% 0.0 0 / 100.0 of Drive Rated Volts	RW	Real
		1138	**Adj Vltg Trim Lo** Adjustable Voltage Trim Low Scales the lower value of the P1136 [Adj Vltg TrimSel] selection when the source is an analog input.	Units: Default: Min/Max:	% 0.0 0 / 100.0 of Drive Rated Volts	RW	Real

File	Group	No.	Display Name Full Name Description	Values		Read-Write	Data Type
APPLICATIONS	Adjustable Vltg	**1139**	**Adj Vltg Command** Adjustable Voltage Command Displays the voltage value of the reference specified in P1133 [Adj Vltg Select].	Units: Default: Min/Max:	V AC 0.00 0.00 / Drive Rated Volts	RO	Real
		1140	**Adj Vltg AccTime** Adjustable Voltage Acceleration Time Sets the rate of voltage increase. The value will be the time it takes to ramp the voltage from P1152 [Min Adj Voltage] to P36 [Maximum Voltage]. An "S" curve can be applied to the ramp using P1150 [Adj Volt Scurve].	Units: Default: Min/Max:	Secs 0.0 0.0 / 3600.0	RW	Real
		1141	**Adj Vltg DecTime** Adjustable Voltage Deceleration Time Sets the rate of voltage decrease. The value will be the time it takes to ramp the voltage from P36 [Maximum Voltage] to P1152 [Min Adj Voltage]. An "S" curve can be applied to the ramp using P1150 [Adj Volt Scurve]. This is an independent voltage ramp decoupled from the scalar frequency ramp P537/538 [Decel Time *n*] and controlled by user selectable acceleration and deceleration ramp times. **Important:** This ramp and P537/538 [Decel Time *n*] must ramp to zero for drive to Stop.	Units: Default: Min/Max:	Secs 0.0 0.0 / 3600.0	RW	Real
		1142 **1143** **1144** **1145** **1146** **1147** **1148**	**Adj Vltg Preset1** **Adj Vltg Preset2** **Adj Vltg Preset3** **Adj Vltg Preset4** **Adj Vltg Preset5** **Adj Vltg Preset6** **Adj Vltg Preset7** Adjustable Voltage Preset *n* Provides an internal fixed voltage command value that is available as a selection for P1133 [Adj Vltg Select].	Units: Default: Min/Max:	V AC 0.0 0.0 / Based on Drive Rating and Voltage Class	RW	Real
		1149	**Adj Vltg RefMult** Adjustable Voltage Reference Multiplier Scales the selected reference voltage by a percentage where 100% equals the reference command. If the reference command equals 100V and P1149 equals 100% then the total output voltage equals 100V + 100V = 200V.	Units: Default: Min/Max:	% 0.0 0 / 100.0 of Drive Rated Volts	RW	Real
		1150	**Adj Vltg Scurve** Adjustable Voltage S Curve Sets the percentage of acceleration time or deceleration time to be applied to the voltage ramp as "S" curve. Time is added 1/2 at the beginning and 1/2 at the end. A value of zero disables this feature.	Units: Default: Min/Max:	% 0.0 0.0 / 100.0	RW	Real
		1151	**Adj Vltg TrimPct** Adjustable Voltage Trim Percentage Scales the selected trim voltage by a percentage where 100% equals the trim voltage. If the reference command equals 100V and P1151 equals 100% then the total output voltage equals 100V + 100V = 200V. Analog In 1 and 2 are scaled separately with P1137 [Adj Vltg Trim Hi] and P1138 [Adj Vltg Trim Lo] then P1151 sets the trim value. The sign of this value will determine if trim is added or subtracted from the reference.	Units: Default: Min/Max:	% 0.0 –/+100.0 of Drive Rated Volts	RW	Real
		1152	**Min Adj Voltage** Minimum Adjustable Voltage Sets the low limit for the voltage reference when P35 [Motor Ctrl Mode] is set to 9 "Adj Voltage."	Units: Default: Min/Max:	V AC 0.0 0.0 / Drive Rated Volts	RW	Real
		1153	**Dead Time Comp** Dead Time Compensation Sets the dead time compensation value to reduce DC offsets in the output voltage from the PWM inverter for non-motor loads.	Units: Default: Min/Max:	% 100.00 0.00 / 100.00	RW	Real
		1154	**DC Offset Ctrl** DC Offset Control Used to further reduce DC offsets in the output voltage from the PWM inverter for non-motor loads. When enabled, P1153 [Dead Time Comp] is disabled.	Default: Options:	0 = "Disable" 0 = "Disable" 1 = "Enable"	RW	32-bit Integer

File	Group	No.	Display Name Full Name Description	Values		Read-Write	Data Type
APPLICATIONS	Pump Jack	**1165**	**Rod Speed** Rod Speed Displays the speed in RPM of the pump rod after the gearbox and sheaves. Rod Speed = Motor Speed x P1174 [Total Gear Ratio]	Units: Default: Min/Max:	RPM 0.00 0.00 / 10000.00	RO	Real
		1166	**Rod Torque** Rod Torque Displays the load side torque. P1174 [Total Gear Ratio] must be greater than zero to activate this display.	Units: Default: Min/Max:	FtLb 0.00 0.00 / 10000.00	RO	Real
		1167	**Rod Speed Cmd** Rod Speed Command Displays the commanded speed in RPM of the pump rod after the gearbox and sheaves.	Units: Default: Min/Max:	RPM 0.00 0.00 / 10000.00	RO	Real
		1168	**TorqAlarm Action** Torque Alarm Action Sets the drive action when the Torque Alarm is exceeded. Note: only active with PC pump applications. See P1179 [OilWell Pump Cfg].	Default: Options:	0 = "Ignore" 0 = "Ignore" 1 = "Preset Spd1"	RW	32-bit Integer
		1169	**TorqAlarm Config** Torque Alarm Configure Enables the Torque Alarm function. Options: Reserved (15) Reserved (14) Reserved (13) Reserved (12) Reserved (11) Reserved (10) Reserved (9) Reserved (8) Reserved (7) Reserved (6) Reserved (5) Reserved (4) Reserved (3) Reserved (2) Torq Lvl Low (1) Torque Level (0) Default: 0 0 0 0 0 0 0 0 0 0 0 0 0 0 0 0 Bit: 15 14 13 12 11 10 9 8 7 6 5 4 3 2 1 0 0 = Disabled 1 = Enabled Bit 0 – Torque Level Bit 1 – Torq Lvl Low			RW	16-bit Integer
		1170	**TorqAlarm Dwell** Torque Alarm Dwell Sets the time that the torque must exceed P1171 [TorqAlarm Level] before P1168 [TorqAlarm Action] takes place. Active when P1169 [TorqAlarm Config] Bit 0 "Torque Level" = 1 (enabled).	Units: Default: Min/Max:	Secs 0.0 0.0 / 60.0	RW	Real
		1171	**TorqAlarm Level** Torque Alarm Level Sets the level at which the Torque Alarm becomes active. Active when P1169 [TorqAlarm Config] Bit 0 "Torque Level" = 1 (enabled)	Units: Default: Min/Max:	FtLb 0.0 0.0 / 5000.0	RW	Real
		1172	**TorqAlm Timeout** Torque Alarm Time Out Sets the amount of time a Torque Alarm can be active until timeout action begins. Active when P1169 [TorqAlarm Config] Bit 0 "Torque Level" = 1 (enabled)	Units: Default: Min/Max:	Secs 0.0 0.0 / 600.0	RW	Real
		1173	**TorqAlarm TOActn** Torque Alarm Time Out Action Sets the drive action when P1172 [TorqAlrm Timeout] is exceeded. Active when P1169 [TorqAlarm Config] Bit 0 "Torque Level" = 1 (enabled) "Ignore" (0) – No action is taken. "Alarm" (1) – Type 1 alarm indicated. "Flt Minor" (2) – Minor fault indicated. If running, drive continues to run. Enable with P950 [Minor Flt Cfg]. If not enabled, acts like a major fault. "FltCoastStop" (3) – Major fault indicated. Coast to Stop. "Flt RampStop" (4) – Major fault indicated. Ramp to Stop. "Flt CL Stop" (5) – Major fault indicated. Current Limit Stop.	Default: Options:	0 = "Ignore" 0 = "Ignore" 1 = "Alarm" 2 = "Flt Minor" 3 = "FltCoastStop" 4 = "Flt RampStop" 5 = "Flt CL Stop" 6 = "Resume"	RW	32-bit Integer

File	Group	No.	Display Name Full Name Description	Values		Read-Write	Data Type
APPLICATIONS	Pump Jack	1174	**Total Gear Ratio** Total Gear Ratio Displays the calculated total gear ratio as follows: (P1184 [Gearbox Sheave] x P1183 [Gearbox Ratio]) / P1178 [Motor Sheave]	Default: Min/Max:	0.0 0.0 / 32000.0	RO	Real
		1175	**Max Rod Speed** Maximum Rod Speed Sets the maximum speed for the polished rod in a PCP oil well application.	Units: Default: Min/Max:	RPM 300.0 200.0 / 600.0	RW	Real
		1176	**Max Rod Torque** Maximum Rod Torque Sets the desired maximum torque on the polished rod in a PCP oil well application.	Units: Default: Min/Max:	FtLb 500.0 0.0 / 3000.0	RW	Real
		1177	**Min Rod Speed** Minimum Rod Speed Sets the minimum speed for the polished rod in a PCP oil well application.	Units: Default: Min/Max:	RPM 0.0 0.0 / 199.0	RW	Real
		1178	**Motor Sheave** Motor Sheave Sets the sheave diameter on the motor.	Units: Default: Min/Max:	Inch 10.0 0.25 / 25.00	RW	Real
		1179	**OilWell Pump Cfg** Oil Well Pump Configure Selects the type of oil well application. “Disable” (0) – Disables oil well parameters. “Pump Jack” (1) – Sets parameters based on Pump Jack type oil well. “PrgrsvCavity” (2) – Sets parameters based on Progressive Cavity type Pumps.	Default: Options:	0 = “Disable” 0 = “Disable” 1 = “Pump Jack” 2 = “PrgrsvCavity”	RW	32-bit Integer
		1180	**PCP Pump Sheave** PCP Pump Sheave Specifies the pump sheave diameter.	Units: Default: Min/Max:	Inch 20.0 0.25 / 200.00	RW	Real
		1181	**Gearbox Limit** Gearbox Limit Sets the gearbox torque limit. This value is used in determining the P670 [Pos Torque Limit] and P671 [Neg Torque Limit].	Units: Default: Min/Max:	% 100.0 0.0 / 200.0	RW	Real
		1182	**Gearbox Rating** Gearbox Rating Sets the gearbox rating.	Units: Default: Min/Max:	Kin# 640.0 16.0 / 2560.0	RW	Real
		1183	**Gearbox Ratio** Gearbox Ratio Specifies the nameplate gear ratio.	Default: Min/Max:	1.0 1.0 / 40.0	RW	Real
		1184	**Gearbox Sheave** Gearbox Sheave Sets the Sheave diameter on the Gearbox	Units: Default: Min/Max:	Inch 0.25 0.25 / 100.00	RW	Real
		1185	**TorqAlarm LoLvl** Torque Alarm Low Level Sets the level at which the Torque Low Alarm becomes active. Active when P1169 [TorqAlarm Config] Bit 1 “Torq Lvl Low” = 0 (enabled)	Units: Default: Min/Max:	FtLb 0.0 0.0/5000.0	RW	Real

File	Group	No.	Display Name Full Name Description	Values		Read-Write	Data Type
APPLICATIONS	Pump Off	1187	**Pump Off Config** Pump Off Configure Selects the torque data that will be used for the pump off control. "Automatic" (0) – Downstroke torque is used if the torque waveform synchronizes with previously saved waveform. If the position is not found after 6 cycles, the cycle torque is used. If cycle torque is used, P1191 [Pump Off Status] Bit 3 "Cycle Used" is set to 1 "Enable." "Position" (1) – Downstroke torque is used to detect a pump off condition. The torque waveform needs to be able to synchronize with the previously saved waveform. "Cycle" (2) – Full pump cycle torque is used to detect a pump off condition.	Default: Options:	0 = "Automatic" 0 = "Automatic" 1 = "Position" 2 = "Cycle"	RW	32-bit Integer
		1188	**Pump Off Setup** Pump Off Setup Select pump off options. Options: Reserved, Reserved, Reserved, Reserved, Reserved, Reserved, Reserved, Reserved, Reserved, Reserved, Reserved, Dis Baseline, Cycle PO Pos, Pos Min Trq, Pos Offset, Pos Filter Default: 0 0 0 0 0 0 0 0 0 0 0 0 0 0 0 0 Bit: 15 14 13 12 11 10 9 8 7 6 5 4 3 2 1 0 0 = Disabled 1 = Enabled Bit 0 "Pos Filter" – Sets level of filtering on torque for position calculation: 0 = Light (Default), 1 = Heavy. Used to remove extra peaks in the waveform. Bit 1 "Pos Offset" – Enables/disables correction factor for motor slip in position calculator. Set bit if torques and position count are drifting apart. Bit 2 "Pos Min Trq" – Sets the minimum torque threshold for the position detector. 0 = 10% (Default), 1 = Auto Detect Min Torque. Bit 3 "Cycle PO Pos" – Enables/disables positive level changes for Pump Off in cycle mode. Bit 4 "Dis Baseline" - Enables / disables baseline function.			RW	16-bit Integer
		1189	**Pump Off Action** Pump Off Action Selects the action to be taken after a pump off condition has been detected. "Change Speed" (0) – When a pump off condition is detected, speed is reduced by the percentage set in P1196 [Pump Off Speed] and runs for the time set in P1197 [Pump Off Time]. If condition continues, speed is reduced a second time. The pump will remain at this speed until the pump off condition no longer exists. "Always Stop" (1) – Stops pump when a pump off condition is detected. Pump will remain stopped for the time set in P355 [Wake Time]. "Stop After 1" (2) – When a pump off condition is detected, speed is reduced by the percentage set in P1196 [Pump Off Speed] and runs for the time set in P1197 [Pump Off Time]. Pump will stop if torque continues to change while at the reduced speed. Pump will remain stopped for the time set in P353 [Sleep Time]. "Stop After 2" (3) – When a pump off condition is detected, speed is reduced by the percentage set in P1196 [Pump Off Speed] and runs for the time set in P1197 [Pump Off Time]. If torque change continues, speed is reduced a second time by the same percentage. Pump will stop if torque continues to change while at the reduced speed. Pump will remain stopped for the time entered in P353 [Sleep Time].	Default: Options:	0 = "Change Speed" 0 = "Change Speed" 1 = "Always Stop" 2 = "Stop After 1" 3 = "Stop After 2"	RW	32-bit Integer
		1190	**Pump Off Control** Pump Off Control Enables/Disable the pump off control or select the source for the torque level. "Baseline Set" (1) – The control uses a torque baseline created after any start of the drive (first ten cycles). It is critical that this data is gathered from a "full" well. "Fixed Setpt" (2) – The control uses the value set in P1194 [Torque Setpoint]. Use the value in P1200 [Pct Drop Torque] as a guideline in "Automatic" or "Position" mode. In "Cycle" mode use P1198 [Pct Cycle Torque] as a guideline.	Default: Options:	0 = "Disable" 0 = "Disable" 1 = "Baseline Set" 2 = "Fixed Setpt"	RW	32-bit Integer

File	Group	No.	Display Name Full Name Description	Values	Read-Write	Data Type
APPLICATIONS	Pump Off	1191	**Pump Off Status** Pump Off Status Displays the status of the pump off control.		RO	16-bit Integer
		1192	**Pump Cycle Store** Pump Cycle Store Stores the torque waveform over the course of a pump cycle. Used to determine the downstoke when in "Automatic" or "Position" mode. With the drive running at the desired speed, set this parameter to 1 "Enable" and press Enter. Over the next few cycles, the waveform will be stored and this parameter will automatically return to 0 "Disable." If this parameter does not return to 0 "Disable" after five pump cycles, waveform variations may be excessive. Use of a fixed setpoint may be required. See the PowerFlex 750-Series AC Drives Reference Manual, publication 750-RM002, for more information on setting up the pump off feature.	Default: Options:	0 = "Disable" 0 = "Disable" 1 = "Enable"	RW	32-bit Integer
		1193	**Set Top ofStroke** Set Top of Stroke Captures the position at the top of the pump stroke cycle. With the drive running at the desired speed, set this parameter to 1 "Enable" and press Enter when the rod is at its highest position. The top of pump stroke position will be stored and this parameter will automatically return to 0 "Disable."	Default: Options:	0 = "Disable" 0 = "Disable" 1 = "Enable"	RW	32-bit Integer
		1194	**Torque Setpoint** Torque Set Point Sets the torque level for pump off when P1190 [Pump Off Control] is set to 2 "Fixed Setpt."	Units: Default: Min/Max:	% 0.00 0.00 / 100.00	RW	Real
		1195	**Pump Off Level** Pump Off Level Sets the percent change in torque from the baseline or setpoint that will indicate the well is in the pump off condition. When the pump is started it creates a baseline torque level, assuming the well is full. For example, if the baseline torque is 50% and the [Pump Off Level] is set to 10%, the drive will go into pump off when the torque drops to 45%.	Units: Default: Min/Max:	% 5.00 0.00 / 100.00	RW	Real

Options

	Reserved	Reserved	Reserved	Reserved	Reserved	Reserved	Reserved	Reserved	Reserved	Pump Stable	PumpOff Alrm	TopOf Stroke	Cycle Used	Pump Stopped	Pump Slowed	Pump OffEnbl
Default	0	0	0	0	0	0	0	0	0	0	0	0	0	0	0	0
Bit	15	14	13	12	11	10	9	8	7	6	5	4	3	2	1	0

0 = Condition False
1 = Condition True

Bit 0 "Pump OffEnbl" – Pump off control is enabled.
Bit 1 "Pump Slowed" – A pump off condition was detected and the drive is running at a reduced speed.
Bit 2 "Pump Stopped" – A pump off condition was detected and the drive stopped (sleeping).
Bit 3 "Cycle Used" – The cycle torque is used for pump off detection.
Bit 4 "TopOf Stroke" – The internal position is between 0 and 500. Top of stroke is 0.
Bit 5 "PumpOff Alrm" – A pump off condition was detected, but has not yet triggered P1189 [Pump Off Action]. This is a warning of a pending pump off condition.
Bit 6 "Pump Stable" – The pump is running at a stable speed and not calculating the baseline torque.

File	Group	No.	Display Name Full Name Description	Values		Read-Write	Data Type
APPLICATIONS	Pump Off	**1196**	**Pump Off Speed** Pump Off Speed Sets the percent drop in speed from the commanded speed during a pump off condition.	Units: Default: Min/Max:	% 20.00 0.00 / 100.00	RW	Real
		1197	**Pump Off Time** Pump Off Time Sets the time the drive will run at the reduced P1196 [Pump Off Speed] before returning to the commanded speed and checking if the pump off condition still exists.	Units: Default: Min/Max:	Secs 600.00 120.00 / 60000.00	RW	Real
		1198	**Pct Cycle Torque** Percent Cycle Torque Displays the average torque for a full pump cycle.	Units: Default: Min/Max:	% 0.00 -100.00 / 200.00	RO	Real
		1199	**Pct Lift Torque** Percent Lift Torque Displays the average rod lift torque.	Units: Default: Min/Max:	% 0.00 -100.00 / 200.00	RO	Real
		1200	**Pct Drop Torque** Percent Drop Torque Displays the average rod dropping torque.	Units: Default: Min/Max:	% 0.00 -100.00 / 200.00	RO	Real
		1201	**Stroke Pos Count** Stroke Position Count Displays the pump cycle position. The top of stroke should be 0 and rolls over at 10,000.	Default: Min/Max:	0 0 / 15000	RO	32-bit Integer
		1202	**Stroke Per Min** Stroke Per Minute Displays the strokes per minute.	Default: Min/Max:	0.00 0.00 / 50.00	RO	Real
		1203	**Pump Off Count** Pump Off Count Displays the number of times a pump off condition has occurred since this parameter was reset.	Default: Min/Max:	0.00 0.00 / 60000.00	RW	Real
		1204	**PumpOff SleepCnt** Pump Off Sleep Count Displays the number of times a sleep condition has occurred since this parameter was reset.	Default: Min/Max:	0.00 0.00 / 60000.00	RW	Real
		1205	**Day Stroke Count** Day Stroke Count Displays the number of strokes for the past 24 hours. This is a rolling counter updated every hour.	Default: Min/Max:	0.00 0.00 / 65535.00	RO	Real
		1206 	**DI PumpOff Disbl** Digital Input Pump Off Disable Selects the digital input source for the Pump Off Disable function.	Default: Min/Max:	0.00 0.00 / 159999.15	RW	32-bit Integer
		1207	**Pump OffSleepLvl** Pump Off Sleep Level Provides a source for P351 [SleepWake RefSel]. This provides the start/stop control of the drive by the pump off function.	Units: Default: Min/Max:	Volt 0.00 0.00 / 10.00	RO	Real
		1208	**DI Pump Baseline** Digital Input Pump Baseline Selects the digital input source for the Pump Baseline Disable Function.	Default: Min/Max:	0.00 0.00 / 159999.15	RW	32-bit Integer

File	Group	No.	Display Name Full Name Description	Values	Read-Write	Data Type
APPLICATIONS	Profiling	1210	755 **Profile Status** Profile Status Indicates status of speed profile/position indexer control logic.		RO	32-bit Integer

Options	Reserved	Reserved	Reserved	Reserved	Reserved	Reserved	Reserved	Reserved	Reserved	Reserved	Reserved	Reserved	Home Not Set	Vel Override	Restart Step	Resume	Stopped	Complete	In Position	Holding	Dwell	PositionMode	Running	Enabled	Reserved	Reserved	Reserved	Step Bit 4	Step Bit 3	Step Bit 2	Step Bit 1	Step Bit 0
Default	0	0	0	0	0	0	0	0	0	0	0	0	0	0	0	0	0	0	0	0	0	0	0	0	0	0	0	0	0	0	0	0
Bit	31	30	29	28	27	26	25	24	23	22	21	20	19	18	17	16	15	14	13	12	11	10	9	8	7	6	5	4	3	2	1	0

0 = Condition False
1 = Condition True

Bit 0 “Step Bit 0” – Bit 0 through Bit 4 indicate executing step number in the move table in binary format.

Bit 1 “Step Bit 1”

Bit 2 “Step Bit 2”

Bit 3 “Step Bit 3”

Bit 4 “Step Bit 4”

Bit 8 “Enabled” – Indicates that the profile control logic is enabled. When the drive is started with the profiler selection (Option 6) in the speed/torque/position mode P313 [Actv SpTqPs Mode], this bit turns on.

Bit 9 “Running” – Indicates that the profile control logic is in running state.

Bit 10 “PositionMode” – Indicates that the profile control logic is using position control logic.

Bit 11 “Dwell” – Indicates that the profile control logic is in dwell state.

Bit 12 “Holding” – Indicates that the profile control logic is in holding states

Bit 13 “In Position” – Indicates that the target position has been reached at the completion of a move. The in position bandwidth P726 [In Pos Psn Band] can be adjusted to affect when this bit is set with respect to the target position. This bit will be cleared when a new move is begun. The status of this bit is not meaningful when using blended steps.

Bit 14 “Complete” – Indicates that all steps in the move table have been executed and a step with a End action has been reached. The profile control logic is complete. This bit will be cleared when the profile is first enabled.

Bit 15 “Stopped” – Indicates that the profile control logic stops the drive following Bit 14 “Complete” and any additional dwell time specified for the End step. This bit will be cleared when a new profile is begun.

Bit 16 “Resume” – Indicates that an existing step is to resume execution when the profile is enabled. A previously running step will then be allowed to complete. When the bit is clear, the profile will begin at its Starting Step.

Bit 17 “Restart Step” – Follows the state of the restart step bit in P1213 [Profile Command] Bit 10 “Restart Step.”

Bit 18 “Vel Override” – Follows the state of the velocity override bit in P1213 [Profile Command] Bit 9 “Vel Override.”

Bit 19 “Home Not Set” – Indicates that the home position is not defined and the move table contains a position absolute move type. When this bit is set the profile will not be allowed to execute. This bit will be cleared when either a homing function or position redefine function is completed.

		1212	755 **Units Traveled** Units Traveled Indicates total number of units traveled. The relationship between the feedback edge counts and the position units is determined by the P1215 [Counts Per Unit]. Actual motor position is converted from the edge counts to this value using the P1215 [Counts Per Unit].	Units: Cnts Default: Read Only Min/Max: –/+ 2200000000.00	RO	Real

File	Group	No.	Display Name Full Name Description	Values	Read-Write	Data Type
APPLICATIONS	Profiling	1213	755 **Profile Command** Profile Command Sets bits to configure the speed profile/position indexer control logic.		RW	32-bit Integer

Options	Reserved	Reserved	Reserved	Reserved	Reserved	Reserved	Reserved	Reserved	Reserved	Reserved	Reserved	Reserved	Reserved	Reserved	Reserved	Reserved	Reserved	Reserved	Reserved	Prof Run Alm	HomNotSetAlm	Restart Step	Vel Override	Hold Step	Reserved	Reserved	Reserved	StrStepSel4	StrStepSel3	StrStepSel2	StrStepSel1	StrStepSel0
Default	0	0	0	0	0	0	0	0	0	0	0	0	0	0	0	0	0	0	0	1	1	0	0	0	0	0	0	0	0	0	0	0
Bit	31	30	29	28	27	26	25	24	23	22	21	20	19	18	17	16	15	14	13	12	11	10	9	8	7	6	5	4	3	2	1	0

0 = Disabled
1 = Enabled

Bit 0 "StrStepSel0" – Bit 0 through Bit 4 set initial or starting step in the move table in binary format. A starting step value of zero results in no motion when the drive is enabled.

Bit 1 "StrStepSel1"

Bit 2 "StrStepSel2"

Bit 3 "StrStepSel3"

Bit 4 "StrStepSel4"

Bit 8 "Hold Step" – When the drive is enabled with this bit is set, the drive starts and runs at zero velocity. The starting step is not executed until the "Hold Step" bit is removed. For non-blended moves, the drive will hold zero speed and/or current position. This does not stop the drive. For blended moves, the drive will continue to run at the step velocity. If the Hold Step bit is removed, then the conditions required to complete the step can be evaluated.

Bit 9 "Vel Override" – Can be used to rescale all move velocities by the velocity override P1216 [ProfVel Override]. When this bit is off, a scale factor of 1 is used.

Bit 10 "Restart Step" – Can be used to disable a currently executing profile. This bit forces the current step to reset to the starting step value.

Bit 11 "HomNotSetAlm" – Sets condition to indicate the "home position not set" alarm. The absolute position type will work without home position if the bit is off. Default state is Enabled.

Bit 12 "Prof Run Alm" – Sets condition to indicate the profile running alarm when the drive is running. Default state is Enabled.

File	Group	No.	Display Name Full Name Description	Values		Read-Write	Data Type
APPLICATIONS	Profiling	1215	755 **Counts Per Unit** Counts Per Unit Sets number of position feedback counts per unit of machine travel (for example 1024 encoder edge counts per inch). This parameter is used to scale position targets from their entered values of units to internal units of encoder edge counts. This parameter is also used to convert actual motor position from encoder edge counts back into the desired units for display in P1212 [Units Traveled].	Default: Min/Max:	1 1 / 2200000000	RW	32-bit Integer
APPLICATIONS	Profiling	1216	755 **ProfVel Override** Profile Velocity Override Sets multiplier for all move velocities when the velocity override function is selected P1213 [Profile Command] Bit 9 "Vel Override." This parameter is typically set to a value less than 1. When the velocity override bit P1213 [Profile Command] Bit 9 "Vel Override" is off, a scale factor of 1 is used.	Units: Default: Min/Max:	% 100.00 10.00 / 150.00	RW	Real

File	Group	No.	Display Name Full Name Description	Values	Read-Write	Data Type
APPLICATIONS	Profiling	1217	755 **Prof DI Invert** Profile Digital Input Invert		RW	32-bit Integer

Sets polarity of the digital inputs. Each bit is assigned to a move table step. Rising edge of the digital input is used when the bit is off, and falling edge of digital input is used when the bit is on.

Options	Reserved	Reserved	Reserved	Reserved	Reserved	Reserved	Reserved	Step 16	Step 15	Step 14	Step 13	Step 12	Step 11	Step 10	Step 9	Step 8	Step 7	Step 6	Step 5	Step 4	Step 3	Step 2	Step 1	StrStepSel4	StrStepSel3	StrStepSel2	StrStepSel1	StrStepSel0	Vel Override	AbortProfile	Abort Step	Hold Step
Default	0	0	0	0	0	0	0	0	0	0	0	0	0	0	0	0	0	0	0	0	0	0	0	0	0	0	0	0	0	0	0	0
Bit	31	30	29	28	27	26	25	24	23	22	21	20	19	18	17	16	15	14	13	12	11	10	9	8	7	6	5	4	3	2	1	0

0 = Condition False
1 = Condition True

Bit 0 "Hold Step" – sets polarity of the digital input for the hold step, P1218 [DI Hold Step].
Bit 1 "Abort Step" – sets polarity of the digital input for abort step, P1219 [DI Abort Step].
Bit 2 "AbortProfile" – sets polarity of the digital input for abort profile, P1220 [DI Abort Profile].
Bit 3 "Vel Override" – sets polarity of the digital input for velocity override, P1221 [DI Vel Override].
Bit 4 "StrStepSel0" – sets polarity of the digital input for start step 1, P1222 [DI StrtStep Sel0].
Bit 5 "StrStepSel1" – sets polarity of the digital input for start step 2, P1223 [DI StrtStep Sel1].
Bit 6 "StrStepSel2" – sets polarity of the digital input for start step 3, P1224 [DI StrtStep Sel2].
Bit 7 "StrStepSel3" – sets polarity of the digital input for start step 4, P1225 [DI StrtStep Sel3].
Bit 8 "StrStepSel4" – sets polarity of the digital input for start step 5, P1226 [DI StrtStep Sel4]
Bit 9 "Step 1" – sets polarity of the digital input for move step 1, P1230 [Step 1 Type].
Bit 10 "Step 2" – sets polarity of the digital input for move step 2, P1240 [Step 2 Type].
Bit 11 "Step 3" – sets polarity of the digital input for move step 3, P1250 [Step 3 Type].
Bit 12 "Step 4" – sets polarity of the digital input for move step 4, P1260 [Step 4 Type].
Bit 13 "Step 5" – sets polarity of the digital input for move step 5, P1270 [Step 5 Type].
Bit 14 "Step 6" – sets polarity of the digital input for move step 6, P1280 [Step 6 Type].
Bit 15 "Step 7" – sets polarity of the digital input for move step 7, P1290 [Step 7 Type].
Bit 16 "Step 8" – sets polarity of the digital input for move step 8, P1300 [Step 8 Type].
Bit 17 "Step 9" – sets polarity of the digital input for move step 9, P1310 [Step 9 Type].
Bit 18 "Step 10" – sets polarity of the digital input for move step 10, P1320 [Step 10 Type].
Bit 19 "Step 11" – sets polarity of the digital input for move step 11, P1330 [Step 11 Type].
Bit 20 "Step 12" – sets polarity of the digital input for move step 12, P1340 [Step 12 Type].
Bit 21 "Step 13" – sets polarity of the digital input for move step 13, P1350 [Step 13 Type].
Bit 22 "Step 14" – sets polarity of the digital input for move step 14, P1360 [Step 14 Type].
Bit 23 "Step 15" – sets polarity of the digital input for move step 15, P1370 [Step 15 Type].
Bit 24 "Step 16" – sets polarity of the digital input for move step 16, P1380 [Step 16 Type].

1218	755 **DI Hold Step** Digital Input Hold Step Sets a digital input port for the hold step in profile/indexer control logic. The digital input assigned by this parameter is equivalent to P1213 [Profile Command] Bit 8 "Hold Step." Polarity of active state is defined by P1217 [Prof DI Invert] Bit 0 "Hold Step."	Default: Min/Max:	0.00 0.00 / 159999.15	RW	32-bit Integer
1219	755 **DI Abort Step** Digital Input Abort Step Sets a digital input port for the abort step in profile/indexer control logic. Polarity of active state is defined by P1217 [Prof DI Invert] Bit 1 "Abort Step."	Default: Min/Max:	0.00 0.00 / 159999.15	RW	32-bit Integer

File	Group	No.	Display Name Full Name Description	Values		Read-Write	Data Type
APPLICATIONS	Profiling	1220	755 **DI Abort Profile** Digital Input Abort Profile Sets a digital input port for the abort profile in profile/indexer control logic. Polarity of active state is defined by P1217 [Prof DI Invert] Bit 2 "AbortProfile."	Default: Min/Max:	0.00 0.00 / 159999.15	RW	32-bit Integer
		1221	755 **DI Vel Override** Digital Input Velocity Profile Sets a digital input port for the velocity override in profile/indexer control logic. The digital input assigned by this parameter is equivalent to P1213 [Profile Command] Bit 9 "Vel Override." Polarity of active state is defined by P1217 [Prof DI Invert] Bit 3 "Vel Override."	Default: Min/Max:	0.00 0.00 / 159999.15	RW	32-bit Integer
		1222 1223 1224 1225 1226	755 **DI StrtStep Sel0** 755 **DI StrtStep Sel1** 755 **DI StrtStep Sel2** 755 **DI StrtStep Sel3** 755 **DI StrtStep Sel4** Digital Input Start Step Select *n* Set digital input ports for the start step in profile/indexer control logic. The digital inputs assigned by these parameters are equivalent to P1213 [Profile Command] Bit 4 "StrStepSel4." Polarities of active state are defined by P1217 [Prof DI Invert] Bit 4 "StrStepSel0" to Bit 8 "StrStepSel4."	Default: Min/Max:	0.00 0.00 / 159999.15	RW	32-bit Integer
		1230 1240 1250 1260 1270 1280 1290 1300 1310 1320 1330 1340 1350 1360 1370 1380	755 **Step 1 Type** 755 **Step 2 Type** 755 **Step 3 Type** 755 **Step 4 Type** 755 **Step 5 Type** 755 **Step 6 Type** 755 **Step 7 Type** 755 **Step 8 Type** 755 **Step 9 Type** 755 **Step 10 Type** 755 **Step 11 Type** 755 **Step 12 Type** 755 **Step 13 Type** 755 **Step 14 Type** 755 **Step 15 Type** 755 **Step 16 Type** Step *n* Type Set type of move for a particular step. The possible step types are: "Speed" (0) = Speed Profile moves in speed mode. "Position Abs" (1) = Position Absolute moves in absolute position mode. "PositionIncr" (2) = Position Incremental moves in position increment mode. The drive must have the direction mode set to the bipolar for the position regulator to function properly. The current, torque, and regen power limits must be set so as not to limit the programmed deceleration time. If the limits occur, the position regulator may overshoot the position set point.	Default: Options:	0 = "Speed" 0 = "Speed" 1 = "Position Abs" 2 = "PositionIncr"	RW	32-bit Integer

File	Group	No.	Display Name Full Name Description	Values		Read-Write	Data Type
APPLICATIONS	Profiling	1231 1241 1251 1261 1271 1281 1291 1301 1311 1321 1331 1341 1351 1361 1371 1381	755 **Step 1 Velocity** 755 **Step 2 Velocity** 755 **Step 3 Velocity** 755 **Step 4 Velocity** 755 **Step 5 Velocity** 755 **Step 6 Velocity** 755 **Step 7 Velocity** 755 **Step 8 Velocity** 755 **Step 9 Velocity** 755 **Step 10 Velocity** 755 **Step 11 Velocity** 755 **Step 12 Velocity** 755 **Step 13 Velocity** 755 **Step 14 Velocity** 755 **Step 15 Velocity** 755 **Step 16 Velocity** Step *n* Velocity Set speed at which a move will take place. The step velocity applies to all three types of moves – position absolute, position incremental, and speed profile. The motor may not achieve the step velocity in all cases. Short distance moves may begin to decelerate before the step velocity is reached. If the move is sufficiently long, then the motor speed will be limited to the step velocity. Sign on the step velocity is used to determine direction of motor rotation. Cannot be used with most blended moves in Position Absolute type and Position Incremental type.	Units: Default: Min/Max:	Hz / RPM 0.00 –/+P27 [Motor NP Hertz] x 8 –/+P28 [Motor NP RPM] x 8	RW	Real
		1232 1242 1252 1262 1272 1282 1292 1302 1312 1322 1332 1342 1352 1362 1372 1382	755 **Step 1 Accel** 755 **Step 2 Accel** 755 **Step 3 Accel** 755 **Step 4 Accel** 755 **Step 5 Accel** 755 **Step 6 Accel** 755 **Step 7 Accel** 755 **Step 8 Accel** 755 **Step 9 Accel** 755 **Step 10 Accel** 755 **Step 11 Accel** 755 **Step 12 Accel** 755 **Step 13 Accel** 755 **Step 14 Accel** 755 **Step 15 Accel** 755 **Step 16 Accel** Step *n* Acceleration Set acceleration time between zero and rated motor speed in seconds. The motor will accelerate towards the step speed using the step velocity parameter. The minimum acceleration rate is determined by the system inertia. Cannot be used with most blended moves in Position Absolute type and Position Incremental type.	Units: Default: Min/Max:	Secs 10.00 0.00 / 3600.00	RW	Real

File	Group	No.	Display Name Full Name Description	Values		Read-Write	Data Type
APPLICATIONS	Profiling	1233	755 **Step 1 Decel**	Units:	Secs	RW	Real
		1243	755 **Step 2 Decel**	Default:	10.00		
		1253	755 **Step 3 Decel**	Min/Max:	0.00 / 3600.00		
		1263	755 **Step 4 Decel**				
		1273	755 **Step 5 Decel**				
		1283	755 **Step 6 Decel**				
		1293	755 **Step 7 Decel**				
		1303	755 **Step 8 Decel**				
		1313	755 **Step 9 Decel**				
		1323	755 **Step 10 Decel**				
		1333	755 **Step 11 Decel**				
		1343	755 **Step 12 Decel**				
		1353	755 **Step 13 Decel**				
		1363	755 **Step 14 Decel**				
		1373	755 **Step 15 Decel**				
		1383	755 **Step 16 Decel** Step *n* Deceleration Set deceleration time between rated motor speed and zero in seconds. The motor will decelerate towards zero speed. The minimum deceleration rate is determined by the system inertia. Cannot be used with most blended moves in Position Absolute type and Position Incremental type.				

File	Group	No.	Display Name Full Name Description	Values		Read-Write	Data Type
APPLICATIONS	Profiling	1234 1244 1254 1264 1274 1284 1294 1304 1314 1324 1334 1344 1354 1364 1374 1384	755 **Step 1 Value** 755 **Step 2 Value** 755 **Step 3 Value** 755 **Step 4 Value** 755 **Step 5 Value** 755 **Step 6 Value** 755 **Step 7 Value** 755 **Step 8 Value** 755 **Step 9 Value** 755 **Step 10 Value** 755 **Step 11 Value** 755 **Step 12 Value** 755 **Step 13 Value** 755 **Step 14 Value** 755 **Step 15 Value** 755 **Step 16 Value** Step *n* Value These parameters can take on any one of several meanings depending on the move type and action. The possible meanings for these parameters are given below. All other type/action combinations will be ignored. [Type] = Position Absolute [Action] = Posit Blend, Wait Dig-in, or Step to Next [Value] is the Absolute Target Position [Type] = Position Incremental [Action] = Posit Blend, Wait Dig-in, or Step to Next [Value] is the Incremental Target Position [Type] = Speed Profile [Action] = Posit Blend [Value] is the Incremental Target Position [Type] = Speed Profile [Action] = Time Blend, Wait Dig-in, or Step to Next [Value] is the Total Time to complete the move. Time is specified in 1/100ths of a second (1000 = 10.00 seconds). Negative values result in time = 0 seconds (no move) [Type] = Speed Profile [Action] = Parameter Blend [Value] is the parameter number to compare against the parameter set-point specified in the dwell parameter. Positive numbers will use a greater than check, negative numbers will use a less than check.	Default: Min/Max:	0 –2147483648 / 2147483647	RW	32-bit Integer

File	Group	No.	Display Name Full Name Description	Values		Read-Write	Data Type
APPLICATIONS	Profiling	1235 1245 1255 1265 1275 1285 1295 1305 1315 1325 1335 1345 1355 1365 1375 1385	755 **Step 1 Dwell** 755 **Step 2 Dwell** 755 **Step 3 Dwell** 755 **Step 4 Dwell** 755 **Step 5 Dwell** 755 **Step 6 Dwell** 755 **Step 7 Dwell** 755 **Step 8 Dwell** 755 **Step 9 Dwell** 755 **Step 10 Dwell** 755 **Step 11 Dwell** 755 **Step 12 Dwell** 755 **Step 13 Dwell** 755 **Step 14 Dwell** 755 **Step 15 Dwell** 755 **Step 16 Dwell** Step *n* Dwell Set time delay between moves. P1210 [Profile Status] Bit 11 "Dwell" will be set to indicate that the step dwell period is active and timing. Zero value will disable dwell, negative value will wait forever. Not all steps can use dwell (example, most blended moves cannot use dwell). When the speed type with the parameter blend action move is used, the step dwell parameter will contain the parameter number of the set-point value to compare with the parameter selected in the value parameter.	Units: Default: Min/Max:	Secs 0.00 –1.00 / 3600.00	RW	Real
		1236 1246 1256 1266 1276 1286 1296 1306 1316 1326 1336 1346 1356 1366 1376 1386	755 **Step 1 Batch** 755 **Step 2 Batch** 755 **Step 3 Batch** 755 **Step 4 Batch** 755 **Step 5 Batch** 755 **Step 6 Batch** 755 **Step 7 Batch** 755 **Step 8 Batch** 755 **Step 9 Batch** 755 **Step 10 Batch** 755 **Step 11 Batch** 755 **Step 12 Batch** 755 **Step 13 Batch** 755 **Step 14 Batch** 755 **Step 15 Batch** 755 **Step 16 Batch** Step *n* Batch Set number of times to repeat a step. For example, a batch count of two will cause that step to repeat two times before starting the next step. These parameters cannot be used with position absolute moves, since this would imply moving to the same position repeatedly. These parameters cannot be used with most blended moves (exception dig-in blend), because most blended moves need to transition to the next step, instead of repeating. The dig-in blend moves use this parameter to specify the number of digital input transitions required. A zero step batch setting will cause that step to repeat forever.	Default: Min/Max:	1 0 / 65535	RW	32-bit Integer

File	Group	No.	Display Name Full Name Description	Values		Read-Write	Data Type
APPLICATIONS	Profiling	1237 1247 1257 1267 1277 1287 1297 1307 1317 1327 1337 1347 1357 1367 1377 1387	755 **Step 1 Next** 755 **Step 2 Next** 755 **Step 3 Next** 755 **Step 4 Next** 755 **Step 5 Next** 755 **Step 6 Next** 755 **Step 7 Next** 755 **Step 8 Next** 755 **Step 9 Next** 755 **Step 10 Next** 755 **Step 11 Next** 755 **Step 12 Next** 755 **Step 13 Next** 755 **Step 14 Next** 755 **Step 15 Next** 755 **Step 16 Next** Step *n* Next Set step number that will be executed after the current step is complete. The current step will be complete after any batch repeat cycles have finished. Typically, steps are executed in ascending order, although this is not a requirement. These parameters do not apply to a step having an End action, since this step is normally used to terminate a sequence of step moves.	Default: Min/Max:	2 1 / 16	RW	32-bit Integer
		1238 1248 1258 1268 1278 1288 1298 1308 1318 1328 1338 1348 1358 1368 1378 1388	755 **Step 1 Action** 755 **Step 2 Action** 755 **Step 3 Action** 755 **Step 4 Action** 755 **Step 5 Action** 755 **Step 6 Action** 755 **Step 7 Action** 755 **Step 8 Action** 755 **Step 9 Action** 755 **Step 10 Action** 755 **Step 11 Action** 755 **Step 12 Action** 755 **Step 13 Action** 755 **Step 14 Action** 755 **Step 15 Action** 755 **Step 16 Action** Step *n* Action Set what is to be done at the end of a step after the move is complete. End (0) = End stops the move sequence. Step to Next (1) = Step to Next moves to the next step after the speed ramp up/down is completed in the specific total time. The dwell time and the batch can be applied. Psn Blend (2) = Posit Blend moves to the next step after the actual position becomes greater than the position specified in the value parameter. Time Blend (3) = Time Blend moves to the next step after the total running time becomes greater than the time specified in the value parameter. Param Blend (4) = Param Blend moves to the next step after comparison of two parameters is satisfied. The parameters for comparison are specified in the value and dwell parameter. DigIn Blend (5) = DigIn Blend moves to the next step after the specified number of digital input rising (or falling) edges are applied. The batch parameter specifies the number of digital input edges. Wait DigIn (6) = Wait DigIn moves to the next step after the digital input rising (or falling) edges are applied.	Default: Options:	1 = “Step to Next” 0 = “End” 1 = “Step to Next” 2 = “Psn Blend” 3 = “Time Blend” 4 = “Param Blend” 5 = “DigIn Blend” 6 = “Wait DigIn”	RW	32-bit Integer

File	Group	No.	Display Name Full Name Description	Values		Read-Write	Data Type
APPLICATIONS	Profiling	1239	755 **Step 1 Dig In**	Default: Min/Max:	0.00 0.00 / 159999.15	RW	32-bit Integer
		1249	755 **Step 2 Dig In**				
		1259	755 **Step 3 Dig In**				
		1269	755 **Step 4 Dig In**				
		1279	755 **Step 5 Dig In**				
		1289	755 **Step 6 Dig In**				
		1299	755 **Step 7 Dig In**				
		1309	755 **Step 8 Dig In**				
		1319	755 **Step 9 Dig In**				
		1329	755 **Step 10 Dig In**				
		1339	755 **Step 11 Dig In**				
		1349	755 **Step 12 Dig In**				
		1359	755 **Step 13 Dig In**				
		1369	755 **Step 14 Dig In**				
		1379	755 **Step 15 Dig In**				
		1389	755 **Step 16 Dig In**  Step *n* Digital Input Set digital input sources. Not all steps use the digital input for the step move. The following type and action moves use the dig-in parameters to specify the digital input sources. Polarity (rising or falling edges) of digital input is set by P1217 [Prof DI Invert]. 1. [Type] Position Absolute [Action] Wait DigIn 2. [Type] Position Incremental [Action] Wait DigIn 3. [Type] Speed Profile [Action] DigIn Blend 4. [Type] Speed Profile [Action] Wait DigIn				

File	Group	No.	Display Name Full Name Description	Values		Read-Write	Data Type
APPLICATIONS	Camming	**1390**	**755 PCAM Control** Position Camming Control Sets bits to control the position CAM control logic. Options: Reserved, Reserved, Reserved, Reserved, Reserved, Reserved, Reserved, Cndtnl Hold, Unidirection, Reref Psn In, Offset En, Alt Slope, Aux Cam En, ReverseY Out, ReverseX In, Start Default: 0 0 0 0 0 0 0 0 0 0 0 0 0 0 0 0 Bit: 15 14 13 12 11 10 9 8 7 6 5 4 3 2 1 0 0 = Disabled 1 = Enabled Bit 0 "Start" – Start the position CAM Bit 1 "ReverseX In" – Reverse polarity of x-axis input (P1392 [PCAM Psn Select]) Bit 2 "ReverseY Out" – Reverse polarity of y-axis output at beginning of next cycle (P1473 [PCAM Psn Out]) Bit 3 "Aux Cam En" – Switch to the auxiliary CAM profile at beginning of next cycle Bit 4 "Alt Slope" – Use a different slope calculation Bit 5 "Offset En" – Enable input offset function (P1394 [PCAM Psn Ofst]) Bit 6 "Reref Psn In" – Permit re-referencing x-axis input (P1392 PCAM Psn Select]) Bit 7 "Unidirection" – Use unidirectional operation Bit 8 "Cndtnl Hold" – Freeze the speed regulator's integrator if position reference changes. This bit is recommended to be set for point to point motion.			RW	16-bit Integer
		1391	**755 PCAM Mode** Position Camming Mode The parameter sets type of operational mode. "Off" (0) – Disable position CAM function "Single Step" (1) – At rising edge of Start (P1390 [PCAM Control]), the CAM profile begins at point 0 and runs until the x-axis has reached the last point defined by the end point (P1405 [PCAM Main EndPnt] and P1439 [PCAM Aux EndPnt]) at which point it is completed. If the x-axis then backs up into CAM range, nothing happens; the profile has already completed and won't restart until control Start (P1390 [PCAM Control]) is once again set. "Continuous" (2) – At rising edge of Start (P1390 [PCAM Control]), the CAM profile begins at point 0 and runs to the end point (P1405 [PCAM Main EndPnt] and P1439 [PCAM Aux EndPnt]), and then repeats forever or until the control bit Start (P1390 [PCAM Control]) is cleared. "Persistent" (3) – At rising edge of Start (P1390 [PCAM Control]), the CAM profile begins at point 0 and runs to the end point (P1405 [PCAM Main EndPnt] and P1439 [PCAM Aux EndPnt]), and remains active until the control bit Start (P1390 [PCAM Control]) is cleared.	Default: Options:	0 = "Off" 0 = "Off" 1 = "Single Step" 2 = "Continuous" 3 = "Persistent"	RW	32-bit Integer
		1392	**755 PCAM Psn Select** Position Camming Position Select The parameter selects a position reference source for x-axis.	Default: Options:	1393 1 / 159999	RW	32-bit Integer
		1393	**755 PCAM Psn Stpt** Position Camming Position Setpoint The parameter provides position reference for x-axis when the position reference select (P1392 [PCAM Psn Select]) selects this parameter.	Default: Min/Max:	0 –2147483648 / 2147483647	RW	32-bit Integer
		1394	**755 PCAM Psn Ofst** Position Camming Position Offset The parameter provides position offset value to x-axis position when the offset enable control bit (P1390 [PCAM Control]) is set. The offset value causes a phase shift or position change in x-axis and a momentary change to CAM speed.	Default: Min/Max:	0 –2147483648 / 2147483647	RW	32-bit Integer

File	Group	No.	Display Name Full Name Description	Values		Read-Write	Data Type
APPLICATIONS	Camming	1395	755 **PCAM PsnOfst Eps** Position Camming Position Offset Eps The parameter provides count of edges per second for virtual encoder function. The value makes a limit on change of x-axis position in change of position offset input.	Default: Min/Max:	2000 0 / 2147483647	RW	32-bit Integer
		1396	755 **PCAM Span X** Position Camming Span X Axis The parameter provides the number of integer counts equivalent to the span or range of x-axis.	Default: Min/Max:	8192 0 / 2147483647	RW	32-bit Integer
		1397	755 **PCAM Scale X** Position Camming Scale X Axis The parameter multiplies span x (P1396 [PCAM Span X]) such that the x-axis dimension will expand if this parameter is greater than 1.	Default: Min/Max:	1.00 0.01 / 214748000.00	RW	Real
		1398	755 **PCAM Span Y** Position Camming Span Y Axis The parameter provides the number of edges equivalent to the span of the y-axis. The value is the number of integer counts representing the maximum vertical extent of the profile.	Default: Min/Max:	8192 0 / 2147483647	RW	32-bit Integer
		1399	755 **PCAM ScaleY Sel** Position Camming Scale Y Axis Select The parameter selects a source for y-axis scale.	Default: Options:	1400 1 / 159999	RW	32-bit Integer
		1400	755 **PCAM ScaleYSetPt** Position Camming Scale Y Axis Setpoint The parameter provides y-axis scale when the y scale select (P1399 [PCAM ScaleY Sel]) selects this parameter. The y scale multiplies the y span such that the y-axis dimension will increase if y scale is greater than 1.	Default: Min/Max:	1.00 0.00 / 214748000.00	RW	Real
		1401	755 **PCAM VelScaleSel** Position Camming Velocity Scale Select The parameter selects a source for velocity scale.	Default: Options:	1402 1 / 159999	RW	32-bit Integer
		1402	755 **PCAM VelScaleSP** Position Camming Velocity Scale Setpoint The parameter provides velocity scale when the velocity scale select (P1401 [PCAM VelScaleSel]) selects this parameter. The velocity scale multiplies the velocity output (P1472 [PCAM Vel Out]) such that the velocity output (P1472) will decrease if the velocity scale is less than 1.	Units: Default: Min/Max:	MPE 0.000100 0.000000 / 8.000000	RW	Real
		1403	755 **PCAM Slope Begin** Position Camming Slope Begin The parameter provides beginning slope at CAM point 0. The parameter is used only if the segment is cubic type curve.	Default: Min/Max:	0.00 –/+214748000.00	RW	Real
		1404	755 **PCAM Slope End** Position Camming Slope End The parameter provides ending slope at CAM point 0. The parameter is used only if the segment is cubic type curve in both the main and the auxiliary CAM profile.	Default: Min/Max:	0.00 –/+214748000.00	RW	Real
		1405	755 **PCAM Main EndPnt** Position Camming Main End Point The parameter provides a number of the last CAM point used in the main CAM profile.	Default: Options:	0 0 / 15	RW	32-bit Integer

File	Group	No.	Display Name Full Name Description	Values	Read-Write	Data Type
APPLICATIONS	Camming	**1406**	755 **PCAM Main Types** Position Camming Main Types Each bit sets curve type for each segment in the main CAM profile. If the bit is clear, the curve is linear at the point of segment in the main CAM profile. If the bit is set, the curve is cubic at the point of segment in the main CAM profile.		RW	32-bit Integer

Options	Reserved	Reserved	Reserved	Reserved	Reserved	Reserved	Reserved	Reserved	Reserved	Reserved	Reserved	Reserved	Reserved	Reserved	Reserved	Reserved	CubicCurve15	CubicCurve14	CubicCurve13	CubicCurve12	CubicCurve11	CubicCurve10	CubicCurve9	CubicCurve8	CubicCurve7	CubicCurve6	CubicCurve5	CubicCurve4	CubicCurve3	CubicCurve2	CubicCurve1	CubicCurve0
Default	0	0	0	0	0	0	0	0	0	0	0	0	0	0	0	0	0	0	0	0	0	0	0	0	0	0	0	0	0	0	0	0
Bit	31	30	29	28	27	26	25	24	23	22	21	20	19	18	17	16	15	14	13	12	11	10	9	8	7	6	5	4	3	2	1	0

0 = Disabled
1 = Enabled

1407 **1409** **1411** **1413** **1415** **1417** **1419** **1421** **1423** **1425** **1427** **1429** **1431** **1433** **1435** **1437**	755 **PCAM Main Pt X 0** 755 **PCAM Main Pt X 1** 755 **PCAM Main Pt X 2** 755 **PCAM Main Pt X 3** 755 **PCAM Main Pt X 4** 755 **PCAM Main Pt X 5** 755 **PCAM Main Pt X 6** 755 **PCAM Main Pt X 7** 755 **PCAM Main Pt X 8** 755 **PCAM Main Pt X 9** 755 **PCAM Main PtX 10** 755 **PCAM Main PtX 11** 755 **PCAM Main PtX 12** 755 **PCAM Main PtX 13** 755 **PCAM Main PtX 14** 755 **PCAM Main PtX 15** Position Camming Main Point X *n* Provides x-coordinate value for CAM point in the main CAM profile.	Default: Min/Max:	0.00 –/+220000000.00	RW	Real
1408 **1410** **1412** **1414** **1416** **1418** **1420** **1422** **1424** **1426** **1428** **1430** **1432** **1434** **1436** **1438**	755 **PCAM Main Pt Y 0** 755 **PCAM Main Pt Y 1** 755 **PCAM Main Pt Y 2** 755 **PCAM Main Pt Y 3** 755 **PCAM Main Pt Y 4** 755 **PCAM Main Pt Y 5** 755 **PCAM Main Pt Y 6** 755 **PCAM Main Pt Y 7** 755 **PCAM Main Pt Y 8** 755 **PCAM Main Pt Y 9** 755 **PCAM Main PtY 10** 755 **PCAM Main PtY 11** 755 **PCAM Main PtY 12** 755 **PCAM Main PtY 13** 755 **PCAM Main PtY 14** 755 **PCAM Main PtY 15** Position Camming Main Point Y *n* Provides y-coordinate value for CAM point in the main CAM profile.	Default: Min/Max:	0.00 –/+220000000.00	RW	Real

File	Group	No.	Display Name Full Name Description	Values		Read-Write	Data Type
APPLICATIONS	Camming	1439	755 **PCAM Aux EndPnt** Position Camming Auxiliary End Point Provides a number of the last CAM point used in the auxiliary CAM profile.	Default: Options:	1 1 / 15	RW	32-bit Integer
		1440	755 **PCAM Aux Types** Position Camming Auxiliary Types Each bit sets curve type for each segment in the auxiliary CAM profile. If the bit is clear, the curve is linear at the point of segment in the auxiliary CAM profile. If the bit is set, the curve is cubic at the point of segment in the auxiliary CAM profile.			RW	32-bit Integer
		1441 1443 1445 1447 1449 1451 1453 1455 1457 1459 1461 1463 1465 1467 1469	755 **PCAM Aux Pt X 1** 755 **PCAM Aux Pt X 2** 755 **PCAM Aux Pt X 3** 755 **PCAM Aux Pt X 4** 755 **PCAM Aux Pt X 5** 755 **PCAM Aux Pt X 6** 755 **PCAM Aux Pt X 7** 755 **PCAM Aux Pt X 8** 755 **PCAM Aux Pt X 9** 755 **PCAM Aux PtX 10** 755 **PCAM Aux PtX 11** 755 **PCAM Aux PtX 12** 755 **PCAM Aux PtX 13** 755 **PCAM Aux PtX 14** 755 **PCAM Aux PtX 15** Position Camming Auxiliary Point X *n* Provides x-coordinate value for CAM point in the auxiliary CAM profile.	Default: Min/Max:	0.00 –/+220000000.00	RW	Real
		1442 1444 1446 1448 1450 1452 1454 1456 1458 1460 1462 1464 1466 1468 1470	755 **PCAM Aux Pt Y 1** 755 **PCAM Aux Pt Y 2** 755 **PCAM Aux Pt Y 3** 755 **PCAM Aux Pt Y 4** 755 **PCAM Aux Pt Y 5** 755 **PCAM Aux Pt Y 6** 755 **PCAM Aux Pt Y 7** 755 **PCAM Aux Pt Y 8** 755 **PCAM Aux Pt Y 9** 755 **PCAM Aux PtY 10** 755 **PCAM Aux PtY 11** 755 **PCAM Aux PtY 12** 755 **PCAM Aux PtY 13** 755 **PCAM Aux PtY 14** 755 **PCAM Aux PtY 15** Position Camming Auxiliary Point Y *n* Provides y-coordinate value for CAM point in the auxiliary CAM profile.	Default: Min/Max:	0.00 –/+220000000.00	RW	Real

Options

	Reserved	Reserved	Reserved	Reserved	Reserved	Reserved	Reserved	Reserved	Reserved	Reserved	Reserved	Reserved	Reserved	Reserved	Reserved	Reserved	CubicCurve15	CubicCurve14	CubicCurve13	CubicCurve12	CubicCurve11	CubicCurve10	CubicCurve9	CubicCurve8	CubicCurve7	CubicCurve6	CubicCurve5	CubicCurve4	CubicCurve3	CubicCurve2	CubicCurve1	Reserved
Default	0	0	0	0	0	0	0	0	0	0	0	0	0	0	0	0	0	0	0	0	0	0	0	0	0	0	0	0	0	0	0	0
Bit	31	30	29	28	27	26	25	24	23	22	21	20	19	18	17	16	15	14	13	12	11	10	9	8	7	6	5	4	3	2	1	0

0 = Disabled
1 = Enabled

File	Group	No.	Display Name Full Name Description	Values		Read-Write	Data Type
APPLICATIONS	Camming	1471	755 **PCAM Status** Position Camming Status Indicates status of position CAM logic.			RO	32-bit Integer

Options	Reserved	Reserved	Reserved	Reserved	Reserved	Reserved	Reserved	Reserved	Reserved	Reserved	Reserved	Reserved	Reserved	Reserved	Reserved	Reserved	Reserved	Reserved	Reserved	Reserved	Cndtnl Hold	Unidirection	Reref Psn In	Offset En	Alt Slope	Aux Cam En	ReverseY Out	ReverseX In	Start	In Cam	Persist Mode	Contins Mode	Single Mode
Default	0	0	0	0	0	0	0	0	0	0	0	0	0	0	0	0	0	0	0	0	0	0	0	0	0	0	0	0	0	0	0	0	0
Bit	31	30	29	28	27	26	25	24	23	22	21	20	19	18	17	16	15	14	13	12	11	10	9	8	7	6	5	4	3	2	1	0	

0 = Disabled
1 = Enabled

Bit 0 “Single Mode” – Position CAM is in single step mode.
Bit 1 “Contins Mode” – Position CAM is in continuous mode.
Bit 2 “Persist Mode” – Position CAM is in persistent mode.
Bit 3 “In Cam” – X-axis is in range of defined profile.
Bit 4 “Start” – Position CAM has started.
Bit 5 “ReverseX In” – X-axis input is reversed.
Bit 6 “ReverseY Out” – Y-axis output is reversed.
Bit 7 “Aux Cam En” – Auxiliary CAM profile is in use.
Bit 8 “Alt Slope” – Alternated slope is in use.
Bit 9 “Offset En” – X-axis offset is enabled.
Bit 10 “Reref Pos In” – X-position input is re-referencing.
Bit 11 “Unidirection” – Position CAM is in unidirectional mode.
Bit 12 “Cndtnl Hold” – Conditional integrator hold is in use.

	1472	755 **PCAM Vel Out** Position Camming Velocity Output Indicates output velocity in per unit. The value is connected to the speed regulator.	Units: Default: Min/Max:	Hz RPM 0.00 0.00 / P27 [Motor NP Hertz] x 8 0.00 / P28 [Motor NP RPM] x 8	RO	Real
	1473	755 **PCAM Psn Out** Position Camming Position Output Indicates output position. The value is connected to the position regulator.	Default: Min/Max:	0.00 –/+220000000.00	RO	32-bit Integer
	1474	755 **DI PCAM Start** Digital Input Position Camming Start Selects the digital input used to start the position camming sequence.	Default: Min/Max:	0.00 0.00 / 159999.15	RW	32-bit Integer

File	Group	No.	Display Name Full Name Description	Values	Read-Write	Data Type
APPLICATIONS	Roll Position	1500	755 **Roll Psn Config** Roll Position Indicator Configuration Configuration for the Roll Position Indicator function. Options: Reserved, Reserved, Reserved, Reserved, Reserved, Reserved, Reserved, Reserved, Reserved, Reserved, Reserved, Reserved, EGR Select, Rereference, Preset, Enable Default: 0 0 0 0 0 0 0 0 0 0 0 0 0 0 0 0 Bit: 15 14 13 12 11 10 9 8 7 6 5 4 3 2 1 0 0 = Disabled 1 = Enabled Bit 0 "Enable" – Enables the Roll Position Indicator function. Bit 1 "Preset" – At rising edge of this bit, P1504 [Roll Psn Preset] is loaded in P1505 [Roll Psn Offset]. Bit 2 "Rereference" – Permit changing the offset value of P1511 [RP Psn Output] without affecting actual position. Bit 3 "EGR Select" – 0 = EGR with gear ratio input as numerator and gear ratio output as denominator. 1 = EGR with gear ratio output as numerator and gear ratio input as denominator.		RW	16-bit Integer
		1501	755 **Roll Psn Status** Roll Position Indicator Status Status of the Roll Position Indicator function. Options: Reserved, Reserved, Reserved, Reserved, Reserved, Reserved, Reserved, Reserved, Reserved, Reserved, Reserved, Reserved, Reserved, Reserved, Rereference, Enable Default: 0 0 0 0 0 0 0 0 0 0 0 0 0 0 0 0 Bit: 15 14 13 12 11 10 9 8 7 6 5 4 3 2 1 0 0 = Disabled 1 = Enabled Bit 0 "Enable" – Acknowledges that Roll Position Indicator function is enabled. Bit 1 "Rereference" – Acknowledges that rereferencing of P1511 [RP Psn Output] is active.		RO	16-bit Integer
		1502	755 **RP Psn Fdbk Stpt** Roll Position Position Indicator Feedback Setpoint Provides a set point for the position feedback value in the form of accumulated encoder counts.	Default: 0 Min/Max: –2147483648 / 2147483647	RW	32-bit Integer
		1503	755 **RP Psn Fdbk Sel** Roll Position Position Indicator Feedback Select Selects source data for the position feedback. The function generates P1511 [RP Psn Output] based on the selected position feedback source.	Default: 1502 Min/Max: 0 / 159999	RW	32-bit Integer
		1504	755 **Roll Psn Preset** Roll Position Indicator Preset Provides a pre-set position value. At rising edge of Bit 1 "Preset" in P1500 [Roll Psn Config], this parameter value is loaded in P1511 [RP Psn Output]. Note: P1511 [RP Psn Output] is limited by P1509 [RP Unwind].	Default: 0 Min/Max: –2147483648 / 2147483647	RW	32-bit Integer
		1505	755 **Roll Psn Offset** Roll Position Indicator Offset Provides position offset, which is summed after the EPR and used to trim the phase of the position feedback.	Default: 0 Min/Max: –2147483648 / 2147483647	RW	32-bit Integer
		1506	755 **RP EPR Input** Roll Position Indicator Edges Per Revolution Input Sets edges per revolution of the physical input device such as the motor encoder.	Default: 4096 Min/Max: 1 / 67108864	RW	32-bit Integer

File	Group	No.	Display Name Full Name Description	Values		Read-Write	Data Type
APPLICATIONS	Roll Position	1507	755 **RP RvIs Input** Roll Position Indicator Revolutions Input Sets revolution of the input encoder. This parameter must be coordinated with the revolution of the output encoder P1508 [RP RvIs Output] to resolve the gear ratio between input revolutions and output (virtual) revolutions. The ratio of input to output revolutions can always be resolved into integer values and should be reduce to their lowest common factor.	Default: Min/Max:	1 –/+1000000	RW	32-bit Integer
		1508	755 **RP RvIs Output** Roll Position Indicator Revolutions Output Sets revolution of the output encoder. This parameter must be coordinated with the revolution of the input encoder P1507 [RP RvIs Input] to resolve the gear ratio between input revolutions and output (virtual) revolutions. The ratio of input to output revolutions can always be resolved into integer values and should be reduce to their lowest common factor.	Default: Min/Max:	1 1 / 4294967295	RW	32-bit Integer
		1509	755 **RP Unwind** Roll Position Indicator Unwind Count Sets the number of counts per roll revolution. P1511 [RP Psn Output] rolls over at this count minus 1.	Default: Min/Max:	4194304 1024 / 536870912	RW	32-bit Integer
		1510	755 **RP Unit Scale** Roll Position Indicator Unit Scale Provides the multiplier to P1512 [RP Unit Out], which is a floating point output of P1511 [RP Psn Output].	Default: Min/Max:	1.00000 –/+220000000.00000	RW	Real
		1511	755 **RP Psn Output** Roll Position Indicator Position Output Output of roll position, which has a span limited by P1509 [RP Unwind].	Default: Min/Max:	0 0 / 4294967295	RO	32-bit Integer
		1512	755 **RP Unit Out** Roll Position Indicator Unit Output Floating point output that results from multiplying P1511 [RP Psn Output] by P1510 [RP Unit Scale].	Default: Min/Max:	0.00 –/+220000000.00	RO	Real

File	Group	No.	Display Name Full Name Description	Values	Read-Write	Data Type
APPLICATIONS	Torque Boost	1515	755 **PsnTrqBst Ctrl** Position Oriented Torque Boost Control Configuration for the Position Oriented Torque Boost function.		RW	16-bit Integer

Options	Reserved	Reserved	Reserved	Reserved	Reserved	Reserved	Reserved	Reserved	Reserved	Reserved	Reserved	Reserved	Reserved	Reserved	Reserved	Boost Enable
Default	0	0	0	0	0	0	0	0	0	0	0	0	0	0	0	0
Bit	15	14	13	12	11	10	9	8	7	6	5	4	3	2	1	0

0 = Disabled
1 = Enabled

Bit 0 “Boost Enable” – Enables the Position Oriented Torque Boost function.

File	Group	No.	Display Name Full Name Description	Values		Read-Write	Data Type
APPLICATIONS	Torque Boost	**1516**	755 **PsnTrqBst Sts** Position Oriented Torque Boost Status Status of the Position Oriented Torque Boost function. Options: Reserved, Reserved, Reserved, Reserved, Reserved, Reserved, Reserved, Reserved, Reserved, Reserved, Reserved, Reserved, Reserved, Reserved, In Position, Enabled Default: 0 0 0 0 0 0 0 0 0 0 0 0 0 0 0 0 Bit: 15 14 13 12 11 10 9 8 7 6 5 4 3 2 1 0 0 = Disabled 1 = Enabled Bit 0 "Enabled" – Acknowledges that Position Oriented Torque Boost is enabled. Bit 1 "In Position" – Indicates that the selected position reference is in the target range (such as between X1 and X5).			RO	16-bit Integer
		1517	755 **PsnTrqBst RefSel** Position Oriented Torque Boost Reference Select Selects a source data for the position reference.	Default: Min/Max:	1511 0 / 159999	RW	32-bit Integer
		1518	755 **PsnTrqBstPsnOfst** Position Oriented Torque Boost Position Offset Provides position offset, which is summed to the position reference and used to trim the phase of it.	Default: Min/Max:	0 –2147483648 / 2147483647	RW	32-bit Integer
		1519	755 **PsnTrqBst UNWCnt** Position Oriented Torque Boost Unwind Count Sets the number of counts per roll revolution. The selected position reference internally rolls over at this count minus 1.	Default: Min/Max:	4194304 1024 / 2147483647	RW	32-bit Integer
		1520 **1521** **1522** **1523** **1524**	755 **PsnTrqBst Ps X1** 755 **PsnTrqBst Ps X2** 755 **PsnTrqBst Ps X3** 755 **PsnTrqBst Ps X4** 755 **PsnTrqBst Ps X5** Position Oriented Torque Boost Position X*n* The torque/position profile is built by specifying endpoint position counts for X1, X2, X3, X4, and X5, and corresponding per unit torque values for Y2, Y3, and Y4. The torque values corresponding to the points X1 and X5 are zero.	Default: Min/Max:	0 0 / 2147483647	RW	32-bit Integer
		1525 **1526** **1527**	755 **PsnTrqBst Trq Y2** 755 **PsnTrqBst Trq Y3** 755 **PsnTrqBst Trq Y4** Position Oriented Torque Boost Torque Y*n* The position profile from X1 to X5 must be ascending order. The torque profile from Y2 and Y4 is free form with no restriction.	Default: Min/Max:	0.00 –/+2.00	RW	Real
		1528	755 **PsnTrqBst TrqOut** Position Oriented Torque Boost Torque Output Output of the Position Oriented Torque Boost, which is the torque taken from the profile at the position target.	Default: Min/Max:	0.00 –/+2.00	RO	Real

File	Group	No.	Display Name Full Name Description	Values	Read-Write	Data Type
APPLICATIONS	Variable Boost	1535	**VB Config** Variable Boost Configuration Controls the variable boost function.		RO	16-bit Integer

Options	Reserved	Reserved	Reserved	Reserved	Reserved	Reserved	Reserved	Reserved	Reserved	Reserved	Reserved	Minimum Freq	Flux Level	Rising Edge	Current Rate	VB Enable
Default	0	0	0	0	0	0	0	0	0	0	0	0	0	0	0	0
Bit	15	14	13	12	11	10	9	8	7	6	5	4	3	2	1	0

0 = Disabled
1 = Enabled

Bit 0 "VB Enable" – Enables the variable boost voltage function.

Bit 1 "Current Rate" – The current rate trigger condition is defined by the level set in P1550 [VB Cur Thresh] with a hysteresis band of P1549 [VB Current Hyst]. The slope of P1548 [VB Current Rate] is set to either default falling edge or rising edge by Bit 2 "Rising Edge." If these trigger conditions are met, P1536 [VB Status] Bit 3 "Current Trig" is set.

Bit 2 "Rising Edge" – The current rate trigger condition is defined by the level set in P1550 [VB Cur Thresh] with a hysteresis band of 1549 [VB Current Hyst]. The slope of P1548 [VB Current Rate] is set to either default falling edge or rising edge by Bit 2 "Rising Edge." If these trigger conditions are met, P1536 [VB Status] Bit 3 "Current Trig" is set.

Bit 3 "Flux Level" – Sets the flux trigger condition defined by the level of P1545 [VB Flux Thresh]. If P1547 [VB Filt Flux Cur] is greater than or equal to P1545 [VB Flux Thresh], P1536 [VB Status] Bit 4 "Flux Trigger" is set.

Bit 4 "Minimum Freq" – Sets the minimum frequency trigger source derived from P1 [Output Frequency] and is enabled by setting P1535 [VB Config] Bit 4 "Minimum Freq." If P1 [Output Frequency] is less than or equal to P1544 [VB Min Freq], P1536 [VB Status] Bit 5 "Freq Trigger" is set.

		1536	**VB Status** Variable Boost Status Status bits for the variable boost function.		RO	16-bit Integer

Options	Reserved	Reserved	Reserved	Reserved	Reserved	Reserved	Reserved	Reserved	Hold Freq	Max Boost	Freq Trigger	Flux Trigger	Current Trig	Triggered	VB Timer	VB Enabled
Default	0	0	0	0	0	0	0	0	0	0	0	0	0	0	0	0
Bit	15	14	13	12	11	10	9	8	7	6	5	4	3	2	1	0

0 = Condition False
1 = Condition True

Bit 0 "VB Enabled" – The variable boost voltage function is enabled.

Bit 1 "VB Timer" – P1538 [VB Time] has expired.

Bit 2 "Triggered" – Indicates that a trigger function has been enabled by 1535 [VB Config].

Bit 3 "Current Trig" – This trigger condition is defined by P1550 [VB Cur Thresh] with a hysteresis band of P1549 [VB Current Hyst]. The slope of P1548 [VB Current Rate] is set to either default falling edge or rising edge by P1535 [VB Config] Bit 2 "Rising Edge." If these trigger conditions are met, this bit is set.

Bit 4 "Flux Trigger" – This trigger event is enabled by P1535 [VB Config] Bit 3 "Flux Level." The trigger condition is defined by the level P1545 [VB Flux Thresh]. If P1547 [VB Filt Flux Cur] is greater than or equal to P1545 [VB Flux Thresh], P1536 [VB Status] Bit 4 "Flux Trigger" is set.

Bit 5 "Freq Trigger" – This trigger event is enabled when P1 [Output Frequency] is less than or equal to P1544 [VB Min Freq].

Bit 6 "Max Boost" – This trigger event is enabled when P1537 [VB Voltage] reaches P1540 [VB Maximum] before any of the other trigger events cause P1537 [VB Voltage] to ramp down.

Bit 7 "Hold Freq" – Output frequency is being held at P1543 [VB Frequency].

		1537	**VB Voltage** Variable Boost Voltage Displays the output value of the voltage-axis intercept of the V/Hz curve. When the variable boost function is enabled, the value of [VB Voltage] is ramped up/down according to the settings of the variable boost function when the drive is running. This parameter is equal to P60 [Start Acc Boost] and P61 [Run Boost] when the drive is stopped or when P1535 [VB Config] Bit 0 "VB Enable" = 0.	Units: V AC Default: 0.0 Min/Max: 0.0 / 460.0	RO	Real

File	Group	No.	Display Name Full Name Description	Values		Read-Write	Data Type
APPLICATIONS	Variable Boost	1538	**VB Time** Variable Boost Time Sets the time delay for which the variable voltage boost trigger becomes active following a drive start. This parameter begins counting down when the drive enters the run state. Valid trigger conditions may only be met in the time following the expiration of [VB Time] to cause a trigger event. This time delay does not affect the trigger condition associated with P1540 [VB Maximum].	Units: Default: Min/Max:	Secs 1.0 0.0 / 100.0	RW	Real
		1539	**VB Minimum** Variable Boost Minimum Sets the minimum boost voltage level for the variable boost voltage function. If P1537 [VB Voltage] reaches P1540 [VB Maximum] voltage or one of the variable boost voltage trigger events occurs then P1537 [VB Voltage] decelerates at the rate corresponding to P1542 [VB Decel Rate].	Units: Default: Min/Max:	V AC 2.0 0.0 / 200.0	RW	Real
		1540	**VB Maximum** Variable Boost Maximum Sets the maximum boost voltage level for the variable boost voltage function. If P1537 [VB Voltage] reaches [VB Maximum] voltage then [VB Voltage] decelerates at the rate corresponding to P1542 [VB Decel Rate].	Units: Default: Min/Max:	V AC 10.0 0.0 / 200.0	RW	Real
		1541	**VB Accel Rate** Variable Boost Acceleration Rate Sets the rate of acceleration of P1537 [VB Voltage] for the variable boost voltage function.	Units: Default: Min/Max:	V/s 0.75 0.01 / 537.67	RW	Real
		1542	**VB Decel Rate** Variable Boost Deceleration Rate Sets the rate of deceleration of P1537 [VB Voltage] for the variable boost voltage function following a trigger event.	Units: Default: Min/Max:	V/s 6.00 0.01 / 537.67	RW	Real
		1543	**VB Frequency** Variable Boost Frequency Sets the initial frequency reference for the variable boost voltage function.	Units: Default: Min/Max:	Hz 0.8 0.0 / 110.0	RW	Real
		1544	**VB Min Freq** Variable Boost Minimum Frequency Sets the frequency reference trigger level for the variable boost voltage function. P1536 [VB Status] Bit 5 “Freq Trigger” is set to 1 when P1 [Output Frequency] falls below [VB Min Freq]. To enable this threshold and trigger event: Set P1535 [VB Config] Bit 0 “VB Enable” to 1 and Bit 4 “Minimum Freq” to 1.	Units: Default: Min/Max:	Hz 0.5 0.0 / 110.0	RW	Real
		1545	**VB Flux Thresh** Variable Boost Flux Threshold Sets the flux current trigger level for the variable boost voltage function. P1536 [VB Status] Bit 4 “Flux Trigger” is set to 1 when P1547 [VB Filt Flux Cur] exceeds [VB Flux Thresh]. To enable this threshold and trigger event: Set P1535 [VB Config] Bit 0 “VB Enable” to 1 and Bit 3 “Flux Level” to 1.	Units: Default: Min/Max:	Amps P21 [Rated Amps] x 0.5 0.0 / P21 [Rated Amps]	RW	Real
		1546	**VB Flux Lag Freq** Variable Boost Flux Lag Frequency Sets the lag (cutoff) frequency of the P6 [Flux Cur Fdbk] low pass filter. The output of this filter is displayed in P1547 [VB Filt Flux Cur].	Units: Default: Min/Max:	R/S 0.60 0.01 / 100.00	RW	Real
		1547	**VB Filt Flux Cur** Variable Boost Filter Flux Current Filtered version of the P6 [Flux Cur Fdbk]. P1546 [VB Flux Lag Freq] sets the cutoff frequency of the low pass filter.	Units: Default: Min/Max:	Amps 0.0 0.0 / P21 [Rated Amps] x 2	RO	Real

File	Group	No.	Display Name Full Name Description	Values		Read-Write	Data Type
APPLICATIONS	Variable Boost	**1548**	**VB Current Rate** Variable Boost Current Rate Output current rate of change.	Default: Min/Max:	0.0 –/+1000.0	RO	Real
		1549	**VB Current Hyst** Variable Boost Current Hysteresis Sets the hysteresis level around P1550 [VB Cur Thresh] for the variable boost voltage function.	Default: Min/Max:	0.0 –/+100.0	RW	Real
		1550	**VB Cur Thresh** Variable Boost Current Threshold Sets the P1548 [VB Current Rate] trigger level for the variable boost voltage function. The trigger is not active until P1538 [VB Time] time has expired following a drive start. P1535 [VB Config] Bit 2 "Rising Edge" = 0: The value of [VB Current Rate] must first pass through [VB Cur Thresh] + P1549 [VB Current Hyst] then [VB Cur Thresh] in order to cause a boost voltage trigger event. P1535 [VB Config] Bit 2 "Rising Edge" = 1: The value of P1548 [VB Current Rate] must first pass through [VB Cur Thresh] - P1549 [VB Current Hyst] then [VB Cur Thresh] in order to cause a boost voltage trigger event.	Default: Min/Max:	–25.0 –/+1000.0	RW	Real
		1551	**VB Rate Lag Freq** Variable Boost Rate Lag Frequency Sets the lag (cutoff) frequency of the current magnitude low pass filter. The output of this filter is displayed in P1548 [VB Current Rate].	Units: Default: Min/Max:	R/S 2.60 0.01 / 100.00	RW	Real

		1560	See page 137 for parameters numbers 1560…1567.

File	Group	No.	Display Name Full Name Description	Values	Read-Write	Data Type
APPLICATIONS	Spindle Orient		**Important:** After the Spindle Orient group is set up for an application, any subsequent changes to parameter settings will require a drive reset for the changes to take affect.			
		1580	755 **SO Config** Spindle Orientation Configuration Configures the options for the Spindle Orientation function. Function requires P35 [Motor Ctrl Mode] is set to option 3 "Induction FV," 6 "PM FV," or 10 "IPM FV." P125 [Pri Vel Fdbk Sel] and P135 [Psn Fdbk Sel] must also be set up accordingly.		RW	16-bit Integer

Options	Reserved	Reserved	Reserved	Reserved	Reserved	Reserved	Reserved	Reserved	Reserved	Reserved	Reserved	Scale Invert	ShortestPath	Recap Hm Psn	Home DI Inv	Home DI
Default	0	0	0	0	0	0	0	0	0	0	0	0	0	0	0	0
Bit	15	14	13	12	11	10	9	8	7	6	5	4	3	2	1	0

0 = Disabled
1 = Enabled

Bit 0 "Home DI" – Selects the type of Homing signal (Marker Pulse vs. Digital Input Switch). 1 = Home signal. 0 = Z Channel.
Bit 1 "Home DI Inv" – Rising/Falling Edge of Homing Input.
Bit 2 "Recap Hm Psnv" – Re-capture Home Position. Allows the drive to find Home after a power or drive reset. Typically set to 1 "Enabled."
Bit 3 "ShortestPath" – Allow direction reversal to obtain shortest distance traveled.
Bit 4 "Scale Invert" – Inverts the calculation for the user-defined units value. This improves resolution as the value of P1587 [SO Cnts per Rvls] increases.

File	Group	No.	Display Name Full Name Description	Values		Read-Write	Data Type
APPLICATIONS	Spindle Orient	**1581**	755 **SO Status** Spindle Orientation Status Indicates status of spindle orientation logic. Options: Reserved, Reserved, Reserved, Reserved, Reserved, Reserved, Reserved, Reserved, Reserved, Reserved, Reserved, Reserved, Reserved, Orient Cplt, Mode, At SO Speed Default: 0 0 0 0 0 0 0 0 0 0 0 0 0 0 0 0 Bit: 15 14 13 12 11 10 9 8 7 6 5 4 3 2 1 0 0 = Disabled 1 = Enabled Bit 0 "At SO Speed" – Drive running at Spindle Orientation velocity. Bit 1 "Mode" – Drive in Spindle Orientation mode. Bit 2 "Orient Cplt" – In selected Spindle Orientation position.			RO	16-bit Integer
		1582	755 **SO Setpoint** Spindle Orientation Setpoint Sets the desired Spindle Orientation Position in user-defined units. Can use the value of P1590 [SO Unit Out] if an offset other than zero is required.	Default: Min/Max:	0.00 0.00 / 536870912.00	RW	Real
		1583	755 **SO Offset** Spindle Orientation Offset Sets the offset encoder counts for the Home position. This value is loaded automatically when the Homing function is run (typically after power up).	Default: Min/Max:	0 –/+536870912	RW	32-bit Integer
		1584	755 **SO EPR Input** Spindle Orientation Edges Per Revolution Input Indicates the edges per revolution of the encoder. For example a 1024 quad encoder equals 4096 (4 x 1024).	Default: Min/Max:	4096 1 / 67108864	RW	32-bit Integer
		1585	755 **SO Rvls Input** Spindle Orientation Revolutions Input Sets the revolutions of the input gear relative to the output gear (**14**:1).	Default: Min/Max:	1.00 –/+1000000.00	RW	Real
		1586	755 **SO Rvls Output** Spindle Orientation Revolutions Output Sets the revolutions of the output gear relative to the input gear (14:**1**).	Default: Min/Max:	1.00 1.00 / 2000000.00	RW	Real
		1587	755 **SO Cnts per Rvls** Spindle Orientation Counts Per Revolution Sets the counts per revolution of the output gear. Typically P1584 [SO EPR Input] x Gear Ratio.	Default: Min/Max:	4096 1024 / 536870912	RW	32-bit Integer
		1588	755 **SO Unit Scale** Spindle Orientation Unit Scale Scales P1589 [SO Position Out] to user-defined units. Typically set to Desired Units/P1587 [SO Cnts per Rvls].	Default: Min/Max:	1.00000 –/+220000000.00000	RW	Real
		1589	755 **SO Position Out** Spindle Orientation Position Output Displays the present position of the output gear in encoder counts.	Default: Min/Max:	0 0 / 4294967295	RO	32-bit Integer
		1590	755 **SO Unit Out** Spindle Orientation Unit Output Displays the present position of the output gear in user-scaled units.	Default: Min/Max:	0.00 –/+220000000.00	RO	Real
		1591	755 **SO Accel Time** Spindle Orientation Acceleration Time Sets the acceleration rate used during positioning.	Units: Default: Min/Max:	Secs 10.00 0.00 / 3600.00	RW	Real

File	Group	No.	Display Name Full Name Description	Values		Read-Write	Data Type
APPLICATIONS	Spindle Orient	1592	755 **SO Decel Time** Spindle Orientation Deceleration Time Sets the deceleration rate used during positioning.	Units: Default: Min/Max:	Secs 10.00 0.00 / 3600.00	RW	Real
		1593	755 **SO Fwd Vel Lmt** Spindle Orientation Forward Velocity Limit Sets the forward speed used during positioning.	Units: Default: Min/Max:	Hz / RPM 30.00 0.00 / 40000.00	RW	Real
		1594	755 **SO Rev Vel Lmt** Spindle Orientation Reverse Velocity Limit Sets the reverse speed used during positioning.	Units: Default: Min/Max:	Hz / RPM –30.00 –40000.00 / 0.00	RW	Real

File	Group	No.	Display Name Full Name Description	Values		Read-Write	Data Type
APPLICATIONS	Id Compensation	1600	755 **Id Comp Enbl** Id Compensation Enable Enables or disables the Id compensation calculation. This selection is active only in motor control mode flux vector induction (P35 [Motor Ctrl Mode] = 3 "Induction FV").	Default: Options:	0 = "Disable" 0 = "Disable" 1 = "Enable"	RW	32-bit Integer
		1601	755 **Id Comp Mtrng 1** Id Compensation Motoring 1 Sets Id compensation value (in p.u.) at Iq = P1602 [IdCompMtrng 1 Iq] (in p.u.) for motoring operation. Id compensation = [Id Comp Mtrng 1] x IqCmd (in p.u.) for IqCmd = between 0 and P1602 [IdCompMtrng 1 Iq]. 1.0 p.u. is scaled to the motor rated current. This parameter is active only in motor control mode flux vector induction (P35 [Motor Ctrl Mode] = 3 "Induction FV").	Default: Min/Max:	0.0000 –/+1.0000	RW	Real
		1602	755 **IdCompMtrng 1 Iq** Id Compensation Motoring 1 Iq Sets Iq value (in p.u.) at which P1601 [Id Comp Mtrng 1] (in p.u.) is specified. This parameter is active only in motor control mode flux vector induction (P35 [Motor Ctrl Mode] = 3 "Induction FV").	Default: Min/Max:	0.2500 0.0000 / 5.0000	RW	Real
		1603	755 **Id Comp Mtrng 2** Id Compensation Motoring 2 Sets Id compensation value (in p.u.) at Iq = P1604 [IdCompMtrng 2 Iq] (in p.u.) for motoring operation. Id compensation = P1601 [Id Comp Mtrng 1] + (Id Comp Mtrng 2 – Id Comp Mtrng 1) x (IqCmd - IdCompMtrng 1 Iq) x 1/(IdCompMtrng 2 Iq – IdCompMtrng 1 Iq) for IqCmd = between IdCompMtrng 1 Iq and IdCompMtrng 2 Iq. 1.0 p.u. is scaled to the motor rated current. This parameter is active only in motor control mode flux vector induction (P35 [Motor Ctrl Mode] = 3 "Induction FV").	Default: Min/Max:	0.0000 –/+1.0000	RW	Real
		1604	755 **IdCompMtrng 2 Iq** Id Compensation Motoring 2 Iq Sets Iq value (in p.u.) at which P1603 [Id Comp Mtrng 2] (in p.u.) is specified. This parameter is active only in motor control mode flux vector induction (P35 [Motor Ctrl Mode] = 3 "Induction FV").	Default: Min/Max:	0.5000 0.0000 / 5.0000	RW	Real
		1605	755 **Id Comp Mtrng 3** Id Compensation Motoring 3 Sets Id compensation value (in p.u.) at Iq = P1606 [IdCompMtrng 3 Iq] (in p.u.) for motoring operation. Id compensation = Id Comp Mtrng 2 + (Id Comp Mtrng 3 – Id Comp Mtrng 2) x (IqCmd – IdCompMtrng 2 Iq) x 1/(IdCompMtrng 3 Iq – IdCompMtrng 2 Iq) for IqCmd = between IdCompMtrng 2 Iq and IdCompMtrng 3 Iq. 1.0 p.u. is scaled to the motor rated current. This parameter is active only in motor control mode flux vector induction (P35 [Motor Ctrl Mode] = 3 "Induction FV").	Default: Min/Max:	0.0000 –/+1.0000	RW	Real

File	Group	No.	Display Name Full Name Description	Values		Read-Write	Data Type
APPLICATIONS	Id Compensation	1606	755 **IdCompMtrng 3 Iq** Id Compensation Motoring 3 Iq Sets Iq value (in p.u.) at which P1605 [Id Comp Mtrng 3] (in p.u.) is specified. This parameter is active only in motor control mode flux vector induction (P35 [Motor Ctrl Mode] = 3 "Induction FV").	Default: Min/Max:	0.7500 0.0000 / 5.0000	RW	Real
		1607	755 **Id Comp Mtrng 4** Id Compensation Motoring 4 Sets Id compensation value (in p.u.) at Iq = P1608 [IdCompMtrng 4 Iq] (in p.u.) for motoring operation. Id compensation = Id Comp Mtrng 3 + (Id Comp Mtrng 4 – Id Comp Mtrng 3) x (IqCmd – IdCompMtrng 3 Iq) x 1/(IdCompMtrng 4 Iq – IdCompMtrng 3 Iq) for IqCmd = between IdCompMtrng 3 Iq and IdCompMtrng 4 Iq. 1.0 p.u. is scaled to the motor rated current. This parameter is active only in motor control mode flux vector induction (P35 [Motor Ctrl Mode] = 3 "Induction FV").	Default: Min/Max:	0.0000 –/+1.0000	RW	Real
		1608	755 **IdCompMtrng 4 Iq** Id Compensation Motoring 4 Iq Sets Iq value (in p.u.) at which P1607 [Id Comp Mtrng 4] (in p.u.) is specified. This parameter is active only in motor control mode flux vector induction (P35 [Motor Ctrl Mode] = 3 "Induction FV").	Default: Min/Max:	1.0000 0.0000 / 5.0000	RW	Real
		1609	755 **Id Comp Mtrng 5** Id Compensation Motoring 5 Sets Id compensation value (in p.u.) at Iq = P1610 [IdCompMtrng 5 Iq] (in p.u.) for motoring operation. Id compensation = Id Comp Mtrng 4 + (Id Comp Mtrng 5 – Id Comp Mtrng 4) x (IqCmd – IdCompMtrng 4 Iq) x 1/(IdCompMtrng 5 Iq – IdCompMtrng 4 Iq) for IqCmd = between IdCompMtrng 4 Iq and IdCompMtrng 5 Iq. 1.0 p.u. is scaled to the motor rated current. This parameter is active only in motor control mode flux vector induction (P35 [Motor Ctrl Mode] = 3 "Induction FV").	Default: Min/Max:	0.0000 –/+1.0000	RW	Real
		1610	755 **IdCompMtrng 5 Iq** Id Compensation Motoring 5 Iq Sets Iq value (in p.u.) at which P1609 [Id Comp Mtrng 5] (in p.u.) is specified. This parameter is active only in motor control mode flux vector induction (P35 [Motor Ctrl Mode] = 3 "Induction FV").	Default: Min/Max:	1.2500 0.0000 / 5.0000	RW	Real
		1611	755 **Id Comp Mtrng 6** Id Compensation Motoring 6 Sets Id compensation value (in p.u.) at Iq = P1612 [IdCompMtrng 6 Iq] (in p.u.) for motoring operation. Id compensation = Id Comp Mtrng 5 + (Id Comp Mtrng 6 – Id Comp Mtrng 5) x (IqCmd – IdCompMtrng 5 Iq) x 1/(IdCompMtrng 6 Iq – IdCompMtrng 5 Iq) for IqCmd = between IdCompMtrng 5 Iq and IdCompMtrng 6 Iq. 1.0 p.u. is scaled to the motor rated current. This parameter is active only in motor control mode flux vector induction (P35 [Motor Ctrl Mode] = 3 "Induction FV").	Default: Min/Max:	0.0000 –/+1.0000	RW	Real
		1612	755 **IdCompMtrng 6 Iq** Id Compensation Motoring 6 Iq Sets Iq value (in p.u.) at which P1611 [Id Comp Mtrng 6] (in p.u.) is specified. This parameter is active only in motor control mode flux vector induction (P35 [Motor Ctrl Mode] = 3 "Induction FV").	Default: Min/Max:	1.5000 0.0000 / 5.0000	RW	Real
		1613	755 **Id Comp Regen 1** Id Compensation Regen 1 Sets Id compensation value (in p.u.) at P1614 Iq = IdCompRegen 1 Iq (in p.u.) for regenerative operation. Id compensation = Id Comp Regen 1 x IqCmd (in p.u.) for IqCmd = between 0 and IdCompRegen 1 Iq. 1.0 p.u. is scaled to the motor rated current. This parameter is active only in motor control mode flux vector induction (P35 [Motor Ctrl Mode] = 3 "Induction FV").	Default: Min/Max:	0.0000 –/+1.0000	RW	Real

File	Group	No.	Display Name Full Name Description	Values		Read-Write	Data Type
APPLICATIONS	Id Compensation	1614	755 **IdCompRegen 1 Iq** Id Compensation Regen 1 Iq Sets Iq value (in p.u.) at which P1613 Id Comp Regen 1 (in p.u.) is specified. This parameter is active only in motor control mode flux vector induction (P35 [Motor Ctrl Mode] = 3 "Induction FV").	Default: Min/Max:	0.2500 0.0000 / 5.0000	RW	Real
		1615	755 **Id Comp Regen 2** Id Compensation Regen 2 Sets Id compensation value (in p.u.) at Iq = P1616 [IdCompRegen 2 Iq] (in p.u.) for regenerative operation. Id compensation = Id Comp Regen 1 + (Id Comp Regen 2 – Id Comp Regen 1) x (IqCmd – IdCompRegen 1 Iq) x 1/(IdCompRegen 2 Iq – IdCompRegen 1 Iq) for IqCmd = between IdCompRegen 1 Iq and IdCompRegen 2 Iq. This parameter is active only in motor control mode flux vector induction (P35 [Motor Ctrl Mode] = 3 "Induction FV").	Default: Min/Max:	0.0000 –/+1.0000	RW	Real
		1616	755 **IdCompRegen 2 Iq** Id Compensation Regen 2 Iq Sets Iq value (in p.u.) at which P1615 [Id Comp Regen 2] (in p.u.) is specified. This parameter is active only in motor control mode flux vector induction (P35 [Motor Ctrl Mode] = 3 "Induction FV").	Default: Min/Max:	0.5000 0.0000 / 5.0000	RW	Real
		1617	755 **Id Comp Regen 3** Id Compensation Regen 3 Sets Id compensation value (in p.u.) at Iq = P1618 [IdCompRegen 3 Iq] (in p.u.) for regenerative operation. Id compensation = Id Comp Regen 2 + (Id Comp Regen 3 – Id Comp Regen 2) x (IqCmd – IdCompRegen 2 Iq) x 1/(IdCompRegen 3 Iq – IdCompRegen 2 Iq) for IqCmd = between IdCompRegen 2 Iq and IdCompRegen 3 Iq. This parameter is active only in motor control mode flux vector induction (P35 [Motor Ctrl Mode] = 3 "Induction FV").	Default: Min/Max:	0.0000 –/+1.0000	RW	Real
		1618	755 **IdCompRegen 3 Iq** Id Compensation Regen 3 Iq Sets Iq value (in p.u.) at which P1617 [Id Comp Regen 3] (in p.u.) is specified. This parameter is active only in motor control mode flux vector induction (P35 [Motor Cntrl Mode] = 3 "Induction FV").	Default: Min/Max:	0.7500 0.0000 / 5.0000	RW	Real
		1619	755 **Id Comp Regen 4** Id Compensation Regen 4 Sets Id compensation value (in p.u.) at Iq = P1620 [IdCompRegen 4 Iq] (in p.u.) for regenerative operation. Id compensation = Id Comp Regen 3 + (Id Comp Regen 4 – Id Comp Regen 3) x (IqCmd – IdCompRegen 3 Iq) x 1/(IdCompRegen 4 Iq – IdCompRegen 3 Iq) for IqCmd = between IdCompRegen 3 Iq and IdCompRegen 4 Iq. This parameter is active only in motor control mode flux vector induction (P35 [Motor Ctrl Mode] = 3 "Induction FV").	Default: Min/Max:	0.0000 –/+1.0000	RW	Real
		1620	755 **IdCompRegen 4 Iq** Id Compensation Regen 4 Iq Sets Iq value (in p.u). at which P1619 [Id Comp Regen 4] (in p.u.) is specified. This parameter is active only in motor control mode flux vector induction (P35 [Motor Ctrl Mode] = 3 "Induction FV").	Default: Min/Max:	1.0000 0.0000 / 5.0000	RW	Real
		1621	755 **Id Comp Regen 5** Id Compensation Regen 5 Sets Id compensation value (in p.u.) at Iq = P1622 [IdCompRegen 5 Iq] (in p.u.) for regenerative operation. Id compensation = Id Comp Regen 4 + (Id Comp Regen 5 – Id Comp Regen 4) x (IqCmd – IdCompRegen 4 Iq) x 1/(IdCompRegen 5 Iq – IdCompRegen 4 Iq) for IqCmd = between IdCompRegen 4 Iq and IdCompRegen 5 Iq. This parameter is active only in motor control mode flux vector induction (P35 [Motor Ctrl Mode] = 3 "Induction FV").	Default: Min/Max:	0.0000 –/+1.0000	RW	Real
		1622	755 **IdCompRegen 5 Iq** Id Compensation Regen 5 Iq Sets Iq value (in p.u.) at which P1621 [Id Comp Regen 5] (in p.u.) is specified. This parameter is active only in motor control mode flux vector induction (P35 [Motor Ctrl Mode] = 3 "Induction FV").	Default: Min/Max:	1.2500 0.0000 / 5.0000	RW	Real

File	Group	No.	Display Name Full Name Description	Values		Read-Write	Data Type
APPLICATIONS	Id Compensation	1623	755 **Id Comp Regen 6** Id Compensation Regen 6 Sets Id compensation value (in p.u.) at Iq = P1624 [IdCompRegen 6 Iq] (in p.u.) for regenerative operation. Id compensation = Id Comp Regen 5 + (Id Comp Regen 6 – Id Comp Regen 5) x (IqCmd - IdCompRegen 5 Iq) x 1/(IdCompRegen 6 Iq – IdCompRegen 5 Iq) for IqCmd = between IdCompRegen 5 Iq and IdCompRegen 6 Iq. This parameter is active only in motor control mode flux vector induction (P35 [Motor Ctrl Mode] = 3 "Induction FV").	Default: Min/Max:	0.0000 –/+1.0000	RW	Real
		1624	755 **IdCompRegen 6 Iq** Id Compensation Regen 6 Iq Sets Iq value (in p.u.) at which P1623 [Id Comp Regen 6] (in p.u.) is specified. This parameter is active only in motor control mode flux vector induction (P35 [Motor Ctrl Mode] = 3 "Induction FV").	Default: Min/Max:	1.5000 0.0000 / 5.0000	RW	Real

		1629	See page 69 for parameter numbers 1629 and 1637…1645.
		1630	See page 66 for parameter numbers 1630…1636, 1646, and 1647.
		1648	See page 60 for parameter numbers 1648…1662

		1700	See page 160 for parameter numbers 1700…1731.
		1800	See page 160 for parameter numbers 1800…1831.
		1900	See page 160 for parameter numbers 1900, 1904, 1908, 1912, 1916, 1920, 1924, and 1928.
		1901	See page 160 for parameter numbers 1901, 1905, 1909, 1913, 1917, 1921, 1925, and 1929.
		1902	See page 160 for parameter numbers 1902, 1906, 1910, 1914, 1918, 1922, 1926, and 1930.
		1903	See page 160 for parameter numbers 1903, 1907, 1911, 1915, 1919, 1923, 1927, and 1931.

Port 10 and Port 11 Parameters

This chapter lists and describes the PowerFlex 750-Series Port 10 and 11 drive parameters. The parameters can be programmed (viewed/edited) using a Human Interface Module (HIM). Refer to PowerFlex 20-HIM-A6 and 20-HIM-C6S HIM (Human Interface Module) User Manual, publication 20HIM-UM001, for information on using the HIM to view and edit parameters. As an alternative, programming can also be performed using DriveTools™ software and a personal computer.

Topic	Page
Inverter (Port 10) Common Parameters	222
Inverter n (Port 10) Parameters	224
Converter (Port 11) Common Parameters	227
Converter n (Port 11) Parameters	229
Precharge (Port 11) Common Parameters	232
Precharge n (Port 11) Parameters	234

Inverter (Port 10) Common Parameters

Inverter Common parameters apply only to PowerFlex 755 Frame 8 and larger drives.

File	Group	No.	Display Name Full Name Description	Values		Read-Write	Data Type
INVERTER COMMON	System Ratings	1	755 (8+) **Sys Rated Amps** System Rated Amps Displays the continuous current rating of the drive. This parameter is the same value as displayed in P21 [Rated Amps] for the drive at Port 0.	Units: Default: Min/Max:	Amps 0.00 0.00 / Dependent on Frame Rating	RO	Real
		2	755 (8+) **Sys Rated Volts** System Rated Volts Input voltage class (400, 480, 600, 690, etc) of the drive. This parameter is the same value as displayed in P20 [Rated Volts] for the drive at Port 0.	Units: Default: Min/Max:	V AC 0.00 0.00 / 690.00	RO	Real
		3 4 5	755 (8+) **I1 Rated Amps** 755 (8+) **I2 Rated Amps** 755 (8+) **I3 Rated Amps** Inverter *n* Rated Amps Continuous current rating of inverter *n*. The continuous current rating varies based on the value of P305 [Voltage Class] and P306 [Duty Rating] for the drive at Port 0.	Units: Default: Min/Max:	Amps 0.00 0.00 / 1000.00	RO	Real
		21	755 (8+) **Effctv I Rating** Effective Inverter Rating Sets the effective inverter current rating. During N-1 operation, the effective inverter current rating is reduced from P21 [Rated Amps].	Units: Default: Min/Max:	Amps 0.0 0.0 / Dependent on Frame Rating	RO	Real

File	Group	No.	Display Name Full Name Description	Values	Read-Write	Data Type
INVERTER COMMON	Status	10	755 (8+) **Online Status** Online Status Indicates whether the inverter has successfully established fiber optic communications with the main control board.		RO	16-bit Integer

Options	Reserved	Reserved	Reserved	Reserved	Reserved	Reserved	Reserved	Reserved	Reserved	Reserved	Reserved	Reserved	Reserved	Reserved	Inverter 2	Inverter 1
Default	0	0	0	0	0	0	0	0	0	0	0	0	0	0	0	0
Bit	15	14	13	12	11	10	9	8	7	6	5	4	3	2	1	0

0 = Not Active
1 = Active

File	Group	No.	Display Name Full Name Description	Values	Read-Write	Data Type
INVERTER COMMON	Status	12	755 (8+) **Fault Status** Fault Status Indicates whether the inverter has a fault condition. See P105 [I1 Fault Status] to view which fault conditions currently exist for inverter 1. Refer to Chapter 6 for information on fault and alarm codes.		RO	16-bit Integer

Options	Reserved	Reserved	Reserved	Reserved	Reserved	Reserved	Reserved	Reserved	Reserved	Reserved	Reserved	Reserved	Reserved	Reserved	Inverter 2	Inverter 1
Default	0	0	0	0	0	0	0	0	0	0	0	0	0	0	0	0
Bit	15	14	13	12	11	10	9	8	7	6	5	4	3	2	1	0

0 = Not Faulted
1 = Faulted

File	Group	No.	Display Name Full Name Description	Values	Read-Write	Data Type
INVERTER COMMON	Status	13	755 (8+) **Alarm Status** Alarm Status Indicates whether the inverter has an alarm condition. See P107 [I1 Alarm Status] to view which alarms currently exist for inverter 1. Refer to Chapter 6 for information on fault and alarm codes.		RO	16-bit Integer

Options	Reserved	Reserved	Reserved	Reserved	Reserved	Reserved	Reserved	Reserved	Reserved	Reserved	Reserved	Reserved	Reserved	Reserved	Inverter 2	Inverter 1
Default	0	0	0	0	0	0	0	0	0	0	0	0	0	0	0	0
Bit	15	14	13	12	11	10	9	8	7	6	5	4	3	2	1	0

0 = No Alarm
1 = Alarm

File	Group	No.	Display Name Full Name Description	Values		Read-Write	Data Type
INVERTER COMMON	Metering	18	755 (8+) **Ground Current** Ground Current Ground current of AC output to a motor. This value is calculated based on the total output currents (U, V, and W phases of the drive). When the three phases are balanced, the ground current is ideally close to zero.	Units: Default: Min/Max:	Amps 0.0 0.0 / 5000.0	RO	Real

File	Group	No.	Display Name Full Name Description	Values		Read-Write	Data Type
INVERTER COMMON	Configuration	20	755 (8+) **Recfg Acknowledg** Reconfiguration Acknowledgement Acknowledge drive re-configuration for N-1 operation or drive rating change. Set to 1 "Acknowledge" (1) – Clears fault F361 "N-1 See Manual" and fault F362 "Rerate See Manual."	Default: Options:	0 = "Ready" 0 = "Ready" 1 = "Acknowledge"	RW	32-bit Integer

		21	See page 222.

File	Group	No.	Display Name Full Name Description	Values		Read-Write	Data Type
INVERTER COMMON	Testpoints	30 32	755 (8+) **Testpoint Sel 1** 755 (8+) **Testpoint Sel 2** Testpoint Selection 1, 2 Selects a source for [Testpoint Val *n*]. Used by the factory, typically for diagnostic purposes.	Default: Min/Max:	0 0 / 65535	RW	32-bit Integer
		31 33	755 (8+) **Testpoint Val 1** 755 (8+) **Testpoint Val 2** Testpoint Value 1, 2 Displays data selected by [Testpoint Sel *n*].	Default: Min/Max:	0.000000 –/+220000000.000000	RO	Real

Inverter *n* (Port 10) Parameters

Inverter *n* parameters apply only to PowerFlex 755 Frame 8 and larger drives.

File	Group	No.	Display Name Full Name Description	Values	Read-Write	Data Type
INVERTER N	Status	105 205 305	755 (8+) **I1 Fault Status** 755 (8+) **I2 Fault Status** 755 (8+) **I3 Fault Status** Inverter *n* Fault Status Indicates which fault conditions currently exist for inverter *n*. Refer to Chapter 6 - Inverter (Port 10) Faults and Alarms (Frame 8 and Larger) for information on these fault codes.		RO	32-bit Integer

Options	Reserved	Reserved	WBrd Fault	VBrd Fault	UBrd Fault	Incompat PS	DC Bus Imbal	Incomp Brdn	Incomp WBrd	Incomp VBrd	Incomp UBrd	NTC Open	PSBrdOvrTemp	PLI OvrTemp	CT Harness	SysPSOverCur	Sys PS Low	IPwrIF PSLow	Main PS Low	HS OvrTemp	IGBT OvrTemp	Ground Fault	Bus Overvolt	Overcur WNeg	Overcur WPos	Overcur VNeg	Overcur VPos	Overcur UNeg	Overcur UPos	ThermalConst	Comm Loss	Fault Q Full
Default	0	0	0	0	0	0	0	0	0	0	0	0	0	0	0	0	0	0	0	0	0	0	0	0	0	0	0	0	0	0	0	0
Bit	31	30	29	28	27	26	25	24	23	22	21	20	19	18	17	16	15	14	13	12	11	10	9	8	7	6	5	4	3	2	1	0

0 = No Fault
1 = Fault

File	Group	No.	Display Name Full Name Description	Values	Read-Write	Data Type
INVERTER N	Status	107 207 307	755 (8+) **I1 Alarm Status** 755 (8+) **I2 Alarm Status** 755 (8+) **I3 Alarm Status** Inverter *n* Alarm Status Indicates which alarm conditions currently exist for inverter *n*. Refer to Chapter 6 - Inverter (Port 10) Faults and Alarms (Frame 8 and Larger) for information on these alarm codes.		RO	32-bit Integer

Options	Reserved	Reserved	Reserved	Reserved	Reserved	Reserved	Reserved	Reserved	Reserved	Reserved	Reserved	Reserved	Reserved	Reserved	Reserved	Reserved	Reserved	Reserved	Reserved	HSFan Slow	HSFan PS Low	Cur Offset W	Cur Offset V	Cur Offset U	Reserved	HS OvrTemp	IGBT OvrTemp	DC Bus Imbal	InFan2 Slow	InFan1 Slow	Sys PS Low	Reserved
Default	0	0	0	0	0	0	0	0	0	0	0	0	0	0	0	0	0	0	0	0	0	0	0	0	0	0	0	0	0	0	0	0
Bit	31	30	29	28	27	26	25	24	23	22	21	20	19	18	17	16	15	14	13	12	11	10	9	8	7	6	5	4	3	2	1	0

0 = No Alarm
1 = Alarm

File	Group	No.	Display Name Full Name Description	Values		Read-Write	Data Type
INVERTER N	Metering	115 215 315	755 (8+) **I1 U Phase Curr** 755 (8+) **I2 U Phase Curr** 755 (8+) **I3 U Phase Curr** Inverter *n* U Phase Current Output current present through terminal T1 (U phase) of inverter *n*.	Units: Default: Min/Max:	Amps 0.0 –/+3000.0	RO	Real
		116 216 316	755 (8+) **I1 V Phase Curr** 755 (8+) **I2 V Phase Curr** 755 (8+) **I3 V Phase Curr** Inverter *n* V Phase Current Output current present through terminal T2 (V phase) of inverter *n*.	Units: Default: Min/Max:	Amps 0.0 –/+3000.0	RO	Real
		117 217 317	755 (8+) **I1 W Phase Curr** 755 (8+) **I2 W Phase Curr** 755 (8+) **I3 W Phase Curr** Inverter *n* W Phase Current Output current present through terminal T3 (W phase) of inverter *n*.	Units: Default: Min/Max:	Amps 0.0 –/+3000.0	RO	Real
		118 218 318	755 (8+) **I1 Gnd Current** 755 (8+) **I2 Gnd Current** 755 (8+) **I3 Gnd Current** Inverter *n* Ground Current Ground current of the AC output to a motor. The value is calculated based on the output currents (U, V, and W phases) for inverter *n*. When the three phases are balanced, the ground current is ideally close to zero.	Units: Default: Min/Max:	Amps 0.0 –/+3000.0	RO	Real
		119 219 319	755 (8+) **I1 DC Bus Volt** 755 (8+) **I2 DC Bus Volt** 755 (8+) **I3 DC Bus Volt** Inverter *n* DC Bus Voltage DC bus voltage measured by inverter *n*.	Units: Default: Min/Max:	V DC 0.00 0.00 / 1200.00	RO	Real
		120 220 320	755 (8+) **I1 Heatsink Temp** 755 (8+) **I2 Heatsink Temp** 755 (8+) **I3 Heatsink Temp** Inverter *n* Heatsink Temperature Temperature of the heatsink for inverter *n*.	Units: Default: Min/Max:	DegC 0.0 –/+200.0	RO	Real
		121 221 321	755 (8+) **I1 IGBT Temp** 755 (8+) **I2 IGBT Temp** 755 (8+) **I3 IGBT Temp** Inverter *n* IGBT Temperature IGBT junction temperature of inverter *n*.	Units: Default: Min/Max:	DegC 0.0 –/+200.0	RO	Real
		124 224 324	755 (8+) **I1 HSFan Speed** 755 (8+) **I2 HSFan Speed** 755 (8+) **I3 HSFan Speed** Inverter *n* Heatsink Fan Speed The measured speed of the heatsink fan for inverter *n*.	Units: Default: Min/Max:	RPM 0.0 0.0 / 7200.0	RO	Real
		125 225 325	755 (8+) **I1 InFan 1 Speed** 755 (8+) **I2 InFan 1 Speed** 755 (8+) **I3 InFan 1 Speed** Inverter *n* Internal Fan 1 Speed The measured speed of the capacitor bank internal stirring fan 1 for inverter *n*.	Units: Default: Min/Max:	RPM 0.0 0.0 / 7200.0	RO	Real
		126 226 326	755 (8+) **I1 InFan 2 Speed** 755 (8+) **I2 InFan 2 Speed** 755 (8+) **I3 InFan 2 Speed** Inverter *n* Internal Fan 2 Speed The measured speed of the capacitor bank internal stirring fan 2 for inverter *n*.	Units: Default: Min/Max:	RPM 0.0 0.0 / 7200.0	RO	Real

File	Group	No.	Display Name Full Name Description	Values		Read-Write	Data Type
INVERTER N	Predictive Main	127 227 327	755 (8+) **I1 PredMainReset** 755 (8+) **I2 PredMainReset** 755 (8+) **I3 PredMainReset** Inverter *n* Predictive Maintenance Reset Allows a reset of the elapsed run time to zero for either the heatsink fan or internal stirring fans for inverter *n*. After the time has been reset, the value of this parameter returns to 0 "Ready." "Hs Fan Life" (1) – Resets the elapsed run time (displayed in [I*n* HSFanElpsdLif]) for the heatsink fan on inverter *n* to zero. "In Fan Life" (2) – Resets the elapsed run time (displayed in [I*n* InFanElpsdLif]) for the internal stirring fans on inverter *n* to zero.	Default: Options:	0 = "Ready" 0 = "Ready" 1 = "HS Fan Life" 2 = "In Fan Life"	RW	32-bit Integer
		128 228 328	755 (8+) **I1 HSFanElpsdLif** 755 (8+) **I2 HSFanElpsdLif** 755 (8+) **I3 HSFanElpsdLif** Inverter *n* Heatsink Fan Elapsed Life The amount of time the heat sink fan on inverter *n* has been running. This value can be reset using [I*n* PredMainReset].	Units: Default: Min/Max:	Hrs 0.00 0.00 / 220000000.00	RO	Real
		129 229 329	755 (8+) **I1 InFanElpsdLif** 755 (8+) **I2 InFanElpsdLif** 755 (8+) **I3 InFanElpsdLif** Inverter *n* Internal Fan Elapsed Life The amount of time the inverter stirring fans on inverter *n* have been running. This value can be reset using [I*n* PredMainReset].	Units: Default: Min/Max:	Hrs 0.00 0.00 / 220000000.00	RO	Real

File	Group	No.	Display Name Full Name Description	Values		Read-Write	Data Type
INVERTER N	Testpoints	140 142 240 242 340 342	755 (8+) **I1 Testpt Sel 1** 755 (8+) **I1 Testpt Sel 2** 755 (8+) **I2 Testpt Sel 1** 755 (8+) **I2 Testpt Sel 2** 755 (8+) **I3 Testpt Sel 1** 755 (8+) **I3 Testpt Sel 2** Inverter *n* Testpoint Selection 1, 2 Selects a source for [I*n* Testpt Val *n*]. Used by the factory, typically for diagnostic purposes.	Default: Min/Max:	0 0 / 65535	RW	32-bit Integer
		141 143 241 243 341 343	755 (8+) **I1 Testpt Val 1** 755 (8+) **I1 Testpt Val 2** 755 (8+) **I2 Testpt Val 1** 755 (8+) **I2 Testpt Val 2** 755 (8+) **I3 Testpt Val 1** 755 (8+) **I3 Testpt Val 2** Inverter *n* Testpoint Value 1, 2 Displays the data selected by [I*n* Testpt Sel *n*].	Default: Min/Max:	0.000000 –/+220000000.000000	RO	Real

Converter (Port 11) Common Parameters

Converter Common parameters apply only to PowerFlex 755 AC Input Frame 8 and larger drives.

File	Group	No.	Display Name Full Name Description	Values		Read-Write	Data Type
CONVERTER COMMON	System Ratings	1	755 (8+) **Sys Rated Amps** System Rated Amps Displays the continuous current rating of the converter system.	Units: Default: Min/Max:	Amps 0.00 0.00 / Dependent on Frame Rating	RO	Real
		2	755 (8+) **Sys Rated Volts** System Volts Input voltage class (400, 480, 600, 690, etc) of the converter system.	Units: Default: Min/Max:	V AC 0.00 0.00 / 690.00	RO	Real
		3 4 5	755 (8+) **C1 Rated Amps** 755 (8+) **C2 Rated Amps** 755 (8+) **C3 Rated Amps** Converter *n* Rated Amps Continuous current rating of converter *n*. Used with AC Input drives.	Units: Default: Min/Max:	Amps 0.00 0.00 / 3000.00	RO	Real

File	Group	No.	Display Name Full Name Description	Values	Read-Write	Data Type
CONVERTER COMMON	Status	10	755 (8+) **Online Status** Online Status Indicates whether the converter has successfully established fiber optic communications with the main control board.		RO	16-bit Integer
		12	755 (8+) **Fault Status** Fault Status Indicates whether the converter has a fault condition. See [C*n* Fault Status*n*] to view which fault conditions currently exist for converter *n*.		RO	16-bit Integer
		13	755 (8+) **Alarm Status** Alarm Status Indicates whether the converter has an alarm condition. See [C*n* Alarm Status*n*] to view which alarms currently exist for converter *n*.		RO	16-bit Integer

Options	Reserved	Reserved	Reserved	Reserved	Reserved	Reserved	Reserved	Reserved	Reserved	Reserved	Reserved	Reserved	Reserved	Reserved	Converter 2	Converter 1
Default	0	0	0	0	0	0	0	0	0	0	0	0	0	0	0	0
Bit	15	14	13	12	11	10	9	8	7	6	5	4	3	2	1	0

0 = Not Active
1 = Active

Options	Reserved	Reserved	Reserved	Reserved	Reserved	Reserved	Reserved	Reserved	Reserved	Reserved	Reserved	Reserved	Reserved	Reserved	Converter 2	Converter 1
Default	0	0	0	0	0	0	0	0	0	0	0	0	0	0	0	0
Bit	15	14	13	12	11	10	9	8	7	6	5	4	3	2	1	0

0 = No Fault
1 = Fault

Options	Reserved	Reserved	Reserved	Reserved	Reserved	Reserved	Reserved	Reserved	Reserved	Reserved	Reserved	Reserved	Reserved	Reserved	Converter 2	Converter 1
Default	0	0	0	0	0	0	0	0	0	0	0	0	0	0	0	0
Bit	15	14	13	12	11	10	9	8	7	6	5	4	3	2	1	0

0 = No Alarm
1 = Alarm

File	Group	No.	Display Name Full Name Description	Values		Read-Write	Data Type
CONVERTER COMMON	Configuration	16	755 (8+) **Gnd Cur Flt Lvl** Ground Current Fault Level The converter system peak ground current fault threshold. The converter will fault if the peak input ground current exceeds this threshold for five line cycles on any converter.	Units: Default: Min/Max:	Amps 600.0 0.0 / 3000.0	RW	Real
		17	755 (8+) **Converter Actn** Converter Action The action the inverter takes when a converter fault occurs.	Default: Options:	3 0 = "Ignore" 1 = "Reserved" 2 = "Minor Stop" 3 = "Coast Stop" 4 = "Ramp Stop" 5 = "Cur Lmt Stop"	RW	Integer

File	Group	No.	Display Name Full Name Description	Values		Read-Write	Data Type
CONVERTER COMMON	Metering	20	755 (8+) **L1 Phase Curr** Line 1 Phase Current The converter system AC line 1 (R) RMS input current. This is the sum of all line 1 (R) phase currents from all online converters.	Units: Default: Min/Max:	Amps 0.0 0.0 / 15000.0	RO	Real
		21	755 (8+) **L2 Phase Curr** Line 2 Phase Current The converter system AC line 2 (S) RMS input current. This is the sum of all line 2 (S) phase currents from all online converters.	Units: Default: Min/Max:	Amps 0.0 0.0 / 15000.0	RO	Real
		22	755 (8+) **L3 Phase Curr** Line 3 Phase Current The converter system AC line 3 (T) RMS input current. This is the sum of all line 3 (T) phase currents from all online converters.	Units: Default: Min/Max:	Amps 0.0 0.0 / 15000.0	RO	Real
		23	755 (8+) **Heatsink Temp** Heatsink Temperature The converter system heatsink temperature. This is the maximum heatsink temperature from all online converters.	Units: Default: Min/Max:	DegC 0.0 –/+200.0	RO	Real
		24	755 (8+) **SCR Temp** SCR Temperature The converter system SCR temperature. This is the maximum SCR temperature from all online converters.	Units: Default: Min/Max:	DegC 0.0 –/+200.0	RO	Real
		25	755 (8+) **Gate Board Temp** Gate Board Temperature The converter system gate board temperature. This is the maximum gate board temperature from all online converters	Units: Default: Min/Max:	DegC 0.0 –/+200.0	RO	Real
CONVERTER COMMON	Testpoints	30 32	755 (8+) **Testpoint Sel 1** 755 (8+) **Testpoint Sel 2** Testpoint Selection 1, 2 Selects a source for [Testpoint Val *n*]. Used by the factory, typically for diagnostic purposes.	Default: Min/Max:	0 0 / 65535	RW	32-bit Integer
		31 33	755 (8+) **Testpoint Val 1** 755 (8+) **Testpoint Val 2** Testpoint Value 1, 2 Displays data selected by [Testpoint Sel *n*].	Default: Min/Max:	0.000000 –/+220000000.000000	RO	Real

Converter *n* (Port 11) Parameters

Converter *n* parameters apply only to PowerFlex 755 AC Input Frame 8 and larger drives.

File	Group	No.	Display Name Full Name Description	Values	Read-Write	Data Type
CONVERTER N	Status	105 205 305	755 (8+) **C1 Fault Status1** 755 (8+) **C2 Fault Status1** 755 (8+) **C3 Fault Status1** Converter *n* Fault Status 1 Indicates which fault conditions currently exist for converter *n*. Refer to Chapter 6 - Converter (Port 11) Faults and Alarms (Frame 8 and Larger) for information on these fault codes.		RO	32-bit Integer

Options	Reserved	BFuseHarness	Reserved	Reserved	Reserved	Reserved	Reserved	Reserved	Line Fuse L3	Line Fuse L2	Line Fuse L1	LFuseHarness	CT Harness	DC Bus Short	DC Bus Open	Firmware Flt	Comm Loss	Power Supply	Brd NTCShort	Brd NTC Open	Brd OvrTemp	HS NTC Short	HS NTC Open	Ground Fault	Overcurrent	Single Phase	Line Freq	Line Dip	HS OvrTemp	SCR OvrTemp	Precharge	Fault Q Full
Default	0	0	0	0	0	0	0	0	0	0	0	0	0	0	0	0	0	0	0	0	0	0	0	0	0	0	0	0	0	0	0	0
Bit	31	30	29	28	27	26	25	24	23	22	21	20	19	18	17	16	15	14	13	12	11	10	9	8	7	6	5	4	3	2	1	0

0 = False
1 = True

File	Group	No.	Display Name Full Name Description	Values	Read-Write	Data Type
		106 206 306	755 (8+) **C1 Fault Status2** 755 (8+) **C2 Fault Status2** 755 (8+) **C3 Fault Status2** Converter *n* Fault Status 2 Indicates which fault conditions currently exist for converter *n*. Refer to Chapter 6 - Converter (Port 11) Faults and Alarms (Frame 8 and Larger) for information on these fault codes.		RO	32-bit Integer

Options	Reserved	Reserved	Reserved	Reserved	Reserved	Reserved	Reserved	Reserved	Reserved	Reserved	Reserved	Reserved	Reserved	Reserved	Reserved	Reserved	Reserved	Reserved	Reserved	Reserved	Reserved	Reserved	Reserved	Reserved	Reserved	Reserved	Reserved	Line Loss	AC Line High	Command Stop	BFuse Neg	BFuse Pos
Default	0	0	0	0	0	0	0	0	0	0	0	0	0	0	0	0	0	0	0	0	0	0	0	0	0	0	0	0	0	0	0	0
Bit	31	30	29	28	27	26	25	24	23	22	21	20	19	18	17	16	15	14	13	12	11	10	9	8	7	6	5	4	3	2	1	0

0 = False
1 = True

File	Group	No.	Display Name Full Name Description	Values	Read-Write	Data Type
		107 207 307	755 (8+) **C1 Alarm Status1** 755 (8+) **C2 Alarm Status1** 755 (8+) **C3 Alarm Status1** Converter *n* Alarm Status 1 Indicates which alarm conditions currently exist for converter *n*. Refer to Chapter 6 - Converter (Port 11) Faults and Alarms (Frame 8 and Larger) for information on these alarm codes.		RO	32-bit Integer

Options	Reserved	Reserved	Reserved	Reserved	Reserved	Reserved	Reserved	Reserved	Reserved	Reserved	Reserved	Reserved	Reserved	Reserved	Reserved	Single Phase	Line Freq	Minimum Line	Line Dip	Reserved	TVSS Blown	HS OvrTemp	SCR OvrTemp	Reserved	Reserved	Reserved	Reserved	Reserved	Reserved	Reserved	Phase LossL3	Phase LossL2	Phase LossL1	Precharge
Default	0	0	0	0	0	0	0	0	0	0	0	0	0	0	0	0	0	0	0	0	0	0	0	0	0	0	0	0	0	0	0	0	0	0	0
Bit	31	30	29	28	27	26	25	24	23	22	21	20	19	18	17	16	15	14	13	12	11	10	9	8	7	6	5	4	3	2	1	0

0 = False
1 = True

File	Group	No.	Display Name Full Name Description	Values		Read-Write	Data Type
CONVERTER N	Metering	115 215 315	755 (8+) **C1 L1 Phase Curr** 755 (8+) **C2 L1 Phase Curr** 755 (8+) **C3 L1 Phase Curr** Converter *n* Line 1 Phase Current Input current present at terminal L1 (R phase) of converter *n*.	Units: Default: Min/Max:	Amps 0.0 –/+9000.0	RO	Real
		116 216 316	755 (8+) **C1 L2 Phase Curr** 755 (8+) **C2 L2 Phase Curr** 755 (8+) **C3 L2 Phase Curr** Converter *n* Line 2 Phase Current Input current present at terminal L2 (S phase) of converter *n*.	Units: Default: Min/Max:	Amps 0.0 –/+9000.0	RO	Real
		117 217 317	755 (8+) **C1 L3 Phase Curr** 755 (8+) **C2 L3 Phase Curr** 755 (8+) **C3 L3 Phase Curr** Converter *n* Line 3 Phase Current Input current present at terminal L3 (T phase) of converter *n*.	Units: Default: Min/Max:	Amps 0.0 –/+9000.0	RO	Real
		118 218 318	755 (8+) **C1 Gnd Current** 755 (8+) **C2 Gnd Current** 755 (8+) **C3 Gnd Current** Converter *n* Ground Current The RMS ground current of AC input to converter *n*. The value displayed is based on the sum of converter *n* drive input currents (L1, L2, and L3). When the three phases are balanced, the ground current is ideally close to zero.	Units: Default: Min/Max:	Amps 0.0 –/+9000.0	RO	Real
		119 219 319	755 (8+) **C1 DC Bus Volt** 755 (8+) **C2 DC Bus Volt** 755 (8+) **C3 DC Bus Volt** Converter *n* DC Bus Voltage DC bus voltage measured by converter *n*.	Units: Default: Min/Max:	V DC 0.0 0.0 / 1200.0	RO	Real
		120 220 320	755 (8+) **C1 Heatsink Temp** 755 (8+) **C2 Heatsink Temp** 755 (8+) **C3 Heatsink Temp** Converter *n* Heatsink Temperature Temperature of the converter *n* heatsink.	Units: Default: Min/Max:	DegC 0.0 –/+200.0	RO	Real
		121 221 321	755 (8+) **C1 SCR Temp** 755 (8+) **C2 SCR Temp** 755 (8+) **C3 SCR Temp** Converter *n* SCR Frequency Maximum temperature of all SCRs for converter *n*.	Units: Default: Min/Max:	DegC 0.0 –/+200.0	RO	Real
		122 222 322	755 (8+) **C1 GateBoardTemp** 755 (8+) **C2 GateBoardTemp** 755 (8+) **C3 GateBoardTemp** Converter *n* Gate Board Temperature Gate board temperature for converter *n*.	Units: Default: Min/Max:	DegC 0.0 –/+200.0	RO	Real
		123 223 323	755 (8+) **C1 AC Line Freq** 755 (8+) **C2 AC Line Freq** 755 (8+) **C3 AC Line Freq** Converter *n* AC Line Frequency AC line frequency of converter *n*.	Units: Default: Min/Max:	Hz 0.0 0.0 / 100.0	RO	Real

File	Group	No.	Display Name Full Name Description	Values		Read-Write	Data Type
CONVERTER N	Metering	125 225 325	755 (8+) **C1 L12 Line Volt** 755 (8+) **C2 L12 Line Volt** 755 (8+) **C3 L12 Line Volt** Converter *n* Line 1 to Line 2 Line Voltage The phase-to-phase RMS line voltage between L1 and L2 for converter *n*.	Units: Default: Min/Max:	V AC 0.0 0.0 / 850.0	RO	Real
		126 226 326	755 (8+) **C1 L23 Line Volt** 755 (8+) **C2 L23 Line Volt** 755 (8+) **C3 L23 Line Volt** Converter *n* Line 2 to Line 3 Line Voltage The phase-to-phase RMS line voltage between L2 and L3 for converter *n*.	Units: Default: Min/Max:	V AC 0.0 0.0 / 850.0	RO	Real
		127 227 327	755 (8+) **C1 L31 Line Volt** 755 (8+) **C2 L31 Line Volt** 755 (8+) **C3 L31 Line Volt** Converter *n* Line 3 to Line 1 Line Voltage The phase-to-phase RMS line voltage between L3 and L1 for converter *n*.	Units: Default: Min/Max:	V AC 0.0 0.0 / 850.0	RO	Real

File	Group	No.	Display Name Full Name Description	Values		Read-Write	Data Type
CONVERTER N	Predictive Main	137 237 337	755 (8+) **C1 PredMainReset** 755 (8+) **C2 PredMainReset** 755 (8+) **C3 PredMainReset** Converter *n* Predictive Maintenance Reset Allows a reset of the elapsed run time to zero for the cabinet fan for converter *n*. After the time has been reset, the value of this parameter returns to 0 "Ready."	Default: Options:	0 = "Ready" 0 = "Ready" 1 = "Cb Fan Life"	RW	Real
		138 238 338	755 (8+) **C1 CbFanElpsdLif** 755 (8+) **C2 CbFanElpsdLif** 755 (8+) **C3 CbFanElpsdLif** Converter *n* Cabinet Fan Elapsed Life The amount of time the cabinet fan for converter *n* has been running. This value can be reset using [C*n* PredMainReset].	Units: Default: Min/Max:	Hrs 0.000 0.000 / 2200000.000	RO	Real

File	Group	No.	Display Name Full Name Description	Values		Read-Write	Data Type
CONVERTER N	Testpoints	140 142 240 242 340 342	755 (8+) **C1 Testpt Sel 1** 755 (8+) **C1 Testpt Sel 2** 755 (8+) **C2 Testpt Sel 1** 755 (8+) **C2 Testpt Sel 2** 755 (8+) **C3 Testpt Sel 1** 755 (8+) **C3 Testpt Sel 2** Converter *n* Testpoint Selection 1, 2 Selects a source for [C*n* Testpt Val *n*]. Used by the factory, typically for diagnostic purposes.	Default: Min/Max:	0 0 / 65535	RW	32-bit Integer
		141 143 241 243 341 343	755 (8+) **C1 Testpt Val 1** 755 (8+) **C1 Testpt Val 2** 755 (8+) **C2 Testpt Val 1** 755 (8+) **C2 Testpt Val 2** 755 (8+) **C3 Testpt Val 1** 755 (8+) **C3 Testpt Val 2** Converter *n* Testpoint Value 1, 2 Displays the data selected by [C*n* Testpt Sel *n*].	Default: Min/Max:	0.000000 –/+220.000000	RO	Real

Precharge (Port 11) Common Parameters

Precharge Common parameters apply only to PowerFlex 755 Common DC Input Frame 8 and larger drives.

File	Group	No.	Display Name Full Name Description	Values		Read-Write	Data Type
PRECHARGE COMMON	System Ratings	1	755 (8+) **Sys Rated Amps** System Rated Amps Displays the continuous current rating of the precharge system.	Units: Default: Min/Max:	Amps 0.00 0.00 / 5000.00	RO	Real
		2	755 (8+) **Sys Rated Volts** System Volts Input voltage class (400, 480, 600, 690, etc) of the precharge system.	Units: Default: Min/Max:	V AC 0.00 0.00 / 690.00	RO	Real
		3 4 5	755 (8+) **P1 Rated Amps** 755 (8+) **P2 Rated Amps** 755 (8+) **P3 Rated Amps** Precharge *n* Rated Amps Continuous current rating of precharge unit *n*. Used with Common DC Input drives.	Units: Default: Min/Max:	Amps 0.00 0.00 / 3000.00	RO	Real

File	Group	No.	Display Name Full Name Description	Values	Read-Write	Data Type
PRECHARGE COMMON	Status	10	755 (8+) **Online Status** Online Status Indicates whether the precharge unit has successfully established fiber optic communications with the main control board.		RO	16-bit Integer
		12	755 (8+) **Fault Status** Fault Status Indicates whether the precharge unit has a fault condition. See [P*n* Fault Status*n*] and to view which fault conditions currently exist for precharge *n*.		RO	16-bit Integer
		13	755 (8+) **Alarm Status** Alarm Status Indicates whether the precharge unit has an alarm condition. See [P*n* Alarm Status*n*] to view which alarms currently exist for precharge *n*.		RO	16-bit Integer

Options	Reserved	Reserved	Reserved	Reserved	Reserved	Reserved	Reserved	Reserved	Reserved	Reserved	Reserved	Reserved	Reserved	Reserved	Precharge 2	Precharge 1
Default	0	0	0	0	0	0	0	0	0	0	0	0	0	0	0	0
Bit	15	14	13	12	11	10	9	8	7	6	5	4	3	2	1	0

0 = Not Active
1 = Active

Options	Reserved	Reserved	Reserved	Reserved	Reserved	Reserved	Reserved	Reserved	Reserved	Reserved	Reserved	Reserved	Reserved	Reserved	Precharge 2	Precharge 1
Default	0	0	0	0	0	0	0	0	0	0	0	0	0	0	0	0
Bit	15	14	13	12	11	10	9	8	7	6	5	4	3	2	1	0

0 = No Fault
1 = Fault

Options	Reserved	Reserved	Reserved	Reserved	Reserved	Reserved	Reserved	Reserved	Reserved	Reserved	Reserved	Reserved	Reserved	Reserved	Precharge 2	Precharge 1
Default	0	0	0	0	0	0	0	0	0	0	0	0	0	0	0	0
Bit	15	14	13	12	11	10	9	8	7	6	5	4	3	2	1	0

0 = No Alarm
1 = Alarm

File	Group	No.	Display Name Full Name Description	Values		Read-Write	Data Type
PRECHARGE COMMON	Metering	18	755 (8+) **Main DC Bus Volt** Main DC Bus Voltage Sets the main DC bus voltage.	Units: Default: Min/Max:	V DC 0.00 0.oo / 1200.00	RW	Real
		25	755 (8+) **Gate Board Temp** Gate Board Temperature The precharge system gate board temperature. This is the maximum gate board temperature from all online precharge units.	Units: Default: Min/Max:	DegC 0.0 –/+200.0	RO	Real

File	Group	No.	Display Name Full Name Description	Values		Read-Write	Data Type
PRECHARGE COMMON	Testpoints	30 32	755 (8+) **Testpoint Sel 1** 755 (8+) **Testpoint Sel 2** Testpoint Selection 1, 2 Selects a source for [Testpoint Val *n*]. Used by the factory, typically for diagnostic purposes.	Default: Min/Max:	0 0 / 65535	RW	32-bit Integer
		31 33	755 (8+) **Testpoint Val 1** 755 (8+) **Testpoint Val 2** Testpoint Value 1, 2 Displays data selected by [Testpoint Sel *n*].	Default: Min/Max:	0.000000 –/+220000000.000000	RO	Real

Precharge *n* (Port 11) Parameters

Precharge *n* parameters apply only to PowerFlex 755 Common DC Input Frame 8 and larger drives.

File	Group	No.	Display Name Full Name Description	Values	Read-Write	Data Type
PRECHARGE N	Status	104 204 304	755 (8+) **P1 Board Status** 755 (8+) **P2 Board Status** 755 (8+) **P3 Board Status** Precharge *n* Board Status Status bits for the precharge board.		RO	32-bit Integer

Options	ReadyToReset	Flash Update	Reserved	Reserved	Reserved	Reserved	Reserved	Flash Failed	MCS AuxInput	MCS UVDlyOut	MCSSprgChgOt	MCSShntRelOt	MCSClsCilOut	Ext FaultRst	Ext Inhibit	Ext Opn/Cls	Fan Out	DoorLock Out	DoorLock In	BusNegFuseIn	BusPosFuseIn	Discnnct Out	Discnnct In	DC Bus OK	240V ACPresnt	Reserved	Alarm	Faulted	MCS Opening	Prechrg Done	MCS Closing	Ready
Default	0	0	0	0	0	0	0	0	0	0	0	0	0	0	0	0	0	0	0	0	0	0	0	0	0	0	0	0	0	0	0	0
Bit	31	30	29	28	27	26	25	24	23	22	21	20	19	18	17	16	15	14	13	12	11	10	9	8	7	6	5	4	3	2	1	0

0 = False
1 = True

Bit 0 "Ready" – CB controller is ready to begin the precharge sequence. Stop input is not active, 240V AC is present, molded case switch (MCS) auxiliary contact is open, disconnect is closed and there are no faults.
Bit 1 "MCS Closing" – The precharge sequence is in progress but is not complete.
Bit 2 "Prechrg Done" – Precharge has been completed and the MCS is closed.
Bit 3 "MCS Opening" – The MCS is in the process of opening.
Bit 4 "Faulted" – A fault has occurred and is enumerated in the fault word.
Bit 5 "Alarm" – An alarm has occurred and is enumerated in the alarm word.
Bit 7 "240V ACPresnt" – 240V AC supply is present. Threshold is 85% or 204V AC.
Bit 8 "DC Bus OK" – 0 = DC bus voltage out of tolerance. 1 = DC bus voltage is within tolerance.
Bit 9 "Discnnct In" – 0 = Auxiliary switch is off. 1 = Auxiliary switch is on.
Bit 10 "Discnnct Out" – 0 = Relay is off. 1 = Relay is on.
Bit 11 "BusPosFuseIn" – 0 = Fuse is blown. 1 = Fuse is intact.
Bit 12 "BusNegFuseIn" – 0 = Fuse is blown. 1 = Fuse is intact.
Bit 13 "DoorLock In" – 0 = Door is open. 1 = Door is closed.
Bit 14 "DoorLock Out" – 0 = Door solenoid relay is off. 1 = Door solenoid relay is on.
Bit 15 "Fan Out" – 0 = Fan is on. 1 = Fan is off.
Bit 16 "Ext Opn/Cls" – 0 = Inactive (tied to common or open). 1 = Active (24V DC applied).
Bit 17 "Ext Inhibit" – 0 = Stopped (tied to common or open). 1 = Not Stopped (24V DC applied). Level sensitive. Ignored when fiber-optic communications is online.
Bit 18 "Ext FaultRst" – 0 = Inactive (tied to common or open). 1 = Active (24V DC applied).
Bit 19 "MCSClsCilOut" – 0 = Relay is off. 1 = Relay is on.
Bit 20 "MCSShntRelOt" – 0 = Relay is off. 1 = Relay is on.
Bit 21 "MCSSprgChgOt" – 0 = Relay is off. 1 = Relay is on.
Bit 22 "MCS UVDlyOut" – 0 = Relay is off. 1 = Relay is on.
Bit 23 "MCS AuxInput" – 0 = MCS auxiliary contact is open. 1 = MCS auxiliary contact is closed.
Bit 24 "Flash Failed" – An error occurred during the flash update process.
Bit 30 "Flash Update" – The precharge controller is in flash update mode.
Bit 31 "ReadyToReset" – The flash update process has ended and the precharge controller is waiting for a reset command.

File	Group	No.	Display Name Full Name Description	Values	Read-Write	Data Type
PRECHARGE N	Status	105 205 305	755 (8+) **P1 Fault Status1** 755 (8+) **P2 Fault Status1** 755 (8+) **P3 Fault Status1** Precharge *n* Fault Status 1 Indicates which fault conditions currently exist for precharge *n*. Refer to Chapter 6 - Converter (Port 11) Faults and Alarms (Frame 8 and Larger) for information on these fault codes.		RO	32-bit Integer

Options	MCSAuxCntact	MCSCloseFail	MCSShuntTrip	Reserved	Reserved	Reserved	Reserved	Reserved	Reserved	Reserved	Reserved	BusUnderVolt	DiscnnectErr	240V AC Loss	Reserved	Reserved	Reserved	Reserved	Reserved	Reserved	Reserved	Reserved	Reserved	Reserved	Reserved	Reserved	Reserved	Reserved	Reserved	Reserved	Reserved	Precharge
Default	0	0	0	0	0	0	0	0	0	0	0	0	0	0	0	0	0	0	0	0	0	0	0	0	0	0	0	0	0	0	0	0
Bit	31	30	29	28	27	26	25	24	23	22	21	20	19	18	17	16	15	14	13	12	11	10	9	8	7	6	5	4	3	2	1	0

0 = False
1 = True

File	Group	No.	Display Name Full Name Description	Values	Read-Write	Data Type
		106 206 306	755 (8+) **P1 Fault Status2** 755 (8+) **P2 Fault Status2** 755 (8+) **P3 Fault Status2** Precharge *n* Fault Status 2 Indicates which fault conditions currently exist for precharge *n*. Refer to Chapter 6 - Converter (Port 11) Faults and Alarms (Frame 8 and Larger) for information on these fault codes.		RO	32-bit Integer

Options	Reserved	Fault Q Full	Reserved	Reserved	Reserved	BusNgFuseFlt	BusPsFuseFlt	BusFuseHrnss	Bus Shorted	Reserved	Reserved	Reserved	Reserved	Reserved	Reserved	Reserved	Reserved	Reserved	Reserved	Reserved	Reserved	Firmware Flt	Comm Loss	Pwr Supp Flt	Brd NTCShort	Brd NTC Open	Brd OvrTemp	Reserved	Reserved	Reserved	Reserved	MCS Closed
Default	0	0	0	0	0	0	0	0	0	0	0	0	0	0	0	0	0	0	0	0	0	0	0	0	0	0	0	0	0	0	0	0
Bit	31	30	29	28	27	26	25	24	23	22	21	20	19	18	17	16	15	14	13	12	11	10	9	8	7	6	5	4	3	2	1	0

0 = False
1 = True

File	Group	No.	Display Name Full Name Description	Values	Read-Write	Data Type
		107 207 307	755 (8+) **P1 Alarm Status1** 755 (8+) **P2 Alarm Status1** 755 (8+) **P3 Alarm Status1** Precharge *n* Alarm Status 1 Indicates which alarm conditions currently exist for precharge *n*. Refer to Chapter 6 - Converter (Port 11) Faults and Alarms (Frame 8 and Larger) for information on these alarm codes.		RO	32-bit Integer

Options	Reserved	Reserved	Reserved	Reserved	Reserved	Reserved	Reserved	Reserved	Reserved	Door Open	Bus Overvolt	BusUnderVolt	DiscnnctOpen	240V AC Loss	Reserved	Reserved	Reserved	Bus Dip	Reserved	Reserved	Reserved	Reserved	Reserved	Reserved	Reserved	Reserved	Reserved	Reserved	Reserved	Reserved	Reserved	Reserved	Reserved	Precharge
Default	0	0	0	0	0	0	0	0	0	0	0	0	0	0	0	0	0	0	0	0	0	0	0	0	0	0	0	0	0	0	0	0	0	0
Bit	31	30	29	28	27	26	25	24	23	22	21	20	19	18	17	16	15	14	13	12	11	10	9	8	7	6	5	4	3	2	1	0

0 = False
1 = True

File	Group	No.	Display Name Full Name Description	Values		Read-Write	Data Type
PRECHARGE N	Metering	110 210 310	755 (8+) **P1 DC Bus Volts** 755 (8+) **P2 DC Bus Volts** 755 (8+) **P3 DC Bus Volts** Precharge *n* DC Bus Voltage Indicates the DC voltage on the inverter capacitor bank. This voltage is measured at a point after the precharge resistors and contactor.	Units: Default: Min/Max:	V DC 0.0 0.0 / 1200.0	RO	Real
		111 211 311	755 (8+) **P1 Main DC Volts** 755 (8+) **P2 Main DC Volts** 755 (8+) **P3 Main DC Volts** Precharge *n* Main DC Voltage Indicates the input DC voltage to the drive. This voltage is measured at the input to the drive before the precharge resistors and contactor.	Units: Default: Min/Max:	V DC 0.0 0.0 / 1200.0	RO	Real
		112 212 312	755 (8+) **P1 240VSplyVolts** 755 (8+) **P2 240VSplyVolts** 755 (8+) **P3 240VSplyVolts** Precharge *n* 240 V Supply Voltage Indicates the RMS output voltage of the 240V AC control transformer.	Units: Default: Min/Max:	V AC 0.0 0.0 / 500.0	RO	Real
		122 222 322	755 (8+) **P1 GateBoardTemp** 755 (8+) **P2 GateBoardTemp** 755 (8+) **P3 GateBoardTemp** Precharge *n* Gate Board Temperature Gate board temperature for precharge *n*.	Units: Default: Min/Max:	DegC 0.0 –/+200.0	RO	Real

File	Group	No.	Display Name Full Name Description	Values		Read-Write	Data Type
PRECHARGE N	Predictive Main	137 237 337	755 (8+) **P1 PredMainReset** 755 (8+) **P2 PredMainReset** 755 (8+) **P3 PredMainReset** Precharge *n* Predictive Maintenance Reset Allows a reset of the elapsed run time to zero for the cabinet fan for precharge *n*. After the time has been reset, the value of this parameter returns to 0 "Ready."	Default: Options:	0 = "Ready" 0 = "Ready" 1 = "Cb Fan Life"	RW	Real
		138 238 338	755 (8+) **P1 CbFanElpsdLif** 755 (8+) **P2 CbFanElpsdLif** 755 (8+) **P3 CbFanElpsdLif** Precharge *n* Cabinet Fan Elapsed Life The amount of time the cabinet fan for precharge *n* has been running. This value can be reset using [P*n* PredMainReset].	Units: Default: Min/Max:	Hrs 0.000 0.000 / 2200000.000	RO	Real

File	Group	No.	Display Name Full Name Description	Values		Read-Write	Data Type
PRECHARGE N	Testpoints	**140** **142** **240** **242** **340** **342**	755 (8+) **P1 Testpt Sel 1** 755 (8+) **P1 Testpt Sel 2** 755 (8+) **P2 Testpt Sel 1** 755 (8+) **P2 Testpt Sel 2** 755 (8+) **P3 Testpt Sel 1** 755 (8+) **P3 Testpt Sel 2** Precharge *n* Testpoint Selection 1, 2 Selects a source for [P*n* Testpt Val *n*]. Used by the factory, typically for diagnostic purposes.	Default: Min/Max:	0 0 / 65535	RW	32-bit Integer
		141 **143** **241** **243** **341** **343**	755 (8+) **P1 Testpt Val 1** 755 (8+) **P1 Testpt Val 2** 755 (8+) **P2 Testpt Val 1** 755 (8+) **P2 Testpt Val 2** 755 (8+) **P3 Testpt Val 1** 755 (8+) **P3 Testpt Val 2** Precharge *n* Testpoint Value 1, 2 Displays the data selected by or [P*n* Testpt Sel *n*].	Default: Min/Max:	0.000000 –/+220.000000	RO	Real

Notes:

Embedded Feature and Option Module Parameters

This chapter lists and describes the PowerFlex 750-Series drive embedded feature and option module parameters. The parameters can be programmed (viewed/edited) using a Human Interface Module (HIM). Refer to PowerFlex 20-HIM-A6 and 20-HIM-C6S HIM (Human Interface Module) User Manual, publication 20HIM-UM001, for information on using the HIM to view and edit parameters. As an alternative, programming can also be performed using DriveTools™ software and a personal computer.

Topic	Page
Embedded EtherNet/IP (Port 13) Parameters	240
Communication Configurations	246
Embedded DeviceLogix (Port 14) Parameters	249
11-Series I/O Module Parameters	252
22-Series I/O Module Parameters	262
Single Incremental Encoder Module Parameters	273
Dual Incremental Encoder Module Parameters	276
Universal Feedback Module Parameters	281
Safe Speed Monitor Module Parameters	299

Embedded EtherNet/IP (Port 13) Parameters

For complete information on the Embedded EtherNet/IP feature, refer to the PowerFlex 755 Drive Embedded EtherNet/IP Adapter user manual, publication 750COM-UM001.

File	Group	No.	Display Name Full Name Description	Values		Read-Write	Data Type
Embedded EtherNet/IP		1 Thru 16	755 **DL From Net 01** 755 **DL From Net 16** Datalinks From Network 01…16 Sets the port number and parameter number to which the selected Datalink connects. Each selected port/parameter is written with data received from the network (outputs from the controller). **Parameters 1…14** can only link to floating point parameters. **Parameters 15 and 16** can only link to DINT parameters. If setting the value manually, the parameter value = (10000 x port number) + (destination parameter number). For example, to use P1 [DL From Net 01] to write to Parameter 1 of an optional encoder module plugged into drive Port 5. The value for P1 [DL From Net 01] must be 50001 [(10000 x 5) + 1].	Default: Min/Max:	0 0 / 159999	RW	32-bit Integer
		17 Thru 32	755 **DL To Net 01** 755 **DL To Net 16** Datalinks To Network 01…16 Sets the port number and parameter number to which the selected Datalink connects. Each selected port/parameter is read and their values are transmitted over the network to the controller (inputs to the controller). **Parameters 17…30** can only link to floating point parameters. **Parameters 31 and 32** can only link to DINT parameters. If setting the value manually, the parameter value = (10000 x port number) + (origination parameter number). For example, to use P17 [DL To Net 01] to read Parameter 01 of an optional I/O module plugged into drive Port 4. The value for P17 [DL To Net 01] must be 40001 [(10000 x 4) + 1].	Default: Min/Max:	0 0 / 159999	RW	32-bit Integer
		33	755 **Port Number** Port number Displays the drive port to which the embedded EtherNet/IP adapter is dedicated. This is always Port 13.	Default: Value:	13 13 / 15	RO	32-bit Integer
		34	755 **DLs From Net Act** Datalinks From Network Actual Displays the number of actual controller-to- drive Datalinks that the drive is using based on the I/O connection opened by the controller.	Default: Min/Max:	0 0 / 16	RO	32-bit Integer
		35	755 **DLs To Net Act** Datalinks To Network Actual Displays the number of actual drive-to- controller Datalinks that the controller is using based on the I/O connection opened by the controller.	Default: Min/Max:	0 0 / 16	RO	32-bit Integer
		36	755 **BOOTP** Bootstrap Protocol Configures the adapter to use BOOTP so that you can set its IP address, subnet mask, and gateway address with a BOOTP server. When this parameter is disabled, you must use the adapter parameters to set these addressing functions. This parameter is only functional when the IP address switches are set to 001…254 or 888. Power cycle or reset is required for change to take affect.	Default: Options:	1 = "Enabled" 0 = "Disabled" 1= "Enabled"	RW	32-bit Integer
		37	755 **Net Addr Src** Network Address Source Displays the source from which the adapter node address, subnet mask, and gateway are taken. This will be switches, Parameters 38…41 [IP Addr Cfg *n*], or BOOTP. It is determined by the settings of the octet switches on the adapter. See Establishing A Connection With EtherNet/IP on page 21 for details.	Default: Options:	0 = "Switches" 0 = "Switches" 1 = "Parameters" 2 = "BOOTP"	RO	32-bit Integer

File	Group	No.	Display Name Full Name Description	Values		Read-Write	Data Type
Embedded EtherNet/IP		**38** **39** **40** **41**	755 **IP Addr Cfg 1** 755 **IP Addr Cfg 2** 755 **IP Addr Cfg 3** 755 **IP Addr Cfg 4** IP Address Configure 1…4 Sets the bytes in the IP address. 255 . 255 . 255 . 255 [IP Addr Cfg 1] [IP Addr Cfg 2] [IP Addr Cfg 3] Set with Octet Switch on Drive Main Control Board **Important:** To set the IP address using these parameters, P36 [BOOTP] must be set to "0" (Disabled) and switches set to a value other than 001…254 or 888. If the drive does not accept parameter settings, check the Octet switch on the drive main control board. Set to 999 and cycle power to the drive.	Default: Min/Max:	0 0 / 255	RW	32-bit Integer
		42 **43** **44** **45**	755 **Subnet Cfg 1** 755 **Subnet Cfg 2** 755 **Subnet Cfg 3** 755 **Subnet Cfg 4** Subnet Configure 1…4 Sets the bytes of the subnet mask. 255 . 255 . 255 . 255 [Subnet Cfg 1] [Subnet Cfg 2] [Subnet Cfg 3] [Subnet Cfg 4] **Important:** To set the subnet mask using these parameters, P36 [BOOTP] must be set to "0" (Disabled) and switches set to a value other than 001…254 or 888.	Default: Min/Max:	0 0 / 255	RW	32-bit Integer
		46 **47** **48** **49**	755 **Gateway Cfg 1** 755 **Gateway Cfg 2** 755 **Gateway Cfg 3** 755 **Gateway Cfg 4** Gateway Configure 1…4 Sets the bytes of the gateway address. 255 . 255 . 255 . 255 [Gateway Cfg 1] [Gateway Cfg 2] [Gateway Cfg 3] [Gateway Cfg 4] **Important:** To set the gateway address using these parameters, P36 [BOOTP] must be set to "0" (Disabled) and switches set to a value other than 001…254 or 888.	Default: Min/Max:	0 0 / 255	RW	32-bit Integer
		50	755 **Net Rate Cfg** Network Rate Configure Sets the network data rate at which the adapter communicates. (Updates P51 [Net Rate Act] after a reset.)	Default: Options:	0 = "Autodetect" 0 = "Autodetect" 1 = "10Mbps Full" 2 = "10Mbps Half" 3 = "100Mbps Full" 4 = "100Mbps Half"	RW	32-bit Integer

File	Group	No.	Display Name Full Name Description	Values		Read-Write	Data Type
Embedded EtherNet/IP		51	**755 Net Rate Act** Network Rate Actual Displays the actual network data rate used by the adapter.	Default: Options:	0 = "No Link" 0 = "No Link" 1 = "10Mbps Full" 2 = "10Mbps Half" 3 = "100Mbps Full" 4 = "100Mbps Half" 5 = "Dup IP Addr"	RO	32-bit Integer
		52	**755 Web Enable** Web Enabled Enables/disables the adapter Web page features. For detailed information on the Web enable feature, refer to the PowerFlex 755 Drive Embedded EtherNet/IP Adapter User Manual, publication 750COM-UM001.	Default: Options:	0 = "Disabled" 0 = "Disabled" 1 = "Enabled"	RW	32-bit Integer
		53	**755 Web Features** Web Features Enables/disables the Web-configurable e-mail notification feature. For detailed information on the Web enable feature, refer to the PowerFlex 755 Drive Embedded EtherNet/IP Adapter User Manual, publication 750COM-UM001.			RW	16-bit Integer

Options	Reserved	Reserved	Reserved	Reserved	Reserved	Reserved	Reserved	Reserved	Reserved	Reserved	Reserved	Reserved	Reserved	Reserved	Reserved	Email Config
Default	0	0	0	0	0	0	0	0	0	0	0	0	0	0	0	1
Bit	15	14	13	12	11	10	9	8	7	6	5	4	3	2	1	0

0 = Disabled
1 = Enabled

File	Group	No.	Display Name Full Name Description	Values		Read-Write	Data Type
		54	**755 Comm Flt Action** Communication Fault Action Sets the action that the adapter and drive will take if the adapter detects that I/O communications have been disrupted. This setting is effective only if I/O that controls the drive is transmitted through the adapter.	Default: Options:	0 = "Fault" 0 = "Fault" 1 = "Stop" 2 = "Zero Data" 3 = "Hold Last" 4 = "Send Flt Cfg"	RW	32-bit Integer



ATTENTION: Risk of injury or equipment damage exists. P54 [Comm Flt Action] lets you determine the action of the adapter and connected drive if I/O communications are disrupted. By default, this parameter faults the drive. You can set this parameter so that the drive continues to run. Precautions should be taken to ensure that the setting of this parameter does not create a risk of injury or equipment damage. When commissioning the drive, verify that your system responds correctly to various situations (for example, a disconnected cable).

File	Group	No.	Display Name Full Name Description	Values		Read-Write	Data Type
		55	**755 Idle Flt Action** Idle Fault Action Sets the action that the adapter and drive will take if the adapter detects that the controller is in program mode or faulted. This setting is effective only if I/O that controls the drive is transmitted through the adapter.	Default: Options:	0 = "Fault" 0 = "Fault" 1 = "Stop" 2 = "Zero Data" 3 = "Hold Last" 4 = "Send Flt Cfg"	RW	32-bit Integer



ATTENTION: Risk of injury or equipment damage exists. P55 [Idle Flt Action] lets you determine the action of the adapter and connected drive when the controller is idle. By default, this parameter faults the drive. You can set this parameter so that the drive continues to run. Precautions should be taken to ensure that the setting of this parameter does not create a risk of injury or equipment damage. When commissioning the drive, verify that your system responds correctly to various situations (for example, a controller in idle state).

File	Group	No.	Display Name Full Name Description	Values		Read-Write	Data Type
Embedded EtherNet/IP		56	755 **Peer Flt Action** Peer Fault Action Sets the action that the adapter and drive will take if the adapter detects that Peer I/O communications have been disrupted. This setting is effective only if I/O is transmitted through the adapter. For detailed information on peer communications, refer to the PowerFlex 755 Drive Embedded EtherNet/IP Adapter User Manual, publication 750COM-UM001.  **ATTENTION:** Risk of injury or equipment damage exists. P56 [Peer Flt Action] lets you determine the action of the adapter and connected drive if the adapter is unable to communicate with the designated peer. By default, this parameter faults the drive. You can set this parameter so that the drive continues to run. Precautions should be taken to ensure that the setting of this parameter does not create a risk of injury or equipment damage. When commissioning the drive, verify that your system responds correctly to various situations (for example, a disconnected cable).	Default: Options:	0 = "Fault" 0 = "Fault" 1 = "Stop" 2 = "Zero Data" 3 = "Hold Last" 4 = "Send Flt Cfg"	RW	32-bit Integer
		57	755 **Msg Flt Action** Message Fault Action Sets the action that the adapter and drive will take if the adapter detects that explicit messaging, only when used for drive control via PCCC and the CIP Register Object, has been disrupted.  **ATTENTION:** Risk of injury or equipment damage exists. P57 [Msg Flt Action] lets you determine the action of the adapter and connected drive if explicit messaging for drive control is disrupted. By default, this parameter faults the drive. You can set this parameter so that the drive continues to run. Precautions should be taken to ensure that the setting of this parameter does not create a risk of injury or equipment damage. When commissioning the drive, verify that your system responds correctly to various situations (for example, a disconnected cable).	Default: Options:	0 = "Fault" 0 = "Fault" 1 = "Stop" 2 = "Zero Data" 3 = "Hold Last" 4 = "Send Flt Cfg"	RW	32-bit Integer
		58	755 **Flt Cfg Logic** Fault Configure Logic Sets the Logic Command data that is sent to the drive if any of the following is true: • P54 [Comm Flt Action] is set to 4 "Send Flt Cfg" and I/O communications are disrupted. • P55 [Idle Flt Action] is set to 4 "Send Flt Cfg" and the controller is idle. • P56 [Peer Flt Action] is set to 4 "Send Flt Cfg" and Peer I/O communications are disrupted. • P57 [Msg Flt Action] is set to 4 "Send Flt Cfg" and explicit messaging for drive control is disrupted. The bit definitions in the Logic Command word for PowerFlex 750-Series drives are shown on page 247.	Default: Min/Max:	0000 0000 0000 0000 0000 0000 0000 0000 0000 0000 0000 0000 0000 0000 0000 0000 1111 1111 1111 1111 1111 1111 1111 1111	RW	32-bit Integer
		59	755 **Flt Cfg Ref** Fault Configure Reference Sets the Reference data that is sent to the drive if any of the following is true: • P54 [Comm Flt Action] is set to 4 "Send Flt Cfg" and I/O communications are disrupted. • P55 [Idle Flt Action] is set to 4 "Send Flt Cfg" and the controller is idle. • P56 [Peer Flt Action] is set to 4 "Send Flt Cfg" and Peer I/O communications are disrupted. • P57 [Msg Flt Action] is set to 4 "Send Flt Cfg" and explicit messaging for drive control is disrupted.	Default: Min/Max:	0 –/+-220000000	RW	Real

File	Group	No.	Display Name Full Name Description	Values		Read-Write	Data Type
Embedded EtherNet/IP		**60** Thru **75**	755 **Flt Cfg DL 01** 755 **Flt Cfg DL 16** Fault Configure DeviceLogix Sets the data that is sent to the Datalink in the drive if any of the following is true: • P54 [Comm Flt Action] is set to 4 "Send Flt Cfg" and I/O communications are disrupted. • P55 [Idle Flt Action] is set to 4 "Send Flt Cfg" and the controller is idle. • P56 [Peer Flt Action] is set to 4 "Send Flt Cfg" and Peer I/O communications are disrupted. • P57 [Msg Flt Action] is set to 4 "Send Flt Cfg" and explicit messaging for drive control is disrupted.	Default: Min/Max:	0 0 / 4294967295	RW	32-bit Integer
		76	755 **DLs Fr Peer Cfg** Datalinks From Peer Configure Sets the number of network-to-drive Datalinks (parameters) that are used for peer I/O. The Datalinks being used are allocated from the end of the list. For example, if this parameter's value is set to 3, Datalinks 14…16 are allocated for the three selected Datalinks. The Datalinks allocated for peer I/O cannot overlap with other assigned DL From Net 01…16 parameters. For detailed information on peer communications, refer to the PowerFlex 755 Drive Embedded EtherNet/IP Adapter User Manual, publication 750COM-UM001.	Default: Min/Max:	0 0 / 16	RW	32-bit Integer
		77	755 **DLs Fr Peer Act** Datalinks From Peer Action Displays the value of P76 [DLs Fr Peer Cfg] at the time the drive was reset. This is the number of actual peer-to-drive Datalinks that the drive is expecting.	Default: Min/Max:	0 0 / 16	RO	32-bit Integer
		78	755 **Logic Src Cfg** Logic Source Configure Controls which of the peer-to-drive Datalinks contain the Logic Command for the drive. For detailed information on peer communications, refer to the PowerFlex 755 Drive Embedded EtherNet/IP Adapter User Manual, publication 750COM-UM001.	Default: Min/Max:	0 0 / 16	RW	32-bit Integer
		79	755 **Ref Src Cfg** Reference Source Configure Controls which of the peer-to-drive Datalinks contain the Reference for the drive. For detailed information on peer communications, refer to the PowerFlex 755 Drive Embedded EtherNet/IP Adapter User Manual, publication 750COM-UM001.	Default: Min/Max:	0 0 / 16	RW	32-bit Integer
		80	755 **Fr Peer Timeout** From Peer Timeout Sets the timeout for a Peer I/O connection. If the time is reached without the adapter receiving (consuming) a message, the adapter will respond with the action specified in P56 [Peer Flt Action]. In an adapter receiving (consuming) Peer I/O, the value of this parameter must be greater than the product of the value of P89 [To Peer Period] in the adapter transmitting (producing) Peer I/O multiplied by the value of P90 [To Peer Skip] in the adapter transmitting (producing) Peer I/O. For detailed information on peer communications, refer to the PowerFlex 755 Drive Embedded EtherNet/IP Adapter User Manual, publication 750COM-UM001.	Units: Default: Min/Max:	Secs 10.00 0.00 / 200.00	RW	Real

File	Group	No.	Display Name Full Name Description	Values		Read-Write	Data Type
Embedded EtherNet/IP		**81** **82** **83** **84**	755 **Fr Peer Addr 1** 755 **Fr Peer Addr 2** 755 **Fr Peer Addr 3** 755 **Fr Peer Addr 4** From Peer Address 1…4 Sets the bytes in the IP address that specifies the device from which the adapter receives (consumes) Peer I/O data. 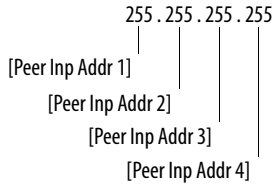 **Important:** The Peer Inp Addr must be on the same subnet as the embedded EtherNet/IP adapter. Changes to these parameters are ignored when P85 [Fr Peer Enable] is "1" (On). For detailed information on peer communications, refer to the PowerFlex 755 Drive Embedded EtherNet/IP Adapter User Manual, publication 750COM-UM001.	Default: Min/Max:	0 0 / 255	RW	32-bit Integer
		85	755 **Fr Peer Enable** From Peer Enable Controls whether Peer I/O input is operating. A value of 0 "Off" turns off Peer I/O input. A value of 1 "Cmd/Ref" overrides the settings in Parameters P76 [DLs Fr Peer Cfg], P78 [Logic Src Cfg], and P79 [Ref Src Cfg] and automatically uses peer Datalink 01 as the drive's present Logic Command and peer Datalink 02 as the drive's Reference. A value of 2 "Custom" enables peer I/O input using the Datalink count and settings provided by the user. For detailed information on peer communications, refer to the PowerFlex 755 Drive Embedded EtherNet/IP Adapter User Manual, publication 750COM-UM001.	Default: Options:	0 = "Off" 0 = "Off" 1 = "Cmd/Ref" 2 = "Custom"	RW	32-bit Integer
		86	755 **Fr Peer Status** From Peer Status Displays the status of the consumed Peer I/O input connection. For detailed information on peer communications, refer to the PowerFlex 755 Drive Embedded EtherNet/IP Adapter User Manual, publication 750COM-UM001.	Default: Options:	0 = "Off" 0 = "Off" 1 = "Waiting" 2 = "Running" 3 = "Faulted"	RO	32-bit Integer
		87	755 **DLs To Peer Cfg** Datalinks To Peer Configure Sets the number of drive-to-network Datalinks (parameters) that are used for Peer I/O. The Datalinks being used are allocated from the end of the list. For example, if this parameter's value is set to 3, Datalinks 14…16 are allocated for the three selected Datalinks. The Datalinks allocated for this cannot overlap with other assigned DL To Net 01…16 parameters. For detailed information on peer communications, refer to the PowerFlex 755 Drive Embedded EtherNet/IP Adapter User Manual, publication 750COM-UM001.	Default: Min/Max:	0 0 / 16	RW	32-bit Integer
		88	755 **DLs To Peer Act** Datalinks To Peer Action Displays the value of P87 [DLs To Peer Cfg] at the time the drive was reset. This is the number of actual drive-to-peer Datalinks that the drive is expecting.	Default: Min/Max:	0 0 / 16	RO	32-bit Integer

File	Group	No.	Display Name Full Name Description	Values		Read-Write	Data Type
Embedded EtherNet/IP		89	755 **To Peer Period** To Peer Period Sets the minimum time that an adapter will wait when transmitting data to a peer. **Important:** Changes to this parameter are ignored when P91 [To Peer Enable] is 0 "Off."	Units: Default: Min/Max:	Secs 10.00 0.01 / 10.00	RW	Real
		90	755 **To Peer Skip** To Peer Skip Sets the maximum time that an adapter will wait when transmitting data to a peer. The value of P89 [To Peer Period] is multiplied by the value of this parameter to set the time. Important: Changes to this parameter are ignored when P91 [To Peer Enable] is 0 "Off."	Default: Min/Max:	1 1 / 16	RW	32-bit Integer
		91	755 **To Peer Enable** To Peer Enable Controls whether Peer I/O output is operating. A value of 0 "Off" turns off Peer I/O output. A value of 1 "Cmd/Ref" overrides the settings in Parameters P31 [DL To Net 15], P32 [DL To Net 16], P76 [DLs Fr Peer Cfg], and P77 [DLs Fr Peer Act], and automatically sends the drive's present Logic Command (as Datalink 01) and Reference (as Datalink 02). A value of 2 "Custom" enables Peer I/O output using the Datalink count and settings provided by the user.	Default: Options:	0 = "Off" 0 = "Off" 1 = "Cmd/Ref" 2 = "Custom"	RW	32-bit Integer

Communication Configurations

20-COMM-* Network Adapter Compatibility

Some 20-COMM adapters can be used with PowerFlex 750-Series drives. See "20-COMM Carrier" in the Installation Instructions, publication 750-IN001, for more information.

IMPORTANT When a 20-COMM Carrier (20-750-20COMM) is used to install a 20-COMM adapter on a 750-Series drive, the upper word (Bits 16…31) of the Logic Command Word and Logic Status Word are not accessible. The upper word is only used and accessible on 750-Series communication modules (20-750-*) and the embedded EtherNet/IP on PowerFlex 755 drives.

Typical Programmable Controller Configurations

IMPORTANT If block transfers are programmed to continuously write information to the drive, care must be taken to properly format the block transfer. If attribute 10 is selected for the block transfer, values will be written only to RAM and will not be saved by the drive. This is the preferred attribute for continuous transfers. If attribute 9 is selected, each program scan will complete a write to the drives non-volatile memory (EEprom). Since the EEprom has a fixed number of allowed writes, continuous block transfers will quickly damage the EEprom. Do Not assign attribute 9 to continuous block transfers. Refer to the individual communications adapter User Manual for additional details.

Logic Command/Status Words

Table 4 - Logic Command Word

Logic Bits																																Command	Description
31	30	29	28	27	26	25	24	23	22	21	20	19	18	17	16	15	14	13	12	11	10	9	8	7	6	5	4	3	2	1	0		
																															X	Normal Stop	0 = Not Normal Stop 1 = Normal Stop
																														X		Start (1)	0 = Not Start 1 = Start
																													X			Jog 1 (2)	0 = Not Jog 1 (Par. 556) 1 = Jog 1
																												X				Clear Fault (3)	0 = Not Clear Fault 1 = Clear Fault
																										X	X					Unipolar Direction	00 = No Command 01 = Forward Command 10 = Reverse Command 11 = Hold Direction Control
																									X							Manual	0 = Not Manual 1 = Manual
																								X								Reserved	
																						X	X									Accel Time	00 = No Command 01 = Use Accel Time 1 (Par. 535) 10 = Use Accel Time 2 (Par. 536) 11 = Use Present Time
																				X	X											Decel Time	00 = No Command 01 = Use Decel Time 1 (Par. 537) 10 = Use Decel Time 2 (Par. 538) 11 = Use Present Time
																			X													Ref Select 1	000 = No Command 001 = Ref A Select (Par. 545) 010 = Ref B Select (Par. 550) 011 = Preset 3 (Par. 573) 100 = Preset 4 (Par. 574) 101 = Preset 5 (Par. 575) 110 = Preset 6 (Par. 576) 111 = Preset 7 (Par. 577)
																		X														Ref Select 2	
																	X															Ref Select 3	
																X																Emrg OvrRide	0 = (Not set or clear) Emergency Override 1 = Set Emergency Override
															X																	Coast Stop	0 = Not Coast to Stop 1 = Coast to Stop
														X																		Current Limit Stop	0 = Not Current Limit Stop 1 = Current Limit Stop
													X																			Run (4)	0 = Not Run 1 = Run
												X																				Jog 2 (2)	0 = Not Jog 2 (Par. 557) 1 = Jog 2
											X																					Reserved	
										X																						Reserved	
									X																							Reserved	
								X																								Reserved	
							X																									Reserved	
						X																										Reserved	
					X																											Reserved	
				X																												Reserved	
			X																													Reserved	
		X																														Reserved	
	X																															Reserved	
X																																Reserved	

(1) A Not Stop condition (logic bit 0 = 0) must first be present before a 1 = Start condition will start the drive.

(2) A Not Stop condition (logic bit 0 = 0) must first be present before a 1 = Jog 1/Jog 2 condition will jog the drive. A transition to a "0" will stop the drive.

(3) To perform this command, the value must switch from "0" to "1."

(4) A Not Stop condition (logic bit 0 = 0) must first be present before a 1 = Run condition will run the drive. A transition to a "0" will stop the drive.

Table 5 - Logic Status Word

Logic Bits																													
31	30	29	28	27	26	25	24	23	22	21	20	19	18	17	16	15	14	13	12	11	10	9	8	7	6	5	4	3	2	1	0	Command	Description
																															x	Run Ready	0 = Not Ready to Run 1 = Ready to Run
																														x		Active	0 = Not Active 1 = Active
																													x			Command Direction	0 = Reverse 1 = Forward
																												x				Actual Direction	0 = Reverse 1 = Forward
																											x					Accelerating	0 = Not Accelerating 1 = Accelerating
																										x						Decelerating	0 = Not Decelerating 1 = Decelerating
																									x							Alarm	0 = No Alarm (Par. 959 & 960) 1 = Alarm
																								x								Fault	0 = No Fault (Par. 952 & 953) 1 = Fault
																							x									At Setpt Spd	0 = Not at Setpoint Speed 1 = At Setpoint Speed
																						x										Manual	0 = Manual Mode Not Active 1 = Manual Mode Active
																					x											Spd Ref ID 0	00000 = Reserved 00001 = Auto Ref A (par. 545) 00010 = Auto Ref B (par. 550) 00011 = Auto Preset Speed 3 (Par. 573) 00100 = Auto Preset Speed 4 (Par. 574) 00101 = Auto Preset Speed 5 (Par. 575) 00110 = Auto Preset Speed 6 (Par. 576) 00111 = Auto Preset Speed 7 (Par. 577) 01000 = Reserved 01001 = Reserved 01010 = Reserved 01011 = Reserved 01100 = Reserved 01101 = Reserved 01110 = Reserved 01111 = Reserved 10000 = Man Port 0 10001 = Man Port 1 10010 = Man Port 2 10011 = Man Port 3 10100 = Man Port 4 10101 = Man Port 5 10110 = Man Port 6 10111 = Reserved 11000 = Reserved 11001 = Reserved 11010 = Reserved 11011 = Reserved 11100 = Reserved 11101 = Man Port 13 (Emb. ENET) 11110 = Man Port 14 (Drive Logix) 11111 = Alternate Man Ref Sel
																				x												Spd Ref ID 1	
																			x													Spd Ref ID 2	
																		x														Spd Ref ID 3	
																	x															Spd Ref ID 4	
																x																Emrg OvrRide	0 = (Not set or clear) Emergency Override 1 = Set Emergency Override
															x																	Running	0 = Not Running 1 = Running
														x																		Jogging	0 = Not Jogging (Par. 556 & 557) 1 = Jogging
													x																			Stopping	0 = Not Stopping 1 = Stopping
												x																				DC Brake	0 = Not DC Brake 1 = DC Brake
											x																					DB Active	0 = Not Dynamic Brake Active 1 = Dynamic Brake Active
										x																						Speed Mode	0 = Not Speed Mode (Par. 309) 1 = Speed Mode
									x																							Position Mode	0 = Not Position Mode (Par. 309) 1 = Position Mode
								x																								Torque Mode	0 = Not Torque Mode (Par. 309) 1 = Torque Mode
							x																									At Zero Speed	0 = Not at Zero Speed 1 =At Zero Speed
						x																										At Home	0 = Not at Home 1 = At Home
					x																											At Limit	0 = Not at Limit 1 = At Limit
				x																												Current Limit	0 = Not at Current Limit 1 = At Current Limit
			x																													Bus Freq Reg	0 = Not Bus Freq Reg 1 = Bus Freq Reg
		x																														Enable On	0 = Not Enable On 1 = Enable On
	x																															Motor Overload	0 = Not Motor Overload 1 = Motor Overload
x																																Regen	0 = Not Regen 1= Regen

Embedded DeviceLogix (Port 14) Parameters

File	Group	No.	Display Name Full Name Description	Values		Read-Write	Data Type
Embedded DeviceLogix	Analog Outputs	**1** Thru **14**	**DLX Out 01** **DLX Out 14** Fourteen floating point outputs that can be controlled by the DeviceLogix program. These are typically mapped to a parameter to write its value. It can also be mapped to the Reference Command.	Default: Min/Max:	0 0 / 159999	RW	32-bit Real
		15 **16**	**DLX Out 15** **DLX Out 16** Two unsigned 32-bit integer outputs that can be controlled by the DeviceLogix program. These are typically mapped to a parameter to write its value.	Default: Min/Max:	0 0 / 159999	RW	32-bit Integer
	Analog Inputs	**17** Thru **30**	**DLX In 01** **DLX In 14** Fourteen floating point inputs that can be read by the DeviceLogix program. These are typically mapped to a parameter to read its value. It can also be mapped to Common Feedback.	Default: Min/Max:	0 0 / 159999	RW	32-bit Real
		31 **32**	**DLX In 15** **DLX In 16** Two unsigned 32-bit integer inputs that can be read by the DeviceLogix program. These are typically mapped to a parameter to read its value. It can also be mapped to Real Time Clock values.	Default: Min/Max:	0 0 / 159999.15	RW	32-bit Integer
	Digital Inputs	**33** Thru **48**	**DLX DIP 01** **DLX DIP 16** Sixteen digital inputs that can be read by the DeviceLogix program. These are typically mapped to an input point in an I/O option module or to Logic Status bits.	Default: Min/Max:	0.00 0 / 159999.15	RW	32-bit Integer
	Status & Cntl	**49**	**DLX DigIn Sts** Provides the individual on/off status of the 16 DLX DIP's.			RO	16-bit Integer
		50	**DLX DigOut Sts** Provides the individual on/off status of the DLX Logic Command word bits.			RO	32-bit Integer

49 — DLX DigIn Sts

Options	DLX DIPVal16	DLX DIPVal15	DLX DIPVal14	DLX DIPVal13	DLX DIPVal12	DLX DIPVal11	DLX DIPVal10	DLX DIPVal9	DLX DIPVal8	DLX DIPVal7	DLX DIPVal6	DLX DIPVal5	DLX DIPVal4	DLX DIPVal3	DLX DIPVal2	DLX DIPVal1
Default	0	0	0	0	0	0	0	0	0	0	0	0	0	0	0	0
Bit	15	14	13	12	11	10	9	8	7	6	5	4	3	2	1	0

0 = Condition Off
1 = Condition On

50 — DLX DigOut Sts

Options	Reserved	Reserved	Reserved	Reserved	Reserved	Reserved	Reserved	Reserved	Reserved	Reserved	Reserved	Reserved	Reserved	Reserved	Reserved	Reserved	DLX CmdSts16	DLX CmdSts15	DLX CmdSts14	DLX CmdSts13	DLX CmdSts12	DLX CmdSts11	DLX CmdSts10	DLX CmdSts9	DLX CmdSts8	DLX CmdSts7	DLX CmdSts6	DLX CmdSts5	DLX CmdSts4	DLX CmdSts3	DLX CmdSts2	DLX CmdSts1
Default	0	0	0	0	0	0	0	0	0	0	0	0	0	0	0	0	0	0	0	0	0	0	0	0	0	0	0	0	0	0	0	0
Bit	31	30	29	28	27	26	25	24	23	22	21	20	19	18	17	16	15	14	13	12	11	10	9	8	7	6	5	4	3	2	1	0

0 = Condition Off
1 = Condition On

File	Group	No.	Display Name Full Name Description	Values		Read-Write	Data Type
Embedded DeviceLogix	Status & Cntl	51	**DLX DigOut Sts2** Provides the individual on/off status of the 16 DLX DOPs.			RO	32-bit Integer
		52	**DLX Prog Cond** Defines the action that will be taken when the DLX logic is disabled. "Fault" (0) – Drive is faulted and stopped. "Stop" (1) – Drive is stopped, but not faulted. "Zero Data" (2) – Output data sent to the drive from DLX is zeroed (does not command a stop). "Hold Last" (3) – Drive continues in its present state.	Default: Options:	0 = "Fault" 0 = "Fault" 1 = "Stop" 2 = "Zero Data" 3 = "Hold Last"	RW	32-bit Integer
		53	**DLX Operation** Contains both operation commands as well as status information.	Default: Options:	5 = "Logic Disabled" 0 = "Enable Logic" 1 = "Disable Logic" 2 = "Reset Program" 3 = "Save Program" 4 = "Load Program" 5 = "Logic Disabled" 6 = "Logic Enabled"	RW	32-bit Integer

Options

Bit	31	30	29	28	27	26	25	24	23	22	21	20	19	18	17	16	15	14	13	12	11	10	9	8	7	6	5	4	3	2	1	0
	Reserved	Reserved	Reserved	Reserved	Reserved	Reserved	Reserved	Reserved	Reserved	Reserved	Reserved	Reserved	Reserved	Reserved	Reserved	Reserved	DLX DOPSts16	DLX DOPSts15	DLX DOPSts14	DLX DOPSts13	DLX DOPSts12	DLX DOPSts11	DLX DOPSts10	DLX DOPSts9	DLX DOPSts8	DLX DOPSts7	DLX DOPSts6	DLX DOPSts5	DLX DOPSts4	DLX DOPSts3	DLX DOPSts2	DLX DOPSts1
Default	0	0	0	0	0	0	0	0	0	0	0	0	0	0	0	0	0	0	0	0	0	0	0	0	0	0	0	0	0	0	0	0

0 = Condition Off
1 = Condition On

File	Group	No.	Display Name Full Name Description	Values		Read-Write	Data Type
Embedded DeviceLogix	Internal Regs	**54** Thru **69**	**DLX Real SP1** **DLX Real SP16** Sixteen 32-bit Real scratchpad registers for DLX program use.	Default: Min/Max:	0 –/+220000000	RW	Real
		70 Thru **77**	**DLX DINT SP1** **DLX DINT SP8** Eight 32-bit Integer scratchpad registers for DLX program use.	Default: Min/Max:	0 –2147483648 / 2147483647	RW	32-bit Integer
		78 Thru **81**	**DLX Bool SP1** **DLX Bool SP4** Four 32-bit Boolean scratchpad registers (128 bits total) for DLX program use.			RW	32-bit Integer

Options	Bit 31	Bit 30	Bit 29	Bit 28	Bit 27	Bit 26	Bit 25	Bit 24	Bit 23	Bit 22	Bit 21	Bit 20	Bit 19	Bit 18	Bit 17	Bit 16	Bit 15	Bit 14	Bit 13	Bit 12	Bit 11	Bit 10	Bit 9	Bit 8	Bit 7	Bit 6	Bit 5	Bit 4	Bit 3	Bit 2	Bit 1	Bit 0
Default	0	0	0	0	0	0	0	0	0	0	0	0	0	0	0	0	0	0	0	0	0	0	0	0	0	0	0	0	0	0	0	0
Bit	31	30	29	28	27	26	25	24	23	22	21	20	19	18	17	16	15	14	13	12	11	10	9	8	7	6	5	4	3	2	1	0

0 = Condition Off
1 = Condition On

		82 Thru **89**	**DLX Real In SP1** **DLX Real In SP8** Eight 32-bit Real scratchpad registers for DLX program input use.	Default: Min/Max:	0 –/+220000000	RW	Real
		90 Thru **97**	**DLX Real OutSP1** **DLX Real OutSP8** Eight 32-bit Real scratchpad registers for DLX program output use.	Default: Min/Max:	0 –/+220000000	RW	Real
		98 Thru **101**	**DLX DINT InSP1** **DLX DINT InSP4** Four 32-bit Integer scratchpad registers for DLX program input use.	Default: Min/Max:	0 –2147483648 / 2147483647	RW	32-bit Integer
		102 Thru **105**	**DLX DINT OutSP1** **DLX DINT OutSP4** Four 32-bit Integer scratchpad registers for DLX program output use.	Default: Min/Max:	0 –2147483648 / 2147483647	RW	32-bit Integer

11-Series I/O Module Parameters

File	Group	No.	Display Name Full Name Description	Values	Read-Write	Data Type
11-Series I/O	Digital Inputs	1	**Dig In Sts** Digital Input Status Status of the digital inputs.		RO	16-bit Integer
		2	**Dig In Filt Mask** Digital Input Filter Mask Filters the selected digital input. **Important:** Only used by 11-Series I/O Module models 20-750-1133C-1R2T and 20-750-1132C-2R. (Modules with 24V DC inputs.)		RW	16-bit Integer
		3	**Dig In Filt** Digital Input Filter Sets the amount of filtering on the digital inputs. **Important:** Only used by 11-Series I/O Module models 20-750-1133C-1R2T and 20-750-1132C-2R. (Modules with 24V DC inputs.)	Units: mS Default: 4 Min/Max: 2 / 10	RW	32-bit Integer

No. 1 — Dig In Sts

Options	Reserved	Reserved	Reserved	Reserved	Reserved	Reserved	Reserved	Reserved	Reserved	Reserved	Reserved	Reserved	Reserved	Reserved	Input 2	Input 1	Input 0
Default	0	0	0	0	0	0	0	0	0	0	0	0	0	0	0	0	0
Bit	15	14	13	12	11	10	9	8	7	6	5	4	3	2	1	0	

0 = Input Not Activated
1 = Input Activated

No. 2 — Dig In Filt Mask

Options	Reserved	Reserved	Reserved	Reserved	Reserved	Reserved	Reserved	Reserved	Reserved	Reserved	Reserved	Reserved	Reserved	Reserved	Input 2	Input 1	Input 0
Default	0	0	0	0	0	0	0	0	0	0	1	1	1	1	1	1	1
Bit	15	14	13	12	11	10	9	8	7	6	5	4	3	2	1	0	

0 = Input Not Filtered
1 = Input Filtered

File	Group	No.	Display Name Full Name Description	Values	Read-Write	Data Type
11-Series I/O	Digital Outputs	5	**Dig Out Sts** Digital Output Status Status of the digital outputs.		RO	16-bit Integer

No. 5 — Dig Out Sts

Options	Reserved	Reserved	Reserved	Reserved	Reserved	Reserved	Reserved	Reserved	Reserved	Reserved	Reserved	Reserved	Reserved	Trans Out 1 (2)	Trans Out 0 (1)	Relay Out 0
Default	0	0	0	0	0	0	0	0	0	0	0	0	0	0	0	0
Bit	15	14	13	12	11	10	9	8	7	6	5	4	3	2	1	0

0 = Output De-energized
1 = Output Energized

(1) Bit 1 = "Trans Out 0" for 11-Series I/O Module model 20-750-1133C-1R2T
= "Relay Out 1" for 11-Series I/O Module models 20-750-1132C-2R and 20-750-1132D-2R
(2) Bit 2 is only used by 11-Series I/O Module 20-750-1133C-1R2T

File	Group	No.	Display Name Full Name Description	Values	Read-Write	Data Type
11-Series I/O	Digital Outputs	6	**Dig Out Invert** Digital Output Invert Inverts the selected digital output.		RW	16-bit Integer

Options	Reserved	Reserved	Reserved	Reserved	Reserved	Reserved	Reserved	Reserved	Reserved	Reserved	Reserved	Reserved	Reserved	Trans Out 1 (2)	Trans Out 0 (1)	Relay Out 0
Default	0	0	0	0	0	0	0	0	0	0	0	0	0	0	0	0
Bit	15	14	13	12	11	10	9	8	7	6	5	4	3	2	1	0

0 = Output Not Inverted
1 = Output Inverted

(1) Bit 1 = "Trans Out 0" for 11-Series I/O Module model 20-750-1133C-1R2T
= "Relay Out 1" for 11-Series I/O Module models 20-750-1132C-2R and 20-750-1132D-2R
(2) Bit 2 is only used by 11-Series I/O Module 20-750-1133C-1R2T

		7	**Dig Out Setpoint** Digital Output Setpoint Controls Relay or Transistor Outputs when chosen as the source. Can be used to control outputs from a communication device using DataLinks.		RW	16-bit Integer

Options	Reserved	Reserved	Reserved	Reserved	Reserved	Reserved	Reserved	Reserved	Reserved	Reserved	Reserved	Reserved	Reserved	Trans Out 1 (2)	Trans Out 0 (1)	Relay Out 0
Default	0	0	0	0	0	0	0	0	0	0	0	0	0	0	0	0
Bit	15	14	13	12	11	10	9	8	7	6	5	4	3	2	1	0

0 = Output De-energized
1 = Output Energized

(1) Bit 1 = "Trans Out 0" for 11-Series I/O Module model 20-750-1133C-1R2T
= "Relay Out 1" for 11-Series I/O Module models 20-750-1132C-2R and 20-750-1132D-2R
(2) Bit 2 is only used by 11-Series I/O Module 20-750-1133C-1R2T

		10	**RO0 Sel** Relay Output 0 Select Selects the source that will energize the relay output. Any status parameter bit can be used as an output source. For example P935 [Drive Status 1] Bit 7 "Faulted." For Torque Proving set to Port 0, parameter 1103 Bit 4. Use N.O. for safety.	Default: Min/Max:	0.00 (Disabled) 0.00 / 159999.15	RW	32-bit Integer
		11	**RO0 Level Sel** Relay Output 0 Level Select Selects the source of the level that will be compared.	Default: Min/Max:	0 (Disabled) 0 / 159999	RW	32-bit Integer
		12	**RO0 Level** Relay Output 0 Level Sets the level compare value.	Default: Min/Max:	0.0 –/+1000000.0	RW	Real
		13	**RO0 Level CmpSts** Relay Output 0 Level Compare Status Status of the level compare, and a possible source for a relay or transistor output. Relay Output *n* Select or Transistor Output *n* Select must have this selected to energize the output. Can be used without a physical output as status information only.		RO	16-bit Integer

Options	Reserved	Reserved	Reserved	Reserved	Reserved	Reserved	Reserved	Reserved	Reserved	Reserved	Reserved	Reserved	AbsGrtThanEq	Abs Less Than	Grt Than Equ	Less Than
Default	0	0	0	0	0	0	0	0	0	0	0	0	0	0	0	0
Bit	15	14	13	12	11	10	9	8	7	6	5	4	3	2	1	0

0 = Condition False
1 = Condition True

Bit 0 "Less Than" – Level source is less than the level value.
Bit 1 "Grt Than Equ" – Level source is greater than or equal to the level value.
Bit 2 "Abs Less Than" – Absolute value of the level source is less than the absolute value of the level value.
Bit 3 "AbsGrtThanEq" – Absolute value of the level source is greater than or equal to the absolute value of the level value.

File	Group	No.	Display Name Full Name Description	Values		Read-Write	Data Type
11-Series I/O	Digital Outputs	14	**RO0 On Time** Relay Output 0 On Time Sets the "ON Delay" time for the digital outputs. This is the time between the occurrence of a condition and activation of the relay.	Units: Default: Min/Max:	Secs 0.0 0.0 / 600.0	RW	Real
		15	**RO0 Off Time** Relay Output 0 Off Time Sets the "OFF Delay" time for the digital outputs. This is the time between the disappearance of a condition and de-activation of the relay.	Units: Default: Min/Max:	Secs 0.0 0.0 / 600.0	RW	Real
		20	**RO1 Sel** Relay Output 1 Select – 11-Series I/O Module model 20-750-1132C-2R or 20-750-1132D-2R is installed. **TO0 Sel** Transistor Output 0 Select – 11-Series I/O Module model 20-750-1133C-1R2T is installed. Selects the source that will energize the relay or transistor output. Any status parameter bit can be used as an output source. For example P935 [Drive Status 1] Bit 7 "Faulted."	Default: Min/Max:	0.00 (Disabled) 0.00 / 159999.15	RW	32-bit Integer
		21	**RO1 Level Sel** Relay Output 1 Level Select – 11-Series I/O Module model 20-750-1132C-2R or 20-750-1132D-2R is installed. **TO0 Level Sel** Transistor Output 0 Level Select – 11-Series I/O Module model 20-750-1133C-1R2T is installed. Selects the source of the level that will be compared.	Default: Min/Max:	0 (Disabled) 0 / 159999	RW	32-bit Integer
		22	**RO1 Level** Relay Output 1 Level – 11-Series I/O Module model 20-750-1132C-2R or 20-750-1132D-2R is installed. **TO0 Level** Transistor Output 0 Level – 11-Series I/O Module model 20-750-1133C-1R2T is installed. Sets the level compare value.	Default: Min/Max:	0.0 –/+1000000.0	RW	Real
		23	**RO1 Level CmpSts** Relay Output 1 Level Compare Status – 11-Series I/O Module model 20-750-1132C-2R or 20-750-1132D-2R is installed. **TO0 Level CmpSts** Transistor Output 0 Level Compare Status – 11-Series I/O Module model 20-750-1133C-1R2T is installed. Status of the level compare, and a possible source for a relay or transistor output. Relay Output *n* Select or Transistor Output *n* Select must have this selected to energize the output. Can be used without a physical output as status information only. Bit 0 "Less Than" – Level source is less than the level value. Bit 1 "Grt Than Equ" – Level source is greater than or equal to the level value. Bit 2 "Abs Less Than" – Absolute value of the level source is less than the absolute value of the level value. Bit 3 "AbsGrtThanEq" – Absolute value of the level source is greater than or equal to the absolute value of the level value.			RO	16-bit Integer
		24	**RO1 On Time** Relay Output 1 On Time – 11-Series I/O Module model 20-750-1132C-2R or 20-750-1132D-2R is installed. **TO0 On Time** Transistor Output 0 On Time – 11-Series I/O Module model 20-750-1133C-1R2T is installed. Sets the "ON Delay" time for the digital outputs. This is the time between the occurrence of a condition and activation of the relay or transistor.	Units: Default: Min/Max:	Secs 0.0 0.0 / 600.0	RW	Real

Options	Reserved	Reserved	Reserved	Reserved	Reserved	Reserved	Reserved	Reserved	Reserved	Reserved	Reserved	Reserved	AbsGrtThanEq	Abs Less Than	Grt Than Equ	Less Than
Default	0	0	0	0	0	0	0	0	0	0	0	0	0	0	0	0
Bit	15	14	13	12	11	10	9	8	7	6	5	4	3	2	1	0

0 = Condition False
1 = Condition True

File	Group	No.	Display Name Full Name Description	Values		Read-Write	Data Type
11-Series I/O	Digital Outputs	25	**RO1 Off Time** Relay Output 1 Off Time – 11-Series I/O Module model 20-750-1132C-2R or 20-750-1132D-2R is installed. **TO0 Off Time** Transistor Output 0 Off Time – 11-Series I/O Module model 20-750-1133C-1R2T is installed. Sets the "OFF Delay" time for the digital outputs. This is the time between the disappearance of a condition and de-activation of the relay or transistor.	Units: Default: Min/Max:	Secs 0.0 0.0 / 600.0	RW	Real
		30	**TO1 Sel** Transistor Output 1 Select Selects the source that will energize the transistor output. Any status parameter bit can be used as an output source. For example P935 [Drive Status 1] Bit 7 "Faulted." **Important:** Only used by 11-Series I/O Module model 20-750-1133C-1R2T.	Default: Min/Max:	0 (Disabled) 0 / 159999	RW	32-bit Integer
		31	**TO1 Level Sel** Transistor Output 1 Level Select Selects the source of the level that will be compared. **Important:** Only used by 11-Series I/O Module model 20-750-1133C-1R2T.	Default: Min/Max:	0 (Disabled) 0 / 159999	RW	32-bit Integer
		32	**TO1 Level** Transistor Output 1 Level Sets the level compare value. **Important:** Only used by 11-Series I/O Module model 20-750-1133C-1R2T.	Default: Min/Max:	0.0 –/+1000000.0	RW	Real
		33	**TO1 Level CmpSts** Transistor Output 1 Level Compare Status Status of the level compare, and a possible source for a transistor output. Transistor Output *n* Select must have this selected to energize the output. Can be used without a physical output as status information only. Options: Reserved, Reserved, Reserved, Reserved, Reserved, Reserved, Reserved, Reserved, Reserved, Reserved, Reserved, Reserved, AbsGrtThanEq, Abs Less Than, Grt Than Equ, Less Than Default: 0 0 0 0 0 0 0 0 0 0 0 0 0 0 0 0 Bit: 15 14 13 12 11 10 9 8 7 6 5 4 3 2 1 0 0 = Condition False 1 = Condition True Bit 0 "Less Than" – Level source is less than the level value. Bit 1 "Grt Than Equ" – Level source is greater than or equal to the level value. Bit 2 "Abs Less Than" – Absolute value of the level source is less than the absolute value of the level value. Bit 3 "AbsGrtThanEq" – Absolute value of the level source is greater than or equal to the absolute value of the level value. **Important:** Only used by 11-Series I/O Module model 20-750-1133C-1R2T.			RO	16-bit Integer
		34	**TO1 On Time** Transistor Output 1 On Time Sets the "ON Delay" time for the digital outputs. This is the time between the occurrence of a condition and activation of the transistor. **Important:** Only used by 11-Series I/O Module model 20-750-1133C-1R2T.	Units: Default: Min/Max:	Secs 0.0 0.0 / 600.0	RW	Real
		35	**TO1 Off Time** Transistor Output 1 Off Time Sets the "OFF Delay" time for the digital outputs. This is the time between the disappearance of a condition and de-activation of the transistor. **Important:** Only used by 11-Series I/O Module model 20-750-1133C-1R2T.	Units: Default: Min/Max:	Secs 0.0 0.0 / 600.0	RW	Real

File	Group	No.	Display Name Full Name Description	Values	Read-Write	Data Type
11-Series I/O	Motor PTC	41	**ATEX Sts** ATEX Status This parameter is not latched and only displays the current status of the ATEX thermal sensor. When an ATEX fault is present, the corresponding bit value is 1. When motor temperature is within the optimal range, the bit value is 0. This parameter is available only when an ATEX option module is installed.		RO	16-bit Integer

Options	Reserved	PTC Selected	Thermostat	Reserved	Reserved	Reserved	Reserved	Reserved	Reserved	Reserved	Reserved	Reserved	Voltage Loss	Over Temp	Short Cirkt	ThrmIsnsor OK
Default	0	0	0	0	0	0	0	0	0	0	0	0	0	0	0	0
Bit	15	14	13	12	11	10	9	8	7	6	5	4	3	2	1	0

0 = Condition False
1 = Condition True

Bit 0 “ThrmIsnsor OK” – Thermal sensor is Ok.
Bit 1 “Short Cirkt” – Short circuit fault detected by thermal sensor.
Bit 2 “Over Temp” – Over temperature fault is detected by thermal sensor.
Bit 3 “Voltage Loss” – Voltage loss fault has taken place on ATEX board.
Bit 13 “Thermostat” – Thermostat input has been selected.
Bit 14 “PTC Selected” – PTC input has been selected.

File	Group	No.	Display Name Full Name Description	Values	Read-Write	Data Type
11-Series I/O	Analog Inputs	45	**AnIg In Type** Analog Input Type Status of the analog input mode set by the option jumpers. Options: Reserved, Reserved, Reserved, Reserved, Reserved, Reserved, Reserved, Reserved, Reserved, Reserved, Reserved, Reserved, Reserved, Reserved, Reserved, Analog 0 Default: 0 0 0 0 0 0 0 0 0 0 0 0 0 0 0 0 Bit: 15 14 13 12 11 10 9 8 7 6 5 4 3 2 1 0	0 = Voltage Mode 1 = Current Mode	RO	16-bit Integer
		46	**AnIg In Sqrt** Analog Input Square Root Enables/disables the square root function for each input. Options: Reserved, Reserved, Reserved, Reserved, Reserved, Reserved, Reserved, Reserved, Reserved, Reserved, Reserved, Reserved, Reserved, Reserved, Reserved, Analog 0 Default: 0 0 0 0 0 0 0 0 0 0 0 0 0 0 0 0 Bit: 15 14 13 12 11 10 9 8 7 6 5 4 3 2 1 0	0 = Square Root Disabled 1 = Square Root Enabled	RW	16-bit Integer
		47	**AnIg In Loss Sts** Analog Input Loss Status Status of the analog input loss. Options: Reserved, Reserved, Reserved, Reserved, Reserved, Reserved, Reserved, Reserved, Reserved, Reserved, Reserved, Reserved, Reserved, Reserved, Loss0, Loss Default: 0 0 0 0 0 0 0 0 0 0 0 0 0 0 0 0 Bit: 15 14 13 12 11 10 9 8 7 6 5 4 3 2 1 0 Bit 0 "Loss" – Indicates loss of input. Bit 1 "Loss0" – Indicates loss of input.	0 = No Loss 1 = Loss Detected	RO	16-bit Integer

File	Group	No.	Display Name Full Name Description	Values		Read-Write	Data Type
11-Series I/O	Analog Inputs	50	**AnIg In0 Value** Analog Input 0 Value Value of the Analog input after filter, square root, and loss action.	Units: Default: Min/Max:	Volt mA 0.000 Volts 0.000 mA –/+10.000 Volts 0.000 / 20.000 mA	RO	Real
		51	**AnIg In0 Hi** Analog Input 0 High Sets the highest input value to the analog input scaling block.	Units: Default: Min/Max:	Volt mA 10.000 Volts 20.000 mA –/+10.000 Volts 0.000 / 20.000 mA	RW	Real
		52	**AnIg In0 Lo** Analog Input 0 Low Sets the lowest input value to the analog input scaling block.	Units: Default: Min/Max:	Volt mA 0.000 Volts 0.000 mA –/+10.000 Volts 0.000 / 20.000 mA	RW	Real
		53	**AnIg In0 LssActn** Analog Input 0 Loss Action Selects drive action when an analog signal loss is detected. Signal loss is defined as an analog signal less than 1V or 2mA. The signal loss event ends and normal operation resumes when the input signal level is greater than or equal to 1.5V or 3mA. "Ignore" (0) – No action is taken. "Alarm" (1) – Type 1 alarm indicated. "Flt Minor" (2) – Minor fault indicated. If running, drive continues to run. Enable with P950 [Minor Flt Cfg]. If not enabled, acts like a major fault. "FltCoastStop" (3) – Major fault indicated. Coast to Stop. "Flt RampStop" (4) – Major fault indicated. Ramp to Stop. "Flt CL Stop" (5) – Major fault indicated. Current Limit Stop. "Hold Input" (6) – Holds input at last value. "Set Input Lo" (7) – Sets input to P52 [AnIg In0 Lo]. "Set Input Hi" (8) – Sets input to P51 [AnIg In0 Hi].	Default: Options:	0 = "Ignore" 0 = "Ignore" 1 = "Alarm" 2 = "Flt Minor" 3 = "FltCoastStop" 4 = "Flt RampStop" 5 = "Flt CL Stop" 6 = "Hold Input" 7 = "Set Input Lo" 8 = "Set Input Hi"	RW	32-bit Integer
		54	**AnIg In0 Raw Val** Analog Input 0 Raw Value Raw Value of the analog input.	Units: Default: Min/Max:	Volt mA 0.000 Volts 0.000 mA –/+10.000 Volts 0.000 / 20.000 mA	RO	Real
		55	**AnIg In0 Filt Gn** Analog Input 0 Filter Gain Sets the analog input filter gain. Recommended settings: **Low Gain** | **High Gain** 0.70 | 0.50	Default: Min/Max:	1.00 –/+5.00	RW	Real
		56	**AnIg In0 Filt BW** Analog Input 0 Filter Bandwidth Sets the analog input filter bandwidth. Recommended settings: **Low Gain** | **High Gain** 35.0 | 20.0	Default: Min/Max:	0.0 0.0 / 500.0	RW	Real

File	Group	No.	Display Name Full Name Description	Values		Read-Write	Data Type
11-Series I/O	Analog Outputs	70	**Anlg Out Type** Analog Output Type Select the analog output mode for each analog output. Options: Reserved (15–1), Analog 0 (0) Default: 0 0 0 0 0 0 0 0 0 0 0 0 0 0 0 0 Bit: 15 14 13 12 11 10 9 8 7 6 5 4 3 2 1 0 0 = Voltage Mode 1 = Current Mode			RW	16-bit Integer
		71	**Anlg Out Abs** Analog Output Absolute Selects whether the signed value or absolute value of a parameter is used before being scaled to drive the analog output. Options: Reserved (15–1), Analog 0 (0) Default: 0 0 0 0 0 0 0 0 0 0 0 0 0 0 1 1 Bit: 15 14 13 12 11 10 9 8 7 6 5 4 3 2 1 0 0 = Condition False 1 = Condition True			RW	16-bit Integer
		75	**Anlg Out0 Sel** Analog Output 0 Select Selects the source for the analog output.	Default: Min/Max:	3 0 / 159999	RW	32-bit Integer
		76	**Anlg Out0 Stpt** Analog Output 0 Setpoint A possible source for an analog output. Can be used to control an analog output from a communication device using a DataLink. Not affected by analog output scaling.	Units: Default: Min/Max:	Volt mA 10.000 Volts 20.000 mA –/+10.000 Volts 0.000 / 20.000 mA	RW	Real
		77	**Anlg Out0 Data** Analog Output 0 Data Displays the value of the source selected by P75 [Anlg Out0 Sel].	Default: Min/Max:	0 –/+100000	RO	Real
		78	**Anlg Out0 DataHi** Analog Output 0 Data High Sets the high value for the data range of analog out scale.	Units: Default: Min/Max:	pu 1 –/+21474800	RW	Real
		79	**Anlg Out0 DataLo** Analog Output 0 Data Low Sets the low value for the data range of analog out scale.	Default: Min/Max:	1 –/+21474800	RW	Real
		80	**Anlg Out0 Hi** Analog Output 0 High Sets the high value for the analog output value when the data value is at its maximum.	Units: Default: Min/Max:	Volt mA 10.000 Volts 20.000 mA –/+10.000 Volts 0.000 / 20.000 mA	RW	Real
		81	**Anlg Out0 Lo** Analog Output 0 Low Sets the low value for the analog output value when the data value is at its minimum.	Units: Default: Min/Max:	Volt mA 10.000 Volts 20.000 mA –/+10.000 Volts 0.000 / 20.000 mA	RW	Real

File	Group	No.	Display Name Full Name Description	Values		Read-Write	Data Type
11-Series I/O	Analog Outputs	82	**AnIg Out0 Val** Analog Output 0 Value Displays the analog output value.	Units: Default: Min/Max:	Volt mA 10.000 Volts 20.000 mA –/+10.000 Volts 0.000 / 20.000 mA	RO	Real

File	Group	No.	Display Name Full Name Description	Values		Read-Write	Data Type
11-Series I/O	Predictive Main	99	**PredMaint Sts** Predictive Maintenance Status Status of relay's predictive maintenance.			RO	16-bit Integer

Options	Master	Reserved	Reserved	Reserved	Reserved	Reserved	Reserved	Reserved	Reserved	Reserved	Reserved	Reserved	Reserved	Reserved	Relay Out 0(1)	Relay Out 0
Default	0	0	0	0	0	0	0	0	0	0	0	0	0	0	0	0
Bit	15	14	13	12	11	10	9	8	7	6	5	4	3	2	1	0

0 = Condition False
1 = Condition True

(1) Bit 1= "Relay Out 0" for 11-Series I/O Module models 20-750-1132C-2R and 20-750-1132D-2R

		100	**RO0 Load Type** Relay Output 0 Load Type Sets the type of load that will be applied to the relay. Must be properly set for the Predictive Maintenance function to predict the relay life.	Default: Options:	1 = "DC Inductive" 0 = "DC Resistive" 1 = "DC Inductive" 2 = "AC Resistive" 3 = "AC Inductive"	RW	32-bit Integer
		101	**RO0 Load Amps** Relay Output 0 Load Amps Load current that will be applied to the relay contacts. Must be properly set for the Predictive Maintenance function to approximate the relay life.	Units: Default: Min/Max:	Amps 2.000 0.000 / 2.000	RW	Real
		102	**RO0 TotalLife** Relay Output 0 Total Life Total life cycles of the relay based on programmed load type and amps.	Units: Default: Min/Max:	Cycl 0 0 / 2147483647	RO	32-bit Integer
		103	**RO0 ElapsedLife** Relay Output 0 Elapsed Life Non-resettable, total accumulated cycles of the relay.	Units: Default: Min/Max:	Cycl 0 0 / 2147483647	RO	32-bit Integer
		104	**RO0 RemainLife** Relay Output 0 Remaining Life The difference between the Total Life and the Elapsed Life.	Units: Default: Min/Max:	Cycl 0 0 / 2147483647	RO	32-bit Integer
		105	**RO0 LifeEvntLvl** Relay Output 0 Life Event Level Sets the percentage of relay life cycles before action is taken.	Units: Default: Min/Max:	% 80.000 0.000 / 100.000	RW	Real

File	Group	No.	Display Name Full Name Description	Values		Read-Write	Data Type
11-Series I/O	Predictive Main	**106**	**RO0 LifeEvntActn** Relay Output 0 Life Event Action Sets the action that will be taken when the percentage of relay life cycles has been reached. "Ignore" (0) – No action is taken. "Alarm" (1) – Type 1 alarm indicated. "Flt Minor" (2) – Minor fault indicated. If running, drive continues to run. Enable with P950 [Minor Flt Cfg]. If not enabled, acts like a major fault. "FltCoastStop" (3) – Major fault indicated. Coast to Stop. "Flt RampStop" (4) – Major fault indicated. Ramp to Stop. "Flt CL Stop" (5) – Major fault indicated. Current Limit Stop.	Default: Options:	1 = "Alarm" 0 = "Ignore" 1 = "Alarm" 2 = "Flt Minor" 3 = "FltCoastStop" 4 = "Flt RampStop" 5 = "Flt CL Stop"	RW	32-bit Integer
		110	**RO1 Load Type** Relay Output 1 Load Type Sets the type of load that will be applied to the relay. Must be properly set for the Predictive Maintenance function to predict the relay life. **Important:** Only used by 11-Series I/O Module models 20-750-1132C-2R and 20-750-1132D-2R.	Default: Options:	1 = "DC Inductive" 0 = "DC Resistive" 1 = "DC Inductive" 2 = "AC Resistive" 3 = "AC Inductive"	RW	32-bit Integer
		111	**RO1 Load Amps** Relay Output 1 Load Amps Load current that will be applied to the relay contacts. Must be properly set for the Predictive Maintenance function to approximate the relay life. **Important:** Only used by 11-Series I/O Module models 20-750-1132C-2R and 20-750-1132D-2R.	Units: Default: Min/Max:	Amps 2.000 0.000 / 2.000	RW	Real
		112	**RO1 TotalLife** Relay Output 1 Total Life Total life cycles of the relay based on programmed load type and amps. **Important:** Only used by 11-Series I/O Module models 20-750-1132C-2R and 20-750-1132D-2R.	Units: Default: Min/Max:	Cycl 0 0 / 2147483647	RO	32-bit Integer
		113	**RO1 ElapsedLife** Relay Output 1 Elapsed Life Non-resettable, total accumulated cycles of the relay. **Important:** Only used by 11-Series I/O Module models 20-750-1132C-2R and 20-750-1132D-2R.	Units: Default: Min/Max:	Cycl 0 0 / 2147483647	RO	32-bit Integer
		114	**RO1 RemainLife** Relay Output 1 Remaining Life The difference between the Total Life and the Elapsed Life. **Important:** Only used by 11-Series I/O Module models 20-750-1132C-2R and 20-750-1132D-2R.	Units: Default: Min/Max:	Cycl 0 0 / 2147483647	RO	32-bit Integer
		115	**RO1 LifeEvntLvl** Relay Output 1 Life Event Level Sets the percentage of relay life cycles before action is taken. **Important:** Only used by 11-Series I/O Module models 20-750-1132C-2R and 20-750-1132D-2R.	Units: Default: Min/Max:	% 80.000 0.000 / 100.000	RW	Real
		116	**RO1 LifeEvntActn** Relay Output 1 Life Event Action Sets the action that will be taken when the percentage of relay life cycles has been reached. **Important:** Only used by 11-Series I/O Module models 20-750-1132C-2R and 20-750-1132D-2R. "Ignore" (0) – No action is taken. "Alarm" (1) – Type 1 alarm indicated. "Flt Minor" (2) – Minor fault indicated. If running, drive continues to run. Enable with P950 [Minor Flt Cfg]. If not enabled, acts like a major fault. "FltCoastStop" (3) – Major fault indicated. Coast to Stop. "Flt RampStop" (4) – Major fault indicated. Ramp to Stop. "Flt CL Stop" (5) – Major fault indicated. Current Limit Stop.	Default: Options:	1 = "Alarm" 0 = "Ignore" 1 = "Alarm" 2 = "Flt Minor" 3 = "FltCoastStop" 4 = "Flt RampStop" 5 = "Flt CL Stop"	RW	32-bit Integer

22-Series I/O Module Parameters

File	Group	No.	Display Name Full Name Description	Values	Read-Write	Data Type
22-Series I/O	Digital Inputs	1	**Dig In Sts** Digital Input Status Status of the digital inputs.		RO	16-bit Integer
		2	**Dig In Filt Mask** Digital Input Filter Mask Filters the selected digital input. **Important:** Only used by 22-Series I/O Module models 20-750-2263C-1R2T and 20-750-2262C-2R. (Modules with 24V DC inputs.)		RW	16-bit Integer
		3	**Dig In Filt** Digital Input Filter Sets the amount of filtering on the digital inputs. **Important:** Only used by 22-Series I/O Module models 20-750-2263C-1R2T and 20-750-2262C-2R. (Modules with 24V DC inputs.)	Units: mS Default: 4 Min/Max: 2 / 10	RW	32-bit Integer

Options	Reserved	Reserved	Reserved	Reserved	Reserved	Reserved	Reserved	Reserved	Reserved	Reserved	Input 5	Input 4	Input 3	Input 2	Input 1	Input 0
Default	0	0	0	0	0	0	0	0	0	0	0	0	0	0	0	0
Bit	15	14	13	12	11	10	9	8	7	6	5	4	3	2	1	0

0 = Input Not Activated
1 = Input Activated

Options	Reserved	Reserved	Reserved	Reserved	Reserved	Reserved	Reserved	Reserved	Reserved	Reserved	Input 5	Input 4	Input 3	Input 2	Input 1	Input 0
Default	0	0	0	0	0	0	0	0	0	0	1	1	1	1	1	1
Bit	15	14	13	12	11	10	9	8	7	6	5	4	3	2	1	0

0 = Input Not Filtered
1 = Input Filtered

File	Group	No.	Display Name Full Name Description	Values	Read-Write	Data Type
22-Series I/O	Digital Outputs	5	**Dig Out Sts** Digital Output Status Status of the digital outputs.		RO	16-bit Integer

Options	Reserved	Reserved	Reserved	Reserved	Reserved	Reserved	Reserved	Reserved	Reserved	Reserved	Reserved	Reserved	Reserved	Trans Out 1 (2)	Trans Out 0 (1)	Relay Out 0
Default	0	0	0	0	0	0	0	0	0	0	0	0	0	0	0	0
Bit	15	14	13	12	11	10	9	8	7	6	5	4	3	2	1	0

0 = Output De-energized
1 = Output Energized

(1) Bit 1 = "Trans Out 0" for 22-Series I/O Module model 20-750-2263C-1R2T
= "Relay Out 1" for 22-Series I/O Module models 20-750-2262C-2R and 20-750-2262D-2R
(2) Bit 2 is only used by 22-Series I/O Module 20-750-2263C-1R2T

File	Group	No.	Display Name Full Name Description	Values		Read-Write	Data Type
22-Series I/O	Digital Outputs	6	**Dig Out Invert** Digital Output Invert Inverts the selected digital output.			RW	16-bit Integer

Options	Reserved	Reserved	Reserved	Reserved	Reserved	Reserved	Reserved	Reserved	Reserved	Reserved	Reserved	Reserved	Reserved	Trans Out 1(2)	Trans Out 0(1)	Relay Out 0
Default	0	0	0	0	0	0	0	0	0	0	0	0	0	0	0	0
Bit	15	14	13	12	11	10	9	8	7	6	5	4	3	2	1	0

0 = Output Not Inverted
1 = Output Inverted

(1) Bit 1 = "Trans Out 0" for 22-Series I/O Module model 20-750-2263C-1R2T
= "Relay Out 1" for 22-Series I/O Module models 20-750-2262C-2R and 20-750-2262D-2R
(2) Bit 2 is only used by 22-Series I/O Module 20-750-2263C-1R2T

	7	**Dig Out Setpoint** Digital Output Setpoint Controls Relay or Transistor Outputs when chosen as the source. Can be used to control outputs from a communication device using DataLinks.			RW	16-bit Integer

Options	Reserved	Reserved	Reserved	Reserved	Reserved	Reserved	Reserved	Reserved	Reserved	Reserved	Reserved	Reserved	Reserved	Trans Out 1(2)	Trans Out 0(1)	Relay Out 0
Default	0	0	0	0	0	0	0	0	0	0	0	0	0	0	0	0
Bit	15	14	13	12	11	10	9	8	7	6	5	4	3	2	1	0

0 = Output De-energized
1 = Output Energized

(1) Bit 1 = "Trans Out 0" for 22-Series I/O Module model 20-750-2263C-1R2T
= "Relay Out 1" for 22-Series I/O Module models 20-750-2262C-2R and 20-750-2262D-2R
(2) Bit 2 is only used by 22-Series I/O Module 20-750-2263C-1R2T

	10	**RO0 Sel** Relay Output 0 Select Selects the source that will energize the relay output. Any status parameter bit can be used as an output source. For example P935 [Drive Status 1] Bit 7 "Faulted." For Torque Proving set to Port 0, parameter 1103 Bit 4. Use N.O. for safety.	Default: Min/Max:	0.00 (Disabled) 0.00 / 159999.15	RW	32-bit Integer
	11	**RO0 Level Sel** Relay Output 0 Level Select Selects the source of the level that will be compared.	Default: Min/Max:	0 (Disabled) 0 / 159999	RW	32-bit Integer
	12	**RO0 Level** Relay Output 0 Level Sets the level compare value.	Default: Min/Max:	0.0 –/+1000000.0	RW	Real
	13	**RO0 Level CmpSts** Relay Output 0 Level Compare Status Status of the level compare, and a possible source for a relay or transistor output. Relay Output *n* Select or Transistor Output *n* Select must have this selected to energize the output. Can be used without a physical output as status information only.			RO	16-bit Integer

Options	Reserved	Reserved	Reserved	Reserved	Reserved	Reserved	Reserved	Reserved	Reserved	Reserved	Reserved	Reserved	AbsGrtThanEq	Abs Less Than	Grt Than Equ	Less Than
Default	0	0	0	0	0	0	0	0	0	0	0	0	0	0	0	0
Bit	15	14	13	12	11	10	9	8	7	6	5	4	3	2	1	0

0 = Condition False
1 = Condition True

Bit 0 "Less Than" – Level source is less than the level value.
Bit 1 "Grt Than Equ" – Level source is greater than or equal to the level value.
Bit 2 "Abs Less Than" – Absolute value of the level source is less than the absolute value of the level value.
Bit 3 "AbsGrtThanEq" – Absolute value of the level source is greater than or equal to the absolute value of the level value.

File	Group	No.	Display Name Full Name Description	Values		Read-Write	Data Type
22-Series I/O	Digital Outputs	14	**RO0 On Time** Relay Output 0 On Time Sets the "ON Delay" time for the digital outputs. This is the time between the occurrence of a condition and activation of the relay.	Units: Default: Min/Max:	Secs 0.0 0.0 / 600.0	RW	Real
		15	**RO0 Off Time** Relay Output 0 Off Time Sets the "OFF Delay" time for the digital outputs. This is the time between the disappearance of a condition and de-activation of the relay.	Units: Default: Min/Max:	Secs 0.0 0.0 / 600.0	RW	Real
		20	**RO1 Sel** Relay Output 1 Select – 22-Series I/O Module model 20-750-2262C-2R or 20-750-2262D-2R is installed. **TO0 Sel** Transistor Output 0 Select – 22-Series I/O Module model 20-750-2263C-1R2T is installed. Selects the source that will energize the relay or transistor output. Any status parameter bit can be used as an output source. For example P935 [Drive Status 1] Bit 7 "Faulted."	Default: Min/Max:	0.00 (Disabled) 0.00 / 159999.15	RW	32-bit Integer
		21	**RO1 Level Sel** Relay Output 1 Level Select – 22-Series I/O Module model 20-750-2262C-2R or 20-750-2262D-2R is installed. **TO0 Level Sel** Transistor Output 0 Level Select – 22-Series I/O Module model 20-750-2263C-1R2T is installed. Selects the source of the level that will be compared.	Default: Min/Max:	0 (Disabled) 0 / 159999	RW	32-bit Integer
		22	**RO1 Level** Relay Output 1 Level – 22-Series I/O Module model 20-750-2262C-2R or 20-750-2262D-2R is installed. **TO0 Level** Transistor Output 0 Level – 22-Series I/O Module model 20-750-2263C-1R2T is installed. Sets the level compare value.	Default: Min/Max:	0.0 –/+1000000.0	RW	Real
		23	**RO1 Level CmpSts** Relay Output 1 Level Compare Status – 22-Series I/O Module model 20-750-2262C-2R or 20-750-2262D-2R is installed. **TO0 Level CmpSts** Transistor Output 0 Level Compare Status – 22-Series I/O Module model 20-750-2263C-1R2T is installed. Status of the level compare, and a possible source for a relay or transistor output. Relay Output *n* Select or Transistor Output *n* Select must have this selected to energize the output. Can be used without a physical output as status information only. Bit 0 "Less Than" – Level source is less than the level value. Bit 1 "Grt Than Equ" – Level source is greater than or equal to the level value. Bit 2 "Abs Less Than" – Absolute value of the level source is less than the absolute value of the level value. Bit 3 "AbsGrtThanEq" – Absolute value of the level source is greater than or equal to the absolute value of the level value.			RO	16-bit Integer
		24	**RO1 On Time** Relay Output 1 On Time – 22-Series I/O Module model 20-750-2262C-2R or 20-750-2262D-2R is installed. **TO0 On Time** Transistor Output 0 On Time – 22-Series I/O Module model 20-750-2263C-1R2T is installed. Sets the "ON Delay" time for the digital outputs. This is the time between the occurrence of a condition and activation of the relay or transistor.	Units: Default: Min/Max:	Secs 0.0 0.0 / 600.0	RW	Real

Options	Reserved	Reserved	Reserved	Reserved	Reserved	Reserved	Reserved	Reserved	Reserved	Reserved	Reserved	Reserved	AbsGrtThanEq	Abs Less Than	Grt Than Equ	Less Than
Default	0	0	0	0	0	0	0	0	0	0	0	0	0	0	0	0
Bit	15	14	13	12	11	10	9	8	7	6	5	4	3	2	1	0

0 = Condition False
1 = Condition True

File	Group	No.	Display Name Full Name Description	Values		Read-Write	Data Type
22-Series I/O	Digital Outputs	25	**RO1 Off Time** Relay Output 1 Off Time – 22-Series I/O Module model 20-750-2262C-2R or 20-750-2262D-2R is installed. **TO0 Off Time** Transistor Output 0 Off Time – 22-Series I/O Module model 20-750-2263C-1R2T is installed. Sets the "OFF Delay" time for the digital outputs. This is the time between the disappearance of a condition and de-activation of the relay or transistor.	Units: Default: Min/Max:	Secs 0.0 0.0 / 600.0	RW	Real
		30	**TO1 Sel** Transistor Output 1 Select Selects the source that will energize the transistor output. Any status parameter bit can be used as an output source. For example P935 [Drive Status 1] Bit 7 "Faulted." **Important:** Only used by 22-Series I/O Module model 20-750-2263C-1R2T.	Default: Min/Max:	0 (Disabled) 0 / 159999.15	RW	32-bit Integer
		31	**TO1 Level Sel** Transistor Output 1 Level Select Selects the source of the level that will be compared. **Important:** Only used by 22-Series I/O Module model 20-750-2263C-1R2T.	Default: Min/Max:	0 (Disabled) 0 / 159999.15	RW	32-bit Integer
		32	**TO1 Level** Transistor Output 1 Level Sets the level compare value. **Important:** Only used by 22-Series I/O Module model 20-750-2263C-1R2T.	Default: Min/Max:	0.0 –/+1000000.0	RW	Real
		33	**TO1 Level CmpSts** Transistor Output 1 Level Compare Status Status of the level compare, and a possible source for a transistor output. Transistor Output *n* Select must have this selected to energize the output. Can be used without a physical output as status information only. Options: Reserved, Reserved, Reserved, Reserved, Reserved, Reserved, Reserved, Reserved, Reserved, Reserved, Reserved, Reserved, AbsGrtThanEq, Abs Less Than, Grt Than Equ, Less Than Default: 0 0 0 0 0 0 0 0 0 0 0 0 0 0 0 0 Bit: 15 14 13 12 11 10 9 8 7 6 5 4 3 2 1 0 0 = Condition False 1 = Condition True Bit 0 "Less Than" – Level source is less than the level value. Bit 1 "Grt Than Equ" – Level source is greater than or equal to the level value. Bit 2 "Abs Less Than" – Absolute value of the level source is less than the absolute value of the level value. Bit 3 "AbsGrtThanEq" – Absolute value of the level source is greater than or equal to the absolute value of the level value. **Important:** Only used by 22-Series I/O Module model 20-750-2263C-1R2T.			RO	16-bit Integer
		34	**TO1 On Time** Transistor Output 1 On Time Sets the "ON Delay" time for the digital outputs. This is the time between the occurrence of a condition and activation of the transistor. **Important:** Only used by 22-Series I/O Module model 20-750-2263C-1R2T.	Units: Default: Min/Max:	Secs 0.0 0.0 / 600.0	RW	Real
		35	**TO1 Off Time** Transistor Output 1 Off Time Sets the "OFF Delay" time for the digital outputs. This is the time between the disappearance of a condition and de-activation of the transistor. **Important:** Only used by 22-Series I/O Module model 20-750-2263C-1R2T.	Units: Default: Min/Max:	Secs 0.0 0.0 / 600.0	RW	Real

File	Group	No.	Display Name Full Name Description	Values		Read-Write	Data Type
22-Series I/O	Motor PTC	40	**PTC Cfg** Positive Temperature Coefficient Configuration Sets the action that will be taken when the PTC is not Ok. "Ignore" (0) – No action is taken. "Alarm" (1) – Type 1 alarm indicated. "Flt Minor" (2) – Minor fault indicated. If running, drive continues to run. Enable with P950 [Minor Flt Cfg]. If not enabled, acts like a major fault. "FltCoastStop" (3) – Major fault indicated. Coast to Stop. "Flt RampStop" (4) – Major fault indicated. Ramp to Stop. "Flt CL Stop" (5) – Major fault indicated. Current Limit Stop.	Default: Options:	0 = "Ignore" 0 = "Ignore" 1 = "Alarm" 2 = "Flt Minor" 3 = "FltCoastStop" 4 = "Flt RampStop" 5 = "Flt CL Stop"	RW	32-bit Integer
		41	**PTC Sts** Positive Temperature Coefficient Status Status of the PTC.			RO	16-bit Integer

Options	Reserved	Reserved	Reserved	Reserved	Reserved	Reserved	Reserved	Reserved	Reserved	Reserved	Reserved	Reserved	Reserved	Over Temp	PTC Short	PTC Ok
Default	0	0	0	0	0	0	0	0	0	0	0	0	0	0	0	0
Bit	15	14	13	12	11	10	9	8	7	6	5	4	3	2	1	0

0 = Condition False
1 = Condition True

Bit 0 "PTC Ok" – PTC is OK
Bit 1 "PTC Short" – PTC is Shorted
Bit 2 "Over Temp" – PTC is indicating over temperature

22-Series I/O	Motor PTC	42	**PTC Raw Value** Positive Temperature Coefficient Raw Value Displays the value of the PTC.	Units: Default: Min/Max:	Volt 0 0 / 10	RO	Real

File	Group	No.	Display Name Full Name Description	Values	Read-Write	Data Type
22-Series I/O	Analog Inputs	45	**Anlg In Type** Analog Input Type Status of the analog input mode set by the option jumpers.		RO	16-bit Integer

Options	Reserved	Reserved	Reserved	Reserved	Reserved	Reserved	Reserved	Reserved	Reserved	Reserved	Reserved	Reserved	Reserved	Reserved	Analog 1	Analog 0
Default	0	0	0	0	0	0	0	0	0	0	0	0	0	0	0	0
Bit	15	14	13	12	11	10	9	8	7	6	5	4	3	2	1	0

0 = Voltage Mode
1 = Current Mode

22-Series I/O	Analog Inputs	46	**Anlg In Sqrt** Analog Input Square Root Enables/disables the square root function for each input.			RW	16-bit Integer

Options	Reserved	Reserved	Reserved	Reserved	Reserved	Reserved	Reserved	Reserved	Reserved	Reserved	Reserved	Reserved	Reserved	Reserved	Analog 1	Analog 0
Default	0	0	0	0	0	0	0	0	0	0	0	0	0	0	0	0
Bit	15	14	13	12	11	10	9	8	7	6	5	4	3	2	1	0

0 = Square Root Disabled
1 = Square Root Enabled

File	Group	No.	Display Name Full Name Description	Values		Read-Write	Data Type
22-Series I/O	Analog Inputs	47	**AnIg In Loss Sts** Analog Input Loss Status Status of the analog input loss. Options: Reserved, Reserved, Reserved, Reserved, Reserved, Reserved, Reserved, Reserved, Reserved, Reserved, Reserved, Reserved, Reserved, Loss 1, Loss 0, Loss Default: 0 0 0 0 0 0 0 0 0 0 0 0 0 0 0 0 Bit: 15 14 13 12 11 10 9 8 7 6 5 4 3 2 1 0 0 = No Loss 1 = Loss Detected Bit 0 "Loss" – Indicates loss of one or both inputs.			RO	16-bit Integer
		50	**AnIg In0 Value** Analog Input 0 Value Value of the Analog input after filter, square root, and loss action.	Units: Default: Min/Max:	Volt mA 0.000 Volts 0.000 mA –/+10.000 Volts 0.000 / 20.000 mA	RO	Real
		51	**AnIg In0 Hi** Analog Input 0 High Sets the highest input value to the analog input scaling block.	Units: Default: Min/Max:	Volt mA 0.000 Volts 0.000 mA –/+10.000 Volts 0.000 / 20.000 mA	RW	Real
		52	**AnIg In0 Lo** Analog Input 0 Low Sets the lowest input value to the analog input scaling block.	Units: Default: Min/Max:	Volt mA 0.000 Volts 0.000 mA –/+10.000 Volts 0.000 / 20.000 mA	RW	Real
		53	**AnIg In0 LssActn** Analog Input 0 Loss Action Selects drive action when an analog signal loss is detected. Signal loss is defined as an analog signal less than 1V or 2mA. The signal loss event ends and normal operation resumes when the input signal level is greater than or equal to 1.5V or 3mA. "Ignore" (0) – No action is taken. "Alarm" (1) – Type 1 alarm indicated. "Flt Minor" (2) – Minor fault indicated. If running, drive continues to run. Enable with P950 [Minor Flt Cfg]. If not enabled, acts like a major fault. "FltCoastStop" (3) – Major fault indicated. Coast to Stop. "Flt RampStop" (4) – Major fault indicated. Ramp to Stop. "Flt CL Stop" (5) – Major fault indicated. Current Limit Stop. "Hold Input" (6) – Holds input at last value. "Set Input Lo" (7) – Sets input to P52 [AnIg In0 Lo]. "Set Input Hi" (8) – Sets input to P51 [AnIg In0 Hi].	Default: Options:	0 = "Ignore" 0 = "Ignore" 1 = "Alarm" 2 = "Flt Minor" 3 = "FltCoastStop" 4 = "Flt RampStop" 5 = "Flt CL Stop" 6 = "Hold Input" 7 = "Set Input Lo" 8 = "Set Input Hi"	RW	32-bit Integer
		54	**AnIg In0 Raw Val** Analog Input 0 Raw Value Raw Value of the analog input.	Units: Default: Min/Max:	Volt mA 0.000 Volts 0.000 mA –/+10.000 Volts 0.000 / 20.000 mA	RO	Real
		55	**AnIg In0 Filt Gn** Analog Input 0 Filter Gain Sets the analog input filter gain.	Default: Min/Max:	1.00 –/+5.00	RW	Real

File	Group	No.	Display Name Full Name Description	Values		Read-Write	Data Type
22-Series I/O	Analog Inputs	56	**Anlg In0 Filt BW** Analog Input 0 Filter Bandwidth Sets the analog input filter bandwidth.	Default: Min/Max:	0.0 0.0 / 500.0	RW	Real
		60	**Anlg In1 Value** Analog Input 1 Value Value of the Analog input after filter, square root, and loss action.	Units: Default: Min/Max:	Volt mA 0.000 Volts 0.000 mA –/+10.000 Volts 0.000 / 20.000 mA	RO	Real
		61	**Anlg In1 Hi** Analog Input 1 High Sets the highest input value to the analog input scaling block.	Units: Default: Min/Max:	Volt mA 10.000 Volts 20.000 mA –/+10.000 Volts 0.000 / 20.000 mA	RW	Real
		62	**Anlg In1 Lo** Analog Input 1 Low Sets the lowest input value to the analog input scaling block.	Units: Default: Min/Max:	Volt mA 0.000 Volts 0.000 mA –/+10.000 Volts 0.000 / 20.000 mA	RW	Real
		63	**Anlg In1 LssActn** Analog Input 1 Loss Action Selects drive action when an analog signal loss is detected. Signal loss is defined as an analog signal less than 1V or 2mA. The signal loss event ends and normal operation resumes when the input signal level is greater than or equal to 1.5V or 3mA. "Ignore" (0) – No action is taken. "Alarm" (1) – Type 1 alarm indicated. "Flt Minor" (2) – Minor fault indicated. If running, drive continues to run. Enable with P950 [Minor Flt Cfg]. If not enabled, acts like a major fault. "FltCoastStop" (3) – Major fault indicated. Coast to Stop. "Flt RampStop" (4) – Major fault indicated. Ramp to Stop. "Flt CL Stop" (5) – Major fault indicated. Current Limit Stop. "Hold Input" (6) – Holds input at last value. "Set Input Lo" (7) – Sets input to P62 [Anlg In1 Lo]. "Set Input Hi" (8) – Sets input to P61 [Anlg In1 Hi].	Default: Options:	0 = "Ignore" 0 = "Ignore" 1 = "Alarm" 2 = "Flt Minor" 3 = "FltCoastStop" 4 = "Flt RampStop" 5 = "Flt CL Stop" 6 = "Hold Input" 7 = "Set Input Lo" 8 = "Set Input Hi"	RW	32-bit Integer
		64	**Anlg In1 Raw Val** Analog Input 1 Raw Value Raw Value of the analog input.	Units: Default: Min/Max:	Volt mA 0.000 Volts 0.000 mA –/+10.000 Volts 0.000 / 20.000 mA	RO	Real
		65	**Anlg In1 Filt Gn** Analog Input 1 Filter Gain Sets the analog input filter gain.	Default: Min/Max:	1.00 –/+5.00	RW	Real
		66	**Anlg In1 Filt BW** Analog Input 1 Filter Bandwidth Sets the analog input filter bandwidth.	Default: Min/Max:	0.0 0.0 / 500.0	RW	Real

File	Group	No.	Display Name Full Name Description	Values		Read-Write	Data Type
22-Series I/O	Analog Outputs	70	**Anlg Out Type** Analog Output Type Select the analog output mode for each analog output. Options: Reserved (14), Analog 1, Analog 0 Default: 0 0 0 0 0 0 0 0 0 0 0 0 0 0 0 0 Bit: 15 14 13 12 11 10 9 8 7 6 5 4 3 2 1 0 0 = Voltage Mode 1 = Current Mode			RW	16-bit Integer
		71	**Anlg Out Abs** Analog Output Absolute Selects whether the signed value or absolute value of a parameter is used before being scaled to drive the analog output. Options: Reserved (14), Analog 1, Analog 0 Default: 0 0 0 0 0 0 0 0 0 0 0 0 0 0 1 1 Bit: 15 14 13 12 11 10 9 8 7 6 5 4 3 2 1 0 0 = Condition False 1 = Condition True			RW	16-bit Integer
		75	**Anlg Out0 Sel** Analog Output 0 Select Selects the source for the analog output.	Default: Min/Max:	3 0 / 159999	RW	32-bit Integer
		76	**Anlg Out0 Stpt** Analog Output 0 Setpoint A possible source for an analog output. Can be used to control an analog output from a communication device using a DataLink. Not affected by analog output scaling.	Units: Default: Min/Max:	Volt mA 10.000 Volts 20.000 mA –/+10.000 Volts 0.000 / 20.000 mA	RW	Real
		77	**Anlg Out0 Data** Analog Output 0 Data Displays the value of the source selected by P75 [Anlg Out0 Sel].	Default: Min/Max:	0 –/+40000.000	RO	Real
		78	**Anlg Out0 DataHi** Analog Output 0 Data High Sets the high value for the data range of analog out scale.	Units: Default: Min/Max:	pu 1 –/+40000.000	RW	Real
		79	**Anlg Out0 DataLo** Analog Output 0 Data Low Sets the low value for the data range of analog out scale.	Default: Min/Max:	1 –/+40000.000	RW	Real
		80	**Anlg Out0 Hi** Analog Output 0 High Sets the high value for the analog output value when the data value is at its maximum.	Units: Default: Min/Max:	Volt mA 10.000 Volts 20.000 mA –/+10.000 Volts 0.000 / 20.000 mA	RW	Real
		81	**Anlg Out0 Lo** Analog Output 0 Low Sets the low value for the analog output value when the data value is at its minimum.	Units: Default: Min/Max:	Volt mA 0.000 Volts 0.000 mA –/+10.000 Volts 0.000 / 20.000 mA	RW	Real

File	Group	No.	Display Name Full Name Description	Values		Read-Write	Data Type
22-Series I/O	Analog Outputs	82	**Anlg Out0 Val** Analog Output 0 Value Displays the analog output value.	Units: Default: Min/Max:	Volt mA 10.000 Volts 20.000 mA –/+10.000 Volts 0.000 / 20.000 mA	RO	Real
		85	**Anlg Out1 Sel** Analog Output 1 Select Selects the source for the analog output.	Default: Min/Max:	7 0 / 159999	RW	32-bit Integer
		86	**Anlg Out1 Stpt** Analog Output 1 Setpoint A possible source for an analog output. Can be used to control an analog output from a communication device using a DataLink. Not affected by analog output scaling.	Units: Default: Min/Max:	Volt mA 0.000 Volts 0.000 mA –/+10.000 Volts 0.000 / 20.000 mA	RW	Real
		87	**Anlg Out1 Data** Analog Output 1 Data Displays the value of the source selected by P85 [Anlg Out1 Sel].	Default: Min/Max:	0.000 0.000 / 4140.00	RO	Real
		88	**Anlg Out1 DataHi** Analog Output 1 Data High Sets the high value for the data range of analog out scale.	Default: Min/Max:	1.000 0.000 / 4140.00	RW	Real
		89	**Anlg Out1 DataLo** Analog Output 1 Data Low Sets the low value for the data range of analog out scale.	Default: Min/Max:	0.000 0.000 / 4140.00	RW	Real
		90	**Anlg Out1 Hi** Analog Output 1 High Sets the high value for the analog output value when the data value is at its maximum.	Units: Default: Min/Max:	Volt mA 10.000 Volts 20.000 mA –/+10.000 Volts 0.000 / 20.000 mA	RW	Real
		91	**Anlg Out1 Lo** Analog Output 1 Low Sets the low value for the analog output value when the data value is at its minimum.	Units: Default: Min/Max:	Volt mA 0.000 Volts 0.000 mA –/+10.000 Volts 0.000 / 20.000 mA	RW	Real
		92	**Anlg Out1 Val** Analog Output 1 Value Displays the analog output value.	Units: Default: Min/Max:	Volt mA 0.000 Volts 0.000 mA –/+10.000 Volts 0.000 / 20.000 mA	RO	Real

File	Group	No.	Display Name Full Name Description	Values		Read-Write	Data Type
22-Series I/O	Predictive Main	99	**PredMaint Sts** Predictive Maintenance Status Status of relay's predictive maintenance.			RO	16-bit Integer

Options	Master	Reserved	Reserved	Reserved	Reserved	Reserved	Reserved	Reserved	Reserved	Reserved	Reserved	Reserved	Reserved	Reserved	Relay Out 0 (1)	Relay Out 0
Default	0	0	0	0	0	0	0	0	0	0	0	0	0	0	0	0
Bit	15	14	13	12	11	10	9	8	7	6	5	4	3	2	1	0

0 = Condition False
1 = Condition True

(1) Bit 1= "Relay Out 0" for 22-Series I/O Module models 20-750-2262C-2R and 20-750-2262D-2R

100	**RO0 Load Type** Relay Output 0 Load Type Sets the type of load that will be applied to the relay. Must be properly set for the Predictive Maintenance function to predict the relay life.	Default: Options:	1 = "DC Inductive" 0 = "DC Resistive" 1 = "DC Inductive" 2 = "AC Resistive" 3 = "AC Inductive"	RW	32-bit Integer
101	**RO0 Load Amps** Relay Output 0 Load Amps Load current that will be applied to the relay contacts. Must be properly set for the Predictive Maintenance function to approximate the relay life.	Units: Default: Min/Max:	Amps 2.000 0.000 / 2.000	RW	Real
102	**RO0 TotalLife** Relay Output 0 Total Life Total life cycles of the relay based on programmed load type and amps.	Units: Default: Min/Max:	Cycl 0 0 / 2147483647	RO	32-bit Integer
103	**RO0 ElapsedLife** Relay Output 0 Elapsed Life Non-resettable, total accumulated cycles of the relay.	Units: Default: Min/Max:	Cycl 0 0 / 2147483647	RO	32-bit Integer
104	**RO0 RemainLife** Relay Output 0 Remaining Life The difference between the Total Life and the Elapsed Life.	Units: Default: Min/Max:	Cycl 0 –/+2147483647	RO	32-bit Integer
105	**RO0 LifeEvntLvl** Relay Output 0 Life Event Level Sets the percentage of relay life cycles before action is taken.	Units: Default: Min/Max:	% 80.000 0.000 / 100.000	RW	Real
106	**RO0 LifeEvntActn** Relay Output 0 Life Event Action Sets the action that will be taken when the percentage of relay life cycles has been reached. "Ignore" (0) – No action is taken. "Alarm" (1) – Type 1 alarm indicated. "Flt Minor" (2) – Minor fault indicated. If running, drive continues to run. Enable with P950 [Minor Flt Cfg]. If not enabled, acts like a major fault. "FltCoastStop" (3) – Major fault indicated. Coast to Stop. "Flt RampStop" (4) – Major fault indicated. Ramp to Stop. "Flt CL Stop" (5) – Major fault indicated. Current Limit Stop.	Default: Options:	1 = "Alarm" 0 = "Ignore" 1 = "Alarm" 2 = "Flt Minor" 3 = "FltCoastStop" 4 = "Flt RampStop" 5 = "Flt CL Stop"	RW	32-bit Integer

File	Group	No.	Display Name Full Name Description	Values		Read-Write	Data Type
22-Series I/O	Predictive Main	110	**RO1 Load Type** Relay Output 1 Load Type Sets the type of load that will be applied to the relay. Must be properly set for the Predictive Maintenance function to predict the relay life. **Important:** Only used by 22-Series I/O Module models 20-750-2262C-2R and 20-750-2262D-2R.	Default: Options:	1 = "DC Inductive" 0 = "DC Resistive" 1 = "DC Inductive" 2 = "AC Resistive" 3 = "AC Inductive"	RW	32-bit Integer
		111	**RO1 Load Amps** Relay Output 1 Load Amps Load current that will be applied to the relay contacts. Must be properly set for the Predictive Maintenance function to approximate the relay life. **Important:** Only used by 22-Series I/O Module models 20-750-2262C-2R and 20-750-2262D-2R.	Units: Default: Min/Max:	Amps 2.000 0.000 / 2.000	RW	Real
		112	**RO1 TotalLife** Relay Output 1 Total Life Total life cycles of the relay based on programmed load type and amps. **Important:** Only used by 22-Series I/O Module models 20-750-2262C-2R and 20-750-2262D-2R.	Units: Default: Min/Max:	Cycl 0 0 / 2147483647	RO	32-bit Integer
		113	**RO1 ElapsedLife** Relay Output 1 Elapsed Life Non-resettable, total accumulated cycles of the relay. **Important:** Only used by 22-Series I/O Module models 20-750-2262C-2R and 20-750-2262D-2R.	Units: Default: Min/Max:	Cycl 0 0 / 2147483647	RO	32-bit Integer
		114	**RO1 RemainLife** Relay Output 1 Remaining Life The difference between the Total Life and the Elapsed Life. **Important:** Only used by 22-Series I/O Module models 20-750-2262C-2R and 20-750-2262D-2R.	Units: Default: Min/Max:	Cycl 0 –/+2147483647	RO	32-bit Integer
		115	**RO1 LifeEvntLvl** Relay Output 1 Life Event Level Sets the percentage of relay life cycles before action is taken. **Important:** Only used by 22-Series I/O Module models 20-750-2262C-2R and 20-750-2262D-2R.	Units: Default: Min/Max:	% 80.000 0.000 / 100.000	RW	Real
		116	**RO1 LifeEvntActn** Relay Output 1 Life Event Action Sets the action that will be taken when the percentage of relay life cycles has been reached. **Important:** Only used by 22-Series I/O Module models 20-750-2262C-2R and 20-750-2262D-2R. "Ignore" (0) – No action is taken. "Alarm" (1) – Type 1 alarm indicated. "Flt Minor" (2) – Minor fault indicated. If running, drive continues to run. Enable with P950 [Minor Flt Cfg]. If not enabled, acts like a major fault. "FltCoastStop" (3) – Major fault indicated. Coast to Stop. "Flt RampStop" (4) – Major fault indicated. Ramp to Stop. "Flt CL Stop" (5) – Major fault indicated. Current Limit Stop.	Default: Options:	1 = "Alarm" 0 = "Ignore" 1 = "Alarm" 2 = "Flt Minor" 3 = "FltCoastStop" 4 = "Flt RampStop" 5 = "Flt CL Stop"	RW	32-bit Integer

Single Incremental Encoder Module Parameters

File	Group	No.	Display Name Full Name Description	Values	Read-Write	Data Type
Single Incremental Encoder		1	**Encoder Cfg** Encoder Configure Configures the direction, speed calculation method, signal type and active encoder channels.		RW	16-bit Integer
		2	**Encoder PPR** Encoder Pulses Per Revolution Configures the encoder module for the Pulses Per Revolution (Encoder Lines) of the incremental encoder.	Default: 1024 Min/Max: 2 / 20000	RW	Real
		3	**Fdbk Loss Cfg** Feedback Loss Configure Configures how the drive reacts to an error status condition for the feedback. "Ignore" (0) – No action is taken. "Alarm" (1) – Type 1 alarm indicated. "Flt Minor" (2) – Minor fault indicated. If running, drive continues to run. Enable with P950 [Minor Flt Cfg]. If not enabled, acts like a major fault. "FltCoastStop" (3) – Major fault indicated. Coast to Stop.	Default: 3 = "FltCoastStop" Options: 0 = "Ignore" 1 = "Alarm" 2 = "Flt Minor" 3 = "FltCoastStop"	RW	Real
		4	**Encoder Feedback** Encoder Feedback Displays the position feedback value of the encoder. This can be used as a source for the main control (Port 0) Feedback Select.	Default: 0 Min/Max: –/+2147483647	RO	Real

Options

	Reserved	Reserved	Reserved	Reserved	Reserved	Reserved	Reserved	Reserved	Reserved	Reserved	Direction	Single Ended	Inv Home In	Edge Mode	A Chan Only	Z Chan Enbl
Default	0	0	0	0	0	0	0	0	0	0	0	0	0	0	0	0
Bit	15	14	13	12	11	10	9	8	7	6	5	4	3	2	1	0

0 = Condition False
1 = Condition True

Bit 0 "Z Channel Enbl" – Configures the Channel Z to be used and monitored for Phase Loss. A value of 0 = the Z channel will be ignored. Must be set if the encoder marker pulse is used.

Bit 1 "A Chan Only" – Configures the module to use only the A channel, and ignore the B channel. In this mode, direction cannot be determined, and the position counter will always count up.

Bit 2 "Edge Mode" – Configure the module to use AB edge time data for speed calculation rather than accumulated count. Recommended for low speed operation.

Bit 3 "Inv Home In" – Configures the home input to be inverted. 1 = inverted, 0 = not inverted

Bit 4 "Single Ended" – Configure when the A Quad B encoder has single ended signals. In this mode, Phase Loss detection is disabled. 0 = Differential, 1 = Single Ended

Bit 5 "Direction" – Inverts the feedback count up/down associated with a given rotation direction internally. 1 = invert, 0 = do not invert This bit is changed by the direction test in the Start-Up routine when encoder direction is determined to be incorrect and "Change Logic" is selected when prompted.

File	Group	No.	Display Name Full Name Description	Values	Read-Write	Data Type
Single Incremental Encoder		5	**Encoder Status** Encoder Status Status information for the Incremental Encoder Module.		RO	16-bit Integer

Options	Direction	HomMrk Event	HomMrk Armed	HomeIn Event	HomeIn Armed	Home Input	Inv Home In	Marker Event	Z Not Input	Z Input	B Not Input	B Input	A Not Input	A Input	A Chan Only	Z Chan Enbl
Default	0	0	0	0	0	0	0	0	0	0	0	0	0	0	0	0
Bit	15	14	13	12	11	10	9	8	7	6	5	4	3	2	1	0

0 = Condition False
1 = Condition True

Bit 0 "Z Chan Enbl" – State of the corresponding bit in the [Encoder Cfg] parameter.
Bit 1 "A Chan Only" – State of the corresponding bit in the [Encoder Cfg] parameter.
Bit 2 "A Input" – State of encoder A input signal.
Bit 3 "A Not Input" – State of encoder A Not input signal.
Bit 4 "B Input" – State of encoder B input signal.
Bit 5 "B Not Input" – State of encoder B Not input signal.
Bit 6 "Z Input" – State of encoder Z input signal.
Bit 7 "Z Not Input" – State of encoder Z Not input signal.
Bit 8 "Marker Event" – When channel Z (marker pulse) is used, indicates that a marker pulse is detected. Automatically cleared in the homing routine or due to clearing of faults. This bit will remain on until cleared by either the homing function, spindle orient function or clear fault. For the Single and Dual Incremental encoder options, the marker input can only be used by the homing and spindle orient functions. Clearing the encoder faults will also clear the Marker Event status. The single and dual encoder cards use the same clear fault mechanism that is used to clear the drive faults.
Bit 9 "Inv Home In" – State of the corresponding bit in the [Encoder Cfg] parameter. When set, the home input signal will be inverted.
Bit 10 "Home Input" – Active state of the Home Input signal. This status bit gets inverted if the "Inv Home In" bit is enabled.
Bit 11 "HomeIn Armed" – Indicates that the homing logic is configured to latch the encoder position upon the next transition of the home input.
Bit 12 "HomeIn Event" – Indicates that the homing logic has latched the encoder position in response to a transition of the home input.
Bit 13 "HomMrk Armed" – Indicates that the homing logic is configured to latch the encoder position upon the next marker (Z channel) pulse.
Bit 14 "HomMrk Event" – Indicates that the homing logic has latched the encoder position in response to a marker (Z channel) pulse.
Bit 15 "Direction" – State of the corresponding bit in the [Encoder Cfg] parameter.

File	Group	No.	Display Name Full Name Description	Values	Read-Write	Data Type
Single Incremental Encoder		6	**Error Status** Error Status Status information that will result in a feedback loss condition.		RO	16-bit Integer

Options	SI Comm Loss	Reserved	Reserved	Reserved	Reserved	Reserved	Reserved	Reserved	Reserved	Reserved	Reserved	Reserved	Reserved	Quad Loss	Phase Loss	Open Wire
Default	0	0	0	0	0	0	0	0	0	0	0	0	0	0	0	0
Bit	15	14	13	12	11	10	9	8	7	6	5	4	3	2	1	0

0 = Condition False
1 = Condition True

Bit 0 "Open Wire" – Indicates that an input signal (A, B or Z) is in the same state as its complement (A Not, B Not, Z Not). For open wire detection to work, the encoder signals must be differential (not single ended). The Z channel is only checked when enabled. See P1 [Encoder Cfg].
Bit 1 "Phase Loss" – Indicates that more than 30 phase loss (open wire) events have occurred over an 8 msec time period. The same restrictions apply as on [Encoder Cfg] Bit 0. The Z channel will be ignored if not enabled. Checking for phase loss on the Z channel is only done when the Z channel is enabled.
Bit 2 "Quad Loss" – Quadrature loss events occur when simultaneous edge transitions occur on both the A and B encoder channels. Indicates that more than 10 quad loss events over a 8 msec time period are detected. Only valid when both A and B channels are used (not 'A Chan Only' in [Encoder Cfg]).
Bit 15 "SI Comm Loss" – Indicates a communication loss between the main control board and the encoder module over the Serial Interface backplane.

File	Group	No.	Display Name Full Name Description	Values		Read-Write	Data Type
Single Incremental Encoder		7	**Phase Loss Count** Phase Loss Count Displays the total number of encoder errors detected by the encoder card every 1 millisecond sample interval. These values are reset to zero every 1 millisecond. Diagnostic Items are available for the encoder that show the errors counted over 8 milliseconds as well as the peak error values. The peak values are reset when the drive faults are cleared.	Default: Min/Max:	0 0 / 127	RO	Real
		8	**Quad Loss Count** Displays the total number of encoder errors detected by the encoder card every 1 millisecond sample interval. These values are reset to zero every 1 millisecond. Diagnostic Items are available for the encoder that show the errors counted over 8 milliseconds as well as the peak error values. The peak values are reset when the drive faults are cleared.	Default: Min/Max:	0 0 / 15	RO	Real

Dual Incremental Encoder Module Parameters

File	Group	No.	Display Name Full Name Description	Values		Read-Write	Data Type
Dual Incremental Encoder	Encoder 0	1	**Enc 0 Cfg** Encoder 0 Configure Configures the position direction, speed calculation method, signal type and active encoder channels used for Encoder 0 (primary encoder).			RW	16-bit Integer

Options	Reserved	Reserved	Reserved	Reserved	Reserved	Reserved	Reserved	Reserved	Reserved	Reserved	Direction	Single Ended	Reserved	Edge Mode	A Chan Only	Z Chan Enbl
Default	0	0	0	0	0	0	0	0	0	0	0	0	0	0	0	0
Bit	15	14	13	12	11	10	9	8	7	6	5	4	3	2	1	0

0 = Condition False
1 = Condition True

Bit 0 "Z Channel Enbl" – Configures the Channel Z to be used and monitored for Phase Loss. A value of 0 = the Z channel will be ignored.

Bit 1 "A Chan Only" – Configures the module to use only the A channel, and ignore the B channel. In this mode, direction cannot be determined, and the position counter will always count up.

Bit 2 "Edge Mode" – Configure the module to use AB edge time data for speed calculation rather than accumulated count. Recommended for low speed operation.

Bit 4 "Single Ended" – Configure when the A Quad B encoder has single ended signals. In this mode, Phase Loss detection is disabled.
0 = Differential, 1 = Single Ended

Bit 5 "Direction" – Inverts the feedback count up/down associated with a given rotation direction internally. 1 = invert, 0 = do not invert

File	Group	No.	Display Name	Values		Read-Write	Data Type
Dual Incremental Encoder	Encoder 0	2	**Enc 0 PPR** Encoder 0 Pulses Per Revolution Configures the encoder module's primary input (Encoder 0) for the Pulses Per Revolution (Encoder Lines) of the A Quad B Encoder. When using a permanent magnet motor, the pulses per revolution (PPR) must be an exponent of two. For example: 512, 1024, 2048, 4096, 8192…524288…	Default: Min/Max:	1024 2 / 20000	RW	32-bit Integer
Dual Incremental Encoder	Encoder 0	3	**Enc 0 FB Lss Cfg** Encoder 0 Feedback Loss Configure Configures how the drive reacts to an error status condition for Encoder 0 (primary encoder). "Ignore" (0) – No action is taken. "Alarm" (1) – Type 1 alarm indicated. "Flt Minor" (2) – Minor fault indicated. If running, drive continues to run. Enable with P950 [Minor Flt Cfg]. If not enabled, acts like a major fault. "FltCoastStop" (3) – Major fault indicated. Coast to Stop.	Default: Options:	3 = "FltCoastStop" 0 = "Ignore" 1 = "Alarm" 2 = "Flt Minor" 3 = "FltCoastStop"	RW	32-bit Integer
Dual Incremental Encoder	Encoder 0	4	**Enc 0 FB** Encoder 0 Feedback Displays the position feedback value of Encoder 0 (primary encoder). This should be used as a source for the main control (Port 0) Feedback Select.	Default: Min/Max:	0 –/+2147483647	RO	32-bit Integer

File	Group	No.	Display Name Full Name Description	Values	Read-Write	Data Type
Dual Incremental Encoder	Encoder 0	5	**Enc 0 Sts** Encoder 0 Status Status information for Encoder 0.		RO	32-bit Integer

Options	Reserved	Reserved	Reserved	Reserved	Reserved	Reserved	Reserved	Reserved	Reserved	Reserved	Reserved	Reserved	Reserved	Reserved	Reserved	Reserved	Direction	HomMrk Event	HomMrk Armed	HomeIn Event	HomeIn Armed	Home Input	Inv Home In	Marker Event	Z Not Input	Z Input	B Not Input	B Input	A Not Input	A Input	A Chan Only	Z Chan Enbl
Default	0	0	0	0	0	0	0	0	0	0	0	0	0	0	0	0	0	0	0	0	0	0	0	0	0	0	0	0	0	0	0	0
Bit	31	30	29	28	27	26	25	24	23	22	21	20	19	18	17	16	15	14	13	12	11	10	9	8	7	6	5	4	3	2	1	0

Bit 0 "Z Chan Enbl" – State of the corresponding bit in the [Enc 0 Cfg] parameter.
Bit 1 "A Chan Only" – State of the corresponding bit in the [Enc 0 Cfg] parameter.
Bit 2 "A Input" – State of encoder A input signal.
Bit 3 "A Not Input" – State of encoder A Not input signal.
Bit 4 "B Input" – State of encoder B input signal.
Bit 5 "B Not Input" – State of encoder B Not input signal.
Bit 6 "Z Input" – State of encoder Z input signal.
Bit 7 "Z Not Input" – State of encoder Z Not input signal.
Bit 8 "Marker Event" – When channel Z (marker pulse) is used, indicates that a marker pulse is detected. Automatically cleared in the homing routine or due to clearing of encoder faults.
Bit 9 "Inv Home In" – State of the corresponding bit in the [Enc 0 Cfg] parameter. When set, the home input signal will be inverted.
Bit 10 "Home Input" – Active state of the Home Input signal. This status bit gets inverted if the "Inv Home In" bit is enabled.
Bit 11 "HomeIn Armed" – Indicates that the homing logic is configured to latch the encoder position upon the next transition of the home input.
Bit 12 "HomeIn Event" – Indicates that the homing logic has latched the encoder position in response to a transition of the home input.
Bit 13 "HomMrk Armed" – Indicates that the homing logic is configured to latch the encoder position upon the next marker (Z channel) pulse.
Bit 14 "HomMrk Event" – Indicates that the homing logic has latched the encoder position in response to a marker (Z channel) pulse.
Bit 15 "Direction" – State of the corresponding bit in the [Enc 0 Cfg] parameter.

		6	**Enc 0 Error Sts** Encoder 0 Error Status Status information that will result in a feedback loss condition for Encoder 0. Bit 0 "Open Wire" – Indicates that an input signal (A, B or Z) is in the same state as its complement (A Not, B Not, Z Not). For open wire detection to work, the encoder signals must be differential (not single ended). The Z channel is only checked when enabled.	RO	32-bit Integer

Options	Reserved	Reserved	Reserved	Reserved	Reserved	Reserved	Reserved	Reserved	Reserved	Reserved	Reserved	Reserved	Reserved	Reserved	Reserved	Reserved	SI Comm Loss	Reserved	Reserved	Reserved	Reserved	Reserved	Reserved	Reserved	Reserved	Reserved	Reserved	Reserved	Reserved	Quad Loss	Phase Loss	Open Wire
Default	0	0	0	0	0	0	0	0	0	0	0	0	0	0	0	0	0	0	0	0	0	0	0	0	0	0	0	0	0	0	0	0	0
Bit	31	30	29	28	27	26	25	24	23	22	21	20	19	18	17	16	15	14	13	12	11	10	9	8	7	6	5	4	3	2	1	0

Bit 1 "Phase Loss" – Indicates that more than 30 phase loss (open wire) events have occurred over an 8msec time period. The same restrictions apply as on [Enc 0 Cfg] Bit 0 "Z Chan Enbl."
Bit 2 "Quad Loss" – Quadrature loss events occur when simultaneous edge transitions occur on both the A and B encoder channels. Indicates that more than 10 quad loss events over a 10 msec time period are detected. Only valid when both A and B channels are used (not 'A Chan Only' in [Enc 0 Cfg]).
Bit 15 "SI Comm Loss" – Indicates a communication loss between the main control board and the encoder module over the Serial Interface backplane.

		7	**Enc 0 PhsLss Cnt** Encoder 0 Phase Loss Count Displays the active value of the encoder module's Encoder 0 phase loss counter hardware register. Values in this register accumulated over 8 msec are used to detect Phase Loss errors.	Default: Min/Max:	0 0 / 127	RO	32-bit Integer
		8	**Enc 0 QuadLssCnt** Encoder 0 Quad Loss Count Displays the active value of the encoder module's Encoder 0 quad loss counter hardware register. Values in this register accumulated over 8 msec are used to detect Quad Loss errors.	Default: Min/Max:	0 0 / 15	RO	32-bit Integer

File	Group	No.	Display Name Full Name Description	Values	Read-Write	Data Type
Dual Incremental Encoder	Encoder 1	11	**Enc 1 Cfg** Encoder 1 Configure Configures the position direction, speed calculation method, signal type and active encoder channels used for Encoder 1 (secondary encoder). Options: Reserved, Reserved, Reserved, Reserved, Reserved, Reserved, Reserved, Reserved, Reserved, Reserved, Direction, Single Ended, Reserved, Edge Mode, A Chan Only, Z Chan Enbl Default: 0 0 0 0 0 0 0 0 0 0 0 0 0 0 0 0 Bit: 15 14 13 12 11 10 9 8 7 6 5 4 3 2 1 0 0 = Condition False 1 = Condition True Bit 0 "Z Channel Enbl" – Configures the Channel Z to be used and monitored for Phase Loss. A value of 0 = the Z channel will be ignored. Bit 1 "A Chan Only" – Configures the module to use only the A channel, and ignore the B channel. In this mode, direction cannot be determined, and the position counter will always count up. Bit 2 "Edge Mode" – Configure the module to use AB edge time data for speed calculation rather than accumulated count. Recommended for low speed operation. Bit 4 "Single Ended" – Configure when the A Quad B encoder has single ended signals. In this mode, Phase Loss detection is disabled. 0 = Differential, 1 = Single Ended Bit 5 "Direction" – Inverts the position count up/down associated with a given rotation direction internally. 1 = invert, 0 = do not invert		RW	16-bit Integer
		12	**Enc 1 PPR** Encoder 1 Pulses Per Revolution Configures the encoder module's secondary input (Encoder 1) for the Pulses Per Revolution (Encoder Lines) of the A Quad B Encoder. When using a permanent magnet motor, the pulses per revolution (PPR) must be an exponent of two. For example: 512, 1024, 2048, 4096, 8192…524288…	Default: 1024 Min/Max: 2 / 20000	RW	32-bit Integer
		13	**Enc 1 FB Lss Cfg** Encoder 1 Feedback Loss Configures how the drive reacts to an error status condition for Encoder 1 (secondary encoder). "Ignore" (0) – No action is taken. "Alarm" (1) – Type 1 alarm indicated. "Flt Minor" (2) – Minor fault indicated. If running, drive continues to run. Enable with P950 [Minor Flt Cfg]. If not enabled, acts like a major fault. "FltCoastStop" (3) – Major fault indicated. Coast to Stop.	Default: 3 = "FltCoastStop" Min/Max: 0 = "Ignore" 1 = "Alarm" 2 = "Flt Minor" 3 = "FltCoastStop"	RW	32-bit Integer
		14	**Enc 1 FB** Encoder 1 Feedback Displays the position feedback value of Encoder 1 (secondary encoder). This should be used as a source for the main control (Port 0) Feedback Select.	Default: 0 Min/Max: –/+2147483647	RO	32-bit Integer

File	Group	No.	Display Name Full Name Description	Values	Read-Write	Data Type
Dual Incremental Encoder	Encoder 1	15	**Enc 1 Sts** Encoder 1 Status Status information for Encoder 1.		RW	32-bit Integer

Options	Reserved	Reserved	Reserved	Reserved	Reserved	Reserved	Reserved	Reserved	Reserved	Reserved	Reserved	Reserved	Reserved	Reserved	Reserved	Reserved	Direction	HomMrk Event	HomMrk Armed	HomeIn Event	HomeIn Armed	Home Input	Inv Home In	Marker Event	Z Not Input	Z Input	B Not Input	B Input	A Not Input	A Input	A Chan Only	Z Chan Enbl
Default	0	0	0	0	0	0	0	0	0	0	0	0	0	0	0	0	0	0	0	0	0	0	0	0	0	0	0	0	0	0	0	0
Bit	31	30	29	28	27	26	25	24	23	22	21	20	19	18	17	16	15	14	13	12	11	10	9	8	7	6	5	4	3	2	1	0

Bit 0 "Z Chan Enbl" – State of the corresponding bit in the [Enc 1 Cfg] parameter.
Bit 1 "A Chan Only" – State of the corresponding bit in the [Enc 1 Cfg] parameter.
Bit 2 "A Input" – State of encoder A input signal.
Bit 3 "A Not Input" – State of encoder A Not input signal.
Bit 4 "B Input" – State of encoder B input signal.
Bit 5 "B Not Input" – State of encoder B Not input signal.
Bit 6 "Z Input" – State of encoder Z input signal.
Bit 7 "Z Not Input" – State of encoder Z Not input signal.
Bit 8 "Marker Event" – When channel Z (marker pulse) is used, indicates that a marker pulse is detected. Automatically cleared in the homing routine or due to clearing of encoder faults.
Bit 9 "Inv Home In" – State of the corresponding bit in the [Enc 1 Cfg] parameter. When set, the home input signal will be inverted.
Bit 10 "Home Input" – Active state of the Home Input signal. This status bit gets inverted if the "Inv Home In" bit is enabled.
Bit 11 "HomeIn Armed" – Indicates that the homing logic is configured to latch the encoder position upon the next transition of the home input.
Bit 12 "HomeIn Event" – Indicates that the homing logic has latched the encoder position in response to a transition of the home input.
Bit 13 "HomMrk Armed" – Indicates that the homing logic is configured to latch the encoder position upon the next marker (Z channel) pulse.
Bit 14 "HomMrk Event" – Indicates that the homing logic has latched the encoder position in response to a marker (Z channel) pulse.
Bit 15 "Direction" – State of the corresponding bit in the [Enc 1 Cfg] parameter.

		16	**Enc 1 Error Sts** Encoder 1 Error Status Status information that will result in a feedback loss condition for Encoder 1.		RO	32-bit Integer

Options	Reserved	Reserved	Reserved	Reserved	Reserved	Reserved	Reserved	Reserved	Reserved	Reserved	Reserved	Reserved	Reserved	Reserved	Reserved	Reserved	SI Comm Loss	Reserved	Reserved	Reserved	Reserved	Reserved	Reserved	Reserved	Reserved	Reserved	Reserved	Reserved	Reserved	Quad Loss	Phase Loss	Open Wire
Default	0	0	0	0	0	0	0	0	0	0	0	0	0	0	0	0	0	0	0	0	0	0	0	0	0	0	0	0	0	0	0	0
Bit	31	30	29	28	27	26	25	24	23	22	21	20	19	18	17	16	15	14	13	12	11	10	9	8	7	6	5	4	3	2	1	0

Bit 0 "Open Wire" – Indicates that an input signal (A, B or Z) is in the same state as its complement (A Not, B Not, Z Not).
For open wire detection to work, the encoder signals must be differential (not single ended).
The Z channel is only checked when enabled.
Bit 1 "Phase Loss" – Indicates that more than 30 phase loss (open wire) events have occurred over an 8msec time period. The same restrictions apply as on [Enc 1 Cfg] Bit 0 "Z Chan Enbl."
Bit 2 "Quad Loss" – Quadrature loss events occur when simultaneous edge transitions occur on both the A and B encoder channels. Indicates that more than 10 quad loss events over a 10 msec time period are detected. Only valid when both A and B channels are used (not "A Chan Only" in [Enc 1 Cfg]).
Bit 15 "SI Comm Loss" – Indicates a communication loss between the main control board and the encoder module over the Serial Interface backplane.

		17	**Enc 1 PhsLss Cnt** Encoder 1 Phase Loss Count Displays the active value of the encoder module's Encoder 1 phase loss counter hardware register. Values in this register accumulated over 8 msec are used to detect Phase Loss errors.	Default: Min/Max:	0 0 / 127	RO	32-bit Integer
		18	**Enc 1 QuadLssCnt** Encoder 1 Quad Loss Count Displays the active value of the encoder module's Encoder 1 quad loss counter hardware register. Values in this register accumulated over 8 msec are used to detect Quad Loss errors.	Default: Min/Max:	0 0 / 15	RO	32-bit Integer

File	Group	No.	Display Name Full Name Description	Values	Read-Write	Data Type
Dual Incremental Encoder	Homing Cfg	20	**Homing Cfg** Homing Configure Configures options for the homing function. Common to both encoders.	0 = Not Inverted 1 = Inverted	RW	16-bit Integer

Options	Reserved	Reserved	Reserved	Reserved	Reserved	Reserved	Reserved	Reserved	Reserved	Reserved	Reserved	Reserved	Reserved	Reserved	Reserved	Inv Home In
Default	0	0	0	0	0	0	0	0	0	0	0	0	0	0	0	0
Bit	15	14	13	12	11	10	9	8	7	6	5	4	3	2	1	0

Bit 0 “Inv Home In” – Inverts the home input signal.

File	Group	No.	Display Name Full Name Description	Values	Read-Write	Data Type
Dual Incremental Encoder	Module Status	21	**Module Sts** Module Status Encoder module status information. Common to both encoders.	0 = Cleared 1 = Set	RO	16-bit Integer

Options	Reserved	Reserved	Reserved	Reserved	Reserved	Reserved	Reserved	Reserved	Reserved	Reserved	Reserved	Reserved	Reserved	Reserved	SafetyVoltHi	Safety Mode
Default	0	0	0	0	0	0	0	0	0	0	0	0	0	0	0	0
Bit	15	14	13	12	11	10	9	8	7	6	5	4	3	2	1	0

Bit 0 “Safety Mode” – Indicates that the dip switch on the dual encoder module is configured to place its feedback signals on the SI backplane for use by the Safe Speed Monitor module. If multiple dual encoder modules are present, only one dual encoder can be configured for Safety Mode. 0 = Safety Mode Off. 1 = Safety Mode On.

Bit 1 “SafetyVoltHi” – Indicates the status (configured by a jumper on the module) of the safety feedback voltage mode. 0 = 5V safety feedback mode, 1 = 12V safety feedback mode.

Universal Feedback Module Parameters

File	Group	No.	Display Name Full Name Description	Values	Read-Write	Data Type
Universal Feedback	Module	1	**Module Sts** Module Status Shows error and alarm information of the Feedback Option module.		RO	16-bit Integer

Options	DPI Ready	Sec Safety	Pri Safety	Reserved	Reserved	Reserved	Reserved	Reserved	Reserved	Reserved	Initializing	FB0FB1 Cflct	Reserved	Reserved	Safety Cflct	EncOut Cflct	Reserved	Reserved	Firmware Err	Hardware Err	Reserved	Cfg Alarm	FB1 Alarm	FB0 Alarm	Reserved	System Error	FB1 Error	FB0 Error	Reserved	Alarm Type 2	Alarm Type 1	Module Error
Default	0	0	0	0	0	0	0	0	0	0	0	0	0	0	0	0	0	0	0	0	0	0	0	0	0	0	0	0	0	0	0	0
Bit	31	30	29	28	27	26	25	24	23	22	21	20	19	18	17	16	15	14	13	12	11	10	9	8	7	6	5	4	3	2	1	0

0 = False
1 = True

Bit 0 “Module Error” – Indicates that the Feedback Option module has any error. This bit is set if at least one of the bits “FB0 Error”, “FB1 Error”, or “System Error” is set.

Bit 1 “Alarm Type 1” – Indicates that there is any alarm of type 1 active on the Feedback Option module. Bits 8…10 indicate what kind of alarm is active.

Bit 2 “Alarm Type 2” – Indicates that there is any alarm of type 2 active on the Feedback Option module. Bits 20 and 21 indicate what kind of alarm is active.

Bit 4 “FB0 Error” – Indicates that Feedback 0 has an error. This bit is set if any Feedback 0 error bit in P10 [FB0 Sts] is set. If this bit is set, Bit 0 “Module Error” is also set.

Bit 5 “FB1 Error” – Indicates that Feedback 1 has an error. This bit is set if any Feedback 1 error bit in P10 [FB1 Sts] is set. If this bit is set, Bit 0 “Module Error” is also set.

Bit 6 “System Error” – Indicates that there is a feedback independent error on the Feedback Option module. Bits 12 and 13 show the type of the System Error. If this bit is set, Bit 0 “Module Error” is also set.

Bit 8 “FB0 Alarm” – Indicates that feedback device 0 has an alarm. This bit is set if there is an alarm in the Feedback 0 encoder. If this bit is set, Bit 1 “Alarm Type 1” and P10 [FB0 Sts] Bit 12 “Encoder Alm” will also be set. The specific alarm condition may be shown in a status found under the diagnostics tab for the Universal Feedback Module. Separate diagnostic items are provided for both ports and for both of the following devices: EnDat and BiSS. Alarm conditions for Linear Stahl feedback devices can be found in P27 [FB0 LinStahl Sts] and P57 [FB1 LinStahl Sts].

Bit 9 “FB1 Alarm” – Indicates that feedback device 1 has an alarm. This bit is set if there is an alarm in the Feedback 1 encoder. If this bit is set, Bit 1 “Alarm Type 1” and P40 [FB1 Sts] Bit 12 “Encoder Alm” will also be set. The specific alarm condition may be shown in a status found under the diagnostics tab for the Universal Feedback Module. Separate diagnostic items are provided for both ports and for both of the following devices: EnDat and BiSS. Alarm conditions for Linear Stahl feedback devices can be found in P27 [FB0 LinStahl Sts] and P57 [FB1 LinStahl Sts].

Bit 10 “Cfg Alarm” – Indicates that there is a feedback independent alarm on the Feedback Option module. Bits 16 and 17 show the type of the Cfg Alarm. If this bit is set, Bit 1 “Alarm Type 1” is also set.

Bit 12 “Hardware Err” – Indicates that there is a Hardware Error on the Feedback Option module. If this bit is set, Bit 6 “System Error” is also set. The hardware is self tested by the board at powerup. Specific details of the hardware failure are not available.

Bit 13 “Firmware Err” – Indicates that there is a Firmware Error on the Feedback Option module. A Firmware Error occurs if the Hardware and the downloaded Firmware are not compatible. If this bit is set, Bit 6 “System Error” is also set.

Bit 16 “EncOut Cflct” – If set, there is one of the following problems with the Encoder Output:

- The selection in P80 [Enc Out Sel] is not possible since the required pins on the terminal blocks are already used for Feedback 0 or 1 according to P6 [FB0 Device Sel] and P36 [FB1 Device Sel].
- P80 [Enc Out Sel] is set to “Sine Cosine” and there is no signal connected to the pins 1-4 of the Terminal Block 1.
- P80 [Enc Out Sel] is set to “Sine Cosine”, the value of [FB*n* IncAndSC PPR] is not a power of two, and the parameter P84 [Enc Out Z PPR] is not set to 0 “1 ZPulse.” This is not allowed.
- P80 [Enc Out Sel] is set to “Channel X” or “Channel Y” and there is no encoder connected to that channel.
- P80 [Enc Out Sel] is set to “Channel X” or “Channel Y” and there is a linear encoder connected to this channel. If this bit is set, Bit 10 “Cfg Alarm” is also set.

Bit 17 “Safety Cflct” – If set, the Safety DIP switches are in an invalid position. If this bit is set, Bit 10 “Cfg Alarm” is also set.

Bit 20 “FB0FB1 Cflct” – If set, the combination of the feedback selection done with the parameters P6 [FB0 Device Sel] and P36 [FB1 Device Sel] is invalid, i.e. both feedbacks have Sin-Cos-Signals (There is only place for one set of Sin-Cos-Signals on the Terminal Blocks). If this bit is set, Bit 2 “Alarm Type 2” is also set.

Bit 21 “Initializing” – Indicates that the Universal Feedback State Machine is in the Initialize State. This Type 2 alarm makes sure that the motor cannot be started during the initialization state. If this bit is set, Bit 2 “Alarm Type 2” is also set.

Bit 29 “Pri Safety” – Indicates that the UFB is used as primary safety module.

Bit 30 “Sec Safety” – Indicates that the UFB is used as secondary safety module.

Bit 31 “DPI Ready” – This bit tells the MCB if the UFB is ready for DPI communication.

File	Group	No.	Display Name Full Name Description	Values		Read-Write	Data Type
Universal Feedback	Module	2	**Module Err Reset** Module Error Reset Selects the module reset type. The Universal Feedback module allows errors to be reset directly on the module. The drive's fault and alarm clear mechanisms will do this automatically and should normally be used instead of this parameter. In cases where the errors need to be reset directly, this parameter can be used. "Ready" (0) – This is the normal state for this parameter. All other states are temporary. This parameter will return to "Ready" once the requested reset operation is complete. "Clr FB Intlz" (1) – Requests the module to clear all errors and re-execute its initialization routines. Only possible when the drive is stopped. "Clear Errors" (2) – Requests the module to clear all errors without re-executing its initialization routines. Allowed if the drive is active. "FB Initlz" (3) – Requests the module to execute a software reset. Only possible when the drive is stopped.	Default: Options:	0 = "Ready" 0 = "Ready" 1 = "Clr FB Intlz" 2 = "Clear Errors" 3 = "FB Initlz"	RW	32-bit Integer

File	Group	No.	Display Name Full Name Description	Values		Read-Write	Data Type
Universal Feedback	Feedback 0	5	**FB0 Position** Feedback 0 Position Displays the position value from the feedback 0 device. For parameter 6 [FB0 Device Select] options 1, 2, 3, and 4, one revolution of the feedback = 1048576. For options 11, 12, and 13, typically one revolution of the feedback is 4 x Pulses Per Revolution.	Default: Min/Max:	0 –2147483648 / 2147483647	RO	32-bit Integer
		6	**FB0 Device Sel** Feedback 0 Device Select Specifies the encoder type for the feedback 0 device. In some cases, there is a choice of terminal blocks to use. Channel X refers to devices wired to TB1 and Channel Y refers to TB2. "None" (0) – No feedback device selected. Use this selection if the feedback device is unused. For example, only one feedback device is present and it is used on the other feedback. "EnDat SC" (1) – EnDat encoder with sine/cosine signals (Heidenhain). Terminal block 1. "Hiperface SC" (2) – Hiperface encoder with sine/cosine signals (Stegmann). Terminal block 1. The following Hiperface Type ID codes are supported: 02h, 07h, 22h, 27h, 23h, and 37h. Refer to manufacturer data sheet for more information. "BiSS SC" (3) – BiSS encoder with sine/cosine signals. Terminal block 1. "SSI SC" (4) – SSI encoder with sine/cosine signals. Terminal block 1. "EnDat FD ChX" (5) – Full digital EnDat encoder without sine/cosine signals (Heidenhain). Terminal block 1. "EnDat FD ChY" (6) – Full digital EnDat encoder without sine/cosine signals (Heidenhain). Terminal block 2. "BiSS FD ChX" (7) – Full digital BiSS encoder without sine/cosine signals. Terminal block 1. "BiSS FD ChY" (8) – Full digital BiSS encoder without sine/cosine signals. Terminal block 2. "SSI FD ChX" (9) – SSI Full Digital ChX "SSI FD ChY" (10) – SSI Full Digital ChY "SinCos Only" (11) – Generic sine/cosine encoder. Terminal block 1. "Inc A B Z" (12) – A Quad B encoder with Z marker. Terminal block 1, Pins 17…22. "Inc SC" (13) – A Quad B encoder without Z marker. Terminal block 1, Pins 1…4. "LinTempo ChX" (14) – Temposonic linear encoder. Terminal block 1. "LinTempo ChY" (15) – Temposonic linear encoder. Terminal block 2. "LinStahl ChX" (16) – Stahl linear encoder. Terminal block 1. "LinStahl ChY" (17) – Stahl linear encoder. Terminal block 2. "LinSSI ChX" (18) – Any linear encoder with an SSI interface. Terminal block 1. "LinSSI ChY" (19) – Any linear encoder with an SSI interface. Terminal block 2.	Default: Options:	0 = "None" 0 = "None" 1 = "EnDat SC" 2 = "Hiperface SC" 3 = "BiSS SC" 4 = "SSI SC" 5 = "EnDat FD ChX" 6 = "EnDat FD ChY" 7 = "BiSS FD ChX" 8 = "BiSS FD ChY" 9 = "Reserved" (See "SSI FD ChX") 10 = "Reserved" (See "SSI FD ChY") 11 = "SinCos Only" 12 = "Inc A B Z" 13 = "Inc SC" 14 = "LinTempo ChX" 15 = "LinTempo ChY" 16 = "LinStahl ChX" 17 = "LinStahl ChY" 18 = "LinSSI ChX" 19 = "LinSSI ChY"	RW	Real

File	Group	No.	Display Name Full Name Description	Values	Read-Write	Data Type
Universal Feedback	Feedback 0	7	**FB0 Identify** Feedback 0 Identify Displays the used encoder type for the feedback 0 device, e.g. Multi turn, rotary encoder with EnDat 2.1 interface including SIN/COS incremental signals.		RO	16-bit Integer

Options	Reserved	Stahl	Temposonic	SSI	BiSS	Hiperface	EnDat 2p2	EnDat 2p1	Incremental	Full Digital	Sin Cos	Enh Resol	Multi Turn	Single Turn	Linear	Rotary
Default	0	0	0	0	0	0	0	0	0	0	0	0	0	0	0	0
Bit	15	14	13	12	11	10	9	8	7	6	5	4	3	2	1	0

0 = Condition False
1 = Condition True

Bit 0 “Rotary” – Rotary encoder (incremental type).

Bit 1 “Linear” – Linear encoder (Temposonic and Stahl type).

Bit 2 “Single Turn” – Single turn absolute encoder. This encoder type can only track absolute position for one turn of the encoder shaft.

Bit 3 “Multi Turn” – Multiturn absolute encoder. This encoder type can track absolute position across multiple encoder turns.

Bit 4 “Enh Resol” – High resolution encoder. This bit is set if there are more than 24 bits resolution (full digital encoders) or the PPR is greater than or equal to 16384. If this bit is set, Bit 1 “24-bit Resol” in parameter [FB0 Cfg] should also be set.

Bit 5 “Sin Cos” – Sine / Cosine encoder, abbreviated SC. This encoder type makes use of an analog sine/cosine signal pair. This is the analog counterpart to the A quad B incremental encoder. A fine interpolation algorithm is sometimes used to provide high resolution feedback by processing the full sine/cosine cycle. Lower resolution feedback is also implemented by counting only zero crossings.

Bit 6 “Full Digital” – Full digital encoder, abbreviated FD. Refers to devices that use a serial communication interface, such as a clock and data lines to transmit data to/from the module. The analog (sine/cosine) signals are not used with a Full Digital interface.

Bit 7 “Incremental” – Typically an A quad B encoder, with optional Z (marker) channel. “A Channel Only” is possible (no B channel), but rarely used because this configuration lacks direction capability. Single channel incremental could be used to provide a speed (magnitude only) reference signal.

Bit 8 “EnDat 2p1” – Heidenhain absolute encoder with EnDat 2.1 command set support. EnDat is a proprietary protocol developed by Heidenhain. It is a synchronous, bidirectional serial interface. EnDat is a full digital interface.

Bit 9 “EnDat 2p2” – Heidenhain EnDat 2.2 command set support. This version supports incremental as well as absolute encoders.

Bit 10 “Hiperface” – Dedicated serial interface protocol for Stegmann devices. Hiperface is short for High Performance Interface. This interface makes use of both analog (sine/cosine) and digital (clock/data) signals.

Bit 11 “BiSS” – Bidirectional Synchronous Serial Interface. This is an open protocol and is hardware-compatible with SSI. Both mixed SC with digital and FD types are supported. Presently, only BiSS encoders from Hengstler GmbH are supported.

Bit 12 “SSI” – Synchronous Serial Interface. Only the mixed SC with digital version is supported. Rotary version is mixed analog/digital, linear version is full digital.

Bit 13 “Temposonic” – Linear position sensor from MTS Systems Corp. Full digital SSI interface, absolute device uses magnetostrictive technology.

Bit 14 “Stahl” – Linear position sensor from Stahl GmbH. Full digital SSI interface, absolute device uses an encoded rail.

File	Group	No.	Display Name Full Name Description	Values	Read-Write	Data Type
Universal Feedback	Feedback 0	8	**FB0 Cfg** Feedback 0 Configuration Configure the direction, position data format, as well as the baud rate for the serial communication interface for the feedback 0 device.		RW	16-bit Integer

Options	Reserved	Reserved	Reserved	Reserved	Reserved	Reserved	Reserved	Reserved	Reserved	Reserved	Reserved	Reserved	SC Quadrant	FD Low Baud	24-bit Resol	Direction
Default	0	0	0	0	0	0	0	0	0	0	0	0	0	0	0	0
Bit	15	14	13	12	11	10	9	8	7	6	5	4	3	2	1	0

0 = Condition False
1 = Condition True

Bit 0 "Direction" – Inverts the direction internally.

Bit 1 "24-bit Resol" – If set, the high resolution 32-Bit feedback position is formatted as 8/24 bit. The 8 refers to the upper 8 most significant bits or left most 8 bits. These 8 bits count the number of complete encoder shaft revolutions. The remaining lower right least significant 24 bits indicate the encoder position within a single turn of the encoder shaft. The 24-Bit resolution is only available when Bit 4 "Enh Resol" of the FB Identify parameter is set. If clear, the feedback position is formatted as 12/20 bit. The upper 12 bits count the number of complete encoder shaft revolutions. The lower 20 bits indicate the encoder position within a single turn. The 12/20 bit format is the default setting for high resolution feedback.

Bit 2 "FD Low Baud" – Full Digital Low Baud refers to the serial data interface between the encoder and Universal Feedback module. If set, the communication baud rate is reduced from the default setting for the connected encoder with a serial communication channel. The actual value of the lower baud setting will vary, depending upon the specific interface and device type in use. For feedback 0, UFB diagnostic item 8 will indicate the exact baud rate in use. For feedback 1, Universal Feedback diagnostic item 14 will indicate the baud rate. Diagnostic items can be found under "Device Properties" in the "Diagnostics" tab of DriveExplorer. The possible settings for diagnostic item 8 [Fdbk0 Baud Rate] and item 14 [Fdbk1 Baud Rate] are as follows:

0 = "None" - No digital communication.

1 = "9.6 kBaud" - 9.6 kBaud: Used for communication with Hiperface encoders.

2 = "100 kHz" - 100kHz: Used for communication with
- SSI encoders with sine cosine signals (only in Initialize state).
- Linear SSI encoders if the "Low BaudRate" in [Fdbk0 Pos Config] is set.

3 = "200 kHz" - 200kHz: Used for communication with
- EnDat encoders with sine cosine signals (only in Initialize state).
- BiSS encoders with sine cosine signals (only in Initialize state).
- Linear SSI encoders if the "Low BaudRate" in [Fdbk0 Pos Config] is cleared.

4 = "400 kHz" - Not used.

5 = "1 MHz" - 1MHz: Used for communication with
- SSI encoders if the "Low BaudRate" in [Fdbk0 Pos Config] is set.

6 = "2 MHz" - 2MHz: Used for communication with
- SSI encoders if the "Low BaudRate" in [Fdbk0 Pos Config] is cleared.
- EnDat2.1 encoders without sine cosine signals.
- EnDat2.2 encoders that do not manage 8MHz.

7 = "4 MHz" - 4MHz: Used for communication with
- EnDat2.2 encoders if the "Low BaudRate" in [Fdbk0 Pos Config] is set.

8 = "5 MHz" - 5MHz: Used for communication with
- BiSS encoders if the "Low BaudRate" in [Fdbk0 Pos Config] is set.

9 = "8 MHz" - 8MHz: Used for communication with
- EnDat2.2 encoders if the "Low BaudRate" in [Fdbk0 Pos Config] is cleared.

10 = "10 MHz" - 10MHz: Used for communication with
- BiSS encoders if the "Low BaudRate" in [Fdbk0 Pos Config] is cleared.

Bit 3 "SC Quadrant" – Reserved for future use.

File	Group	No.	Display Name Full Name Description	Values		Read-Write	Data Type
Universal Feedback	Feedback 0	9	**FB0 Loss Cfg** Feedback 0 Loss Configuration Configures how the drive reacts to an error status condition on the feedback 0 device. "Ignore" (0) – No action is taken. "Alarm" (1) – Type 1 alarm indicated. "Flt Minor" (2) – Minor fault indicated. If running, drive continues to run. Enable with P950 [Minor Flt Cfg]. If not enabled, acts like a major fault. "FltCoastStop" (3) – Major fault indicated. Coast to Stop.	Default: Options:	3 = "FltCoastStop" 0 = "Ignore" 1 = "Alarm" 2 = "Flt Minor" 3 = "FltCoastStop"	RW	32-bit Integer

File	Group	No.	Display Name Full Name Description	Values	Read-Write	Data Type
Universal Feedback	Feedback 0	10	**FB0 Sts** Feedback 0 Status Shows feedback specific errors and alarms for the feedback 0 device.		RO	16-bit Integer

Options	Reserved	Reserved	Reserved	Encoder Alm	Reserved	Unsupp Enc	Phase Loss	Quad Loss	Open Wire	SC Amplitude	SpplyVltRng	Diagnostic	Comm	Timeout	Msg Checksum	Encoder Err
Default	0	0	0	0	0	0	0	0	0	0	0	0	0	0	0	0
Bit	15	14	13	12	11	10	9	8	7	6	5	4	3	2	1	0

0 = Condition False
1 = Condition True

Bit 0 "Encoder Err" – When set, indicates that a device specific error has occurred. Further detail can be found for each of the following devices:
- Linear StahI device on Feedback 0, see P27 [FB0 LinStahl Sts] bits 4, 8…14.
- Linear StahI device on Feedback 1, see P57 [FB1 LinStahl Sts] bits 4, 8…14.
- EnDat device on Feedback 0, see Universal Feedback diagnostic Item 9 [FB0 EnDat Sts] bits 0…6.
- EnDat device on Feedback 1, see Universal Feedback diagnostic Item 15 [FB1 EnDat Sts] bits 0…6.
- BiSS device on Feedback 0, see Universal Feedback diagnostic Item 10 [FB0 BiSS Sts] bits 0, 8…15.
- BiSS device on Feedback 1, see Universal Feedback diagnostic Item 16 [FB1 BiSS Sts] bits 0, 8…15.
- Hiperface device (either feedback, 0 or 1), see diagnostic Item 18 [Hiperface Sts] bits 0…31.

Bit 1 "Msg Checksum" – When asserted, the module has experienced a checksum error while attempting to communicate to an encoder via the serial communication channel.

Bit 2 "Timeout" – When asserted, the module has experienced a time out condition while attempting to communicate to the encoder via the serial communication channel.

Bit 3 "Comm" – When asserted, there was an error (except Checksum and Time Out) while attempting to communicate to an encoder via the serial communication channel.

Bit 4 "Diagnostic" – When asserted, the module has experienced a diagnostic test failure on power up.

Bit 5 "SpplyVltRng" – When asserted, the voltage source to the encoder is out of range.

Bit 6 "SC Amplitude" – When asserted, the Universal Feedback option module has detected that the analog Sine/Cosine (SC) signal amplitude is out of tolerance.

Bit 7 "Open Wire" – When asserted, the module has detected an open wire. The open wire condition for A quad B devices checks that the A, B, and Z signals are in opposite states to their corresponding NOT signals. Note that when the "A Chan Only" configuration is selected, the B signal will be ignored. If the "Z Chan Enbl" configuration is not selected, then then the Z signal will be ignored. The open wire condition for sine/cosine devices checks the analog signal levels. An open wire condition will occur when both the sine and cosine signals are smaller than 0.03V. If only one of the two analog signals is missing, then a "SC Amplitude" error condition will occur.

Bit 8 "Quad Loss" – Indicates that there is a signal quadrature error.

Bit 9 "Phase Loss" – Indicates that an A or B signal of an A Quad B Incremental encoder was not detected.

Bit 10 "Unsupp Enc" – Indicates that the connected encoder is not supported.

Bit 12 "Encoder Alm" – When asserted, there is an Encoder Alarm.

		15	**FB0 IncAndSC PPR** Feedback 0 Incremental and Sine Cosine Pulses Per Revolution Indicates the Pulses Per Revolution (Encoder Lines) of the SinCos or A Quad B encoder for the feedback 0 device. When using a permanent magnet motor, the pulses per revolution (PPR) must be an exponent of two. For example: 512, 1024, 2048, 4096, 8192…524288… For the following selections, PPR is automatically read from the encoder: • EnDat SC • BiSS SC (not manually configured) • Hiperface SC For the following selections, PPR has to be entered by the user: • BiSS SC, Manually configured • Gen SinCos • A Quad B **Important:** Parameter is only updated on power up.	Units: Default: Min/Max:	PPR 1024 1 / 100000	RW	32-bit Integer

File	Group	No.	Display Name Full Name Description	Values	Read-Write	Data Type
Universal Feedback	Feedback 0	16	**FB0 Inc Cfg** Feedback 0 Incremental Configuration Configures Incremental Feedback for the feedback 0 device.		RW	16-bit Integer

Options	Reserved	Reserved	Reserved	Reserved	Reserved	Reserved	Reserved	Reserved	Reserved	Reserved	Reserved	Single Ended	Reserved	Edge Mode	A Chan Only	Z Chan Enbl
Default	0	0	0	0	0	0	0	0	0	0	0	0	0	1	0	0
Bit	15	14	13	12	11	10	9	8	7	6	5	4	3	2	1	0

0 = Condition False
1 = Condition True

Bit 0 "Z Chan Enbl" – When set, Channel Z is also monitored for Phase Loss. When cleared, Channel Z is ignored for Phase Loss detection.
Only used if [FB0 Device Sel] = "Inc A B Z."
Bit 1 "A Chan Only" – When set, logic monitors only channel A. When clear, logic monitors both A and B.
Bit 2 "Edge Mode" – When set, speed calc uses AB edge data. When clear, speed calc does not use AB edge data.
Bit 4 "Single Ended" – This bit has to be set if the connected A Quad B encoder has single ended signals. For these encoders, the Phase Loss detection is switched off.

		17	**FB0 Inc Sts** Feedback 0 Incremental Status Displays Incremental Feedback status for the feedback 0 device.		RO	16-bit Integer

Options	Reserved	Reserved	Reserved	Reserved	Reserved	Reserved	Reserved	Reserved	Z Not Input	Z Input	B Not Input	B Input	A Not Input	A Input	A Chan Only	Z Chan Enbl
Default	0	0	0	0	0	0	0	0	0	0	0	0	0	0	0	0
Bit	15	14	13	12	11	10	9	8	7	6	5	4	3	2	1	0

0 = Condition False
1 = Condition True

Bit 0 "Z Chan Enbl" – Indicates that Channel Z is monitored for Phase Loss. Only used if [FB0 Device Sel] = "Inc A B Z."
Bit 1 "A Chan Only" – Indicates only A channel is monitored, B channel not used.
Bit 2 "A Input" – State of encoder A input signal
Bit 3 "A Not Input" – State of encoder A Not input signal
Bit 4 "B Input" – State of encoder B input signal
Bit 5 "B Not Input" – State of encoder B Not input signal
Bit 6 "Z Input" – State of encoder Z input signal
Bit 7 "Z Not Input" – State of encoder Z Not input signal

		20	**FB0 SSI Cfg** Feedback 0 SSI Configuration Configures the communication to a SSI encoder for the feedback 0 device. Transmission format: [MSB...Position...LSB], [Error Bit]*, [Parity Bit]*.		RW	16-bit Integer

Options	Reserved	Reserved	Reserved	Reserved	Reserved	Reserved	Reserved	Reserved	Reserved	Reserved	Reserved	DblWordQuery	Err Bit Enbl	Gray Code	Reserved	Parity Bit
Default	0	0	0	0	0	0	0	0	0	0	0	1	0	1	0	0
Bit	15	14	13	12	11	10	9	8	7	6	5	4	3	2	1	0

0 = Condition False
1 = Condition True

Bit 0 "Parity Bit" – If set, SSI encoder has to support a parity bit (even parity).
Bit 2 "Gray Code" – Enables the gray to binary conversion of the position.
Bit 3 "Err Bit Enbl" – If set, there is an error bit transmitted by the encoder.
Bit 4 "DblWordQuery" – If set, a Double Word Query is executed at startup which means that the same position is transmitted twice by the encoder. If the two positions are not identical, the "Comm" error bit in [FB0 Sts] is set. This bit only needs to be cleared if the encoder does not support Double Word Query and it does not send zeros instead of the second position (which it actually should according to the SSI specification).

File	Group	No.	Display Name Full Name Description	Values		Read-Write	Data Type
Universal Feedback	Feedback 0	21	**FB0 SSI Resol** Feedback 0 SSI Resolution Configures the number of bits for the position within one revolution (resolution) of the SSI encoder for the feedback 0 device. Setting is based on the encoder specifications.	Units: Default: Min/Max:	Bits 13 8 / 32	RW	32-bit Integer
		22	**FB0 SSI Turns** Feedback 0 SSI Turns Configures the number of bits for the revolutions of the SSI encoder for the feedback 0 device. Setting is based on the encoder specifications. Set to 0 for a linear SSI encoder.	Units: Default: Min/Max:	Bits 12 0 / 16	RW	32-bit Integer
		25	**FB0 Lin CPR** Feedback 0 Linear Encoder Counts Per Revolution Specifies the counts per motor revolution for a linear encoder for the feedback 0 device. This reflects the relationship between motor feedback counts and linear feedback counts when using linear load side feedback. When a load side position feedback device is used, the counts per rev for that device must be entered using the effective change in position feedback per one motor revolution, taking into account machine mechanics. The setting for this parameter is not used by encoder but instead is used by the position control routine firmware on the main control board.	Default: Min/Max:	0 0 / 4294967295	RW	32-bit Integer
		26	**FB0 Lin Upd Rate** Feedback Linear Update Rate Sets the sample rate for the linear channel for the feedback 0 device. This determines how often the Universal Feedback module will sample the absolute position device.	Default: Options:	2 = "1.5 ms" 0 = "0.5 ms" 1 = "1.0 ms" 2 = "1.5 ms" 3 = "2.0 ms"	RW	32-bit Integer
		27	**FB0 LinStahl Sts** Feedback 0 Linear Stahl Status Displays the error status of the linear Stahl encoder for the feedback 0 device.			RO	16-bit Integer

Options	Reserved	No Position	Reserved	ROM Error	EPROM Error	RAM Error	Read Head 2	Read Head 1	Reserved	Reserved	Reserved	OutOfRailErr	Reserved	Reserved	OutOfRailAlm	Optics Alarm
Default	0	0	0	0	0	0	0	0	0	0	0	0	0	0	0	0
Bit	15	14	13	12	11	10	9	8	7	6	5	4	3	2	1	0

0 = Condition False
1 = Condition True

Bit 0 "Optics Alarm" – Displays an alarm when optics require cleaning.
Bit 1 "OutOfRailAlm" – Indicates that the read encoder count is at the maximum value (524,287).
Bit 4 "OutOfRailErr" – Indicates that there is no more room between the read head and the rail.
Bit 8 "Read Head 1" – Indicates that the read head must be cleaned or installed correctly.
Bit 9 "Read Head 2" – Indicates that the read head must be cleaned or installed correctly.
Bit 10 "RAM Error" – Indicates a RAM error. Reading head needs to be repaired.
Bit 11 "EPROM Error" – Indicates an EPROM error. Reading head needs to be repaired.
Bit 12 "ROM Error" – Indicates a ROM error. Reading head needs to be repaired.
Bit 14 "No Position" – Indicates that no position value was available. Only happens after power on or reset.

File	Group	No.	Display Name Full Name Description	Values		Read-Write	Data Type
Universal Feedback	Feedback 1	35	**FB1 Position** Feedback 1 Position Displays the position value from the feedback 1 device. For parameter 36 [FB1 Device Select] options 1, 2, 3, and 4, one revolution of the feedback = 1048576. For options 11, 12, and 13, typically one revolution of the feedback is 4 x Pulses Per Revolution.	Default: Min/Max:	0 –2147483648 / 2147483647	RO	32-bit Integer
		36	**FB1 Device Sel** Feedback 1 Device Select Specifies the encoder type for the feedback 1 device. In some cases, there is a choice of terminal blocks to use. Channel X refers to devices wired to TB1 and Channel Y refers to TB2. "None" (0) – No feedback device selected. Use this selection if the feedback device is unused. For example, only one feedback device is present and it is used on the other feedback. "EnDat SC" (1) – EnDat encoder with sine/cosine signals (Heidenhain). Terminal block 1. "Hiperface SC" (2) – Hiperface encoder with sine/cosine signals (Stegmann). Terminal block 1. The following Hiperface Type ID codes are supported: 02h, 07h, 22h, 27h, 23h, and 37h. Refer to manufacturer data sheet for more information. "BiSS SC" (3) – BiSS encoder with sine/cosine signals. Terminal block 1. "SSI SC" (4) – SSI encoder with sine/cosine signals. Terminal block 1. "EnDat FD ChX" (5) – Full digital EnDat encoder without sine/cosine signals (Heidenhain). Terminal block 1. "EnDat FD ChY" (6) – Full digital EnDat encoder without sine/cosine signals (Heidenhain). Terminal block 2. "BiSS FD ChX" (7) – Full digital BiSS encoder without sine/cosine signals. Terminal block 1. "BiSS FD ChY" (8) – Full digital BiSS encoder without sine/cosine signals. Terminal block 2. "SSI FD ChX" (9) – SSI Full Digital ChX "SSI FD ChY" (10) – SSI Full Digital ChY "SinCos Only" (11) – Generic sine/cosine encoder. Terminal block 1. "Inc A B Z" (12) – A Quad B encoder with Z marker. Terminal block 1, Pins 17…22. "Inc SC" (13) – A Quad B encoder without Z marker. Terminal block 1, Pins 1…4. "LinTempo ChX" (14) – Temposonic linear encoder. Terminal block 1. "LinTempo ChY" (15) – Temposonic linear encoder. Terminal block 2. "LinStahl ChX" (16) – Stahl linear encoder. Terminal block 1. "LinStahl ChY" (17) – Stahl linear encoder. Terminal block 2. "LinSSI ChX" (18) – Any linear encoder with an SSI interface. Terminal block 1. "LinSSI ChY" (19) – Any linear encoder with an SSI interface. Terminal block 2.	Default: Options:	0 = "None" 0 = "None" 1 = "EnDat SC" 2 = "Hiperface SC" 3 = "BiSS SC" 4 = "SSI SC" 5 = "EnDat FD ChX" 6 = "EnDat FD ChY" 7 = "BiSS FD ChX" 8 = "BiSS FD ChY" 9 = "SSI FD ChX" 10 = "SSI FD ChY" 11 = "SinCos Only" 12 = "Inc A B Z" 13 = "Inc SC" 14 = "LinTempo ChX" 15 = "LimTempo ChY" 16 = "LinStahl ChX" 17 = "LinStahl ChY" 18 = "LinSSI ChX" 19 = "LinSSI ChY"	RW	Real

File	Group	No.	Display Name Full Name Description	Values	Read-Write	Data Type
Universal Feedback	Feedback 1	37	**FB1 Identify** Feedback 1 Identify Displays the used encoder type for the feedback 1 device, e.g. Multi turn, rotary encoder with EnDat 2.1 interface including SIN/COS incremental signals.		RO	16-bit Integer

Options	Reserved	Stahl	Temposonic	SSI	BiSS	Hiperface	EnDat 2p2	EnDat 2p1	Incremental	Full Digital	Sin Cos	Enh Resol	Multi Turn	Single Turn	Linear	Rotary
Default	0	0	0	0	0	0	0	0	0	0	0	0	0	0	0	0
Bit	15	14	13	12	11	10	9	8	7	6	5	4	3	2	1	0

0 = Condition False
1 = Condition True

Bit 0 "Rotary" – Rotary encoder (incremental type).

Bit 1 "Linear" – Linear encoder (Temposonic and Stahl type).

Bit 2 "Single Turn" – Single turn absolute encoder. This encoder type can only track absolute position for one turn of the encoder shaft.

Bit 3 "Multi Turn" – Multiturn absolute encoder. This encoder type can track absolute position across multiple encoder turns.

Bit 4 "Enh Resol" – High resolution encoder. This bit is set if there are more than 24 bits resolution (full digital encoders) or the PPR is greater than or equal to 16384. If this bit is set, Bit 1 "24-bit Resol" in parameter [FB0 Cfg] should also be set.

Bit 5 "Sin Cos" – Sine / Cosine encoder, abbreviated SC. This encoder type makes use of an analog sine/cosine signal pair. This is the analog counterpart to the A quad B incremental encoder. A fine interpolation algorithm is sometimes used to provide high resolution feedback by processing the full sine/cosine cycle. Lower resolution feedback is also implemented by counting only zero crossings.

Bit 6 "Full Digital" – Full digital encoder, abbreviated FD. Refers to devices that use a serial communication interface, such as a clock and data lines to transmit data to/from the module. The analog (sine/cosine) signals are not used with a Full Digital interface.

Bit 7 "Incremental" – Typically an A quad B encoder, with optional Z (marker) channel. "A Channel Only" is possible (no B channel), but rarely used because this configuration lacks direction capability. Single channel incremental could be used to provide a speed (magnitude only) reference signal.

Bit 8 "EnDat 2p1" – Heidenhain absolute encoder with EnDat 2.1 command set support. EnDat is a proprietary protocol developed by Heidenhain. It is a synchronous, bidirectional serial interface. EnData is a full digital interface.

Bit 9 "EnDat 2p2" – Heidenhain EnDat 2.2 command set support. This version supports incremental as well as absolute encoders.

Bit 10 "Hiperface" – Dedicated serial interface protocol for Stegmann devices. Hiperface is short for High Performance Interface. This interface makes use of both analog (sine/cosine) and digital (clock/data) signals.

Bit 11 "BiSS" – Bidirectional Sychronous Serial Interface. This is an open protocol and is hardware-compatible with SSI. Both mixed SC with digital and FD types are supported. Presently, only BiSS encoders from Hengstler GmbH are supported.

Bit 12 "SSI" – Synchronous Serial Interface. Only the mixed SC with digital version is supported. Rotary version is mixed analog/digital, linear version is full digital.

Bit 13 "Temposonic" – Linear position sensor from MTS Systems Corp. Full digital SSI interface, absolute device uses magnetostrictive technology.

Bit 14 "Stahl" – Linear position sensor from Stahl GmbH. Full digital SSI interface, absolute device uses an encoded rail.

File	Group	No.	Display Name Full Name Description	Values	Read-Write	Data Type
Universal Feedback	Feedback 1	38	**FB1 Cfg** Feedback 1 Configuration Configure the direction, position data format, as well as the baud rate for the serial communication interface for the feedback 1 device.		RW	16-bit Integer
		39	**FB1 Loss Cfg** Feedback 1 Loss Configuration Configures how the drive reacts to an error status condition on the feedback 1 device. "Ignore" (0) – No action is taken. "Alarm" (1) – Type 1 alarm indicated. "Flt Minor" (2) – Minor fault indicated. If running, drive continues to run. Enable with P950 [Minor Flt Cfg]. If not enabled, acts like a major fault. "FltCoastStop" (3) – Major fault indicated. Coast to Stop.	Default: 3 = "FltCoastStop" Options: 0 = "Ignore" 1 = "Alarm" 2 = "Flt Minor" 3 = "FltCoastStop"	RW	32-bit Integer
		40	**FB1 Sts** Feedback 1 Status Shows feedback specific errors and alarms for the feedback 1 device.		RO	16-bit Integer

Options	Reserved	Reserved	Reserved	Reserved	Reserved	Reserved	Reserved	Reserved	Reserved	Reserved	Reserved	Reserved	SC Quadrant	FD Low Baud	24-bit Resol	Direction
Default	0	0	0	0	0	0	0	0	0	0	0	0	0	0	0	0
Bit	15	14	13	12	11	10	9	8	7	6	5	4	3	2	1	0

0 = Condition False
1 = Condition True

Bit 0 "Direction" – Inverts the direction internally.

Bit 1 "24-bit Resol" – If set, the data format of the parameter [FB1 Position] is set to 8/24 (8 bit resolution, 24 bits position within one revolution). Otherwise, the data format is set to 12/20. It only makes sense to set this bit if the bit "Enh Resol" in parameter [FB1 Identify] is set.

Bit 2 "FD Low Baud" – Reduces the communication baud rate from the default setting for the connected encoder with a serial communication channel.

Bit 3 "SC Quadrant" – Reserved for future use.

Options	Reserved	Reserved	Reserved	Encoder Alm	Reserved	Unsupp Enc	Phase Loss	Quad Loss	Open Wire	SC Amplitude	SpplyVltRng	Diagnostic	Comm	Timeout	Msg Checksum	Encoder Err
Default	0	0	0	0	0	0	0	0	0	0	0	0	0	0	0	0
Bit	15	14	13	12	11	10	9	8	7	6	5	4	3	2	1	0

0 = Condition False
1 = Condition True

Bit 0 "Encoder Err" – When asserted, there is an Encoder Error.

Bit 1 "Msg Checksum" – When asserted, the module has experienced a checksum error while attempting to communicate to an encoder via the serial communication channel.

Bit 2 "Timeout" – When asserted, the module has experienced a time out condition while attempting to communicate to the encoder via the serial communication channel.

Bit 3 "Comm" – When asserted, there was an error (except Checksum and Time Out) while attempting to communicate to an encoder via the serial communication channel.

Bit 4 "Diagnostic" – When asserted, the module has experienced a diagnostic test failure on power up.

Bit 5 "SpplyVltRng" – When asserted, the voltage source to the encoder is out of range.

Bit 6 "SC Amplitude" – When asserted, the module detected that the encoder signal amplitude is out of tolerance.

Bit 7 "Open Wire" – When asserted, the module has detected an open wire.

Bit 8 "Quad Loss" – Indicates that there is a signal quadrature error.

Bit 9 "Phase Loss" – Indicates that an A or B signal of an A Quad B Incremental encoder is disconnected.

Bit 10 "Unsupp Enc" – Indicates that the connected encoder is not supported.

Bit 12 "Encoder Alm" – When asserted, there is an Encoder Alarm.

File	Group	No.	Display Name Full Name Description	Values		Read-Write	Data Type
Universal Feedback	Feedback 1	45	**FB1 IncAndSC PPR** Feedback 1 Incremental and Sine Cosine Pulses Per Revolution Indicates the Pulses Per Revolution (Encoder Lines) of the SinCos or A Quad B encoder for the feedback 1 device. For the following selections, PPR is automatically read from the encoder: • EnDat SC • BiSS SC (not manually configured) • Hiperface SC For the following selections, PPR has to be entered by the user: • BiSS SC, Manually configured • Gen SinCos • A Quad B	Units: Default: Min/Max:	PPR 1024 1 / 100000	RW	32-bit Integer
		46	**FB1 Inc Cfg** Feedback 1 Incremental Configuration Configures Incremental Feedback for the feedback 1 device. Options: Reserved, Reserved, Reserved, Reserved, Reserved, Reserved, Reserved, Reserved, Reserved, Reserved, Reserved, Single Ended, Reserved, Edge Mode, A Chan Only, Z Chan Enbl Default: 0 0 0 0 0 0 0 0 0 0 0 0 0 1 0 0 Bit: 15 14 13 12 11 10 9 8 7 6 5 4 3 2 1 0 0 = Condition False 1 = Condition True Bit 0 "Z Chan Enbl" – When set, Channel Z is also monitored for Phase Loss. When cleared, Channel Z is ignored for Phase Loss detection. Only used if [FB1 Device Sel] = "Inc A B Z." Bit 1 "A Chan Only" – When set, logic monitors only channel A. When clear, logic monitors both A and B. Bit 2 "Edge Mode" – When set, speed calc uses AB edge data. When clear, speed calc does not use AB edge data. Bit 4 "Single Ended" – This bit has to be set if the connected A Quad B encoder has single ended signals. For these encoders, the Phase Loss detection is switched off.			RW	16-bit Integer
		47	**FB1 Inc Sts** Feedback 1 Incremental Status Displays Incremental Feedback status for the feedback 1 device. Options: Reserved, Reserved, Reserved, Reserved, Reserved, Reserved, Reserved, Reserved, Z Not Input, Z Input, B Not Input, B Input, A Not Input, A Input, A Chan Only, Z Chan Enbl Default: 0 0 0 0 0 0 0 0 0 0 0 0 0 0 0 0 Bit: 15 14 13 12 11 10 9 8 7 6 5 4 3 2 1 0 0 = Condition False 1 = Condition True Bit 0 "Z Chan Enbl" – Indicates that Channel Z is monitored for Phase Loss. Only used if [FB1 Device Sel] = "Inc A B Z." Bit 1 "A Chan Only" – Indicates only A channel is monitored, B channel not used. Bit 2 "A Input" – State of encoder A input signal Bit 3 "A Not Input" – State of encoder A Not input signal Bit 4 "B Input" – State of encoder B input signal Bit 5 "B Not Input" – State of encoder B Not input signal Bit 6 "Z Input" – State of encoder Z input signal Bit 7 "Z Not Input" – State of encoder Z Not input signal			RO	16-bit Integer

File	Group	No.	Display Name Full Name Description	Values		Read-Write	Data Type
Universal Feedback	Feedback 1	50	**FB1 SSI Cfg** Feedback 1 SSI Configuration Configures the communication to a SSI encoder for the feedback 1 device. Transmission format: [MSB...Position...LSB], [Error Bit]*, [Parity Bit]*.			RW	16-bit Integer

Options	Reserved	Reserved	Reserved	Reserved	Reserved	Reserved	Reserved	Reserved	Reserved	Reserved	Reserved	DblWordQuery	Err Bit Enbl	Gray Code	Reserved	Parity Bit
Default	0	0	0	0	0	0	0	0	0	0	0	1	0	1	0	0
Bit	15	14	13	12	11	10	9	8	7	6	5	4	3	2	1	0

0 = Condition False
1 = Condition True

Bit 0 "Parity Bit" – If set, SSI encoder has to support a parity bit (even parity).
Bit 2 "Gray Code" – Enables the gray to binary conversion of the position.
Bit 3 "Err Bit Enbl" – If set, there is an error bit transmitted by the encoder.
Bit 4 "DblWordQuery" – If set, a Double Word Query is executed at startup which means that the same position is transmitted twice by the encoder. If the two positions are not identical, the "Comm" error bit in [FB1 Sts] is set. This bit only needs to be cleared if the encoder does not support Double Word Query and it does not send zeros instead of the second position (which it actually should according to the SSI specification).

No.	Display Name	Values		Read-Write	Data Type
51	**FB1 SSI Resol** Feedback 1 SSI Resolution Configures the number of bits for the position within one revolution (resolution) of the SSI encoder for the feedback 1 device.	Units: Default: Min/Max:	Bits 13 8 / 32	RW	32-bit Integer
52	**FB1 SSI Turns** Feedback 1 SSI Turns Configures the number of bits for the revolutions of the SSI encoder for the feedback 0 device. Setting is based on the encoder specifications. Set to 0 for a linear SSI encoder.	Units: Default: Min/Max:	Bits 12 0 / 16	RW	32-bit Integer
55	**FB1 Lin CPR** Feedback 1 Linear Encoder Counts Per Revolution Specifies the counts per motor revolution for a linear encoder for the feedback 1 device.	Default: Min/Max:	0 0 / 4294967295	RW	32-bit Integer
56	**FB1 Lin Upd Rate** Feedback Linear Update Rate Sets the sample rate for the linear channel for the feedback 1 device.	Default: Options:	2 = "1.5 ms" 0 = "0.5 ms" 1 = "1.0 ms" 2 = "1.5 ms" 3 = "2.0 ms"	RW	32-bit Integer
57	**FB1 LinStahl Sts** Feedback 1 Linear Stahl Status Displays the error status of the linear Stahl encoder for the feedback 1 device.			RO	16-bit Integer

Options	Reserved	No Position	Reserved	ROM Error	EPROM Error	RAM Error	Read Head 2	Read Head 1	Reserved	Reserved	Reserved	OutOfRailErr	Reserved	Reserved	OutOfRailAlm	Optics Alarm
Default	0	0	0	0	0	0	0	0	0	0	0	0	0	0	0	0
Bit	15	14	13	12	11	10	9	8	7	6	5	4	3	2	1	0

0 = Condition False
1 = Condition True

Bit 0 "Optics Alarm" – Displays an alarm when fiber optics require cleaning.
Bit 1 "OutOfRailAlm" – Indicates that the read encoder count is at the maximum value (524,287).
Bit 4 "OutOfRailErr" – Indicates that there is no more room between the read head and the rail.
Bit 8 "Read Head 1" – Indicates that the read head must be cleaned or installed correctly.
Bit 9 "Read Head 2" – Indicates that the read head must be cleaned or installed correctly.
Bit 10 "RAM Error" – Indicates a RAM error. Reading head needs to be repaired.
Bit 11 "EPROM Error" – Indicates an EPROM error. Reading head needs to be repaired.
Bit 12 "ROM Error" – Indicates a ROM error. Reading head needs to be repaired.
Bit 14 "No Position" – Indicates that no position value was available. Only happens after power on or reset.

File	Group	No.	Display Name Full Name Description	Values		Read-Write	Data Type
Universal Feedback	Encoder Out	80	**Enc Out Sel** Encoder Output Select Selects the Encoder Output. If the feedback 0 or 1 device is configured as A Quad B Z then this parameter has to be set to None. Otherwise, there is an Encoder Output Alarm (Bit 16 of [Module Sts]).	Default: Options:	0 = "None" 0 = "None" 1 = "Reserved" 2 = "Sine Cosine" 3 = "Channel X" (FB0 Channel) 4 = "Channel Y" (FB1 Channel)	RW	32-bit Integer
		81	**Enc Out Mode** Encoder Output Mode Configures the Encoder Output type. "A Quad B" (0) – Sets the phase relationship between the A and B signal. "Inv A Quad B" (1) – Inverts the phase relationship between the A and B signal. Forward and reverse exchange meanings.	Default: Options:	0 = "A Quad B" 0 = "A Quad B" 1 = "Inv A Quad B"	RW	32-bit Integer
		82	**Enc Out FD PPR** Full Digital Encoder Feedback Emulator Output Pulses Per Revolution Specifies the emulated encoder output PPR when the Feedback Selection (FB device 0/1 Sel) is set to Full Digital (values 5…10). When the Feedback selection is set to Sin/Cos "SC", the Sin/Cos native PPR defines the emulated encoder outputs PPR.	Default: Options:	1 = "1024 PPR" 0 = "512 PPR" 1 = "1024 PPR" 2 = "2048 PPR" 3 = "4096 PPR"	RW	32-bit Integer
		83	**Enc Out Z Offset** Encoder Output Z Offset Configures the offset of the Z pulse for both simulated and emulated encoder output. The marker offset is specified within one revolution. Simulated mode is used for full digital rotary devices and is selected by "Channel X" and "Channel Y" in P80 [Enc Out Sel]. Emulated mode is used when "Sine Cosine" devices are selected in P80 [Enc Out Sel]. The encoder output function cannot be used with linear feedback devices.	Units: Default: Min/Max:	PPR 0 0 / 100000	RW	32-bit Integer
		84	**Enc Out Z PPR** Encoder Output Z Pulses Per Revolution Configures the number of Z-Pulses per encoder revolution. For example, if "32 Z-Pulses" (5) is selected, then 32 Z pulses will be generated for each complete revolution of the full digital input encoder. Each input encoder revolution will produce the number of output pulses specified on the A and B output channels in addition to 32 pulses on the Z output channel. The Z pulses will be evenly spaced throughout the specified number of A/B output pulses.	Default: Options:	0 = "1 Z-Pulse" 0 = "1 Z-Pulse" 1 = "2 Z-Pulses" 2 = "4 Z-Pulses" 3 = "8 Z-Pulses" 4 = "16 Z-Pulses" 5 = "32 Z-Pulses"	RW	32-bit Integer

File	Group	No.	Display Name Full Name Description	Values	Read-Write	Data Type
Universal Feedback	Registration	90	**Rgsn Arm** Registration Arm Selects Registration Latches to be used.		RW	16-bit Integer

Options	Reserved	Reserved	Reserved	Reserved	Reserved	Reserved	Arm Latch 10	Arm Latch 9	Arm Latch 8	Arm Latch 7	Arm Latch 6	Arm Latch 5	Arm Latch 4	Arm Latch 3	Arm Latch 2	Arm Latch 1
Default	0	0	0	0	0	0	0	0	0	0	0	0	0	0	0	0
Bit	15	14	13	12	11	10	9	8	7	6	5	4	3	2	1	0

0 = Condition False
1 = Condition True

File	Group	No.	Display Name Full Name Description	Values		Read-Write	Data Type
Universal Feedback	Registration	91	**Rgsn In 0 Filter** Registration Input 0 Filter Configures a digital filter for the registration input 0. This filter can be used to reject spurious noise. The filter works by waiting a programmed time before deciding that the signal is valid. This waiting imposes a mandatory delay in the registration signal. The filter delay is programmable in increments of 100 nanoseconds from 0 (or no delay) up to 1500 nanoseconds.	Default: Options:	0 = "0 ns" 0 = "0 ns" 1 = "100 ns" 2 = "200 ns" 3 = "300 ns" 4 = "400 ns" 5 = "500 ns" 6 = "600 ns" 7 = "700 ns" 8 = "800 ns" 9 = "900 ns" 10 = "1000 ns" 11 = "1100 ns" 12 = "1200 ns" 13 = "1300 ns" 14 = "1400 ns" 15 = "1500 ns"	RW	Real
		92	**Rgsn In 1 Filter** Registration Input 1 Filter Configures a digital filter for the registration input 1. This filter can be used to reject spurious noise. The filter works by waiting a programmed time before deciding that the signal is valid. This waiting imposes a mandatory delay in the registration signal. The filter delay is programmable in increments of 100 nanoseconds from 0 (or no delay) up to 1500 nanoseconds.	Default: Options:	0 = "0 ns" 0 = "0 ns" 1 = "100 ns" 2 = "200 ns" 3 = "300 ns" 4 = "400 ns" 5 = "500 ns" 6 = "600 ns" 7 = "700 ns" 8 = "800 ns" 9 = "900 ns" 10 = "1000 ns" 11 = "1100 ns" 12 = "1200 ns" 13 = "1300 ns" 14 = "1400 ns" 15 = "1500 ns"	RW	Real
		93	**Rgsn HmIn Filter** Registration Home Input Filter Configures a digital filter for the home input. This filter can be used to reject spurious noise. The filter works by waiting a programmed time before deciding that the signal is valid. This waiting imposes a mandatory delay in the registration signal. The filter delay is programmable in increments of 100 nanoseconds from 0 (or no delay) up to 1500 nanoseconds.	Default: Options:	0 = "0 ns" 0 = "0 ns" 1 = "100 ns" 2 = "200 ns" 3 = "300 ns" 4 = "400 ns" 5 = "500 ns" 6 = "600 ns" 7 = "700 ns" 8 = "800 ns" 9 = "900 ns" 10 = "1000 ns" 11 = "1100 ns" 12 = "1200 ns" 13 = "1300 ns" 14 = "1400 ns" 15 = "1500 ns"	RW	Real

File	Group	No.	Display Name Full Name Description	Values	Read-Write	Data Type
Universal Feedback	Registration	94	**Rgsn Sts** Registration Status Status of the configured registration events.		RO	16-bit Integer

Options	Home Input	Rgsn Input 1	Rgsn Input 0	Reserved	Reserved	Reserved	Reserved	Reserved	Reserved	Reserved	Reserved	Reserved	Latch10Found	Latch10Armed	Latch9 Found	Latch9 Armed	Latch8 Found	Latch8 Armed	Latch7 Found	Latch7 Armed	Latch6 Found	Latch6 Armed	Latch5 Found	Latch5 Armed	Latch4 Found	Latch4 Armed	Latch3 Found	Latch3 Armed	Latch2 Found	Latch2 Armed	Latch1 Found	Latch1 Armed
Default	0	0	0	0	0	0	0	0	0	0	0	0	0	0	0	0	0	0	0	0	0	0	0	0	0	0	0	0	0	0	0	0
Bit	31	30	29	28	27	26	25	24	23	22	21	20	19	18	17	16	15	14	13	12	11	10	9	8	7	6	5	4	3	2	1	0

0 = False
1 = True

File	Group	No.	Display Name Full Name Description	Values	Read-Write	Data Type
Universal Feedback	Registration	100 103 106 109 112 115 118 121 124 127	**Rgsn Latch1 Cfg** **Rgsn Latch2 Cfg** **Rgsn Latch3 Cfg** **Rgsn Latch4 Cfg** **Rgsn Latch5 Cfg** **Rgsn Latch6 Cfg** **Rgsn Latch7 Cfg** **Rgsn Latch8 Cfg** **Rgsn Latch9 Cfg** **Rgsn Latch10 Cfg** Registration Latch *n* Configure Configures Registration Latch *n*. The registration function consists of 10 sets of latches. The latched data includes a feedback position and associated time parameter. Time is relative to when the feedback devices were last sampled. Once the registration function has been armed, the values for these parameters are captured (latched) upon the occurrence of a trigger event. See functionality tables on following page. The registration trigger for each latch is separately configured by its Latch Configuration Parameter. Refer to Figure 2 on page 297. The trigger logic includes two separate trigger stages. Each trigger stage is separately configured to use one of three possible registration input signals or the marker (Z pulse) of the selected feedback channel. Trigger combination logic determines how the two stages are combined to define the trigger event conditions.		RO	16-bit Integer

Options	Reserved	Stg2EdgeFall	Stg2EdgeRise	Reserved	Stg2 In b1	Stg2 In b0	Logic Sel b1	Logic Sel b0	Stg1EdgeFall	Stg1EdgeRise	Reserved	Stg1 In b1	Stg1 In b0	Rev Capture	Fwd Capture	Channel Sel
Default	0	0	0	0	0	0	0	0	0	0	0	0	0	0	0	0
Bit	15	14	13	12	11	10	9	8	7	6	5	4	3	2	1	0

0 = Condition False
1 = Condition True

Bit 0 “Channel Sel” – Channel select (FB0 or FB1).
Bit 1 “Fwd Capture” – Direction select forward.
Bit 2 “Rev Capture” – Direction select reverse.
Bit 3 “Stg1 In b0” – Latch stage 1 input selection b0
Bit 4 “Stg1 In b1” – Latch stage 1 input selection b1
Bit 6 “Stg1EdgeRise” – Latch stage 1 edge/level select: Rising edge or high level
Bit 7 “Stg1EdgeFall” – Latch stage 1 edge/level select: Falling edge or low level
Bit 8 “Logic Sel b0” – Trigger stage combination logic
Bit 9 “Logic Sel b1” – Trigger stage combination logic
Bit 10 “Stg2 In b0” – Latch stage 2 input selection b0
Bit 11 “Stg2 In b1” – Latch stage 2 input selection b1
Bit 13 “Stg2EdgeRise” – Latch stage 2 edge/level select: Rising edge or high level
Bit 14 “Stg2EdgeFall” – Latch stage 2 edge/level select: Falling edge or low level

Universal Feedback

Registration

Registration Latch Configuration Parameters

Functionality of the Registration Latch Configuration parameter bits are listed in the tables that follow.

The registration parameters P100, P103, P106, . . .P127 can only be used when the drive's Spindle Orientation and Homing functions are active. These functions will overwrite any manually entered configuration.

Feedback Selection

Selects the feedback device for registration and marker pulse.

Bit 0 "Channel Sel" – 0 = Feedback 0
1 = Feedback 1

Direction Selection.

Bit 2 "Rev Capture"	Bit 1 "Fwd Capture"	Description
0	1	Latch only if rotation is forward
1	0	Latch only if rotation is reverse
1	1	Latch for both forward and reverse rotation
0	0	Not defined. No latch will occur

Trigger Stage 1

Bit 4 "Stg1 In b1"	Bit 3 "Stg1 In b0"	Description
0	0	Registration Input 0 (TB2: -R0, +R0)
0	1	Registration Input 0 (TB2: -R1, +R1)
1	0	Home Input (TB2: -Hm, +Hm)
1	1	Marker Input of respective feedback channel. (Z channel must be activated for respective feedback channel.)

Bit 7 "Stg1EdgeFall"	Bit 6 "Stg1EdgeRise"	Description
0	0	Trigger Disabled
0	1	Trigger on rising edge or high level of signal
1	0	Trigger on falling edge or low level of signal
1	1	Trigger on either edge. (Invalid as level select. Result is always true for level select.)

Trigger Stage Combination Logic

The two trigger stages are combined to form the final or resulting trigger condition for each registration latch.

Bit 9 "Logic Sel b1"	Bit 8 "Logic Sel b0"	Description
0	0	None: Stage 1 Only (Stage 2 ignored)
0	1	THEN: Stage 1 Edge Transition THEN Stage 2 Edge Transition
1	0	OR: Stage 1 Edge Transition OR Stage 2 Edge Transition
1	1	AND: Stage 1 Level Transition AND Stage 2 Level Transition

Trigger Stage 2

Bit 11 "Stg2 In b1"	Bit 10 "Stg1 In b0"	Description
0	0	Registration Input 0 (TB2: -R0, +R0)
0	1	Registration Input 0 (TB2: -R1, +R1)
1	0	BEFORE: Stage 1 edge causes acquisition of time and position data. Stage 2 edge causes the latch of the last acquired position.
1	1	Marker Input of respective feedback channel. (Z channel must be activated for respective feedback channel.)

Bit 14 "Stg2EdgeFall"	Bit 13 "Stg2EdgeRise"	Description
0	0	Trigger Disabled
0	1	Trigger on rising edge or high level of signal
1	0	Trigger on falling edge or low level of signal
1	1	Trigger on either edge. (Invalid as level select. Result is always true for level select.)

Figure 2 - Registration Trigger Logic

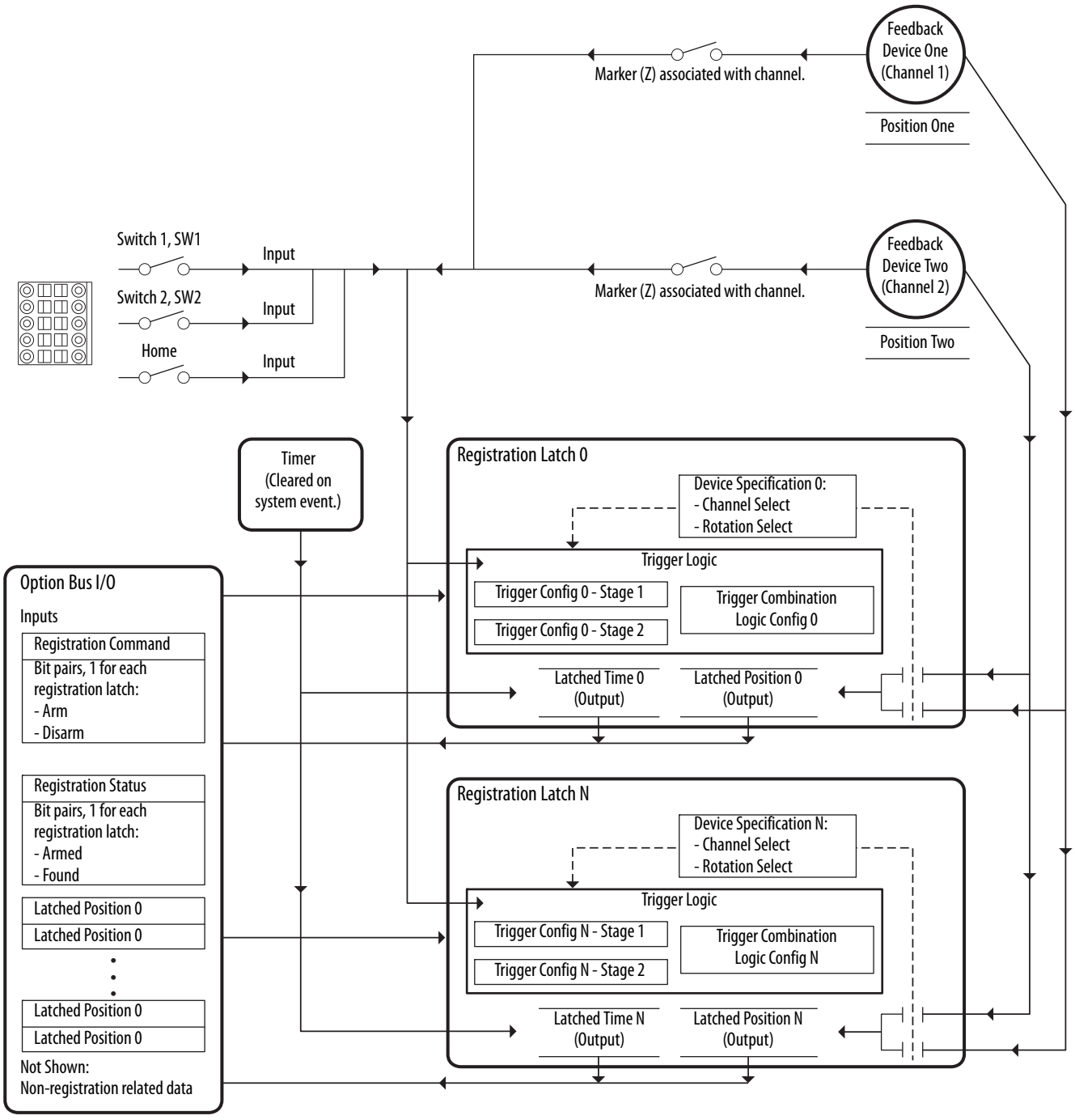

File	Group	No.	Display Name Full Name Description	Values		Read-Write	Data Type
Universal Feedback	Registration	**101** **104** **107** **110** **113** **116** **119** **122** **125** **128**	**Rgsn Latch1 Psn** **Rgsn Latch2 Psn** **Rgsn Latch3 Psn** **Rgsn Latch4 Psn** **Rgsn Latch5 Psn** **Rgsn Latch6 Psn** **Rgsn Latch7 Psn** **Rgsn Latch8 Psn** **Rgsn Latch9 Psn** **Rgsn Latch10 Psn** Registration Latch X Position Position Captured during the Registration Event for Latch X.	Default: Min/Max:	0 2147483648 / 2147483647	RO	32-bit Integer
		102 **105** **108** **111** **114** **117** **120** **123** **126** **129**	**Rgsn Latch1 Time** **Rgsn Latch2 Time** **Rgsn Latch3 Time** **Rgsn Latch4 Time** **Rgsn Latch5 Time** **Rgsn Latch6 Time** **Rgsn Latch7 Time** **Rgsn Latch8 Time** **Rgsn Latch9 Time** **Rgsn Latch10 Time** Registration Latch X Time Time Captured when the Registration Event occurred for Latch X.	Units: Default: Min/Max:	Cnt 0 0 / 4294967295	RO	32-bit Integer

Safe Speed Monitor Module Parameters

For detailed information on the Safe Speed Monitor option, refer to the Safe Speed Monitor Option Module for PowerFlex 750-Series AC Drives Safety Reference Manual, publication 750-RM001.

File	Group	No.	Display Name Full Name Description	Values		Read-Write	Data Type
Safe Speed Monitor	Security	1	**Password** Password Password for Lock and Unlock function.	Default: Min/Max:	N/A 0 / 4294967295	RW	32-bit Integer
		5	**Lock State** Lock State Command to lock or unlock the safety option configuration.	Default: Options:	0 = "Unlock" 0 = "Unlock" 1 = "Lock"	RW	8-bit Integer
		6	**Operating Mode** Operating Mode Command to place the system in Program or Run mode.	Default: Options:	0 = "Program" 0 = "Program" 1 = "Run" 2 = "Config Fault"	RW	8-bit Integer
		7	**Reset Defaults** Reset Defaults Resets safety option to factory defaults.	Default: Options:	0 = "No Action" 0 = "No Action" 1 = "Reset Fac" (Reset to factory defaults)	RW	8-bit Integer
		10	**Signature ID** Signature Identifier Safety configuration identifier.	Default: Min/Max:	N/A 0 / 4294967295	RO	32-bit Integer
		13	**New Password** New Password 32-Bit configuration password.	Default: Min/Max:	N/A 0 / 4294967295	RW	32-bit Integer
		17	**Password Command** Password Command Save new password command.	Default: Options:	0 = "No Action" 0 = "No Action" 1 = "Change PW" (Change Password) 2 = "Reset PW" (Reset Password)	RW	8-bit Integer
		18	**Security Code** Security Code Used for Reset Password command.	Default: Min/Max:	N/A 0 / 4294967295	RO	32-bit Integer
		19	**Vendor Password** Vendor Password Vendor password for Reset Password command.	Default: Min/Max:	N/A 0 / 65535	RW	16-bit Integer

File	Group	No.	Display Name Full Name Description	Values		Read-Write	Data Type
Safe Speed Monitor	Security	**70**	**Config Flt Code** Configuration Fault Code 0 = No Fault 1 = Password Required (Password Req) 2 = P21 [Safety Mode] value not legal based on P20 [Cascaded Config] value. 3 = P57 [Door Out Type] value not legal based on P20 [Cascaded Config] value. 4 = P46 [Stop Mon Delay] value not legal based on P45 [Safe Stop Type] value. 5 = P50 [Decel Ref Speed] value not legal based on P31 [Fbk 1 Resolution] value. 6 = P48 [Standstill Speed] value not legal based on P20 [Cascaded Config] value. 7 = P53 [LimSpd Mon Delay] value not legal based on P21 [Safety Mode] value. 8 = P55 [Safe Speed Limit] value not legal based on P21 [Safety Mode] and P31 [Fbk 1 Resolution] value. 9 = P56 [Speed Hysteresis] value not legal based on P21 [Safety Mode] value. 10 = P62 [Safe Max Speed] value not legal based on P31 [Fbk 1 Resolution] value. 11 = P42 [Direction Mon] value not legal based on P21 [Safety Mode] value. 12 = P59 [Lock Mon Enable] value not legal based on P21 [Safety Mode] value. 13 = P36 [Fbk 2 Resolution] value not legal based on P27 [Fbk Mode] value. 14 = P35 [Fbk 2 Polarity] value not legal based on P27 [Fbk Mode] value. 15 = P39 [Fbk Speed Ratio] value not legal based on P27 [Fbk Mode] value. 16 = P41 [Fbk Pos Tol] value not legal based on P27 [Fbk Mode] value. 17 = P40 [Fbk Speed Tol] value not legal based on P27 [Fbk Mode] value. 18 = P44 [Safe Stop In Typ] value not legal based on P21 [Safety Mode] value. 19 = P52 [Lim Spd In Typ] value not legal based on P21 [Safety Mode] value. 20 = P58 [DM Input Type] value not legal based on P20 [Cascaded Config] and P21 [Safety Mode] value. 21 = P54 [Enable SW In Typ] value not legal based on P21 [Safety Mode] value. 22 = P60 [Lock Mon In Type] value not legal based on P21 [Safety Mode] value and P59 [Lock Mon Enable] value. 23 = Illegal P20 [Cascaded Config] value. 24 = Illegal P22 [Reset Type] value. 25 = Reserved 26 = Illegal P45 [Safe Stop Type] value. 27 = Illegal P51 [Stop Decel Tol] value. 28 = Illegal P27 [Fbk Mode] value. 29 = Illegal P28 [Fbk 1 Type] value. 30 = Illegal P31 [Fbk 1 Resolution] value. 31 = Illegal P32 [Fbk1 Volt Mon] value. 32 = Illegal P37 [Fbk 2 Volt Mon] value. 33 = Illegal P24 [OverSpd Response] value. 34 = Reserved 36 = Unknown Error (Unknown Err).	Default: Options:	NA 0…36	RO	8-bit Integer

File	Group	No.	Display Name Full Name Description	Values		Read-Write	Data Type
Safe Speed Monitor	General	**20**	**Cascaded Config** Cascaded Configuration Defines whether the speed monitoring safety option is a single unit or if it occupies a first, middle, or last position in a multi-axis cascaded system. "Single" (0) - Single Unit System "Milti First" (1) - Cascaded System First Unit "Multi Mid" (2) - Cascaded System Middle Unit "Multi Last" (3) - Cascaded System Last Unit	Default: Options:	0 = "Single" 0 = "Single" 1 = "Multi First" 2 = "Multi Mid" 3 = "Multi Last"	RW	8-bit Integer
		21	**Safety Mode** Safety Mode Defines the primary operating mode of the speed monitoring safety functions. "Safe Stop" (1) - Master, Safe Stop "Safe Stop DM" (2) - Master, Safe Stop with Door Monitoring "Lim Speed" (3) - Master, Safe Limited Speed "Lim Speed DM" (4) -Master, Safe Limited Speed with Door Monitoring "Lim Speed ES" (5) - Master, Safe Limited Speed with Enabling Switch Control "LimSpd DM ES" (6) - Master, Safe Limited Speed with Door Monitoring and Enabling Switch Control "Lim Spd Stat" (7) - Master, Safe Limited Speed Status Only "Slv Safe Stp" (8) - Slave, Safe Stop "Slv Lim Spd" (9) - Slave, Safe Limited Speed "Slv Spd Stat" (10) - Slave, Safe Limited Speed Status Only	Default: Options:	1 = "Safe Stop" 0 = "Disable" 1 = "Safe Stop" 2 = "Safe Stop DM" 3 = "Lim Speed" 4 = "Lim Speed DM" 5 = "Lim Speed ES" 6 = "LimSpd DM ES" 7 = "Lim Spd Stat" 8 = "Slv Safe Stp" 9 = "Slv Lim Spd" 10 = "Slv Spd Stat"	RW	8-bit Integer
		22	**Reset Type** Reset Type Defines the type of reset used by the safety option.	Default: Options:	2 = "Monitored" 0 = "Automatic" 1 = "Manual" 2 = "Monitored" (Manual Monitored)	RW	8-bit Integer
		24	**OverSpd Response** Over Speed Response Configuration for the feedback interface sampling rate.	Default: Options:	0 = "42 msec" 0 = "42 msec" 1 = "48 msec" 2 = "60 msec" 3 = "84 msec" 4 = "132 msec" 5 = "228 msec" 6 = "420 msec"	RW	8-bit Integer
		72	**SS Out Mode** Defines whether the SS_Out output is pulse-tested. If pulse-testing is turned off for any output, the SIL, Category, and PL rating is reduced for the entire safety system.	Default: Options:	0 = "Pulse Test" 0 = "Pulse Test" 1 = "No Pulse Tst"	RW	8-bit Integer
		73	**SLS Out Mode** Defines whether the SLS_Out output is pulse-tested. If pulse-testing is turned off for any output, the SIL, Category, and PL rating is reduced for the entire safety system.	Default: Options:	0 = "Pulse Test" 0 = "Pulse Test" 1 = "No Pulse Tst"	RW	8-bit Integer

File	Group	No.	Display Name Full Name Description	Values		Read-Write	Data Type
Safe Speed Monitor	Feedback	27	**Fbk Mode** Feedback Mode Selects the number of feedback devices and the type of discrepancy checking. "Single Fbk" (0) - 1 Encoder "Dual S/P Chk" (1) - 2 Encoders with Speed and Position Discrepancy Checking "Dual Spd Chk" (2) - 2 Encoders with Speed Discrepancy Checking "Dual Pos Chk" (3) - 2 Encoders with Position Discrepancy Checking	Default: Options:	0 = "Single Fbk" 0 = "Single Fbk" 1 = "Dual S/P Chk" 2 = "Dual Spd Chk" 3 = "Dual Pos Chk"	RW	8-bit Integer
		28	**Fbk 1 Type** Feedback 1 Type Selects the type of feedback for encoder 1. When using the Safe Speed Monitor module with a 20-750-UFB-1 Universal Feedback module, set this parameter to 0 "Sine/Cosine" and ensure that the Universal Feedback module is set to a Sine/Cosine type device (P6 [FB0 Device Sel] and/or P36 [FB1 Device Sel]).	Default: Options:	1 = "Incremental" 0 = "Sine/Cosine" 1 = "Incremental"	RW	8-bit Integer
		29	**Fbk 1 Units** Feedback 1 Units Selects rotary or linear feedback for encoder 1.	Default: Options:	0 = "Rev" 0 = "Rev" (Rotary) 1 = "mm" (Linear)	RW	8-bit Integer
		30	**Fbk 1 Polarity** Feedback 1 Polarity Defines the direction polarity for encoder 1.	Default: Options:	0 = "Normal" 0 = "Normal" (Same as encoder) 1 = "Reversed"	RW	8-bit Integer
		31	**Fbk 1 Resolution** Feedback 1 Resolution Counts/Revolution. 1…65,535 pulses/revolution or pulses/mm based on rotary or linear configuration defined by P29 [Fbk 1 Units].	Default: Min/Max:	1024 1 / 65535	RO	16-bit Integer
		32	**Fbk 1 Volt Mon** Feedback 1 Voltage Monitor Encoder 1 voltage to be monitored.	Default: Options:	0 = Voltage not monitored 0 = Voltage not monitored 5 = 5V +/- 5% 9 = 7…12V 12 = 12V +/- 5% 24 = 24V - 10%…24V + 5%	RW	8-bit Integer
		33	**Fbk 1 Speed** Feedback 1 Speed Displays the output speed of encoder 1. Units based on rotary or linear configuration defined by P29 [Fbk 1 Units].	Units: Min/Max:	RPM mm/s -214748364.8 / 214748364.7 RPM -214748364.8 / 214748364.7mm/s	RO	32-bit Integer
		34	**Fbk 2 Units** Feedback 2 Units Selects rotary or linear feedback for encoder 2.	Default: Options:	0 = "Rev" 0 = "Rev" (Rotary) 1 = "mm" (Linear)	RW	8-bit Integer
		35	**Fbk 2 Polarity** Feedback 2 Polarity Defines the direction polarity for encoder 2.	Default: Options:	0 = "Normal" 0 = "Normal" (Same as encoder) 1 = "Reversed"	RW	8-bit Integer
		36	**Fbk 2 Resolution** Feedback 2 Resolution Counts/Revolution. 0…65,535 pulses/revolution or pulses/mm based on rotary or linear configuration defined by P34 [Fbk 2 Units].	Default: Min/Max:	0 0 / 65535	RW	16-bit Integer

File	Group	No.	Display Name Full Name Description	Values		Read-Write	Data Type
Safe Speed Monitor	Feedback	**37**	**Fbk 2 Volt Mon** Feedback 2 Voltage Monitor Encoder 2 voltage to be monitored.	Default: Options:	0 = Voltage not monitored 0 = Voltage not monitored 5 = 5V +/- 5% 9 = 7…12V 12 = 12V +/- 5% 24 = 24V - 10%…24V + 5%	RW	8-bit Integer
		38	**Fbk 2 Speed** Feedback 2 Speed Displays the output speed of encoder 2. Units based on rotary or linear configuration defined by P34 [Fbk 2 Units].	Units: Min/Max:	RPM mm/s -214748364.8/214748364.7 RPM -214748364.8/214748364.7 mm/s	RO	32-bit Integer
		39	**Fbk Speed Ratio** Feedback Speed Ratio Defines the ratio of the expected speed of encoder 2 divided by the expected speed of encoder 1. Ratio based on rotary or linear configuration defined by P29 [Fbk 1 Units].	Default: Min/Max:	0.0000 0.0000 / 10000.0	RW	Real
		40	**Fbk Speed Tol** Feedback Speed Tolerance Acceptable difference in speed between P33 [Fbk 1 Speed] and P38 [Fbk 2 Speed]. Units are based on rotary or linear configuration defined by P29 [Fbk 1 Units].	Units: Min/Max:	RPM mm/s 0 / 6553.5 RPM 0 / 6553.5 mm/s	RW	16-bit Integer
		41	**Fbk Pos Tol** Feedback Position Tolerance Acceptable difference in position between encoder 1 and encoder 2. Units are based on rotary or linear configuration defined by P29 [Fbk 1 Units].	Units: Default: Min/Max:	Deg mm 0 0 / 65535 deg 0 / 65535 mm	RW	16-bit Integer
		42	**Direction Mon** Direction Monitoring Defines the allowable direction if Safe Direction Monitoring is enabled. “Pos Always” (1) – Positive always “Neg Always” (2) – Negative always “Pos in SLS” (3) – Positive during safe limited speed monitoring “Neg in SLS” (4) – Negative during safe limited speed monitoring	Default: Options:	0 = “Disable” 0 = “Disable” 1 = “Pos Always” 2 = “Neg Always” 3 = “Pos in SLS” 4 = “Neg in SLS”	RW	8-bit Integer
		43	**Direction Tol** Direction Tolerance The position limit in encoder units tolerated in the wrong direction when Safe Direction Monitoring is active. Units are based on rotary or linear configuration defined by P29 [Fbk 1 Units].	Units: Default: Min/Max:	Deg mm 10 0 / 65535 deg 0 / 65535 mm	RW	16-bit Integer

File	Group	No.	Display Name Full Name Description	Values		Read-Write	Data Type
Safe Speed Monitor	Stop	44	**Safe Stop Input** Safe Stop Input Configuration for Safe Stop input (SS_In). "2NC" (1) – Dual-channel equivalent "2NC 3s" (2) – Dual-channel equivalent 3 s "1NC+1NO" (3) – Dual-channel complementary "1NC+1NO 3s" (4) – Dual-channel complementary 3 s "2 OSSD 3s" (5) – Dual-channel SS equivalent 3 s "1NC" (6) – Single channel equivalent	Default: Options:	1 = "2NC" 0 = "Not Used" 1 = "2NC" 2 = "2NC 3s" 3 = "1NC+1NO" 4 = "1NC+1NO 3s" 5 = "2 OSSD 3s" 6 = "1NC"	RW	8-bit Integer
		45	**Safe Stop Type** Safe Stop Type Safe operating stop type selection. This defines the type of Safe Stop that is performed if the Safe Stop function is initiated by a stop type condition. "Torque Off" (0) – Safe Torque Off With Standstill Checking "Torque Off NoCk" (3) – Safe Torque Off Without Standstill Checking	Default: Options:	0 = "Torque Off" 0 = "Torque Off" 1 = "Safe Stop 1" 2 = "Safe Stop 2" 3 = "Torque Off NoCk"	RW	8-bit Integer
		46	**Stop Mon Delay** Stop Monitoring Delay Defines the monitoring delay between the request and the Max Stop Time when the request for a Safe Stop 1 or a Safe Stop 2 is initiated by an SS_In input ON to OFF transition. If the Safe Stop Type is Safe Torque Off With or Without Standstill Speed Checking, the Stop Monitor Delay must be 0 or a Invalid Configuration Fault occurs.	Units: Default: Min/Max:	Secs 0 0 / 6553.5	RW	16-bit Integer
		47	**Max Stop Time** Maximum Stop Time Defines the maximum stop delay time that is used when the Safe Stop function is initiated by a stop type condition.	Units: Default: Min/Max:	Secs 0 0 / 6553.5	RW	16-bit Integer
		48	**Standstill Speed** Standstill Speed Defines the speed limit that is used to declare motion as stopped. Units are based on rotary or linear configuration defined by P29 [Fbk 1 Units]. Not valid for Safe Torque Off without Standstill Checking.	Units: Default: Min/Max:	RPM mm/s 0.001 0.001/ 65535 RPM 000/ 65535 mm/s	RW	16-bit Integer
		49	**Standstill Pos** Standstill Position Defines the position limit window in encoder 1 degrees or mm that will be tolerated after a safe stop condition has been detected. Degrees (360° = 1 revolution) or mm based on rotary or linear configuration defined by P29 [Fbk 1 Units]. Not valid for Safe Torque Off without Standstill Checking.	Units: Default: Min/Max:	Deg mm 10 0 / 65.535 deg 0 / 65.535 mm	RW	16-bit Integer
		50	**Decel Ref Speed** Deceleration Reference Speed Determines deceleration rate to monitor for Safe Stop 1 or Safe Stop 2. Units are based on rotary or linear configuration defined by encoder 1 feedback configuration, P29 [Fbk 1 Units].	Units: Default: Min/Max:	RPM mm/s 0 0 / 65535 RPM 0 / 65535 mm/s	RW	16-bit Integer
		51	**Stop Decel Tol** Stop Deceleration Tolerance This is the acceptable tolerance above the deceleration rate set by the Decel Ref Speed parameter.	Units: Default: Min/Max:	% 0 0 / 100	RW	8-bit Integer

File	Group	No.	Display Name Full Name Description	Values		Read-Write	Data Type
Safe Speed Monitor	Limited Speed	52	**Lim Speed Input** Limited Speed Input Configuration for Safe Limited Speed input (SLS_In). "2NC" (1) – Dual-channel equivalent "2NC 3s" (2) – Dual-channel equivalent 3 s "1NC+1NO" (3) – Dual-channel complementary "1NC+1NO 3s" (4) – Dual-channel complementary 3 s "2 OSSD 3s" (5) – Dual-channel SS equivalent 3 s "1NC" (6) – Single channel equivalent	Default: Options:	0 = "Not Used" 0 = "Not Used" 1 = "2NC" 2 = "2NC 3s" 3 = "1NC+1NO" 4 = "1NC+1NO 3s" 5 = "2 OSSD 3s" 6 = "1NC"	RW	8-bit Integer
		53	**LimSpd Mon Delay** Limited Speed Monitoring Delay Defines the Safe Limited Speed Monitoring Delay between the SLS_In ON to OFF transition and the initiation of the Safe Limited Speed (SLS) or Safe Maximum Speed (SMS) monitoring.	Units: Default: Min/Max:	Secs 0 0 / 6553.5	RW	16-bit Integer
		54	**Enable SW Input** Enable Switch Input Configuration for the Enabling Switch input (ESM_In). "2NC" (1) – Dual-channel equivalent "2NC 3s" (2) – Dual-channel equivalent 3 s "1NC+1NO" (3) – Dual-channel complementary "1NC+1NO 3s" (4) – Dual-channel complementary 3 s "2 OSSD 3s" (5) – Dual-channel SS equivalent 3 s "1NC" (6) – Single channel equivalent	Default: Options:	0 = "Not Used" 0 = "Not Used" 1 = "2NC" 2 = "2NC 3s" 3 = "1NC+1NO" 4 = "1NC+1NO 3s" 5 = "2 OSSD 3s" 6 = "1NC"	RW	8-bit Integer
		55	**Safe Speed Limit** Safe Speed Limit Defines the speed limit that will be monitored in Safe Limited Speed (SLS) mode. Units are based on rotary or linear configuration defined by P29 [Fbk 1 Units].	Units: Default: Min/Max:	RPM mm/s 0 0 / 6553.5 RPM 0 / 6553.5 mm/s	RW	16-bit Integer
		56	**Speed Hysteresis** Speed Hysteresis Provides hysteresis for SLS_Out output when Safe Limited Speed monitoring is active. 0% when P21 [Safety Mode] = 1, 2, 3, 4, 5, 6, 8, or 9 10…100% when P21 [Safety Mode] = 7 or 10	Units: Default: Min/Max:	% 0 0 / 100	RW	8-bit Integer

File	Group	No.	Display Name Full Name Description	Values		Read-Write	Data Type
Safe Speed Monitor	Door Control	57	**Door Out Type** Door Output Type Defines the lock and unlock state for door control output (DC_Out). When Door Out Type equals power to release, DC_Out is OFF in the lock state and ON in the unlock state. When Door Out Type equals power to lock, DC_Out is ON in the lock state and OFF in the unlock state. The first and middle units of a multi-axis system must be configured as cascading (2).	Default: Options:	0 = "Pwr to Rel" 0 = "Pwr to Rel" 1 = "Pwr to Lock" 2 = "2 Ch Sourcing"	RW	8-bit Integer
		58	**DM Input** Door Monitor Input Configuration for the Door Monitor input (DM_In). "2NC" (1) – Dual-channel equivalent "2NC 3s" (2) – Dual-channel equivalent 3 s "1NC+1NO" (3) – Dual-channel complementary "1NC+1NO 3s" (4) – Dual-channel complementary 3 s "2 OSSD 3s" (5) – Dual-channel SS equivalent 3 s "1NC" (6) – Single channel equivalent	Default: Options:	0 = "Not Used" 0 = "Not Used" 1 = "2NC" 2 = "2NC 3s" 3 = "1NC+1NO" 4 = "1NC+1NO 3s" 5 = "2 OSSD 3s" 6 = "1NC"	RW	8-bit Integer
		59	**Lock Mon Enable** Lock Monitor Enable Lock Monitoring can only be enabled when the speed monitoring safety option is a single unit or as the first unit in a multi-axis system (P20 [Cascaded Config] = 0 or 1).	Default: Options:	0 = "Disable" 0 = "Disable" 1 = "Enable"	RW	8-bit Integer
		60	**Lock Mon Input** Lock Monitor Input Configuration for the Lock Monitor input (LM_In). "2NC" (1) – Dual-channel equivalent "2NC 3s" (2) – Dual-channel equivalent 3 s "1NC+1NO" (3) – Dual-channel complementary "1NC+1NO 3s" (4) – Dual-channel complementary 3 s "2 OSSD 3s" (5) – Dual-channel SS equivalent 3 s "1NC" (6) – Single channel equivalent	Default: Options:	0 = "Not Used" 0 = "Not Used" 1 = "2NC" 2 = "2NC 3s" 3 = "1NC+1NO" 4 = "1NC+1NO 3s" 5 = "2 OSSD 3s" 6 = "1NC"	RW	8-bit Integer
		74	**Door Out Mode** Door Output Mode Defines whether the DC_Out output is pulse-tested. If pulse-testing is turned off for any output, the SIL, Category, and PL rating is reduced for the entire safety system.	Default: Options:	0 = "Pulse Test" 0 = "Pulse Test" 1 = "No Pulse Tst"	RW	8-bit Integer

File	Group	No.	Display Name Full Name Description	Values		Read-Write	Data Type
Safe Speed Monitor	Max Speed	61	**Max Speed Enable** Maximum Speed Enable Enable Safe Maximum Speed Monitoring.	Default: Options:	0 = "Disable" 0 = "Disable" 1 = "Enable"	RW	8-bit Integer
		62	**Safe Max Speed** Safe Maximum Speed Defines the maximum speed limit that will be tolerated if Safe Maximum Speed monitoring is enabled.	Units: Default: Min/Max:	RPM mm/s 0 0 / 65535 RPM 0 / 65535 mm/s	RW	16-bit Integer
		63	**Max Spd Stop Typ** Maximum Speed Stop Type Defines the safe stop type that will be initiated in the event of a SMS Speed Fault. "Torque Off" (0) – Safe Torque Off With Standstill Checking "Safe Stp Typ" (1) – Safe Torque Off Without Standstill Checking	Default: Options:	0 = "Torque Off" 0 = "Torque Off" 1 = "Safe Stp Typ"	RW	8-bit Integer
		64	**Max Accel Enable** Maximum Acceleration Enable Enable Safe Maximum Acceleration Monitoring.	Default: Options:	0 = "Disable" 0 = "Disable" 1 = "Enable"	RW	8-bit Integer
		65	**Safe Accel Limit** Safe Acceleration Limit Defines the Safe Maximum Acceleration Limit, relative to encoder 1, for which the system is being monitored. Units are based on rotary or linear configuration defined by P29 [Fbk 1 Units].	Units: Default: Min/Max:	Rev/s^2 mm/s^2 0 0 / 65535 rev/s^2 0 / 65535 mm/s^2	RW	16-bit Integer
		66	**Max Acc Stop Typ** Maximum Acceleration Stop Type Defines the safe stop type that will be initiated in the event of an Acceleration Fault. "Torque Off" (0) – Safe Torque Off With Standstill Checking "Safe Stp Typ" (1) – Safe Torque Off Without Standstill Checking	Default: Options:	0 = "Torque Off" 0 = "Torque Off" 1 = "Safe Stp Typ"	RW	8-bit Integer

File	Group	No.	Display Name Full Name Description	Values	Read-Write	Data Type
Safe Speed Monitor	Faults	67	**Fault Status** Fault Status Bit-encoded faults.		RO	32-bit Integer

Options	Reserved	Reserved	Reserved	Fbk 2 V Flt	Fbk 1 V Flt	ESM Mon Flt	ESM In Flt	Lock Mon Flt	LM In Flt	DC Out Flt	Door Mon Flt	DM In Flt	Dir Flt	Accel Flt	SMS Spd Flt	SLS Spd Flt	SLS Out Flt	SLS In Flt	Mov in Stop	Stop Spd Flt	Decel Flt	SS Out Flt	SS In Flt	Dual Fbk Pos	Dual Fbk Spd	Fbk 2 Flt	Fbk 1 Flt	Reset PwrUp	MP Out Flt	Invalid Cfg	Critical Flt	Combined Flt
Default	0	0	0	0	0	0	0	0	0	0	0	0	0	0	0	0	0	0	0	0	0	0	0	0	0	0	0	0	0	0	0	0
Bit	31	30	29	28	27	26	25	24	23	22	21	20	19	18	17	16	15	14	13	12	11	10	9	8	7	6	5	4	3	2	1	0

Bit 0 “Combined Flt” – Combined Fault Status
Bit 1 “Critical Flt” – Critical Fault
Bit 2 “Invalid Cfg” – Invalid Configuration Fault
Bit 3 “MP Out Flt” – MP Out Fault
Bit 4 “Reset PwrUp” – Reset On at PwrUp Fault
Bit 5 “Fbk 1 Flt” – Feedback 1 Fault
Bit 6 “Fbk 2 Flt” – Feedback 2 Fault
Bit 7 “Dual Fbk Spd” – Dual FB Speed Fault
Bit 8 “Dual Fbk Pos” – Dual FB Position Fault
Bit 9 “SS In Flt” – SS_In Fault
Bit 10 “SS Out Flt” – SS_Out Fault
Bit 11 “Decel Flt” – Deceleration Fault
Bit 12 “Stop Spd Flt” – Stop Speed Fault
Bit 13 “Mov in Stop” – Motion After Stopped Fault
Bit 14 “SLS In Flt” – SLS_In Fault
Bit 15 “SLS Out Flt” – SLS_Out Fault
Bit 16 “SLS Spd Flt” – SLS_Speed Fault
Bit 17 “SMS Spd Flt” – SMS_Speed Fault
Bit 18 “Accel Flt” – Acceleration Fault
Bit 19 “Dir Flt” – Direction Fault
Bit 20 “DM In Flt” – DM_In Fault
Bit 21 “Door Mon Flt” – Door Monitoring Fault
Bit 22 “DC Out Flt” – DC_Out Fault
Bit 23 “LM In Flt” – LM_In Fault
Bit 24 “Lock Mon Flt” – Lock Monitoring Fault
Bit 25 “ESM In Flt” – ESM_In Fault
Bit 26 “ESM Mon Flt” – ESM Monitoring Fault
Bit 27 “Fbk 1 V Flt” – Encoder 1 Voltage Fault
Bit 28 “Fbk 2 V Flt” – Encoder 2 Voltage Fault

File	Group	No.	Display Name Full Name Description	Values	Read-Write	Data Type
Safe Speed Monitor	Faults	68	**Guard Status** Guard Status Indicates the state of the safety functions while in Run mode.		RO	32-bit Integer

Options	Reserved	Reserved	Reserved	Stop Cmd	SLS Cmd	Wait No Stop	Wait SS Cyc	Wait Reset	Reset In	ESM In Prog	ESM In	LM In	DM In Prog	DM In	DC Out	DC Lock	SDM In Prog	SMA In Prog	SMS In Prog	SLS Out	SLS In Prog	SLS Req	SLS In	SS Out	SS Stopped	SS Decel	SS In Prog	SS Req	SS In	MP Out	Config Lock	StatusOK
Default	0	0	0	0	0	0	0	0	0	0	0	0	0	0	0	0	0	0	0	0	0	0	0	0	0	0	0	0	0	0	0	0
Bit	31	30	29	28	27	26	25	24	23	22	21	20	19	18	17	16	15	14	13	12	11	10	9	8	7	6	5	4	3	2	1	0

Bit 0 “Status OK” – 0 = Fault; 1 = OK
Bit 1 “Config Lock” – Configuration_Lock: 0 = Unlock; 1 = Lock
Bit 2 “MP Out” – MP_Out_Value: 0 = Off; 1 = On
Bit 3 “SS In” – SS_In_Value: 0 = Off; 1 = On
Bit 4 “SS Req” – SS_Request_Status: 0 = Inactive; 1 = Active
Bit 5 “SS In Prog” – SS_In_Progress: 0 = Inactive; 1 = Active
Bit 6 “SS Decel” – SS_Decelerating_Status: 0 = Inactive; 1 = Active
Bit 7 “SS Stopped” – SS_Axis_Stopped_Status: 0 = Inactive; 1 = Active
Bit 8 “SS Out” – SS_Output_Value: 0 = Off; 1 = On
Bit 9 “SLS In” – SLS_In_Value: 0 = Off; 1 = On
Bit 10 “SLS Req” – SLS_Request_Status: 0 = Inactive; 1 = Active
Bit 11 “SLS In Prog” – SLS_In_Progress: 0 = Inactive; 1 = Active
Bit 12 “SLS Out” – SLS_Output_Value: 0 = Off; 1 = On
Bit 13 “SMS In Prog” – SMS_In_Progress: 0 = Inactive; 1 = Active
Bit 14 “SMA In Prog” – SMA_In_Progress: 0 = Inactive; 1 = Active
Bit 15 “SDM In Prog” – SDM_In_Progress: 0 = Inactive; 1 = Active
Bit 16 “DC Lock” – DC_Lock_Status: 0 = Lock; 1 = Unlock
Bit 17 “DC Out” – DC_Out_Value: 0 = Off; 1 = On
Bit 18 “DM In” – DM_In_Value: 0 = Off; 1 = On
Bit 19 “DM In Prog” – DM_In_Progress: 0 = Inactive; 1 = Active
Bit 20 “LM In” – LM_In_Value: 0 = Off; 1 = On
Bit 21 “ESM In” – ESM_In_Value: 0 = Off; 1 = On
Bit 22 “ESM In Prog” – ESM_In_Progress: 0 = Inactive; 1 = Active
Bit 23 “Reset In” – Reset_In_Value: 0 = Off; 1 = On
Bit 24 “Wait Reset” – Waiting_for_SS_Reset: 0 = Inactive; 1 = Active
Bit 25 “Wait SS Cyc” – Waiting_for_Cycle_SS_In: 0 = Inactive; 1 = Active
Bit 26 “Wait No Stop” – Waiting_for_Stop_Request_Removal: 0 = Inactive; 1 = Active
Bit 27 “SLS Cmd” – SLS_Command: 0 = Off; 1 = On
Bit 28 “Stop Cmd” – Stop_Command: 0 = Off; 1 = On

File	Group	No.	Display Name Full Name Description	Values	Read-Write	Data Type
Safe Speed Monitor	Faults	**69**	**IO Diag Status** I/O Diagnostics Status Indicates present state of I/O used for diagnostics. **Important:** When the safety option is not in the Run mode, this parameter is not updated.		RO	32-bit Integer

Options	Reserved	Reserved	Reserved	Reserved	Reserved	Reserved	Reserved	Reserved	Reserved	Reserved	MP Out Ch 1	MP Out Ch 0	Stop Cmd	SLS Cmd	Reserved	Reset In	LM In Ch 1	LM In Ch 0	DC Out Ch 1	DC Out Ch 0	DM In Ch 1	DM In Ch 0	ESM In Ch 1	ESM In Ch 0	SLS Out Ch 1	SLS Out Ch 0	SLS In Ch 1	SLS In Ch 0	SS Out Ch 1	SS Out Ch 0	SS In Ch 1	SS In Ch 0
Default	0	0	0	0	0	0	0	0	0	0	0	0	0	0	0	0	0	0	0	0	0	0	0	0	0	0	0	0	0	0	0	0
Bit	31	30	29	28	27	26	25	24	23	22	21	20	19	18	17	16	15	14	13	12	11	10	9	8	7	6	5	4	3	2	1	0

0 = Open
1 = Closed

Bit 0 “SS In Ch 0” – SS_in_ch_0 status
Bit 1 “SS In Ch 1” – SS_in_ch_1 status
Bit 2 “SS Out Ch 0” – SS_out_ch_0 status
Bit 3 “SS Out Ch 1” – SS_out_ch_1 status
Bit 4 “SLS In Ch 0” – SLS_in_ch_0 status
Bit 5 “SLS In Ch 1” – SLS_in_ch_1 status
Bit 6 “SLS Out Ch 0” – SLS_out_ch_0 status
Bit 7 “SLS Out Ch 1” – SLS_out_ch_1 status
Bit 8 “ESM In Ch 0” – ESM_in_ch_0 status
Bit 9 “ESM In Ch 1” – ESM_in_ch_1 status
Bit 10 “DM In Ch 0” – DM_in_ch_0 status
Bit 11 “DM In Ch 1” – DM_in_ch_1 status
Bit 12 “DC Out Ch 0” – DC_out_ch_0 status
Bit 13 “DC Out Ch 1” – DC_out_ch_1 status
Bit 14 “LM In Ch 0” – LM_in_ch_0 status
Bit 15 “LM In Ch 1” – LM_in_ch_1 status
Bit 16 “Reset In” – Reset_In status
Bit 17 “Reserved”
Bit 18 “SLS Cmd” – SLS_command status
Bit 19 “Stop Cmd” – Stop_command status
Bit 20 “MP Out Ch 0” – MP_Out_Ch_0 status
Bit 21 “MP Out Ch 1” – MP_Out_Ch_1 status

		70	See page 300.
		72	See page 301.
		73	See page 301.
		74	See page 306.

Troubleshooting

This chapter provides information to guide you through troubleshooting PowerFlex® 750-Series faults and alarms.

Topic	Page
Faults, Alarms, and Configurable Conditions	311
Drive Status Indicators	314
HIM Indication	316
Manually Clearing Faults	316
Power Layer Interface (PLI) Board 7-Segment Display	317
Setting Factory Defaults	318
System Resource Allocation	318
Hardware Service Manual	319
Integrated Motion Applications	319
Fault and Alarm Display Codes	319
Parameter Access Level	319
Drive Fault and Alarm Descriptions	320
Inverter (Port 10) Faults and Alarms (Frame 8 and Larger)	340
Converter (Port 11) Faults and Alarms (Frame 8 and Larger)	345
Precharge (Port 11) Faults and Alarms (Frame 8 and Larger)	350
N-1 and Re-Rate Functions	353
Embedded EtherNet/IP (Port 13) Events	357
I/O Faults and Alarms	359
Safe Torque Off Fault	359
Single Incremental Encoder Faults and Alarms	360
Dual Incremental Encoder Faults and Alarms	361
Universal Feedback Faults and Alarms	362
Port Verification	369
Common Symptoms and Corrective Actions	369
PowerFlex 755 Lifting/Torque Proving	372
External Brake Resistor	372
Technical Support Options	373

Faults, Alarms, and Configurable Conditions

Faults

A fault identifies a condition that stops the drive. Faults are classified in two ways: Major/Minor and Auto Reset Run/Resettable/Non-Resettable/Automatic Drive Reset.

Type	Description
Major	This type of fault in an exception event that stops the drive while the drive is active. The drive goes to the Not Ready state. No faults can be present for the drive to be in the Ready state.
Minor	This type of fault is an exception event that does not stop the drive while the drive is active. To enable the drive from the Drive Not Ready state to the Ready state, the exception must no longer be present and the fault must be cleared.
Auto Reset Run (Auto Restart)	A "Y" in the "Auto Reset" column in Table 10 identifies a fault where "Auto Reset Run" (Auto Restart) can be attempted. The drive must be **active**, in a **running** state when the fault occurs. If P348 [Auto Rstrt Tries] is set to a value greater than "0," a user-configurable timer, P349 [Auto Rstrt Delay] begins. When the timer reaches zero, the drive attempts to reset the fault automatically. If the condition that caused the fault is no longer present, the fault is reset and the drive **is restarted**. This feature is also applicable to some fault types in Table 12, Table 13,Table 14, and Table 18.
Auto Clear	A "Y" in the "Auto Clear" column in Table 10 identifies a fault where "Auto Clear" can be attempted when the drive is stopped. The drive must be **inactive**, in a **stopped** state, when the fault occurs. If P338 [AutoClrFlt Tries] is set to a value greater than 0, a user-configurable timer, P339 [AutoClrFlt Delay] begins. When the timer reaches zero the drive attempts to reset the fault automatically. If the faults are successfully reset and the condition which caused the fault is no longer present then the drive is ready to run again, **but does not restart automatically**. This feature is also applicable to some fault types in Table 12, Table 13, Table 14 and Table 18.
Resettable	This type of fault can be cleared. "Resettable Fault" in the "Type" column in Table 10 identifies a Resettable fault.
Non-Resettable	This type of fault normally requires drive or motor repair. The cause of the fault must be corrected before the fault can be cleared. The fault will be reset on power-up after repair. "Non-Reset Fault" in the "Type" column in Table 10 identifies a Non-Resettable fault.
Automatic Drive Reset	When this type of fault occurs, the drive resets. "Automatic Drive Reset" in the "Type" column in Table 10 identifies an Automatic Drive Reset fault.

Alarms

An alarm identifies a condition that, if left unaddressed, can stop the drive if running or prevent the drive from starting. There are two types of alarms.

Type	Description
Alarm 1	Alarms of type 1 indicate that a condition exists. Type 1 alarms are configurable.
Alarm 2	Alarms of type 2 indicate that a configuration error exists and the drive cannot be started. Type 2 alarms are non-configurable.

Configurable Conditions

Configurable conditions can be enabled as an alarm or fault.

Type	Description
Configurable	The parameter identified in the "Configuration Parameter" column of Table 10 on page 320 enables/disables the event action. **Options** Ignore (0) – No action is taken. Alarm (1) – Type 1 alarm indicated. Flt Minor (2) – Minor fault indicated. If running, drive continues to run. Enable with P950 [Minor Flt Cfg]. If not enabled, acts like a major fault. FltCoastStop (3) – Major fault indicated. Coast to Stop. Flt RampStop (4) – Major fault indicated. Ramp to Stop. Flt CL Stop (5) – Major fault indicated. Current Limit Stop. FltNonRest (6) – Major fault indicated. Cycle power to clear the fault.

View Faults and Alarms

Diagnostic parameters indicate fault and alarm conditions. See the Fault/Alarm Info Group that begins on page 171.

To view fault history access Diagnostics and select Faults or Alarms.

Drive Status Indicators

The condition or state of the drive is constantly monitored and is indicated through the LEDs and/or the HIM (if present).

IMPORTANT The Status Indicator LEDs on the HIM cradle do not indicate the status of an installed Communication Adapter option. If an optional Communication Adapter is installed, refer to the option module user manual for a description of LED location and indication.



Table 6 - PowerFlex 753 Drive Status Indicator Descriptions

Name	Color	State	Description
STS (Status)	Green	Flashing	Drive ready but not running, and no faults are present.
		Steady	Drive running, no faults are present.
	Yellow	Flashing	Drive is not running, a start inhibit condition exists and the drive cannot be started. See parameter 933 [Start Inhibits].
		Steady	A type 1 (configurable) alarm exists. A stopped drive cannot start until the alarm condition is cleared. If the drive is running, it continues to run but cannot restart until the alarm condition is cleared. See parameters 959 [Alarm Status A] and 960 [Alarm Status B].
	Red	Flashing	A major fault has occurred. The drive stops. Drive cannot be started until fault condition is cleared. See parameter 951 [Last Fault Code].
		Steady	A non-resettable fault has occurred.
	Red / Yellow	Flashing Alternately	A minor fault has occurred. When running, the drive continues to run. System is brought to a stop under system control. Fault must be cleared to continue. Use parameter 950 [Minor Flt Cfg] to enable. If not enabled, acts like a major fault.
	Yellow / Green	Flashing Alternately	When running, a type 1 alarm exists. See parameters 959 [Alarm Status A] and 960 [Alarm Status B].
	Green / Red	Flashing Alternately	Drive is flash updating.



Table 7 - PowerFlex 755 Drive Status Indicator Descriptions

Name	Color	State	Description
STS (Status)	Green	Flashing	Drive ready but not running, and no faults are present.
		Steady	Drive running, no faults are present.
	Yellow	Flashing	Drive is not running, a type 2 (non-configurable) alarm condition exists and the drive cannot be started. See parameter 961 [Type 2 Alarms].
		Steady	A type 1 (configurable) alarm exists. A stopped drive cannot start until the alarm condition is cleared. If the drive is running, it continues to run but cannot restart until the alarm condition is cleared. See parameters 959 [Alarm Status A] and 960 [Alarm Status B].
	Red	Flashing	A major fault has occurred. The drive stops. The drive cannot start until the fault condition is cleared. See parameter 951 [Last Fault Code].
		Steady	A non-resettable fault has occurred.
	Red / Yellow	Flashing Alternately	A minor fault has occurred. A running drive continues to run. System is brought to a stop under system control. Fault must be cleared to continue. Use parameter 950 [Minor Flt Cfg] to enable. If not enabled, acts like a major fault.
	Yellow / Green	Flashing Alternately	When running, a type 1 alarm exists. See parameters 959 [Alarm Status A] and 960 [Alarm Status B].
	Green / Red	Flashing Alternately	Drive is flash updating.
ENET	Unlit	Off	Embedded EtherNet/IP is not properly connected to the network or needs an IP address.
	Red	Flashing	An EtherNet/IP connection has timed out.
		Steady	Adapter failed the duplicate IP address detection test.
	Red / Green	Flashing Alternately	Adapter is performing a self-test.
	Green	Flashing	Adapter is properly connected but is not communicating with any devices on the network.
		Steady	Adapter is properly connected and communicating on the network.
LINK	Unlit	Off	Adapter is not powered or is not transmitting on the network.
	Green	Flashing	Adapter is properly connected and transmitting data packets on the network.
		Steady	Adapter is properly connected but is not transmitting on the network.

HIM Indication

Fault Display Screen

The pop-up Fault Display screen automatically appears when a fault condition for the Host Drive or any connected peripheral is detected. The pop-up Fault Display screen flashes to alert that a fault condition exists. This screen displays the:

- Fault Code number (See Fault and Alarm Display Codes on page 319.)
- Fault description
- Elapsed time (in hh:mm:ss format) from fault detection

Figure 3 - Pop-Up/Flashing Fault Display Screen

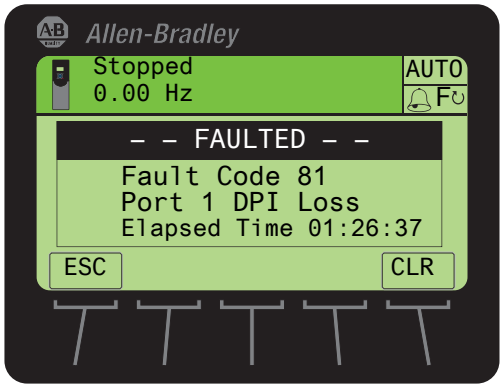

Soft Key Functions

Label	Name	Description
ESC	Escape	Reverts to the previous screen without clearing the fault.
CLR	Clear	Removes the pop-up Fault Display screen from the display and clears the fault.

Single Function Key

Key	Name	Description
	Stop	Removes the pop-up Fault Display screen from the display and clears the fault.

Manually Clearing Faults

Step	Key
1. To acknowledge the fault, press the "Clear" soft key. The fault information is removed so that you can use the HIM. 2. Address the condition that caused the fault. The cause must be corrected before the fault can be cleared. 3. After corrective action has been taken, clear the fault by one of these methods: Press Stop (if running the drive stops) Cycle drive power Select the "Clear" soft key on the HIM Diagnostic folder Faults menu.	

Power Layer Interface (PLI) Board 7-Segment Display

PowerFlex 755 Frame 8 and larger drives provide a pair of 7-segment displays to indicate drive status and conditions.

Series A Display

Lit Segment	Indication	Description
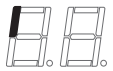	Fault Clear	Indicates that a fault condition has been cleared.
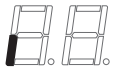	Fault	Indicates that a fault condition exists.
	Power On	Indicates that power is applied to the PLI board.
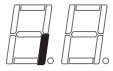	Charged	Indicates the state of the pre-charge pin.
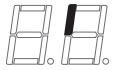	PWM Enable	IGBT gating is enabled. When disabled, all IGBT signal inputs to the PLI IGBT driver chip are low. IGBT gating is enabled by setting bit 0 of the Config Register. IGBT gating is disabled by clearing bit 0 or by "POE" fault (IOC, Bus Overvoltage, or Ground Fault).
	Fiber Loss Fault	Turns on when a Fiber Loss fault occurs. A Fiber Loss fault occurs when the LOS signal is high or when a valid data packet has not been received for 1024 µs. The fault is latched and is cleared by setting bit 8 of the Config Register. The Fiber Loss fault inhibits IGBT firing in the same manner as a "POE" fault.
	Fiber Loss Pin	Indicates that the actual state of the LOS pin described in Write Enable.
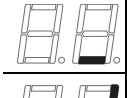	SAFE Vcc Power On	Power is applied to the PLI IGBT driver chip (U14). Delayed for 12 seconds after power-up.
	Write Enable	Data writes from the fiber-optic link are enabled to PLI registers. Data writes are disabled for ten seconds (time that is required for the Control Board to initialize) after negation of the LOS pin of the PLI fiber-optic transceiver. LOS is driven high when the optical power into the fiber-optic receiver is too low (broken, crimped, disconnected fiber, or transmitter at opposite end of fiber is not operating.

Series B Display

Lit Segment	Indication	Description
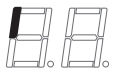	PWM Enable	IGBT gating is enabled. IGBT gating is enabled by setting bit 0 of the Config Register. IGBT gating is disabled by clearing bit 0 or by fault.
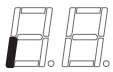	Fault	Indicates that a fault condition exists.
	Initialization Done	Indicates that the control has initialized the PLI board.
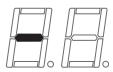	Fiber Loss	Actual state of the LOS pin. LOS is driven high when the optical power into the fiber-optic receiver is too low (broken, crimped, disconnected fiber, or transmitter at opposite end of fiber is not operating.
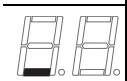	On Line	The PLI is powered.
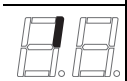	System Safety Enable B	Pin 1 of the 541 PLI IGBT driver chip (U14) is low. This pin must be low to fire the IGBTs.
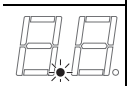	Aux Power	A 24V auxiliary supply provide power for the PLI board.

Setting Factory Defaults

The PowerFlex 20-HIM-A6 / -C6S HIM User Manual, publication 20HIM-UM001, provides detailed Human Interface Module (HIM) use instructions and explains the HIM capabilities, including setting PowerFlex 750-Series drive to factory settings.

The following parameters are not reset when Set Defaults "Most" is executed: P300 [Speed Units], P301 [Access Level], P302 [Language], P305 [Voltage Class], P306 [Duty Rating], P471 [PredMaint Rst En], and P472 [PredMaint Reset].

System Resource Allocation

Each option that is installed in the drive requires a percentage of the available system resources. Some options configurations can exceed the available resources of the main control board processor. If 90 % of the available system resources is reached, an F19 Task Overrun alarm results, which indicates that system resource utilization is excessive.

Table 8 - System Resource Allocation - Drive Frames 1…7

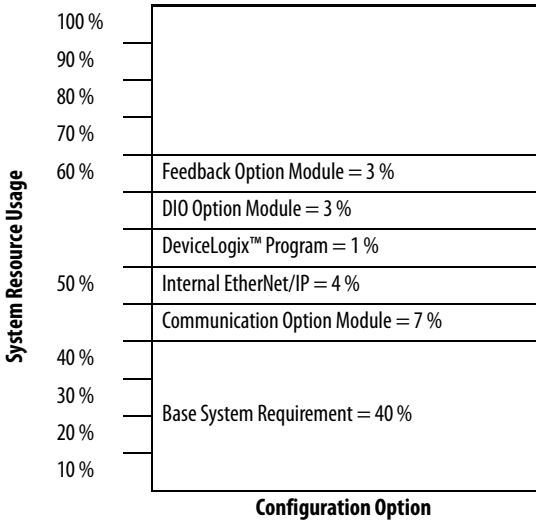

Table 9 - System Resource Allocation - Drive Frames 8…10

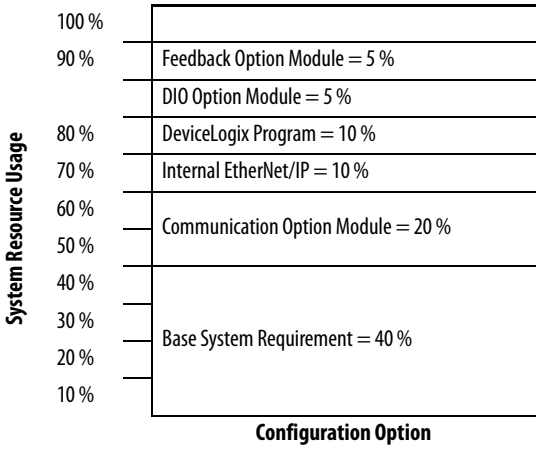

Hardware Service Manual

The PowerFlex 750-Series AC Drive Hardware Service Manual, publication 750-TG001, provides schematics and detailed instructions on part replacement for Frame 8 drives and larger.

Integrated Motion Applications

When a PowerFlex 755 is used in Integrated Motion on EtherNet/IP mode, the Logix controller and RSLogix 5000® are the exclusive owners of the drive (same as Kinetix®). An HIM or drive software, such as DriveExplorer™ and DriveExecutive™, cannot be used to control the drive or change configuration settings. These tools can only be used for monitoring.

Fault and Alarm Display Codes

Event numbers for PowerFlex 750-Series faults and alarms are displayed in one of three formats.

- Port 00 (Host Drive) displays the event number only. For example, Fault 3 “Power Loss” is displayed as:
  Fault Code 3.
- Ports 01...09 use the format PEEE, which identifies the port number (P) and event number (EEE). For example, Fault 1 “Analog In Loss” on an I/O module that is installed in Port 4 is displayed as:
  Fault Code 4001.
- Ports 10...14 use the format PPEEE, which identifies the port number (PP) and event number (EEE). For example, Fault 37 “Net IO Timeout” on Port 14 is displayed as:
  Fault Code 14037.

Parameter Access Level

Three parameter access level options are selectable by P301 [Access Level].

- Option 0 “Basic” is the most limited view that only displays commonly used parameters and options.
- Option 1 “Advanced” is an expanded view that can be required to access more advanced drive features.
- Option 2 “Expert” provides a comprehensive view of the entire drive parameter set.

If a parameter is not displaying, you may need to select the “Advanced” or “Expert” view to make that parameter visible in the list.

Drive Fault and Alarm Descriptions

Table 10 contains a list of drive-specific faults and alarms and includes the following information:

- The fault or alarm type
- The action that is taken when the drive faults
- The parameter that is used to configure the fault or alarm (if applicable)
- A description and action (where applicable)
- See Faults, Alarms, and Configurable Conditions for information on the Auto Reset (Auto Reset Run/Restart) and Auto Clear (Auto Reset Clear) columns in this table.
- The Emerg Prot OVRD column shows the bit in P1683 [Emerg Prot OVRD], if applicable, related to the fault. See P1683 for the related events overridden by the function when the bit is set.

The faults and alarms that are listed in Table 10 only apply to non-Integrated Motion applications. See Table 39 on page 543 for a list of Integrated Motion faults.

Table 10 - Drive Fault and Alarm Types, Descriptions, and Actions

Event No.	Fault/Alarm Text	Type	Fault Action	Configuration Parameter	Auto Reset	Auto Clear	Emerg Prot OVRD	Description/Actions
0	No Entry							
2	Auxiliary Input	Resettable Fault	Coast	157 [DI Aux Fault]	Y	Y	Bit 5 "PERIF Flts"	An auxiliary input interlock is open. A condition within the application is not allowing the drive to energize the motor and the digital input that is assigned in P157 [DI Aux Fault] has forced this fault.
3	Power Loss	Configurable		449 [Power Loss Actn]	Y	Y	Bit 1 "Line Faults"	The DC bus voltage remained below the [Pwr Loss *n* Level] of nominal for longer than the time programmed in [Pwr Loss *n* Time].
4	UnderVoltage	Configurable		460 [UnderVltg Action]	Y	Y	Bit 1 "Line Faults"	If the bus voltage indicated in P11 [DC Bus Volts] falls below the value set in P461 [UnderVltg Level] an undervoltage condition exists.
5	OverVoltage	Resettable Fault	Coast		Y	Y	Bit 1 "Line Faults"	The DC bus voltage exceeded the maximum value. See P11 [DC Bus Volts].
7	Motor Overload	Configurable		410 [Motor OL Actn]	Y	Y	Bit 0 "Load Faults"	An internal electronic overload trip has occurred. See P7 [Output Current], P26 [Motor NP Amps, P413 [Mtr OL Factor], and/or P414 [Mtr OL Hertz].
8	Heatsink OvrTemp	Resettable Fault	Coast		Y	Y	Bit 2 "PwrStrucFlts"	The heatsink temperature has exceeded 100 % of the drive temperature. Heatsink over temperature occurs between 115…120 °C. The exact value is stored in drive firmware. See P943 [Drive Temp Pct] and/or P944 [Drive Temp C].
9	Trnsistr OvrTemp	Resettable Fault	Coast		Y	Y		The output transistors have exceeded the maximum operating temperature. See P941 [IGBT Temp Pct] and/or P942 [IGBT Temp C]. If using the drive on a chiller plate, P38 [PWM Frequency] must be set to 2 kHz.
10	DynBrake OvrTemp	Alarm 1						The dynamic brake resistor has exceeded its maximum operating temperature. Check settings of parameters P382 [DB Resistor Type] through P385 [DB ExtPulseWatts].

Event No.	Fault/Alarm Text	Type	Fault Action	Configuration Parameter	Auto Reset	Auto Clear	Emerg Prot OVRD	Description/Actions
12	HW OverCurrent	Resettable Fault	Coast		Y	Y	Bit 0 "Load Faults"	The drive output current has exceeded the hardware current limit. Check the motor and external wiring to the drive output terminals for a grounded condition. Check the programming. Check for excess load, and other causes of excess current. Insulation Resistance (IR" test the wiring to motor.
13	Ground Fault	Resettable Fault	Coast		Y	Y	Bit 0 "Load Faults"	A current path to earth ground greater than 25 % of drive rating has occurred. Check the motor and external wiring to the drive output terminals for a grounded condition. Check the programming. Check for excess load, and other causes of excess current. Insulation Resistance (IR) test the wiring to motor.
14	Ground Warning	Configurable		466 [Ground Warn Actn]			Bit 0 "Load Faults"	The ground current has exceeded the level set in P467 [Ground Warn Lvl].
15	Load Loss	Configurable		441 [Load Loss Action]			Bit 0 "Load Faults"	The output torque current is below the value programmed in P442 [Load Loss Level] for a time period greater than the time programmed in P443 [Load Loss Time].
17	Input Phase Loss	Configurable		462 [InPhase LossActn]			Bit 1 "Line Faults"	The DC bus ripple has exceeded a preset level. Make these checks and adjustments in this order. • Check input impedance balance. • Increase the setting of P463 [InPhase Loss Lvl] to make the drive less sensitive. • Tune the bus regulator or speed regulator to mitigate the effects of dynamic cyclic loads on DC bus ripple. • Disable the fault by setting P462 [InPhase LossActn] to 0 "Ignore" and use an external phase loss detector such as a Bulletin 809S relay.
18	Motor PTC Trip	Configurable		250 [PTC Cfg]			Bit 8 "Board Faults"	Motor PTC (Positive Temperature Coefficient) over temperature.
19	Task Overrun	Alarm 1						System resource utilization is at or above 90 % of capacity. Review the system resource allocation table on page 318.
20	TorqPrv Spd Band	Resettable Fault	Coast				Bit 10 "TorqPrv Flts"	The difference between P2 [Commanded SpdRef] and P3 [Mtr Vel Fdbk] has exceeded the level programmed in P1105 [Speed Dev Band] for a time period greater than the time programmed in P1106 [SpdBand Intgrtr].

Event No.	Fault/Alarm Text	Type	Fault Action	Configuration Parameter	Auto Reset	Auto Clear	Emerg Prot OVRD	Description/Actions
21	Output PhaseLoss	Configurable		444 [OutPhaseLossActn]			Bit 0 "Load Faults"	The current in one or more phases has been lost or remains below the threshold set in P445 [Out PhaseLossLvl] for 1 second. Decreasing the threshold makes the drive less sensitive to tripping. A decreased threshold is necessary when the motor is smaller than the drive rating. If TorqProve™ is active, the current in one or more phases has been lost or remains below a threshold for five msecs. The phases are checked at start to be sure that torque is delivered to the load. If the drive is faulting on start, increase P44 [Flux Up Time]. If TorqProve is active, and the brake is slipping, this fault occurs. When TorqProve is used, before the signal to the brake is applied to release it, the flux up time is used to check the three phases. The angle is adjusted to be sure that current is flowing through all three phases. If the motor moves during this test, the brake is not holding and a phase loss can occur. If TorqProve is active, and no brake is present, this fault occurs. Check for an open output contactor.  **ATTENTION:** If a PM motor is used and motor phase is lost, lower P445 [OutPhaseLossLvl] to 0 if TorqProve is not used or the drive output (motor) contacts are not used. Otherwise, lower P445 [OutPhaseLossLvl] until the drive is able to start and run without faulting.
24	Decel Inhibit	Configurable		409 [Dec Inhibit Actn]			Bit 0 "Load Faults"	The drive is not following a commanded deceleration because it is attempting to limit the bus voltage. For high inertia loads, set P621 [Slip RPM at FLA] to 0 (V/Hz and SVC modes only).
25	OverSpeed Limit	Resettable Fault	Coast		Y	Y	Bit 0 "Load Faults"	The motor operating speed exceeds the limit set by the maximum speed setting P524 [Overspeed Limit]. For forward motor rotation, this limit is P520 [Max Fwd Speed] + P524 [Overspeed Limit]. For reverse motor rotation, this limit is P521 [Max Rev Speed] - P524 [Overspeed Limit]. When flux vector control modes are selected in P35 [Motor Ctrl Mode], P131 [Active Vel Fdbk] determines the motor operating speed. For all other non-flux vector control modes, P1 [Output Frequency] determines the motor operating speed.
26	Brake Slipped	Alarm 1						The encoder movement has exceeded the level in P1110 [Brk Slip Count] after the brake was set and the brake slip maneuver is controlling the drive. (Drive is active.) Cycle power to the drive to reset.
		Alarm 2						The encoder movement has exceeded the level in P1110 [Brk Slip Count] after the brake was set and the brake slip maneuver is finished. (Drive is stopped.) Cycle power to the drive to reset.

Event No.	Fault/Alarm Text	Type	Fault Action	Configuration Parameter	Auto Reset	Auto Clear	Emerg Prot OVRD	Description/Actions
27	Torq Prove Cflct	Alarm 2						When P1100 [Trq Prove Cfg] is enabled, these parameters must be properly configured: • P35 [Motor Ctrl Mode] • P125 [Pri Vel Fdbk Sel] and P135 [Mtr Psn Fdbk Sel] must be set to a valid feedback device. The feedback device does not have to be the same device. However, Open Loop and Simulation Feedback are not considered valid feedback devices. If parameters 125 and 135 are set to a feedback module, verify that the module parameters are set properly. On the module, the feedback loss action CANNOT be set to 0 "Ignore." Does not work in PM FV mode. Does not work with single ended or channel A only encoders.
28	TP Encls Config	Alarm 2						Encoderless TorqProve has been enabled but the application concerns of encoderless operation have not read and understood. Read the "Attention" on page 372 relating to the use of TorqProve with no encoder.
29	Analog In Loss	Configurable		263 [Anlg In0 LssActn]			Bit 8 "Board Faults"	Analog input has a lost signal.
30	Relay0 Life	Configurable		292 [R00 LifeEvntActn]			Bit 8 "Board Faults"	Predictive maintenance.
33	AuRsts Exhausted	Resettable Fault	Coast	348 [Auto Rstrt Tries]			Bit 8 "Board Faults"	The drive attempted to reset a fault and resume running for the programmed number of tries, unsuccessfully.
34	AutClrFltExhaust	Resettable Fault	Coast	338 [AutoClrFlt Tries]			Bit 8 "Board Faults"	Auto Clear Faults Exhausted This fault indicates when the running Auto clear faults retry value has exceeded parameter 338 [AutoClrFlt Tries], provided bit 1 in parameter 347 [Auto Retry Fault] is set.
35	IPM OverCurrent	Resettable Fault	Coast		Y	Y	Bit 0 "Load Faults"	The current magnitude has exceeded the trip level set by P1640 [IPM Max Cur]. Set this value to 0 only when the drive is set to the V/Hz or SVC mode.
36	SW OverCurrent	Resettable Fault	Coast		Y	Y	Bit 0 "Load Faults"	The drive output current has exceeded the 1 ms current rating. This rating is greater than the 3 second current rating and less than the hardware overcurrent fault level. It is typically 200…250% of the drive continuous rating.
38 39 40	Phase U to Grnd Phase V to Grnd Phase W to Grnd	Resettable Fault	Coast				Bit 0 "Load Faults"	A phase to ground fault has been detected between the drive and motor in this phase. Rotate U/T1, V/T2, W/T3 connections. • If the problem follows the wire, suspect a field wiring problem. • If no change, suspect a problem with the drive.
41 42 43	Phase UV Short Phase VW Short Phase WU Short	Resettable Fault	Coast				Bit 0 "Load Faults"	Excessive current has been detected between these two output terminals. Rotate U/T1, V/T2, W/T3 connections. • If the problem follows the wire, suspect a field wiring problem. • If no change, suspect a problem with the drive.
44 45 46	Phase UNegToGrnd Phase VNegToGrnd Phase WNegToGrnd	Resettable Fault	Coast				Bit 0 "Load Faults"	A phase to ground fault has been detected between the drive and motor in this phase. Rotate U/T1, V/T2, W/T3 connections. • If the problem follows the wire, suspect a field wiring problem. • If no change, suspect a problem with the drive.
48	System Defaulted	Resettable Fault	Coast				Bit 8 "Board Faults"	The drive was commanded to write default values.
49	Drive Powerup	–						A Power Up Marker in the Fault Queue indicating that the drive power cycled.
51	Clr Fault Queue	–						Indication that the fault queue has been cleared.

Event No.	Fault/Alarm Text	Type	Fault Action	Configuration Parameter	Auto Reset	Auto Clear	Emerg Prot OVRD	Description/Actions
55	Ctrl Bd Overtemp	Resettable Fault	Coast				Bit 8 "Board Faults"	The temperature sensor on the main control board detected excessive heat. See product temperature requirement.
58	Module Defaulted	Resettable Fault	Coast				Bit 8 "Board Faults"	The module was commanded to write default values.
59	Invalid Code	Resettable Fault	Coast				Bit 8 "Board Faults"	Internal error.
61	Shear Pin 1	Configurable		435 [Shear Pin 1 Actn]	Y	Y	Bit 0 "Load Faults"	The programmed value in P436 [Shear Pin1 Level] has been exceeded.
62	Shear Pin 2	Configurable		438 [Shear Pin 2 Actn]	Y	Y	Bit 0 "Load Faults"	The programmed value in P439 [Shear Pin2 Level] has been exceeded.
64	Drive OverLoad	Alarm 1						P940 [Drive OL Count] has exceeded 50 % but is less than 100 %.
		Resettable Fault	Coast		Y	Y	Bit 2 "PwrStrucFlts"	P940 [Drive OL Count] has exceeded 100 %. Reduce the mechanical load on the drive. Inverter fiber-optic connection is not detected on Frame 8 drive. This fault can occur on power-up if the control detects that no inverter is detected via the fiber-optic communication on a Frame 8 drive.
66	OW Torq Level	Alarm 1		1172 [TorqAlarm Level]				Oil Well Torque Level If the Torque goes above P1172 [TorqAlarm Level] then the alarm condition exists.
67	Pump Off	Alarm 1						Pump Off condition has been detected.
68	OW Torq Level Lo	Alarm 1		1185 [TorqAlarm LoLvl]				Oil Well Torque Level Low If the Torque goes below P1185 [TorqAlarm LoLvl] then the alarm condition exists.
71	Port 1 Adapter	Resettable Fault	Coast				Bit 11 "Port1-3 Flts"	The DPI™ communications option has a fault. See device event queue.
72	Port 2 Adapter						Bit 11 "Port1-3 Flts"	
73	Port 3 Adapter						Bit 11 "Port1-3 Flts"	
74	Port 4 Adapter						Bit 12 "Port 4 Flts"	
75	Port 5 Adapter						Bit 13 "Port 5 Flts"	
76	Port 6 Adapter						Bit14 "Port 6 Flts"	
77	IR Volts Range	Alarm 2						The value for P73 [IR Voltage Drop], which is calculated from the motor nameplate data, is not within the range of acceptable values, as determined by the Calculated Autotune procedure. Check the motor nameplate data against parameters P25 [Motor NP Volts] through P30 [Motor NP Power].
		Resettable Fault	Coast				Bit 8 "Board Faults"	The measured value for P73 [IR Voltage Drop] is not within the range of acceptable values, as determined by the Static or Rotate Autotune procedure.
78	FluxAmpsRef Rang	Alarm 2						The value for flux amps exceeds the value programmed in P26 [Motor NP Amps], as calculated by the Autotune procedure. Check motor nameplate data against parameters P25 [Motor NP Volts] through P30 [Motor NP Power].
		Resettable Fault	Coast				Bit 8 "Board Faults"	The value for flux amps exceeds the value programmed in P26 [Motor NP Amps], as measured by the Static or Rotate Autotune procedure.

Event No.	Fault/Alarm Text	Type	Fault Action	Configuration Parameter	Auto Reset	Auto Clear	Emerg Prot OVRD	Description/Actions
79	Excessive Load	Resettable Fault	Coast				Bit 8 "Board Faults"	The motor did not come up to speed in the allotted time during Autotune.
80	AutoTune Aborted	Resettable Fault	Coast				Bit 8 "Board Faults"	The Autotune function was manually canceled or a fault occurred.
81	Port 1 DPI Loss	Resettable Fault	Coast	324 [Logic Mask]			Bit 11 "Port1-3 Flts"	The DPI port stopped communicating. Check connections and drive grounding.
82	Port 2 DPI Loss						Bit 11 "Port1-3 Flts"	
83	Port 3 DPI Loss						Bit 11 "Port1-3 Flts"	
84	Port 4 DPI Loss						Bit 12 "Port 4 Flts"	
85	Port 5 DPI Loss						Bit 13 "Port 5 Flts"	
86	Port 6 DPI Loss						Bit 14 "Port 6 Flts"	
87	IXo VoltageRange	Alarm 2						The default for P70 [Autotune] is 1 "Calculate" and the voltage that is calculated for motor inductive impedance exceeds 25 % of the value of P25 [Motor NP Volts].
		Resettable Fault	Coast				Bit 8 "Board Faults"	P70 [Autotune] is set to 2 "Static Tune" or 3 "Rotate Tune" and the voltage that is measured for motor inductive impedance exceeds 25 % of the value of P25 [Motor NP Volts].
91	Pri VelFdbk Loss	Configurable		Note: See option module for configuration parameter number			Bit 9 "Fdbk Faults"	A Feedback Loss has been detected for the source of P127 [Pri Vel Feedback]. The feedback loss could be due to a problem detected by the feedback option module selected by P125 [Pri Vel Fdbk Sel] or due to a loss in communication between the feedback option module and main control board. The source of primary velocity feedback must be configured not to fault if the feedback loss switchover feature is used.
93	Hw Enable Check	Resettable Fault	Coast				Bit 8 "Board Faults"	The hardware enable is disabled (a jumper is installed) but indicates not enabled.
94	Alt VelFdbk Loss	Configurable		Note: See option module for configuration parameter number			Bit 9 "Fdbk Faults"	A Feedback Loss has been detected for the source of P128 [Alt Vel Fdbk Sel]. The feedback loss could be due to a problem detected by the feedback option module selected by P128 [Alt Vel Fdbk Sel], or due to a loss in communication between the feedback option module and main control board.
95	Aux VelFdbk Loss	Configurable		Note: See option module for configuration parameter number			Bit 9 "Fdbk Faults"	A Feedback Loss has been detected for the source of P132 [Aux Vel Fdbk Sel]. The feedback loss could be due to a problem detected by the feedback option module selected by P132 [Aux Vel Fdbk Sel], or due to a loss in communication between the feedback option module and main control board.
96	PositionFdbkLoss	Configurable		Note: See option module for configuration parameter number			Bit 9 "Fdbk Faults"	A Feedback Loss has been detected for the source of P847 [Psn Fdbk]. The feedback loss could be due to a problem detected by the feedback option module selected by P135 [Mtr Psn Fdbk Sel], or due to a loss in communication between the feedback option module and main control board.
97	Auto Tach Switch	Resettable Fault	Coast	635 [Spd Options Ctrl] Bit 7 "Auto Tach SW"			Bit 9 "Fdbk Faults"	Indication that either of the two following conditions exists. • Tach switch has occurred and alternate feedback device has failed. • Tach switch has not occurred, Auto Tach Switch Option is enabled and both primary and alternate devices have failed.
100	Parameter Chksum	Resettable Fault	Coast				Bit 8 "Board Faults"	The checksum read from the non-volatile storage does not match the checksum calculated. The data is set to the default value.

Event No.	Fault/Alarm Text	Type	Fault Action	Configuration Parameter	Auto Reset	Auto Clear	Emerg Prot OVRD	Description/Actions
101	PwrDn NVS Blank	Resettable Fault	Coast				Bit 8 "Board Faults"	Internal data error. • Reset parameter defaults. See publication 20HIM-UM001 for instructions. • Reload parameters. • If problem persists, replace main control board. Fault normally occurs after a flash update to correct F117 fault.
102	NVS Not Blank	Resettable Fault	Coast				Bit 8 "Board Faults"	Internal data error.
103	PwrDn NVS Incomp	Resettable Fault	Coast				Bit 8 "Board Faults"	Internal data error.
104	Pwr Brd Checksum	Non-Reset Fault						The checksum read from the non-volatile storage does not match the checksum calculated. The data is set to the default value.
106	Incompat MCB-PB	Non-Reset Fault	Coast					The main control board did not recognize the power structure. Flash with newer Application revision.
107	Replaced MCB-PB	Resettable Fault	Coast				Bit 8 "Board Faults"	The main control board was moved to another power structure. The data is set to the default values.
108	Anlg Cal Chksum	Non-Reset Fault	Coast					The checksum read from the analog calibration data does not match the checksum calculated. Replace main control board.
110	Ivld Pwr Bd Data	Non-Reset Fault	Coast					Power structure data invalid. • Verify ribbon cable connection between the main control board and the power interface board. • Replace power interface board.
111	PwrBd Invalid ID	Non-Reset Fault	Coast					Power structure ID invalid. • Verify ribbon cable connection between the main control board and the power interface board. • Replace power interface board.
112	PwrBd App MinVer	Resettable Fault	Coast				Bit 8 "Board Faults"	Power structure needs newer Application revision. Flash with newer Application revision.
113	Tracking DataErr	Resettable Fault	Coast				Bit 8 "Board Faults"	Internal data error.
115	PwrDn Table Full	Resettable Fault	Coast				Bit 8 "Board Faults"	Internal data error.
116	PwrDnEntry2Large	Resettable Fault	Coast				Bit 8 "Board Faults"	Internal data error.
117	PwrDn Data Chksm	Resettable Fault	Coast				Bit 8 "Board Faults"	Internal data error.
118	PwrBd PwrDn Chks	Resettable Fault	Coast				Bit 8 "Board Faults"	Internal data error.
124	App ID Changed	Resettable Fault	Coast				Bit 8 "Board Faults"	Application Firmware changed. Verify Application revision.
125	Using Backup App	Resettable Fault	Coast				Bit 8 "Board Faults"	Application did not flash correctly. Reflash.
134	Start On PowerUp	Alarm 1						When P345 [Start At PowerUp] is enabled, an alarm is set for the time programmed in P346 [PowerUp Delay].
137	Ext Prechrg Err	Configurable		323 [Prchrg Err Cfg]			Bit 1 "Line Faults"	The seal contact on the external precharge contactor has opened (as signaled by P190 [DI Prchrg Seal]) while the drive was running (PWM was active).
138	Precharge Open	Resettable Fault	Coast	321 [Prchrg Control] 190 [DI Prchrg Seal] 189 [DI Precharge]	Y	Y	Bit 1 "Line Faults"	The internal precharge was commanded to open while the drive was running (PWM was active). The internal fault latch is automatically cleared when PWM is disabled.
141	Autn Enc Angle	Resettable Fault	Coast				Bit 8 "Board Faults"	P78 [Encdrlss AngComp] is out of range.

Event No.	Fault/Alarm Text	Type	Fault Action	Configuration Parameter	Auto Reset	Auto Clear	Emerg Prot OVRD	Description/Actions
142	Autn Spd Rstrct	Resettable Fault	Coast				Bit 8 "Board Faults"	Frequency limit settings are preventing the drive from reaching a suitable speed during an Inertia Tune test.
143	Autotune CurReg	Resettable Fault	Coast				Bit 8 "Board Faults"	Calculated values for P96 [VCL Cur Reg Kp] and/or P97 [VCL Cur Reg Ki] are out of range.
144	Autotune Inertia	Resettable Fault	Coast				Bit 8 "Board Faults"	Results from the Inertia Tune test out of range for P76 [Total Inertia].
145	Autotune Travel	Resettable Fault	Coast				Bit 8 "Board Faults"	When P77 [Inertia Test Lmt] is set, the Inertia Tune test was prevented from reaching a suitable speed to run the test.
152	No Stop Source	Resettable Fault	Coast				Bit 5 "PERIF Flts"	Last stop source has been removed.
155	Bipolar Conflict	Alarm 2						P308 [Direction Mode] is set to 1 "Bipolar" or 2 "Rev Disable" and one or more digital inputs is enabled for direction control.

Event No.	Fault/Alarm Text	Type	Fault Action	Configuration Parameter	Auto Reset	Auto Clear	Emerg Prot OVRD	Description/Actions
157	DigIn Cfg B	Alarm 2						Digital input conflict. Input functions that cannot exist simultaneously have been selected (for example run and start). Correct Digital Input configuration.

Digital Input combinations marked "●" cause an alarm.

	DI Stop Mode B	DI Speed Sel 2	DI Speed Sel 1	DI Speed Sel 0	DI Manual Ctrl	DI Decel 2	DI Accel 2	DI Fwd Reverse	DI Emerg OvrRide	DI Jog 2 Reverse	DI Jog 2 Forward	DI Jog 2	DI Jog 1 Reverse	DI Jog 1 Forward	DI Jog 1	DI Run Reverse	DI Run Forward	DI Run	DI Start	DI HOA Start	DI Clear Fault	DI Aux Fault	DI Cur Lmt Stop	DI Coast Stop	DI Stop
DI Stop																									
DI Coast Stop																								■	
DI Cur Lmt Stop																							■		
DI Aux Fault																						■			
DI Clear Fault																					■				
DI HOA Start										●	●		●	●		●	●	●	●	■					
DI Start										●	●		●	●		●	●	●	■	●					
DI Run										●	●		●	●		●	●	■	●	●					
DI Run Forward								●				●			●		■	●	●	●					
DI Run Reverse								●				●			●	■		●	●	●					
DI Jog 1										●	●		●	●	■	●	●								
DI Jog 1 Forward								●				●		■	●			●	●	●					
DI Jog 1 Reverse								●				●	■		●			●	●	●					
DI Jog 2										●	●	■	●	●		●	●								
DI Jog 2 Forward								●			■	●			●			●	●	●					
DI Jog 2 Reverse								●		■		●			●			●	●	●					
DI Emerg OvrRide									■																
DI Fwd Reverse								■		●	●		●	●		●	●								
DI Accel 2							■																		
DI Decel 2						■																			
DI Manual Ctrl					■																				
DI Speed Sel 0				■																					
DI Speed Sel 1			■																						
DI Speed Sel 2		■																							
DI Stop Mode B	■																								

Event No.	Fault/Alarm Text	Type	Fault Action	Configuration Parameter	Auto Reset	Auto Clear	Emerg Prot OVRD	Description/Actions
158	DigIn Cfg C	Alarm 2						Digital input conflict. Input functions that cannot be assigned to the same digital input have been selected (for example run and stop). Correct Digital Input configuration.

Digital Input combinations marked "●" cause an alarm.

	DI Stop Mode B	DI Speed Sel 2	DI Speed Sel 1	DI Speed Sel 0	DI Manual Ctrl	DI Decel 2	DI Accel 2	DI Fwd Reverse(1)	DI Emergy OvrRide	DI Jog 2 Reverse(1)	DI Jog 2 Forward(1)	DI Jog 2	DI Jog 1 Reverse(1)	DI Jog 1 Forward(1)	DI Jog 1	DI Run Reverse(1)	DI Run Forward(1)	DI Run	DI Start	DI HOA Start	DI Clear Fault	DI Aux Fault	DI Cur Lmt Stop	DI Coast Stop	DI Stop
DI Stop		●	●	●	●	●	●	●	●	●	●		●	●		●	●	●	●	●	●	●	●	●	■
DI Coast Stop		●	●	●	●	●	●	●	●	●	●		●	●		●	●	●	●	●	●	●	●	■	●
DI Cur Lmt Stop		●	●	●	●	●	●	●	●	●	●		●	●		●	●	●	●	●	●	●	■	●	●
DI Aux Fault		●	●	●	●	●	●	●	●	●	●	●	●	●	●	●	●	●	●	●	●	■	●	●	●
DI Clear Fault		●	●	●	●	●	●	●	●	●	●		●	●		●	●	●			■	●	●	●	●
DI HOA Start		●	●	●		●	●	●	●	●	●	●	●	●	●	●	●	●	●	■		●	●	●	●
DI Start		●	●	●		●	●	●	●	●	●	●	●	●	●	●	●	●	■	●		●	●	●	●
DI Run		●	●	●	●	●	●	●	●	●	●	●	●	●	●	●	●	■	●	●	●	●	●	●	●
DI Run Forward(1)		●	●	●	●	●	●	●	●	●	●	●	●	●	●	●	■	●	●	●	●	●	●	●	●
DI Run Reverse(1)		●	●	●	●	●	●	●	●	●	●	●	●	●	●	■	●	●	●	●	●	●	●	●	●
DI Jog 1		●	●	●		●	●	●	●	●	●	●	●	●	■	●	●	●	●	●		●			
DI Jog 1 Forward(1)		●	●	●	●	●	●	●	●	●	●	●	●	■	●	●	●	●	●	●	●	●	●	●	●
DI Jog 1 Reverse(1)		●	●	●	●	●	●	●	●	●	●	●	■	●	●	●	●	●	●	●	●	●	●	●	●
DI Jog 2		●	●	●		●	●	●	●	●	●	■	●	●	●	●	●	●	●	●		●			
DI Jog 2 Forward(1)		●	●	●	●	●	●	●	●	●	■	●	●	●	●	●	●	●	●	●	●	●	●	●	●
DI Jog 2 Reverse(1)		●	●	●	●	●	●	●	●	■	●	●	●	●	●	●	●	●	●	●	●	●	●	●	●
DI Emergy OvrRide		●	●	●	●	●	●	●	■	●	●	●	●	●	●	●	●	●	●	●	●	●	●	●	●
DI Fwd Reverse(1)		●	●	●	●	●	●	■	●	●	●	●	●	●	●	●	●	●	●	●	●	●	●	●	●
DI Accel 2		●	●	●	●		■	●	●	●	●	●	●	●	●	●	●	●	●	●	●	●	●	●	●
DI Decel 2		●	●	●	●	■		●	●	●	●	●	●	●	●	●	●	●	●	●	●	●	●	●	●
DI Manual Ctrl		●	●	●	■	●	●	●	●	●	●		●	●		●	●	●			●	●	●	●	●
DI Speed Sel 0		●	●	■	●	●	●	●	●	●	●	●	●	●	●	●	●	●	●	●	●	●	●	●	●
DI Speed Sel 1		●	■	●	●	●	●	●	●	●	●	●	●	●	●	●	●	●	●	●	●	●	●	●	●
DI Speed Sel 2		■	●	●	●	●	●	●	●	●	●	●	●	●	●	●	●	●	●	●	●	●	●	●	●
DI Stop Mode B	■																								

(1) Parameter setting is not compatible with parameter 308 [Direction Mode] being set to "Bipolar." If this parameter alarms, check that P308 is set to "Unipolar."

161	Sleep Config	Alarm 2						There is a Sleep/Wake configuration error. With Sleep Wake Mode = Direct, possible causes include: Drive is stopped and Wake Level < Sleep Level. Stop=CF, Run, Run Fwd, or Run Rev is not configured in Digital Input functions.
162	Waking	Alarm 1						The Wake timer is counting toward a value that starts the drive.
168	HeatSinkUnderTemp	Resettable Fault					Bit 2 "PwrStrucFlts"	Heatsink temperature sensor is reporting a value below -18.7 °C (-1.66 °F) or the sensor feedback circuit is open. See P943 [Drive Temp Pct] and/or P944 [Drive Temp C].

Event No.	Fault/Alarm Text	Type	Fault Action	Configuration Parameter	Auto Reset	Auto Clear	Emerg Prot OVRD	Description/Actions
169	PWM Freq Reduced	Alarm 1						The PWM Frequency has been reduced from the value set in P38 [PWM Frequency] due to excessive IGBT junction temperatures. See also P420 [Drive OL Mode].
170	CurLimit Reduced	Alarm 1						The current limit value has been reduced from the value set in [Current Limit *n*] due to excessive IGBT junction temperatures or P940 [Drive OL Count] = 95 %. See also P420 [Drive OL Mode].
171	Adj Vltg Ref	Alarm 1						Invalid adjustable-voltage reference selection conflict.
175	Travel Lim Cflct	Non-Reset Fault	Current Limit Stop					Travel limits are in conflict. Both the forward and reverse travel limits indicate that they are simultaneously active. If digital limits (hardware signals) are in use, ensure that the following forward and reverse digital input pairs are not both off simultaneously: fwd/rev decel travel limit digital inputs and fwd/rev end stop travel limit digital inputs. The travel limit digital inputs are meant to be connected to normally closed switch contacts, so the digital input status reads an off (0 = False) bit status when the machine is on limit and the switch contact opens. A possible cause for this condition is loss of common power to both the forward and reverse travel limit switches. If software travel limits are in use, check the state of the fwd/rev travel limit bits in P1101 [Trq Prove Setup]. These bits read an on (1 = Enabled) bit status when the machine is on limit. Bit 2 "Decel Fwd" and Bit 4 "Decel Rev" should not be on simultaneously. Similarly, Bit 3 "End Stop Fwd" and Bit 5 "End Stop Rev" should not be on simultaneously.
176	Home Config	Alarm 2						Home to Torque config conflict
177	Profiling Active	Alarm 1						The Profile/Indexer is active.
178	Homing Active	Alarm 1						The Homing function is active.
179	Home Not Set	Alarm 1						The Home position was not set before profile operation.
181	Fwd End Limit	Resettable Fault	Current Limit Stop				Bit 8 "Board Faults"	The selected digital input for one of the end limit switches, P196 [DI Fwd End Limit] or P198 [DI Rev End Limit], has detected a falling edge and P313 [Actv SpTqPs Mode] is not set to 1 "Speed Reg." If digital limits (hardware signals) are in use, ensure that the digital inputs are connected to normally closed contacts. When the end limit is reached the contacts open.
182	Rev End Limit	Resettable Fault	Current Limit Stop				Bit 8 "Board Faults"	The selected digital input for one of the end limit switches, P196 [DI Fwd End Limit] or P198 [DI Rev End Limit], has detected a falling edge and P313 [Actv SpTqPs Mode] is not set to 1 "Speed Reg." If digital limits (hardware signals) are in use, ensure that the digital inputs are connected to normally closed contacts. When the end limit is reached the contacts open.
185	Freq Conflict	Alarm 2						Indicates that the values of P520 [Max Fwd Speed] and P521 [Max Rev Speed] are in conflict with the value of P63 [Break Frequency].
186	VHz Neg Slope	Alarm 2						Indicates that the V/Hz curve segment resulted in a negative V/Hz slope. See P60 [Start Acc Boost] through P63 [Break Frequency].
187	VHz Boost Limit	Alarm 2						Indication that one of the two following conditions exists. • P60 [Start/Acc Boost] and P61 [Run Boost] are greater than P25 [Motor NP Volts] x 0.25 when P65 [VHz Curve] = 0 "Custom V/Hz." • P61 [Run Boost] is greater than P25 [Motor NP Volts] x 0.25 when P65 [VHz Curve] = 1 "Fan/Pump."

Event No.	Fault/Alarm Text	Type	Fault Action	Configuration Parameter	Auto Reset	Auto Clear	Emerg Prot OVRD	Description/Actions
190	PM FV Pri Fdbk	Alarm 2						Indicates a control mode and primary-feedback device configuration error. P35 [Motor Ctrl Mode] is set to the permanent magnet flux vector "PM FV" control mode, P125 [Pri Vel Fdbk Sel] is set to P137 [Open Loop Fdbk] (port 0).
191	PM FV Alt Fdbk	Alarm 2						Indicates a control mode and alternate-feedback device configuration error. P35 [Motor Ctrl Mode] is set to the permanent magnet flux vector "PM FV" control mode, P635 [Spd Options Ctrl] is set to bit 7 "Auto Tach SW," P128 [Alt Vel Fdbk Sel] is set to P137 [Open Loop Fdbk] (port 0).
192	Fwd Spd Lim Cfg	Alarm 2						The forward speed reference is out of range. Verify the settings of P38 [PWM Frequency] and P520 [Max Fwd Speed]. Lower carrier frequencies reduce the output frequency range. Verify that P522 [Min Fwd Speed] is less than or equal to P520 [Max Fwd Speed].
193	Rev Spd Lim Cfg	Alarm 2						The reverse speed reference is out of range. Verify the settings of P38 [PWM Frequency] and P521 [Max Rev Speed]. Lower carrier frequencies reduce the output frequency range. Verify that P523 [Min Rev Speed] is greater than or equal to P521 [Max Rev Speed].
194	PM Offset Conflict	Alarm 2						Both P80 [PM Cfg] bit 0 "AutoOfstTest" and bit 2 "StaticTestEn" are set. Select only one.
195	IPMSpdEstErr	Resettable Fault	Coast				Bit 9 "Fdbk Faults"	Speed Estimator failed to track High-Speed angle.
196	PM FS Cflct	Alarm 2						Attempted to set P356 [FlyingStart Mode] to 2 "Sweep" with a permanent magnet motor selected in P35 [Motor Ctrl Mode].
197	PM Offset Failed	Resettable Fault	Coast				Bit 0 "PwrStrucFlts"	Indicates that the PM Offset test failed due to interruption of the test before completion or the motor movement failed to reach the proper amount of rotation during the test. The test is rescheduled when this fault occurs. If failure occurred because of movement limitations, increase the [PM OfstTst Cur]. If this solution fails to correct the problem, the load on the motor maybe too large.
201	SpdReg DL Err	Alarm 2						Attempted to establish a Datalink to P644 [Spd Err Flt BW], P645 [Speed Reg KP], or P647 [Speed Reg Ki] and P636 [Speed Reg BW] is set to a value other than zero.
202	AltSpdReg DL Err	Alarm 2						Attempted to establish a Datalink to P649 [Alt Speed Reg Kp], P650 [Alt Speed Reg Ki], or P651 AltSpdErr FltrBW] and P648 [Alt Speed Reg BW] is set to a value other than zero.
203	Port 13 Adapter	Resettable Fault	Coast				Bit 6 "ENET PrtFlts"	The embedded EtherNet/IP adapter has a fault. See EtherNet event queue.
204	Port 14 Adapter	Resettable Fault	Coast				Bit 7 "DevLogixFlts"	The DeviceLogix adapter has a fault.
205	DPI TransportErr	Alarm 1						A DPI Communication Error has occurred.
210	HW Enbl Jmpr Out	Resettable Fault	Coast				Bit 8 "Board Faults"	A Safety Option module is present and ENABLE Jumper is removed. Install the jumper. This fault occurs only on frames 1…7.

Event No.	Fault/Alarm Text	Type	Fault Action	Configuration Parameter	Auto Reset	Auto Clear	Emerg Prot OVRD	Description/Actions
211	Safety Brd Fault	Resettable Fault	Coast				Bit 8 "Board Faults"	A Safety option module has indicated a fault. Verify that ENABLE Jumper is installed. Reset or power cycle drive. Safe Speed Monitor (20-750-S1): • See P67 [Fault Status] on page 308 for more information on the fault statuses. • See publication 750-RM001 for more information. Safe Torque Off (20-750-S): • If DC power drops below 17V DC "Not Enable" is indicated. • If voltage drops below 11V DC the module faults. • See publication 750-UM002 for more information. ATEX (20-750-ATEX): • Possible hardware damage. • The motor to the thermal sensor is shorted. • Excessive EMC noise due to improper grounding/shielding. • See publication 750-UM003 for more information.
212	Safety Jmpr Out	Resettable Fault	Coast				Bit 8 "Board Faults"	SAFETY Jumper is not installed and a Safety option module is not present. Install the jumper.
213	Safety Jumper In	Resettable Fault	Coast				Bit 8 "Board Faults"	SAFETY Jumper is installed and a Safety option module is present. Remove the jumper.
214	SafetyPortCnflct	Alarm 2						Allowable number of safety options exceeded. Only one safety option module can be installed at a time.
224	Port 4 Comm Loss	Resettable Fault	Coast				Bit 12 "Port 4 Flts"	The device at the port has stopped communicating with the main control board. Verify that the device is present and functional. Verify network connections. Verify options that are installed in ports 4…8 are seated in the port and secured with mounting screws.
225	Port 5 Comm Loss						Bit 13 "Port 5 Flts"	
226	Port 6 Comm Loss						Bit 14 "Port 6 Flts"	
227	Port 7 Comm Loss						Bit 15 "Port 7 Flts"	
228	Port 8 Comm Loss						Bit 16 "Port 8 Flts"	
229	Port 9 Comm Loss						Bit 17 "Port 9 Flts"	
230	Port10 Comm Loss							
231	Port11 Comm Loss							
232	Port12 Comm Loss							
233	Port13 Comm Loss						Bit 6 "ENET PrtFlts"	
234	Port14 Comm Loss						Bit 7 "DevLogixFlts"	
244 245 246 247 248 249 250 251 252 253 254	Port 4 Cfg Port 5 Cfg Port 6 Cfg Port 7 Cfg Port 8 Cfg Port 9 Cfg Port 10 Cfg Port 11 Cfg Port 12 Cfg Port 13 Cfg Port 14 Cfg	Alarm 2						The main control board does not have the correct option in the port. Option may not be compatible with product or MCB firmware must be updated to support it. Option may have to be moved or removed, accept option configuration change.

Event No.	Fault/Alarm Text	Type	Fault Action	Configuration Parameter	Auto Reset	Auto Clear	Emerg Prot OVRD	Description/Actions
264	Port 4 Checksum	Resettable Fault	Coast				Bit 12 "Port 4 Flts"	An option module storage checksum failed. Option data has been set to default values.
265	Port 5 Checksum						Bit 13 "Port 5 Flts"	
266	Port 6 Checksum						Bit 14 "Port 6 Flts"	
267	Port 7 Checksum						Bit 15 "Port 7 Flts"	
268	Port 8 Checksum						Bit 16 "Port 8 Flts"	
269	Port 9 Checksum						Bit 17 "Port 9 Flts"	
270	Port10 Checksum							
271	Port11 Checksum							
272	Port12 Checksum							
273	Port13 Checksum						Bit 6 "ENET PrtFlts"	
274	Port14 Checksum						Bit 7 "DevLogixFlts"	
281	Enet Checksum	Resettable Fault	Coast				Bit 6 "ENET PrtFlts"	EtherNet/IP storage checksum failed. Data set to default values.
282	DLX Checksum	Resettable Fault	Coast				Bit 7 "DevLogixFlts"	DeviceLogix storage checksum failed. Data set to default values.
290	Prev Maint Reset	Alarm 1						Predictive maintenance function has reset an elapsed life parameter.
291	HSFan Life	Configurable		493 [HSFan EventActn]			Bit 8 "Board Faults"	Predictive maintenance function has reached the event level. Perform maintenance.
292	InFan Life	Configurable		500 [InFan EventActn]			Bit 8 "Board Faults"	
293	MtrBrng Life	Configurable		506 [MtrBrngEventActn]			Bit 8 "Board Faults"	
294	MtrBrng Lube	Configurable		510 [MtrLubeEventActn]			Bit 8 "Board Faults"	
295	MachBrng Life	Configurable		515 [MtrBrngEventActn]			Bit 8 "Board Faults"	
296	MachBrng Lube	Configurable		519 [MchLubeEventActn]			Bit 8 "Board Faults"	
300	Emer Ovr Act	---						Emergency Override Active Emergency Override is currently active
301	Emer Ovr Not Act	---						Emergency Override Not Active Emergency Override is not currently active.
307	Port7InvalidCard	Non-Reset Fault	Coast					Option not valid in that port. Remove option module.
308	Port8InvalidCard	Non-Reset Fault	Coast					
310	Regeneration OK	Resettable Fault	Coast					The drive has detected that the 'Regeneration OK' input has transition to an 'inactive' state.

Event No.	Fault/Alarm Text	Type	Fault Action	Configuration Parameter	Auto Reset	Auto Clear	Emerg Prot OVRD	Description/Actions
315	Excess Psn Err	Configurable		Configured with Logix controller.				The absolute maximum Position Error value has been exceeded.
318 319 320	OutCurShare PhU OutCurShare PhV OutCurShare PhW	Alarm 1						There is output current sharing imbalance between parallel inverters in the phase indicated that is greater than 15 % of the inverter rated current.
322	N-1 Operation	Alarm 1		20 (Port 10) [Recfg Acknowledg] 21 (Port 10) [Effctv I Rating]				Drive is operating with fewer inverters than the original parallel configuration.
324	DC Bus Mismatch	Non-Reset Fault	Coast					There is a bus voltage imbalance between parallel inverters that is greater than 50V DC.
327 328 329	HS Temp Imbal U HS Temp Imbal V HS Temp Imbal W	Alarm 1						There is a heatsink temperature imbalance between parallel inverters in the phase indicated that is greater than 11.5 °C (52.7 °F).
331 332 333	I1 Comm Loss I2 Comm Loss I3 Comm Loss	Resettable Fault	Coast					A communications fault has occurred between the main control board and the power layer interface board on inverter *n*.
341 342 343	C1 Comm Loss C2 Comm Loss C3 Comm Loss	Resettable Fault	Coast					A communications fault has occurred between the main control board and the converter gate board on converter *n*.
351 352 353	In Cur Share L1 In Cur Share L2 In Cur Share L3	Alarm 1						There is an input current sharing imbalance between parallel converters in the AC line indicated that is greater than 15 % of the converter rated current.
357 358 359	In Vlt Imbal L12 In Vlt Imbal L23 In Vlt Imbal L31	Alarm 1						There is an input line voltage imbalance between parallel converters in the AC lines indicated that is greater than 5 % of the converter rated voltage.
360	N-1 See Manual	Resettable Fault	Coast				Bit 8 "Board Faults"	The number of active inverters has been reduced from the original parallel configuration. See N-1 and Re-Rate Functions on page 353.
361	Rerate See Manual	Resettable Fault	Coast				Bit 8 "Board Faults"	The drive rating has changed from the original parallel configuration. See N-1 and Re-Rate Functions on page 353.
362	Cnv/Inv Mismatch	Alarm 2						There is a voltage class mismatch between the installed parallel inverters and converters.
363	CBP/Inv Mismatch	Alarm 2						There is a voltage class mismatch between the installed parallel inverters and common DC bus precharge units.
364	CBP Num Mismatch	Alarm 2						The number of active inverters and active common DC bus precharge units does not match.
365	Zero Cnv/ Prechrg	Alarm 2						No converter or common DC bus precharge unit exists.
366	Cnv Num Mismatch	Alarm 2						The number of active inverters and active converters does not match.
371 372	P1 Comm Loss P2 Comm Loss	Resettable Fault	Coast					A communications fault has occurred between the main control board and the DC precharge control board on the common DC bus precharge unit *n*.
380	PWM FPGA Overrun	Alarm 1						The time limit on the PWM write to the FPGA was exceeded.

Event No.	Fault/Alarm Text	Type	Fault Action	Configuration Parameter	Auto Reset	Auto Clear	Emerg Prot OVRD	Description/Actions
900	900	Automatic Drive Reset	Coast					Critical input exception. Contact technical support.
901	Machine Check	Automatic Drive Reset	Coast					Internal error. Replace the main control board.
902	Data Storage Error	Automatic Drive Reset	Coast					Cache memory corrupt. Replace the main control board.
903	Instruction Storage Error	Automatic Drive Reset	Coast					Cache memory corrupt. Replace the main control board.
905	Alignment Error	Automatic Drive Reset	Coast					Pointer is pointing to a non-boundary member. Obtain test points and check grounding.
906	Program Error	Automatic Drive Reset	Coast					Bad memory read. Check grounding or replace the main control board.
907	Floating Point Unit Not On	Automatic Drive Reset	Coast					Firmware issue. Obtain test points.
909	Aux Processor Not On	Automatic Drive Reset	Coast					Auxiliary processor interrupt. Contact technical support.
912	Watchdog	Automatic Drive Reset	Coast					The timer counted down, reached 0, and fault occurred. Replace the main control board.
913	Data TLB Error	Automatic Drive Reset	Coast					Processor attempted to access non-boundary memory. Check grounding or replace the main control board.
914	Instruction TLB Error	Automatic Drive Reset	Coast					Processor attempted to access non-boundary memory. Check grounding or replace the main control board.
916	FPGA Failed to Load	Automatic Drive Reset	Coast					MCB failed to load on powerup. Replace the main control board.
917	FPGA CRC Failure	Resettable Fault (753) Disabled (755 LP) Automatic Drive Reset (755 HP)	Coast	964 [CRC Flt Cfg] 753 only				Change fault configuration (753). Replace the main control board.
918	Control Task Overrun	Automatic Drive Reset	Coast					Carrier frequency changes when passing through 7 Hz. In P40 [Mtr Option Cfg], set the PWM to 2 kHz or turn on the "PWM FreqLock" Bit 9. Or flash the drive to 8.001.
919	System Task Overrun	Automatic Drive Reset	Coast					The control task not finished and being told to run again. If fault does not clear, replace the main control board.
920	5 mSec Task Overrun	Automatic Drive Reset	Coast					The control task not finished and being told to run again. If fault does not clear, replace the main control board.
921	Control Task Stall	Automatic Drive Reset	Coast					Control task stalled. Check grounding or replace the main control board.
922	System Task Stall	Automatic Drive Reset	Coast					System task stalled. Check grounding or replace the main control board.
923	5 mSec Task Stall	Automatic Drive Reset	Coast					5 msec task stalled. Check grounding or replace the main control board.
924	Background Task Stall	Automatic Drive Reset	Coast					Background task stalled. Check grounding or replace the main control board.
925	Stack Overflow	Automatic Drive Reset	Coast					Firmware overflow. Obtain test points.

Event No.	Fault/Alarm Text	Type	Fault Action	Configuration Parameter	Auto Reset	Auto Clear	Emerg Prot OVRD	Description/Actions
926	Ethernet Error	Automatic Drive Reset	Coast					Ethernet error. Contact technical support.
927	CIP Motion Error	Automatic Drive Reset	Coast					Integrated motion error. Contact technical support.
14037	Net IO Timeout	Configurable		52 [DLX Prog Cond]				DeviceLogix has been disabled.

IMPORTANT A module installed in a port generate fault and alarm event numbers 3000…13999. See Fault and Alarm Display Codes on page 319 for an explanation. For event numbers that fall from 13000 to 13999, refer to the PowerFlex 755 Drive Embedded EtherNet/IP Adapter User Manual, publication 750COM-UM001 for descriptions.

Table 11 - Drive Fault and Alarm Cross Reference By Name

Fault/Alarm Text	Number
Adj Vltg Ref	171
Alt VelFdbk Loss	94
AltSpdReg DL Err	202
Analog In Loss	29
Anlg Cal Chksum	108
App ID Changed	124
AutClrFltExhaust	34
AuRsts Exhausted	33
Autn Enc Angle	141
Autn Spd Rstrct	142
Auto Tach Switch	97
AutoTune Aborted	80
Autotune CurReg	143
Autotune Inertia	144
Autotune Travel	145
Aux VelFdbk Loss	95
Auxiliary Input	2
Bipolar Conflict	155
Brake Slipped	26
C1 Comm Loss	341
C2 Comm Loss	342
CBP Num Mismatch	364
CBP/Inv Mismatch	363
Clr Fault Queue	51
Cnv Num Mismatch	366
Cnv/Inv Mismatch	362
Comm Loss Net	280
Ctrl Bd Overtemp	55
CurLimit Reduced	170
DC Bus Mismatch	324
Decel Inhibit	24
DigIn Cfg B	157
DigIn Cfg C	158
DLX Checksum	282
DPI TransportErr	205
Drive OverLoad	64
Drive Powerup	49
DynBrake OvrTemp	10
Emer Ovr Act	300
Emer Ovr Not Act	301
Enet Checksum	281
Excess Psn Err	315
Excessive Load	79

Fault/Alarm Text	Number
Ext Prechrg Err	137
Fwd Spd Lim Cfg	192
Ground Fault	13
Ground Warning	14
Heatsink OvrTemp	8
HeatSinkUnderTmp	168
Home Config	176
Home Not Set	179
Homing Active	178
HS Temp Imbal U	327
HS Temp Imbal V	328
HS Temp Imbal W	329
HSFan Life	291
Hw Enable Check	93
HW Enbl Jmpr Out	210
HW OverCurrent	12
I1 Comm Loss	331
I2 Comm Loss	332
In Cur Share L1	351
In Cur Share L2	352
In Cur Share L3	353
In Vlt Imbal L12	357
In Vlt Imbal L23	358
In Vlt Imbal L31	359
Incompat MCB-PB	106
InFan Life	292
Input Phase Loss	17
Invalid Code	59
IPM OverCurrent	35
IPMSpdEstErr	195
IR Volts Range	77
Ivld Pwr Bd Data	110
IXo VoltageRange	87
Load Loss	15
MachBrng Life	295
MachBrng Lube	296
Module Defaulted	58
Motor Overload	7
Motor PTC Trip	18
MtrBrng Life	293
MtrBrng Lube	294
N-1 Operation	322
N-1 See Manual	360

Fault/Alarm Text	Number
FluxAmpsRef Rang	78
Freq Conflict	185
Fwd End Limit	181

Fault/Alarm Text	Number
Net IO Timeout	14037
No Stop Source	152
NVS Not Blank	102

Fault/Alarm Text	Number
OutCurShare PhU	318
OutCurShare PhV	319
OutCurShare PhW	320
Output PhaseLoss	21
OverSpeed Limit	25
OverVoltage	5
OW Torq Level	66
OW Torq Level Lo	68
P1 Comm Loss	371
P2 Comm Loss	372
Parameter Chksum	100
Phase U to Grnd	38
Phase UNegToGrnd	44
Phase UV Short	41
Phase V to Grnd	39
Phase VNegToGrnd	45
Phase VW Short	42
Phase W to Grnd	40
Phase WNegToGrnd	46
Phase WU Short	43
PM FS Cflct	196
PM FV Alt Fdbk	191
PM FV Pri Fdbk	190
PM Offset Conflict	194
PM Offset Failed	197
Port 1 Adapter	71
Port 1 DPI Loss	81
Port 10 Cfg	250
Port 11 Cfg	251
Port 12 Cfg	252
Port 13 Adapter	203
Port 13 Cfg	253
Port 14 Adapter	204
Port 14 Cfg	254
Port 2 Adapter	72
Port 2 DPI Loss	82
Port 3 Adapter	73
Port 3 DPI Loss	83
Port 4 Adapter	74

Fault/Alarm Text	Number
Port 5 Checksum	265
Port 5 Comm Loss	225
Port 5 DPI Loss	85
Port 6 Adapter	76
Port 6 Cfg	246
Port 6 Checksum	266
Port 6 Comm Loss	226
Port 6 DPI Loss	86
Port 7 Cfg	247
Port 7 Checksum	267
Port 7 Comm Loss	227
Port 8 Cfg	248
Port 8 Checksum	268
Port 8 Comm Loss	228
Port 9 Cfg	249
Port 9 Checksum	269
Port 9 Comm Loss	229
Port10 Checksum	270
Port10 Comm Loss	230
Port11 Checksum	271
Port11 Comm Loss	231
Port12 Checksum	272
Port12 Comm Loss	232
Port13 Checksum	273
Port13 Comm Loss	233
Port14 Checksum	274
Port14 Comm Loss	234
Port7InvalidCard	307
Port8InvalidCard	308
PositionFdbkLoss	96
Power Loss	3
Precharge Open	138
Prev Maint Reset	290
Pri VelFdbk Loss	91
Profiling Active	177
Pump Off	67
PWM FPGA Overrun	380
Port 4 Cfg	244
Port 4 Checksum	264

Fault/Alarm Text	Number
Port 4 Comm Loss	224
Port 4 DPI Loss	84
Port 5 Adapter	75
Port 5 Cfg	245
PWM Freq Reduced	169
Pwr Brd Checksum	104
PwrBd App MinVer	112
PwrBd Invalid ID	111
PwrBd PwrDn Chks	118
PwrDn Data Chksm	117
PwrDn NVS Blank	101
PwrDn NVS Incomp	103
PwrDn Table Full	115
PwrDnEntry2Large	116
Regeneration OK	310
Replaced MCB-PB	107
Rerate See Manual	361
Rev End Limit	182
Rev Spd Lim Cfg	193
Safety Brd Fault	211
Safety Jmpr Out	212
Safety Jumper In	213

Fault/Alarm Text	Number
SafetyPortCnflct	214
Shear Pin 1	61
Shear Pin 2	62
Sleep Config	161
SpdReg DL Err	201
Start On PowerUp	134
SW OverCurrent	36
System Defaulted	48
Task Overrun	19
Torq Prove Cflct	27
TorqPrv Spd Band	20
TP Encls Config	28
Tracking DataErr	113
Travel Lim Cflct	175
Trnsistr OvrTemp	9
UnderVoltage	4
Using Backup App	125
VHz Boost Limit	187
VHz Neg Slope	186
Waking	162
Zero Cnv/Prechrg	365

Inverter (Port 10) Faults and Alarms (Frame 8 and Larger)

Table 12 contains a list of Inverter-specific faults and alarms, the type of fault or alarm, the action that is taken when the drive faults, the parameter that is used to configure the fault or alarm (if applicable), and a description and action (where applicable). See Faults, Alarms, and Configurable Conditions for information on the Auto Reset (Auto Reset Run/Restart) and Auto Clear (Auto Reset Clear) columns in this table.

These faults and alarms only apply to Frame 8 drives and larger.

Table 12 - Inverter Fault and Alarm Types, Descriptions, and Actions

Event No.	Fault/Alarm Text	Type	Fault Action	Configuration Parameter	Auto Reset	Auto Clear	Description/Action(s)
10101 10201 10301	I1 Comm Loss I2 Comm Loss I3 Comm Loss	Non-Reset Fault	Coast				Indicates that the communication connection from the fiber optic interface board to the power layer interface board has been lost. Once the root cause of the communication fault has been resolved, power must be cycled or a drive reset must be initiated to clear this fault. • Verify the status of the Fiber Loss pin segment of the power-layer interface board LED. **ATTENTION:** Hazard of permanent eye damage exists when using optical transmission equipment. This product emits intense light and invisible radiation. Do not look into fiber-optic ports or fiber-optic cable connectors. Remove power from the drive before disconnecting fiber optic cables. • Verify that the fiber optic cables are properly connected to the transceivers. • Verify that the transceivers are properly seated in the ports. • Verify that the fiber optic cable is not cracked or broken. • Verify that power is applied to the fiber optic interface board and power layer interface board.
10102 10202 10302	I1 Thermal Const I2 Thermal Const I3 Thermal Const	Non-Reset Fault	Coast				The thermal model data sent to the power layer interface board is incorrect. • Verify that the inverter is the correct rating for the drive. • Compare the firmware revisions of the power layer interface and control board for compatibility. • If necessary, reflash the application firmware in control board.
10103 10203 10303	I1 HSFan Slow I2 HSFan Slow I3 HSFan Slow	Alarm 1					The inverter heatsink fan is running below normal operating speed. • Verify the actual fan speed in [*In* HSFan Speed] (Port 10). • Check for debris in the fan. If necessary, clean the fan and housing. • Check for noise at the fan, indicating motor bearing failure. • Verify that the fan power and feedback connections are not loose or disconnected. • Replace the fan, if necessary.

Event No.	Fault/Alarm Text	Type	Fault Action	Configuration Parameter	Auto Reset	Auto Clear	Description/Action(s)
10104 10204 10304	I1 Overcurr UPos I2 Overcurr UPos I3 Overcurr UPos	Resettable Fault	Coast		Y	Y	An instantaneous overcurrent (IOC) has occurred in the U, V, or W phase, positive or negative leg. • Reduce the mechanical load. • Check the motor and connections. • With motor disconnected, run the drive in open loop, in V/Hz mode and check for sufficient output phase-to-phase voltages. If an IOC occurs immediately after restarting the drive, check the appropriate current sensor. • Check the power and signal connections to the gate driver board for the phase that is identified, or replace it. The IGBT could also have failed open (and the opposite leg is receiving excess current).
10105 10205 10305	I1 Overcurr UNeg I2 Overcurr UNeg I3 Overcurr UNeg						
10106 10206 10306	I1 Overcurr VPos I2 Overcurr VPos I3 Overcurr VPos						
10107 10207 10307	I1 Overcurr VNeg I2 Overcurr VNeg I3 Overcurr VNeg						
10108 10208 10308	I1 Overcurr WPos I2 Overcurr WPos I3 Overcurr WPos						
10109 10209 10309	I1 Overcurr WNeg I2 Overcurr WNeg I3 Overcurr WNeg						
10110 10210 10310	I1 Bus Overvolt I2 Bus Overvolt I3 Bus Overvolt	Resettable Fault	Coast		Y	Y	The DC bus has exceeded the maximum value. • Verify the correct voltage on the AC input line. • Reduce the mechanical load and/or rate of deceleration. • Compare the DC bus voltage displayed in [I*n* DC Bus Volt] (port 10), in [C*n* DC Bus Volt] (port 11), and with a meter using the DC+ and DC- test points at the top of the inverter. If the measurements do not match, the components that are used for DC bus voltage feedback sensing can be damaged or incorrect. Replace the power supply, power control, and power-layer interface circuit boards.
10111 10211 10311	I1 Ground Fault I2 Ground Fault I3 Ground Fault	Resettable Fault	Coast		Y	Y	A current path to earth ground greater than 25 % of drive rating has occurred. • Perform a Megger or surge test on a disconnected motor. Replace the motor, if necessary. • Check the output phase current displayed in [I*n* U Phase Curr], [I*n* V Phase Curr], and [I*n* W Phase Curr] (port 10) for an imbalance. [I*n* Gnd Current] (port 10) is the calculated (not measured) ground current based on the phase currents. • If the ground fault happens immediately when the drive is started, view the values of the output phase current parameters (noted in the second bullet) when running the drive with a light load or perform a trending analysis. • Reseat the rating plug and current transducer wiring harness.
10112 10212 10312	I1 IGBT OvrTemp I2 IGBT OvrTemp I3 IGBT OvrTemp	Resettable Fault	Coast		Y	Y	An IGBT over temperature has been detected. This power layer interface board calculated this value based on the NTC temperature plus a rise based on recent currents through the inverter. • Check the NTC temperature that is displayed in [I*n* Heatsink Temp] (port 10) and verify that it is not near the limit. If this value is near the limit, check for cooling problems caused by a blocked or slow heatsink fan. • Check the output phase current displayed in [I*n* U Phase Curr], [I*n* V Phase Curr], and [I*n* W Phase Curr] (port 10) for an imbalance. • Check for high-current operation at low speeds, since nearly all current goes through one IGBT in this case. • Replace the power layer interface board.
10113 10213 10313	I1 HS OvrTemp I2 HS OvrTemp I3 HS OvrTemp	Resettable Fault	Coast		Y	Y	A heatsink over temperature has occurred in inverter 1. • Verify that the NTC is not disconnected or shorted. • Check for cooling problems - the heatsink cooling fan is running slow, the enclosure filter or heatsink fins are dirty, or the ambient temperature is too high. • Check the NTC resistance with a meter. If the resistance is correct, replace the power layer interface board.

Event No.	Fault/Alarm Text	Type	Fault Action	Configuration Parameter	Auto Reset	Auto Clear	Description/Action(s)
10114 10214 10314	I1 Main PS Low I2 Main PS Low I3 Main PS Low	Resettable Fault	Coast				The main power supply is producing a low voltage. The inverter power board provides +/- 24V for the stirring fans, LEMs, and floating supply for the gate driver boards. This fault can occur during a power-down sequence. • If this fault occurs when the drive is started, check the stirring fans for a short. • Disconnect the individual loads that are powered by this board and look for a short or excessive current. • Replace the inverter power supply board.
10115 10215 10315	I1 IPwrIF PS Low I2 IPwrIF PS Low I3 IPwrIF PS Low	Resettable Fault	Coast				The local power supply is producing a low voltage. The inverter power supply board generates +/-12V from the system power supply and provides power to the power control and power layer interface (PLI) boards. • Check for a short on the power layer interface or backplane board and replace as necessary. • If no short is present on the power layer interface or backplane board, replace the inverter power board.
10116 10216 10316	I1 Sys PS Low I2 Sys PS Low I3 Sys PS Low	Alarm 1					A system power supply under voltage has occurred. • Using a meter, check for 24V on the inverter power supply board. Replace the board if necessary.
10117 10217 10317	I1 SysPS Overcur I2 SysPS Overcur I3 SysPS Overcur	Resettable Fault	Coast				A system power supply over current has occurred. This fault can occur during a power-down sequence. • Check the wiring harness from the inverter power supply board to the converter gate firing board and control pod for shorts/reversals. • Check for a short on incoming power to the converter gate firing board or fiber interface board. • Disconnect P6 on the inverter power board to remove the load from this power supply. If the breaker remains tripped, replace the inverter power supply board.
10118 10218 10318	I1 HSFan PS Low I2 HSFan PS Low I3 HSFan PS Low	Alarm 1					A heatsink fan power-supply undervoltage has occurred. • Check for 230V supply on the inverter power supply board at connector P6. If there is voltage, replace the inverter power supply board. • If there is no voltage, check the control power transformer, its primary and secondary fuses, and wiring harness.
10119 10219 10319	I1 CT Harness I2 CT Harness I3 CT Harness	Non-Reset Fault	Coast				The drive has detected a connection loss to a current transducer. • Verify that the current transducer wiring harness is connected to J22, J23, and J24 on the power interface board.
10120 10220 10320	I1 PLI OvrTemp I2 PLI OvrTemp I3 PLI OvrTemp	Resettable Fault	Coast		Y	Y	The power-layer interface circuit board is over temperature. • Verify that the ambient temperature is not too high. • Verify that the stirring fans are operational. • Check the temperature sensor test point on the power layer interface board to verify that the output is within range. If necessary, replace the power layer interface board.
10121 10221 10321	I1 PSBrd OvrTemp I2 PSBrd OvrTemp I3 PSBrd OvrTemp	Resettable Fault	Coast		Y	Y	The power supply board is over temperature. • Verify that the ambient temperature is not too high. • Verify that the stirring fans are operational. • Check the temperature sensor test point on the power layer interface board to verify that the output is within range. The temperature sensor is on the inverter power supply board but the A/D processing is on the power layer interface board. If necessary, replace the inverter power supply board. If this problem persists after replacing the inverter power supply board, replace the power layer interface board.
10122 10222 10322	I1 InFan1 Slow I2 InFan1 Slow I3 InFan1 Slow	Alarm 1 / Resettable Fault					Stirring fan 1 is under speed. • Visually verify that fan 1 is turning. • Check the measured fan speed displayed in [I*n* InFan *n* Speed] (port 10). • Check the wiring harness to the stirring fans to verify that the power and tachometer signals are connected. • If necessary, replace both stirring fans. When the fans are replaced, the elapsed hours, displayed in [I*n* PredMainReset] (port 10) must be reset.
10123 10223 10323	I1 InFan2 Slow I2 InFan2 Slow I3 InFan2 Slow						

Event No.	Fault/Alarm Text	Type	Fault Action	Configuration Parameter	Auto Reset	Auto Clear	Description/Action(s)
10124 10224 10324	I1 NTC Open I2 NTC Open I3 NTC Open	Non-Reset Fault	Coast				An NTC open condition has occurred. • Check the ribbon cable that runs between the backplane board and gate driver board for loose connections or damage. The capacitor bank must be removed to check this cable. • If the drive is located in cold conditions, raise the ambient temperature. • Check the power-layer interface board testpoints for the individual phase NTC temperatures to determine which is open. • Reseat the power layer interface board. If this problem persists, replace the power layer interface board.
10125 10225 10325	I1 Incompat UBrd I2 Incompat UBrd I3 Incompat UBrd	Non-Reset Fault	Coast				The power layer interface and power control board do not detect the correct gate driver board on the U, V, or W phase. This fault can occur during a power-down sequence. • Check the ribbon cable that runs between the backplane board and gate driver board for loose connections or damage and verify that the correct gate driver board is installed. The capacitor bank must be removed to check this cable and the board. • Reflash the control board. • Check the rating plug.
10126 10226 10326	I1 Incompat VBrd I2 Incompat VBrd I3 Incompat VBrd						
10127 10227 10327	I1 Incompat WBrd I2 Incompat WBrd I3 Incompat WBrd						
10128 10228 10328	I1 Incompat Brdn I2 Incompat Brdn I3 Incompat Brdn	Non-Reset Fault	Coast				The drive detected an incompatible burden resistor. • Verify that the correct rating plug is installed. Reseat the rating plug.
10129 10229 10329	I1 DC Bus Imbal I2 DC Bus Imbal I3 DC Bus Imbal	Resettable Fault	Coast				Either the lower or upper leg of the capacitor bank is getting too much voltage (based on the bus voltage, measured voltage across the lower leg, and a calculation to find the voltage across the upper leg) or the voltage sensing components are damaged. • Check the value of the bus bleeder resistor and bus balancing resistor and replace as necessary. • Inspect the capacitor bank for leakage or damage and replace as necessary. Replacing the capacitor bank assembly also replaces the bus balancing resistor.  **ATTENTION:** The DC bus voltage can only be measured when the drive is energized. Servicing energized equipment can be hazardous. Severe injury or death can result from electrical shock, burn, or unintended actuation of controlled equipment. Follow Safety related practices of NFPA 70E, ELECTRICAL SAFETY FOR EMPLOYEE WORKPLACES. DO NOT work alone on energized equipment! • Measure the voltage on each half of the bus to confirm the calculations. If the bus measurements aren't correct, replace the power interface board and/or inverter power supply board.
10130 10230 10330	I1 Curr Offset I2 Curr Offset I3 Curr Offset	Alarm 1					The calculated current offset for any phase is larger than expected. • Check the current sensor offset reading inverter testpoint and power supply. If necessary, replace the current sensor. • If this problem persists, replace the inverter power supply board and/or the power layer interface board.
10131 10231 10331	I1 Fault Q Full I2 Fault Q Full I3 Fault Q Full	Resettable Fault	Coast				The fault queue is full. There are at least three other faults in the queue. Troubleshooting and clearing the existing faults makes room for additional faults in the queue (if any). This fault can occur during a power-down sequence.

Event No.	Fault/Alarm Text	Type	Fault Action	Configuration Parameter	Auto Reset	Auto Clear	Description/Action(s)
10132 10232 10332	I1 Incompat PS I2 Incompat PS I3 Incompat PS	Resettable Fault	Coast				The drive has detected an incompatible power supply for the drive AC input rating. • Check the power supply and replace it if incorrect. • If the power supply is correct, reflash the control board. • If this problem persists, replace the inverter power supply board or power layer interface board.
10134 10234 10334	I1 UBrd Fault I2 UBrd Fault I3 UBrd Fault	Resettable Fault	Coast				The power supply on the U, V, or W phase gate driver board has failed. • If this fault occurred on this phase only, replace the appropriate gate driver board. • If this fault occurred on all three phases, check the 24V power supply on the inverter power supply board that feeds the gate driver boards and replace the inverter power supply board if necessary.
10135 10235 10335	I1 VBrd Fault I2 VBrd Fault I3 VBrd Fault						
10136 10236 10336	I1 WBrd Fault I2 WBrd Fault I3 WBrd Fault						
10137 10237 10337	I1 Flash Failed I2 Flash Failed I3 Flash Failed	Resettable Fault	Coast				This fault will be asserted if an attempt to flash the FPGA configuration device fails.
10138 10238 10338	I1 Powering Down I2 Powering Down I3 Powering Down	Resettable Fault	Coast				This fault will be asserted at 80% of the rated DC bus voltage.

Converter (Port 11) Faults and Alarms (Frame 8 and Larger)

Table 13 contains a list of Converter-specific faults and alarms, the type of fault or alarm, the action that is taken when the drive faults, the parameter that is used to configure the fault or alarm (if applicable), and a description and action (where applicable). See Faults, Alarms, and Configurable Conditions for information on the Auto Reset (Auto Reset Run/Restart) and Auto Clear (Auto Reset Clear) columns in this table. These faults and alarms only apply to Frame 8 drives and larger.

Table 13 - Converter Fault and Alarm Types, Descriptions, and Actions

Event No.	Fault/Alarm Text	Type	Fault Action	Configuration Parameter	Auto Reset	Auto Clear	Description/Action(s)
11101 11201 11301	C1 Precharge C2 Precharge C3 Precharge	Alarm 1					1. The AC line voltage is in the range of 50...300V (for 400V class drives) or 50...400V (for 600V class drives). Precharge begins when the AC line voltage reaches 300V or 400V. 2. The drive has been in precharge for more than 12 seconds. If the "C*n* Precharge" alarm persists for more than 30 seconds the drive will fault. Following powerup or a fault reset, the converter does not issue any voltage-related alarms until the AC input voltage exceeds 50V to prevent an alarm when a customer-supplied auxiliary power supply is used. 3. The DC bus open circuit test can be cycling. If this test cycles for more than 10 seconds, event 144/244 "C*n* DC Bus Open" occurs. Alarm: • Check the line voltage displayed in [C*n* L12 Line Volt], [C*n* L23 Line Volt], and [CV L31 Line Volt] (port 11). • Check the phase current displayed in [C*n* L1 Phase Curr], [C*n* L2 Phase Curr], and [C*n* L3 Phase Curr] (port 11) and the bus voltage in [C*n* DC Bus Volt] (port 11). Line current, line voltage, and bus voltage sensing are all performed on the converter gate firing board. If this alarm persists, replace the converter gate firing board. Fault: • Verify that the current transducers have not all failed. If necessary, replace all three current transducers. • Verify that the DC link inductor has not failed. If necessary, replace the DC link choke. • Verify that the converter line and DC bus wiring is connected. • Verify that the capacitor bank is properly installed and connected.
		Non-Reset Fault	Coast				
11102 11202 11302	C1 Phase Loss L1 C2 Phase Loss L1 C3 Phase Loss L1	Alarm 1					The AC line-to-line voltages are imbalanced, indicating an open AC input phase. • Check for an upstream AC line loss. • Verify that the AC input line wiring is properly connected. • Check the wiring harness to the converter gate firing board for loose connections and/or damage. If necessary, replace the converter gate-firing board wiring harness.
11103 11203 11303	C1 Phase Loss L2 C2 Phase Loss L2 C3 Phase Loss L2						
11104 11204 11304	C1 Phase Loss L3 C2 Phase Loss L3 C3 Phase Loss L3						
11111 11211 11311	C1 SCR OvrTemp C2 SCR OvrTemp C3 SCR OvrTemp	Alarm 1					An alarm occurs if the calculated SCR temperature exceeds 125 °C (257 °F) and a fault occurs when the calculated SCR temperature exceeds 135 °C (275 °F). • Check for cooling problems - the heatsink cooling fan is running slow, the enclosure filter or heatsink fins are dirty, or the ambient temperature is too high.
		Resettable Fault	Coast		Y	Y	
11112 11212 11312	C1 HS OvrTemp C2 HS OvrTemp C3 HS OvrTemp	Alarm 1					An alarm when the heatsink temperature exceeds 95 °C (203 °F) and a fault when the heatsink temperature exceeds 100 °C (212 °F). • Check the NTC for a short or verify that it is connected. • Measure the resistance of the NTC. The reading should be approximately 11.5 Ω, at room temperature. • Check for cooling problems - the heatsink cooling fan is running slow, the enclosure filter or heatsink fins are dirty, or the ambient temperature is too high.
		Resettable Fault	Coast		Y	Y	

Event No.	Fault/Alarm Text	Type	Fault Action	Configuration Parameter	Auto Reset	Auto Clear	Description/Action(s)
11113 11213 11313	C1 TVSS Blown C2 TVSS Blown C3 TVSS Blown	Alarm 1					The MOV block is reporting that the transient voltage suppression system (TVSS) has blown. • Check the MOV wiring harness for loose connections and/or damage and replace if necessary. • Replace the MOV block. • If the MOV block is not blown and the wiring harness is properly connected and not damaged, replace the converter gate firing board.
11114 11214 11314	C1 Blower Speed C2 Blower Speed C3 Blower Speed	Alarm 1					The converter cooling fan is running below normal operating speed. • Check for debris in the fan. If necessary, clean the fan and housing. • Check for noise at the fan, indicating motor bearing failure. • Verify that the fan power and feedback connections are not loose or disconnected. • Replace the fan, if necessary.
11115 11215 11315	C1 Line Dip C2 Line Dip C3 Line Dip	Alarm 1					The bus voltage has fallen below the value specified in P451 [Pwr Loss A Level] or P454 [Pwr Loss B Level] (port 0) minus 20 volts. Until the converter has established communications with the main control board, this value defaults to 180V below the converter bus memory. The converter stops firing the SCRs until the nominal value of the DC bus voltage for the present AC line voltage is within 60 volts of P12 [DC Bus Memory] (port 0). If the line dip condition persists for more than 60 seconds the alarm becomes a fault. • Verify the power wiring connections. • Compare the actual DC bus voltage to the value displayed in [C*n* DC Bus Volt]. If the values are different, replace the converter gate firing board.
		Resettable Fault	Coast		Y	Y	
11116 11216 11316	C1 Minimum Line C2 Minimum Line C3 Minimum Line	Alarm 1					The AC line voltage is less than 280V (for a 400V class drive) / 400V (for a 600V class drive). • The AC line voltage must exceed 320V / 440V to recover from this alarm.
11117 11217 11317	C1 Line Freq C2 Line Freq C3 Line Freq	Alarm 1					The measured line frequency is out of the range (below 40 Hz, or above 65 Hz). This alarm becomes a fault if the condition persists for more than 30 seconds. • Check the incoming power line frequency. • Check the wiring harness to the converter gate firing board for loose connections and/or damage and replace if necessary. • If the wiring harness is properly connected and not damaged, replace the converter gate firing board.
		Resettable Fault	Coast				
11118 11218 11318	C1 Single Phase C2 Single Phase C3 Single Phase	Alarm 1					The converter was intentionally powered up in single-phase mode with only AC phase L1-L2 present. Intentional single-phase mode is only detected at the initial application of AC line voltage. Application of 3-phase voltage after the converter has entered single-phase mode results in the single phase alarm becoming a fault. • Verify that only one phase is applied to a drive in single-phase mode.
		Resettable Fault	Coast				
11134 11234 11334	C1 Overcurrent C2 Overcurrent C3 Overcurrent	Resettable Fault	Coast				The peak AC input current has exceeded 3000 A for five line cycles. • Verify that the current transducers are connected. • Check the wiring harness to the converter gate firing board for loose connections or damage and replace if necessary. • If the current transducers are properly connect and the wiring harness for the gate firing board is OK, replace the converter gate firing board. • Check for an open SCR or DC bus short.
11135 11235 11335	C1 Ground Fault C2 Ground Fault C3 Ground Fault	Resettable Fault	Coast		Y	Y	The converter input ground current (peak) has exceeded the threshold set P16 [Gnd Cur Flt Lvl] (port 11) for 5 line cycles. A possible internal short in the drive between a phase, ground, or the DC bus can have occurred. • Verify that the current transducer wiring harness is connected to the converter gate firing board and that they are functioning properly. If necessary, replace all three current transducers (CTs). • If the current transducer wiring harness is connected and the CTs are functioning properly, replace the converter gate firing board. • To determine if there is an imbalance between the phases, view the input phase current values in [C*n* L1 Phase Curr], [C*n* L2 Phase Curr], and [C*n* L3 Phase Curr] (port 11). [C*n* Gnd Current] (port 11) is the calculated (not measured) ground current based on the phase currents. If necessary, use trending when the ground fault occurs upon drive power-up.

Event No.	Fault/Alarm Text	Type	Fault Action	Configuration Parameter	Auto Reset	Auto Clear	Description/Action(s)
11136 11236 11336	C1 HS NTC Open C2 HS NTC Open C3 HS NTC Open	Non-Reset Fault	Coast				The converter heatsink NTC is open. The heatsink NTC is mounted on the converter heatsink and is wired to the converter gate firing board. An open NTC is assumed when the heatsink temperature is below -40 °C (-40 °F). • Check for loose connections or damage to the NTC wiring harness. • Measure the resistance of the NTC and verify that it is within range. • If the NTC wiring harness and resistance measurement is OK, replace the converter gate firing board.
11137 11237 11337	C1 HS NTC Short C2 HS NTC Short C3 HS NTC Short	Non-Reset Fault	Coast				The converter heatsink NTC is shorted. The heatsink NTC is mounted on the converter heatsink and is wired to the converter gate firing board. A shorted NTC is assumed when the heatsink temperature is above 200 °C (392 °F). • Check for loose connections or damage to the NTC wiring harness. • Measure the resistance of the NTC and verify that it is within range. • If the NTC wiring harness and resistance measurement is OK, replace the converter gate firing board.
11138 11238 11338	C1 Brd OvrTemp C2 Brd OvrTemp C3 Brd OvrTemp	Resettable Fault	Coast		Y	Y	The gate firing board is over temperature. This fault occurs when the gate firing board temperature exceeds 70 °C (158 °F). • Check the cabinet fan wiring harness for loose connections or damage and that the fan is running. If necessary, replace the fan wiring harness and/or fan. • Lower the ambient temperature. • Replace the converter gate firing board.
11139 11239 11339	C1 Brd NTC Open C2 Brd NTC Open C3 Brd NTC Open	Non-Reset Fault	Coast				The converter gate firing board NTC is open. An open NTC is assumed when the temperature is below -40 °C (-40 °F). • Replace the converter gate firing board.
11140 11240 11340	C1 Brd NTC Short C2 Brd NTC Short C3 Brd NTC Short	Non-Reset Fault	Coast				The converter gate firing board NTC is shorted. A shorted NTC is assumed when the temperature is above 200 °C (392 °F). • Replace the converter gate firing board.
11141 11241 11341	C1 Power Supply C2 Power Supply C3 Power Supply	Resettable Fault	Coast				A power supply input voltage (24V input and/or +/-12V internal supply) is operating outside of the acceptable range. • Check input power to the converter gate firing board. The following thresholds are used: 24V is below 20.1V 12V is below 10.0V 12V is above 15.0V -12V is above -10.0V • If the power supply voltage is within the acceptable range, replace the converter gate firing board.
11142 11242 11342	C1 Comm Loss C2 Comm Loss C3 Comm Loss	Resettable Fault	Coast				The converter gate firing board lost communications (through the power layer interface board) to the main control board. Once the root cause of the communication fault has been resolved, power must be cycled or a drive reset must be initiated to clear this fault. **ATTENTION:** Hazard of permanent eye damage exists when using optical transmission equipment. This product emits intense light and invisible radiation. Do not look into fiber-optic ports or fiber-optic cable connectors. Remove power from the drive before disconnecting fiber optic cables. • Verify that the fiber optic cables are properly connected to the transceivers. • Verify that the transceivers are properly seated in the ports. • Verify that the fiber optic cable is not cracked or broken. • Verify that power is applied to the fiber optic interface board, gate firing board, and power layer interface board. If necessary, replace the fiber optic interface, gate firing board, and/or power layer interface board.
11143 11243 11343	C1 Firmware Flt C2 Firmware Flt C3 Firmware Flt	Non-Reset Fault	Coast				A firmware fault has occurred. • Reset the drive. If this fault persists, replace the converter gate firing board.

Event No.	Fault/Alarm Text	Type	Fault Action	Configuration Parameter	Auto Reset	Auto Clear	Description/Action(s)
11144 11244 11344	C1 DC Bus Open C2 DC Bus Open C3 DC Bus Open	Non-Reset Fault	Coast				The DC bus voltage did not rise above 12V (for 400V class drives) or 20V (for 600V class drives) as the SCRs began to ramp on. In this case, the converter tries to turn on the SCRs for approximately 10 seconds before issuing this fault. Event 101/201 "C*n* Precharge" is issued following the first retry. • Verify that the current transducers have not all failed. If necessary, replace all three current transducers. • Verify that the DC link inductor has not failed. If necessary, replace the DC link choke. • Verify that the converter line and DC bus wiring is connected. • Verify that the capacitor bank is properly installed and connected.
11145 11245 11345	C1 DC Bus Short C2 DC Bus Short C3 DC Bus Short	Non-Reset Fault	Coast				The peak current has exceeded 150 % of the converter rating during the precharge sequence. Peak charging current is normally limited to 50 % of the converter rating. • Check for a DC bus short, internally and externally. • Verify that the wiring harness to P10 on the converter gate firing board is connected and not damaged. Replace the harness as necessary. • Verify that the capacitor bank is properly installed and connected. • Check for an IGBT short and replace as necessary.
11146 11246 11346	C1 CT Harness C2 CT Harness C3 CT Harness	Non-Reset Fault	Coast				A current transducer (CT) wiring harness connection loss has been detected. • Verify that the CT wiring harness is not damaged and is connected to P6 on the converter gate firing board. Replace the wiring harness if necessary. • If this problem persists, replace the converter gate firing board.
11147 11247 11347	C1 LFuse Harness C2 LFuse Harness C3 LFuse Harness	Non-Reset Fault	Coast				A line-fuse wiring harness connection loss has been detected. • Verify that the line fuse wiring harness is not damaged and is connected to P7 on the converter gate firing board. Replace the wiring harness if necessary. • If this problem persists, replace the converter gate firing board.
11148 11248 11348	C1 Line Fuse L1 C2 Line Fuse L1 C3 Line Fuse L1	Non-Reset Fault	Coast				The line fuse for Line *n* has blown. • Check the fuse and replace if necessary. • Verify that the line fuse wiring harness for line 1 is not damaged and is connected to P7 on the converter gate firing board. Replace the wiring harness if necessary. • If this problem persists, replace the converter gate firing board.
11149 11249 11349	C1 Line Fuse L2 C2 Line Fuse L2 C3 Line Fuse L2						
11150 11250 11350	C1 Line Fuse L3 C2 Line Fuse L3 C3 Line Fuse L3						
11157 11257 11357	C1 BFuse Harness C2 BFuse Harness C3 BFuse Harness	Non-Reset Fault	Coast				A bus-fuse wiring harness connection loss has been detected. • Check the bus fuse harness and replace if necessary. • If this problem persists, replace the converter gate firing board.
11158 11258 11358	C1 BFuse Pos C2 BFuse Pos C3 BFuse Pos	Non-Reset Fault	Coast				The DC+ bus fuse is blown. • Check the DC+ bus fuse and wiring harness and replace if necessary. • If this problem persists, replace the converter gate firing board.
11159 11259 11359	C1 BFuse Neg C2 BFuse Neg C3 BFuse Neg	Non-Reset Fault	Coast				The DC- bus fuse is blown. • Check the DC- bus fuse and wiring harness and replace if necessary. • If this problem persists, replace the converter gate firing board.
11160 11260 11360	C1 Command Stop C2 Command Stop C3 Command Stop	Resettable Fault	Coast		Y	Y	The main control board has commanded the converter gate firing board to stop due to an asymmetrical bus condition. • Check the DC bus connections and wiring.

Event No.	Fault/Alarm Text	Type	Fault Action	Configuration Parameter	Auto Reset	Auto Clear	Description/Action(s)
11161 11261 11361	C1 AC Line High C2 AC Line High C3 AC Line High	Resettable Fault	Coast				The AC line voltage has exceeded 565V (for 400V class drives) or 815V (for 600V class drives), which corresponds to the nominal bus voltage of 799V DC (for 400V class drives) or 1150V DC (for 600V class drives). This fault is intended to protect the capacitor bank from an overvoltage condition especially if a 400V class drive is inadvertently placed in a 600V system. • Verify the incoming line voltage.
11162 11262 11362	C1 Line Loss C2 Line Loss C3 Line Loss	Resettable Fault	Coast		Y	Y	An AC line loss has occurred. • Monitor the incoming AC line for low voltage or line power interruption.
11163 11263 11363	C1 Fault Q Full C2 Fault Q Full C3 Fault Q Full	Resettable Fault	Coast				The fault queue is full. There are at least three other faults in the queue. • Troubleshooting and clearing the existing faults make room for additional faults in the queue (if any).

Precharge (Port 11) Faults and Alarms (Frame 8 and Larger)

Table 14 contains a list of Precharge-specific faults and alarms, the type of fault or alarm, the action that is taken when the drive faults, the parameter that is used to configure the fault or alarm (if applicable), and a description and action (where applicable). See Faults, Alarms, and Configurable Conditions for information on the Auto Reset (Auto Reset Run/Restart) and Auto Clear (Auto Reset Clear) columns in this table. These faults and alarms only apply to Frame 8 drives and larger.

Table 14 - Converter Fault and Alarm Types, Descriptions, and Actions

Event No.	Fault/Alarm Text	Type	Fault Action	Configuration Parameter	Auto Reset	Auto Clear	Description/Action(s)
11101 11201 11301	P1 Precharge P2 Precharge P3 Precharge	Alarm 1					The DC bus delta voltage (Vbus_in - Vbus_out) is greater than 25V when the molded case switch (MCS) is open. This alarm is suppressed when the Precharge Fault is present.
		Resettable Fault	Coast				The DC bus voltage did not meet the conditions that are required to close the molded case switch (MCS) within the timeout period. 1. DC bus input is not overvoltage 2. DC bus input is not undervoltage 3. DC bus delta voltage (Vbus_in - Vbus_out) is less than 25V
11115 11215 11315	P1 Bus Dip P2 Bus Dip P3 Bus Dip	Alarm 1					Only occurs when the drive is offline or in stand-alone mode. The bus voltage has dipped more than 180V below the drive bus memory. The alarm is released when the bus voltage rises back to within 60V of the drive bus memory.
11119 11219 11319	P1 240 V AC Loss P2 240 V AC Loss P3 240 V AC Loss	Alarm 1					240V AC not present while the drive is in the inactive state. This alarm is suppressed when the 240V AC Loss Fault is present.
		Resettable Fault	Coast				240V AC was lost while in the active state. Active state whenever the drive is not stopped, for example, the molded case switch (MCS) is opening or closing or is closed.
11120 11220 11320	P1 240V AC Discon P2 240V AC Discon P3 240V AC Discon	Alarm 1					The 240V AC disconnect is open when the precharge controller is in the ready state (MCS is not closed).
11121 11221 11321	P1 Bus Undervolt P2 Bus Undervolt P3 Bus Undervolt	Alarm 1					The input bus voltage is below 400V DC while the molded case switch (MCS) is open. Hysteresis level 420V DC. This alarm is suppressed when the Bus Undervoltage Fault is present.
		Resettable Fault	Coast				The bus input voltage fell below 400V while the molded case switch (MCS) was closed. Hysteresis level at 420V. The system SMPS cuts out near 340V DC.
11122 11222 11322	P1 Bus Overvolt P2 Bus Overvolt P3 Bus Overvolt	Alarm 1					The input bus voltage exceeds 820V DC. Hysteresis level 800V DC.
11123 11223 11323	P1 Door Open P2 Door Open P3 Door Open	Alarm 1					Door closure contact is open.
11130 11230 11330	P1 MCS ShuntTrip P2 MCS ShuntTrip P3 MCS ShuntTrip	Resettable Fault	Coast				The molded case switch (MCS) auxiliary contact did not open within 1 second following the shunt trip coil activation.
11131 11231 11331	P1 MCS CloseFail P2 MCS CloseFail P3 MCS CloseFail	Resettable Fault	Coast				The molded case switch (MCS) auxiliary contact did not close within 2 seconds following the close coil activation.
11132 11232 11332	P1 MCSAuxContact P2 MCSAuxContact P3 MCSAuxContact	Resettable Fault	Coast				The molded case switch (MCS) auxiliary contact was open when the MCS was closed or closed when the MCS was open. If the MCS Failed to Close Fault is present, then this fault is not reported.
11133 11233 11333	P1 MCS Closed P2 MCS Closed P3 MCS Closed	Resettable Fault	Coast				The voltage across the molded case switch (MCS) when it was closed exceeded 10V.

Event No.	Fault/Alarm Text	Type	Fault Action	Configuration Parameter	Auto Reset	Auto Clear	Description/Action(s)
11138 11238 11338	P1 Brd Overtemp P2 Brd Overtemp P3 Brd Overtemp	Resettable Fault	Coast		Y	Y	The gate firing board is over temperature. This fault occurs when the gate firing board temperature exceeds 70 °C (158 °F). • Check the cabinet fan wiring harness for loose connections or damage and that the fan is running. If necessary, replace the fan wiring harness and/or fan. • Lower the ambient temperature. • Replace the converter gate firing board.
11139 11239 11339	P1 Brd NTC Open P2 Brd NTC Open P3 Brd NTC Open	Non-Reset Fault	Coast				The converter gate firing board NTC is open. An open NTC is assumed when the temperature is below -40 °C (-40 °F). • Replace the converter gate firing board.
11140 11240 11340	P1 Brd NTC Short P2 Brd NTC Short P3 Brd NTC Short	Non-Reset Fault	Coast				The converter gate firing board NTC is shorted. A shorted NTC is assumed when the temperature is above 200 °C (392 °F). • Replace the converter gate firing board.
11141 11241 11341	P1 Power Supply P2 Power Supply P3 Power Supply	Resettable Fault	Coast				A power supply input voltage (24V input and/or +/-12V internal supply) is operating outside of the acceptable range. • Check input power to the converter gate firing board. The following thresholds are used: 24V is below 20.1V 12V is below 10.0V 12V is above 15.0V -12V is above -10.0V • If the power supply voltage is within the acceptable range, replace the converter gate firing board.
11142 11242 11342	P1 Comm Loss P2 Comm Loss P3 Comm Loss	Resettable Fault	Coast				The converter gate firing board lost communications (through the power layer interface board) to the main control board. Once the root cause of the communication fault has been resolved, power must be cycled or a drive reset must be initiated to clear this fault.  **ATTENTION:** Hazard of permanent eye damage exists when using optical transmission equipment. This product emits intense light and invisible radiation. Do not look into fiber-optic ports or fiber-optic cable connectors. Remove power from the drive before disconnecting fiber-optic cables. • Verify that the fiber optic cables are properly connected to the transceivers. • Verify that the transceivers are properly seated in the ports. • Verify that the fiber optic cable is not cracked or broken. • Verify that power is applied to the fiber optic interface board, gate firing board, and power layer interface board. If necessary, replace the fiber optic interface, gate firing board, and/or power layer interface board.
11143 11243 11343	P1 Firmware Flt P2 Firmware Flt P3 Firmware Flt	Non-Reset Fault	Coast				A firmware fault has occurred. • Reset the drive. If this fault persists, replace the converter gate firing board.
11145 11245 11345	P1 DC Bus Short P2 DC Bus Short P3 DC Bus Short	Non-Reset Fault	Coast				The peak current has exceeded 150 % of the converter rating during the precharge sequence. Peak charging current is normally limited to 50 % of the converter rating. • Check for a DC bus short, internally and externally. • Verify that the wiring harness to P10 on the converter gate firing board is connected and not damaged. Replace the harness as necessary. • Verify that the capacitor bank is properly installed and connected. • Check for an IGBT short and replace as necessary.
11157 11257 11357	P1 BFuse Harness P2 BFuse Harness P3 BFuse Harness	Non-Reset Fault	Coast				A bus-fuse wiring harness connection loss has been detected. • Check the bus fuse harness and replace if necessary. • If this problem persists, replace the converter gate firing board.

Event No.	Fault/Alarm Text	Type	Fault Action	Configuration Parameter	Auto Reset	Auto Clear	Description/Action(s)
11158 11258 11358	P1 BFuse Pos P2 BFuse Pos P3 BFuse Pos	Non-Reset Fault	Coast				The DC+ bus fuse is blown. • Check the DC+ bus fuse and wiring harness and replace if necessary. • If this problem persists, replace the converter gate firing board.
11159 11259 11359	P1 BFuse Neg P2 BFuse Neg P3 BFuse Neg	Non-Reset Fault	Coast				The DC- bus fuse is blown. • Check the DC- bus fuse and wiring harness and replace if necessary. • If this problem persists, replace the converter gate firing board.
11160 11260 11360	P1 Command Stop P2 Command Stop P3 Command Stop	Resettable Fault	Coast		Y	Y	The main control board has commanded the converter gate firing board to stop due to an asymmetrical bus condition. • Check the DC bus connections and wiring.
11163 11263 11363	P1 Fault Q Full P2 Fault Q Full P3 Fault Q Full	Resettable Fault	Coast				The fault queue is full. There are at least three other faults in the queue. • Troubleshooting and clearing the existing faults make room for additional faults in the queue (if any).

N-1 and Re-Rate Functions

The N-1 feature is available on Frame 9 and larger drives. This feature allows the drive to be run at reduced current limits if one of the paralleled inverter/converter drive assemblies fails.

The letter N represents the number of drive assemblies in the drive. For example, a frame 9 drive has two drive assemblies, therefore N=2. A Frame 9 drive running the N-1 feature is running on one drive assembly, that is, N-1 =1.

The N-1 feature does not change the rating of the drive. It is a way to impose temporary output restrictions on the drive until the damaged inverter/converter drive assembly is repaired and reinstalled. Some customers can elect to oversize their drives, to have redundant inverter/converter assemblies.

The Re-Rate function allows the rating of the drive to be changed. This procedure is used when making long-term changes.

N-1 and Re-Rating with Integrated Motion on EtherNet/IP

These features cannot be used while the drive is in Integrated Motion on EtherNet/IP mode. If these features are needed, disconnect the drive from the EtherNet/IP network, perform the N-1 or Re-Rate procedure, then reconnect the drive to the network.

Use the N-1 Feature

This procedure describes how to use the N-1 feature to run the drive at reduced limits because an inverter/converter assembly has failed.

IMPORTANT You cannot flash update a drive that is using the N-1 feature.

For information on assembly removal and general safety precautions that are related to AC input and Common DC input PowerFlex 755 drives, refer to the PowerFlex 750-Series AC Drives Installation Instructions, publication 750-IN001.

1. Remove all incoming power to the drive.
2. Disconnect and remove the failed drive assembly from the cabinet.

   The control pod can need to be moved from the disabled drive assembly to one of the remaining drive assemblies. See the PowerFlex 750-Series AC Drives Hardware Service Manual, publication 750-TG001.
3. Energize the drive.

   With the drive assembly removed, an F360 “N-1 See Manual” fault is indicated.

4. Verify the new rating shown in Port 10, P21 [Effctv I Rating].

   Set Port 10, P20 [Recfg Acknowledg] to 1 "Acknowledge" to accept the reconfiguration.

5. To clear the fault, press the Stop key on the HIM.

   P20 [Recfg Acknowledg] automatically returns to 0 "Ready."

   Alarm 322 "N-1 Operation" is indicated, and persists, while the drive is in this reconfigured state.

6. Run the reconfigured drive with reduced current and power limits.

Use the Re-Rate Feature

This procedure describes how to use the Re-Rate feature to run the drive at a reduced rating because a drive assembly has been removed.

1. Save the drive current parameter settings by using the Human Interface Module (HIM), DriveExecutive, or DriveExplorer.
2. Remove all incoming power to the drive.

   

   ATTENTION: To avoid an electric shock hazard, verify that the voltage on the bus capacitors has discharged completely before servicing. Measure the DC bus voltage at the DC+ and DC- TESTPOINT sockets on the front of the power module.

3. Disconnect all fiber-optic cables from the fiber interface board, including the connections to the drive assemblies not removed.
4. Remove the selected drive assembly from the cabinet.
5. Energize the drive.

   With all fiber-optic cables disconnected, "No Inverters" and "No Converters" port verification errors are indicated.

6. On the HIM, press FIX to acknowledge the error then Enter to confirm.
7. Remove all incoming power to the drive. Verify that the bus capacitors have discharged before continuing.
8. Reconnect the fiber-optic cables to the fiber interface board.
9. Energize the drive.

   With the drive assembly removed, a "One Inverter" port verification error is indicated.

10. On the HIM, press FIX to acknowledge the error then Enter to confirm.

    An F361 "Rerate See Manual" fault is indicated.

11. Verify the new rating shown in Port 10, P21 [Effctv I Rating].

    Set Port 10, P20 [Recfg Acknowledg] to 1 “Acknowledge” to accept the reconfiguration.

IMPORTANT	Drive parameters are set to factory defaults when the new rating is acknowledged. If a condition exists that does not allow the drive parameters to be set to factory defaults, setting P20 to 1 “Acknowledge” is not accepted. Such conditions include the drive is running, DeviceLogix is running, or the drive is communicating with a PLC.

12. To clear the fault, press the Stop key on the HIM.

    P20 [Recfg Acknowledg] automatically returns to 0 “Ready.”

13. Use the HIM download function, DriveExecutive download function, or DriveExplorer download function to download the parameter settings saved in Step1.

IMPORTANT	Do not use the Compare Screen Copy function in DriveExecutive or the Error Check Download function in DriveExplorer to perform this step.

14. Run the reconfigured drive at the reduced rating and power limits.

Use the Re-Rate Feature to Add or Replace a Drive Assembly

This procedure describes how to use the Re-Rate feature to increase the drive rating because a drive assembly has been added. For example, a drive assembly has been repaired and is being reinstalled. Because the drive was Re-Rated when the drive assembly was removed, it must be re-rated again to run at full rating and power limits.

1. Save the drive current parameter settings by using the Human Interface Module (HIM), DriveExecutive, or DriveExplorer.
2. Remove all incoming power to the drive.



ATTENTION: To avoid an electric shock hazard, verify that the voltage on the bus capacitors has discharged completely before servicing. Measure the DC bus voltage at the DC+ and DC- TESTPOINT sockets on the front of the power module.

3. Add the drive assembly to the drive and connect it to the fiber interface board in consecutive order.

4. Energize the drive.

   With the addition of a drive assembly, port verification errors indicate the number of installed drive assemblies. For example, a frame 9 would indicate "Two Inverters" and "Two Converters."

5. On the HIM press FIX to acknowledge the error then Enter to confirm.

   An F361 "Rerate See Manual" fault is indicated.

6. Verify the new rating shown in Port 10, P21 [Effctv I Rating].

   Set Port 10, P20 [Recfg Acknowledg] to 1 "Acknowledge" to accept the reconfiguration.

   IMPORTANT Drive parameters are set to factory defaults when reconfiguration is acknowledged. If a condition exists that does not allow the drive parameters to be set to factory defaults, setting P20 to 1 "Acknowledge" is not accepted. Such conditions include the drive is running, DeviceLogix is running, or the drive is communicating with a PLC.

7. To clear the fault, press the Stop key on the HIM.

   P20 [Recfg Acknowledg] automatically returns to 0 "Ready."

8. Use the HIM download function, DriveExecutive download function, or DriveExplorer download function to download the parameter settings saved in Step1.

   IMPORTANT Do not use the Compare Screen Copy function in DriveExecutive or the Error Check Download function in DriveExplorer to perform this step.

9. Run the drive at the full rating and full power limits.

Embedded EtherNet/IP (Port 13) Events

The adapter has an event queue to record significant events that occur in the operation of the adapter. When such an event occurs, an entry consisting of the event numeric code and a timestamp is put into the event queue. You can view the event queue by using the PowerFlex 20-HIM-A6/-C6S HIM, DriveExplorer software (version 6.01 or later), DriveExecutive software (version 5.01 or later), or other clients by using the DPI Fault object. For details on how to view and clear events by using the HIM, see the PowerFlex 20-HIM-A6/-C6S HIM (Human Interface Module) User Manual, publication 20HIM-UM001.

Many events in the event queue occur under normal operation. If you encounter unexpected communications problems, the events can help you or Rockwell Automation personnel troubleshoot the problem. The following events can appear in the event queue.

Table 15 - Adapter Events

Code	Event	Description
13001	No Event	Text that is displayed in an empty event queue entry.
13002	Device Power Up	Power was applied to the adapter.
13003	Device Reset	The adapter was reset.
13004	EEPROM CRC Error	The EEPROM checksum/CRC is incorrect, which limits adapter functionality. Default parameter values must be loaded to clear this condition.
13005	App Updated	The adapter application firmware was flash updated.
13006	Boot Updated	The adapter boot firmware was flash updated.
13007… 13024	Reserved	–

Table 16 - DPI Events

Code	Event	Description
13025	DPI Manual Reset	The adapter was reset.
13026… 13028	Reserved	–

Table 17 - Network Events

Code	Event	Description
13029	Net Link Up	A network link was available for the adapter.
13030	Net Link Down	The network link was removed from the adapter.
13031	Net Dup Address	The adapter uses the same IP address as another device on the network.
13032	Net Comm Fault	The adapter detected a communications fault on the network.
13033	Net Sent Reset	The adapter received a reset from the network.
13034	Net IO Close	An I/O connection from the network to the adapter was closed.
13035	Net Idle Fault	The adapter received "idle" packets from the network.
13036	Net IO Open	An I/O connection from the network to the adapter has been opened.
13037	Net IO Timeout	An I/O connection from the network to the adapter has timed out.
13038	Net IO Size Err	The adapter received an incorrectly sized I/O packet.
13039	PCCC IO Close	The device sending PCCC Control messages to the adapter has set the PCCC Control Timeout to zero.
13040	PCCC IO Open	The adapter has begun receiving PCCC Control messages (the PCCC Control Timeout was previously set to a non-zero value).

Code	Event	Description
13041	PCCC IO Timeout	The adapter has not received a PCCC Control message for longer than the PCCC Control Timeout.
13042	Msg Ctrl Open	The timeout attribute in either the CIP Register or Assembly object was written with a non-zero value, allowing control messages to be sent to the adapter.
13043	Msg Ctrl Close	The timeout attribute in either the CIP Register or Assembly object was written with a zero value, disallowing control messages to be sent to the adapter.
13044	Msg Ctrl Timeout	The timeout attribute in either the CIP Register or Assembly object elapsed between accesses of those objects.
13045	Peer IO Open	The adapter received the first Peer I/O message.
13046	Peer IO Timeout	The adapter has not received a Peer I/O message for longer than the Peer I/O Timeout.
13047…13054	Reserved	–
13055	BOOTP Response	The adapter received a response to its BOOTP request.
13056	E-mail Failed	The adapter encountered an error attempting to send a requested e-mail message.
13057	Option Card Flt	The adapter experienced a generic fault condition (drive only).
13058	Module Defaulted	The adapter has been set to defaults.
13059	Net Memory Mgmt	The adapter encountered an error with buffer counters or lists.

I/O Faults and Alarms

Table 18 contains a list of I/O-specific faults and alarms, the type of fault or alarm, the action that is taken when the drive faults, the parameter that is used to configure the fault or alarm (if applicable), and a description and action (where applicable). See Faults, Alarms, and Configurable Conditions for information on the Auto Reset (Auto Reset Run/Restart) and Auto Clear (Auto Reset Clear) columns in this table.

Table 18 - I/O Fault and Alarm Types, Descriptions, and Actions

Event No. (1)	Fault/Alarm Text	Type	Fault Action	Configuration Parameter	Auto Reset	Auto Clear	Description/Action(s)
*xx*000	No Entry						
*xx*001	Analog In Loss	Configurable		P53/P63 [Anlg InX LssActn]		Y	Analog input has a lost signal.
*xx*002	Motor PTC Trip	Configurable		P40 [PTC Cfg]		Y	Motor PTC (Positive Temperature Coefficient) over temperature.
*xx*005	Relay0 Life	Configurable		P106 [R00 LifeEvntActn]			Predictive maintenance.
*xx*006	Relay1 Life	Configurable		P116 [R01 LifeEvntActn]			Predictive maintenance.
xx010	Anlg Cal Chksum	Non-Reset Fault	Coast				The checksum read from the analog calibration data does not match the checksum calculated. Replace option module.
*xx*058	Module Defaulted	Fault	Coast				Module was commanded to write default values.

(1) *xx* indicates the port number. See Fault and Alarm Display Codes on page 319 for an explanation.

Safe Torque Off Fault

Table 19 lists the safe torque off-specific fault, the action taken when the drive faults, and its description.

Table 19 - Safe Torque Fault and Alarm Types, Descriptions, and Actions

Event No. (1)	Fault/Alarm Text	Type	Fault Action	Configuration Parameter	Auto Reset	Description/Action(s)
*xx*000	No Entry					
*xx*058	Module Defaulted	Fault	Coast			Module was commanded to write default values.

(1) *xx* indicates the port number. See Fault and Alarm Display Codes on page 319 for an explanation.

ATEX Faults

Table 20 lists the ATEX-specific fault, the action taken when the drive faults, and its description.

Table 20 - ATEX Fault Types, Descriptions, and Actions

Event No. (1)	Fault/Alarm Text	Type	Fault Action	Configuration Parameter	Auto Reset	Description/Action(s)
*xx*011	PTC Over Temp	Resettable Fault	Coast			An over-temperature condition has been detected in the motor, or the sensor path has been broken.
*xx*012	PTC ShortCircuit	Resettable Fault	Coast			A short circuit condition has been detected in the sensor path. If unable to clear fault, be sure the thermal sensor that is connected is a PTC type and not a thermostatic type.
*xx*013	ATX VoltageLoss	Resettable Fault	Coast			Possible hardware damage. The motor to the thermal sensor is shorted. Excessive EMC noise due to improper grounding/shielding.
*xx*014	ThermostatOvrTmp	Resettable Fault	Coast			An over-temperature condition has been detected in the motor, or the sensor path has been broken.

(1) *xx* indicates the port number where the ATEX option is installed.

Single Incremental Encoder Faults and Alarms

Table 21 contains a list of encoder-specific faults and alarms, the type of fault or alarm, the action that is taken when the drive faults, the parameter that is used to configure the fault or alarm (if applicable), and a description and action (where applicable).

Table 21 - Single Incremental Encoder Fault and Alarm Types, Descriptions, and Actions

Event No. (1)	Fault/Alarm Text	Type	Fault Action	Configuration Parameter	Auto Reset	Description/Action(s)
*xx*000	Open Wire	Configurable		P3 [Fdbk Loss Cfg]		The encoder module has detected an input signal (A, B, or Z) in the same state as its complement (A Not, B Not, or Z Not). For open wire detection to work, the encoder signals must be differential (not single ended). The Z channel is only checked when enabled. See P1 [Encoder Cfg].
*xx*001	Phase Loss	Configurable		P3 [Fdbk Loss Cfg]		More than 30-phase loss (open wire) events have occurred over an 8 millisecond time period. The same restrictions as for Open Wire detection apply.
*xx*002	Quadrature Loss	Configurable		P3 [Fdbk Loss Cfg]		Quadrature loss events occur when simultaneous edge transitions occur on both the A and B encoder channels. This fault occurs when more than 10 quad loss events over a 10 millisecond time period are detected. Only valid when both A and B channels are used (not Bit 1 "A Chan Only") in P1 [Encoder Cfg].
*xx*058	Module Defaulted	Fault	Coast			Module was commanded to write default values.

(1) *xx* indicates the port number. See Fault and Alarm Display Codes on page 319 for an explanation.

Dual Incremental Encoder Faults and Alarms

Table 22 contains a list of encoder-specific faults and alarms, the type of fault or alarm, the action that is taken when the drive faults, the parameter that is used to configure the fault or alarm (if applicable), and a description and action (where applicable).

Table 22 - Dual Incremental Encoder Fault and Alarm Types, Descriptions, and Actions

Event No. (1)	Fault/Alarm Text	Type	Fault Action	Configuration Parameter	Auto Reset	Description/Action(s)
*xx*000	Enc0 Open Wire	Configurable		P3 [Enc 0 FB Lss Cfg]		The dual encoder module has detected an encoder 0 input signal (A, B, or Z) in the same state as its complement (A Not, B Not, or Z Not). For open wire detection to work, the encoder signals must be differential (not single ended). The Z channel is only checked when enabled. See P1 [Enc 0 Cfg].
*xx*001	Enc0 Phase Loss	Configurable		P3 [Enc 0 FB Lss Cfg]		More than 30 encoder 0 phase loss (open wire) events have occurred over an 8 millisecond time period. The same restrictions as for Enc0 Open Wire detection apply.
*xx*002	Enc0 Quad Loss	Configurable		P3 [Enc 0 FB Lss Cfg]		Encoder 0 Quadrature loss events occur when simultaneous edge transitions occur on both the A and B channels of encoder 0. This fault occurs when more than 10 quad loss events over a 10 millisecond time period are detected. Only valid when both A and B channels are used (not Bit 1 "A Chan Only") in P1 [Enc 0 Cfg].
*xx*030	Enc1 Open Wire	Configurable		P13 [Enc 1 FB Lss Cfg]		The dual encoder module has detected an encoder 1 input signal (A, B, or Z) in the same state as its complement (A Not, B Not, or Z Not). For open wire detection to work, the encoder signals must be differential (not single ended). The Z channel is only checked when enabled. See P11 [Enc 1 Cfg].
*xx*031	Enc1 Phase Loss	Configurable		P13 [Enc 1 FB Lss Cfg]		More than 30 encoder 1 phase loss (open wire) events have occurred over an 8 millisecond time period. The same restrictions as for Enc1 Open Wire detection apply.
*xx*032	Enc1 Quad Loss	Configurable		P13 [Enc 1 FB Lss Cfg]		Encoder 1 Quadrature loss events occur when simultaneous edge transitions occur on both the A and B channels of encoder 1. This fault occurs when more than 10 quad loss events over a 10 millisecond time period are detected. Only valid when both A and B channels are used (not Bit 1 "A Chan Only") in P11 [Enc 1 Cfg].
*xx*058	Module Defaulted	Fault	Coast			Module was commanded to write default values.

(1) *xx* indicates the port number. See Fault and Alarm Display Codes on page 319 for an explanation.

Universal Feedback Faults and Alarms

Table 23 contains a list of universal feedback-specific faults and alarms, the type of fault or alarm, the action that is taken when the drive faults, the parameter that is used to configure the fault or alarm (if applicable), and a description and action (where applicable).

Table 23 - Universal Feedback Fault and Alarm Types, Descriptions, and Actions

Event No. (1)	Fault/Alarm Text	Type	Fault Action	Configuration Param	Auto Reset	Description
*xx*000	LightSrc Err	Configurable		P9 [FB0 Loss Cfg]		Error reported by Heidenhain Encoder on Channel 0 with EnDat Interface - Light source failure
*xx*001	Ch0 SigAmp Err	Configurable		P9 [FB0 Loss Cfg]		Error reported by Heidenhain Encoder on Channel 0 with EnDat Interface -Signal amplitude error
*xx*002	Ch0 PsnVal Err	Configurable		P9 [FB0 Loss Cfg]		Error reported by Heidenhain Encoder on Channel 0 with EnDat Interface - Position value error
*xx*003	Ch0 OverVolt Err	Configurable		P9 [FB0 Loss Cfg]		Error reported by Heidenhain Encoder on Channel 0 with EnDat Interface - Overvoltage error
*xx*004	Ch0 UndVolt Err	Configurable		P9 [FB0 Loss Cfg]		Error reported by Heidenhain Encoder on Channel 0 with EnDat Interface - Undervoltage error
*xx*005	Ch0 OverCur Err	Configurable		P9 [FB0 Loss Cfg]		Error reported by Heidenhain Encoder on Channel 0 with EnDat Interface - Overcurrent error
*xx*006	Ch0 Battery Err	Configurable		P9 [FB0 Loss Cfg]		Error reported by Heidenhain Encoder on Channel 0 with EnDat Interface - Battery empty
*xx*009	Ch0 AnalSig Err	Configurable		P9 [FB0 Loss Cfg]		Error reported by Stegmann Encoder on Channel 0 with Hiperface Interface - Analog signals outside specification
*xx*010	Ch0 IntOfst Err	Configurable		P9 [FB0 Loss Cfg]		Error reported by Stegmann Encoder on Channel 0 with Hiperface Interface - Faulty internal angular offset
*xx*011	Ch0 DataTabl Err	Configurable		P9 [FB0 Loss Cfg]		Error reported by Stegmann Encoder on Channel 0 with Hiperface Interface - Data field partitioning table damaged
*xx*012	Ch0 AnalLim Err	Configurable		P9 [FB0 Loss Cfg]		Error reported by Stegmann Encoder on Channel 0 with Hiperface Interface - Analog limit values not available
*xx*013	Ch0 Int I2C Err	Configurable		P9 [FB0 Loss Cfg]		Error reported by Stegmann Encoder on Channel 0 with Hiperface Interface - Internal I2C bus not operational
*xx*014	Ch0 IntChksm Err	Configurable		P9 [FB0 Loss Cfg]		Error reported by Stegmann Encoder on Channel 0 with Hiperface Interface - Internal checksum error
*xx*015	Ch0 PrgmResetErr	Configurable		P9 [FB0 Loss Cfg]		Error reported by Stegmann Encoder on Channel 0 with Hiperface Interface - Encoder reset occurred as a result of program monitoring
*xx*016	Ch0 CntOvrflwErr	Configurable		P9 [FB0 Loss Cfg]		Error reported by Stegmann Encoder on Channel 0 with Hiperface Interface - Counter overflow
*xx*017	Ch0 Parity Err	Configurable		P9 [FB0 Loss Cfg]		Error reported by Stegmann Encoder on Channel 0 with Hiperface Interface - Parity error
*xx*018	Ch0 Chksum Err	Configurable		P9 [FB0 Loss Cfg]		Error reported by Stegmann Encoder on Channel 0 with Hiperface Interface - Checksum of the data that are transmitted is incorrect
*xx*019	Ch0 InvCmd Err	Configurable		P9 [FB0 Loss Cfg]		Error reported by Stegmann Encoder on Channel 0 with Hiperface Interface - Unknown command code
*xx*020	Ch0 SendSize Err	Configurable		P9 [FB0 Loss Cfg]		Error reported by Stegmann Encoder on Channel 0 with Hiperface Interface - Number of data that are transmitted is incorrect
*xx*021	Ch0 CmdArgmt Err	Configurable		P9 [FB0 Loss Cfg]		Error reported by Stegmann Encoder on Channel 0 with Hiperface Interface - Command argument that is transmitted is not allowed
*xx*022	Ch0 InvWrtAdrErr	Configurable		P9 [FB0 Loss Cfg]		Error reported by Stegmann Encoder on Channel 0 with Hiperface Interface - The selected data field must not be written to (invalid write address)

Event No. (1)	Fault/Alarm Text	Type	Fault Action	Configuration Param	Auto Reset	Description
*xx*023	Ch0 AccCode Err	Configurable		P9 [FB0 Loss Cfg]		Error reported by Stegmann Encoder on Channel 0 with Hiperface Interface - Incorrect access code
*xx*024	Ch0 FieldSizeErr	Configurable		P9 [FB0 Loss Cfg]		Error reported by Stegmann Encoder on Channel 0 with Hiperface Interface - Size of data field that is stated cannot be changed
*xx*025	Ch0 Address Err	Configurable		P9 [FB0 Loss Cfg]		Error reported by Stegmann Encoder on Channel 0 with Hiperface Interface - Word address that is stated is outside data field
*xx*026	Ch0 FieldAcc Err	Configurable		P9 [FB0 Loss Cfg]		Error reported by Stegmann Encoder on Channel 0 with Hiperface Interface - Access to non-existent data field
*xx*028	Ch0 SiTurnPsnErr	Configurable		P9 [FB0 Loss Cfg]		Error reported by Stegmann Encoder on Channel 0 with Hiperface Interface - Single turn position unreliable
*xx*029	Ch0 MulTrnPsnErr	Configurable		P9 [FB0 Loss Cfg]		Error reported by Stegmann Encoder on Channel 0 with Hiperface Interface - Multiple turn position unreliable
*xx*036	Ch0 AnalVal Err	Configurable		P9 [FB0 Loss Cfg]		Error reported by Stegmann Encoder on Channel 0 with Hiperface Interface - Analog value error (process data)
*xx*037	Ch0 SendCurr Err	Configurable		P9 [FB0 Loss Cfg]		Error reported by Stegmann Encoder on Channel 0 with Hiperface Interface - Transmitter current critical (dirt, broken transmitter)
*xx*038	Ch0 EncTemp Err	Configurable		P9 [FB0 Loss Cfg]		Error reported by Stegmann Encoder on Channel 0 with Hiperface Interface - Encoder temperature critical
*xx*039	Ch0 Speed Err	Configurable		P9 [FB0 Loss Cfg]		Error reported by Stegmann Encoder on Channel 0 with Hiperface Interface - Speed too high, no position formation possible
*xx*040	Ch0 General Err	Configurable		P9 [FB0 Loss Cfg]		Error reported by an Encoder on Channel 0 with BiSS Interface - An error bit of the BiSS Single Cycle Data is set
*xx*046	Ch0 LED Curr Err	Configurable		P9 [FB0 Loss Cfg]		Error reported by an Encoder on Channel 0 with BiSS Interface - LED current out of control range
*xx*047	Ch0 ExMulTurnErr	Configurable		P9 [FB0 Loss Cfg]		Error reported by an Encoder on Channel 0 with BiSS Interface - External multi-turn error
*xx*048	Ch0 PsnCode Err	Configurable		P9 [FB0 Loss Cfg]		Error reported by an Encoder on Channel 0 with BiSS Interface - Position code error (single-step error)
*xx*049	Ch0 Config Err	Configurable		P9 [FB0 Loss Cfg]		Error reported by an Encoder on Channel 0 with BiSS Interface - failure configuring interface
*xx*050	Ch0 PsnVal Err	Configurable		P9 [FB0 Loss Cfg]		Error reported by an Encoder on Channel 0 with BiSS Interface - Position data not valid
*xx*051	Ch0 SerialComErr	Configurable		P9 [FB0 Loss Cfg]		Error reported by an Encoder on Channel 0 with BiSS Interface - Serial interface failure
*xx*052	Ch0 Ext Failure	Configurable		P9 [FB0 Loss Cfg]		Error reported by an Encoder on Channel 0 with BiSS Interface - External failure over NERR
*xx*053	Ch0 Temp Exc Err	Configurable		P9 [FB0 Loss Cfg]		Error reported by an Encoder on Channel 0 with BiSS Interface - Temperature out of defined range
*xx*058	Module Defaulted	Fault	Coast			Parameter values for this encoder have been reset to their default settings.
*xx*064	Ch0 OutOfRailErr	Configurable		P9 [FB0 Loss Cfg]		Error reported by a linear Stahl encoder on Channel 0 - Rail is no longer present between the read head
*xx*068	Ch0 Read Head 1	Configurable		P9 [FB0 Loss Cfg]		Error reported by a linear Stahl encoder on Channel 0 - Indicates that the read head must be cleaned or installed correctly
*xx*069	Ch0 Read Head 2	Configurable		P9 [FB0 Loss Cfg]		Error reported by a linear Stahl encoder on Channel 0 - Indicates that the read head must be cleaned or installed correctly
*xx*070	Ch0 RAM Error	Configurable		P9 [FB0 Loss Cfg]		Error reported by a linear Stahl encoder on Channel 0 - Indicates a RAM error. Reading head must be repaired
*xx*071	Ch0 EPROM Error	Configurable		P9 [FB0 Loss Cfg]		Error reported by a linear Stahl encoder on Channel 0 - Indicates an EPROM error. Reading head must be repaired

Event No. (1)	Fault/Alarm Text	Type	Fault Action	Configuration Param	Auto Reset	Description
*xx*072	Ch0 ROM Error	Configurable		P9 [FB0 Loss Cfg]		Error reported by a linear Stahl encoder on Channel 0 - Indicates a ROM error. Reading head must be repaired
*xx*074	Ch0 No Position	Configurable		P9 [FB0 Loss Cfg]		Error reported by a linear Stahl encoder on Channel 0 - Indicates that no position value was available - only possible following powerup or reset
*xx*081	Ch0 Msg Cheksum	Configurable		P9 [FB0 Loss Cfg]		Indicates that the option card has detected a serial communications checksum error while attempting to communicate with the encoder on channel 0.
*xx*082	Ch0 Timeout	Configurable		P9 [FB0 Loss Cfg]		Indicates that the option card has detected a serial communications timeout error while attempting to communicate with the encoder on channel 0.
*xx*083	Ch0 Comm	Configurable		P9 [FB0 Loss Cfg]		Indicates that the option card has detected a serial communications error (other than checksum or timeout) while attempting to communicate with the encoder on channel 0.
*xx*084	Ch0 Diagnostic	Configurable		P9 [FB0 Loss Cfg]		Indicates that the option card has detected a powerup diagnostic test failure for encoder channel 0.
*xx*085	Ch0 SpplyVltgRng	Configurable		P9 [FB0 Loss Cfg]		Indicates that the voltage source to the encoder 0 is out of range.
*xx*086	Ch0 SC Amplitude	Configurable		P9 [FB0 Loss Cfg]		Indicates that the encoder 0 signal amplitude is out of tolerance.
*xx*087	Ch0 Open Wire	Configurable		P9 [FB0 Loss Cfg]		Indicates that an open wire condition has been detected for encoder 0. Both Sine and Cosine signals fell below 0.3 volts.
*xx*088	Ch0 Quad Loss	Configurable		P9 [FB0 Loss Cfg]		Indicates that a signal quadrature error has been detected for encoder 0. Add ferite cores.
*xx*089	Ch0 Phase Loss	Configurable		P9 [FB0 Loss Cfg]		Indicates that an A or B signal of an A quad B incremental encoder on Channel 0 is disconnected.
*xx*090	Ch0 Unsupp Enc	Configurable		P9 [FB0 Loss Cfg]		Indicates that the connected encoder on Channel 0 is not supported
*xx*100	Ch0 FreqExc Alm	Alarm 1		P9 [FB0 Loss Cfg]		Alarm reported by Heidenhain Encoder on Channel 0 with EnDat Interface - Frequency exceeded warning
*xx*101	Ch0 TempExc Alm	Alarm 1		P9 [FB0 Loss Cfg]		Alarm reported by Heidenhain Encoder on Channel 0 with EnDat Interface - Temperature exceeded warning
*xx*102	Ch0 LightLim Alm	Alarm 1		P9 [FB0 Loss Cfg]		Alarm reported by Heidenhain Encoder on Channel 0 with EnDat Interface - Limit of light control reserve reached
*xx*103	Ch0 Battery Alm	Alarm 1		P9 [FB0 Loss Cfg]		Alarm reported by Heidenhain Encoder on Channel 0 with EnDat Interface - Battery warning
*xx*104	Ch0 RefPoint Alm	Alarm 1		P9 [FB0 Loss Cfg]		Alarm reported by Heidenhain Encoder on Channel 0 with EnDat Interface - Reference point not reached
*xx*108	Ch0 General Alm	Alarm 1		P9 [FB0 Loss Cfg]		Alarm reported by an Encoder on Channel 0 with BiSS Interface - A warning bit of the BiSS Single Cycle Data is set
*xx*115	Ch0 Optics Alarm	Alarm 1		P9 [FB0 Loss Cfg]		Alarm reported by a linear Stahl encoder on Channel 0 - Displays an alarm when the Stahl optical system requires cleaning
*xx*116	Ch0 OutOfRailAlm	Alarm 1		P9 [FB0 Loss Cfg]		Alarm reported by a linear Stahl encoder on Channel 0 - Indicates that the read encoder count is at the maximum value (524287)
*xx*200	Ch1 LightSrc Err	Configurable		P39 [FB1 Loss Cfg]		Error reported by Heidenhain Encoder on Channel 1 with EnDat Interface - Light source failure
*xx*201	Ch1 SigAmp Err	Configurable		P39 [FB1 Loss Cfg]		Error reported by Heidenhain Encoder on Channel 1 with EnDat Interface -Signal amplitude error
*xx*202	Ch1 PsnVal Err	Configurable		P39 [FB1 Loss Cfg]		Error reported by Heidenhain Encoder on Channel 1 with EnDat Interface - Position value error
*xx*203	Ch1 OverVolt Err	Configurable		P39 [FB1 Loss Cfg]		Error reported by Heidenhain Encoder on Channel 1 with EnDat Interface - Overvoltage error

Event No. (1)	Fault/Alarm Text	Type	Fault Action	Configuration Param	Auto Reset	Description
*xx*204	Ch1 UndVolt Err	Configurable		P39 [FB1 Loss Cfg]		Error reported by Heidenhain Encoder on Channel 1 with EnDat Interface - Undervoltage error
*xx*205	Ch1 OverCur Err	Configurable		P39 [FB1 Loss Cfg]		Error reported by Heidenhain Encoder on Channel 1 with EnDat Interface - Overcurrent error
*xx*206	Ch1 Battery Err	Configurable		P39 [FB1 Loss Cfg]		Error reported by Heidenhain Encoder on Channel 1 with EnDat Interface - Battery empty
*xx*209	Ch1 AnalSig Err	Configurable		P39 [FB1 Loss Cfg]		Error reported by Stegmann Encoder on Channel 1 with Hiperface Interface - Analog signals outside specification
*xx*210	Ch1 IntOfst Err	Configurable		P39 [FB1 Loss Cfg]		Error reported by Stegmann Encoder on Channel 1 with Hiperface Interface - Faulty internal angular offset
*xx*211	Ch1 DataTabl Err	Configurable		P39 [FB1 Loss Cfg]		Error reported by Stegmann Encoder on Channel 1 with Hiperface Interface - Data field partitioning table damaged
*xx*212	Ch1 AnalLim Err	Configurable		P39 [FB1 Loss Cfg]		Error reported by Stegmann Encoder on Channel 1 with Hiperface Interface - Analog limit values not available
*xx*213	Ch1 Int I2C Err	Configurable		P39 [FB1 Loss Cfg]		Error reported by Stegmann Encoder on Channel 1 with Hiperface Interface - Internal I2C bus not operational
*xx*214	Ch1 IntChksm Err	Configurable		P39 [FB1 Loss Cfg]		Error reported by Stegmann Encoder on Channel 1 with Hiperface Interface - Internal checksum error
*xx*215	Ch1 PrgmResetErr	Configurable		P39 [FB1 Loss Cfg]		Error reported by Stegmann Encoder on Channel 1 with Hiperface Interface - Encoder reset occurred as a result of program monitoring
*xx*216	Ch1 CntOvrflwErr	Configurable		P39 [FB1 Loss Cfg]		Error reported by Stegmann Encoder on Channel 1 with Hiperface Interface - Counter overflow
*xx*217	Ch1 Parity Err	Configurable		P39 [FB1 Loss Cfg]		Error reported by Stegmann Encoder on Channel 1 with Hiperface Interface - Parity error
*xx*218	Ch1 Chksum Err	Configurable		P39 [FB1 Loss Cfg]		Error reported by Stegmann Encoder on Channel 1 with Hiperface Interface - Checksum of the data that is transmitted is incorrect
*xx*219	Ch1 InvCmd Err	Configurable		P39 [FB1 Loss Cfg]		Error reported by Stegmann Encoder on Channel 1 with Hiperface Interface - Unknown command code
*xx*220	Ch1 SendSize Err	Configurable		P39 [FB1 Loss Cfg]		Error reported by Stegmann Encoder on Channel 1 with Hiperface Interface - Number of data that is transmitted is incorrect
*xx*221	Ch1 CmdArgmt Err	Configurable		P39 [FB1 Loss Cfg]		Error reported by Stegmann Encoder on Channel 1 with Hiperface Interface - Command argument that is transmitted is not allowed
*xx*222	Ch1 InvWrtAdrErr	Configurable		P39 [FB1 Loss Cfg]		Error reported by Stegmann Encoder on Channel 1 with Hiperface Interface - The selected data field must not be written to (invalid write address)
*xx*223	Ch1 AccCode Err	Configurable		P39 [FB1 Loss Cfg]		Error reported by Stegmann Encoder on Channel 1 with Hiperface Interface - Incorrect access code
*xx*224	Ch1 FieldSizeErr	Configurable		P39 [FB1 Loss Cfg]		Error reported by Stegmann Encoder on Channel 1 with Hiperface Interface - Size of data field that is stated cannot be changed
*xx*225	Ch1 Address Err	Configurable		P39 [FB1 Loss Cfg]		Error reported by Stegmann Encoder on Channel 1 with Hiperface Interface - Word address that is stated is outside data field
*xx*226	Ch1 FieldAcc Err	Configurable		P39 [FB1 Loss Cfg]		Error reported by Stegmann Encoder on Channel 1 with Hiperface Interface - Access to non-existent data field
*xx*228	Ch1 SiTurnPsnErr	Configurable		P39 [FB1 Loss Cfg]		Error reported by Stegmann Encoder on Channel 1 with Hiperface Interface - Single turn position unreliable
*xx*229	Ch1 MulTrnPsnErr	Configurable		P39 [FB1 Loss Cfg]		Error reported by Stegmann Encoder on Channel 1 with Hiperface Interface - Multiple turn position unreliable
*xx*236	Ch1 AnalVal Err	Configurable		P39 [FB1 Loss Cfg]		Error reported by Stegmann Encoder on Channel 1 with Hiperface Interface - Analog value error (process data)

Event No. (1)	Fault/Alarm Text	Type	Fault Action	Configuration Param	Auto Reset	Description
*xx*237	Ch1 SendCurr Err	Configurable		P39 [FB1 Loss Cfg]		Error reported by Stegmann Encoder on Channel 1 with Hiperface Interface - Transmitter current critical (dirt, broken transmitter)
*xx*238	Ch1 EncTemp Err	Configurable		P39 [FB1 Loss Cfg]		Error reported by Stegmann Encoder on Channel 1 with Hiperface Interface - Encoder temperature critical
*xx*239	Ch1 Speed Err	Configurable		P39 [FB1 Loss Cfg]		Error reported by Stegmann Encoder on Channel 1 with Hiperface Interface - Speed too high, no position formation possible
*xx*240	Ch1 General Err	Configurable		P39 [FB1 Loss Cfg]		Error reported by an Encoder on Channel 1 with BiSS Interface - An error bit of the BiSS Single Cycle Data is set
*xx*246	Ch1 LED Curr Err	Configurable		P39 [FB1 Loss Cfg]		Error reported by an Encoder on Channel 1 with BiSS Interface - LED current out of control range
*xx*247	Ch1 ExMulTurnErr	Configurable		P39 [FB1 Loss Cfg]		Error reported by an Encoder on Channel 1 with BiSS Interface - External multi-turn error
*xx*248	Ch1 PsnCode Err	Configurable		P39 [FB1 Loss Cfg]		Error reported by an Encoder on Channel 1 with BiSS Interface - Position code error (single step error)
*xx*249	Ch1 Config Err	Configurable		P39 [FB1 Loss Cfg]		Error reported by an Encoder on Channel 1 with BiSS Interface - failure configuring interface
*xx*250	Ch1 PsnVal Err	Configurable		P39 [FB1 Loss Cfg]		Error reported by an Encoder on Channel 1 with BiSS Interface - Position data not valid
*xx*251	Ch1 SerialComErr	Configurable		P39 [FB1 Loss Cfg]		Error reported by an Encoder on Channel 1 with BiSS Interface - Serial interface failure
*xx*252	Ch1 Ext Failure	Configurable		P39 [FB1 Loss Cfg]		Error reported by an Encoder on Channel 1 with BiSS Interface - External failure over NERR
*xx*253	Ch1 Temp Exc Err	Configurable		P39 [FB1 Loss Cfg]		Error reported by an Encoder on Channel 1 with BiSS Interface - Temperature out of defined range
*xx*256	Ch1 OutOfRailErr	Configurable		P39 [FB1 Loss Cfg]		Error reported by a linear Stahl encoder on Channel 1 - Rail is no longer present between the read head
*xx*260	Ch1 Read Head 1	Configurable		P39 [FB1 Loss Cfg]		Error reported by a linear Stahl encoder on Channel 1 - Indicates that the read head must be cleaned or installed correctly
*xx*261	Ch1 Read Head 2	Configurable		P39 [FB1 Loss Cfg]		Error reported by a linear Stahl encoder on Channel 1 - Indicates that the read head must be cleaned or installed correctly
*xx*262	Ch1 RAM Error	Configurable		P39 [FB1 Loss Cfg]		Error reported by a linear Stahl encoder on Channel 1 - Indicates a RAM error. Reading head must be repaired
*xx*263	Ch1 EPROM Error	Configurable		P39 [FB1 Loss Cfg]		Error reported by a linear Stahl encoder on Channel 1 - Indicates an EPROM error. Reading head must be repaired
*xx*264	Ch1 ROM Error	Configurable		P39 [FB1 Loss Cfg]		Error reported by a linear Stahl encoder on Channel 1 - Indicates a ROM error. Reading head must be repaired
*xx*266	Ch1 No Position	Configurable		P39 [FB1 Loss Cfg]		Error reported by a linear Stahl encoder on Channel 1 - Indicates that no position value was available - only possible following powerup or reset
*xx*281	Ch1 Msg Cheksum	Configurable		P39 [FB1 Loss Cfg]		Indicates that the option card has detected a serial communications checksum error while attempting to communicate with the encoder on channel 1.
*xx*282	Ch1 Timeout	Configurable		P39 [FB1 Loss Cfg]		Indicates that the option card has detected a serial communications timeout error while attempting to communicate with the encoder on channel 1.
*xx*283	Ch1 Comm	Configurable		P39 [FB1 Loss Cfg]		Indicates that the option card has detected a serial communications error (other than checksum or timeout) while attempting to communicate with the encoder on channel 1.
*xx*284	Ch1 Diagnostic	Configurable		P39 [FB1 Loss Cfg]		Indicates that the option card has detected a powerup diagnostic test failure for encoder channel 1.
*xx*285	Ch1 SpplyVltgRng	Configurable		P39 [FB1 Loss Cfg]		Indicates that the voltage source to the encoder 1 is out of range.

Event No. (1)	Fault/Alarm Text	Type	Fault Action	Configuration Param	Auto Reset	Description
*xx*286	Ch1 SC Amplitude	Configurable		P39 [FB1 Loss Cfg]		Indicates that the encoder 1 signal amplitude is out of tolerance.
*xx*287	Ch1 Open Wire	Configurable		P39 [FB1 Loss Cfg]		Indicates that an open wire condition has been detected for encoder 1.
*xx*288	Ch1 Quad Loss	Configurable		P39 [FB1 Loss Cfg]		Indicates that a signal quadrature error has been detected for encoder 1
*xx*289	Ch1 Phase Loss	Configurable		P39 [FB1 Loss Cfg]		Indicates that an A or B signal of an A quad B incremental encoder on Channel 1 is disconnected.
*xx*290	Ch1 Unsupp Enc	Configurable		P39 [FB1 Loss Cfg]		Indicates that the connected encoder on Channel 1 is not supported
*xx*300	Ch1 FreqExc Alm	Alarm 1		P39 [FB1 Loss Cfg]		Alarm reported by Heidenhain Encoder on Channel 1 with EnDat Interface - Frequency exceeded warning
*xx*301	Ch1 TempExc Alm	Alarm 1		P39 [FB1 Loss Cfg]		Alarm reported by Heidenhain Encoder on Channel 1 with EnDat Interface - Temperature exceeded warning
*xx*302	Ch1 LightLim Alm	Alarm 1		P39 [FB1 Loss Cfg]		Alarm reported by Heidenhain Encoder on Channel 1 with EnDat Interface - Limit of light control reserve reached
*xx*303	Ch1 Battery Alm	Alarm 1		P39 [FB1 Loss Cfg]		Alarm reported by Heidenhain Encoder on Channel 1 with EnDat Interface - Battery warning
*xx*304	Ch1 RefPoint Alm	Alarm 1		P39 [FB1 Loss Cfg]		Alarm reported by Heidenhain Encoder on Channel 1 with EnDat Interface - Reference point not reached
*xx*308	Ch1 General Alm	Alarm 1		P39 [FB1 Loss Cfg]		Alarm reported by an Encoder on Channel 1 with BiSS Interface - A warning bit of the BiSS Single Cycle Data is set
*xx*315	Ch1 Optics Alarm	Alarm 1		P39 [FB1 Loss Cfg]		Alarm reported by a linear Stahl encoder on Channel 1 - Displays an alarm when the Stahl optical system requires cleaning
*xx*316	Ch1 OutOfRailAlm	Alarm 1		P39 [FB1 Loss Cfg]		Alarm reported by a linear Stahl encoder on Channel 1 - Indicates that the read encoder count is at the maximum value (524287)
*xx*412	Hardware Err	Configurable		Either P9 [FB0 Loss Cfg] or P39 [FB1 Loss Cfg]		Indicates that there is a Hardware Error on the Feedback Option module.
*xx*413	Firmware Err	Configurable		Either P9 [FB0 Loss Cfg] or P39 [FB1 Loss Cfg]		Indicates that there is a Firmware Error on the Feedback Option module. A Firmware Error occurs if the Hardware and the downloaded Firmware are not compatible. This error could also indicate that communication between the Feedback Option module and the Main Control Board was interrupted during power-up. Cycle power to clear this fault.
*xx*416	EncOut Cflct	Alarm 1		Either P9 [FB0 Loss Cfg] or P39 [FB1 Loss Cfg]		Indicates that there is one of the following problems with the Encoder Output: • The selection in the P80 [Enc Out Sel] is not possible since the required pins on the terminal blocks are already used for Feedback 0 or 1 according to P6 [FB0 Device Sel] and P36 [FB1 Device Sel]. • P80 [Enc Out Sel] is set to 2 “Sine Cosine” and there is no signal connected to the pins 1…4 of TB 1. • P80 [Enc Out Sel] is set to 2 “Sine Cosine,” the value of P15/45 [FBX IncAndSC PPR] is not a power of two, and P84 [EncOut Z PPR] is not set to 0 “1 ZPulse.” The value of P15/45 [FBX IncAndSC PPR] must be a power of two. • P80 [Enc Out Sel] is set to 3 “Channel X” or 4 “Channel Y” and there is no encoder connected to that channel. • P80 [Enc Out Sel] is set to 3 “Channel X” or 4 “Channel Y” and there is a linear encoder connected to this channel.

Event No. (1)	Fault/Alarm Text	Type	Fault Action	Configuration Param	Auto Reset	Description
*xx*417	Safety Cflct	Alarm 1		Either P9 [FB0 Loss Cfg] or P39 [FB1 Loss Cfg]		Indicates that the Safety DIP switches are in an invalid position.
*xx*420	FB0FB1 Cflct	Alarm 2				Indicates that the combination of the feedback selection that is done with P6 [FB0 Device Sel] and P36 [FB1 Device Sel] is invalid, i.e. both feedbacks have Sin-Cos-Signals (There is only place for one set of Sin-Cos-Signals on the Terminal Blocks). The drive cannot be started until this configuration conflict is resolved.
*xx*421	Initializing	Alarm 2				Indicates that the Universal Feedback State Machine is in the Initialize State. This Type 2 alarm is provided to be sure that the motor cannot be started during this state.

(1) *xx* indicates the port number. See Fault and Alarm Display Codes on page 319 for an explanation.

Port Verification

When connecting to select devices, such as PowerFlex 750-Series drives, the Port Verification dialog box displays if device conflicts are found during the connection process. These conflicts typically require resolution before the connection is established with the device.

The information and options available in this dialog box are detailed here:

Item	Description
Previous Setup	Identifies the device that was previously installed at this port.
Current Setup	Identifies the device that is currently installed at the port (if applicable).
(Device Not Found)	A message identifying the conflict at the identified port.
Changed	Indicates that the device previously installed at the port that is identified has been removed or changed to another device.
Not supported - Must remove device before connection	Indicates that the device currently installed at the port that is identified has a firmware revision that is not compatible with the drive. The drive must be flash updated to be able to use this device or the device must be removed from the port before a connection can be made.
Not functioning - Must remove device before connection	Indicates that the device currently installed at the port that is identified is not functioning. The device must be removed from the port before a connection can be made.
Invalid Duplicate - Must remove device before connection	Indicates that the device currently installed at the port that is identified is already installed at another port for the device to which you are attempting to connect and the device cannot support the number of devices installed. The duplicate device must be removed from the port before a connection can be made.
Requires Configuration	Indicates that the device installed at the port that is identified requires configuration before a connection can be made.
Accept All	Accepts all configuration changes and continues the device connection process.
Cancel	Cancels the device connection process.

Common Symptoms and Corrective Actions

Drive does not Start from Start or Run Inputs wired to the terminal block.

Cause(s)	Indication	Corrective Action
Drive is Faulted	Flashing red status light	Clear fault. • Press Stop • Cycle power • "Clear Faults" on the HIM Diagnostic menu.
Incorrect input wiring. See Installation Instructions, publication 750-IN001, for wiring examples. • 2 wire control requires Run, Run Forward, Run Reverse or Jog input. • 3 wire control requires Start and Stop inputs. • Verify 24 Volt Common is connected to Digital Input Common.	None	Wire inputs correctly.
Incorrect digital input programming. • Mutually exclusive choices have been made (i.e., Jog and Jog Forward). • 2 wire and 3 wire programming may be conflicting. • Start configured without a Stop configured.	None	Configure input function.
	Flashing yellow status light and "DigIn Cnfg B" or "DigIn Cnfg C" indication on LCD HIM. P936 [Drive Status 2] shows type 2 alarm(s).	Resolve input function conflicts.
Terminal block does not have control.	None	Check P324 [Logic Mask].

Drive does not Start from HIM.

Cause(s)	Indication	Corrective Action
Drive is configured for 2 wire level control.	None	Change P150 [Digital In Conf] to correct control function.
Another device has Manual control.	None	
Port does not have control.	None	Change P324 [Logic Mask] to enable correct port.

Drive does not respond to changes in speed command.

Cause(s)	Indication	Corrective Action
No value is coming from the source of the command.	LCD HIM Status Line indicates "At Speed" and output is 0 Hz.	1. If the source is an analog input, check wiring and use a meter to check for presence of signal. 2. Check P2 [Commanded SpdRef] for correct source. (See page 54)
Incorrect reference source has been programmed.	None	3. Check P545 [Spd Ref A Sel] for the source of the speed reference. (See page 119) 4. Reprogram P545 [Spd Ref A Sel] for correct source. (See page 119)
Incorrect Reference source is being selected via remote device or digital inputs.	None	5. Check P935 [Drive Status 1], page 163, bits 12 and 13 for unexpected source selections. 6. Check P220 [Digital In Sts], page 78 to see if inputs are selecting an alternate source. 7. Check configuration of P173…175 [DI Speed Sel *n*] functions

Motor and/or drive does not accelerate to commanded speed.

Cause(s)	Indication	Corrective Action
Acceleration time is excessive.	None	Reprogram P535/536 [Accel Time X]. (See page 118)
Excess load or short acceleration times force the drive into current limit, slowing or stopping acceleration.	None	Check P935 [Drive Status 1], bit 27 to see if the drive is in Current Limit. (See page 163) Remove excess load or reprogram P535/536 [Accel Time *n*].(See page 118)
Speed command source or value is not as expected.	None	Check for the proper Speed Command using Steps 1…7 in "Drive does not respond to changes in speed command."
Programming is preventing the drive output from exceeding limiting values.	None	Check P520 [Max Fwd Speed], P521 [Max Rev Speed] (See page 117) and P37 [Maximum Freq] (See page 57) to assure that speed is not limited by programming.

Motor operation is unstable.

Cause(s)	Indication	Corrective Action
Motor data was incorrectly entered or Autotune was not performed.	None	1. Correctly enter motor nameplate data. 2. Perform "Static Tune" or "Rotate Tune" Autotune procedure. See P70 [Autotune] on page 63

Drive does not reverse motor direction.

Cause(s)	Indication	Corrective Action
Digital input is not selected for reversing control.	None	Check that the DI Reversing function is correctly configured.
Digital input is incorrectly wired.	None	Check digital input wiring.
Direction mode parameter is incorrectly programmed.	None	Reprogram P308 [Direction Mode], page 87 for analog "Bipolar" or digital "Unipolar" control.
Motor wiring is improperly phased for reverse.	None	Switch two motor leads.
A bipolar analog speed command input is incorrectly wired or signal is absent.	None	1. Use meter to check that an analog input voltage is present. 2. Check bipolar analog signal wiring. Positive voltage commands forward direction. Negative voltage commands reverse direction.

A drive stop results in a Decel Inhibit fault.

Cause(s)	Indication	Corrective Action
The bus regulation feature is enabled and is halting deceleration due to excessive bus voltage. Excess bus voltage is normally due to excessive regenerated energy or unstable AC line input voltages. Internal timer has halted drive operation.	Decel Inhibit fault screen. LCD Status Line indicates "Faulted."	1. To eliminate any "Adjust Freq" selection, reprogram parameters 372/373 [Bus Reg Mode *n*]. 2. Disable bus regulation (parameters 372/373 [Bus Reg Mode *n*]) and add a dynamic brake. 3. Correct AC input line instability or add an isolation transformer. 4. Access P409 [Dec Inhibit Actn] to select desired fault action. 5. Reset drive.

A datalink cannot be established.

Cause(s)	Indication	Corrective Action
Another device is communicating with the processor.	None	1. Verify that DeviceLogix is not running (Port 14, P53 [DLX Operation] = 5 "Logic Disabled.") 2. Verify that a PLC is not communication with the drive. Disconnect communication cable or inhibit communication in PLC software.

PowerFlex 755 Lifting/ Torque Proving

Review the Attention statement that follows if you intend to use the TorqProve™ feature without an encoder. TorqProve only applies to PowerFlex 755 drives.

ATTENTION: You must read the following information before you can use TorqProve with no encoder.

Encoderless TorqProve must be limited to lifting applications where personal safety is not a concern. Encoders offer additional protection and must be used where personal safety is a concern. Encoderless TorqProve cannot hold a load at zero speed without a mechanical brake and does not offer additional protection if the brake slips/fails. Loss of control in suspended load applications can cause personal injury and/or equipment damage.

It is your responsibility to configure drive parameters, test any lifting functionality and meet safety requirements in accordance with all applicable codes and standards. If encoderless TorqProve is desired, you must certify the safety of the application. To acknowledge that you have read this "Attention" and properly certified their encoderless application, bit 3 ("EnclsTrqProv") of [Mtr Options Cfg], parameter 40 must be changed to a "1." This action removes Alarm 28, "TP Encls Config" and allow bit 1 of Parameter 1100 to be changed to a "1" enabling encoderless TorqProve.

For more information on TorqProve applications, refer to Appendix C on page 455.

External Brake Resistor

ATTENTION: The drive does not offer protection for externally mounted brake resistors. A risk of fire exists if external braking resistors are not protected. External resistor packages must be self-protected from over temperature or a circuit equivalent to the one shown here must be supplied.

Figure 4 - External Brake Resistor Circuitry

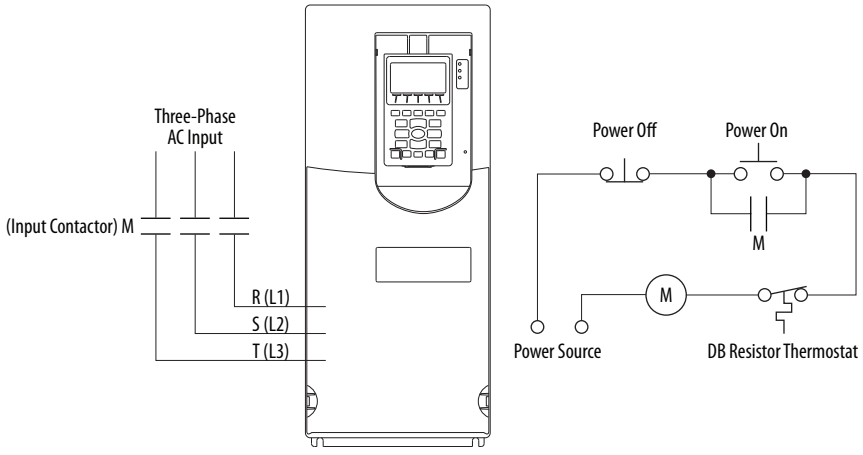

This circuit is designed to remove input voltage to the drive if the line voltage is high and forces dynamic braking to operate continuously.

Technical Support Options

What You Need When You Call Tech Support

When you contact Technical Support, please be prepared to provide the following information:

- Order number
- Product catalog number and drives series number (if applicable)
- Product serial number
- Firmware revision level
- Fault code listed in P951 [Last Fault Code]
- Installed options and port assignments

Also be prepared with:

- A description of your application
- A detailed description of the problem
- A brief history of the drive installation
- First-time installation, product has not been running
- Established installation, product has been running

The data that is contained in the following parameters help in initial troubleshooting of a faulted drive. You can use this table to record the data provided in each parameter listed.

Parameter(s)	Name	Description	Parameter Data
956	Fault Frequency	Captures and displays the output speed of drive at time of last fault.	
957	Fault Amps	Captures and displays motor amps at time of last fault.	
958	Fault Bus Volts	Captures and displays the DC bus voltage of drive at time of last fault.	
954	Status1 at Fault	Captures and displays [Drive Status 1] bit pattern at time of last fault.	
955	Status2 at Fault	Captures and displays [Drive Status 2] bit pattern at time of last fault.	
962	AlarmA at Fault	Captures and displays [Alarm Status A] bit pattern at time of last fault.	
963	AlarmB at Fault	Captures and displays [Alarm Status B] bit pattern at time of last fault.	
951	Last Fault Code	A code that represents the fault that tripped the drive.	

Technical Support Wizards

When you are connected to a drive via DriveExplorer or DriveExecutive, you can run a Tech Support wizard to gather information that helps diagnose problems with your drive and/or peripheral device. The wizard gathers information and saves the data as a text file. This file can be emailed to your remote technical support contact.

To run a Tech Support wizard in DriveExplorer, select **Wizards** from the **Actions** menu. In DriveExecutive, select **Wizards** from the **Tools** menu. Or, click the  button. Follow the prompts to complete the wizard.

IMPORTANT The Tech Support wizard cannot be accessed when the Control Bar is launched.

PowerFlex 753 Control Block Diagrams

The block diagrams in this appendix are applicable to firmware revision 11.002 and earlier only.

Flow diagrams on the following pages illustrate the PowerFlex 753 drive control algorithms.

Diagram	Page
Flux Vector Overview	377
VF, SV Overview	378
Speed/Position Feedback	379
Speed Control - Reference Overview	380
Speed Control - Reference (1)	381
Speed Control - Reference (2)	382
Speed Control - Reference (3)	383
Speed Control - Reference (4)	384
Speed Control - Reference (5)	385
Speed Control - Regulator (FV)	386
Position Control - Reference	387
Position Control - Regulator	388
Position Control - Aux Functions	389
Position Control - Homing	390
Torque Control - Overview (IM)	391
Torque Control - Overview (IPM)	392
Torque Control - Reference Scale & Trim	393
Torque Control - Torque	394
Torque Control - Current (IM)	395
Torque Control - Current (IPM)	396
Process Control (1)	397
Process Control (2)	398
MOP Control	399
Embedded Inputs & Outputs - Digital	400
Embedded Inputs & Outputs - Analog	401
22-Series Option Inputs & Outputs - Digital	402
22-Series Option Inputs & Outputs - Analog	403
11-Series Inputs & Outputs - Digital	404
11-Series Inputs & Outputs - Analog	405
11-Series Inputs & Outputs - ATEX	406
Control Logic	407
Inverter Overload IT	408
Variable Boost Voltage Overview	409

Diagram Conventions and Definitions

Definitions of the Per Unit system:
1.0 PU Position = Distance traveled / 1sec at Base Spd
1.0 PU Speed = Base Speed of the Motor
1.0 PU Torque = Base Torque of the Motor

Symbol Legend:

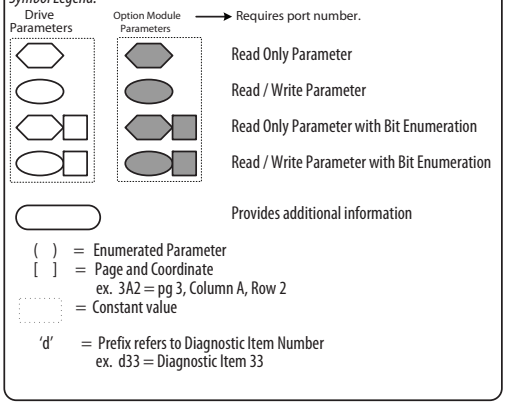

*** Notes,** ***Important*** :

(1) These diagrams are for reference only and may not accurately reflect all logical control signals; actual functionality is implied by the approximated diagrams. Accuracy of these diagrams is not guaranteed.

Figure 5 - Flux Vector Overview

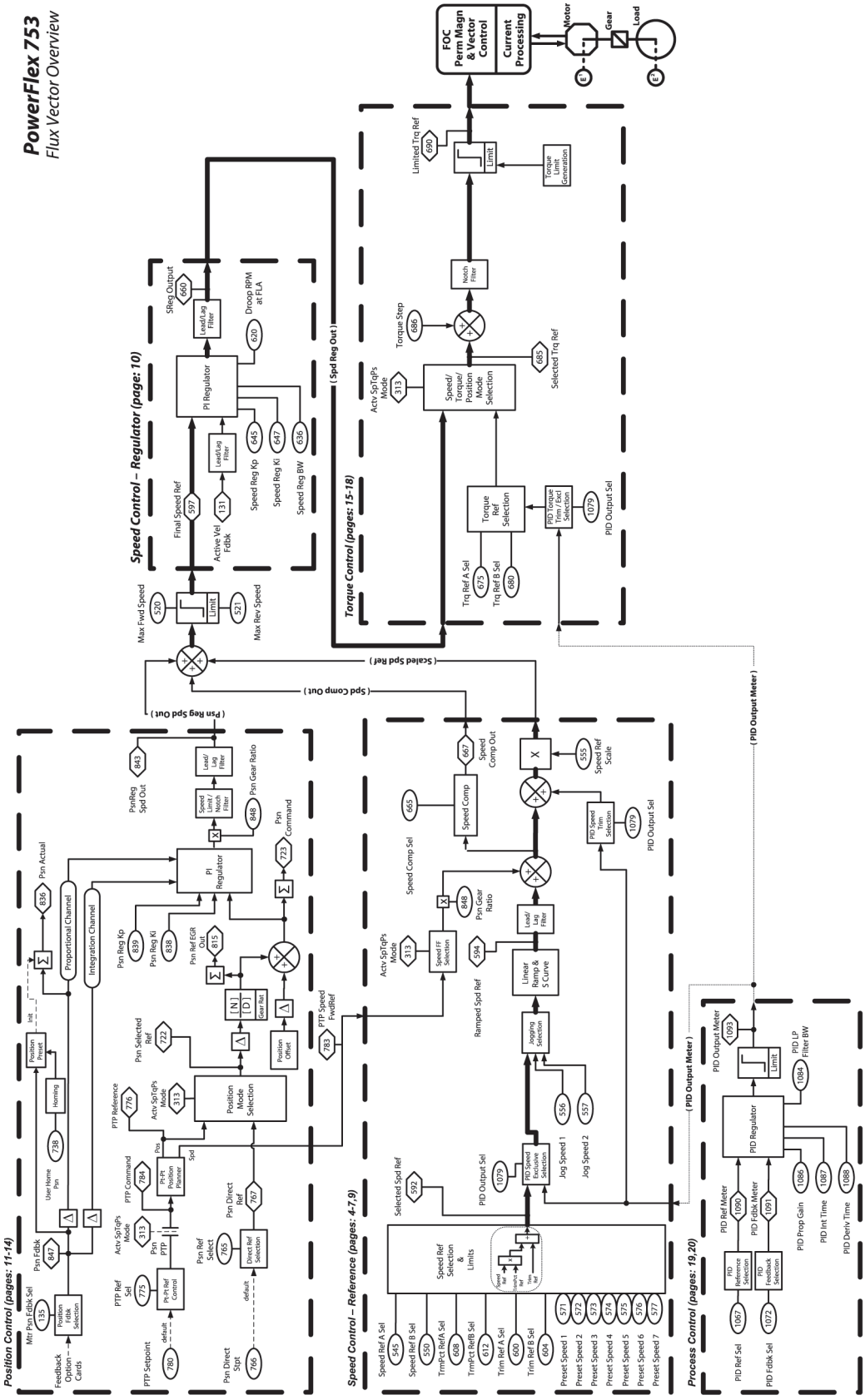

Figure 6 - VF, SV Overview

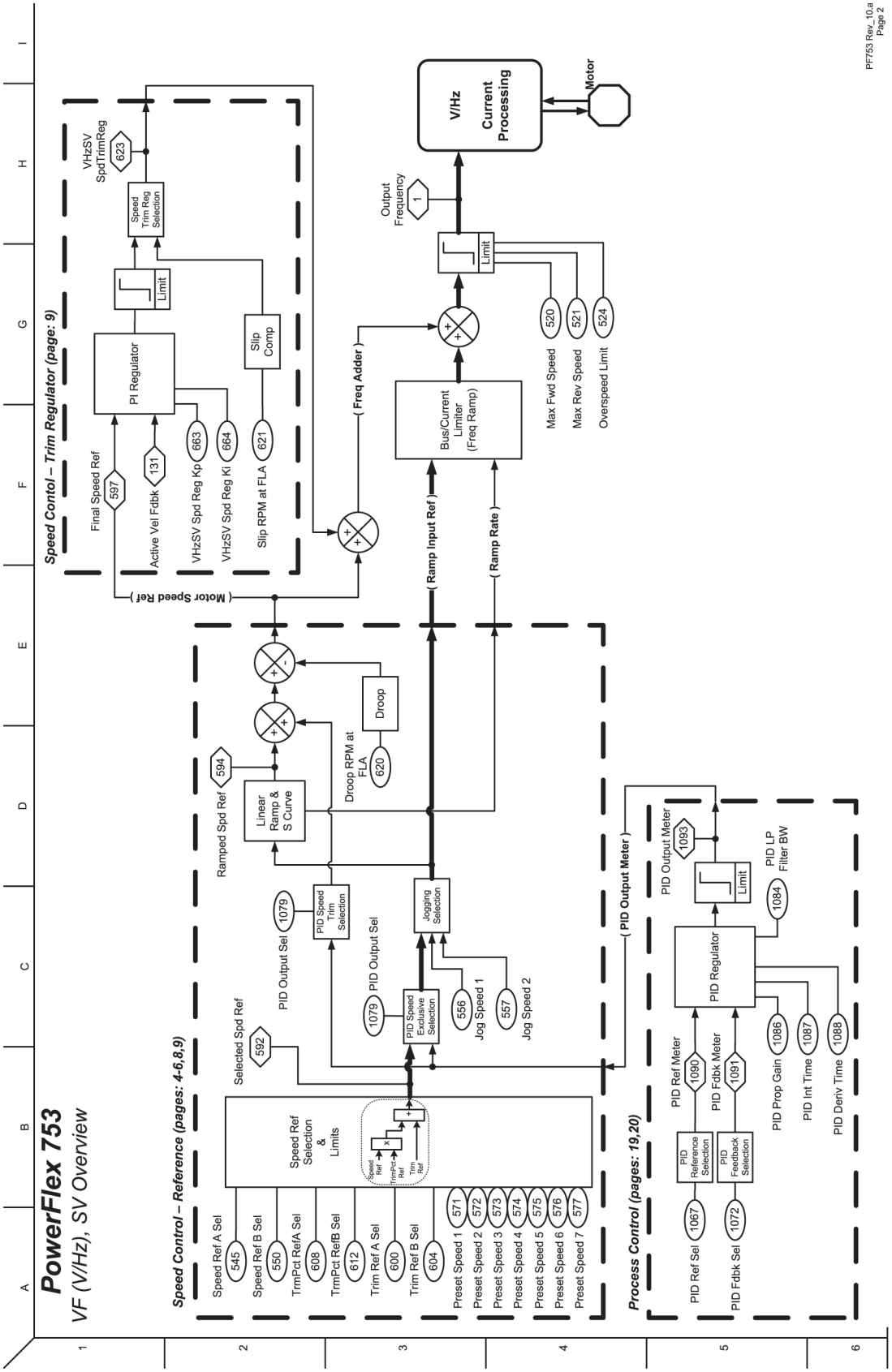

Figure 7 - Speed/Position Feedback

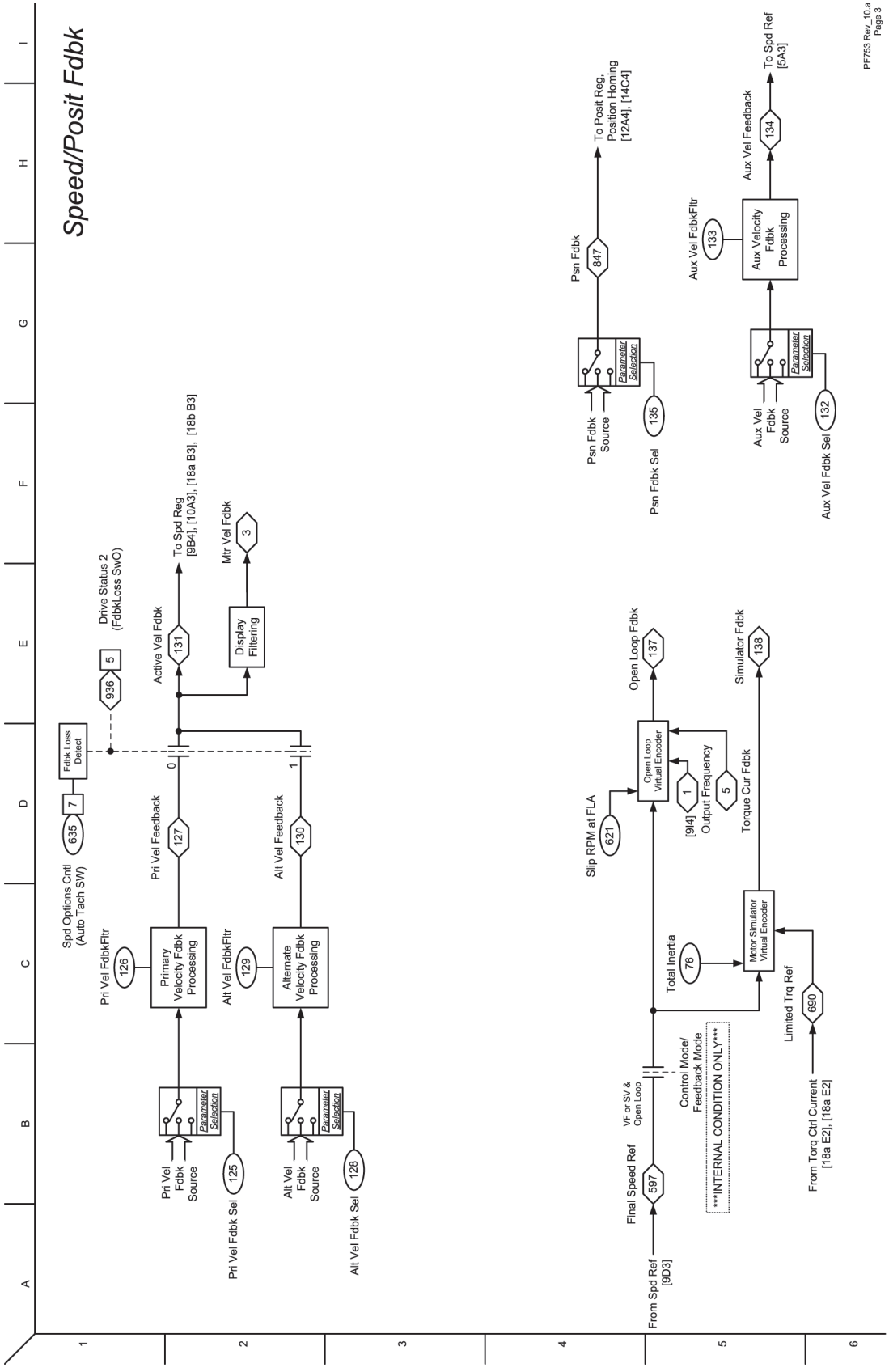

Figure 8 - Speed Control - Reference Overview

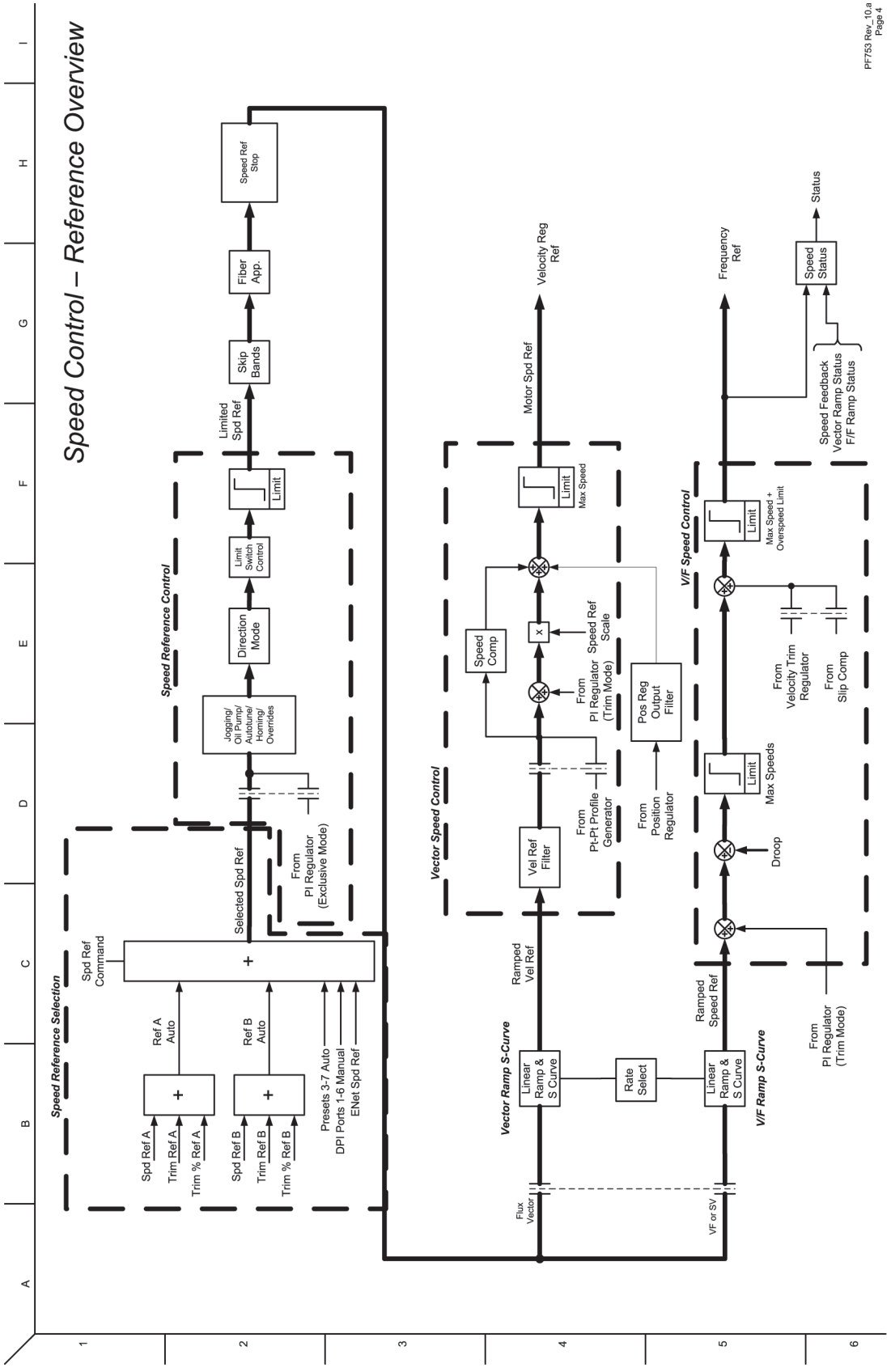

Figure 9 - Speed Control - Reference (1)

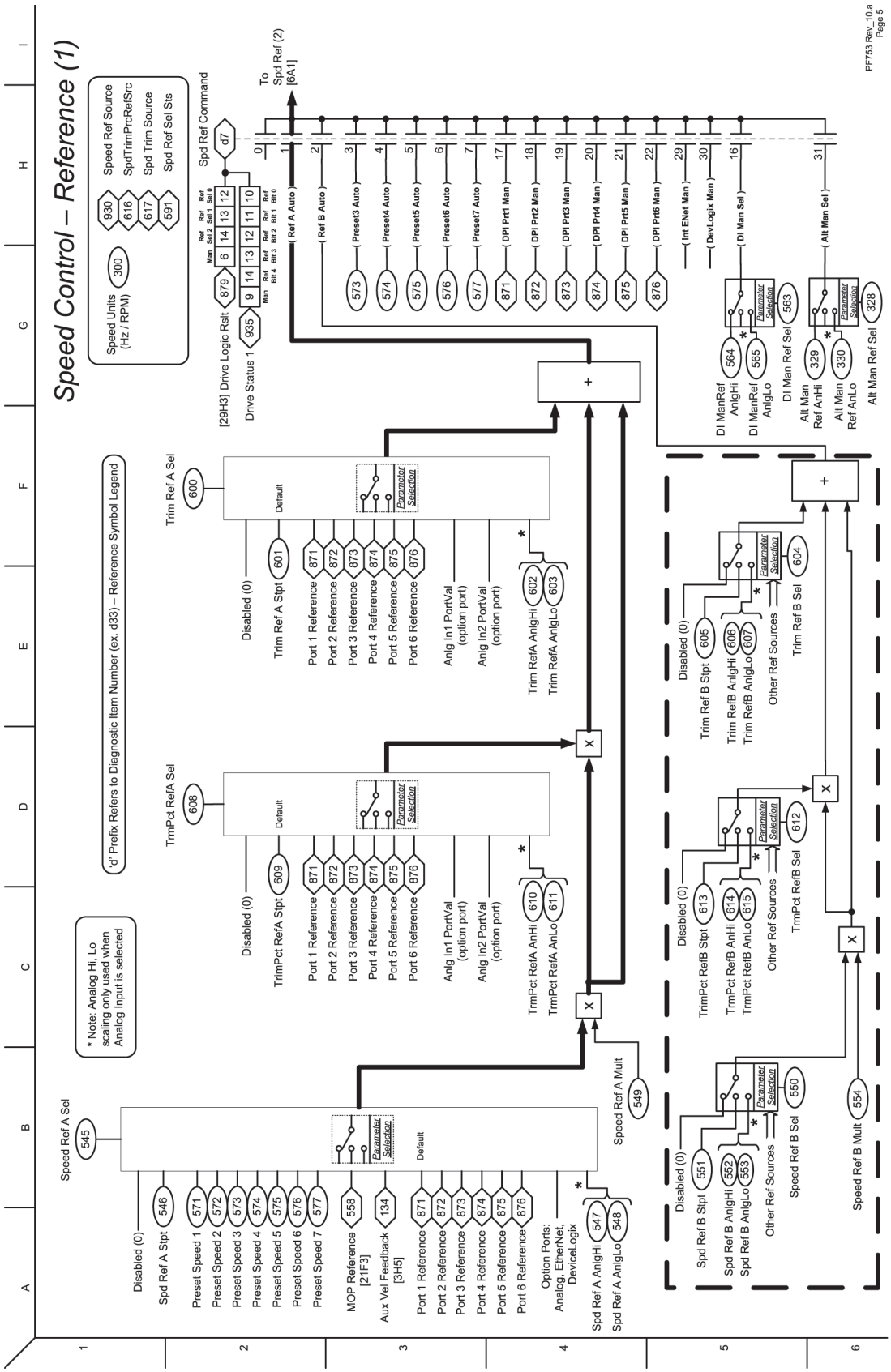

Figure 10 - Speed Control - Reference (2)

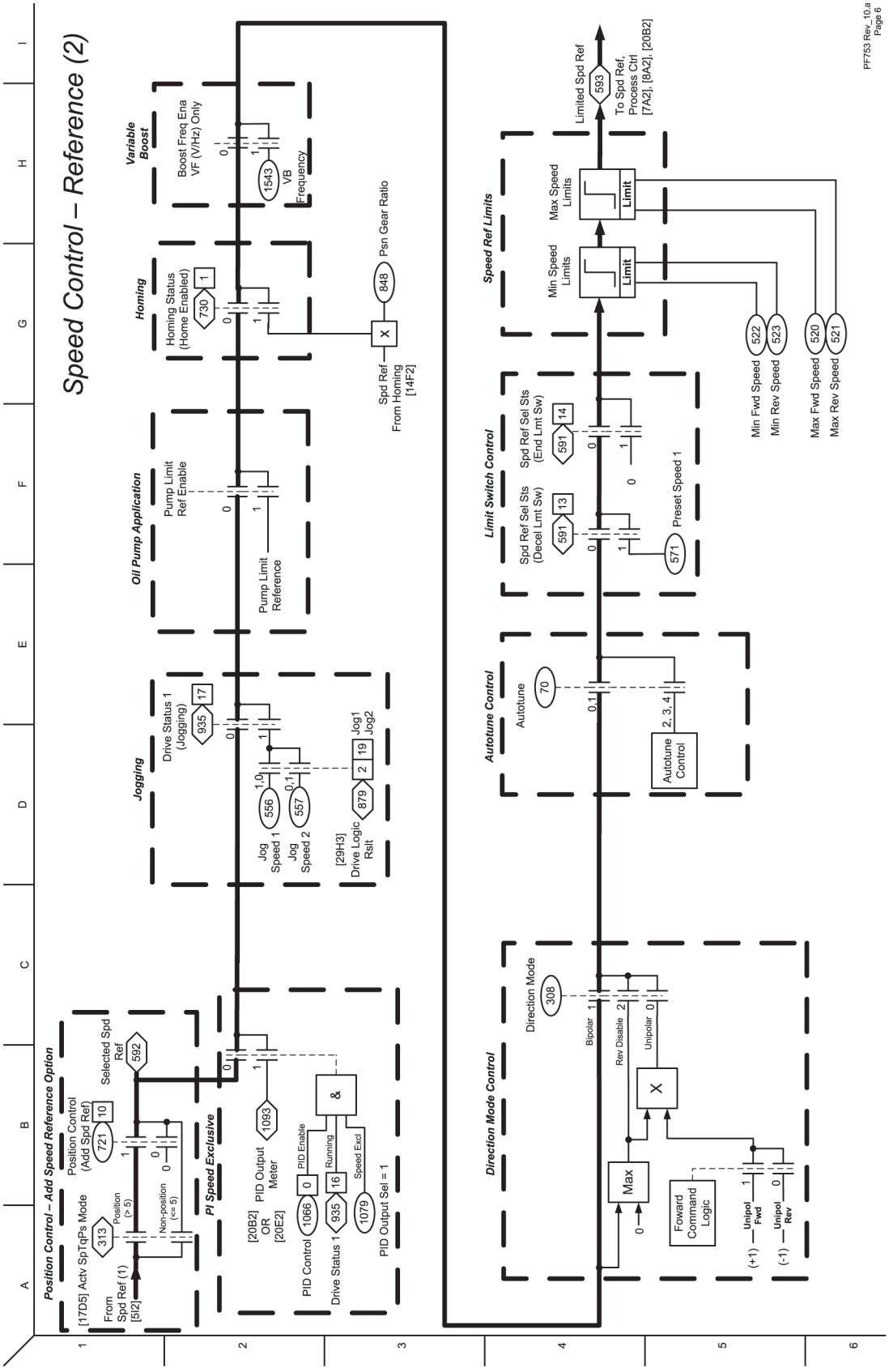

Figure 11 - Speed Control - Reference (3)

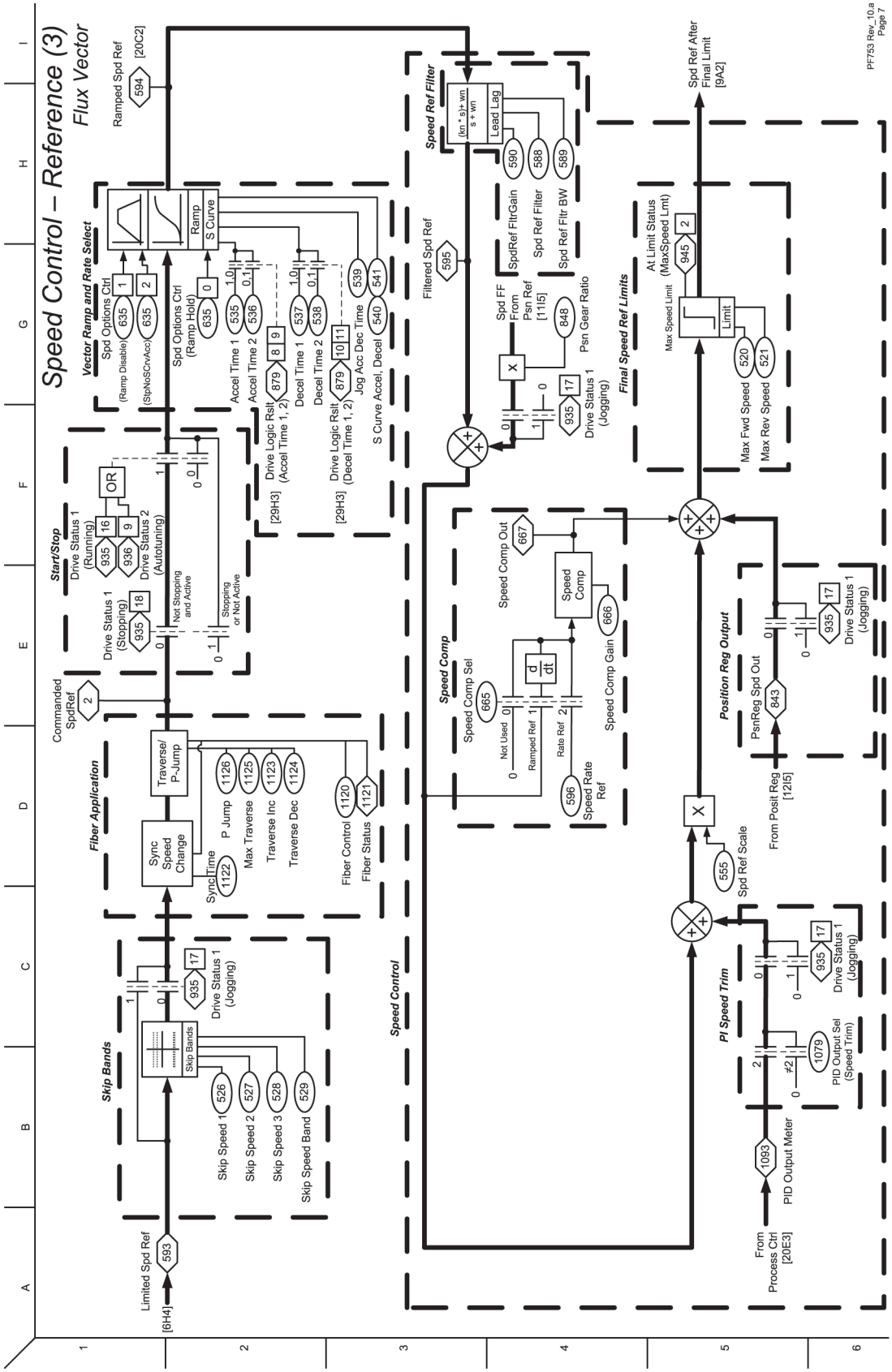

Figure 12 - Speed Control - Reference (4)

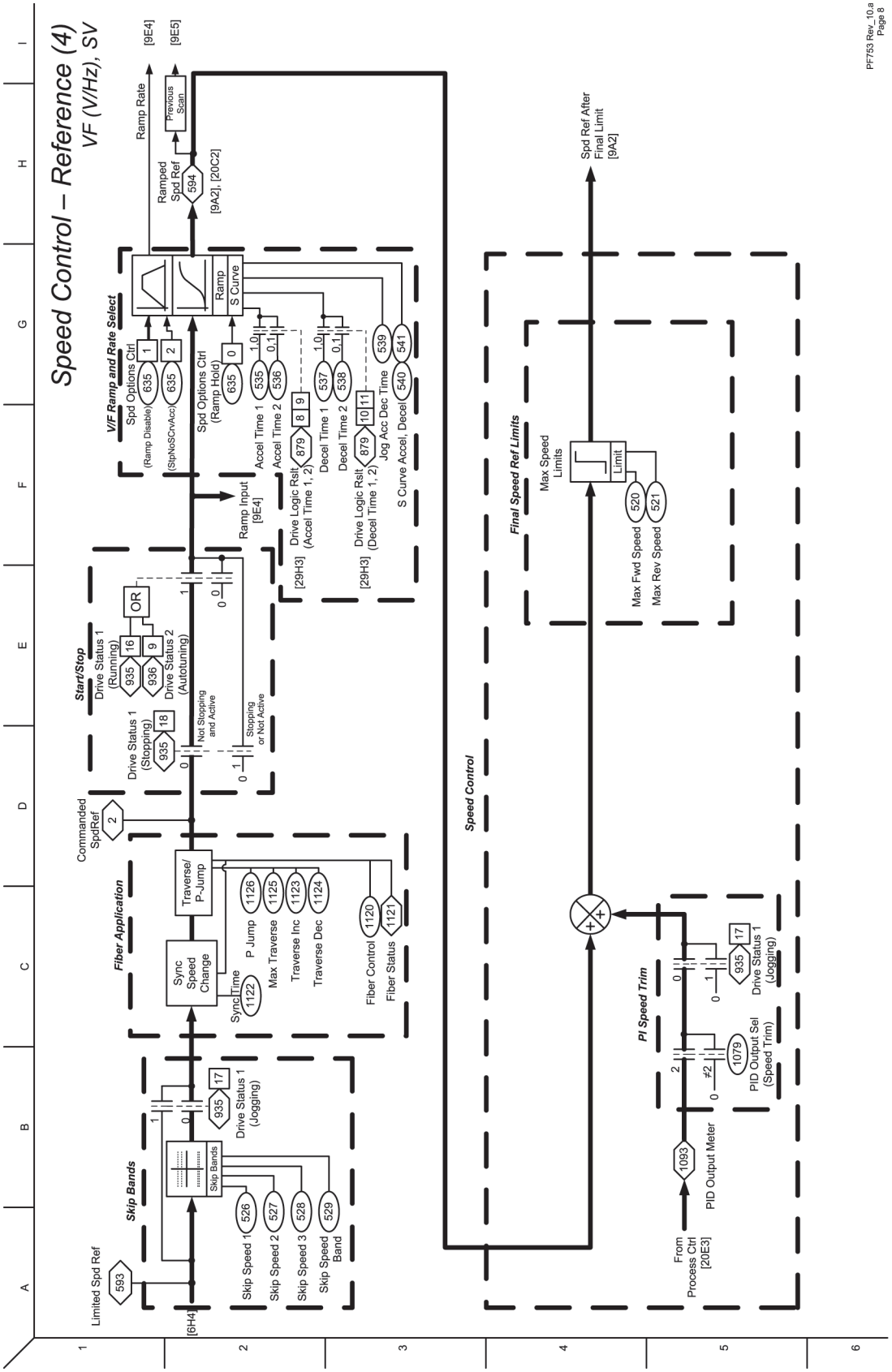

Figure 13 - Speed Control - Reference (5)

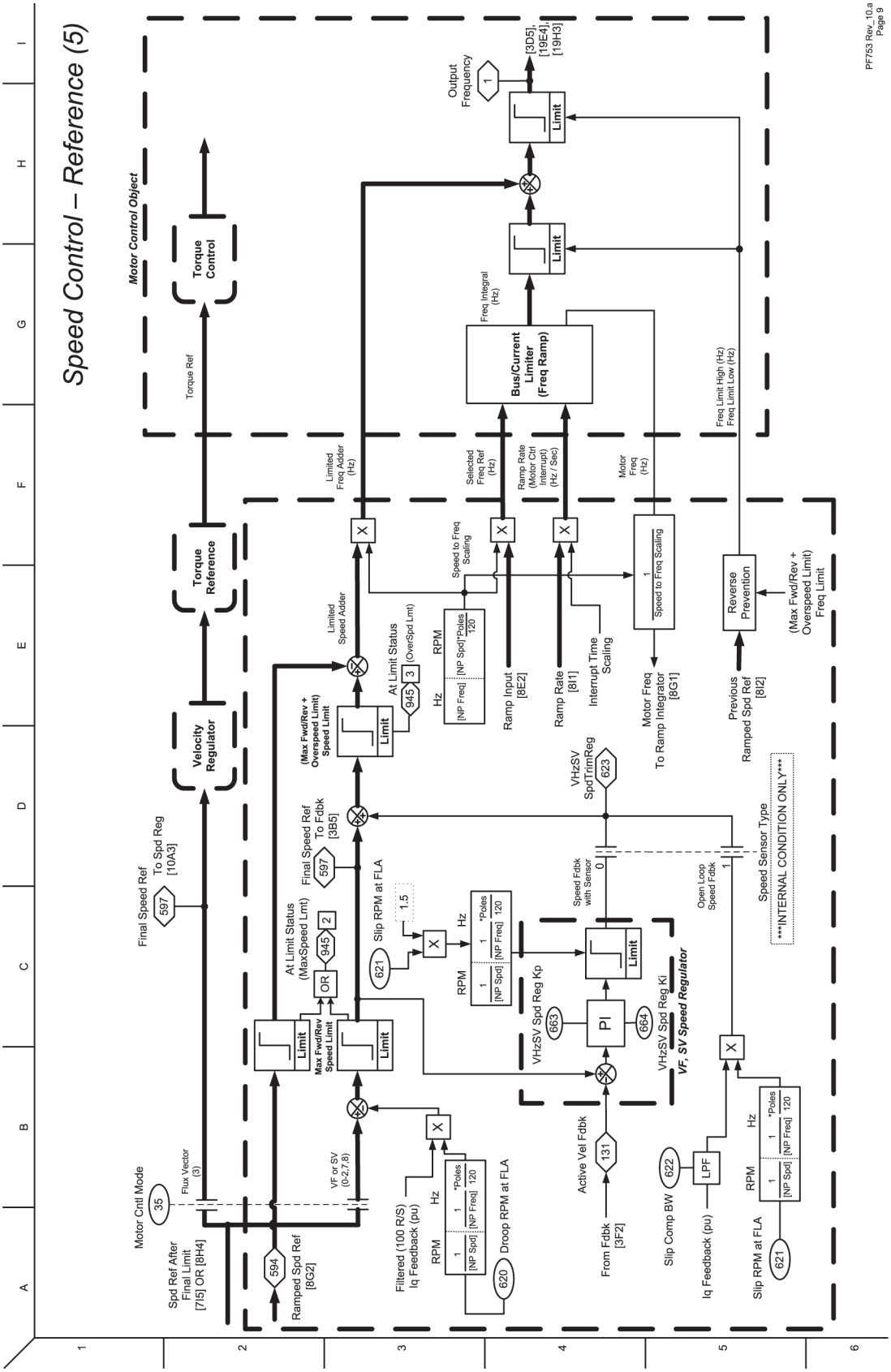

Figure 14 - Speed Control - Regulator (FV)

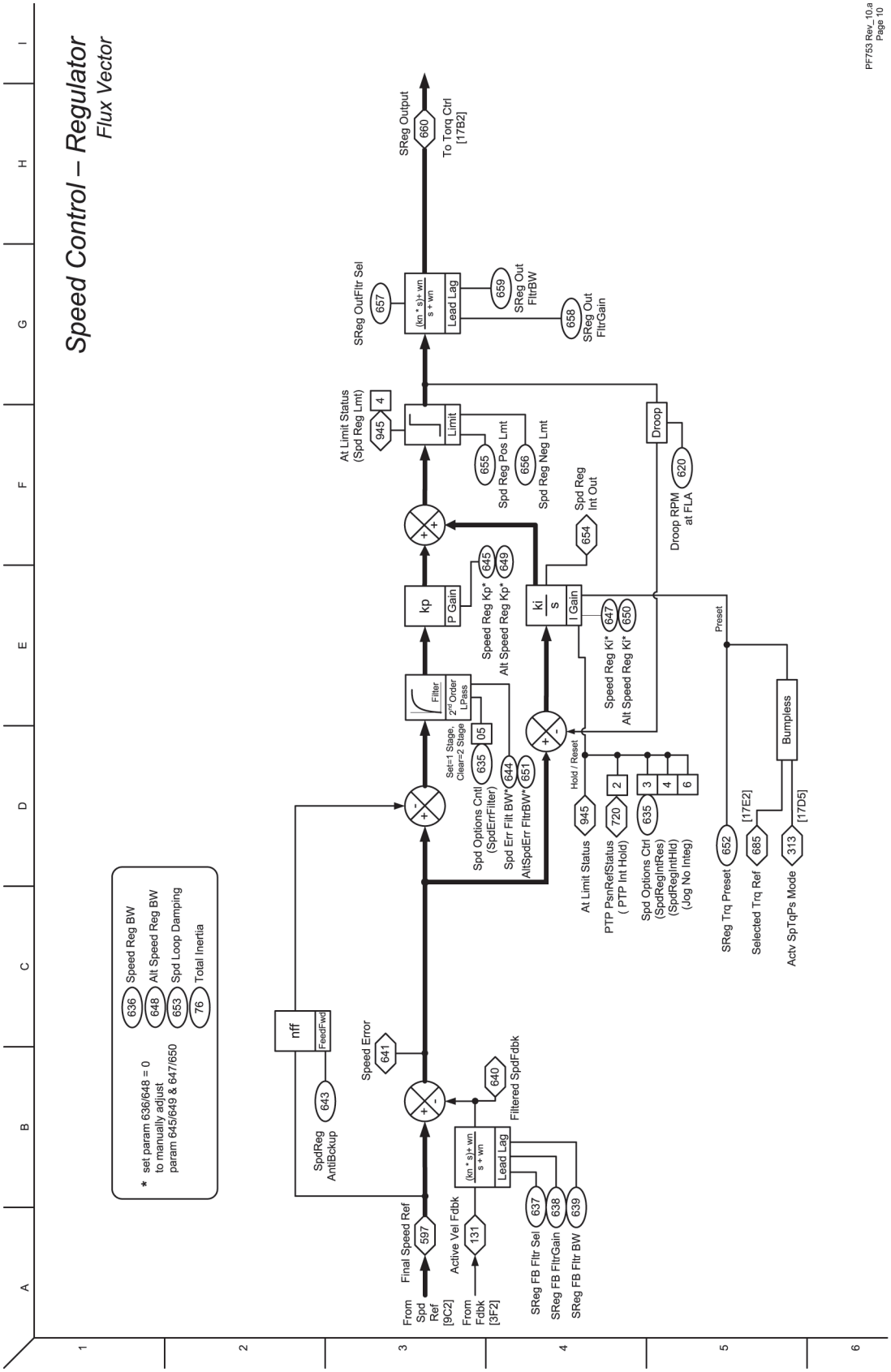

Figure 15 - Position Control - Reference

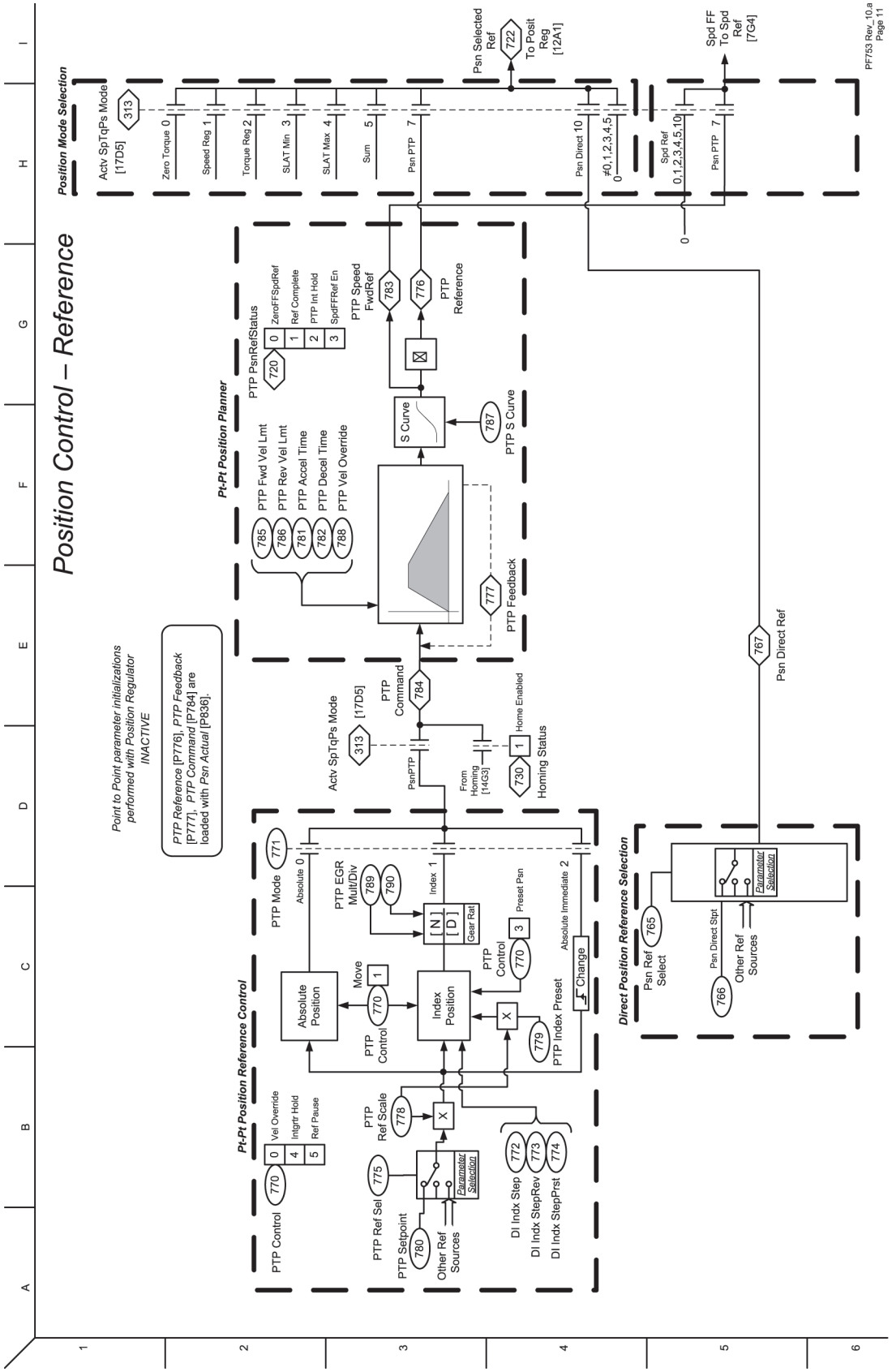

Figure 16 - Position Control - Regulator

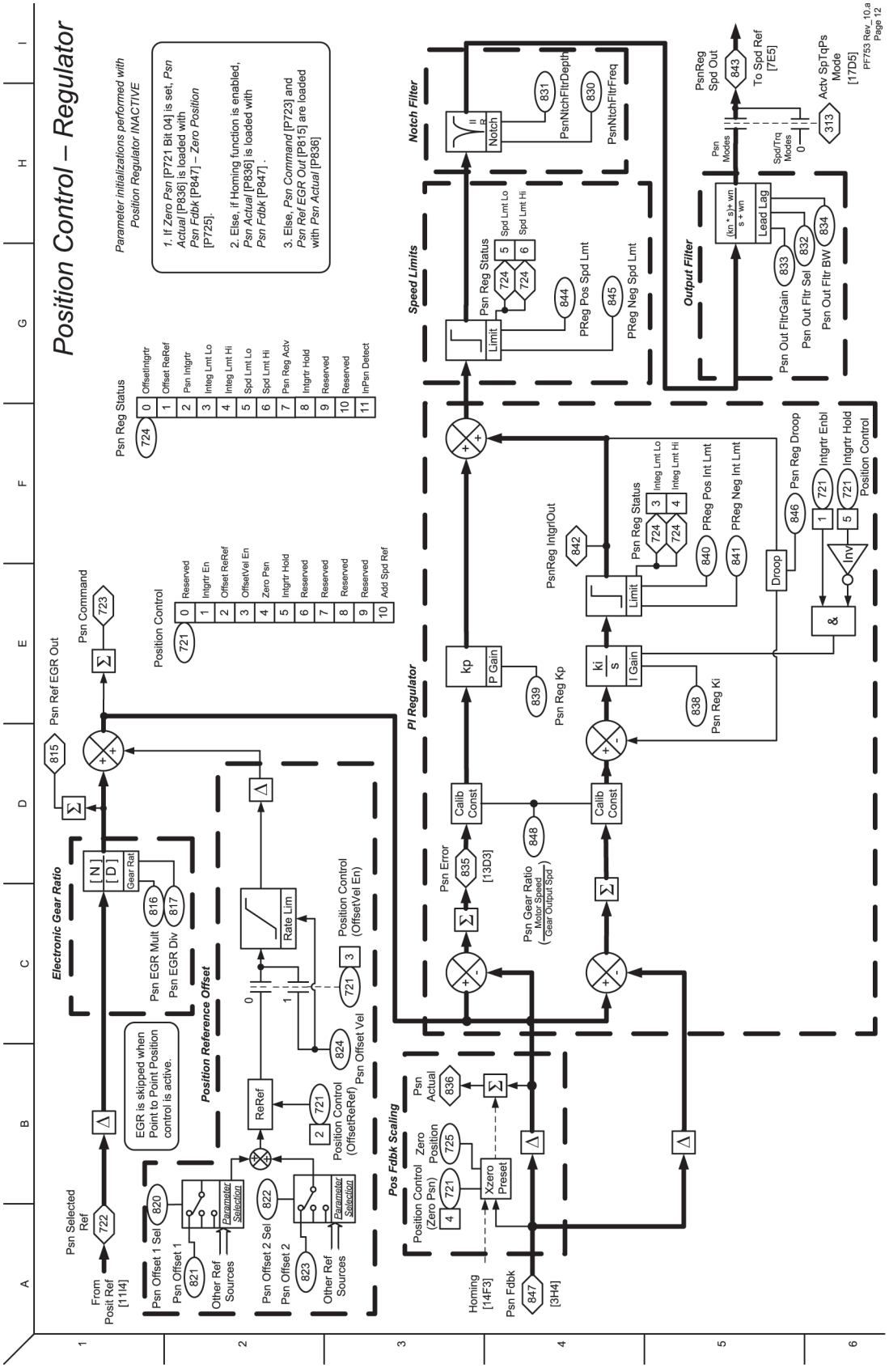

Figure 17 - Position Control - Aux Functions

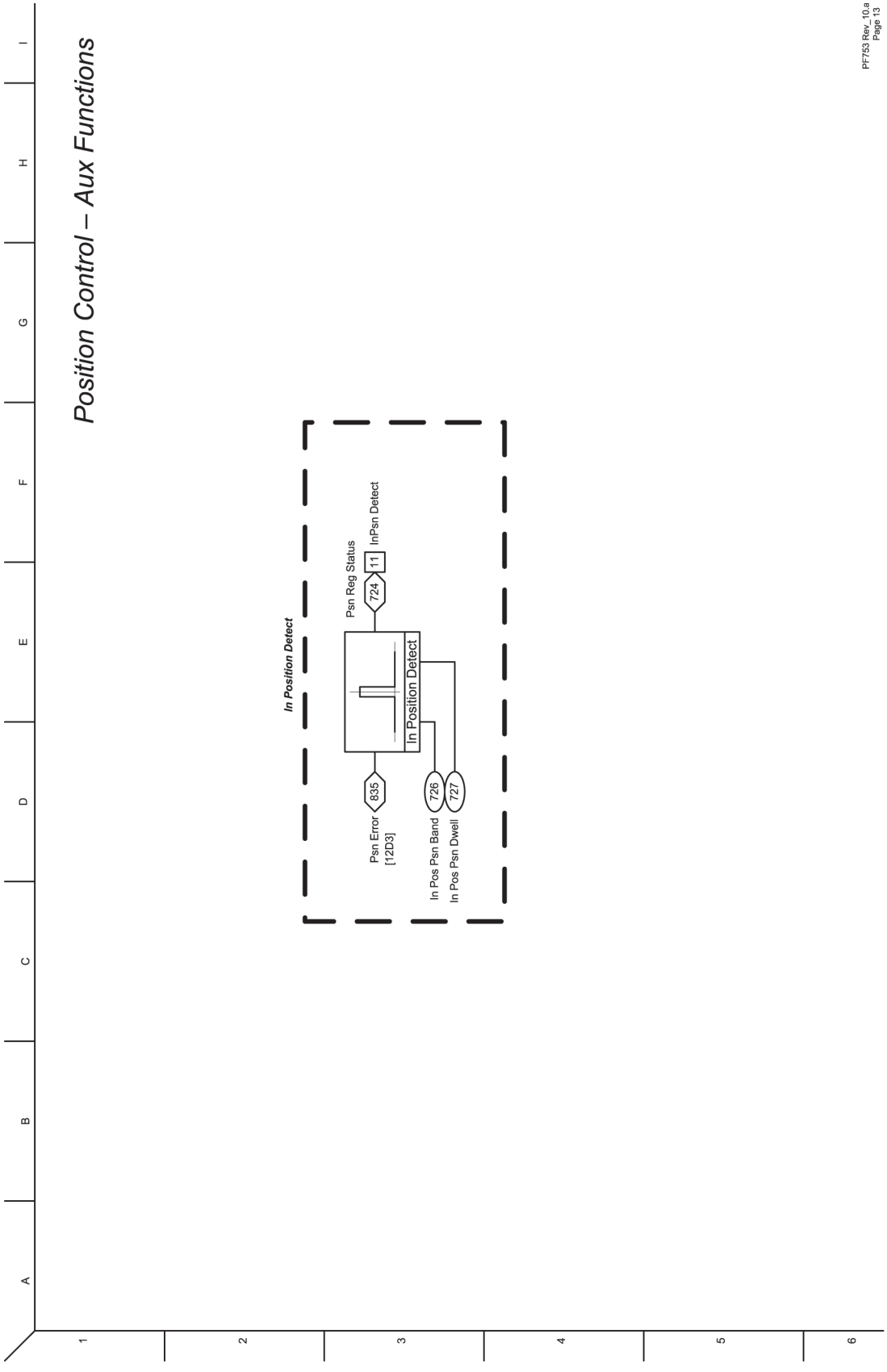

Figure 18 - Position Control - Homing

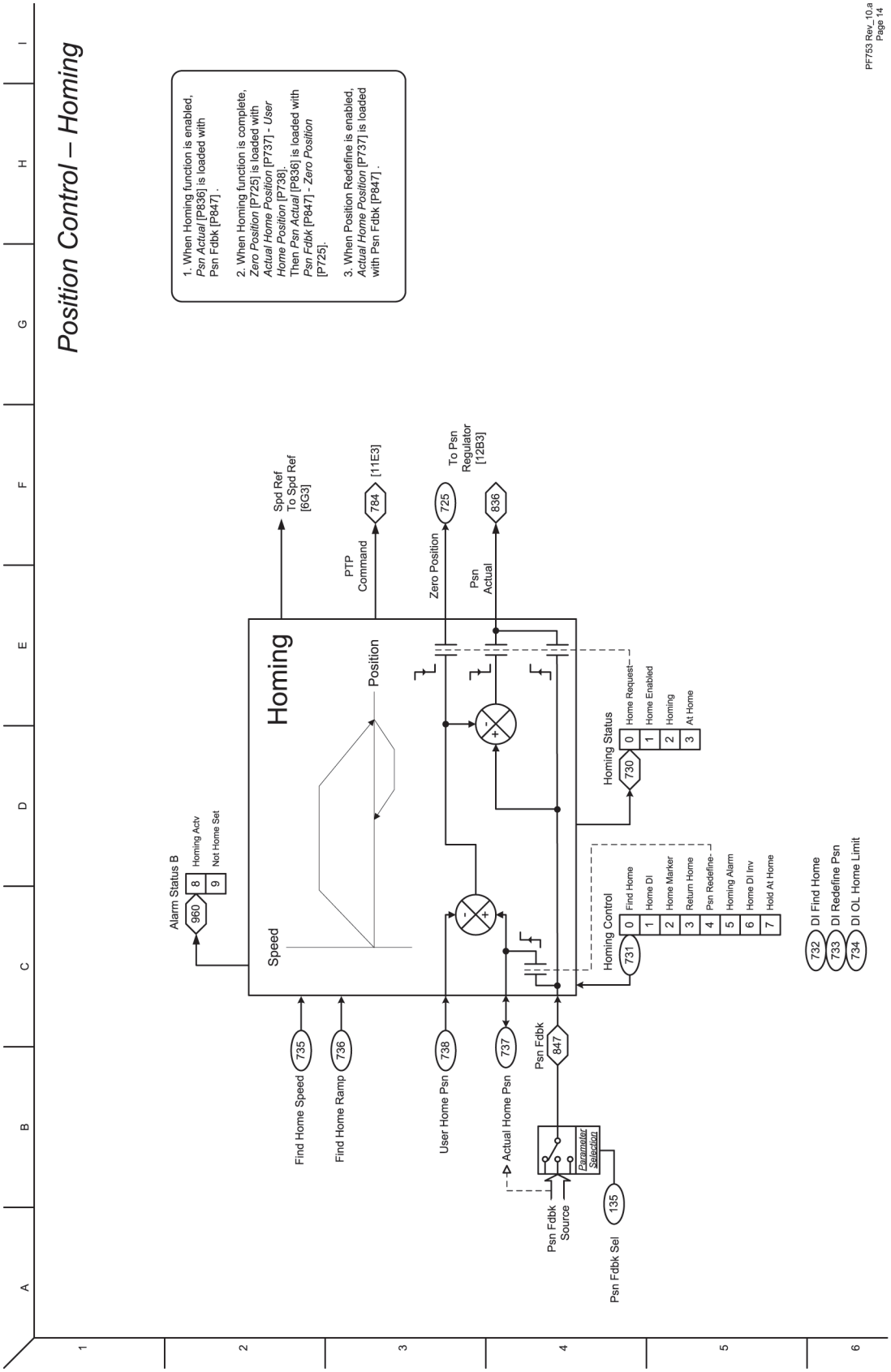

Figure 19 - Torque Control - Overview (IM)

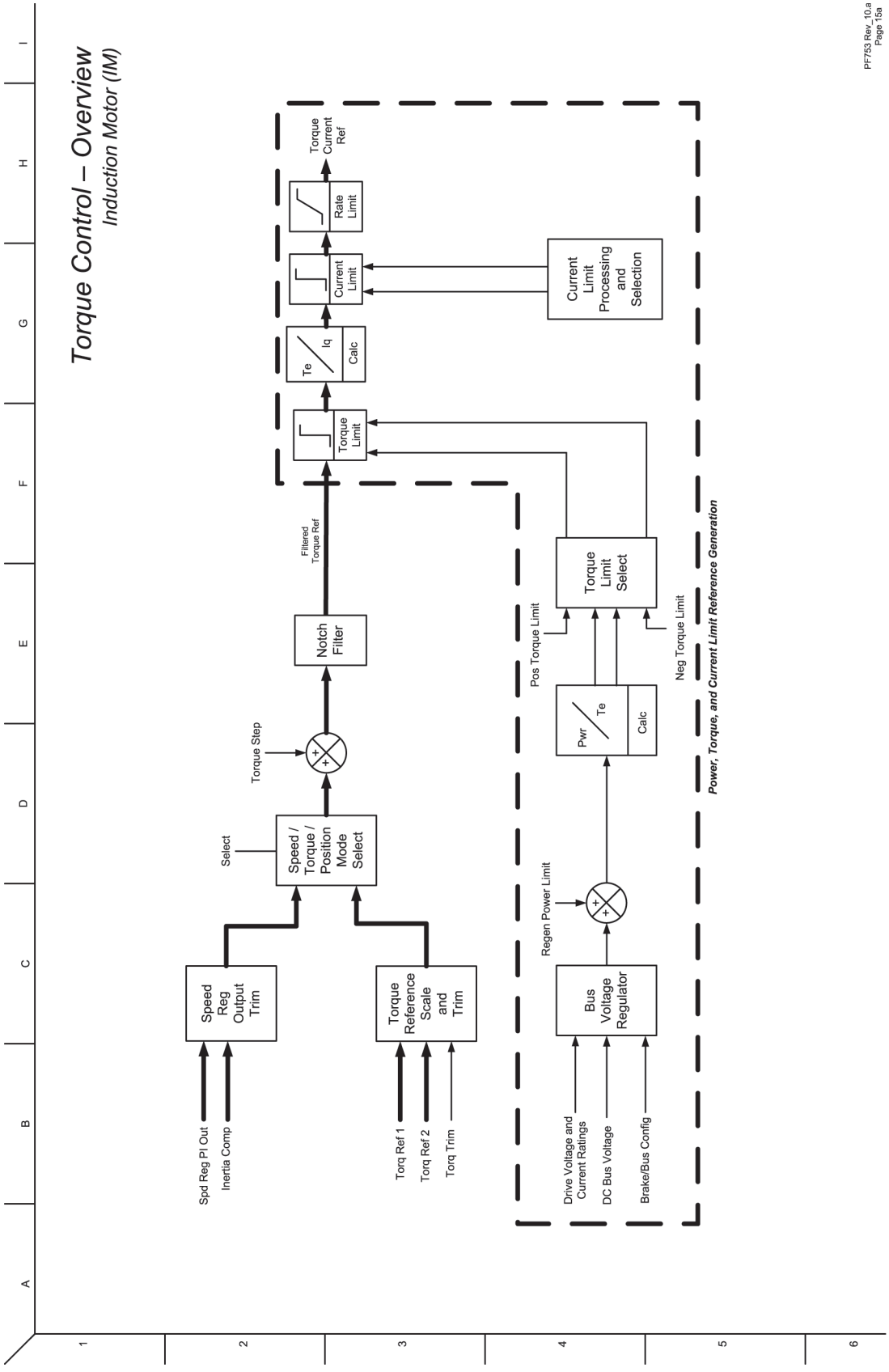

Figure 20 - Torque Control - Overview (IPM)

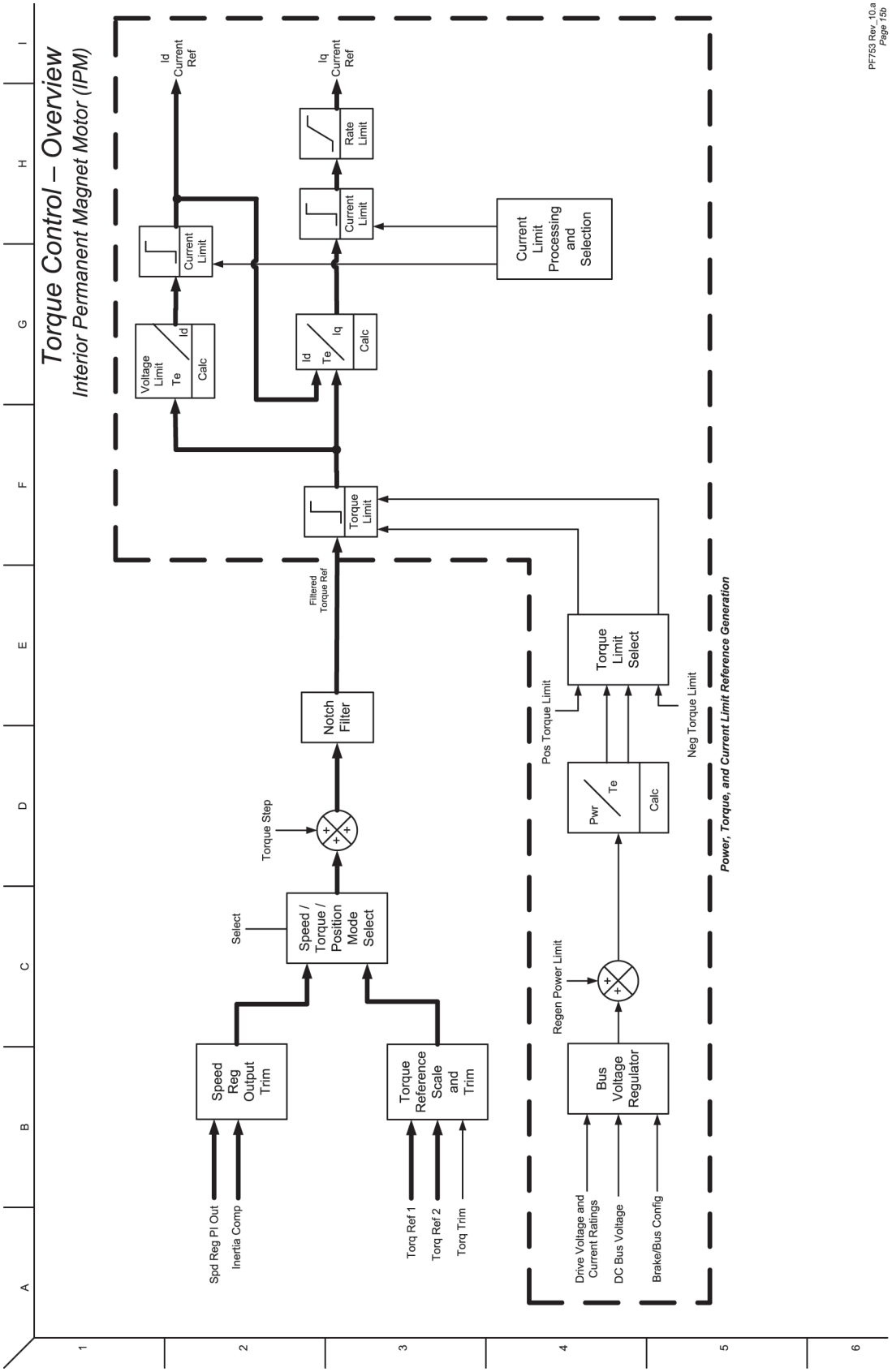

Figure 21 - Torque Control - Reference Scale & Trim

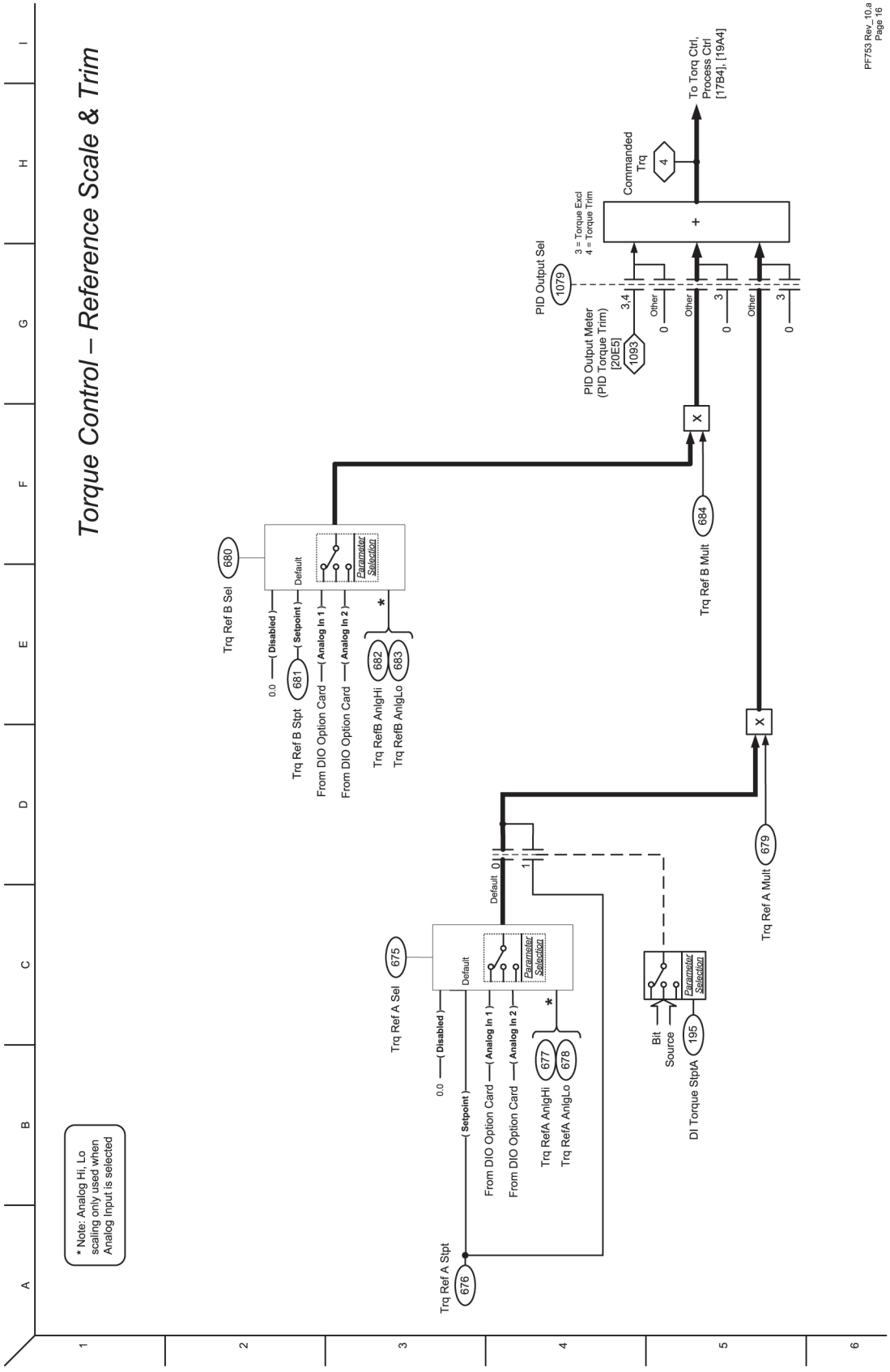

Figure 22 - Torque Control - Torque

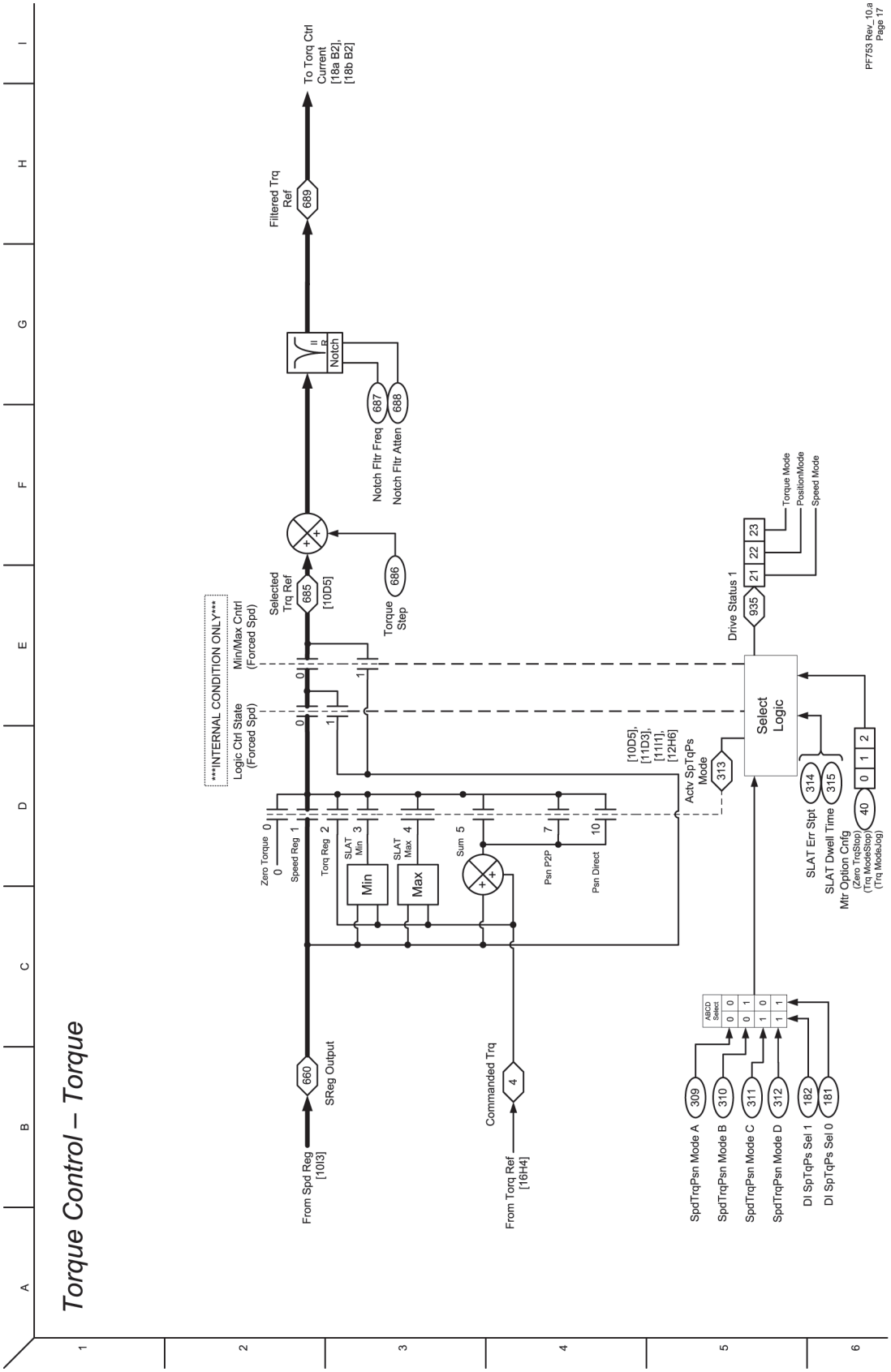

Figure 23 - Torque Control - Current (IM)

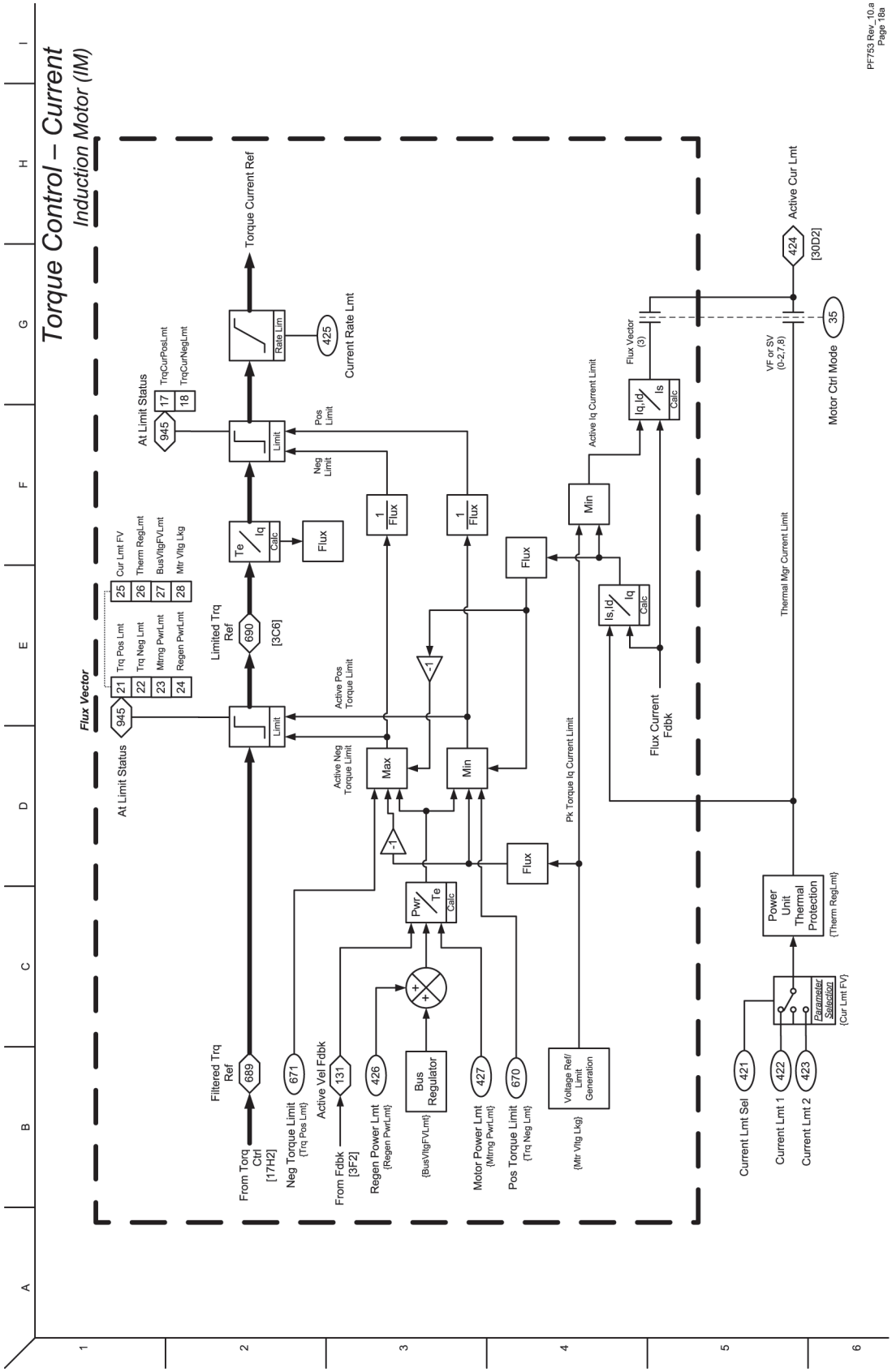

Figure 24 - Torque Control - Current (IPM)

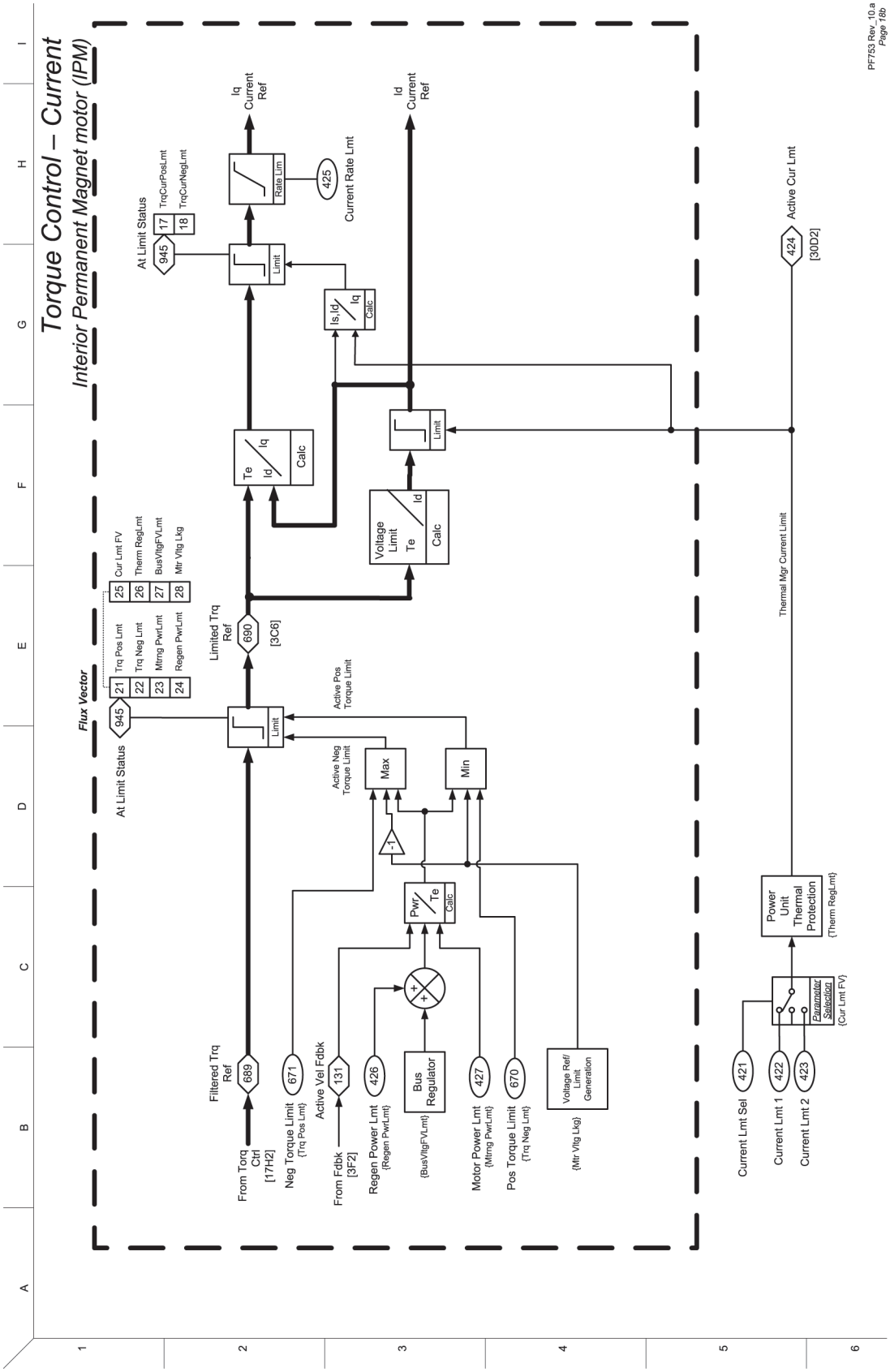

Figure 25 - Process Control (1)

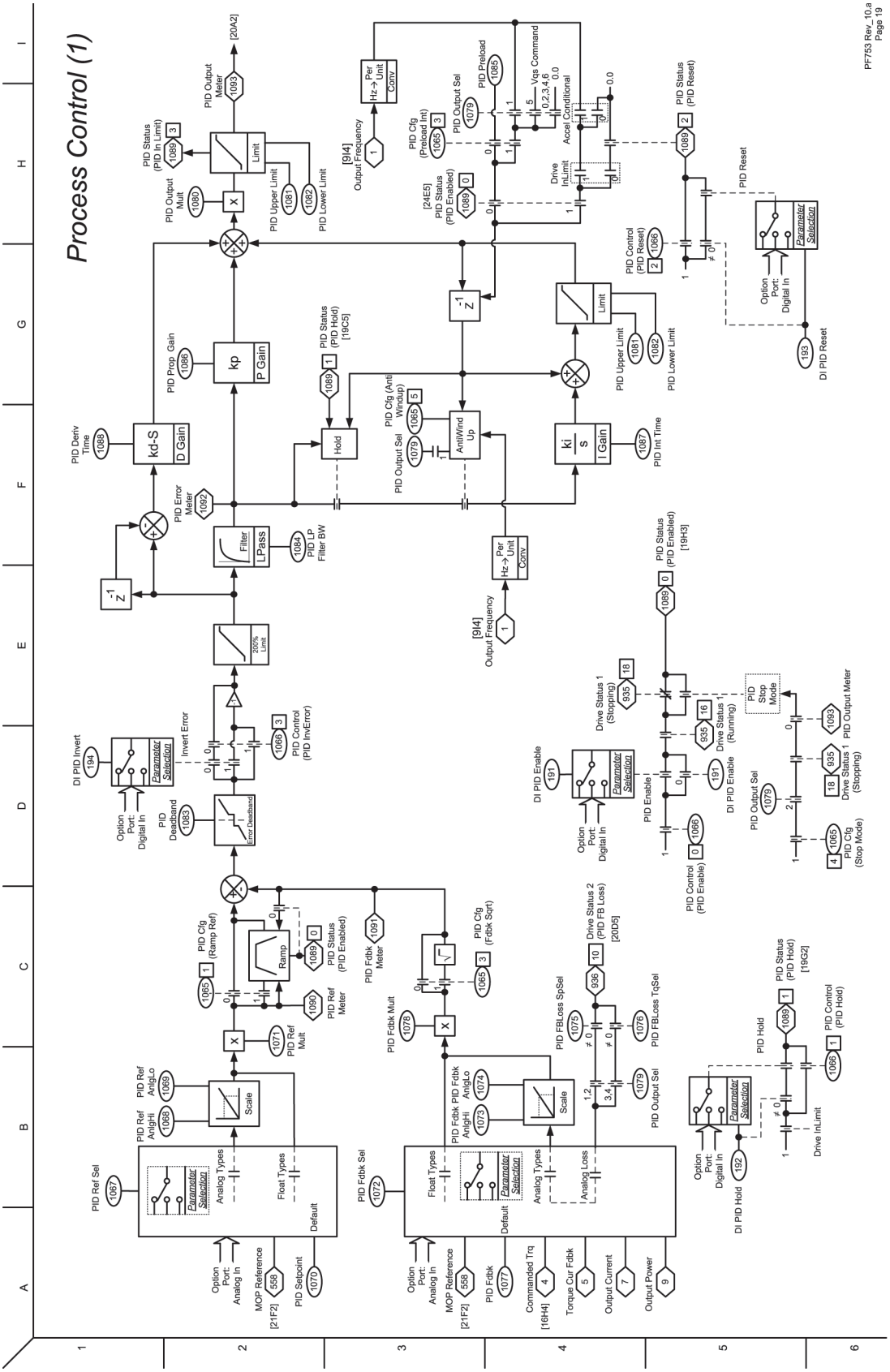

Figure 26 - Process Control (2)

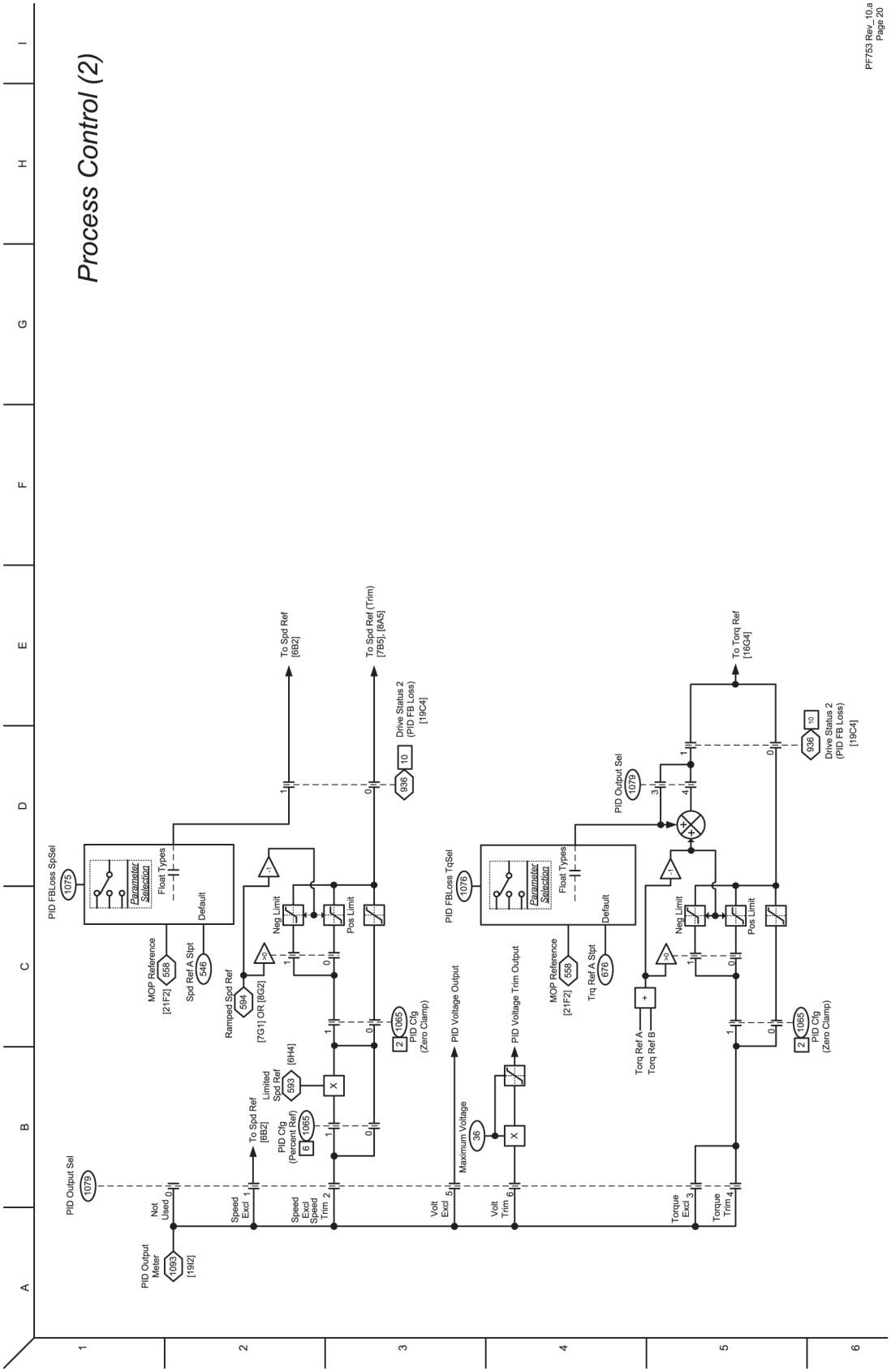

Figure 27 - MOP Control

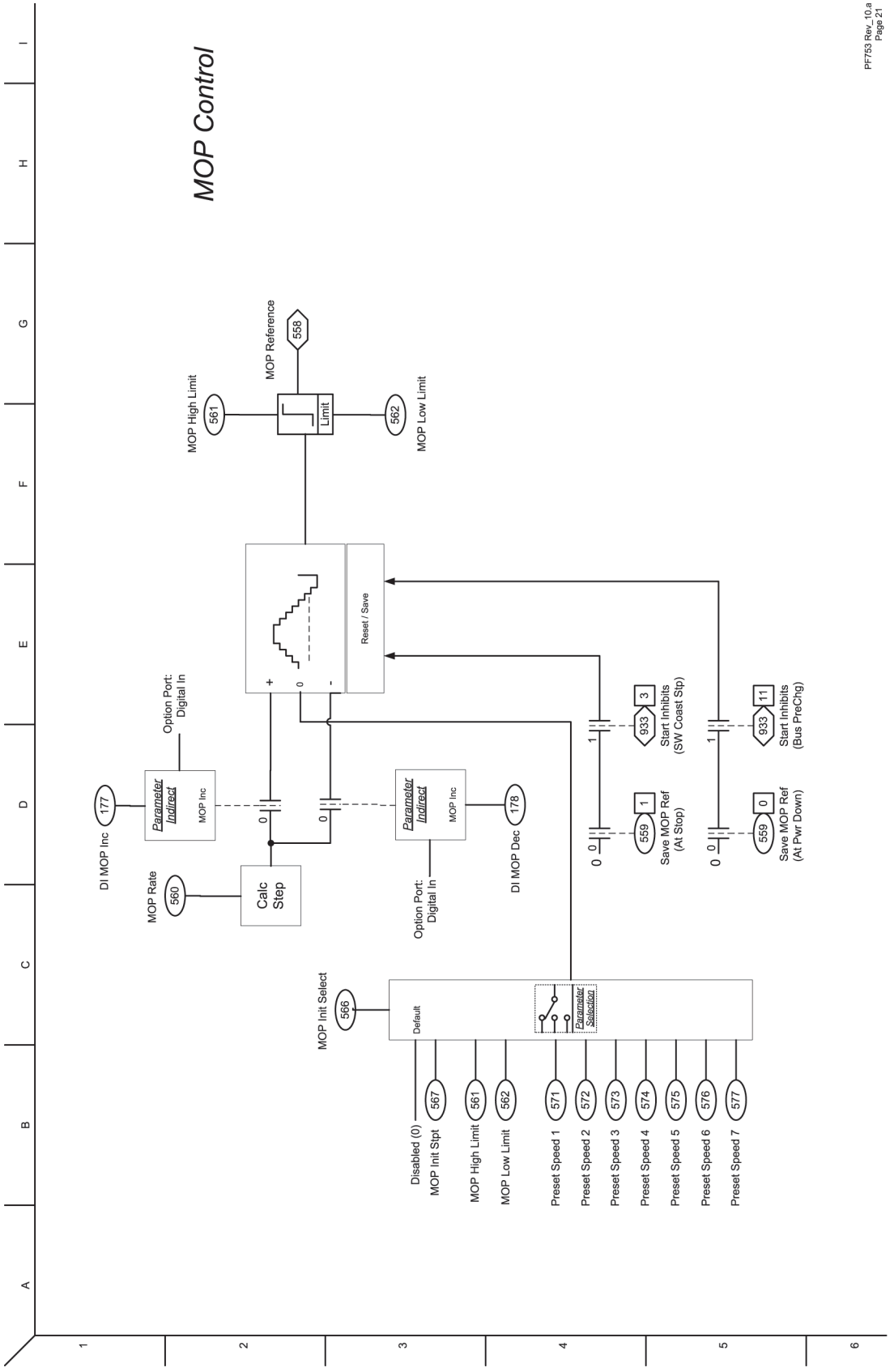

Figure 28 - Embedded Inputs & Outputs - Digital

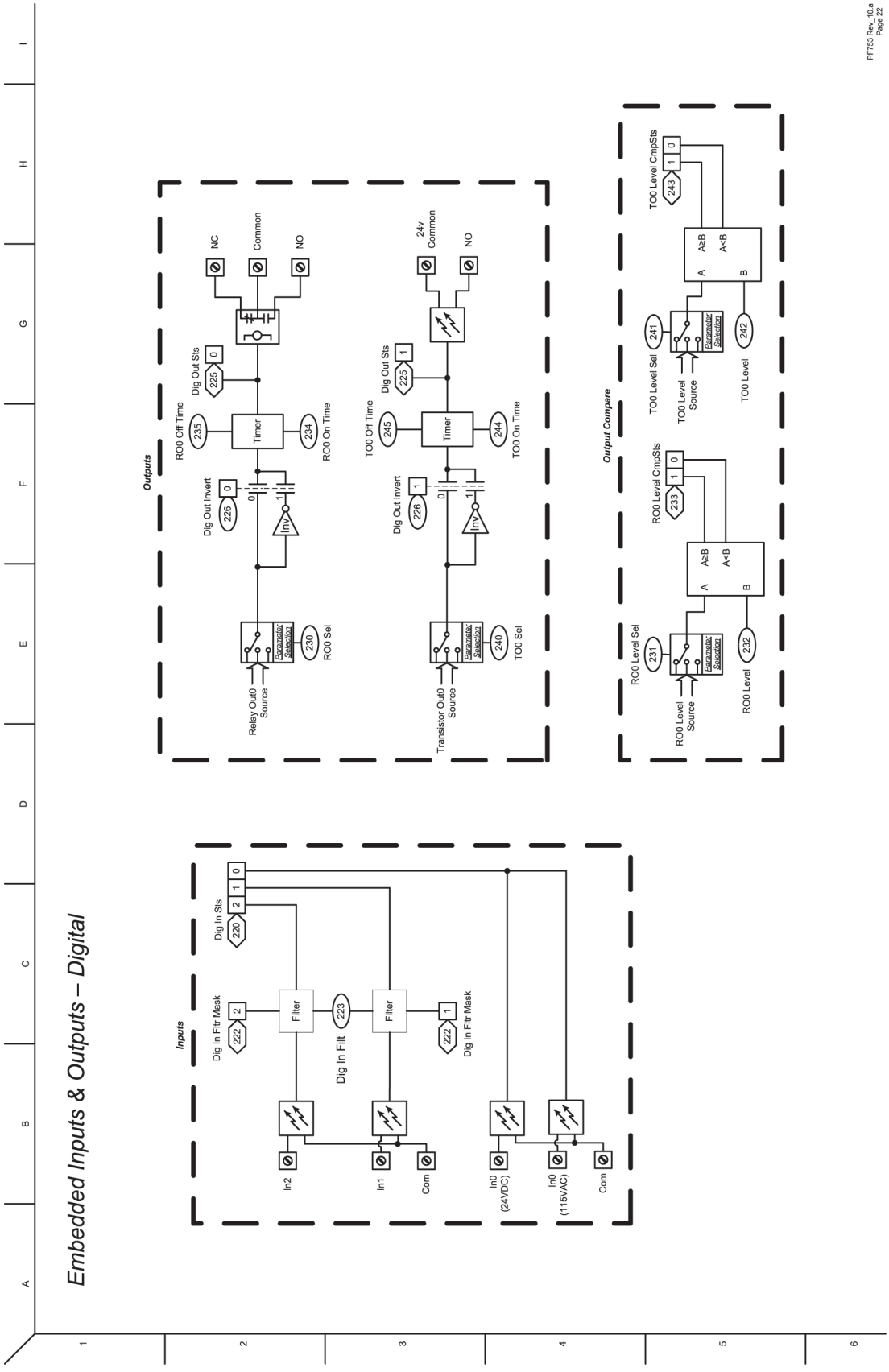

Figure 29 - Embedded Inputs & Outputs - Analog

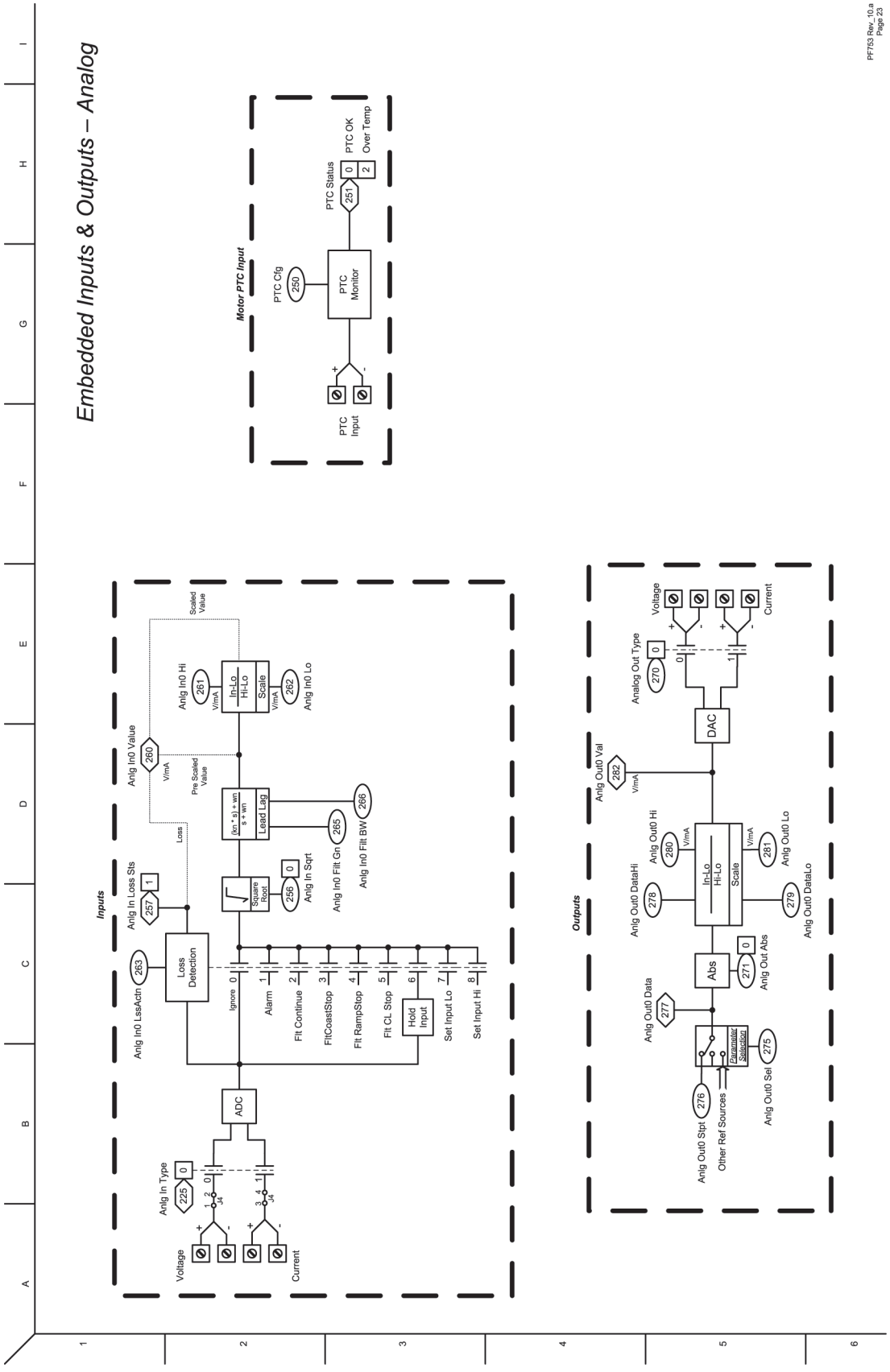

Figure 30 - 22-Series Option Inputs & Outputs - Digital

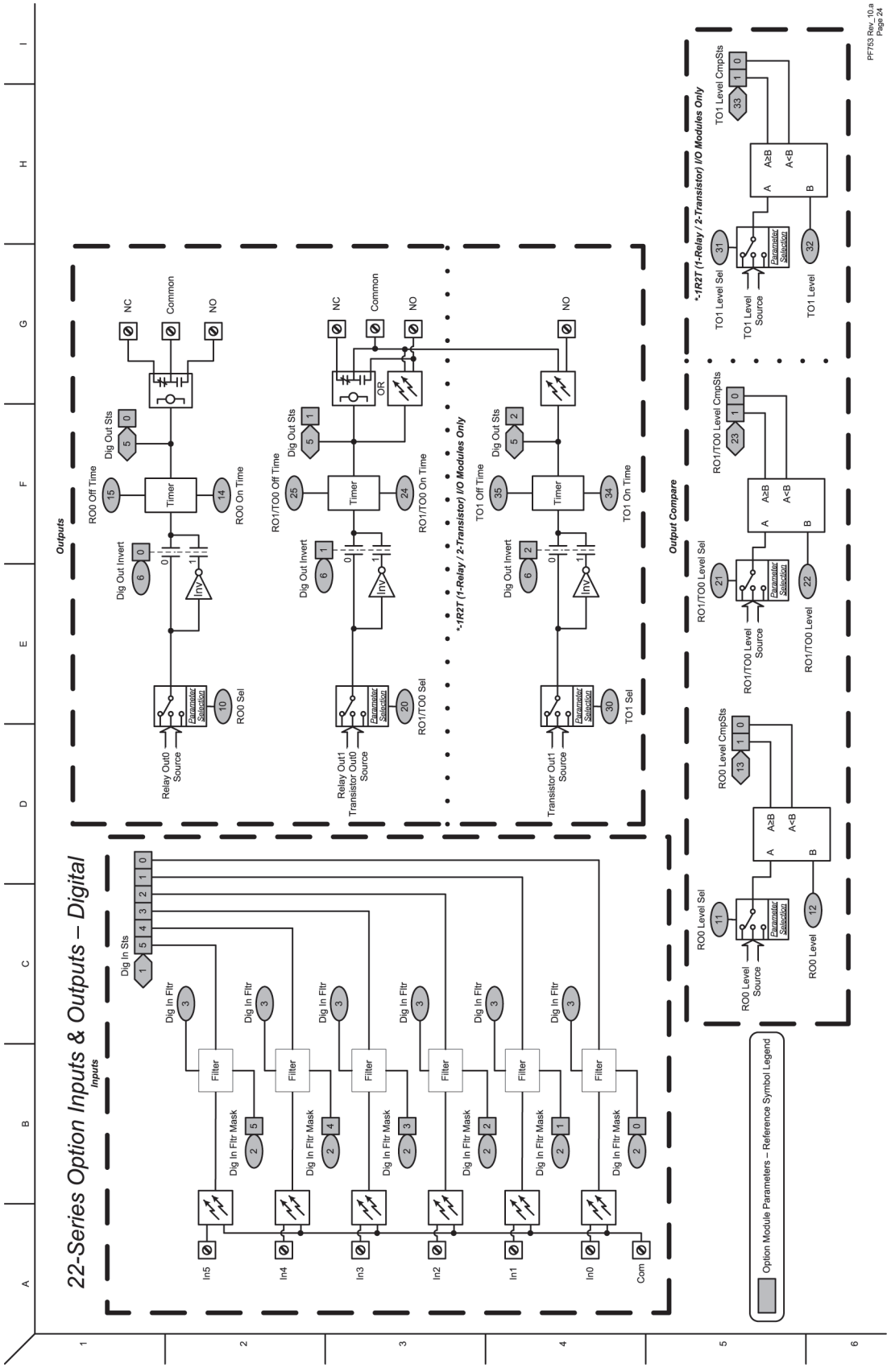

Figure 31 - 22-Series Option Inputs & Outputs - Analog

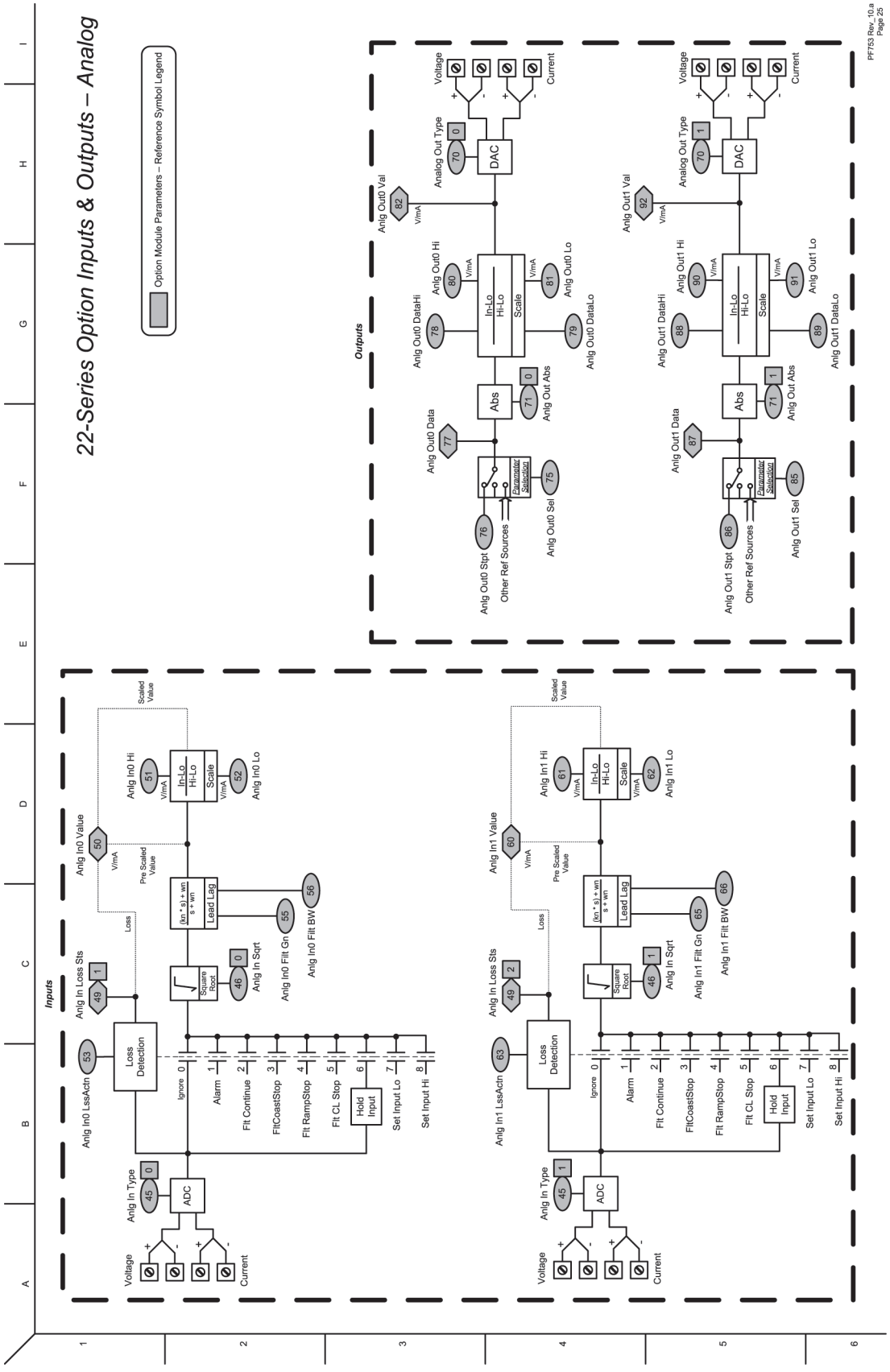

Figure 32 - 11-Series Inputs & Outputs - Digital

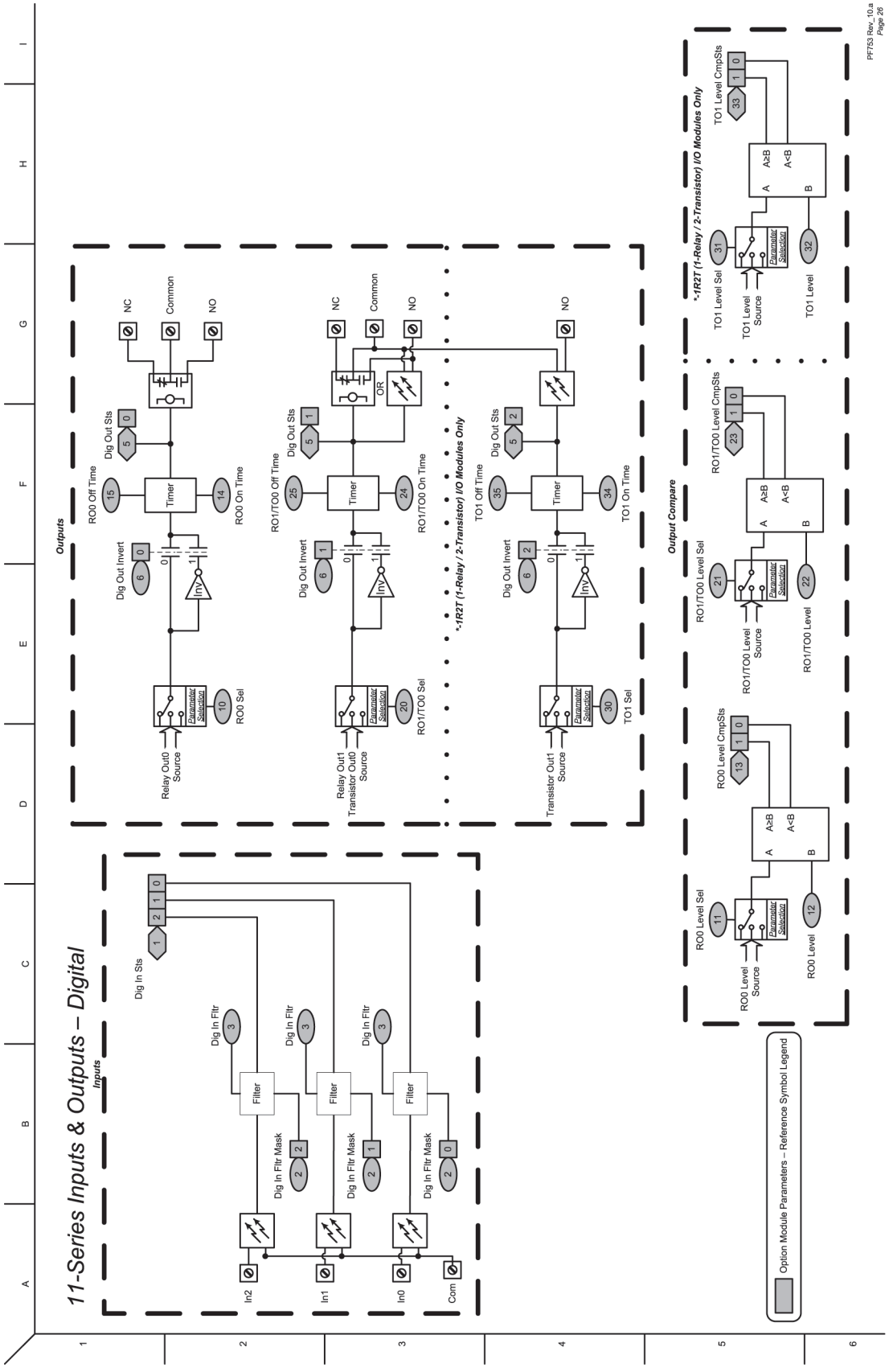

Figure 33 - 11-Series Inputs & Outputs - Analog

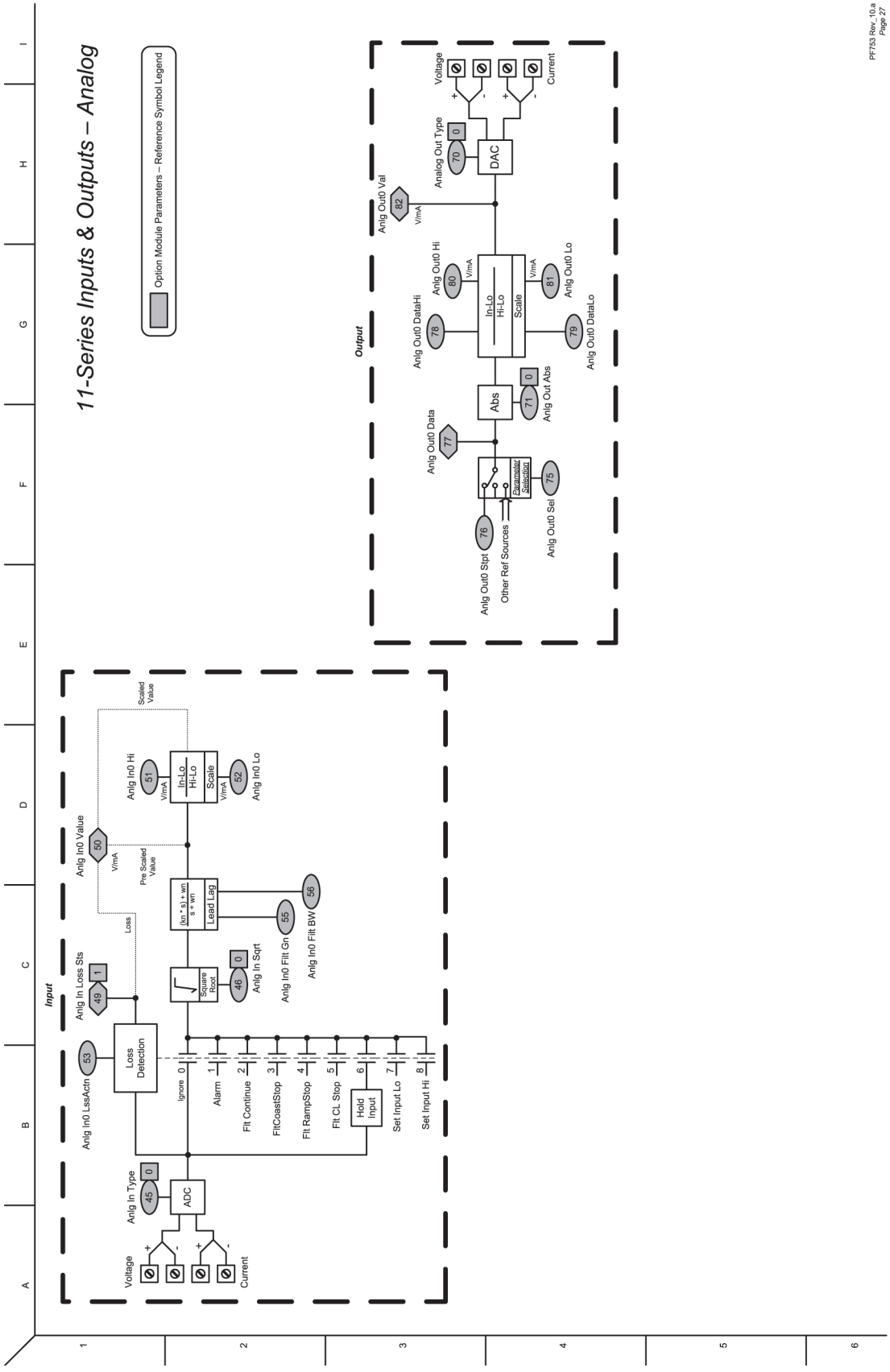

Figure 34 - 11-Series Inputs & Outputs - ATEX

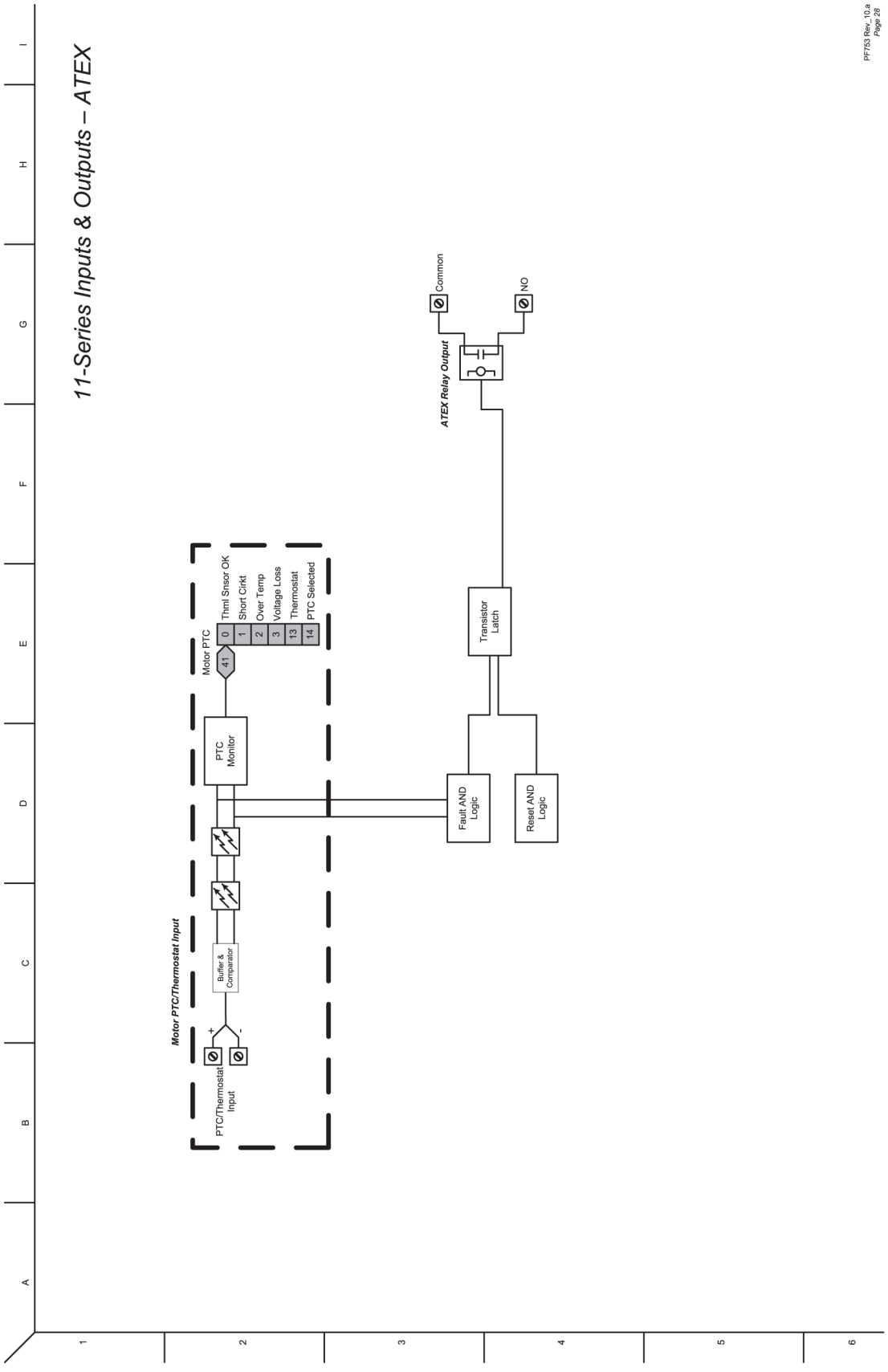

Figure 35 - Control Logic

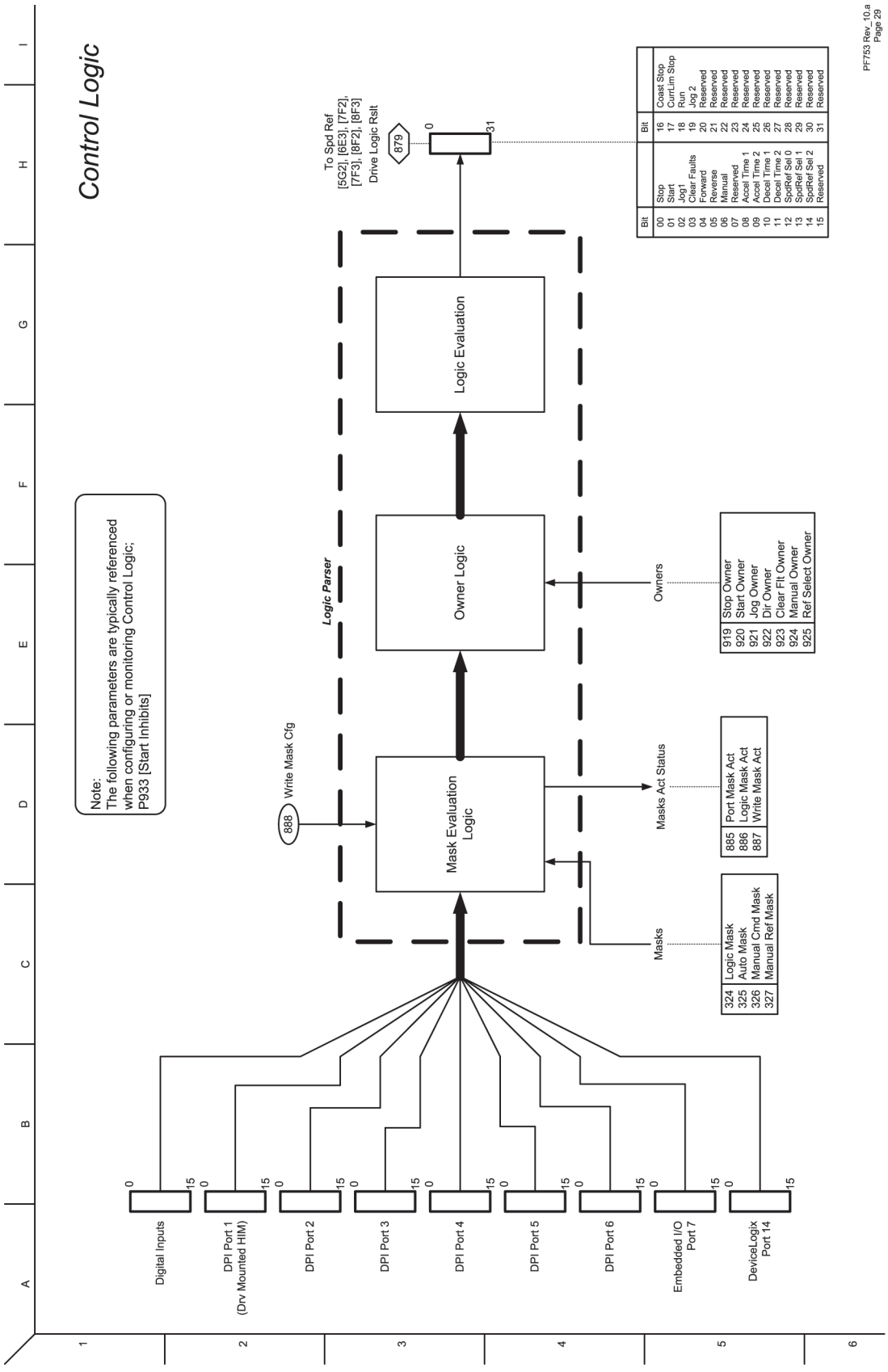

Figure 36 - Inverter Overload IT

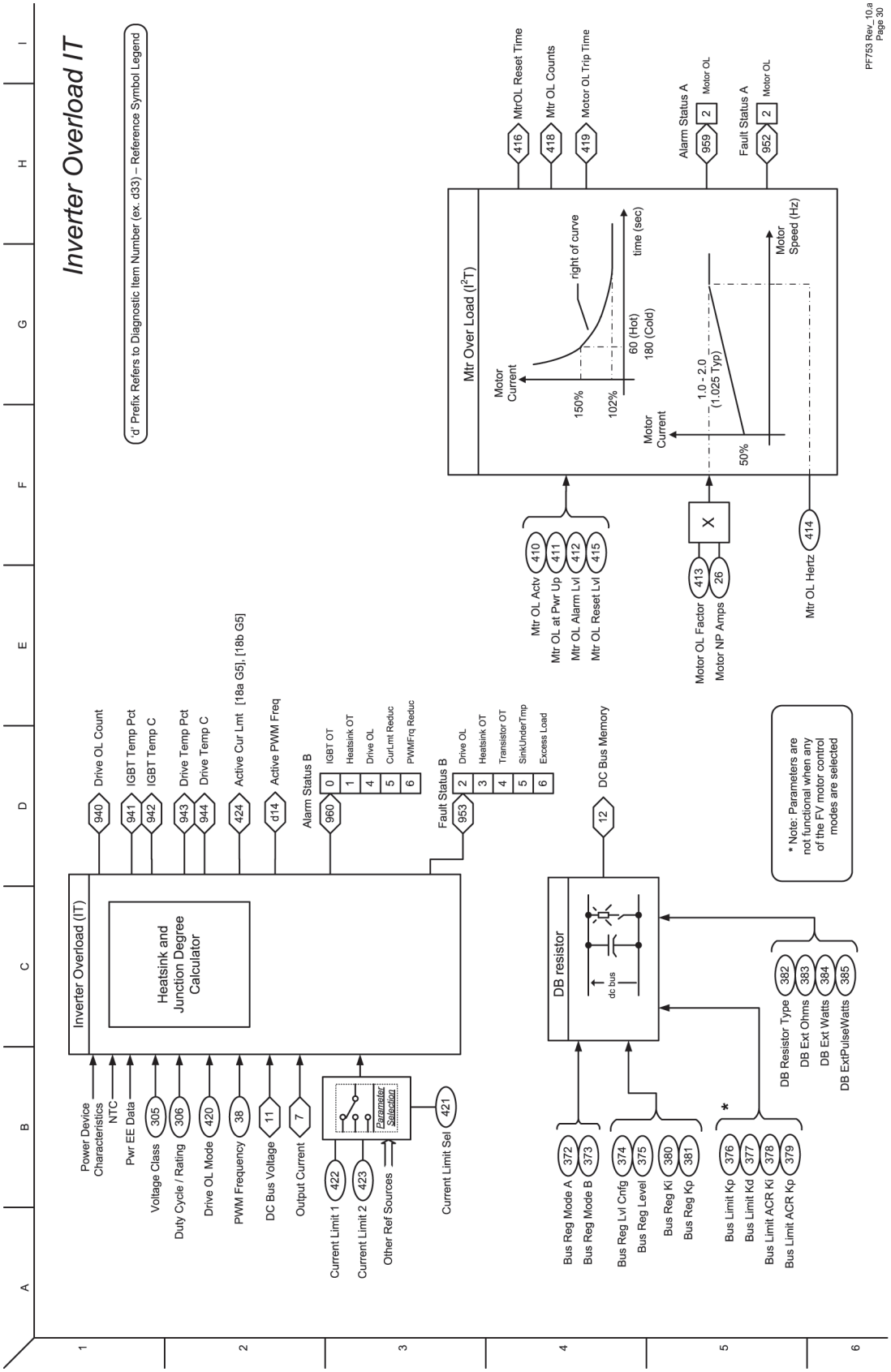

Figure 37 - Variable Boost Voltage Overview

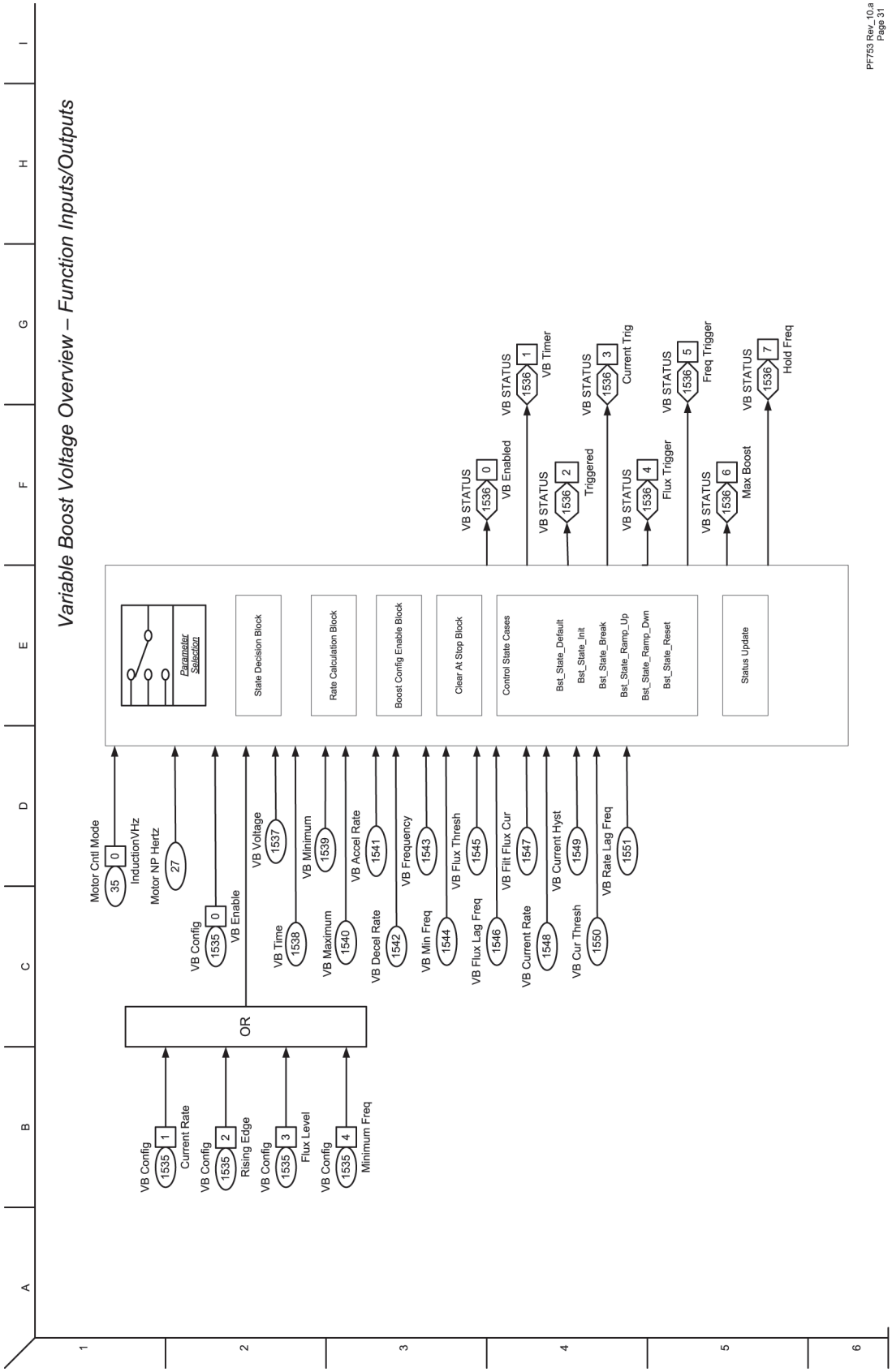

Notes:

PowerFlex 755 Control Block Diagrams

The block diagrams in this appendix are applicable to firmware revision 11.002 and earlier only.

Flow diagrams on the following pages illustrate the PowerFlex® 755 drive control algorithms.

Diagram	Page
Flux Vector Overview	413
VF, SV Overview	414
Speed/Position Feedback	415
Speed Control - Reference Overview	416
Speed Control - Reference (1)	417
Speed Control - Reference (2)	418
Speed Control - Reference (3)	419
Speed Control - Reference (4)	420
Speed Control - Reference (5)	421
Speed Control - Regulator (FV)	422
Position Control - Reference	423
Position Control - Regulator	424
Position Control - Aux Functions	425
Position Control - Phase Locked Loop	426
Position Control - Position CAM	427
Position Control - Profiler/Indexer (1)	428
Position Control - Profiler/Indexer (2), Homing	429
Position Control / Auxiliary Functions - Roll Position Indicator	430
Position Control - Spindle Orientation	431
Position Control / Auxiliary Functions - Position Oriented Torque Boost	432
Torque Control - Overview (IM & SPM)	433
Torque Control - Overview (IPM)	434
Torque Control - Reference Scale & Trim	435
Torque Control - Torque	436
Torque Control - Current (IM & SPM)	437
Torque Control - Current (IPM)	438
Torque Control - Inertia Adaption	439
Torque Control - Load Observer / Estimator	440
Process Control (1)	441
Process Control (2)	442
MOP Control	443
22-Series Inputs & Outputs - Digital	444
22-Series Inputs & Outputs - Analog	445
11-Series Inputs & Outputs - Digital	446
11-Series Inputs & Outputs - Analog	447

Diagram	Page
11-Series Inputs & Outputs - ATEX	448
Control Logic	449
Inverter Overload IT	450
Friction Compensation	451
Variable Boost Voltage Overview - Function Inputs/Outputs	452
Diagnostic Tools	453
High-Speed Trend Wizard	454

Diagram Conventions and Definitions

Definitions of the Per Unit system:
1.0 PU Position = Distance traveled / 1sec at Base Spd
1.0 PU Speed = Base Speed of the Motor
1.0 PU Torque = Base Torque of the Motor

Symbol Legend:

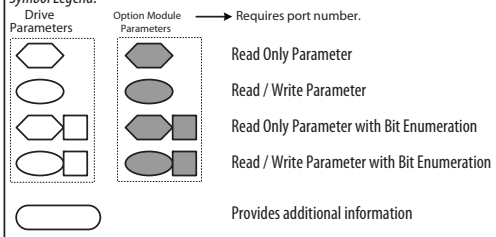

( ) = Enumerated Parameter
[ ] = Page and Coordinate
ex. 3A2 = pg 3, Column A, Row 2
= Constant value

'd' = Prefix refers to Diagnostic Item Number
ex. d33 = Diagnostic Item 33

*** Notes,** ***Important*** :

(1) These diagrams are for reference only and may not accurately reflect all logical control signals; actual functionality is implied by the approximated diagrams. Accuracy of these diagrams is not guaranteed.

Figure 38 - Flux Vector Overview

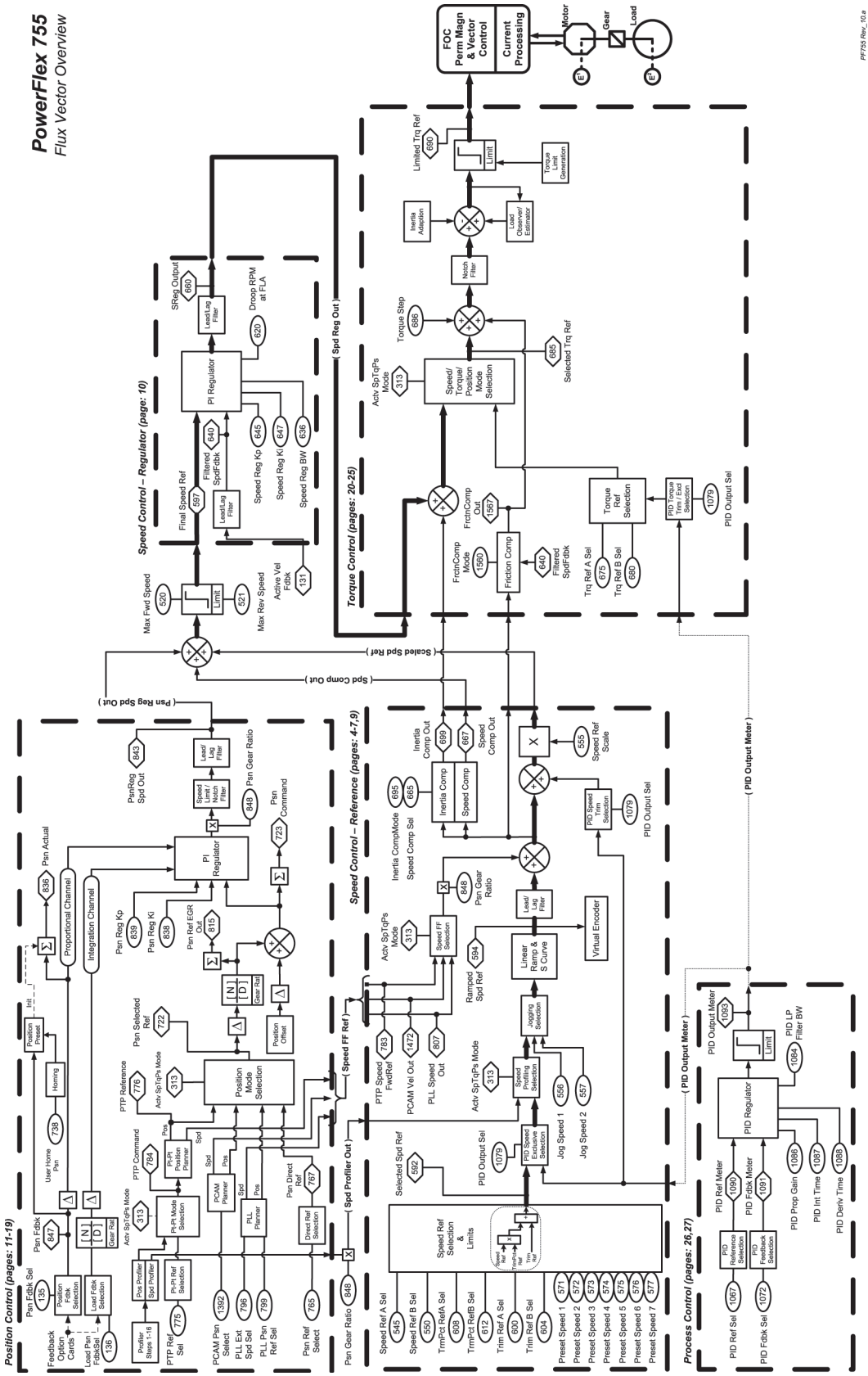

Figure 39 - VF, SV Overview

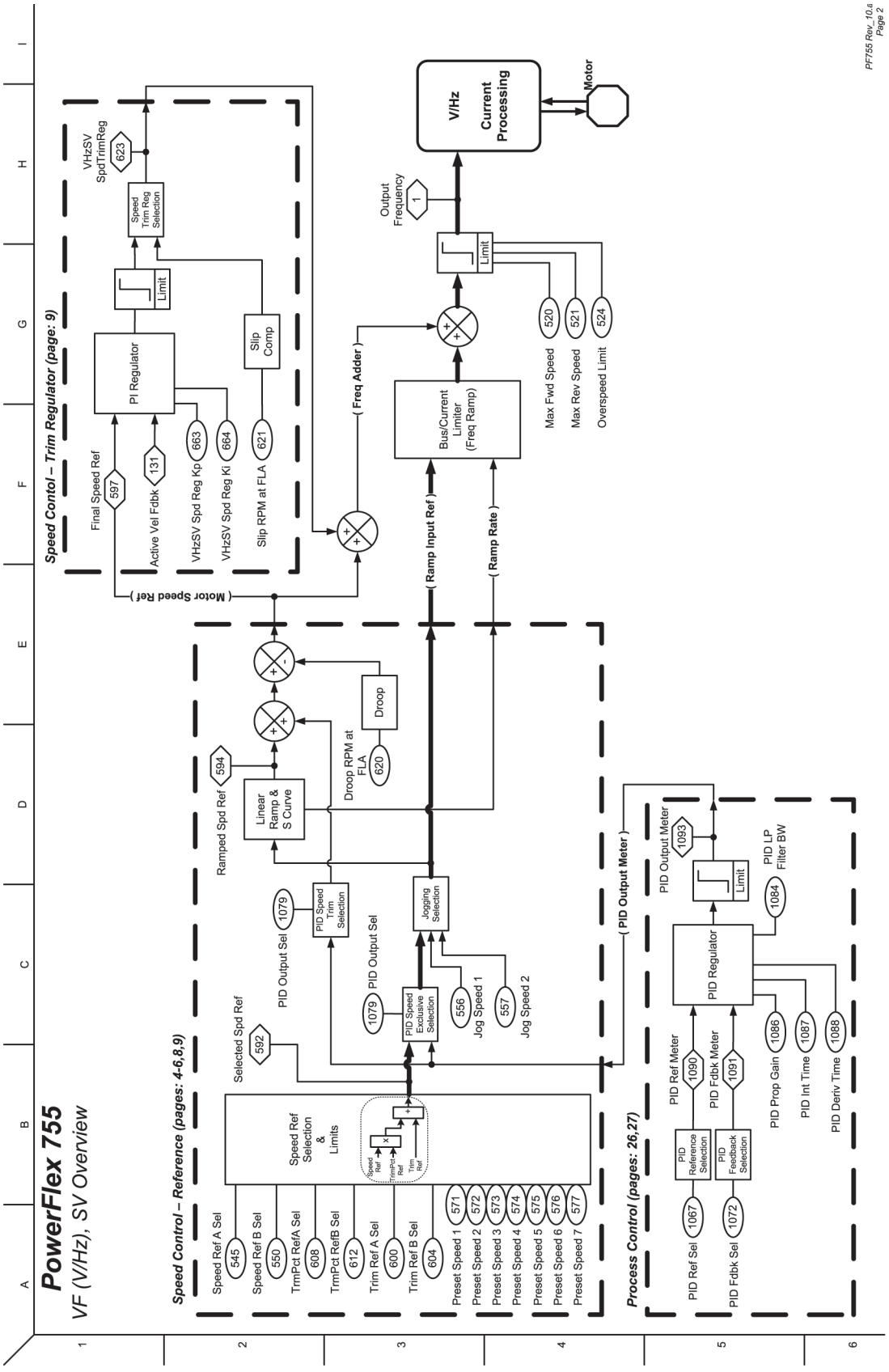

Figure 40 - Speed/Position Feedback

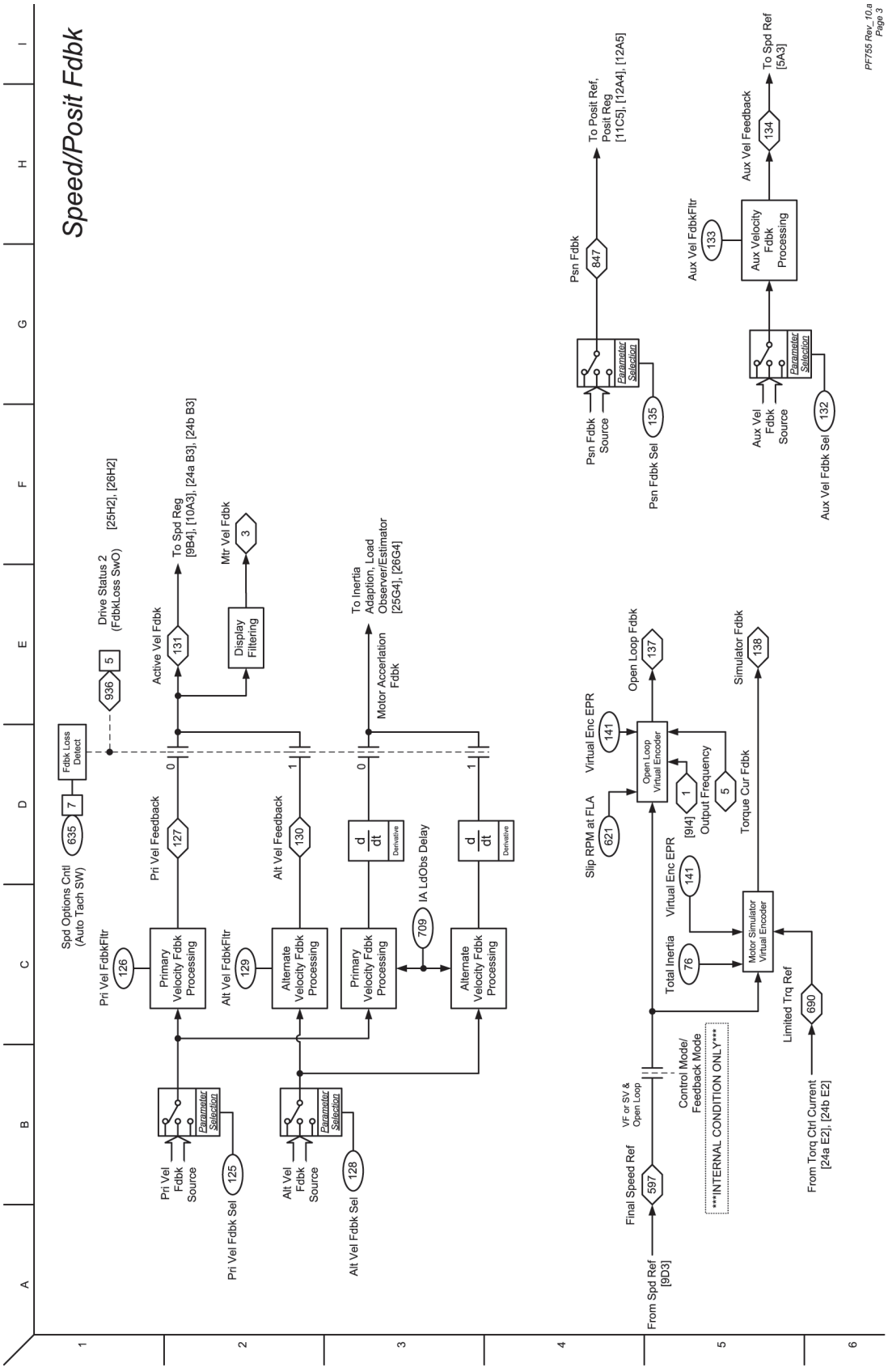

Figure 41 - Speed Control - Reference Overview

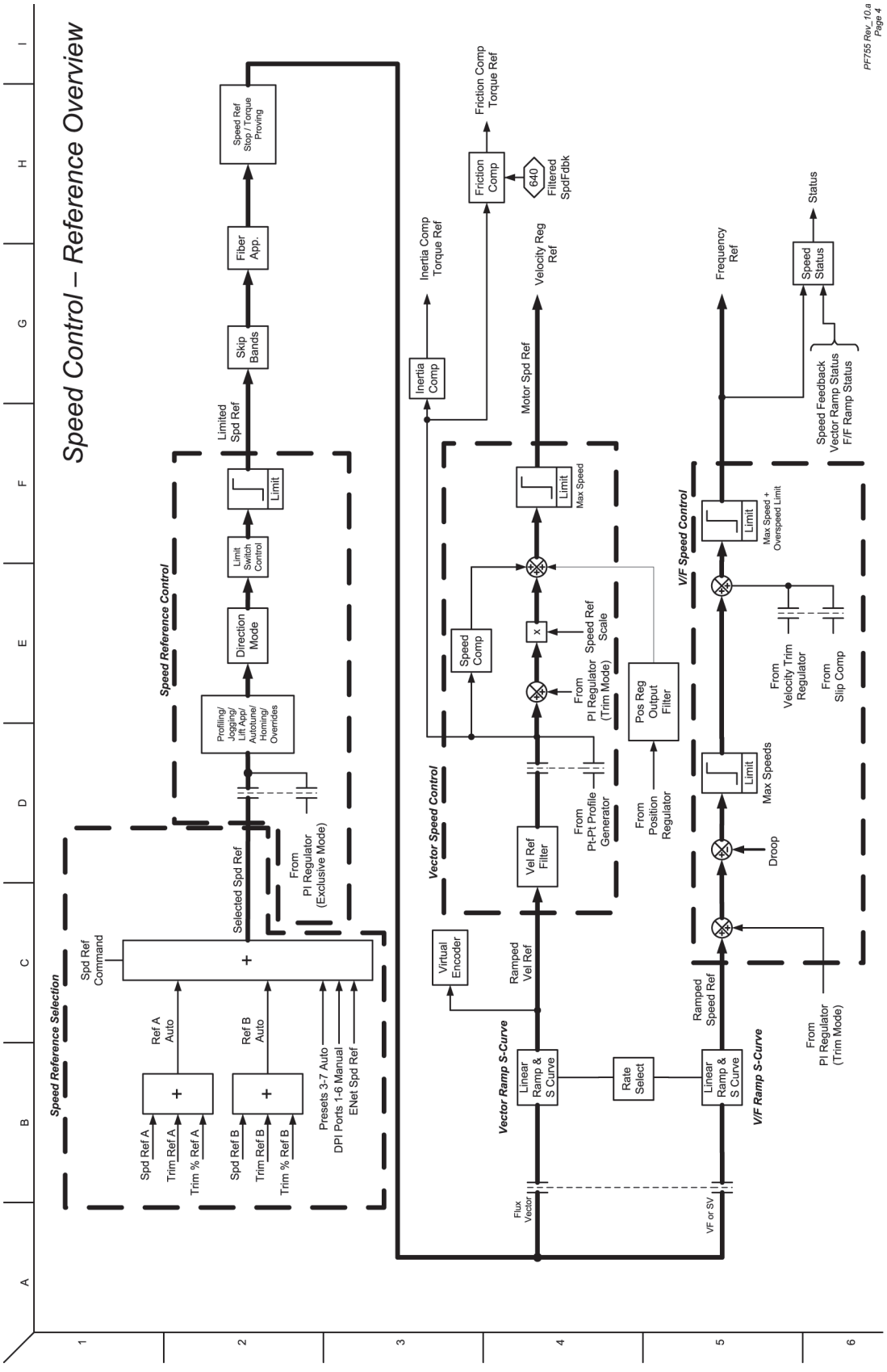

Figure 42 - Speed Control - Reference (1)

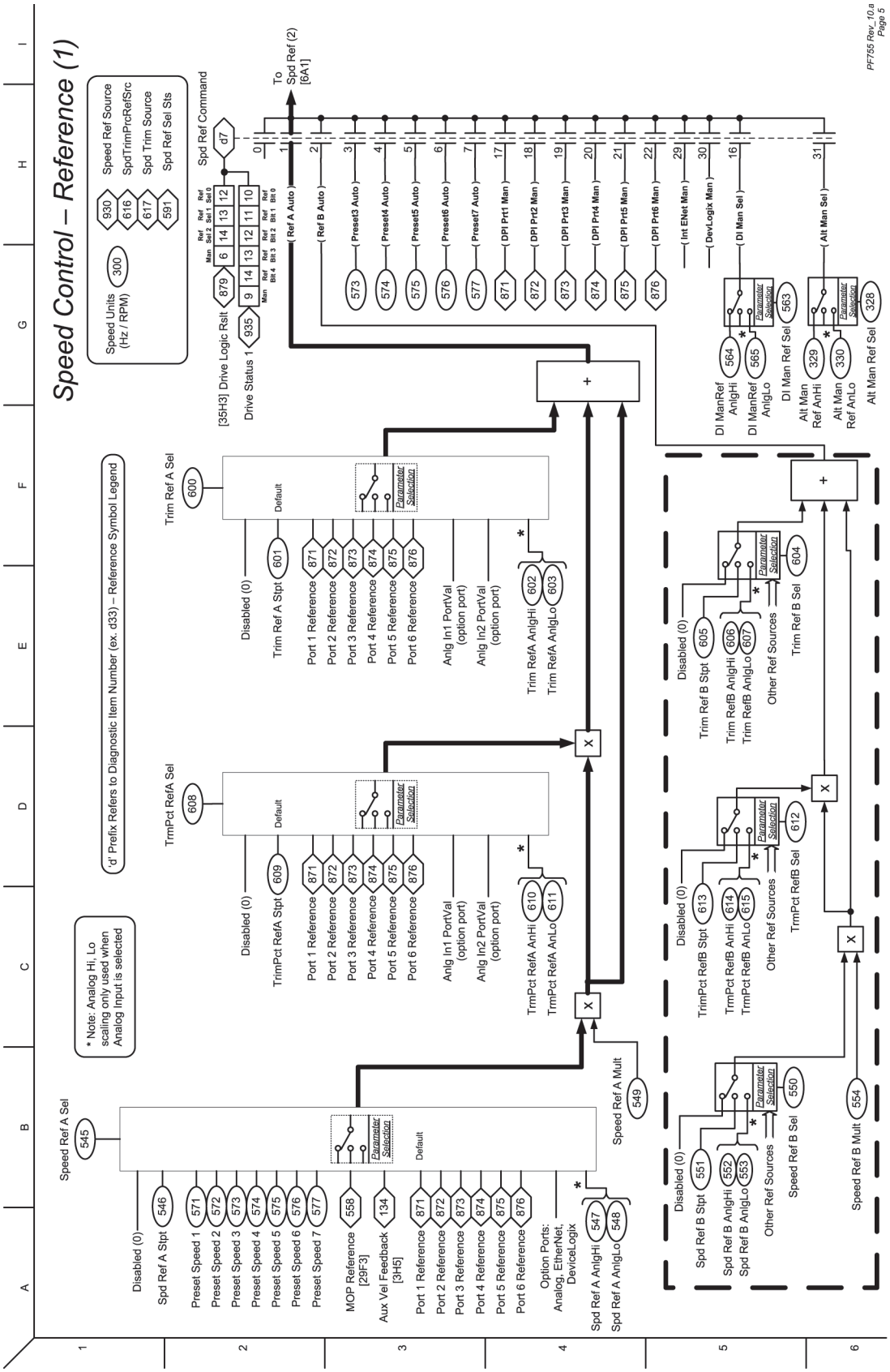

Figure 43 - Speed Control - Reference (2)

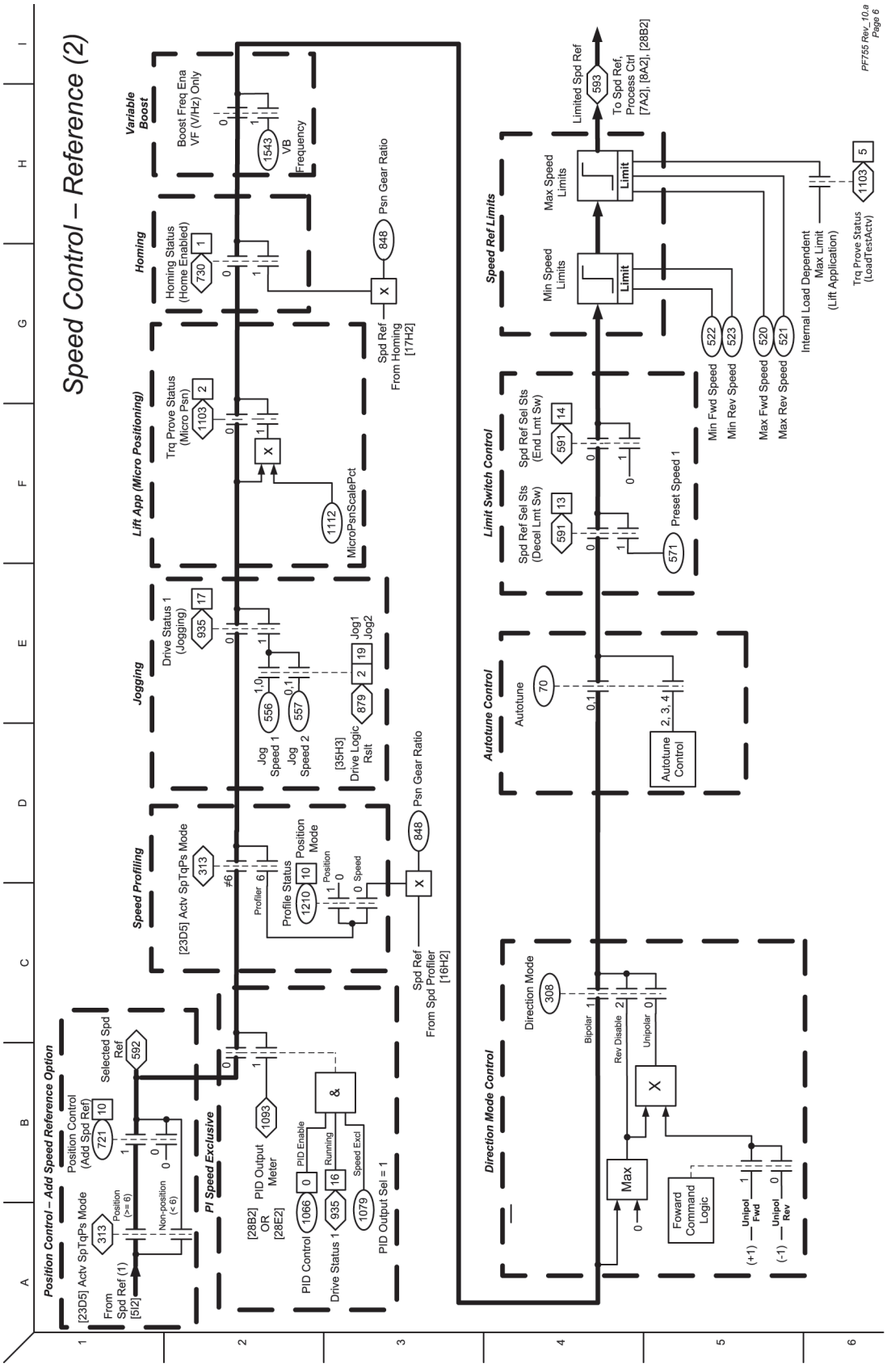

Figure 44 - Speed Control - Reference (3)

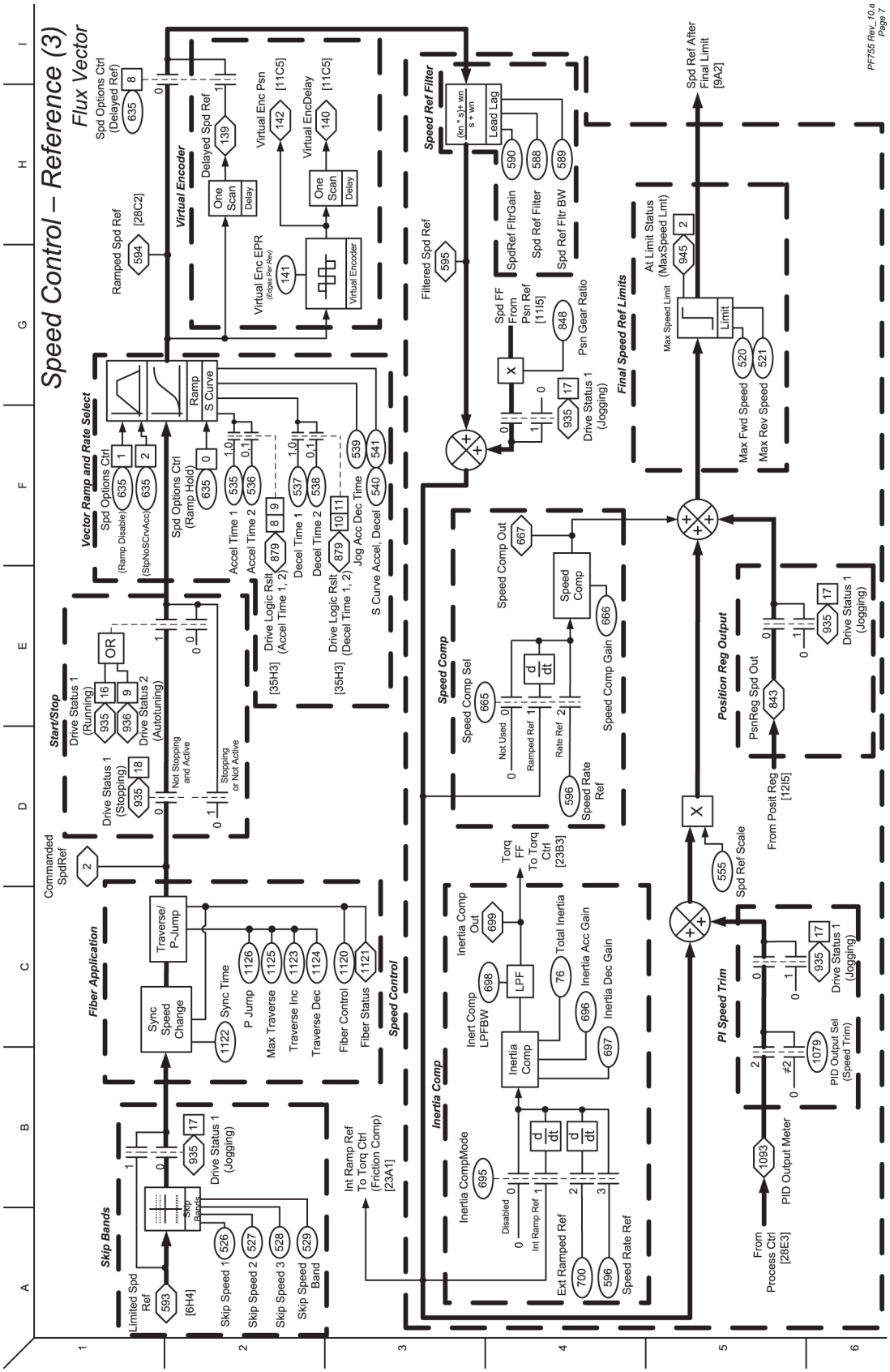

Figure 45 - Speed Control - Reference (4)

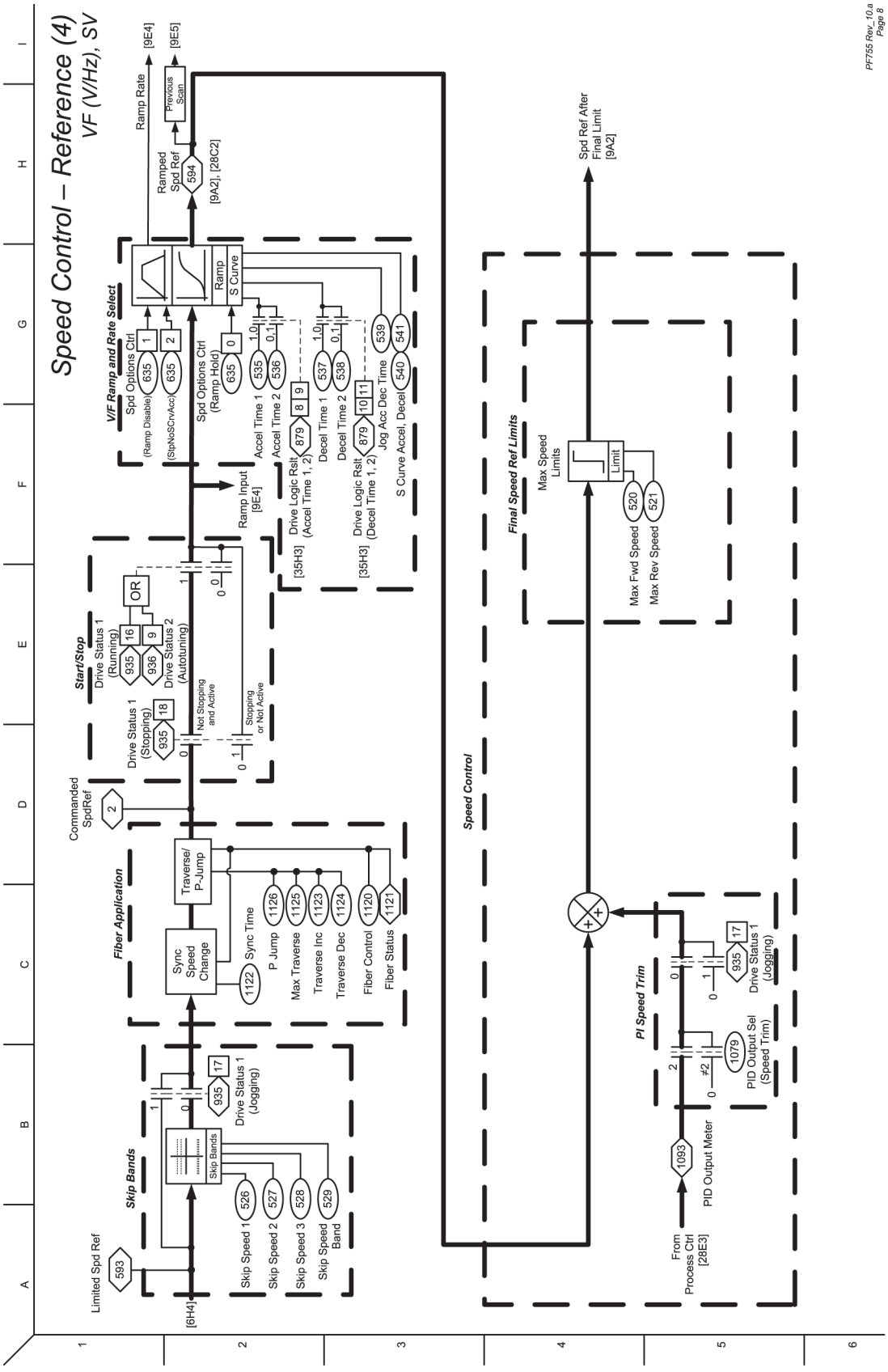

Figure 46 - Speed Control - Reference (5)

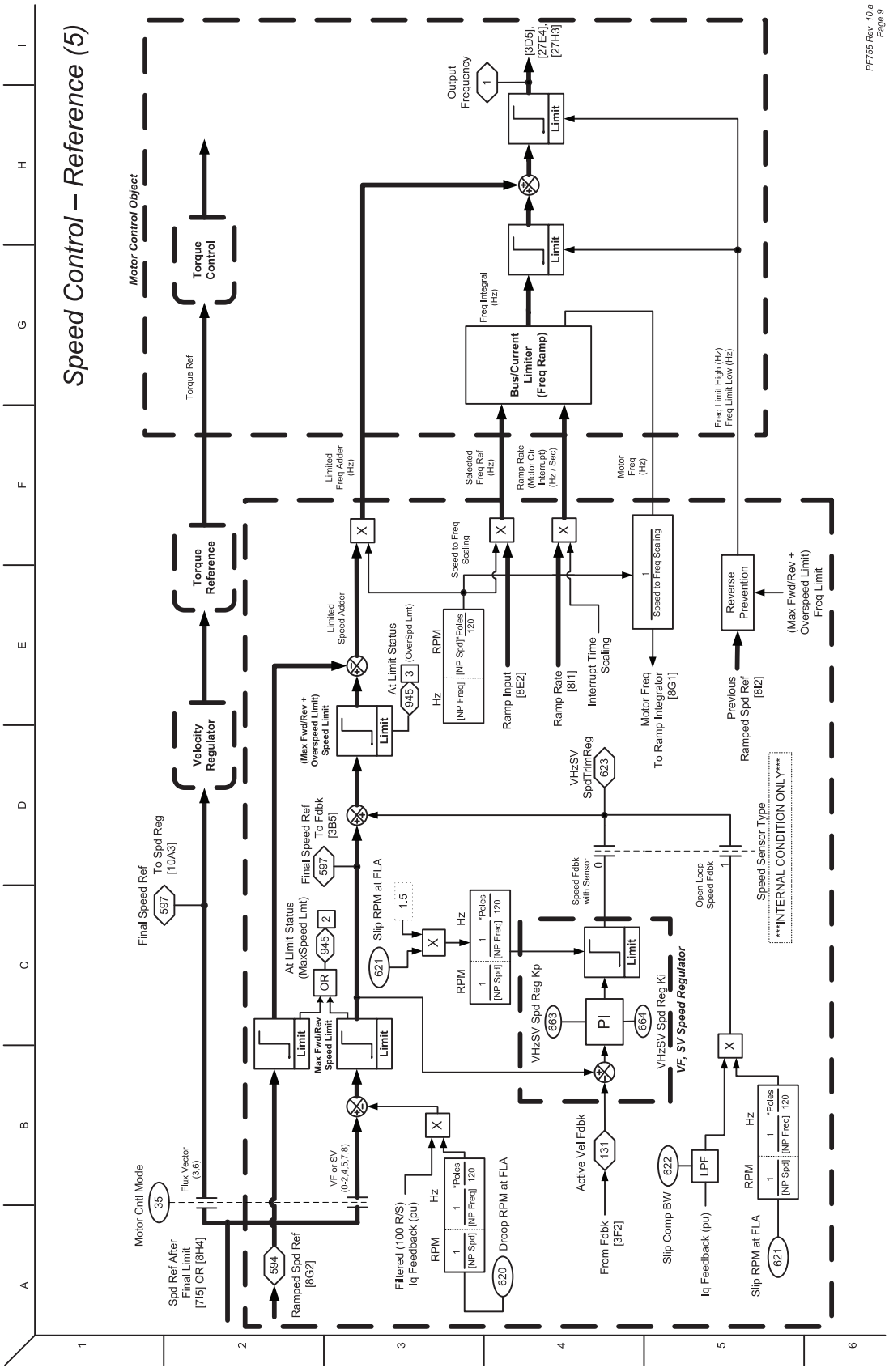

Figure 47 - Speed Control - Regulator (FV)

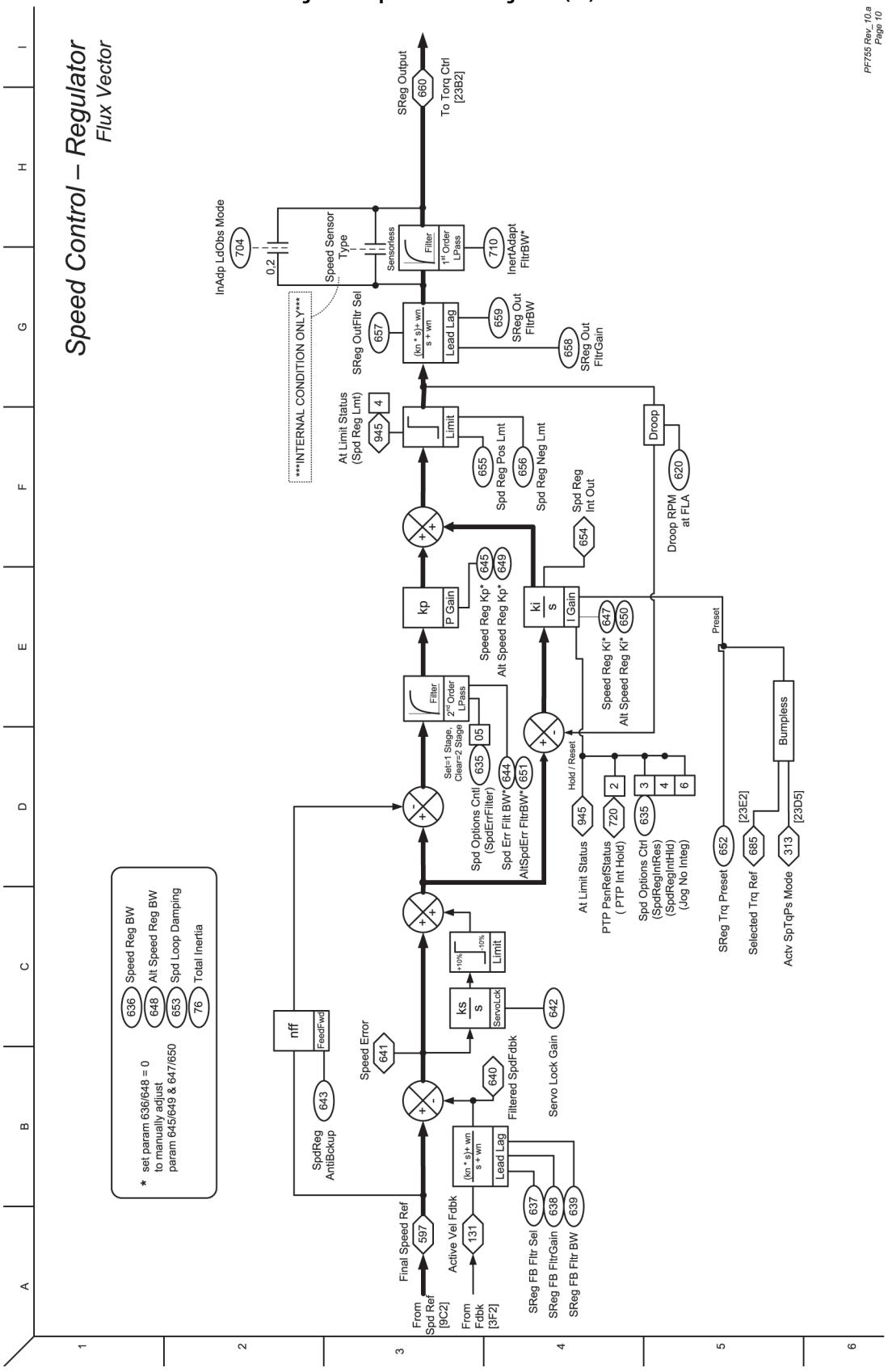

Figure 48 - Position Control - Reference

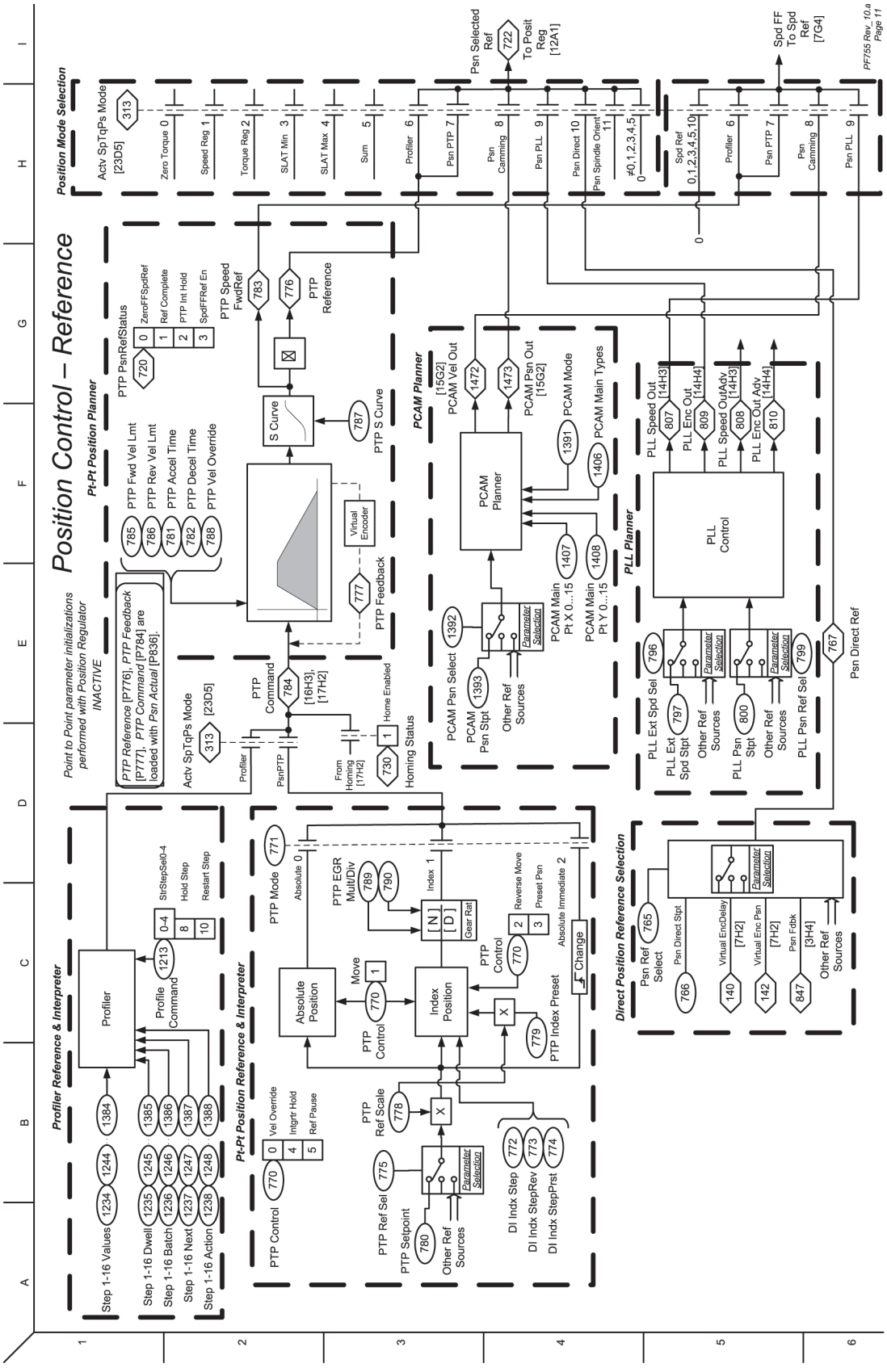

Figure 49 - Position Control - Regulator

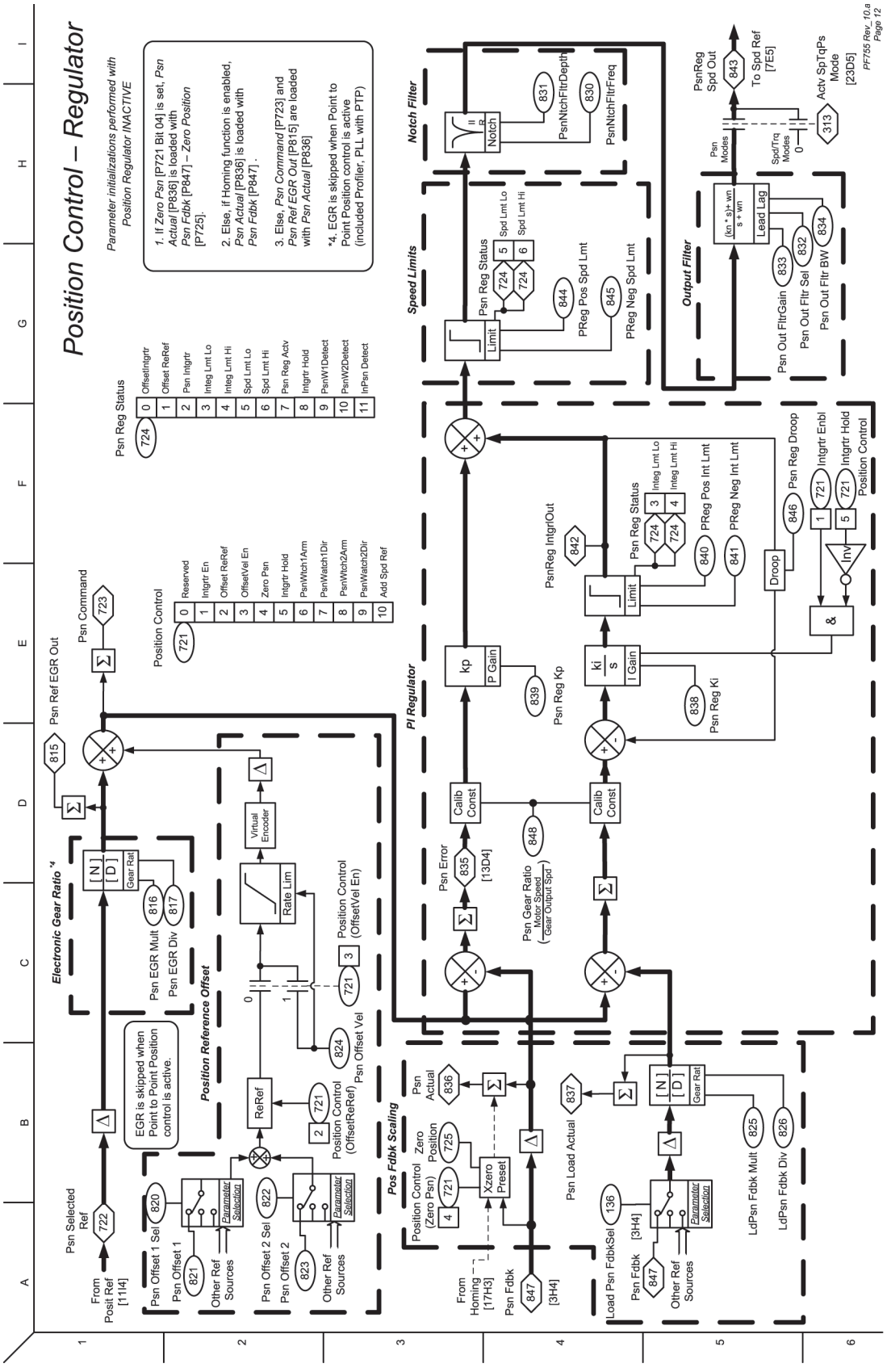

Figure 50 - Position Control - Aux Functions

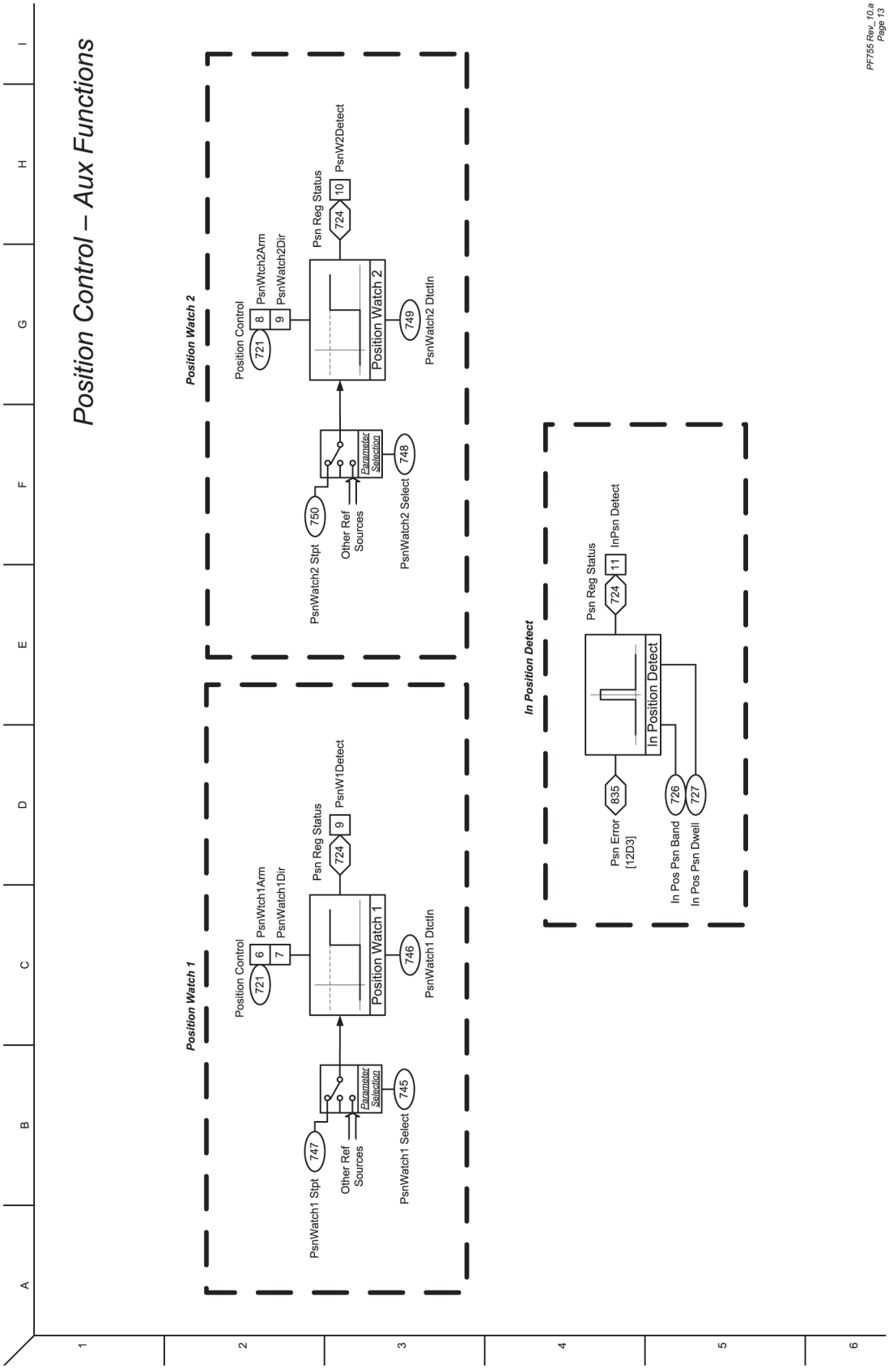

Figure 51 - Position Control - Phase Locked Loop

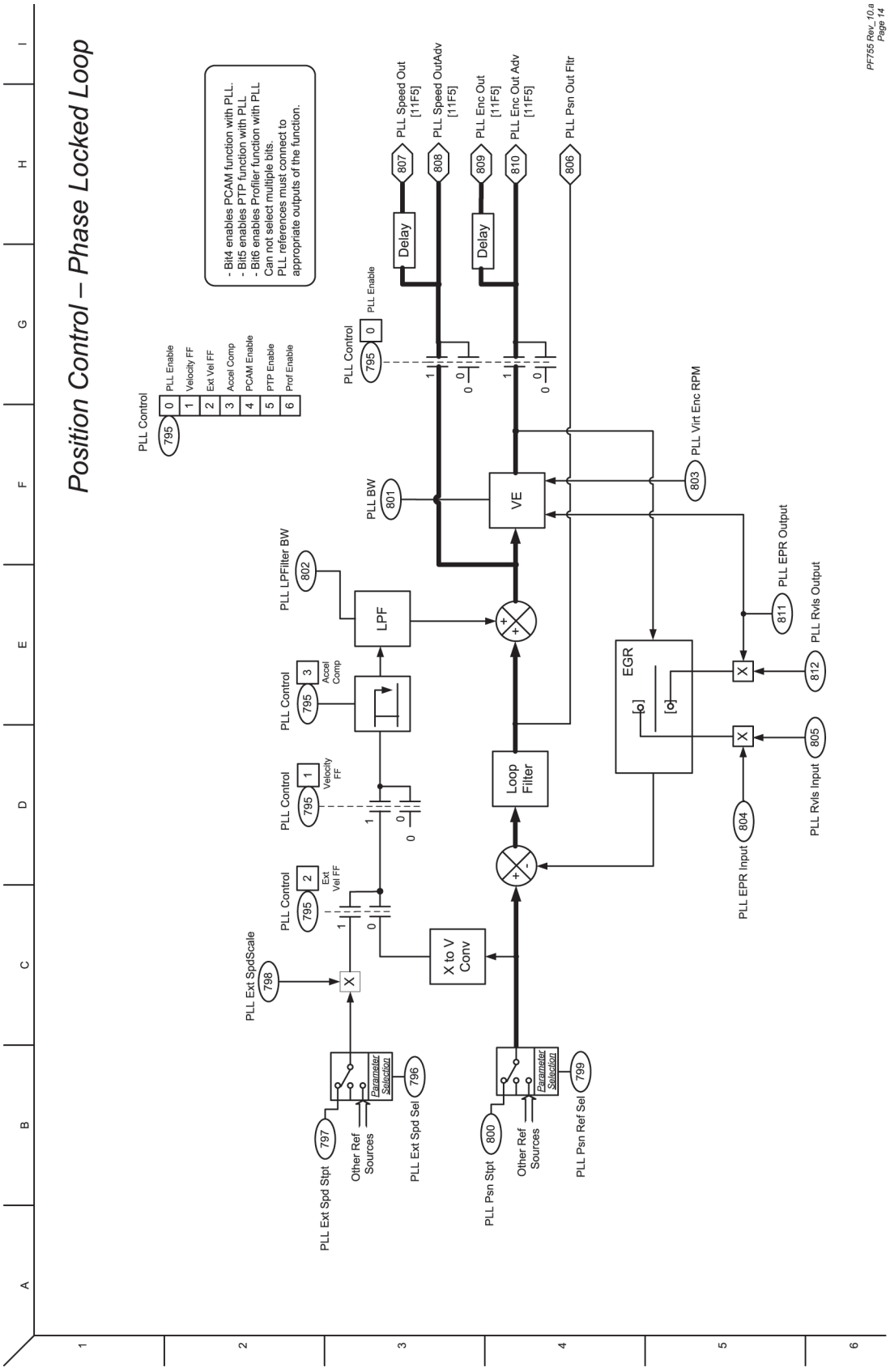

Figure 52 - Position Control - Position CAM

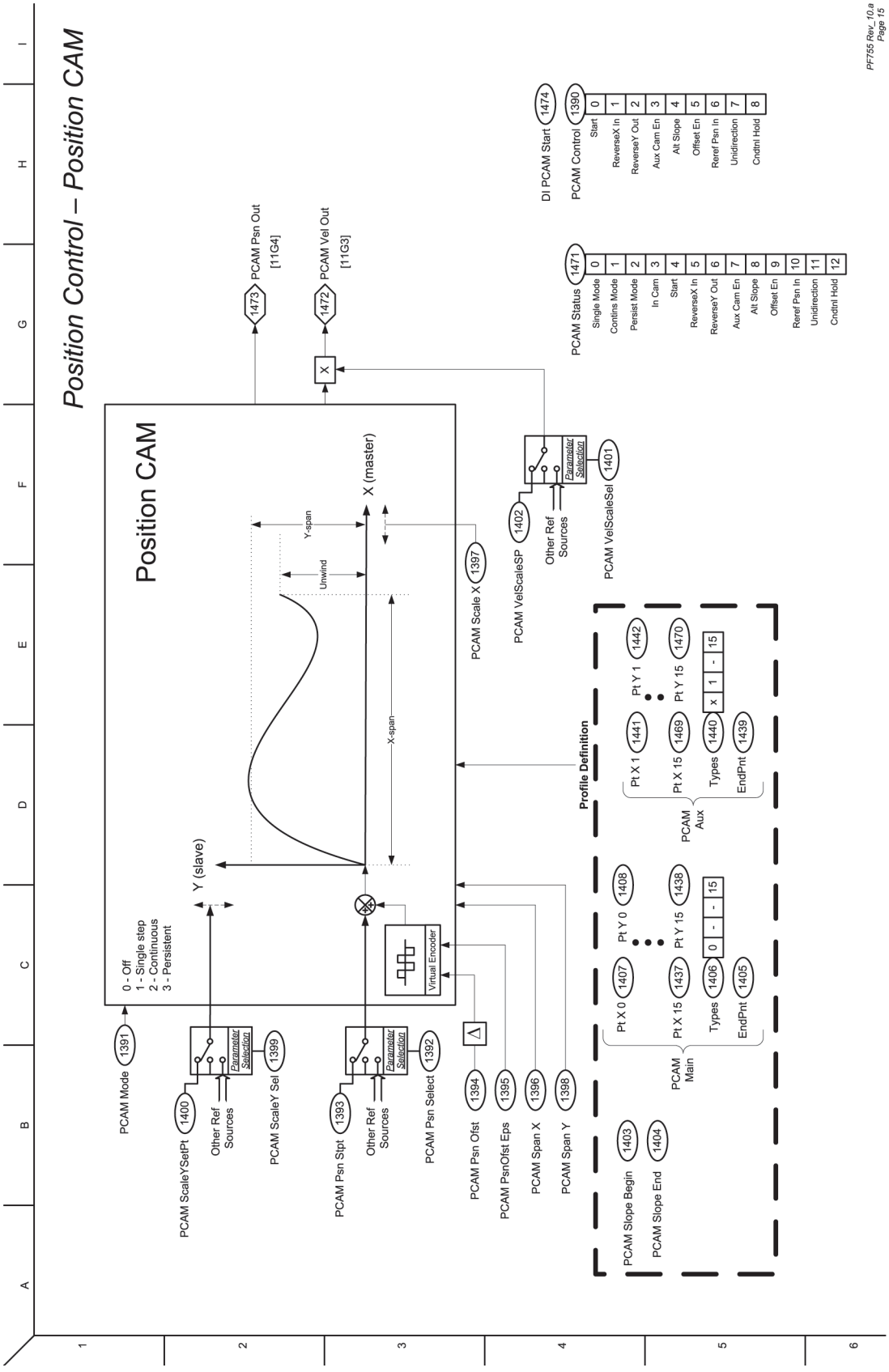

Figure 53 - Position Control - Profiler/Indexer (1)

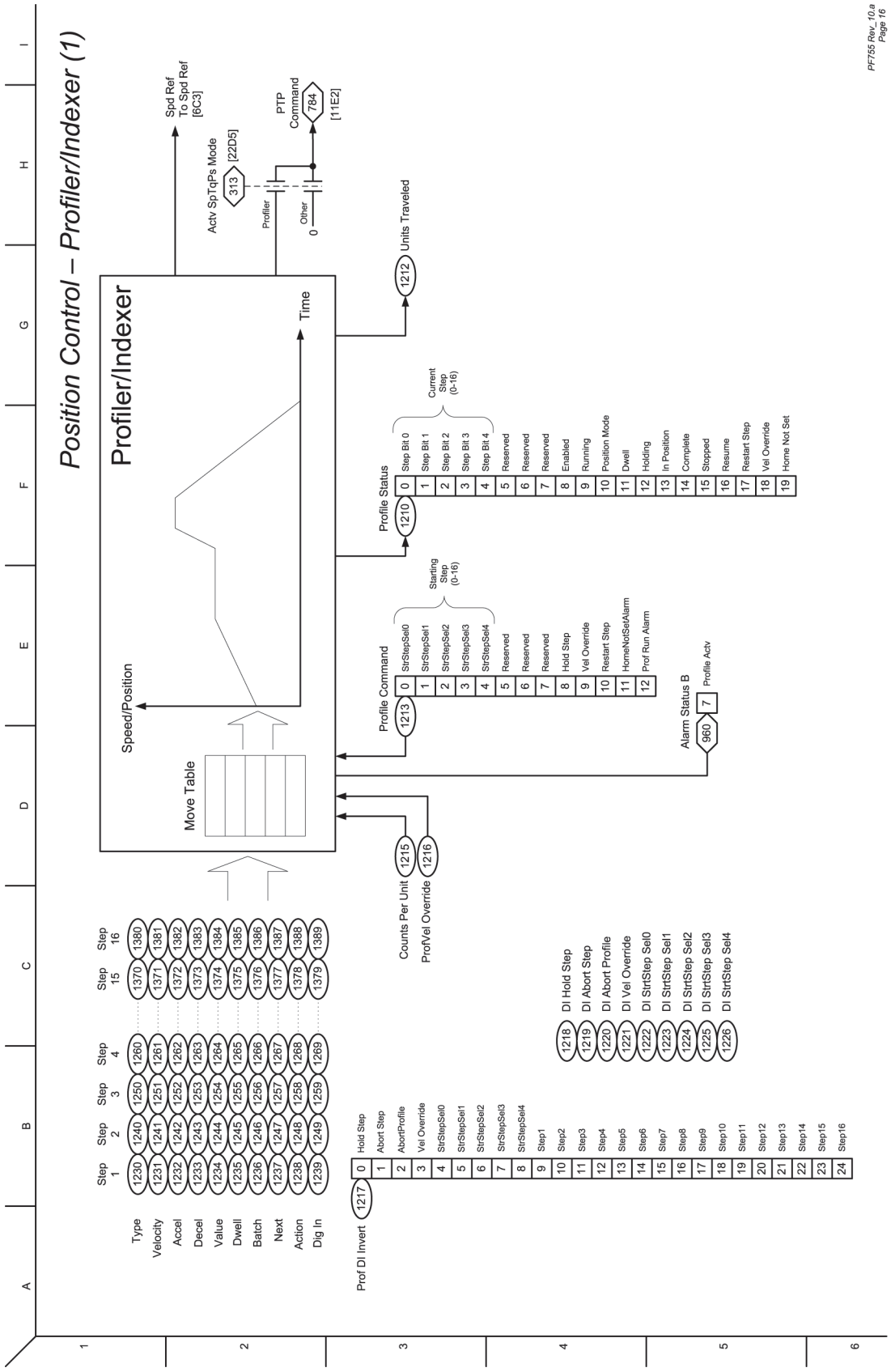

Figure 54 - Position Control - Profiler/Indexer (2), Homing

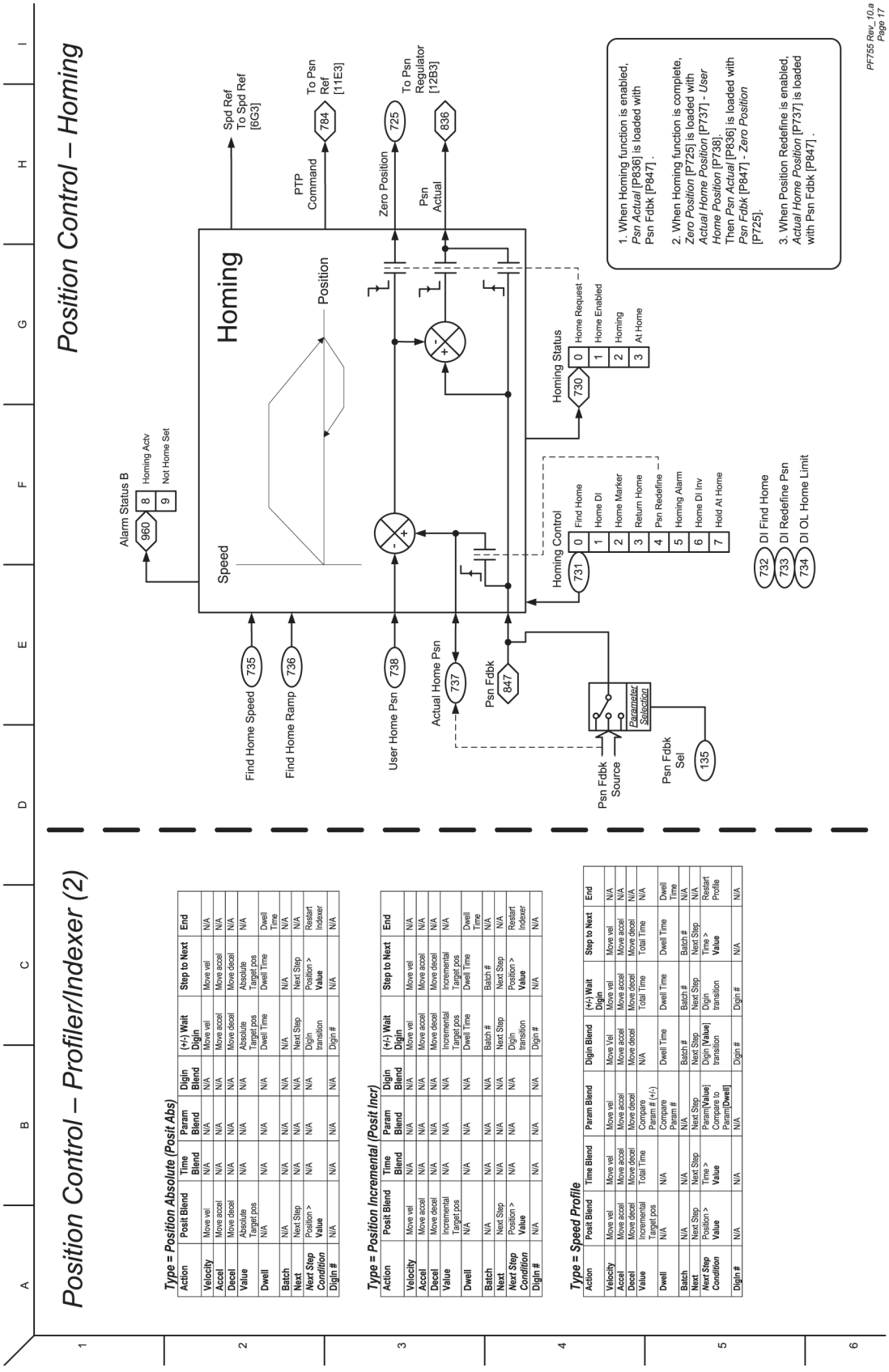

Action	Posit Blend	Time Blend	Param Blend	Digin Blend	(+/-) Wait Digin	Step to Next	End
Velocity	Move vel	N/A	N/A	N/A	Move vel	Move vel	N/A
Accel	Move accel	N/A	N/A	N/A	Move accel	Move accel	N/A
Decel	Move decel	N/A	N/A	N/A	Move decel	Move decel	N/A
Value	Absolute Target pos	N/A	N/A	N/A	Absolute Target pos	Absolute Target pos	N/A
Dwell	N/A	N/A	N/A	N/A	Dwell Time	Dwell Time	Dwell Time
Batch	N/A	N/A	N/A	N/A	N/A	N/A	N/A
Next	Next Step	N/A	N/A	N/A	Next Step	Next Step	N/A
Next Step Condition	Position > Value	N/A	N/A	N/A	Digin transition	Position > Value	Restart Indexer
Digin #	N/A	N/A	N/A	N/A	Digin #	N/A	N/A

Action	Posit Blend	Time Blend	Param Blend	Digin Blend	(+/-) Wait Digin	Step to Next	End
Velocity	Move vel	N/A	N/A	N/A	Move vel	Move vel	N/A
Accel	Move accel	N/A	N/A	N/A	Move accel	Move accel	N/A
Decel	Move decel	N/A	N/A	N/A	Move decel	Move decel	N/A
Value	Incremental Target pos	N/A	N/A	N/A	Incremental Target pos	Incremental Target pos	N/A
Dwell	N/A	N/A	N/A	N/A	Dwell Time	Dwell Time	Dwell Time
Batch	N/A	N/A	N/A	N/A	Batch #	Batch #	N/A
Next	Next Step	N/A	N/A	N/A	Next Step	Next Step	N/A
Next Step Condition	Position > Value	N/A	N/A	N/A	Digin transition	Position > Value	Restart Indexer
Digin #	N/A	N/A	N/A	N/A	Digin #	N/A	N/A

Action	Posit Blend	Time Blend	Param Blend	Digin Blend	(+/-) Wait Digin	Step to Next	End
Velocity	Move vel	Move vel	Move vel	Move Vel	Move vel	Move vel	N/A
Accel	Move accel	Move accel	Move accel	Move accel	Move accel	Move accel	N/A
Decel	Move decel	Move decel	Move decel	Move decel	Move decel	Move decel	N/A
Value	Incremental Target pos	Total Time	Compare Param # (+/-)	N/A	Total Time	Total Time	N/A
Dwell	N/A	N/A	Compare Param #	Dwell Time	Dwell Time	Dwell Time	Dwell Time
Batch	N/A	N/A	N/A	Batch #	Batch #	Batch #	N/A
Next	Next Step	Next Step	Next Step	Next Step	Next Step	Next Step	N/A
Next Step Condition	Position > Value	Time > Value	Param[Value] Compare to Param[Dwell]	Digin [Value] transition	Digin transition	Time > Value	Restart Profile
Digin #	N/A	N/A	N/A	Digin #	Digin #	N/A	N/A

Figure 55 - Position Control / Auxiliary Functions - Roll Position Indicator

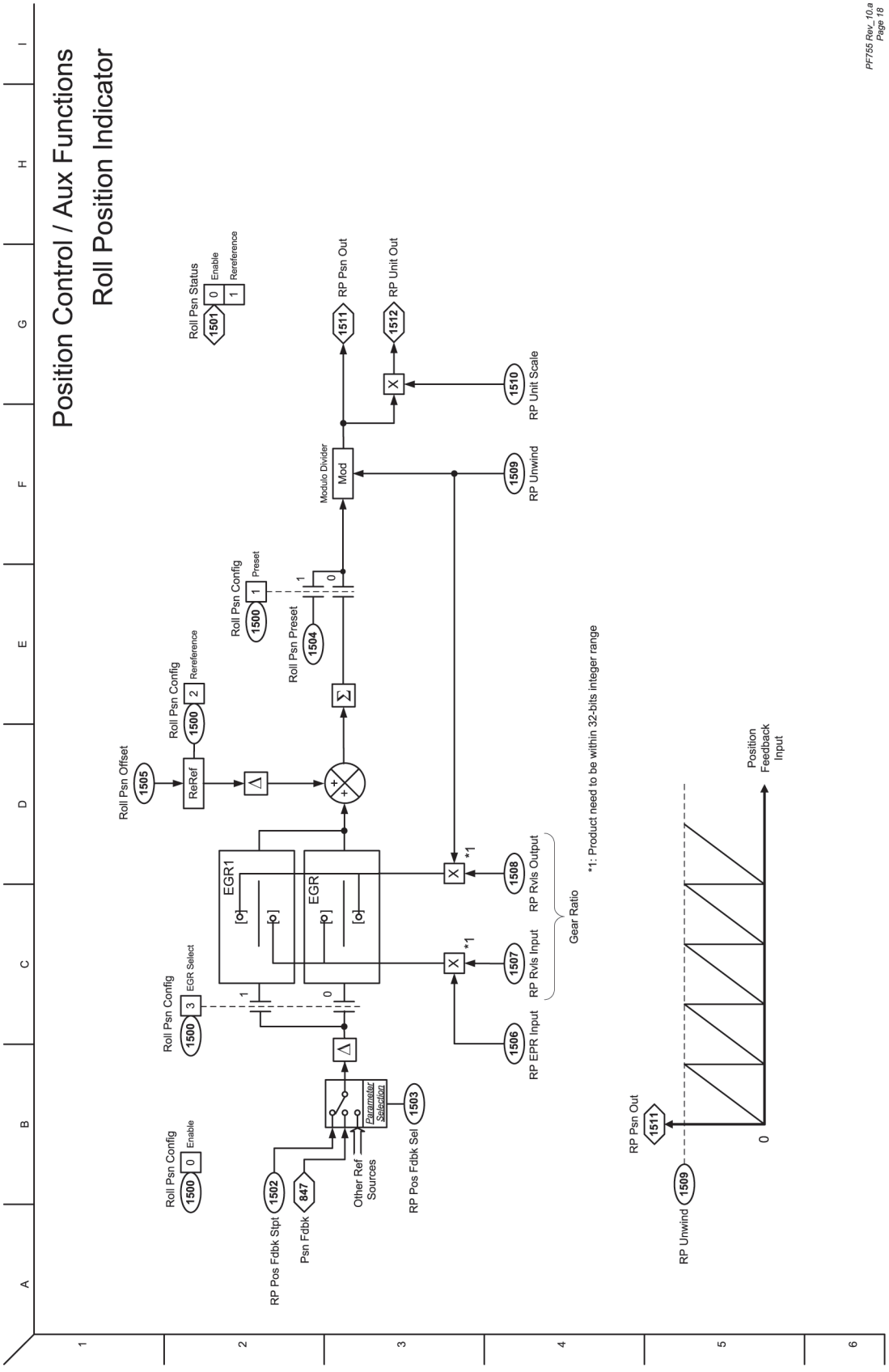

Figure 56 - Position Control - Spindle Orientation

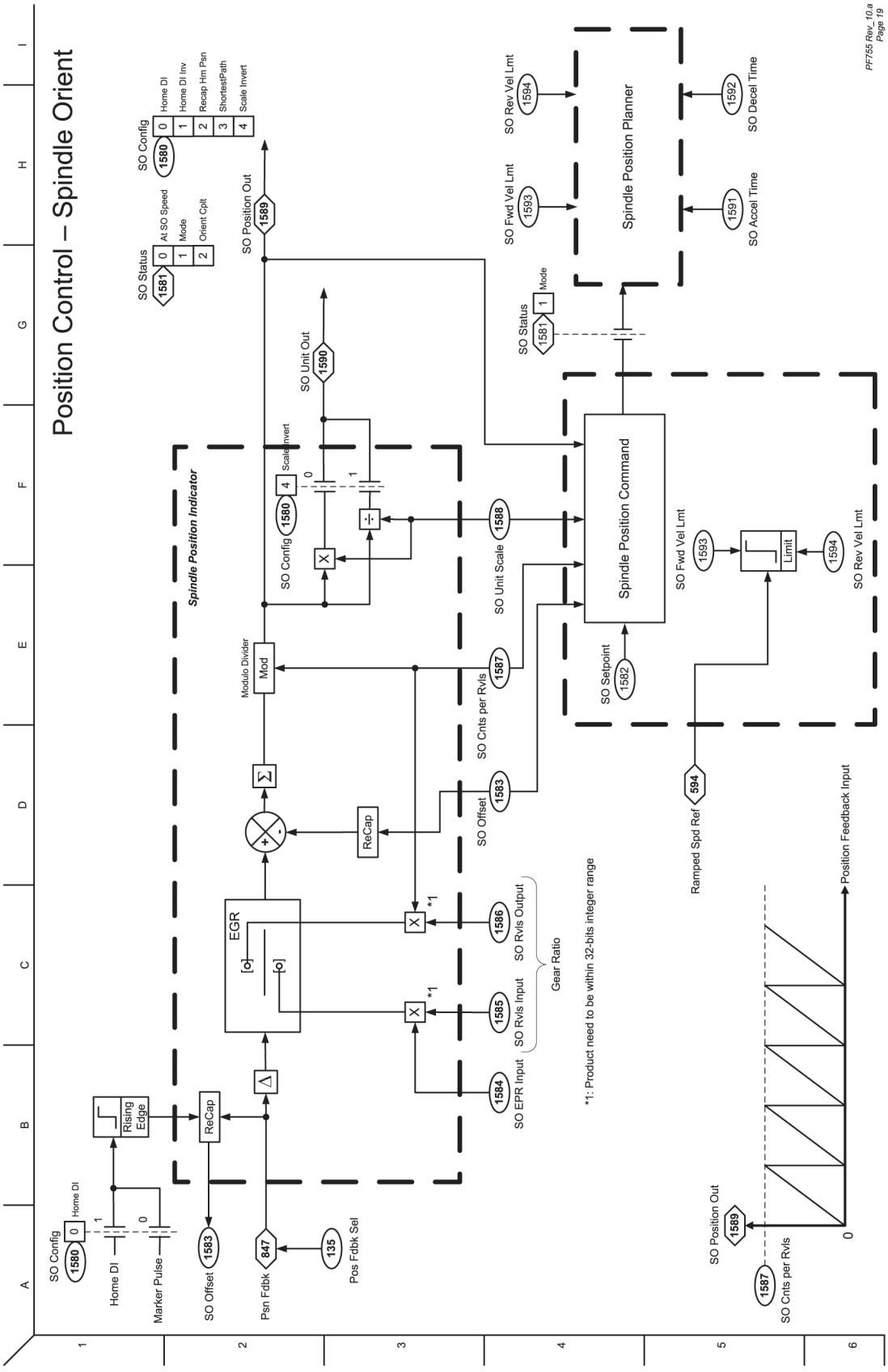

Figure 57 - Position Control / Auxiliary Functions - Position Oriented Torque Boost

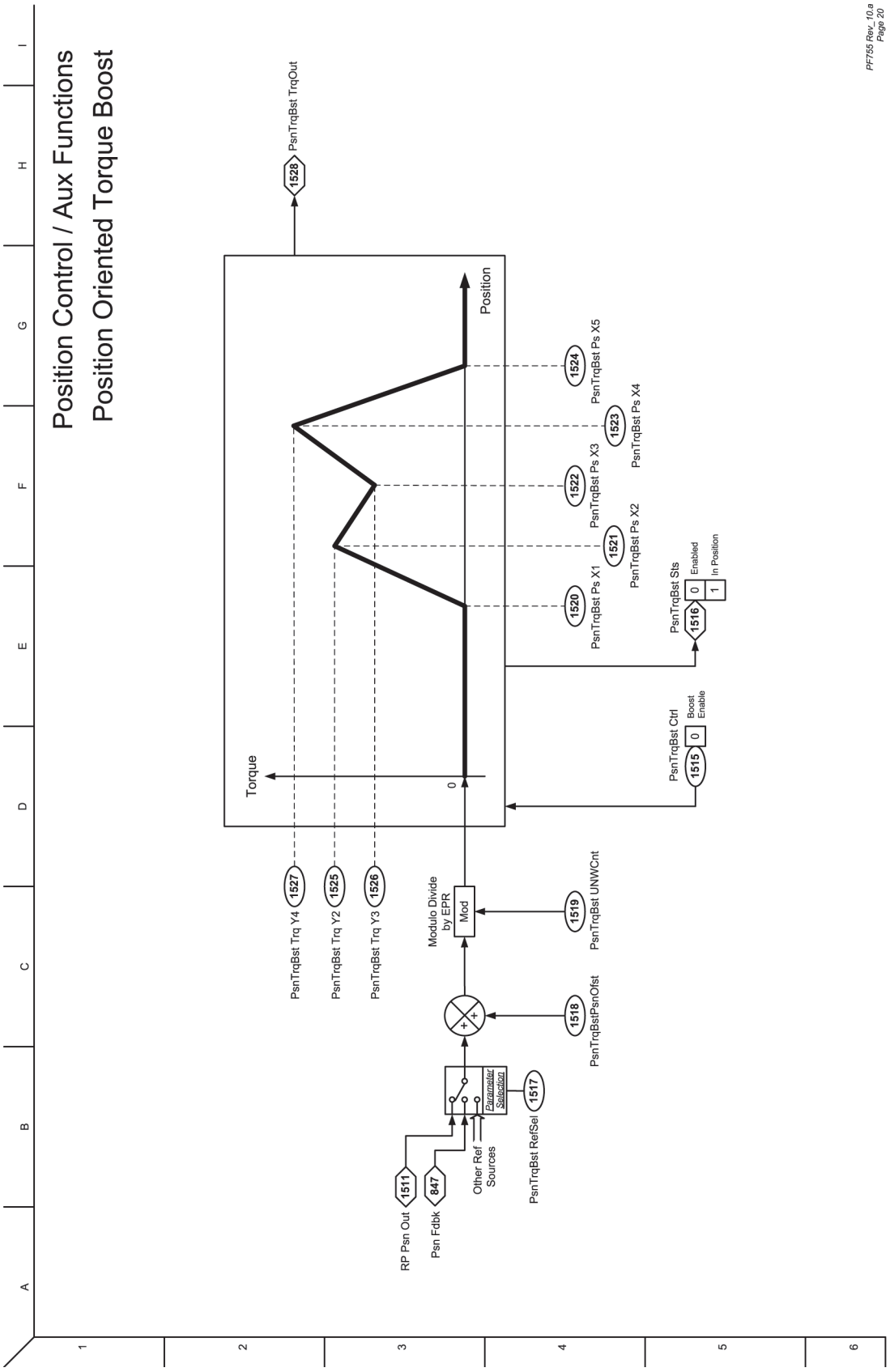

Figure 58 - Torque Control - Overview (IM & SPM)

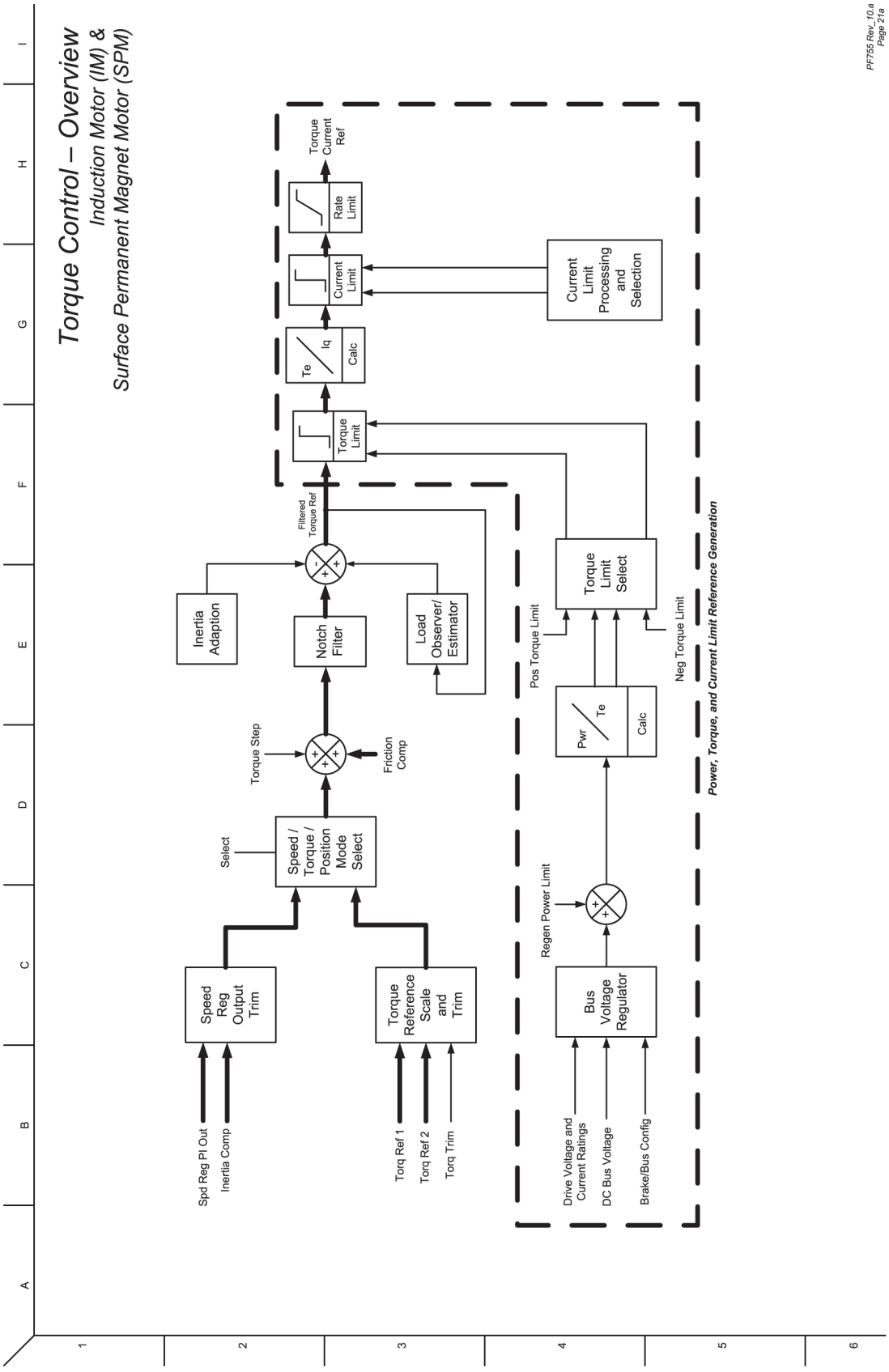

Figure 59 - Torque Control - Overview (IPM)

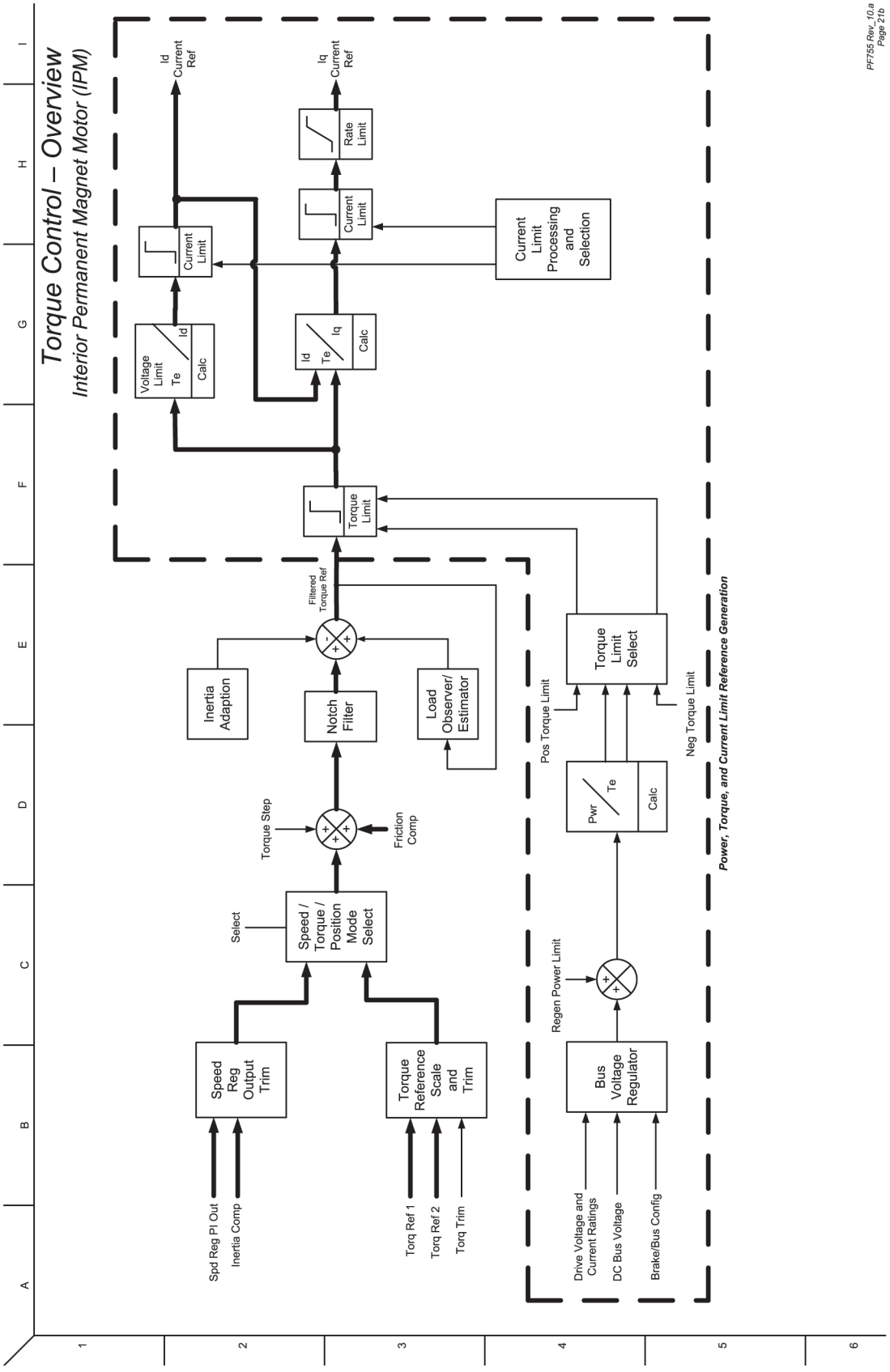

Figure 60 - Torque Control - Reference Scale & Trim

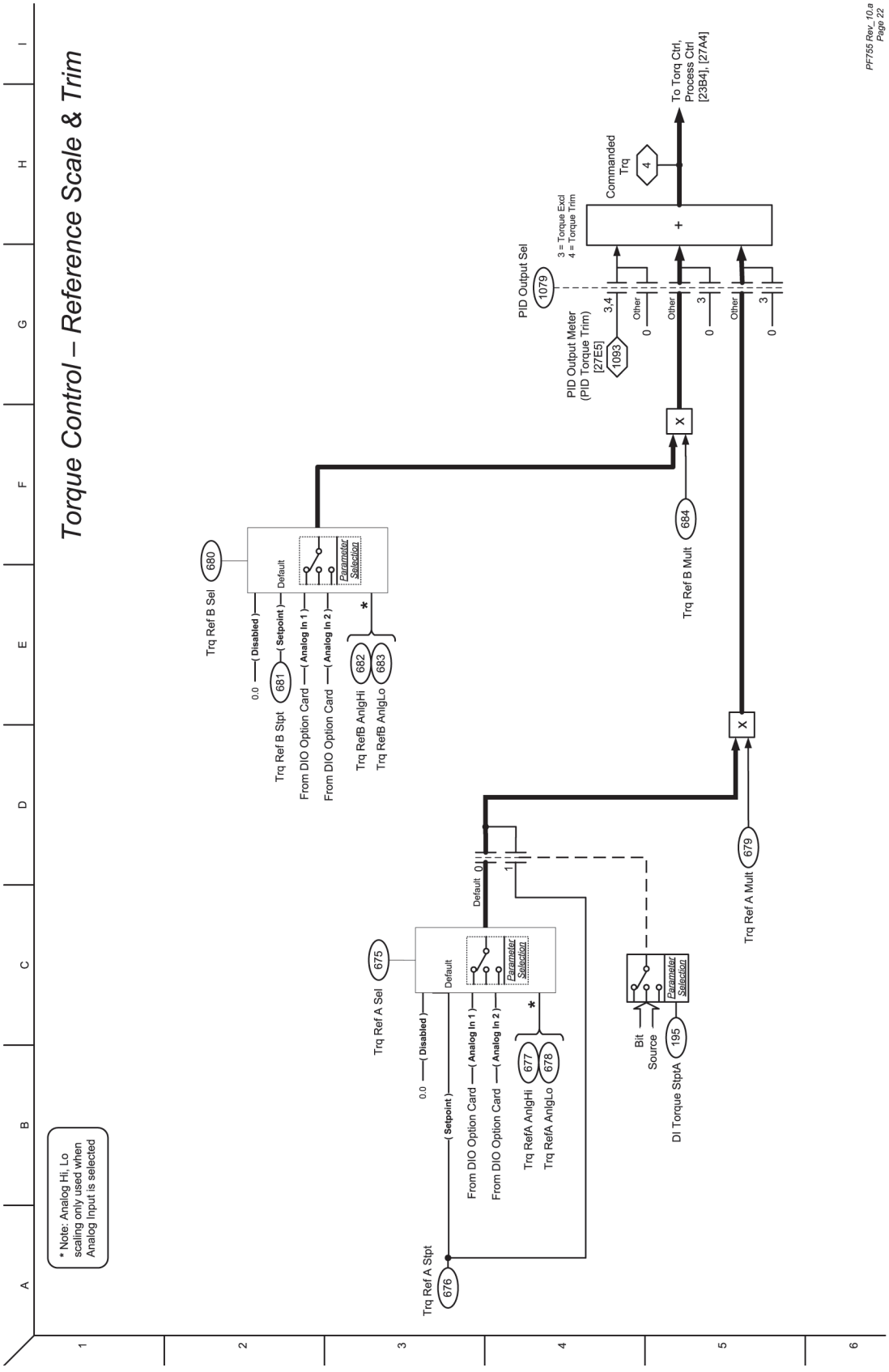

Figure 61 - Torque Control - Torque

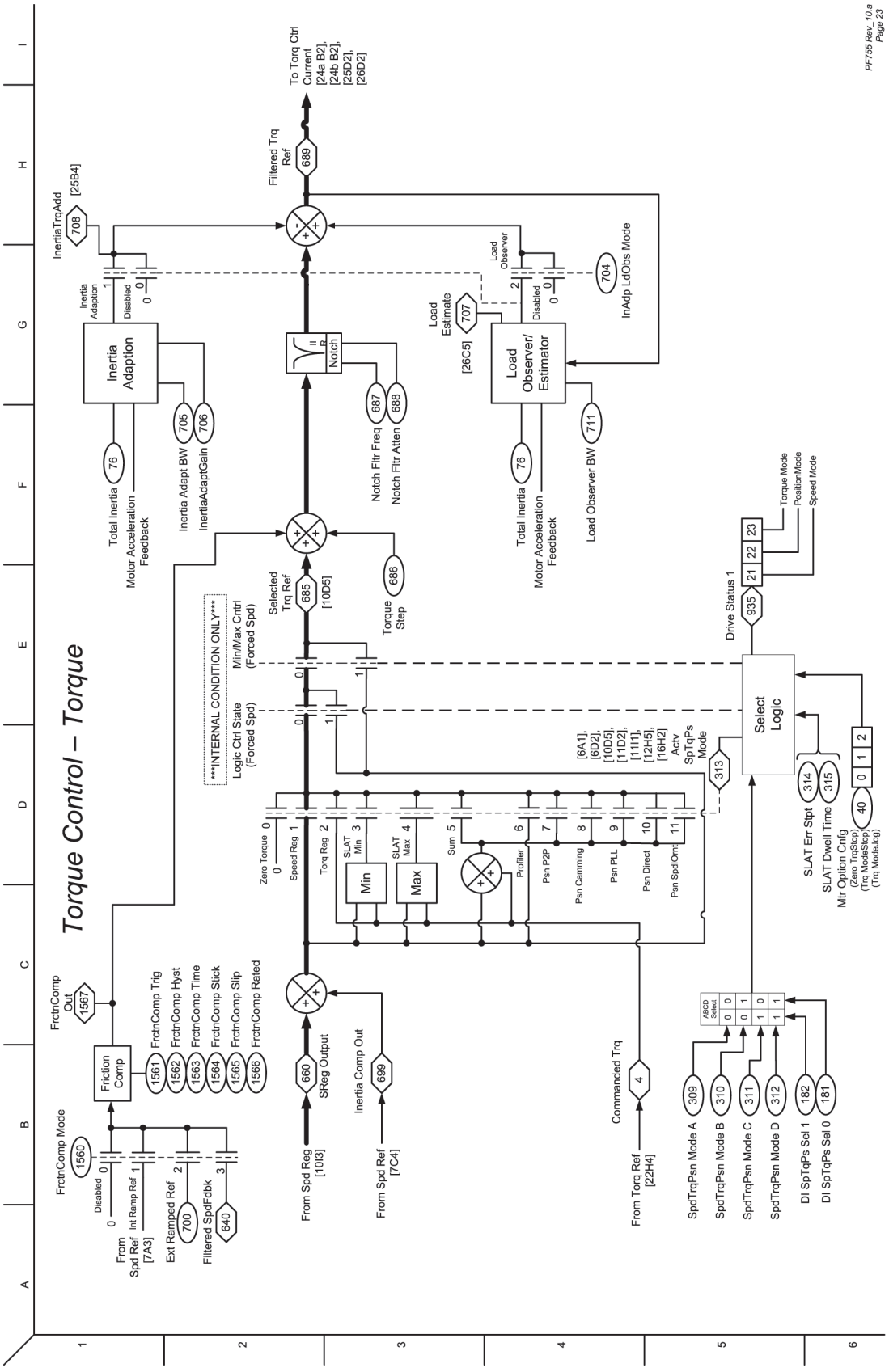

Figure 62 - Torque Control - Current (IM & SPM)

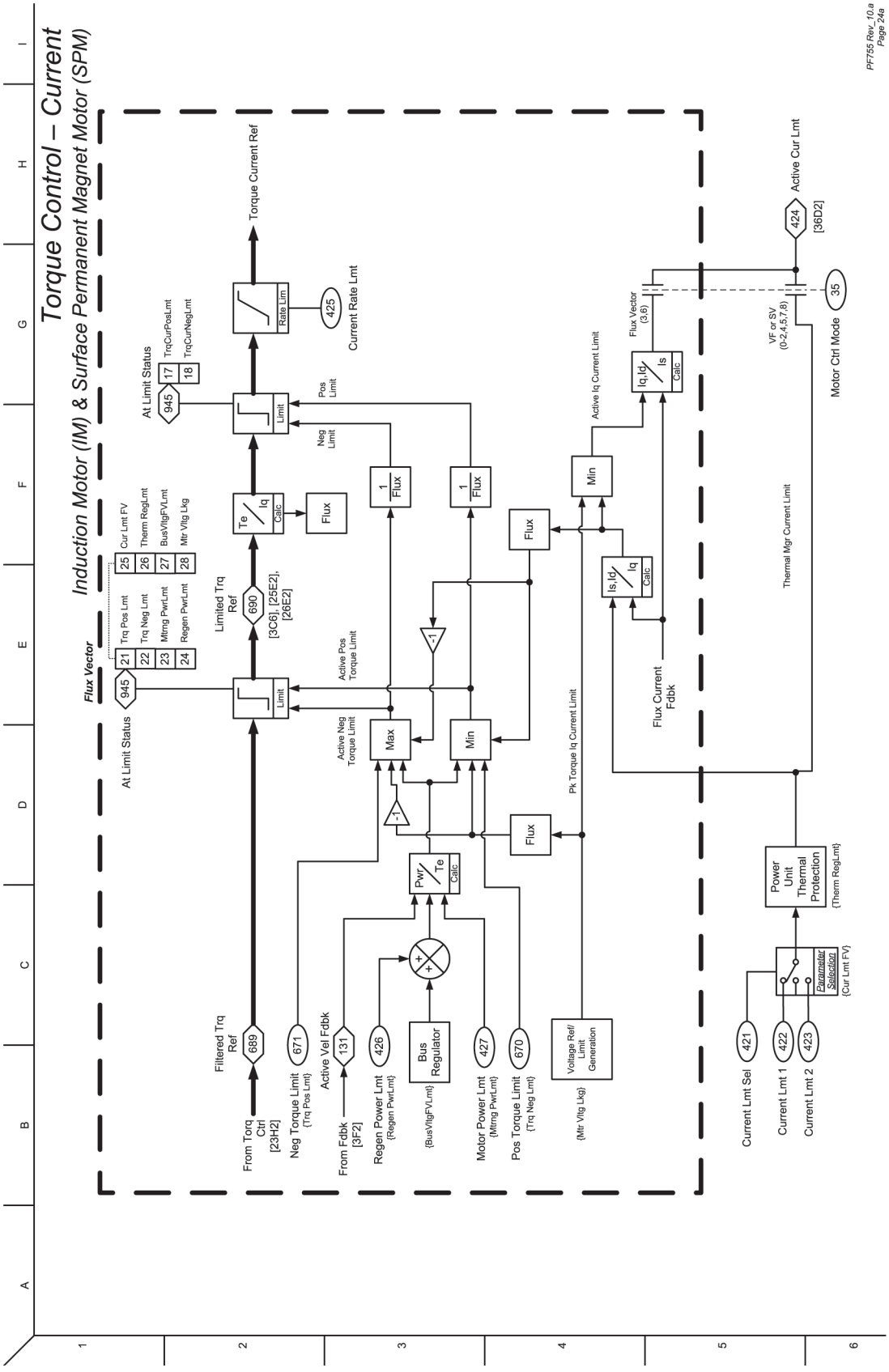

Figure 63 - Torque Control - Current (IPM)

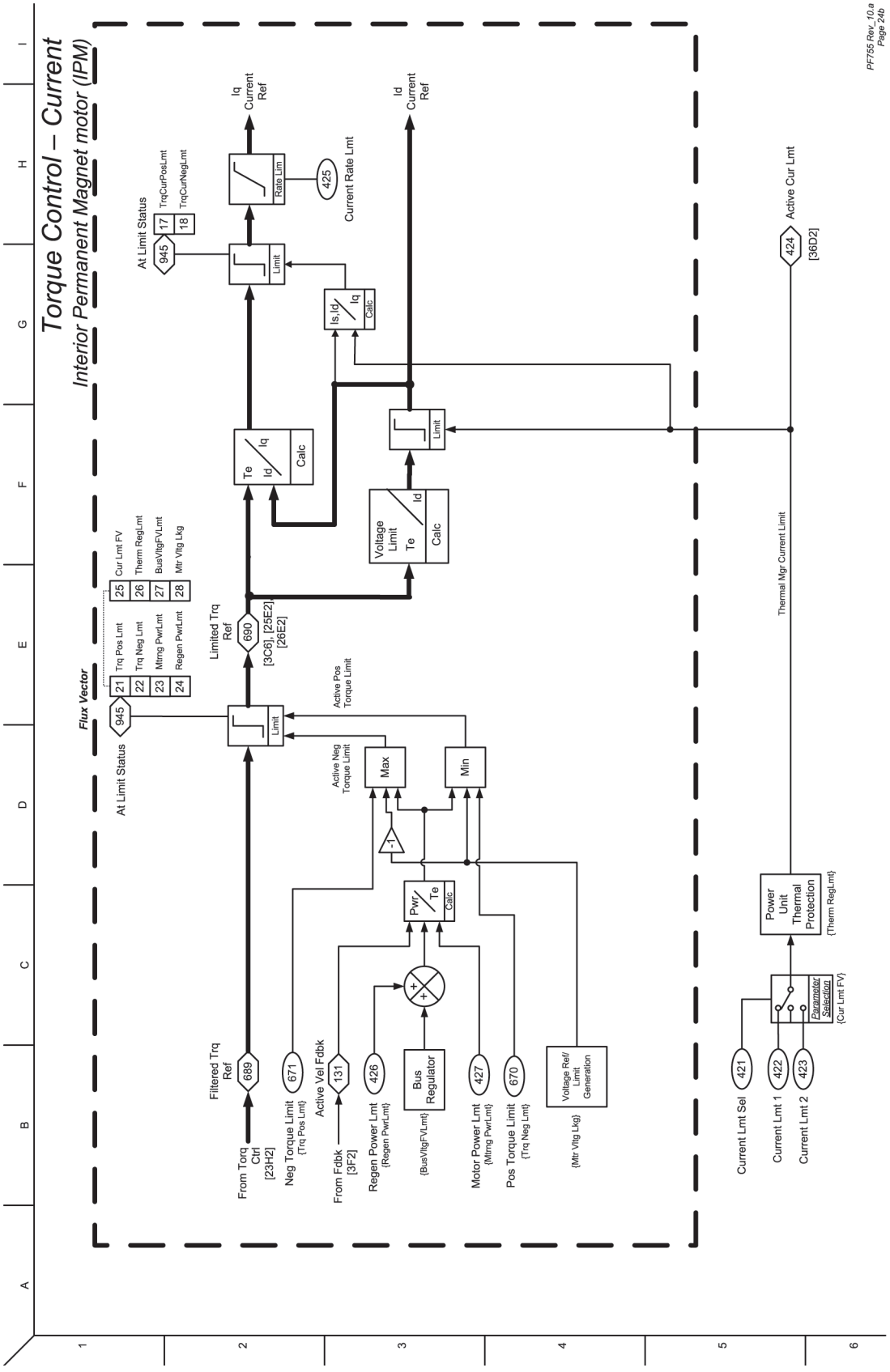

Figure 64 - Torque Control - Inertia Adaption

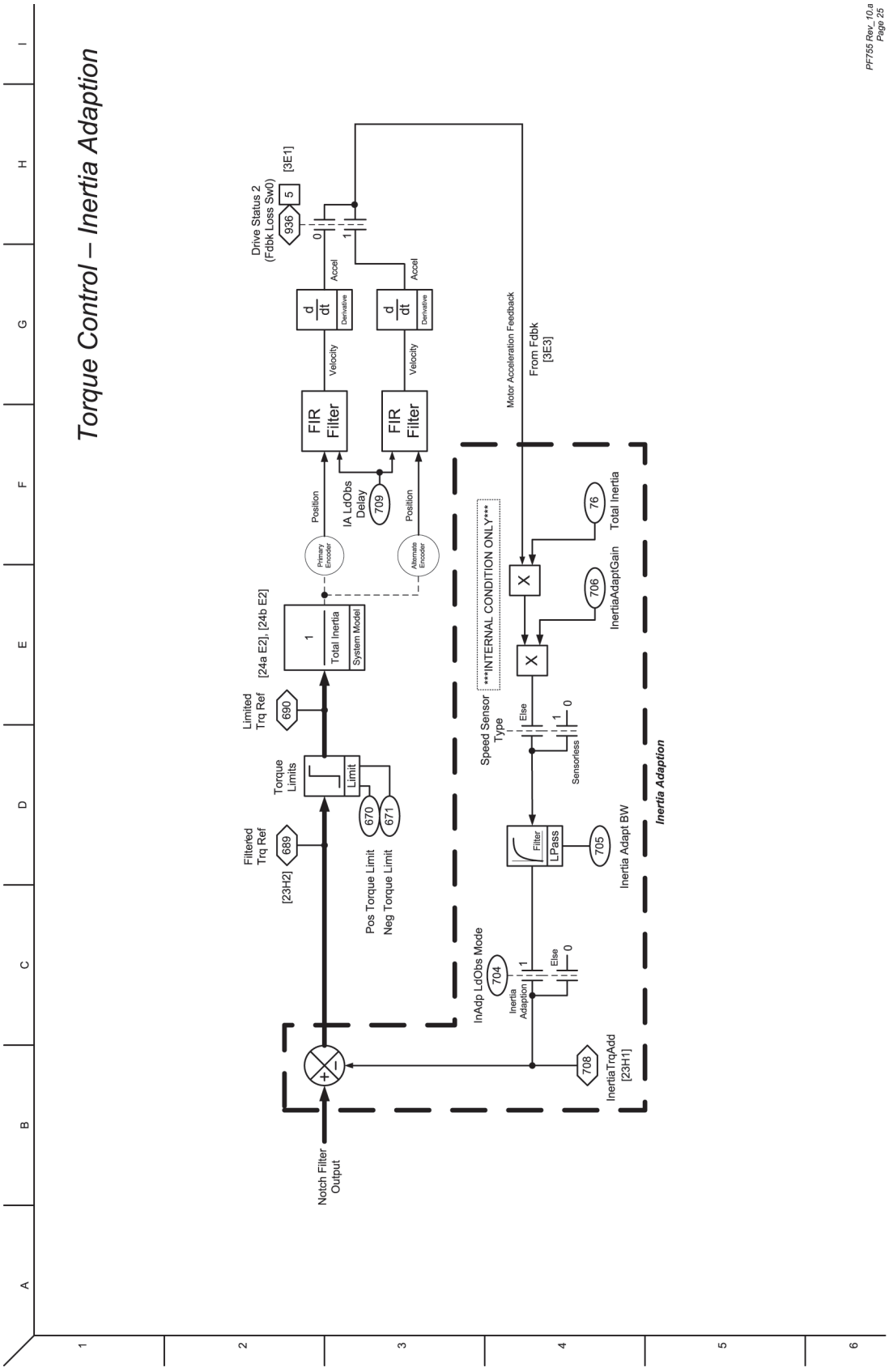

Figure 65 - Torque Control - Load Observer / Estimator

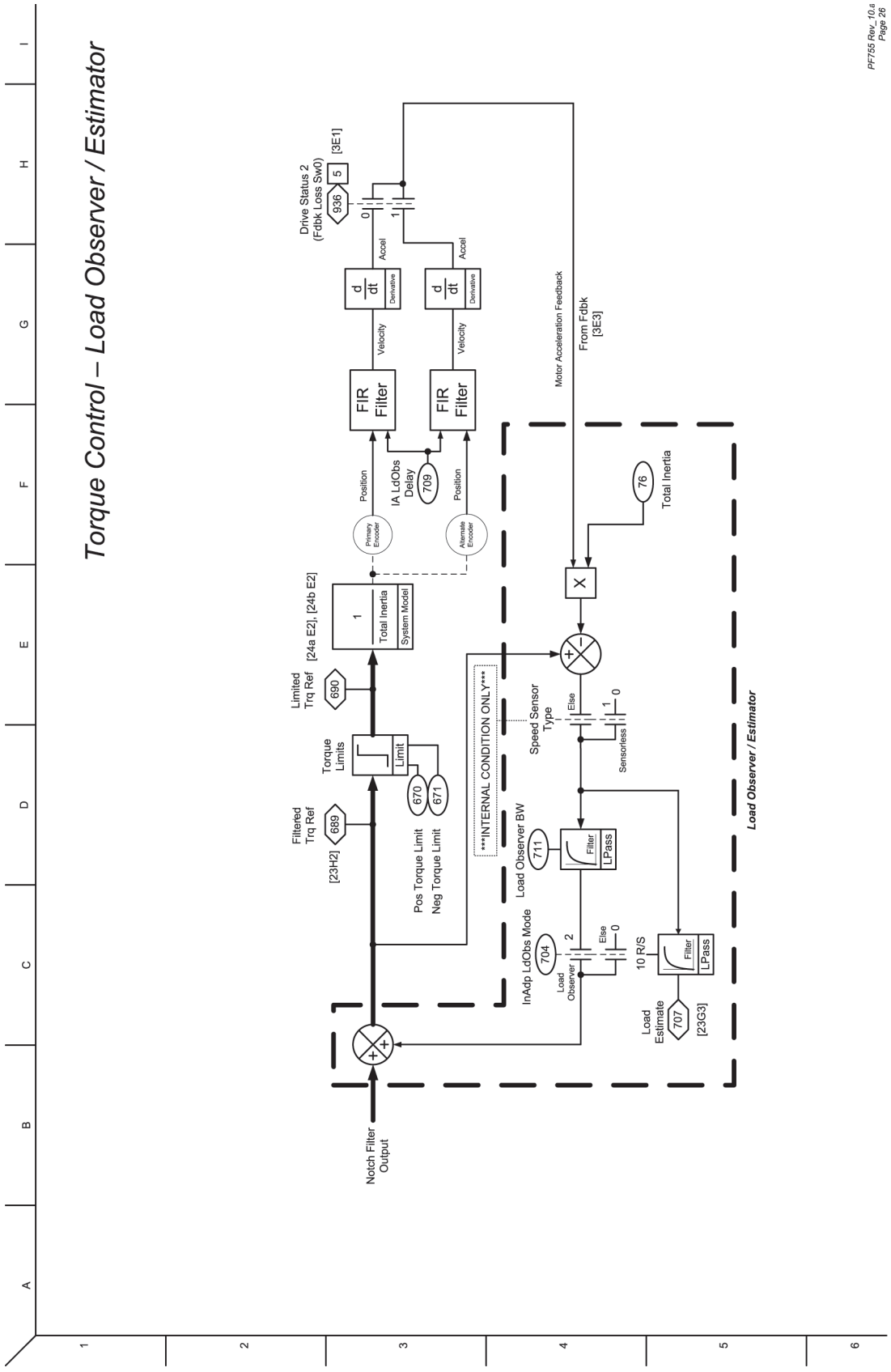

Figure 66 - Process Control (1)

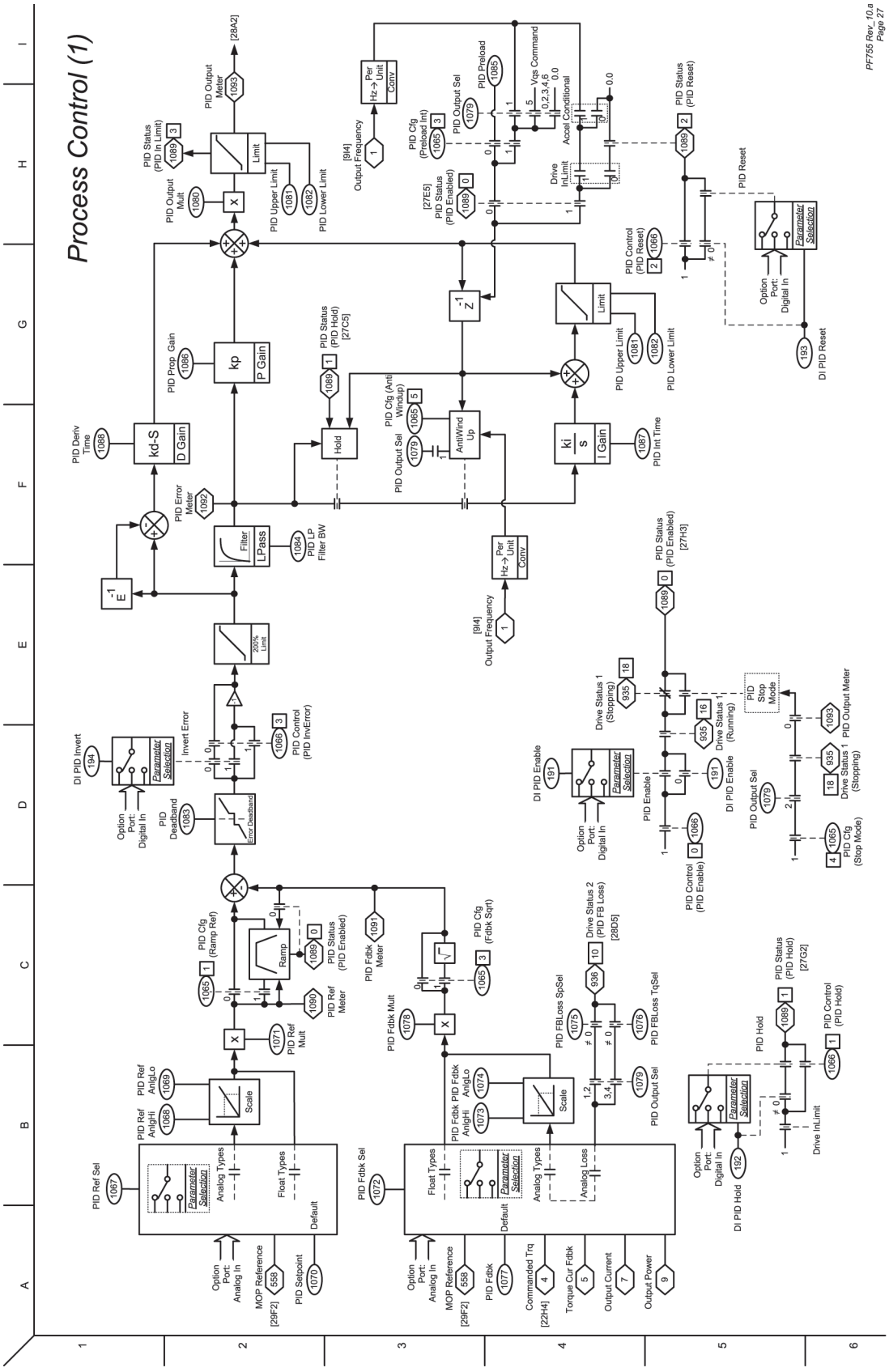

Figure 67 - Process Control (2)

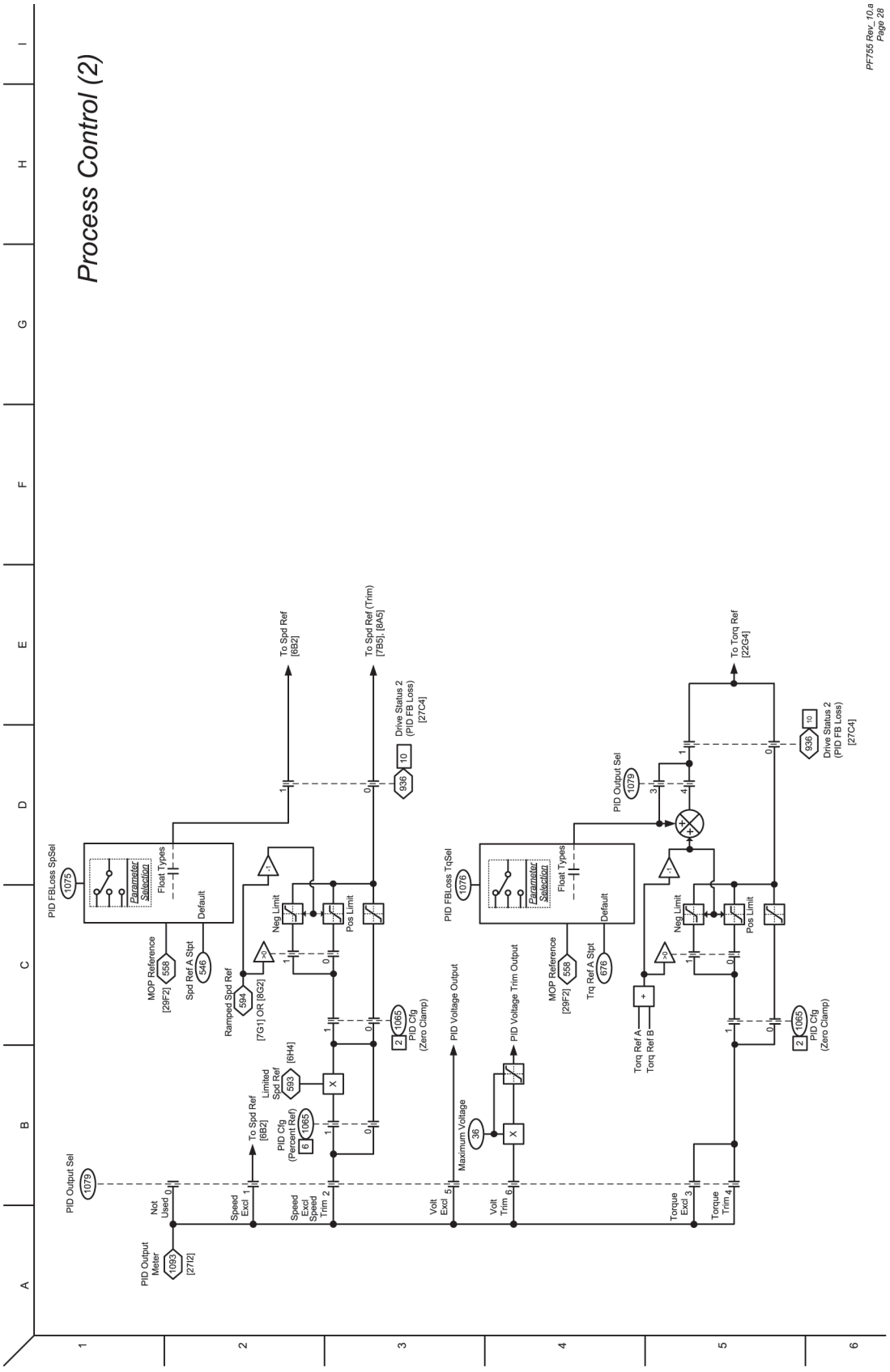

Figure 68 - MOP Control

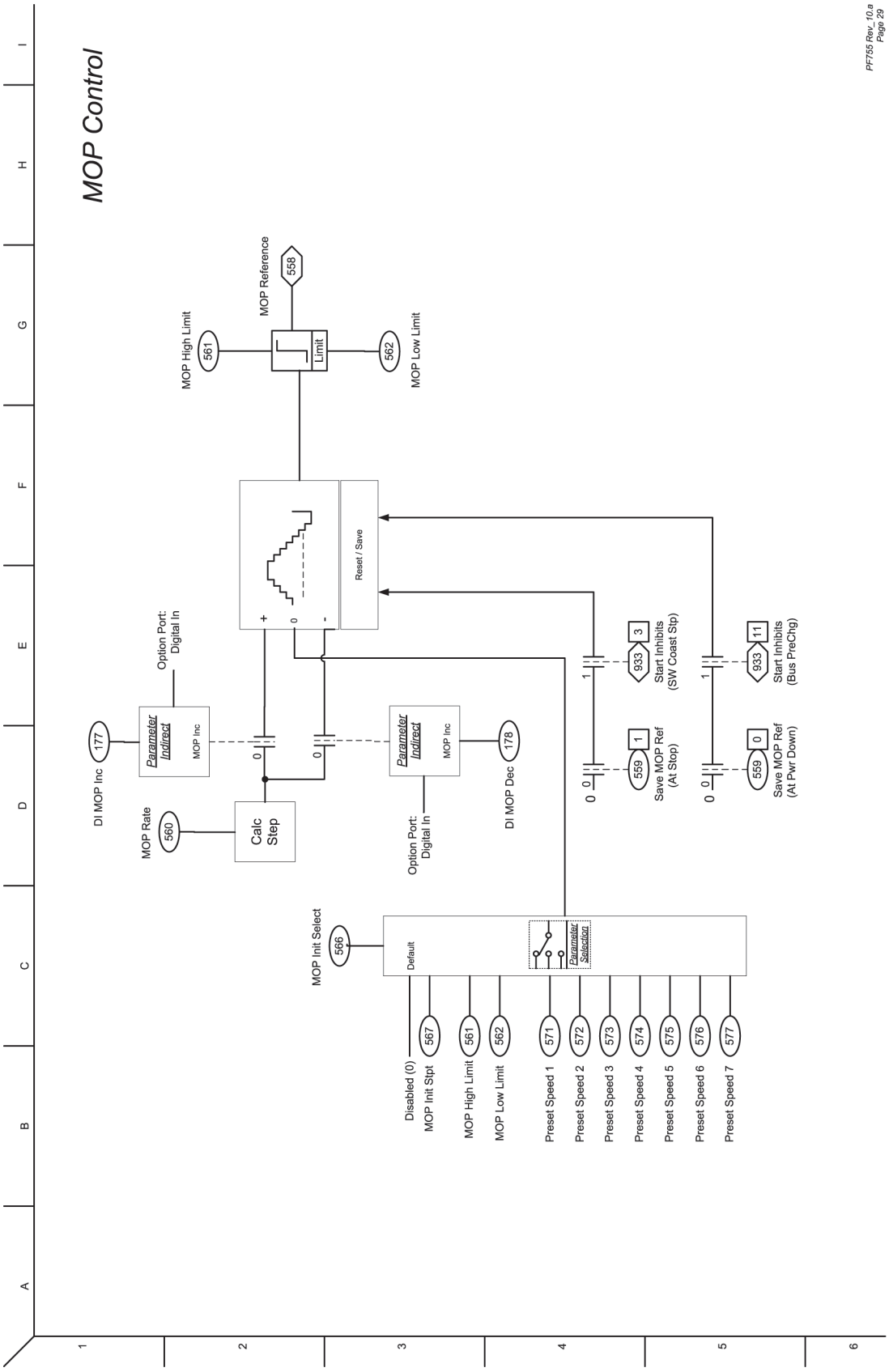

Figure 69 - 22-Series Inputs & Outputs - Digital

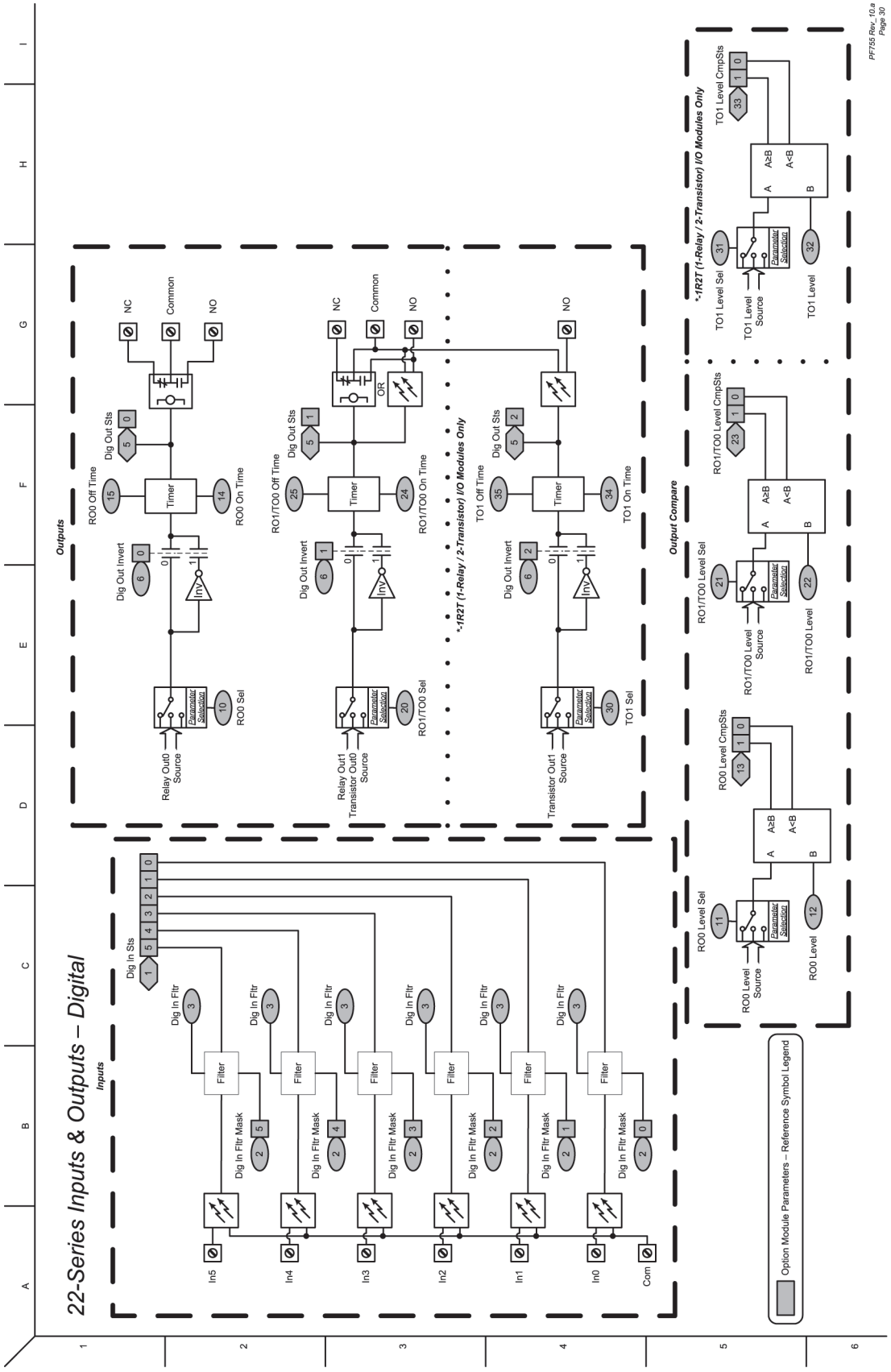

Figure 70 - 22-Series Inputs & Outputs - Analog

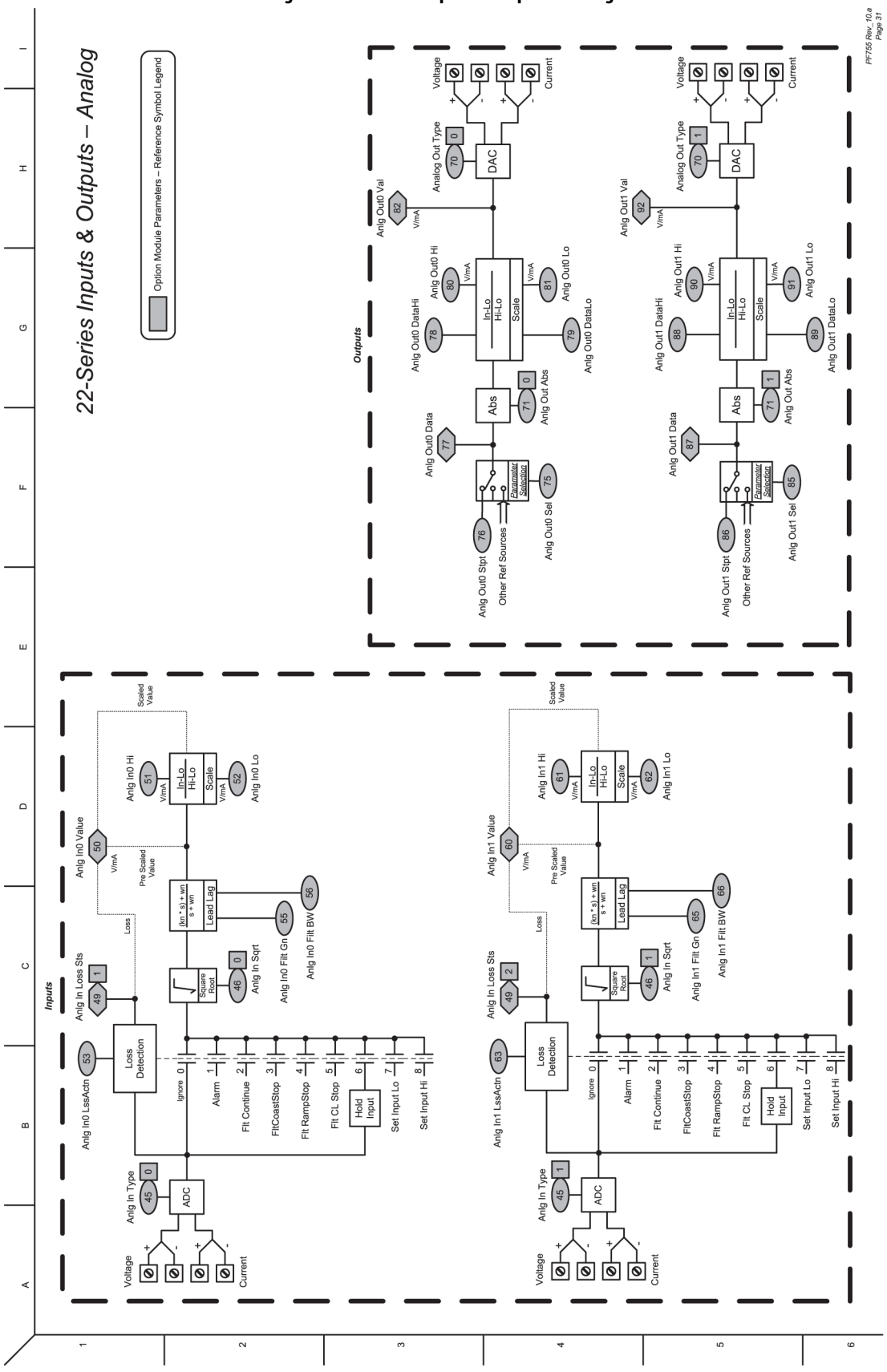

Figure 71 - 11-Series Inputs & Outputs - Digital

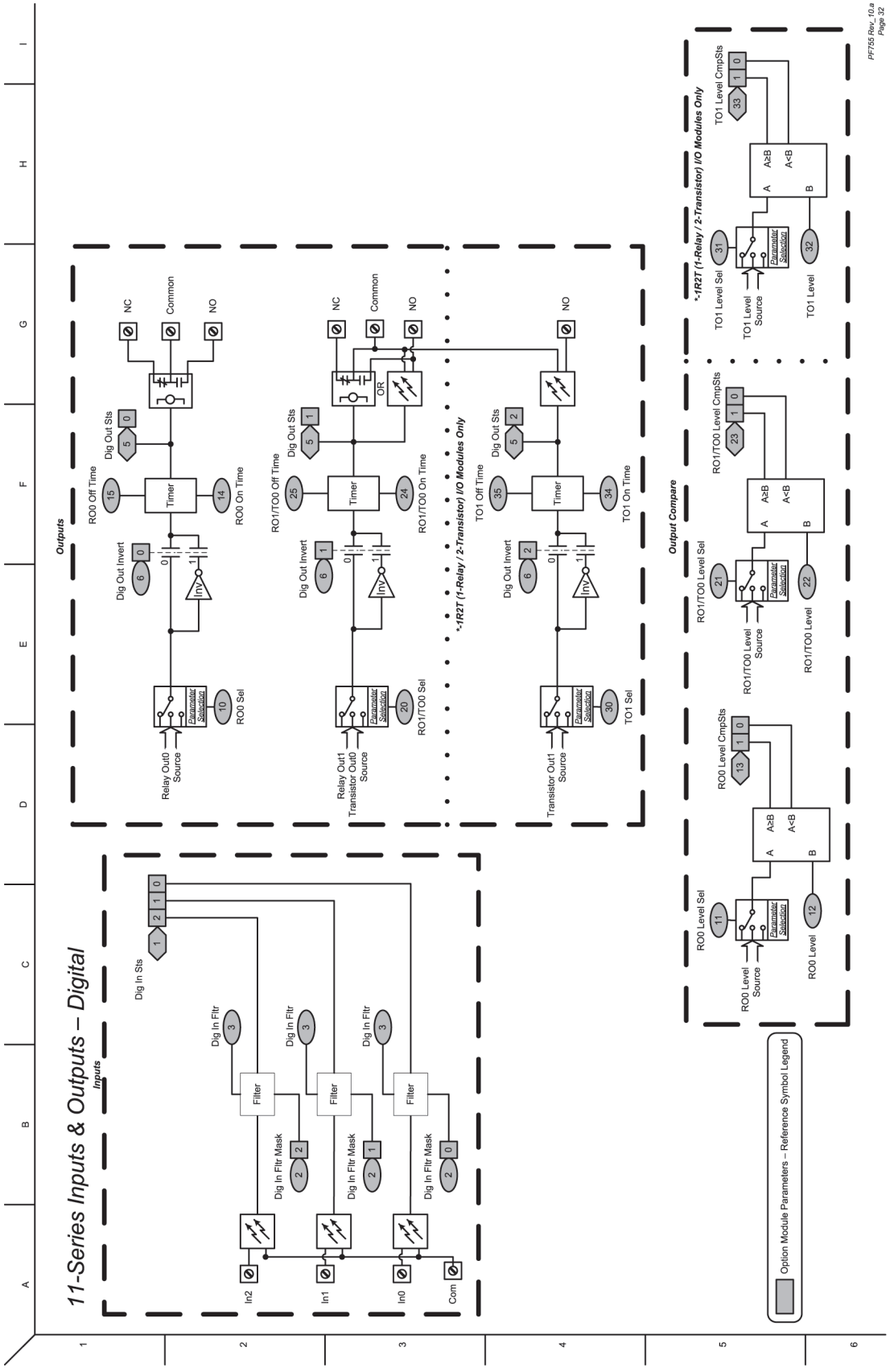

Figure 72 - 11-Series Inputs & Outputs - Analog

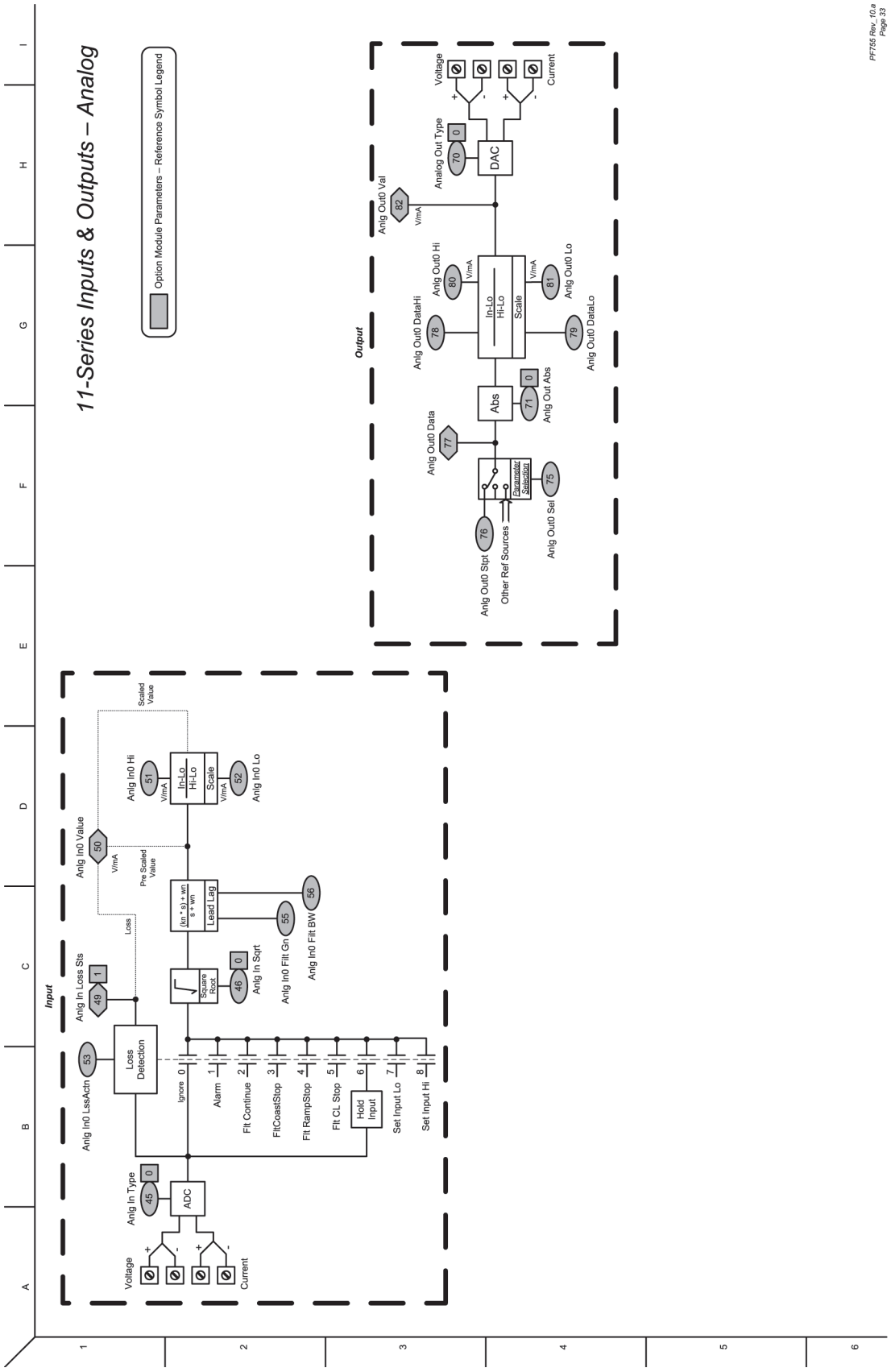

Figure 73 - 11-Series Inputs & Outputs - ATEX

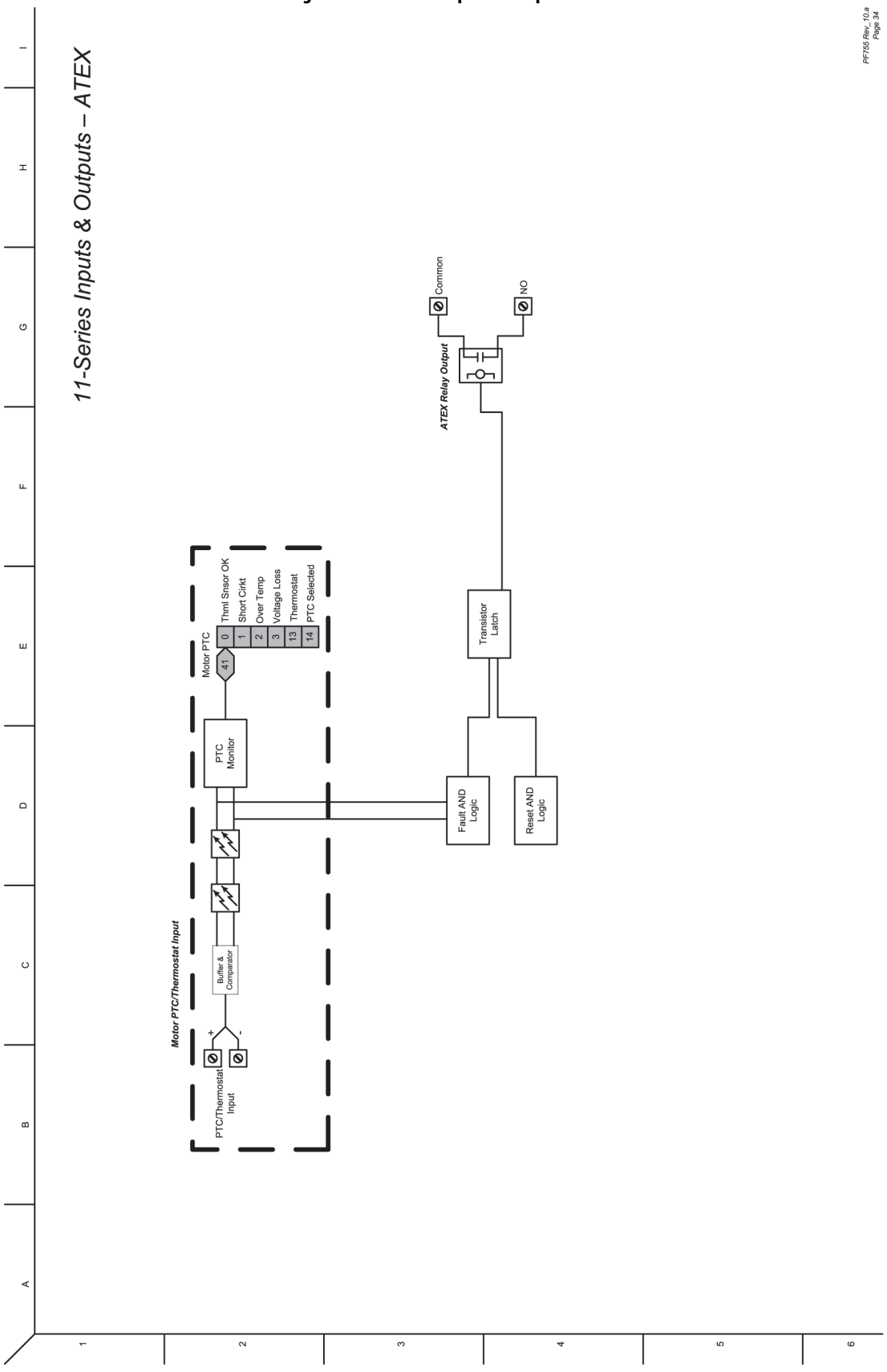

Figure 74 - Control Logic

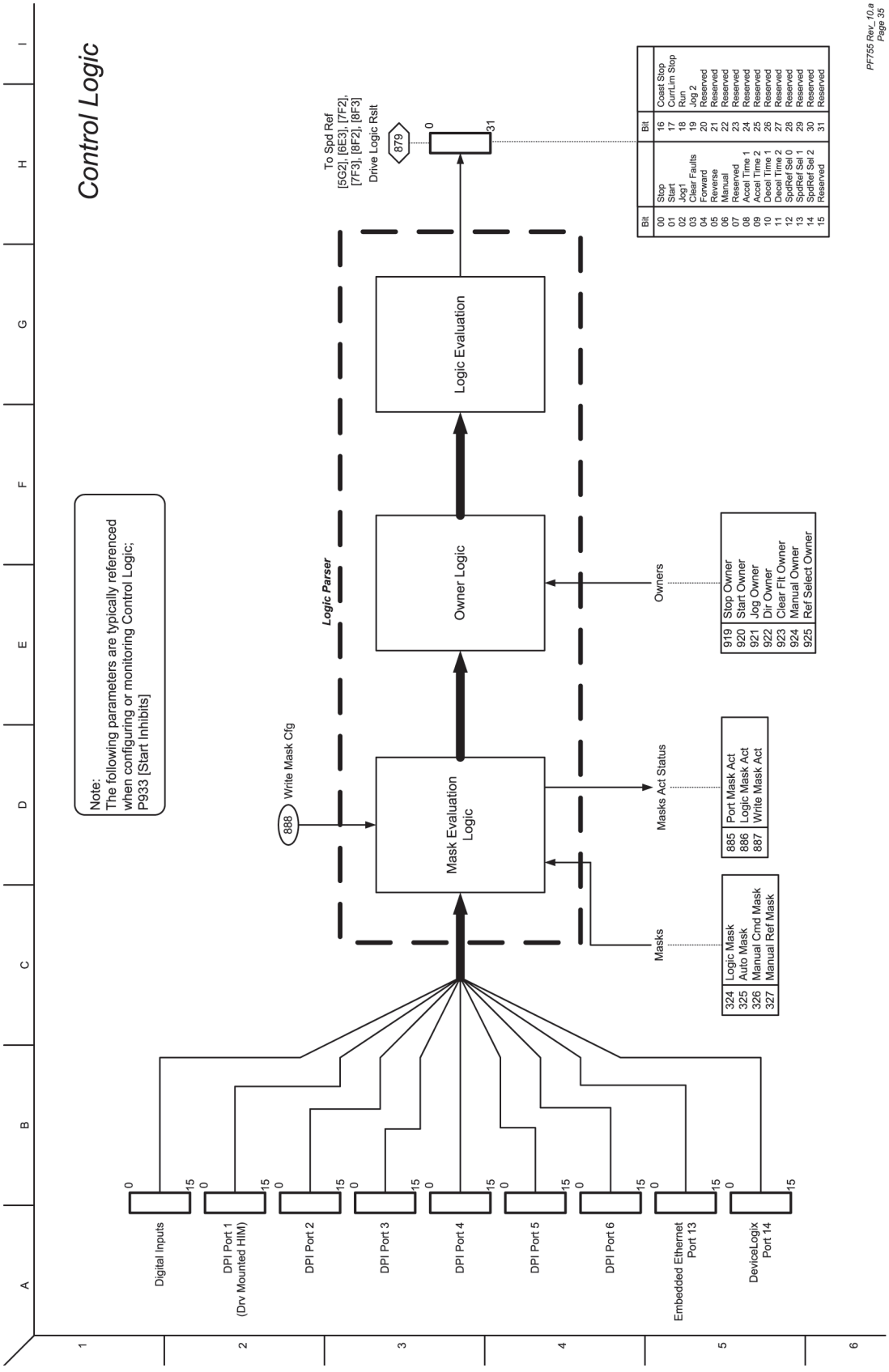

Figure 75 - Inverter Overload IT

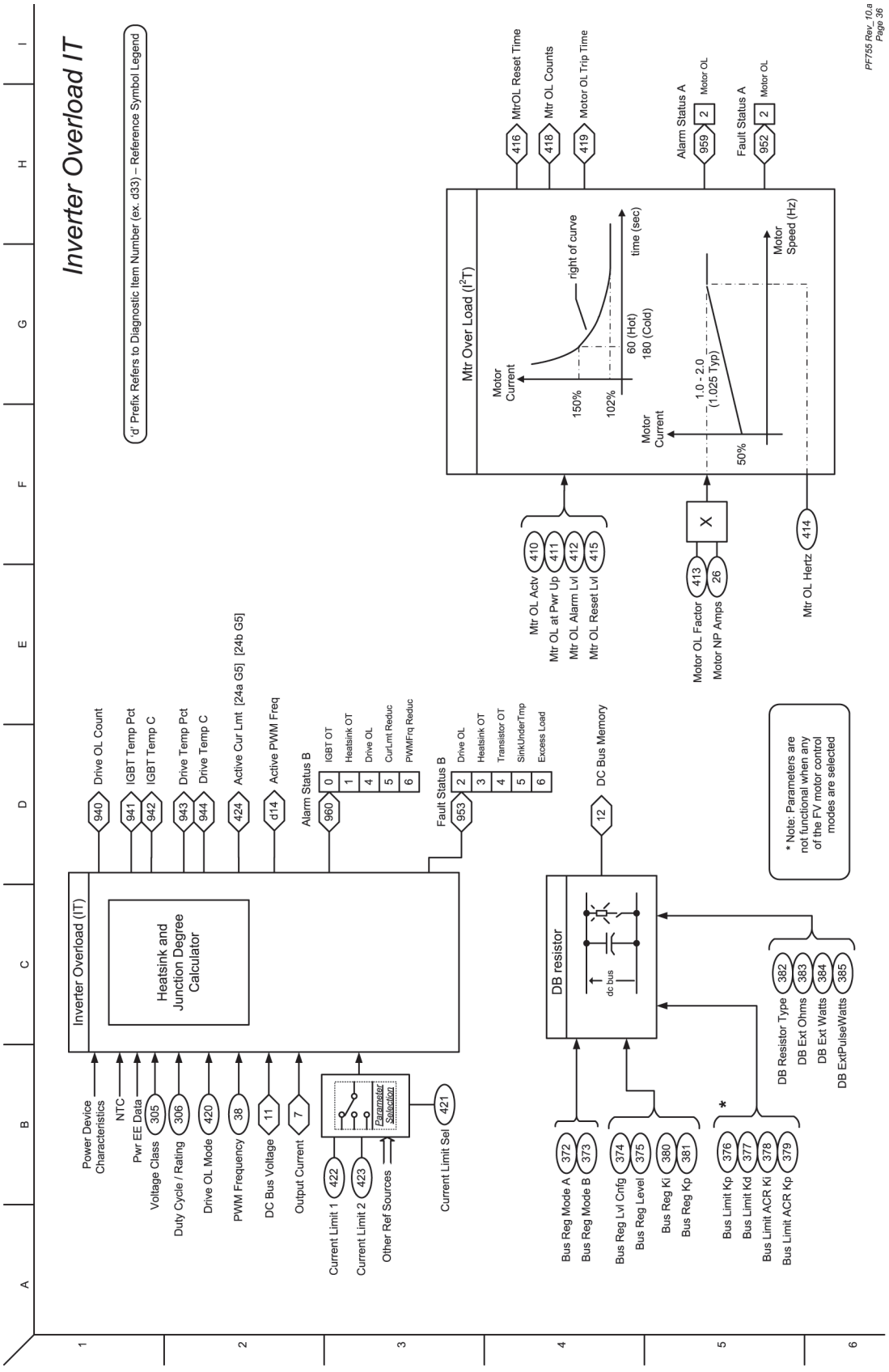

Figure 76 - Friction Compensation

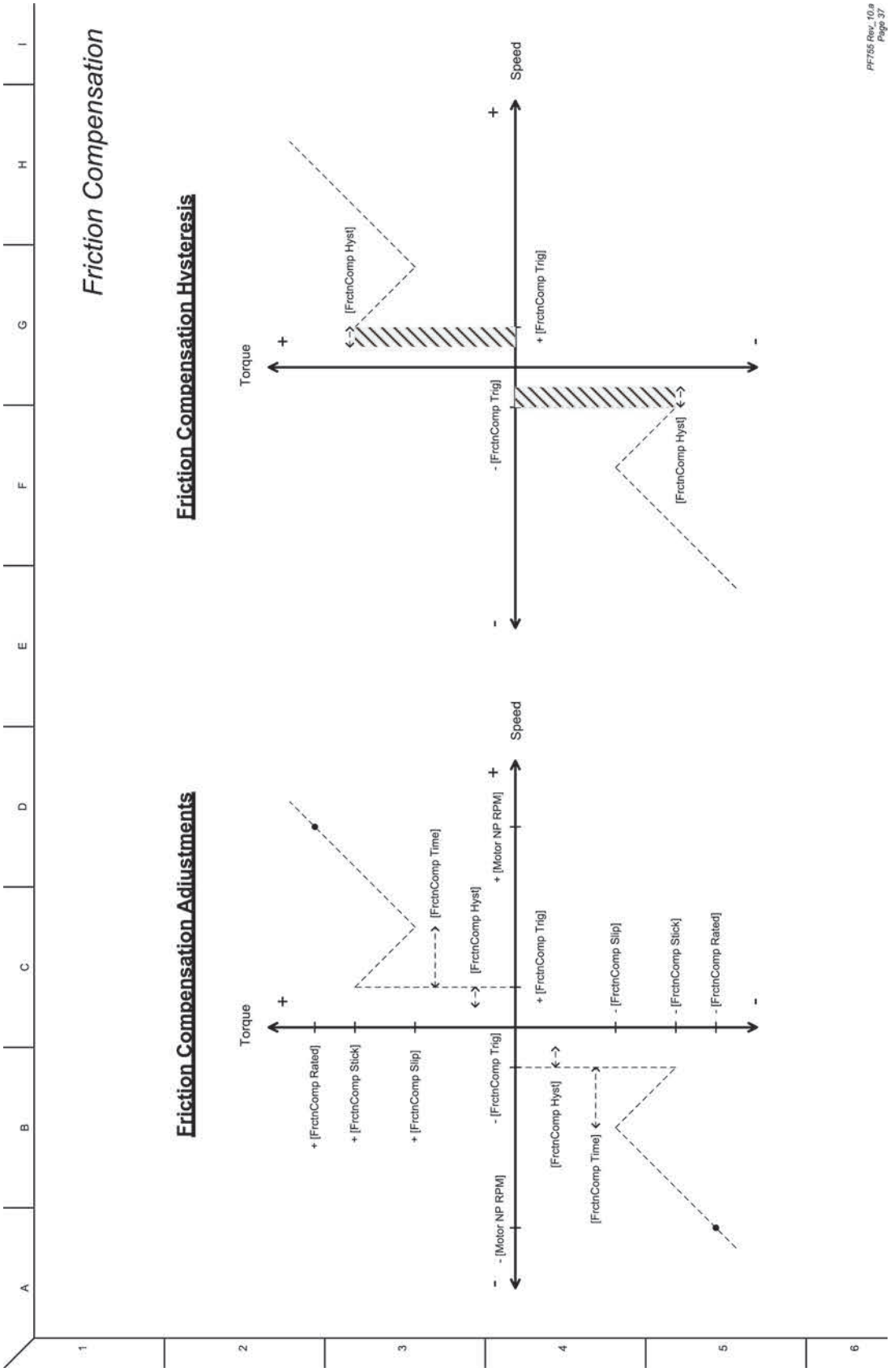

Figure 77 - Variable Boost Voltage Overview - Function Inputs/Outputs

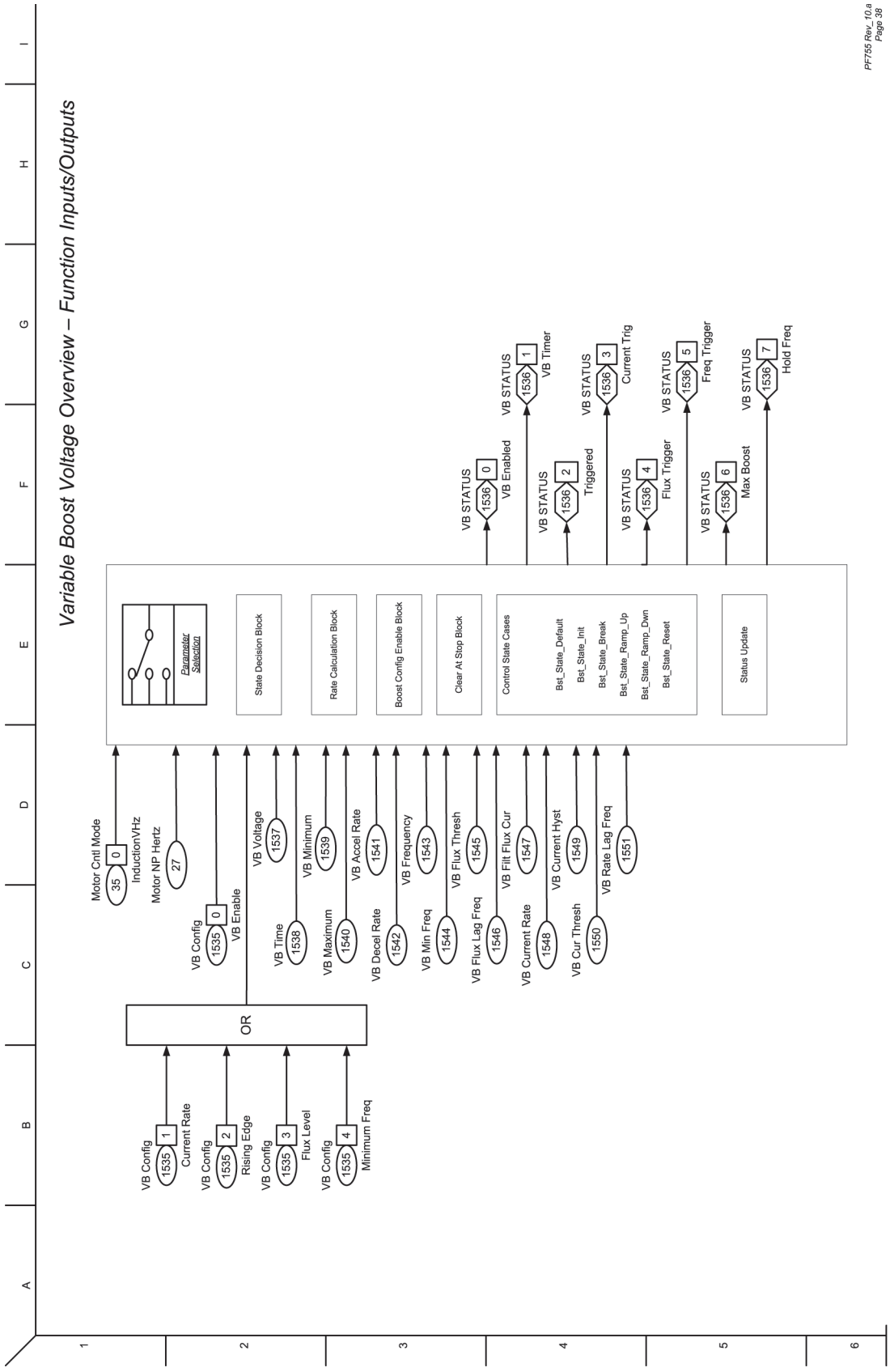

Figure 78 - Diagnostic Tools

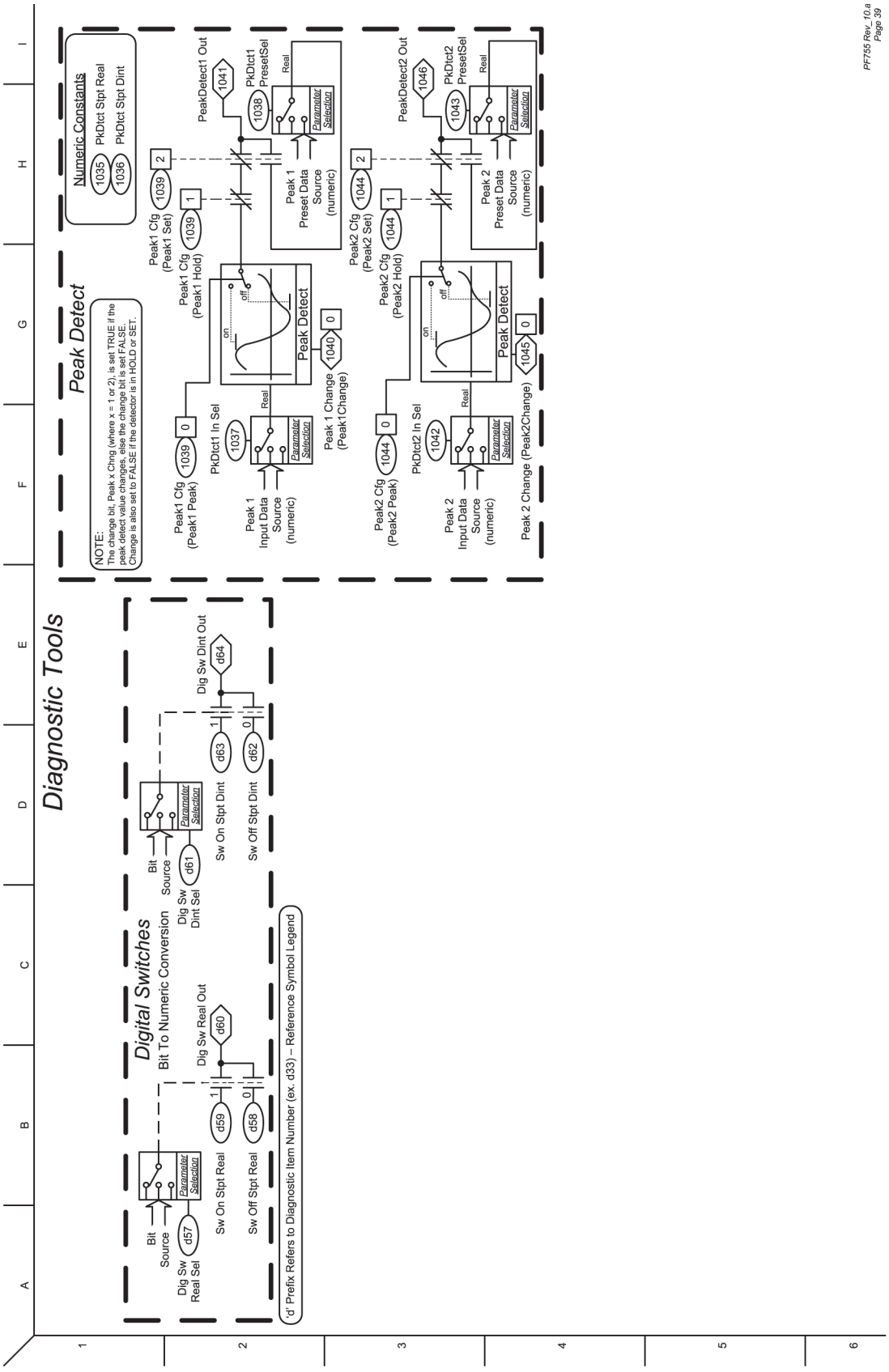

High-Speed Trend Wizard

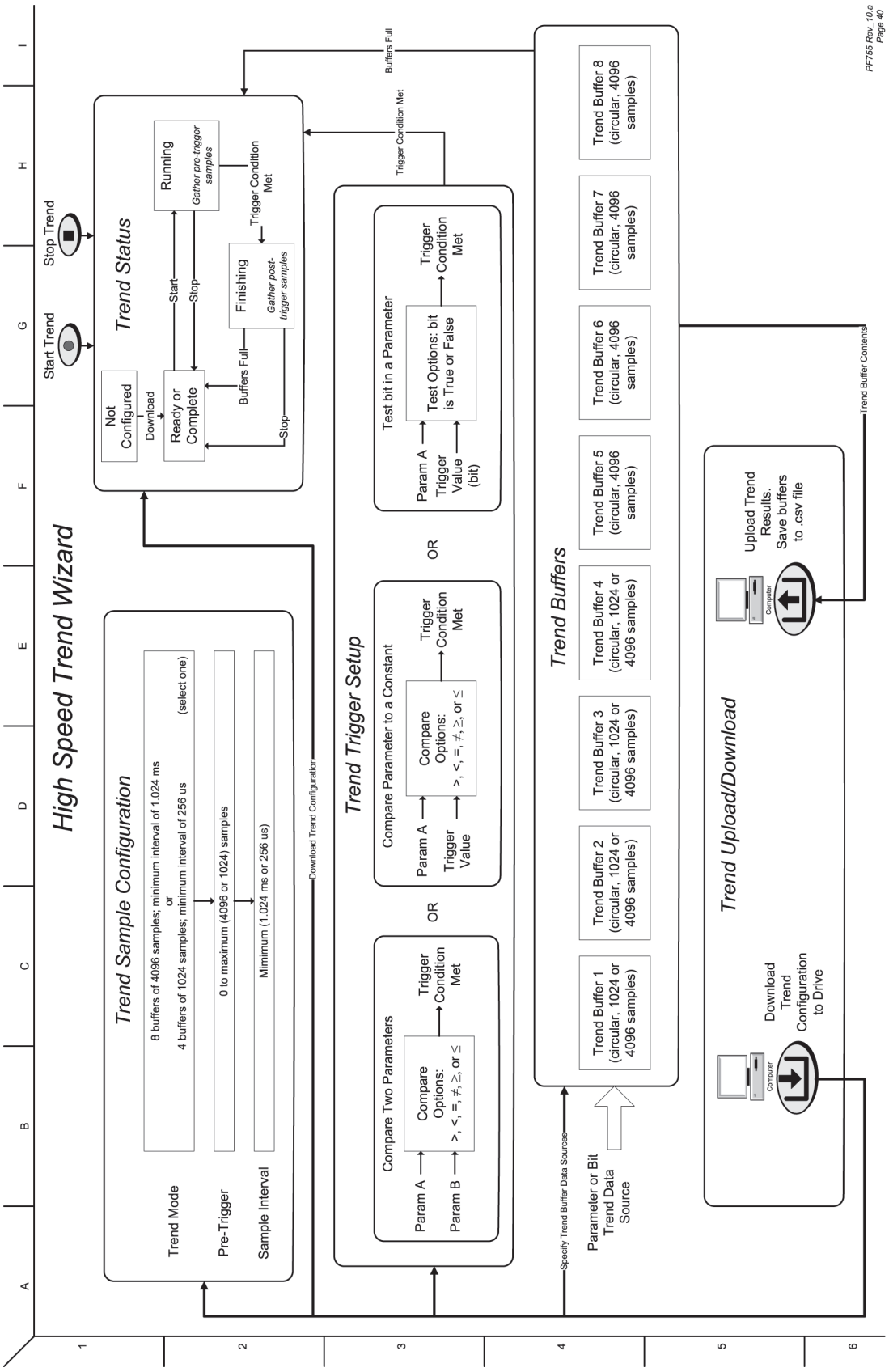

Application Notes

Voltage Tolerance

Drive Rating	Nominal Line Voltage	Nominal Motor Voltage	Drive Full Power Range	Drive Operating Range
380…400	380	380	380…528	342…528
	400	400	400…528	
	480	460	460…528	

Drive Full Power Range =	Nominal Motor Voltage to Drive Rated Voltage 10%. Rated current is available across the entire Drive Full Power Range
Drive Operating Range =	Lowest Nominal Motor Voltage - 10% to Drive Rated Voltage 10%. Drive Output is linearly derated when Actual Line Voltage is less than the Nominal Motor Voltage

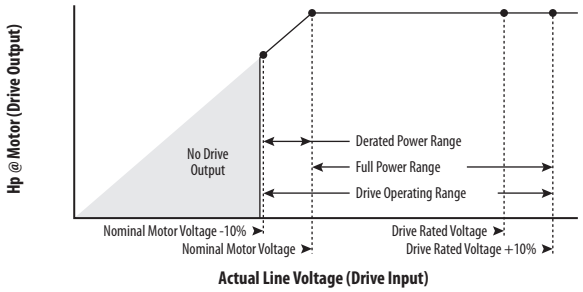

Example:

Calculate the maximum power of a 5 Hp, 460V motor that is connected to a 480V rated drive supplied with 342V Actual Line Voltage input.

- Actual Line Voltage / Nominal Motor Voltage = 74.3%
- 74.3% × 5 Hp = 3.7 Hp
- 74.3% × 60 Hz = 44.6 Hz

At 342V Actual Line Voltage, the maximum power the 5 Hp, 460V motor can produce is 3.7 Hp at 44.6 Hz.

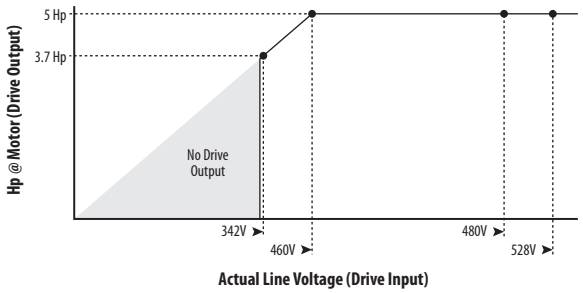

PowerFlex 755 Lifting/ Torque Proving

TorqProve™ is a PowerFlex® 755 drive feature that is intended for applications where proper coordination between motor control and a mechanical brake is required. Before releasing a mechanical brake, the drive checks motor output phase continuity and verifies proper motor control (torque proving). The drive also verifies that the mechanical brake has control of the load before the releasing drive control (brake proving). After the drive sets the brake, motor movement is monitored to help ensure the brake can hold the load.



ATTENTION: Loss of control in suspended load applications can cause personal injury and/or equipment damage. The drive or a mechanical brake must always control the loads. Parameters 1100…1113 are designed for lifting/torque prove applications. It is the responsibility of the engineer and/or end user to configure drive parameters, test any lifting functionality and meet safety requirements in accordance with all applicable codes and standards.

TorqProve can be operated with an encoder or encoderless. See "Attention" on page 372 before the use of TorqProve with no encoder.

TorqProve functionality with an encoder includes:

- Torque Proving (includes flux up and last torque measurement)
- Brake Proving
- Brake Slip (feature slowly lowers load if brake slips/fails)
- Float Capability (ability to hold full torque at zero speed)
- Micro positioning
- Fast Stop
- Speed Deviation Fault, Output Phase Loss Fault, Encoder Loss Fault.

Encoderless TorqProve functionality includes:

- Torque Proving (includes flux up and last torque measurement)
- Micro positioning
- Fast Stop
- Speed Deviation Fault, Output Phase Loss Fault.

IMPORTANT Brake Slip detection and Float capability (ability to hold load at zero speed) are not available in encoderless TorqProve.

Figure 79 - Torque Proving Flow Diagram

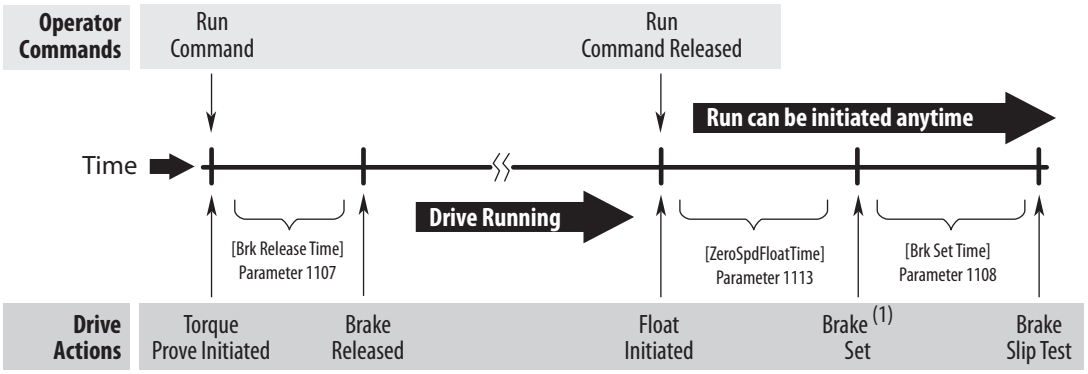

All times between Drive Actions are programmable and can be made very small (i.e. Brake Release Time can be 0.1 seconds)

(1) For torque proving to function properly, wire a mechanical brake to a relay output on a digital I/O option module. On the I/O module, set P10 [RO0 Sel] to Port 0, P1103 [Trq Prove Status] Bit 4 "Brake Set" and set P6 [Dig Out Invert] Bit 0 "Relay Out 0" = 1.

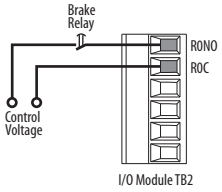

Tuning the Motor for Torque Prove Applications

It is possible to use the startup routine to tune the motor (See page 19). However, it is recommended to disconnect the motor from the hoist/crane equipment during the routine.

ATTENTION: To guard against personal injury and/or equipment damage due to an unexpected brake release, verify the digital output that is used for brake connections and/or programming. The PowerFlex 755 drive **does not control the mechanical brake until TorqProve is enabled**. If the brake is connected to a digital output, it could be released. If necessary, **disconnect the digital output until wiring/programming can be completed and verified**.

Crane Set up with Encoder Feedback

These setup instructions assume the following.

- Drive and motor size have been carefully selected
- External brake resistor has been properly sized
- The drive is at factory defaults.
  If not, unplug the output relay terminal block and issue a reset to factory defaults for the HOST and all PORTS. Plug terminal block back in.
- Programming is done via DriveExecutive™, DriveExplorer™, or Connected Components Workbench™ software.
- Crane control is done via Run forward / Run Reverse inputs
- Mechanical brake control is wired to Output Relay 0
- The drive is equipped with an incremental (20-750-ENC-1), a dual incremental encoder board (20-750-DENC-1), or a universal feedback encoder (20-750-UFB-1).
- The encoder is mounted on the back of the motor (not behind the gearbox)
- Encoder specification: Quadrature differential (A, A-, B, B-), Line driver output, Minimum 1000PPR 5V, or 12V signals (12V preferred)



ATTENTION: Loss of control in suspended load applications can cause personal injury and/or equipment damage. The drive or a mechanical brake must always control the loads. Parameters 1100…1113 are designed for lifting/torque prove applications. It is the responsibility of the engineer and/or end user to configure drive parameters, test any lifting functionality and meet safety requirements in accordance with all applicable codes and standards.

Set Up the Drive

1. Adjust parameter settings and enter nameplate data.

Parameter	Setting
Brake Details	
P370 [Stop Mode A]	1 "Ramp"
P372 [Bus Reg Mode A]	2 "Dyn Brake" (Dynamic Braking)
P382 [DB Resistor Type]	1 "External"
P383 [DB Ext Ohms]	Total Ohm value of external resistor.
P384 [DB Ext Watts]	Total real watt rating of external resistor.
P385 [DB ExtPulseWatts]	Maximum value for properly sized resistor.
P426 [Regen Power Lmt]	–800 % (Minimum Value)
Motor Nameplate Data	
P25 [Motor NP Volts]	Motor nameplate voltage.
P26 [Motor NP Amps]	Motor nameplate current.
P27 [Motor NP Hertz]	Motor nameplate frequency.
P28 [Motor NP RPM]	Motor nameplate speed.
P29 [Mtr NP Pwr Units]	0 "HP" or 1 "kW"
P30 [Motor NP Power]	Motor nameplate power rating.
P31 [Motor Poles]	Number of motor poles.
Motor Control	
P35 [Motor Ctrl Mode]	3 "Induction FV"
Maximum Frequency	
P37 [Maximum Freq]	Motor nameplate frequency.
Drive Duty Rating	
P306 [Duty Rating]	1 "Heavy Duty"
Overload Hertz	
P414 [Mtr OL Hertz]	0.00 (Ensures that no current derating is applied.)
Autotune Torque	
P71 [Autotune Torque]	100.00 % (Used during rotate tuning and inertia tuning.)
Protection	
P420 [Drive OL Mode]	1 "Reduce PWM"
P422 [Current Limit 1]	200 % of P26 [Motor NP Amps]
P444 [OutPhaseLossActn]	3 "FltCoastStop"

Motor Tune Routines

Static Tune
This routine measures the motor characteristics with the brake set (brake closed).

Rotate Tune
This routine gives better results if connected equipment allows. This routine requires the mechanical brake to open and the motor be allowed to run at minimum of 70 % of nominal speed.

Inertia Tune
This routine measures the time to accelerate the system to the nominal speed.

Static Tune

During a Static Tune, the mechanical brake remains set.

1. Enter Static Tune parameter settings.

Drive Parameter	Setting
P70 [Autotune]	2 "Static Tune"

I/O Module Parameter (Port X)	Setting
P10 [R00 Sel]	0.00 "Disabled"

2. To open the Control Bar, click the Controls icon  .

3. Press the Start button on the Control Bar.

   When the Static Tune routine is complete, P70 [Autotune] changes to 0 "Ready."

Verify Drive Direction

1. Perform a Direction Test to verify proper direction of crane.

I/O Module Parameter (Port *n*)	Setting
P164 [DI Run Forward]	Port Number, P1 [Dig In Sts], Bit *n* (Run Fwd Input)
P165 [DI Run Reverse]	Port Number, P1 [Dig In Sts], Bit *n* (Run Rev Input)

IMPORTANT The crane can be started via the crane control unit.

Drive Parameter	Setting
P545 [Spd Ref A Sel]	Port 0, P571 [Preset Speed 1]
P571 [Preset Speed 1]	15 Hz (Set to low speed for direction test.)
P535 [Accel Time 1]	2.00 Secs
P537 [Decel Time 1]	2.00 Secs

I/O Module Parameter (Port X)	Setting
P10 [R00 Sel]	Port 0, P935 [Drive Status 1], Bit 16 "Running"

IMPORTANT The mechanical brake opens when the drive is running.

2. Run crane with the crane control unit and verify that the direction is correct.

   If crane direction is not correct, change motor direction.

Drive Parameter	Setting
P40 [Mtr Options Cfg]	Bit 4 "Mtr Lead Rev" = 1 (Reversed)

   Run crane with the crane control unit and verify that the direction is now correct.

   Move crane hook to a position that allows sufficient travel in both directions.

Verify Encoder Direction

1. If a Dual Incremental-Encoder option module (20-750-DENC-1) is used, and only one encoder is connected, disable the encoder loss fault of the unused channel.

Drive Parameter	Setting
P132 [Aux Vel Fdbk Sel]	Encoder Port Number, Enc 0 FB (Selects Channel 0)

Encoder Module Parameter (Port X)	Setting
P13 [Enc 1 FB Lss Cfg]	0 "Ignore" (Disables Channel 1)
P2 [Enc 0 PPR]	Real pulses per revolution (For example 1024).

2. Run the crane upwards or downwards and monitor the sign (+ or –) of the output frequency on the HIM display or via software. Compare this sign to the sign of P134 [Aux Vel Feedback]. Both signals must have the same sign (both positive or both negative).

   If signals do not match, change the encoder direction setting.

Encoder Module Parameter (Port X)	Setting
P1 [Enc 0 Cfg]	Bit 5 "Direction" = 1 (Invert)

3. Run the crane upwards or downwards and check if the sign of both speeds matches.

Drive Parameter	Setting
P125 [Pri Vel Fdbk Sel]	Encoder Port Number, P1 [Dig In Sts]

   The encoder direction now matches the motor direction.

Rotate Tune

During a Rotate Tune routine, the motor runs for 20 seconds in the commanded direction. In Flux vector control, the Rotate Tune routine can be executed in a no load or lightly loaded condition such as the motor connected to a gearbox, cable drum, or cable and hook.

IMPORTANT Ensure that the Rotate Tune routine can be stopped if an end travel condition is likely to occur.

If the motor is connected to a load, determine whether there is enough travel distance for the Rotate Tune sequence to complete. If necessary, run the crane hook to top or bottom for more travel distance in the opposite direction.

If the Rotate Tune routine fails due to a motor load, rerun the Static Tune routine and skip this routine.

1. Enter Rotate Tune parameter settings.

Drive Parameter	Setting
P70 [Autotune]	3 "Rotate Tune"
P520 [Max Fwd Speed]	Forward speed limit that is used during Autotune. 70 % P27 [Motor NP Hertz] minimum.
P521 [Max Rev Speed]	Reverse speed limit that is used during Autotune. 70 % P27 [Motor NP Hertz] minimum.
Encoder Module Parameter (Port X)	**Setting**
P10 [R00 Sel]	Port 0, P935 [Drive Status 1], Bit 1 "Active"

2. Press the Start button on the Control Bar.

   When the Rotate Tune routine is complete, P70 [Autotune] changes to 0 "Ready."

   Check tuning results in P73 [IR Voltage Drop], P74 Ixo Voltage Drop], and P75 [Flux Current Ref].

Inertia Tune

The Inertia Tune routine measures the time to accelerate the system (with load) by using P71 [Autotune Torque] to the nominal speed. The test speed can be limited by reducing P520 [Max Fwd Speed] and P521 [Max Rev Speed]. The fastest test is achieved with P71 [Autotune Torque] set to a high value and P520 [Max Fwd Speed] and P521 [Max Rev Speed] set to a low value.

Because loads vary in crane applications, the result of an Inertia Tune is more or less irrelevant as it is for one condition only.

Step 8 outlines manually setting tuning values.

IMPORTANT Ensure that the Inertia Tune routine can be stopped if an end travel condition is likely to occur.

1. Enter Inertia Tune parameter settings.

Drive Parameter	Setting
P70 [Autotune]	4 "Inertia Tune"

2. Press the Start button on the Control Bar.

   When the Rotate Tune routine is complete, P70 [Autotune] changes to 0 "Ready."

   Check tuning results in P76 [Total Inertia].

   When using an encoder, the drive and motor can hold zero speed with full load even with an opened mechanical brake.

3. Set minimum speed.

Drive Parameter	Setting
P522 [Min Fwd Speed]	0.00
P523 [Min Rev Speed]	0.00

4. Set maximum speed limits.

Drive Parameter	Setting
P520 [Max Fwd Speed]	Forward speed limit that is used during normal operation. Not more than the motor nominal frequency.
P521 [Max Rev Speed]	Reverse speed limit that is used during normal operation. Not more than the motor nominal frequency.

5. Set digital input functions.

Speed Select Inputs

Drive Parameter	Setting
P173…175 [DI Speed Sel *n*]	I/O Port Number, P1 [Dig In Sts], Bit *n*

Clear Fault Input

Drive Parameter	Setting
P156 [DI Clear Fault]	I/O Port Number, P1 [Dig In Sts], Bit *n*

6. Set speed reference.

Program preset speeds according to Speed Select inputs that are used.

Input Status (1 = Input Actuated)			Auto Reference Source
DI Speed Sel 2	DI Speed Sel 1	DI Speed Sel 0	
0	0	0	Reference A
0	0	1	Reference A
0	1	0	Reference B
0	1	1	Preset Speed 3
1	0	0	Preset Speed 4
1	0	1	Preset Speed 5
1	1	0	Preset Speed 6
1	1	1	Preset Speed 7

I/O Module Parameter (Port X)	Setting
P10 [R00 Sel]	Port 0, P935 [Drive Status 1], Bit 16 “Running”

7. Run crane with crane control unit.

Verify speed references by checking P930 [Speed Ref Source].

8. Set speed loop tuning.

Drive Parameter	Setting
P636 [Speed Reg BW]	20 R/S Defines the reactivity of the speed regulator. This parameter is used to calculate Kp and Ki gains.
P76 [Total Inertia]	1.5 Secs This value can be increased or decreased depending on Speed regulator response.

P645 [Speed Reg Kp] = P636 [Speed Reg BW] x P76 [Total Inertia] = BW x J (Inertia)

Torque Prove

Carefully perform the following steps in the order presented.

1. Enter Torque Prove parameter settings.

I/O Module Parameter (Port X)	Setting
P10 [RO0 Sel]	0.00 (Disabled)
P6 [Dig Out Invert]	Bit 0 "Relay Out 0" = 1 (Output Inverted)
P10 [RO0 Sel]	Port 0, P1103 [Trq Prove Status], Bit 4 "Brake Set" = 1

Drive Parameter	Setting
P1100 [Trq Prove Cfg]	Bit 0 "TP Enable" = 1

   Once Torque Prove is activated, the drive is in alarm state.

2. Select the source of position feedback.

Drive Parameter	Setting
P135 [Psn Fdbk Sel]	Encoder Port Number, P4 [Enc 0 FB]

3. Set the time to decrease motor torque during Brake Slip test.

Drive Parameter	Setting
P1104 [Trq Lmt SlewRate]	10.000 Secs (Default)

4. Set speed deviation.

Drive Parameter	Setting
P1105 [Speed Dev Band]	Start with default Hz or RPM.

   Increase this setting if the drive faults on F20 [TorqPrv Spd Band].

5. Set speed deviation level.

Drive Parameter	Setting
P1106 [SpdBand Intgrtr]	0.060 Secs (Default)

   Increase this setting if the drive faults on F20 [TorqPrv Spd Band].

6. Set brake release time.

Drive Parameter	Setting
P1107 [Brk Release Time]	0.100 Secs (Default)

   Increase or decrease this setting depending on the time that is required to open the brake.

7. Set brake set time.

Drive Parameter	Setting
P1108 [Brk Set Time]	0.100 Secs (Default)

   Increase or decrease this setting depending on the time that is required to close the brake.

8. Set allowable brake slip.

Drive Parameter	Setting
P1109 [Brk Alarm Travel]	1.00 (Default)

   Sets the number of motor revolutions the motor is allowed to lower the load when a brake slip has been detected.

9. Set brake slip definition.

Drive Parameter	Setting
P1110 [Brk Slip Count]	250.00 (Default)

Sets the number of encoder counts to define a brake slippage condition. Counts = Encoder PPR x 4

10. Set brake float tolerance.

Drive Parameter	Setting
P1111 [Float Tolerance]	Use default Hz or RPM.

Sets the level at which the float timer starts counting.

11. Set brake float time.

Drive Parameter	Setting
P1113 [ZeroSpdFloatTime]	5.000 Secs (Default)

Sets the time to maintain zero speed with brake open when the run command has been released.

Setup Complete

The drive is now set up and Torque Prove for the mechanical brake control is activated. The load can now be applied.

DriveObserver™ can be used to optimize the speed loop tuning. Use a 30 second time scaling on the X-axis

12. Use DriveObserver to configure the following traces.

Drive Parameter	Setting
P3 [Mtr Vel Fdbk]	Scaled to minimum and maximum speed limits.
P594 [Ramped Spd Ref]	Scaled to minimum and maximum speed limits.
P7 [Output Current]	Scaled to current limit value.
P11 [DC Bus Volts]	Default scaling.
P5 [Torque Cur Fdbk] (Optional)	Default scaling.

Run the crane up and down under full load. If necessary, adjust acceleration and deceleration rates.

Troubleshooting

The following faults commonly occur during drive commissioning.

F4 “Undervoltage”

- If the mains supply is still present, reduce the undervoltage level at P461 [UnderVltg Level].

F5 “Overvoltage”

- Monitor the DC Bus voltage while operating the crane. When lowering the load, limit the DC bus voltage to 750V DC.
- Verify that the external resistor is correctly connected / wired
- Verify that the parameter settings as stated in Point 1.
- Monitor bit 20 DB active of P935 [Drive Status 1]. This bit comes on when dynamic braking is active.

F20 “TrqProve Spd Band” (Speed deviation fault)

- This fault is only active when TorqProve is enabled.
- Speed loop tuning not correct. Increase P636 [Speed Reg BW] or P76 [Total Inertia]. If values are too high, the regulator becomes unstable.
- Verify P3 [Mtr Vel Fdbk] follows P594 [Ramped Spd Ref] as best as possible.
- Drive is going into current limit. Drive is undersized or acceleration / deceleration are set too fast.
- Brake is not opening. Check for faulty brake rectifier.

For more fault information, see Chapter 6.

Crane Setup - Encoderless

These setup instructions assume the following.

- Drive and motor size have been carefully selected
- External brake resistor has been properly sized
- The drive is at factory defaults.
  If not, unplug the output relay terminal block and issue a reset to factory defaults for the HOST and all PORTS. Plug terminal block back in.
- Programming is done via DriveExecutive or DriveExplorer
- Crane control is done via Run forward / Run Reverse inputs
- Mechanical brake control is wired to Output Relay 0



ATTENTION: Loss of control in suspended load applications can cause personal injury and/or equipment damage. The drive or a mechanical brake must always control the loads. Parameters 1100…1113 are designed for lifting/torque prove applications. It is the responsibility of the engineer and/or end user to configure drive parameters, test any lifting functionality and meet safety requirements in accordance with all applicable codes and standards.

Set Up the Drive

1. Adjust parameter settings and enter nameplate data.

Parameter	Setting
Brake Details	
P370 [Stop Mode A]	1 "Ramp"
P372 [Bus Reg Mode A]	2 "Dyn Brake" (Dynamic Braking)
P382 [DB Resistor Type]	1 "External"
P383 [DB Ext Ohms]	Total Ohm value of external resistor.
P384 [DB Ext Watts]	Total real watt rating of external resistor.
P385 [DB ExtPulseWatts]	Maximum value for properly sized resistor.
P426 [Regen Power Lmt]	–800 % (Minimum Value)
Motor Nameplate Data	
P25 [Motor NP Volts]	Motor nameplate voltage.
P26 [Motor NP Amps]	Motor nameplate current.
P27 [Motor NP Hertz]	Motor nameplate frequency.
P28 [Motor NP RPM]	Motor nameplate speed.
P29 [Mtr NP Pwr Units]	0 "HP" or 1 "kW"
P30 [Motor NP Power]	Motor nameplate power rating.
P31 [Motor Poles]	Number of motor poles.
Motor Control	
P35 [Motor Ctrl Mode]	3 "Induction FV"
Motor Slip	
P621 [Slip RPM at FLA]	Synchronous Speed – P28 [Motor NP RPM] Example: 6 pole – 980 RPM motor Synchronous Speed = (NP frequency x 60 Secs)/pole pairs (50 Hz x 60 Secs) / 3 = 1000 RPM Slip = Synchronous Speed – Motor NP RPM = 1000 –980 = 20 RPM (enter 20 in P621)
Drive Duty Rating	
P306 [Duty Rating]	1 "Heavy Duty"
Overload Hertz	
P414 [Mtr OL Hertz]	0.00 (Ensures that no current derating is applied.)
Autotune Torque	
P71 [Autotune Torque]	100.00 % (Used during rotate tuning and inertia tuning.)
Protection	
P420 [Drive OL Mode]	1 "Reduce PWM"
P422 [Current Limit 1]	200 % of P26 [Motor NP Amps]
P444 [OutPhaseLossActn]	3 "FltCoastStop"

Motor Tune Routines

Static Tune
This routine measures motor characteristics with the brake set (brake closed).

Rotate Tune
This routine gives better results if connected equipment allows. This routine requires the mechanical brake to open and the motor be allowed to run at minimum of 70 % of nominal speed.

Inertia Tune
This routine measures the time to accelerate the system to the nominal speed.

Static Tune

During a Static Tune, the mechanical brake remains set.

1. Enter Static Tune parameter settings.

Drive Parameter	Setting
P70 [Autotune]	2 "Static Tune"
I/O Module Parameter (Port X)	**Setting**
P10 [R00 Sel]	0.00 "Disabled"

2. To open the Control Bar, click the Controls icon  .

3. Press the Start button on the Control Bar.

   When the Static Tune routine is complete, P70 [Autotune] changes to 0 "Ready."

Verify Drive Direction

1. Perform a Direction Test to verify proper direction of crane.

I/O Module Parameter (Port *n*)	Setting
P164 [DI Run Forward]	Port Number, P1 [Dig In Sts], Bit *n* (Run Fwd Input)
P165 [DI Run Reverse]	Port Number, P1 [Dig In Sts], Bit *n* (Run Rev Input)

IMPORTANT The crane can be started via the crane control unit.

Drive Parameter	Setting
P545 [Spd Ref A Sel]	Port 0, P571 [Preset Speed 1]
P571 [Preset Speed 1]	15 Hz (Set to low speed for direction test.)
P535 [Accel Time 1]	2.00 Secs
P537 [Decel Time 1]	2.00 Secs
I/O Module Parameter (Port X)	**Setting**
P10 [R00 Sel]	Port 0, P935 [Drive Status 1], Bit 16 "Running"

IMPORTANT The mechanical brake opens when the drive is running.

2. Run crane with the crane control unit and verify that the direction is correct.

   If crane direction is not correct, change motor direction.

Drive Parameter	Setting
P40 [Mtr Options Cfg]	Bit 4 "Mtr Lead Rev" = 1 (Reversed)

   Run crane with the crane control unit and verify that the direction is now correct.

   Move crane hook to a position that allows sufficient travel in both directions.

Rotate Tune

During a Rotate Tune routine, the motor runs for 20 seconds in the commanded direction. The Rotate Tune routine must be executed in a no load or lightly loaded condition such as the motor connected to a gearbox, cable drum, or cable and hook.

IMPORTANT Ensure that the Rotate Tune routine can be stopped if an end travel condition is likely to occur.

If the motor is connected to a load, determine whether there is enough travel distance for the Rotate Tune sequence to complete. If necessary, run the crane hook to top or bottom for more travel distance in the opposite direction.

If the Rotate Tune routine fails due to motor load, rerun the Static Tune routine and skip this routine.

1. Enter Rotate Tune parameter settings.

Drive Parameter	Setting
P70 [Autotune]	3 “Rotate Tune”
P520 [Max Fwd Speed]	Forward speed limit that is used during Autotune. 70 % P27 [Motor NP Hertz] minimum.
P521 [Max Rev Speed]	Reverse speed limit that is used during Autotune. 70 % P27 [Motor NP Hertz] minimum.
Encoder Module Parameter (Port X)	**Setting**
P10 [R00 Sel]	Port 0, P935 [Drive Status 1], Bit 1 “Active”

2. Press the Start button on the Control Bar.

   When the Rotate Tune routine is complete, P70 [Autotune] changes to 0 “Ready.”

   Check tuning results in P73 [IR Voltage Drop], P74 Ixo Voltage Drop], and P75 [Flux Current Ref].

Inertia Tune

The Inertia Tune routine measures the time to accelerate the system (with load) by using P71 [Autotune Torque] to the nominal speed. The test speed can be limited by reducing P520 [Max Fwd Speed] and P521 [Max Rev Speed]. The fastest test is achieved with P71 [Autotune Torque] set to a high value and P520 [Max Fwd Speed] and P521 [Max Rev Speed] set to a low value.

Because loads vary in crane applications, the result of an Inertia Tune is more or less irrelevant as it is for one condition only.

Step 8 outlines manually setting tuning values.

IMPORTANT Ensure that the Inertia Tune routine can be stopped if an end travel condition is likely to occur.

1. Enter Inertia Tune parameter settings.

Drive Parameter	Setting
P70 [Autotune]	4 "Inertia Tune"

2. Press the Start button on the Control Bar.

   When the Rotate Tune routine is complete, P70 [Autotune] changes to 0 "Ready."

   Check tuning results in P76 [Total Inertia].

3. Set minimum speed.

Drive Parameter	Setting
P522 [Min Fwd Speed]	2 x Slip Frequency of Motor. (From motor nameplate.)
P523 [Min Rev Speed]	2 x Slip Frequency of Motor. (From motor nameplate.)

4. Set maximum speed limits.

Drive Parameter	Setting
P520 [Max Fwd Speed]	Forward speed limit that is used during normal operation. Not more than the motor nominal frequency.
P521 [Max Rev Speed]	Reverse speed limit that is used during normal operation. Not more than the motor nominal frequency.

5. Set digital input functions.

   Speed Select Inputs

Drive Parameter	Setting
P173…175 [DI Speed Sel *n*]	I/O Port Number, P1 [Dig In Sts], Bit *n*

   Clear Fault Input

Drive Parameter	Setting
P156 [DI Clear Fault]	I/O Port Number, P1 [Dig In Sts], Bit *n*

6. Set speed reference.

   Program preset speeds according to Speed Select inputs that are used.

Input Status (1 = Input Actuated)			Auto Reference Source
DI Speed Sel 2	DI Speed Sel 1	DI Speed Sel 0	
0	0	0	Reference A
0	0	1	Reference A
0	1	0	Reference B
0	1	1	Preset Speed 3
1	0	0	Preset Speed 4
1	0	1	Preset Speed 5
1	1	0	Preset Speed 6
1	1	1	Preset Speed 7

I/O Module Parameter (Port X)	Setting
P10 [R00 Sel]	Port 0, P935 [Drive Status 1], Bit 16 “Running”

7. Run crane with crane control unit.

   Verify speed references by checking P930 [Speed Ref Source].

8. Set speed loop tuning.

Drive Parameter	Setting
P636 [Speed Reg BW]	20 R/S Defines the reactivity of the speed regulator. This parameter is used to calculate Kp and Ki gains.
P76 [Total Inertia]	1.5 Secs This value can be increased or decreased depending on Speed regulator response.

P645 [Speed Reg Kp] = P636 [Speed Reg BW] x P76 [Total Inertia] = BW x J (Inertia)

Torque Prove

Carefully perform the following steps in the order presented.

1. Enter Torque Prove parameter settings.

I/O Module Parameter (Port X)	Setting
P10 [RO0 Sel]	0.00 (Disabled)
P6 [Dig Out Invert]	Bit 0 "Relay Out 0" = 1 (Output Inverted)
P10 [RO0 Sel]	Port 0, P1103 [Trq Prove Status], Bit 4 "Brake Set" = 1

Drive Parameter	Setting
P1100 [Trq Prove Cfg]	Bit 0 "TP Enable" = 1 Bit 1 "Encoderless" = 1 Bit 5 "BrkSlipEncls" = 1

IMPORTANT After Torque Prove is activated, the drive is in an alarm state as described on page 372. Carefully read the Attention statement and acknowledge it by setting the required parameter.

2. Set speed deviation.

Drive Parameter	Setting
P1105 [Speed Dev Band]	10 Hz

This setting can be lowered once the system has been tuned. The lower this value, the faster the protection.

3. Set speed deviation level.

Drive Parameter	Setting
P1106 [SpdBand Intgrtr]	0.200 Secs (Default)

This setting can be lowered once the system has been tuned. The lower this value, the faster the protection.

4. Set brake float tolerance.

Drive Parameter	Setting
P1111 [Float Tolerance]	2...3 times Slip Frequency of Motor.

Sets the level where the mechanical brake sets in encoderless mode.

Setup Complete

The drive is now set up and Torque Prove for the mechanical brake control is activated. The load can now be applied.

DriveObserver can be used to optimize the speed loop tuning. Use a 30 second time scaling on the X-axis

5. Use DriveObserver to configure the following traces.

Drive Parameter	Setting
P3 [Mtr Vel Fdbk]	Scaled to minimum and maximum speed limits.
P594 [Ramped Spd Ref]	Scaled to minimum and maximum speed limits.
P7 [Output Current]	Scaled to current limit value.
P11 [DC Bus Volts]	Default scaling.
P5 [Torque Cur Fdbk] (Optional)	Default scaling.

   Run the crane up and down under full load. Adjust acceleration and deceleration rates if necessary.

Troubleshooting

The following faults commonly occur during drive commissioning.

F4 “Undervoltage”

- If the mains supply is still present, reduce the undervoltage level at P461 [UnderVltg Level].

F5 “Overvoltage”

- Monitor the DC Bus voltage while operating the crane. When lowering the load, limit the DC bus voltage to 750V DC.
- Verify that the external resistor is correctly connected / wired
- Verify that the parameter settings as stated in Point 1.
- Monitor bit 20 DB active of P935 [Drive Status 1]. This bit comes on when dynamic braking is active.

F20 “TrqProve Spd Band” (Speed deviation fault)

- This fault is only active when TorqProve is enabled.
- Speed loop tuning not correct. Increase P636 [Speed Reg BW] or P76 [Total Inertia]. If values are too high, the regulator becomes unstable.
- Verifty that P3 [Mtr Vel Fdbk] follows P594 [Ramped Spd Ref] as best as possible.
- Drive is going into current limit. Drive is undersized or acceleration / deceleration are set too fast.
- Brake is not opening. Check for faulty brake rectifier.

For more fault information, see Chapter 6.

Pump Off Function

Overview

The Pump Off function is used to change the speed of or stop the pump jack automatically, based on torque feedback from the motor. This function is useful for maximizing well production and reducing mechanical wear.

Configure P1187 [Pump Off Config] in one of two ways to detect a Pump Off.

- Down Stroke Torque method: Setting 0 “Automatic” or 1 “Position”
  The pump jack down stroke torque is based on a detected waveform.
- Cycle Torque method: Setting 2 “Cycle”
  The pump jack down stroke torque is based on a full pump stroke cycle.

Setup

To use the Pump Off feature, the drive must operate in flux vector (FV) control mode. This mode requires that you enter motor nameplate data and complete a motor autotune routine. Gearbox ratio and sheave size data are also required.

Pump off control can be set to use a torque baseline, which is created when the drive is first run or from a fixed set point. The fixed set point is useful if the drive cannot detect a signature waveform due to well conditions. The drive does not create a set point that is based on what could be a pump off condition.

The down stroke torque can change position on some wells due to slippage in the system. In these cases, the peaks and valleys of the torque waveform move enough that the position reconnect does not work properly. This slippage can be seen on the position test point in that the position continues to reset early. To work on these pumps, the torque waveform over one cycle is averaged.

Gather Motor and Pump Data

Complete the table with the motor nameplate and pump data listed.

Motor Data		
Motor Nameplate Volts		V
Motor Nameplate FLA		A
Motor Nameplate Hertz		Hz
Motor Nameplate RPM		RPM
Motor Nameplate Power		Hp
Motor Poles		Pole
Pump Data		
Gearbox Sheave Diameter		in.
Gearbox Ratio		:
Gearbox Rating		kin#
Motor Sheave Diameter		in.

Enter Motor Data

Enter the motor data from above and adjust parameter settings.

Parameter	Setting
Parameter Access Level	
P301 [Access Level]	2 “Expert”
Motor Nameplate Data	
P25 [Motor NP Volts]	Motor nameplate voltage.
P26 [Motor NP Amps]	Motor nameplate current.
P27 [Motor NP Hertz]	Motor nameplate frequency.
P28 [Motor NP RPM]	Motor nameplate speed.
P29 [Mtr NP Pwr Units]	0 “HP” or 1 “kW”
P30 [Motor NP Power]	Motor nameplate power rating.
P31 [Motor Poles]	Number of motor poles.
Motor Control	
P35 [Motor Ctrl Mode]	3 “Induction FV”

Run Motor Tune Routine

The drive can be tuned to the motor. Autotune routines can be accessed directly or through the Start Up menu.

When tuning, it is preferred that the motor is uncoupled from the pump jack and a Rotate Tune routine be performed. If this action is not possible, perform a Static Tune routine.



ATTENTION: Rotation of the motor in an undesired direction can occur during this procedure. To guard against possible injury and/or equipment damage, it is recommended ti disconnect the motor from the load before proceeding.

Access Autotune Directly

1. Verify that the motor is turning in the forward direction by jogging the motor. Face the motor shaft and verify clockwise rotation. If necessary, correct the direction of rotation by using one of the following methods.
   a. Swap any two motor leads. This method is recommended to help avoid confusion later.
   b. Change the motor direction by configuring drive firmware.

Drive Parameter	Setting
P40 [Mtr Options Cfg]	Bit 4 "Mtr Lead Rev" = 1 (Reversed)

2. Once direction is established, enter the Rotate Tune parameter setting.

Drive Parameter	Setting
P70 [Autotune]	3 "Rotate Tune"

3. Press Start and allow the drive to complete the Autotune routine.

When complete, the motor can now be coupled to the pump jack.

Access Autotune Through Start Up Menu

1. On the Human Interface Module (HIM), press the  (Folders) key to navigate to the Start Up tab.
2. Select General Startup and answer the questions when prompted.

When complete, the motor can be coupled to the pump jack.

Enter Pump Data

Enter pump data and adjust parameter settings.

Parameter	Setting
Pump Jack	
P1178 [Motor Sheave]	Diameter in inches.
P1179 [OilWell Pump Cfg]	1 "Pump Jack"
P1181 [Gearbox Limit]	Percent of P1182 [Gearbox Rating]
P1182 [Gearbox Rating]	Nameplate gearbox rating.
P1183 [Gearbox Ratio]	Nameplate gear ratio.
P1184 [Gearbox Sheave]	Diameter in inches.
Pump Off	
P1187 [Pump Off Config]	0 "Automatic" (Default)
P1189 [Pump Off Action]	Select preferred action.
P1190 [Pump Off Control]	0 "Disable" (Default)

Enter Desired Bus Regulation Data

The following parameter settings assume that a dynamic brake resistor is used.

Parameter	Setting
Brake Features	
P372 [Bus Reg Mode A]	2 "Dyn Brake" (1)
P382 [DB Resistor Type]	1 "External"
P383 [DB Ext Ohms]	Based on performance preference.
P384 [DB Ext Watts]	Based on performance preference.
P385 [DB ExtPulseWatts]	Based on performance preference.
Motor Overload	
P409 [Dec Inhibit Actn]	0 "Ignore"
Load Limits	
P426 [Regen Power Lmt]	Set to match the value that is calculated for P671 [Neg Torque Limit], see below this table.

(1) If no dynamic braking resistor is used, set P372 [Bus Reg Mode A] to 1 "Adjust Freq" (Default). Speed is sacrificed for bus regulation and P524 [Overspeed Limit] must be adjusted.



ATTENTION: The "adjust freq" portion of the bus regulator function is extremely useful for preventing nuisance overvoltage faults resulting from aggressive decelerations, overhauling loads, and eccentric loads. It forces the output frequency to be greater than commanded frequency while the drive's bus voltage is increasing towards levels that would otherwise cause a fault. However, it can also cause either of the following two conditions to occur.

1. Fast positive changes in input voltage (more than a 10% increase within 6 minutes) can cause uncommanded positive speed changes. However an "OverSpeed Limit" fault occurs if the speed reaches [Max Speed] + [Overspeed Limit]. If this condition is unacceptable, take action to 1) limit supply voltages within the specification of the drive and, 2) limit fast positive input voltage changes to less than 10%. If this operation is unacceptable and the necessary actions cannot be taken, the "adjust freq" portion of the bus regulator function must be disabled (see parameters 372 and 373).

2. Actual deceleration times can be longer than commanded deceleration times. However, a "Decel Inhibit" fault is generated if the drive stops decelerating altogether. If this condition is unacceptable, the "adjust freq" portion of the bus regulator must be disabled (see parameters 372 and 373). In addition, installing a properly sized dynamic brake resistor provides equal or better performance in most cases. Important: These faults are not instantaneous. Test results have shown that they can take between 2…12 seconds to occur.

The following positive and negative torque limits are calculated on powerup and entered by the drive.

- P670 [Pos Torque Limit] is calculated using the motor parameters.
- P671 [Neg Torque Limit] is calculated using the dynamic-brake resistor ohmic value and rated torque of the motor. If a dynamic brake resistor is not used, the default negative torque limit is used.

Change P426 [Regen Power Lmt] to match the value in P671 [Neg Torque Limit] to maximize dynamic brake performance.

Store Pump Cycle Torque

1. Verify the well is full.
2. Enter a command speed.
3. Start the Pump Jack from the HIM.
4. Set P1192 [Pump Cycle Store] to option 1 "Enable."

   If the Pump Off feature detects a pump jack torque-signature waveform, the waveform is stored and the parameter resets to 0 "Disabled."

   If this parameter does not reset to 0 "Disabled," set P1187 [Pump Off Config] to option 2 "Cycle." In Cycle mode, the entire cycle torque is used as the down-stroke torque used in the original pump off detection. There is no need to set the top of stroke in this mode.

Initialize Pump Stroke Position

1. Set P1193 [Set Top ofStroke] to option 1 "Enable."

   Use a Human Interface Module (HIM) to avoid any communication delays.
2. Press enter when you visually see the Horsehead at the top position. This action sets the stroke position to the stored pump cycle torque.
3. Stop the drive.
4. Configure DriveObserver with the following parameters.
   - P5 [Torque Cur Fdbk]
   - P972 [Testpoint Lval]
   - P1198 [Pct Cycle Torque]
   - P1200 [Pct Drop Torque]
   - P1201 [Stroke Pos Count]

Figure 80 - DriveObserver Settings

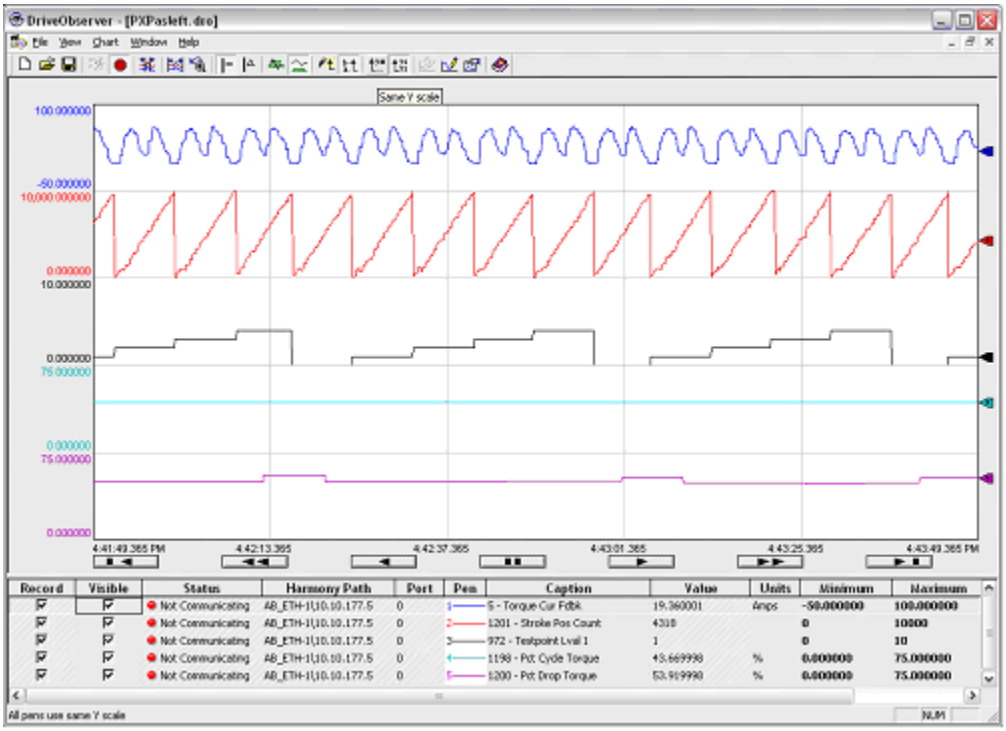

The value of P970 [Testpoint Sel 1] is referenced from P972 [Testpoint Lval 1].

5. Set P970 [Testpoint Sel 1] to a cycle count of 2043.

Initialize the Pump Off Feature

1. Set P1190 [Pump Off Control] to option 1 “Baseline Set.”
2. With the well full, start the drive.

   You can see waveforms similar to the waveforms in Figure 80. Monitor the Pump Jack and verify the Pump Off Action.

Fine-Tuning

P1195 [Pump Off Level], P1196 [Pump Off Speed], and P1197 [Pump Off Time] all contribute to the productivity of the well and must be adjusted. For more information read the parameter descriptions in Chapter 3.

Occasionally the position starts to drift relative to the torque signature. If drift occurs, set P1188 [Pump Off Setup] Bit 1 "Pos Offset" to 1. See Figure 81 for an example of what this drift would look like.

Figure 81 - Correcting Drift

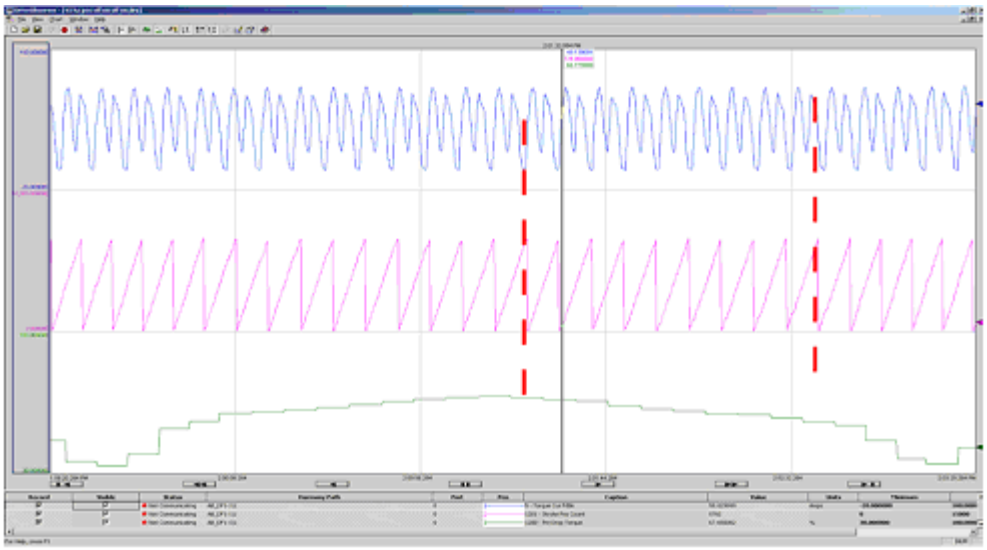

Notice how the position has drifted relative to the torque. This drift causes the incorrect part of the waveform to be averaged as the down stroke torque and results in a false pump off condition. The drift can be corrected by setting the position offset bits properly.

Sleep Mode

If P1189 [Pump Off Action] is set to 1 "Always Stop," 2 "Stop After 1," or 3 "Stop After 2," the Sleep Wake function must be configured. Set the following parameters.

Parameter	Setting
Start Features	
P350 [Sleep Wake Mode]	1 "Direct" (Enabled)
P351 [SleepWake RefSel]	1207 (Entered through the Numeric Edit tab.)
P355 [Wake Time]	Desired restart time (64800 seconds maximum).

Pump Off Control Outlines

Automatic /Position Baseline Set

The following steps are a general outline of how the initial Pump Off control is configured in the PowerFlex 753. The default configuration uses the down stroke torque with P1187 [Pump Off Config] set to 0 "Automatic" or 1 "Position" and P1190 [Pump Off Control] set to 1 "Baseline Set."

Set Base Speed Command

A commanded speed setting is chosen based on well characteristics, which produces the desired pump performance, most of the time. Pump off control is then configured to maintain acceptable pump performance when conditions temporarily change.

1. Pump off control requires the drive to be "At Speed." Check P935 [Drive Status 1] Bit 8 to verify this operating condition.
2. When P935 [Drive Status 1] Bit 8 "At Speed" = 1, the internal pump jack at speed bit is set and the current speed command is saved.
3. The next ten down stroke torques are sampled and summed.
4. The average of the down stroke torques is saved as the baseline for the current speed.
5. P1191 [Pump Off Status] Bit 6 "Pump Stable" = 1.

   When Bit 6 = 0, the drive is averaging a new baseline torque.
6. The pump jack is running under normal conditions.
7. While running under normal conditions, every fifth stroke is compared against the baseline to check for a pump off condition. The stroke count can be monitored in test point TP 2043.

   Change in Cycle Torque

   If the cycle torque sample is less than or greater than the fixed setpoint by the percentage set in P1195 [Pump Off Level], the following occurs:
   - P1191 [Pump Off Status] Bit 5 "PumpOff Alarm"= 1
   - The drive waits for a second sample

   If the second sample is also less than or greater than the fixed setpoint by the percentage set in P1195 [Pump Off Level], a Pump Off condition is detected.

   Run At Reduced Speed

   When a Pump Off condition exists, and P1189 [Pump Off Action] is set to 0 "Change Speed," the percentage set in P1196 [Pump Off Speed] lowers the commanded speed.

   Reduced Speed = Commanded Speed - (Commanded Speed x P1196)

8. When the reduced speed is reached, P935 [Drive Status 1] Bit 8 "At Speed" = 1, the next ten down stroke torques are sampled and summed.
9. The average of the down stroke torques is saved as the baseline for the new speed. P1191 [Pump Off Status] Bit 6 "Pump Stable" is reset.
10. The pump jack runs at the reduced speed for the length of time set in P1197 [Pump Off Time] then the pump jack resumes pumping at the base speed command. (Step 6 in this sequence.)

    If P1189 [Pump Off Action] is set to 3 "Stop After 2," go to Step 11.

    Whenever the operator changes the base speed command, the process starts over at Step 1 in this sequence. This action does not apply to speed changes that are triggered by P1189 [Pump Off Action] when a pump off condition is detected.
11. While running at the first reduced Pump Off Speed, every fifth stroke is compared to the new baseline for a pump off condition.

    If the down-stroke torque samples remain stable during the time set in P1197 [Pump Off Time], the following occurs:
    - Commanded speed returns to the original base speed
    - Down stroke torque samples are compared against the original baseline. (Step 6 in this sequence.)

    If two down stroke torque samples are less than or greater than the new baseline by the percentage set in P1195 [Pump Off Level], the following occurs:
    - The Pump Off condition persists
    - The percentage set in P1196 [Pump Off Speed] lowers the commanded speed a second time.
12. When the second reduced speed is reached, P935 [Drive Status 1] Bit 8 "At Speed" = 1, the next ten down stroke torques are sampled and summed.
13. The average of the down stroke torques is saved as the baseline for the second new speed. P1191 [Pump Off Status] Bit 6 "Pump Stable" is reset.
14. The pump jack runs at the second reduced speed for the length of time set in P1197 [Pump Off Time] and resumes pumping at the base speed command. (Step 6 in this sequence.)

15. While running at the second reduced Pump Off Speed, every fifth stroke is compared to the second new baseline for a persistent pump off condition.

    If the down-stroke torque samples remain stable during the time set in P1197 [Pump Off Time], the following occurs:

    - The commanded speed returns to the original base speed
    - The down stroke torque samples are compared against the original baseline. (Step 6 in this sequence.)

    If two down stroke samples are less than or greater than the second new baseline by the percentage set in P1195 [Pump Off Level], the following occurs:

    - The Pump Off condition persists
    - The drive stops for the length of time set in P353 [Sleep Time]

16. When P353 [Sleep Time] expires, the pump jack restarts and runs under normal conditions. (Step 6 in this sequence.)

When P1189 [Pump Off Action] is set to 2 "Stop After 1," the drive stops for the length of time set in P353 [Sleep Time] after one reduction of speed. (Step 11 in this sequence.)

When P1189 [Pump Off Action] is set to 1 "Always Stop," the drive stops for the length of time set in P353 [Sleep Time] at the first detection of a Pump Off condition. When P353 [Sleep Time] expires, the pump jack restarts and runs under normal conditions. (Step 6 in this sequence.)

When P1192 [Pump Cycle Store] does not change back to 0 "disable," the drive has not been able to detect a pump-jack torque signature waveform to use as a baseline. A fixed set point is required to run the well. See the next section.

Cycle Torque Data Fixed Setpoint

The following is a general outline of how the initial Pump Off control is configured in the PowerFlex 753. This configuration uses cycle torque data with P1187 [Pump Off Config] set to 2 "Cycle" and P1190 [Pump Off Control] set to 2 "Fixed Setpt."

1. Pump off control requires the drive to be "At Speed." Check P935 [Drive Status 1] Bit 8 to verify this operating condition.
2. When P935 [Drive Status 1] Bit 8 "At Speed" = 1, the internal pump jack at speed bit is set and the current speed command is saved. The At Speed bit is no longer scrutinized until the speed command is changed or the drive is stopped.

   The next three strokes are used to allow the pump to settle out.
3. P1191 [Pump Off Status] Bit 6 "Pump Stable" = 1.
4. The pump jack is running under normal conditions.

5. While running under normal conditions, every fifth stroke is compared against the baseline to check for a pump off condition.

   Change in Down Stroke Torque

   If the down-stroke torque sample is less than or greater than the baseline by the percentage set in P1195 [Pump Off Level], the following occurs:

   - P1191 [Pump Off Status] Bit 5 "PumpOff Alarm"= 1
   - The drive waits for a second sample

   If the second sample is also less than or greater than the baseline by the percentage set in P1195 [Pump Off Level], a Pump Off condition is detected.

   Execute Pump Off Action

   When a Pump Off condition exists, the drive follows the setting of P1189 [Pump Off Action]. The process starts over at Step 1 in this sequence and five strokes occur to allow the pump to settle out.

Whenever the operator changes the base speed command, the process starts over at Step 1 in this sequence.

When P1187 [Pump Off Config] is set to 2 "Cycle," the full stroke torque is used for pump off detection. A separate position counter is enabled, which uses the gear ratio and speed feedback to create a position. The gear ratio must be set correctly for this action to work.

- The position increments every 2 ms based on output frequency. The torque is added to a buffer and a counter increments.
- When the position counter reaches 10,000, the counter is reset to 0. The torque buffer is divided by the counter to create the average torque for the cycle.
- This torque is the full cycle torque and is then used as the down stroke torque was used in baseline set detection.

Table 24 - PowerFlex 753 Pump Off Test Points

Test Point	Description
TP 2031	Motor Torque in Pump Off
TP 2032	Top Of Stroke in Pump Off
TP 2033	POSITION1 in Pump Off
TP 2034	POSITION2 in Pump Off
TP 2035	POSITION3 in Pump Off
TP 2036	POSITION4 in Pump Off
TP 2037	POSITION5 in Pump Off
TP 2038	Active Position in Pump Off
TP 2039	Position State in Pump Off
TP 2040	Heavily filter torque for position detection in Pump Off
TP 2041	PumpJack control state in Pump Off

Test Point	Description
TP 2042	Avg Torque used for control state in Pump Off
TP 2043	Cycle count in Pump Off
TP 2044	Alarm count in Pump Off
TP 2045	Peak Torque in Pump Off
TP 2046	Offset Position in Pump Off
TP 2047	Simulator Torque Ref
TP 2048	Minimum Torque Position
TP 2049	Active Pump Off level
TP 2050	Down Stroke Torque Integrator
TP 2051	Full Stroke Position for cycle mode
TP 2052	Adjustment to Position indicator

Table 25 - Parameter List

No.	Display Name
1187	Pump Off Config
1188	Pump Off Setup
1189	Pump Off Action
1190	Pump Off Control
1191	Pump Off Status
1192	Pump Cycle Store
1193	Set Top ofStroke
1194	Torque Setpoint
1195	Pump Off Level
1196	Pump Off Speed
1197	Pump Off Time
1198	Pct Cycle Torque
1199	Pct Lift Torque
1200	Pct Drop Torque
1201	Stroke Pos Count
1202	Stroke Per Min
1203	Pump Off Count
1204	PumpOff SleepCnt
1205	Day Stroke Count

Predictive Maintenance with Logix

The PowerFlex 753 and 755 drives contain algorithms for Predictive Maintenance that are used to improve the "up-time" of machines, processes, and facilities. These algorithms monitor the lifespan of certain components. They can be used to alert personnel when the components are nearing the end of their lifespan so the components can be replaced before they fail.

There are algorithms for drive fans, relay contacts on digital outputs, motor bearings, motor lubrication, machine bearings, and machine lubrication. See the Predictive Maintenance group in the Protection folder starting on page 109 for more information.

Predictive Maintenance for Wall Mount Drives (Frames 1…7)

Predictive maintenance for wall mount drives is straightforward. Each predictive maintenance item has five key parameters: Total Life, Elapsed Life, Remaining Life, Event Level, and Event Action.

- [**Total Life**] is the total expected life of the component
- [**Elapsed Life**] is the amount of life that has been expended
- [**Remaining Life**] is the Total Life minus Elapsed Life
- [**Event Level**] is the amount of Elapsed Time (in percent of Total Life) when you want the drive to warn the user of an impending failure
- [**Event Action**] is the action set to take place when the drive reaches the Event Level. It can be set to the following options: Ignore, Alarm, Fault Minor, Fault Coast Stop, Fault Ramp Stop, or Fault Current Limit Stop.

The alarm and fault actions stop the drive or prevent it from starting. If using a controller and a network interface such as EtherNet/IP, the logic and notification can be handled at the controller level. Configure the [Event Action] parameter to "Ignore" and use the controller to monitor the [Remaining Life] parameter. When the [Remaining Life] parameter reaches the [Event Level] parameter value, the controller sends a message that alerts the user on the HMI (example, PanelView™ or FactoryTalk® View).

On wall mount drives, write explicit messages that read the [Remaining Life] parameter. Write the logic that compares the [Remaining Life] parameter to the [Event Level] parameter. The logic triggers a message when the [Event Level] parameter is reached.

Predictive Maintenance for Floor Mount Drives (Frames 8…10)

There can be multiple power structures in parallel on floor mount drives; and therefore, multiple sets of fans, which make the predictive maintenance more complicated than on wall mount drives.

To minimize the number of parameters, the parallel inverters, converters, and precharge units do not have separate [Total Life] and [Remaining Life] parameters. You must calculate the individual [Remaining Life] values in the controller.

A frame 10 drive has three power structures, and three sets of cabinet fans, heatsink fans, and internal stirring fans.

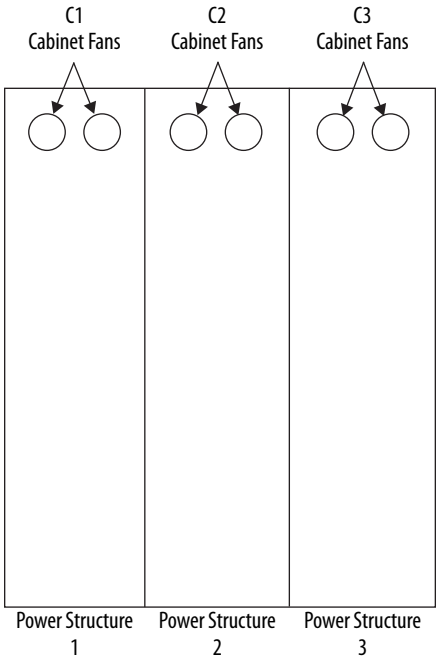

These parameters are available for the cabinet fans.

Table 26 - Cabinet Fan Parameters

Node	Parameter No.	Parameter Name	Description
0	482	CBFan TotalLife	Displays the expected lifespan for a cabinet fan.
0	483	CBFan ElpsdLife	Displays the greatest expended life of a cabinet fan.
0	484	CBFan RemainLife	Displays the difference between P482 [CBFan TotalLife] and P483 [CBFan ElpsdLife].
11	138	C1 CBFanElpsdLife	Displays the expended life of the fans on cabinet 1.
11	238	C2 CBFanElpsdLife	Displays the expended life of the fans on cabinet 2.
11	338	C3 CBFanElpsdLife	Displays the expended life of the fans on cabinet 3.

You must calculate the [Remaining Life] parameter values for the cabinet fans in each power structure. This calculation is required anytime the [Elapsed Life] parameter of one power structure differs from another. This difference can occur when one power structure has been replaced or serviced separately from the others.

Example Code

This example code calculates the [Remaining Life] value of the cabinet fan for the first power structure. For frames 9 and 10, use similar logic for the other cabinet fans. Use similar logic to calculate the [Remaining Life] of the heatsink fans and the internal stirring fans.

1. Use a timer instruction to set a sensible time interval for reading the data. See Figure 82.

Figure 82 - Timer Instruction

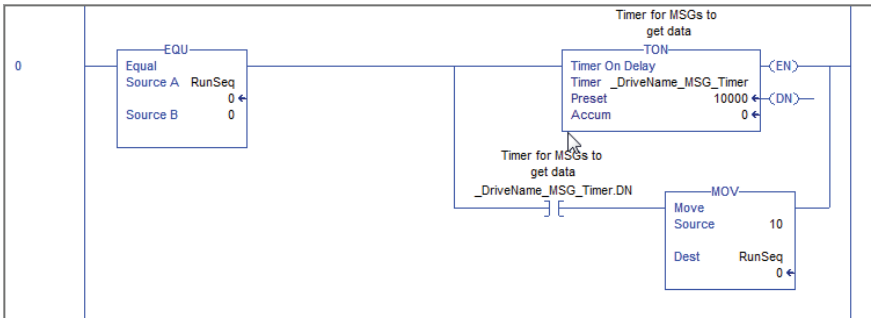

2. Use a message instruction to retrieve the Total Life value. See Figure 83.

Figure 83 - MSG Instruction

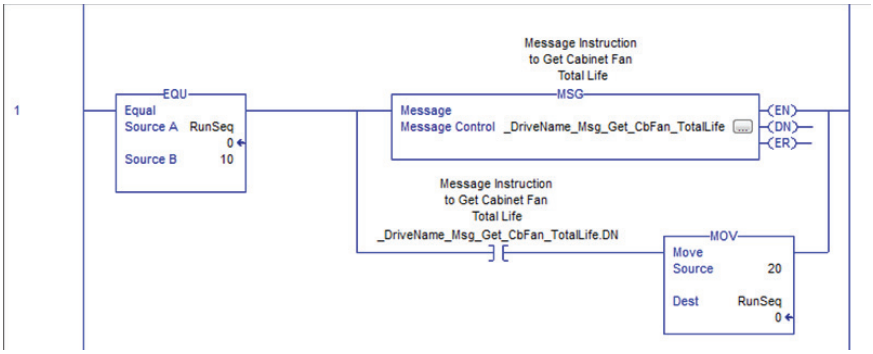

3. Configure the message instructions.
   a. Click the Configuration tab. See Figure 84.

Figure 84 - Message Configuration Screen - Configuration Tab

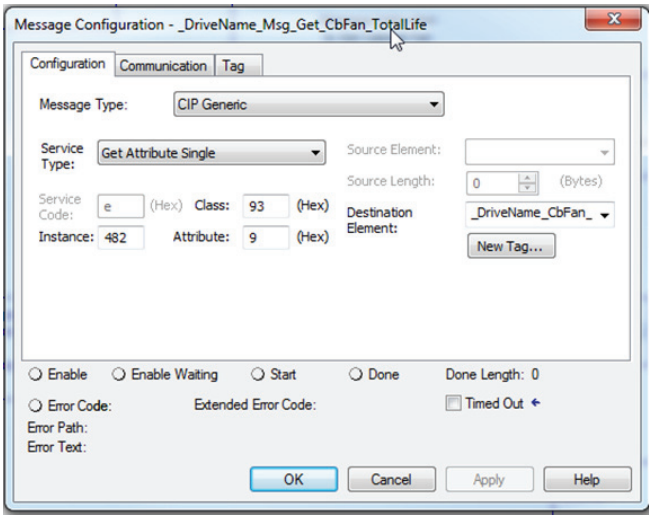

   b. In the Message Type field, click the down arrow to select CIP Generic.
   c. In the Service Type field, click the down arrow to select Get Attribute Single.
   d. In the Class field, enter 93 (hex); use the EtherNet/IP DPI Parameter Object.
   e. Set the Instance to 482. This field defines the parameter that you want to obtain.
   f. Set the Attribute to 9. This field defines that you want to retrieve the parameter value.
   g. Click the Communication tab. See Figure 85.

Figure 85 - Message Configuration Screen - Communications Tab

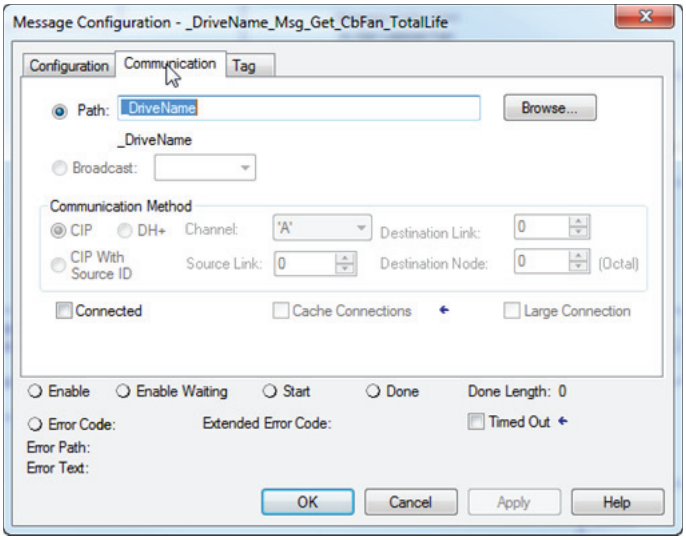

h. In the Path field, enter the drive name to configure the communication path of the message instruction to that drive.
In this case, the drive name in the Logix I/O tree is "_DriveName."

i. The value for Total Life returns in the double integer (DINT) data format.
The raw data = Hours x 100. Divide by 100 to get the Total Life in hours. The CPT block (see Figure 86) performs this division.

Figure 86 - Predictive Main Group Parameters (Port 0)

Port 0: Predictive Main Group Parameters

#	Parameter Name	Value	Units	Internal Value
469	PredMaint Sts	0000000000000000		0
470	PredMaintAmbTemp	50.00	DegC	0x42480000
471	PredMaint Rst En	Disable		0
472	PredMaint Reset	Ready		0
481	CbFan Derate	1.00		0x3F800000
482	CbFan TotalLife	17962.50	Hrs	1796250
483	CbFan ElpsdLife	0.00	Hrs	0
484	CbFan RemainLife	17962.50	Hrs	1796250
485	CbFan EventLevel	80.000	%	0x42A00000
486	CbFan EventActn	Ignore		0
488	HSFan Derate	1.00		0x3F800000
489	HSFan TotalLife	23949.00	Hrs	2394900
490	HSFan ElpsdLife	0.33	Hrs	33
491	HSFan RemainLife	23948.67	Hrs	2394867
492	HSFan EventLevel	80.000	%	0x42A00000
493	HSFan EventActn	Ignore		0
495	InFan Derate	1.00		0x3F800000
496	InFan TotalLife	30238.50	Hrs	3023850
497	InFan ElpsdLife	4612.96	Hrs	461296
498	InFan RemainLife	25625.54	Hrs	2562554
499	InFan EventLevel	80.000	%	0x42A00000
500	InFan EventActn	Ignore		0

4. Use a message instruction to retrieve the [Elapsed Life] value for the cabinet fan from converter 1. [Elapsed Life] data returns with a floating point (Real) data format. See Figure 87.

Figure 87 - Message Instruction for Elapsed Life Parameter

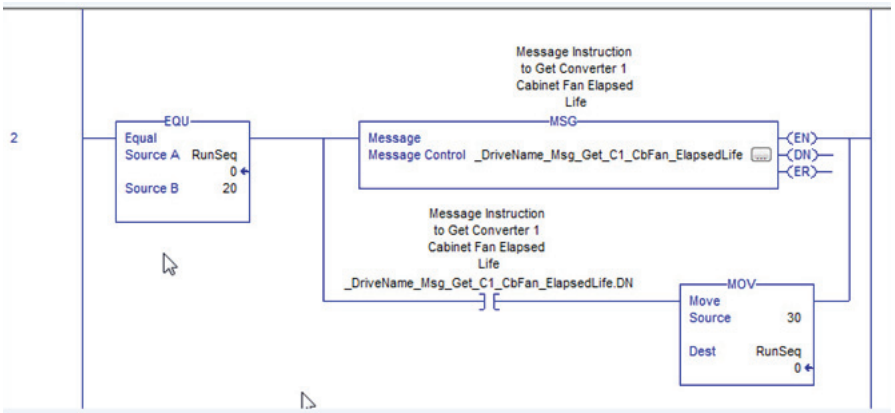

5. Configure the message instructions.
   a. Click the Configuration tab. See Figure 88.

Figure 88 - Message Configuration Screen - Configuration Tab

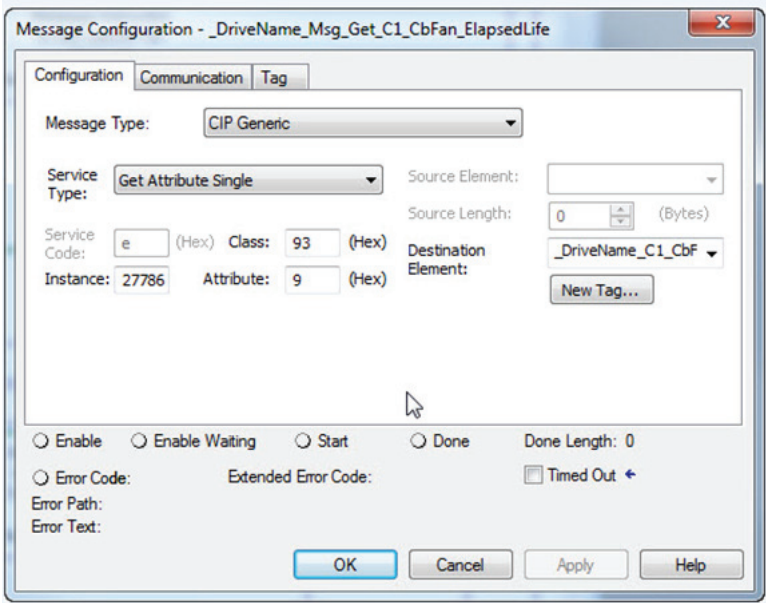

   b. In the Message Type field, click the down arrow to select CIP Generic.
   c. In the Service Type field, click the down arrow to select Get Attribute Single.
   d. In the Class field, enter 93 (hex); use the EtherNet/IP DPI Parameter Object.
   e. Set the Instance to 27786. This field defines the parameter that you want to obtain.
      The Instance is calculated by adding an offset of 27648 (dec) (as determined by the PowerFlex 750 Ethernet Communications Manual) to the converter 1 [C1 CBFanElpsdLife] parameter number (P138).
      27648 (offset) 138 (parameter number) = 27786
   f. Set the Attribute to 9. This field defines that you want to retrieve the parameter value.

g. Click the Communication tab. See Figure 89.

Figure 89 - Message Configuration Screen - Communication Tab

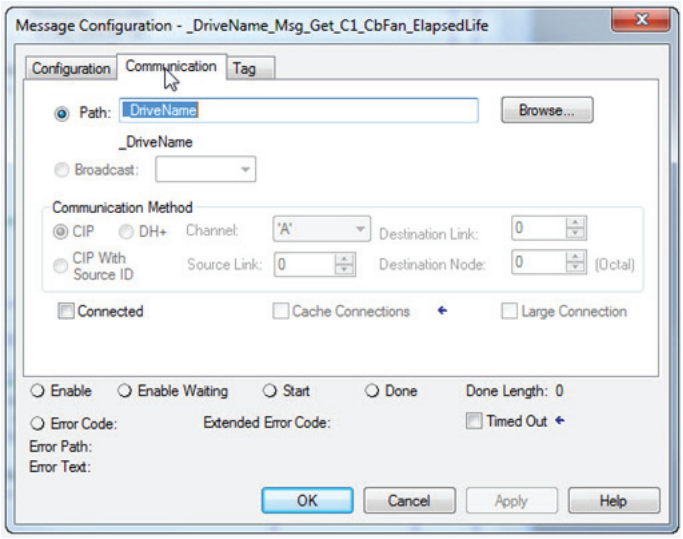

h. In the Path field, enter the drive name to configure the communication path of the message instruction to that drive.
In this case, the drive name in the Logix I/O tree is "_DriveName."

i. The [Elapsed Life] data returns with a floating point (Real) data format. The raw data is already in hours. See Figure 90.

Figure 90 - Predictive Main Group Parameters (Port 11)



6. To calculate the [Remaining Life] parameter, use a Compute (CPT) instruction with a subtraction expression. See Figure 91.

Figure 91 - Compute (CPT) Instructions

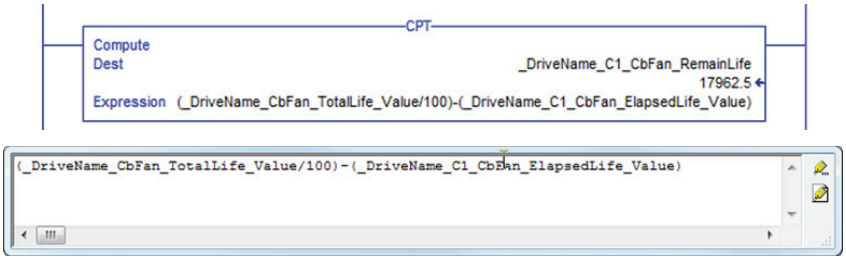

Using DeviceLogix

Introduction

DeviceLogix™ (DLX) is an embedded component that is located in Port 14 of PowerFlex® 750-Series drives. It is used to control outputs and manage status information locally within the drive. It can function stand-alone or complimentary to supervisory control.

IMPORTANT The Human Interface Module (HIM) CopyCat function does not work with the following firmware versions.

- PowerFlex 753 firmware version 1.005
- PowerFlex 755 firmware versions 1.009 or 1.010.

DeviceLogix programming for PowerFlex 750-Series drives is accomplished through a DeviceLogix Editor component ( icon), which is incorporated in the following versions of drive software:

Drive Software Tool	PowerFlex 755 v1.xx	PowerFlex 753 v1.xx, v5.xx PowerFlex 755 v2.xx…v5.xx	PowerFlex 753 v6.xx…v7.xx PowerFlex 755 v6.xx…v7.xx
DriveExplorer	v6.0**1** (and higher)	v6.0**2** (and higher)	v6.0**4** (and higher)
DriveTools™ SP / DriveExecutive	v5.0**1** (and higher)	v5.0**2** (and higher)	v5.0**5** (and higher)
DeviceLogix 5000 Drive Add-On Profiles	v2.0**1** (and higher)	v2.0**2** (and higher)	v4.0**2** (and higher)
Connected Components Workbench	v1.0**2** (and higher)	v1.0**2** (and higher)	v1.0**2** (and higher)

Only the drive software tools that are listed here can be used to program the DeviceLogix component in PowerFlex 750-Series drives. Other DeviceLogix Editors, such as RSNetWorx™ for DeviceNet, cannot be used.

IMPORTANT DeviceLogix projects that are created with PowerFlex 755 firmware versions 1.009 or 1.010 do not work with firmware version 2.002 or greater. These projects must be opened and adjusted in an editor (for example DriveExplorer™ or DriveExecutive™ software) before being downloaded to the drive.

Note the following feature differences between the drive firmware releases:

	PowerFlex 755 v1.xx	**PowerFlex 753 v1.xx** **PowerFlex 755 v2.xx**
DeviceLogix Library	Version 3	Version 4
Maximum number of function blocks	90	225
Program update time per number of blocks used	5 ms (fixed): 1…45 blocks 10 ms (fixed): 46…90 blocks	5 ms (fixed): 1…45 blocks 10 ms (fixed): 46…90 blocks 15 ms (fixed): 91…135 blocks 20 ms (fixed): 136…180 blocks 25 ms (fixed): 181…225 blocks

Version 3 of the DeviceLogix library introduced the following new features:

- Analog instructions (compute, math, compare, and so forth)
- Multiple I/O enable line object support
- Cut and Paste capability
- Screen format retention
- Online Help / Bit tool tip

Version 4 of the DeviceLogix library added the following new features:

- Macro Block instruction – the user programs a custom-function block element that contains other function blocks to perform specific tasks
- PID instruction

Version 5 of the DeviceLogix library added the following new features:

- User-defined tags for function block and ladder logic
- MOV and RESET ladder instructions
- Multiple Boolean outputs and inputs for selected instructions
- Function Block diagram I/O selection improvements
- Improved process-order assignment algorithm

Note: PowerFlex 755 v1.xxx drives can be flash updated to v2.xxx to take advantage of the new features in the Version 4 release of the DeviceLogix library and the increased number of function blocks.

The PowerFlex 750-Series DeviceLogix can provide basic logic capability for applications that can allow a 5...25 ms scan time depending on program size, plus the time it takes to update the I/O. It can be used in both networked and stand-alone environments. It can also operate autonomous of the drive. For example, it can continue executing if the drive is faulted, or disconnected from AC input power (requires PowerFlex 750-Series 24V DC auxiliary power supply option, catalog number 20-750-APS).

There is no data retention in DeviceLogix during a power cycle. Timer and counter-accumulators, calculation results, latched bits, and so forth, are cleared.

Parameters

See page 249 Embedded DeviceLogix parameter descriptions.

Function Block Elements

The following function block elements are available:

Bit and Analog I/O[1]	
Process	ALM TDG PID
Filter	LPF
Select/Limit	SEL HLL
Statistical	MAVE
Timer/Counter	TONR TOFR PULR CTU CTUD
Compare	MEQ EQU NEQ LES GRT LEQ GEQ
Compute/Math	ADD SUB MUL DIV MOD SQR NEG ABS XPY
Move/Logical	BAND BOR BXOR BNOT BNAND BNOR BXNOR SETD RSTD
Macro Block	

[1] Bit and Analog I/O do not count against the Function Block total. All other elements count, with each instance equal to one Function Block.

The DeviceLogix Editor provides a graphical interface, within which you can configure Function Blocks and provide local control in the drive. DeviceLogix Editor navigation and programming basics is not covered in this manual. See the DeviceLogix System User Manual, publication RA-UM003 for more information.

Macro Blocks 

You can create up to three Macro Blocks, and each can be used 10 times. The selections are empty until you create a Macro Block. You can also create the icon text that is associated with each Macro Block.

Bit and Analog I/O Points



The DeviceLogix controller in Port 14 uses (48) bit inputs, (48) bit outputs, (24) analog inputs, and (17) analog outputs to interact with the other ports in the drive (both drive and peripheral parameters).

Bit Inputs 

Available bit inputs to the DeviceLogix program include:

Bit Inputs	Description
(16) Hardware Boolean Inputs • DIP1 to DIP 16	These inputs correlate with DeviceLogix Port 14 parameters P33 [DLX DIP 01] to P48 [DLX DIP 16]
(32) Network Boolean Inputs • Ready, Active, Alarm, Faulted, and so forth.	These inputs correlate with the DeviceLogix Logic Status word for the drive. See page 247 for details on the Logic Status word bits.

Bit inputs are used to connect to real-world input devices (push buttons, photoeyes, and so forth) that are wired to an I/O option module in the drive, monitor drive status, or to read a bit in a bit-enumerated parameter.

Bit Outputs 

Available bit outputs from the DeviceLogix program include:

Bit Outputs	Description
(16) Hardware Boolean Outputs • DOP1 to DOP 16	These outputs correlate with the bits in DeviceLogix Port 14 parameter P51 [DLX DigOut Sts2]
(32) Network Boolean Outputs • Stop, Start, Jog1, Clear Faults, and so forth.	These outputs correlate with the DeviceLogix Logic Command word for the drive. See page 247 for details on the Logic Command word bits. These bits can also be monitored in DeviceLogix Port 14 parameter P50 [DLX DigOut Sts].

Bit Outputs are used to connect to real-world output devices (pilot lights, relays, and so forth) that are wired to an I/O option module in the drive, to control the drive directly via Logic Command bits, or to write a bit in a bit-enumerated parameter.

Analog Inputs 

Available analog inputs to the DeviceLogix program include:

Analog Inputs	Description
(12) Hardware Analog Inputs • DLX Real InSP1 to DLX Real InSP8 (Real) • DLX DINT InSP1 to DLX DINT InSP4 (DINT)	Scratchpad registers for DLX program input use.
(17) Network Analog Inputs • Common Feedback (Real) • DLX In 01 to DLX In 14 (Real) • DLX In 15 to DLX In 16 (DINT)	The Common Feedback correlates with the Feedback word for the drive. The DLX In's correlate with DeviceLogix Port 14 parameters P17 [DLX In 01] to P32 [DLX In 16]
(7) Miscellaneous Analog Inputs • Real-Time Clock data	Year, Month, Day, DayofWeek, Hour, Minute, and Second from the Real-Time Clock in the drive

Analog Inputs are typically used to connect to real-world input devices (sensor, potentiometer, and so forth) that are wired to an I/O option module in the drive, monitor drive Feedback, read the Real-Time Clock, or to read a drive / peripheral parameter.

Note: Hardware Analog Inputs are available in the PowerFlex 753 and v2.xxx (and higher) PowerFlex 755 drives.

Analog Outputs 

Available analog outputs from the DeviceLogix program include:

Analog Outputs	Description
(12) Hardware Analog Outputs • DLX Real OutSP1 to DLX Real OutSP8 (Real) • DLX DINT OutSP1 to DLX DINT OutSP4 (DINT)	Scratchpad registers for DLX program output use.
(17) Network Analog Outputs • Reference Command (Real) • DLX Out 01 to DLX Out 14 (Real) • DLX Out 15 to DLX Out 16 (DINT)	The Reference Command correlates with the Reference word for the drive. The DLX Out's correlate with DeviceLogix Port 14 parameters P1 [DLX Out 01] to P16 [DLX Out 16]

Analog Outputs are typically used to connect to real-world output devices (meter panel, valve, and so forth) that are wired to an I/O option module in the drive, control the Reference to the drive, or to write a drive / peripheral parameter.

Note: Hardware Analog Outputs are available in the PowerFlex 753 and v2.xxx (and higher) PowerFlex 755 drives.

Tips

Data Types

The DeviceLogix Analog In/Out parameters support different data types. For example, P17 [DLX In 01] is a Real whereas P32 [DLX In 16] is a DINT. Be sure to assign a DLX In / Out to a parameter that has the same data type.

Function Block elements also support different data types. Click the Properties

Button  in the upper right-hand corner of each element to display the Function Block properties. The Function Data Type field displays the supported data types. If Real DLX Ins are used with a Function Block element configured for DINT (typical default), the fraction is truncated.

PowerFlex 755 v1.xxx Firmware Datalinks and internal DeviceLogix scratchpad registers (P54…P81)

Each DLX In and DLX Out is a Datalink and cannot be directly mapped to each other or another Datalink, such as a Datalink in the Port 13 Embedded EtherNet/IP. Use the DeviceLogix internal scratchpad registers to pass data between the Datalinks.

Example 1 – Reading data from the network

A value from the network is input to DLX Real SP 1.

N:P.P#	Name	Value
[11: 13.1]	DL From Net 01	Port 14: DLX Real SP1

DLX In 01 reads DLX Real SP1 and can now be used as an Analog Input in the DeviceLogix program.

N:P.P#	Name	Value
[11: 14.17]	DLX In 01	Port 14: DLX Real SP1

DLX Real SP1 is the intermediary register that allows the two Datalinks to work together.

Example 2 – Writing data to the network

The DeviceLogix program controls an Analog Output value in DLX Out 01, which is written to DLX Real SP2.

N:P.P#	Name	Value
[11: 14.1]	DLX Out 01	Port 14: DLX Real SP2

The DLX Real SP2 value is output to the network.

N:P.P#	Name	Value
[11: 13.17]	DL To Net 01	Port 14: DLX Real SP2

DLX Real SP2 is the intermediary register that allows the two Datalinks to work together.

PowerFlex 753 (all) and PowerFlex 755 v2.xxx (and higher) Datalinks and internal DeviceLogix scratchpad registers (P82…P105)

Each DLX In and DLX Out is a Datalink and cannot be directly mapped to each other or another Datalink, such as a Datalink in the Port 13 Embedded EtherNet/IP. Although the same method used with PowerFlex 755 v1.xxx firmware can be employed, there is a more efficient method that does not require a DeviceLogix Datalink to be used.

Example 1 – Reading data from the network

A value from the network is input to DLX Real InSP1.

Drive	Datalink	Value
753	Port 0 P895 [Data In A1]	Port 14: DLX Real InSP1
755	Port 13 P1 [DL From Net 01]	

DLX Real InSP1 can now be used as a Hardware Analog Input and used directly with a Function Block (a DeviceLogix Datalink is not required).

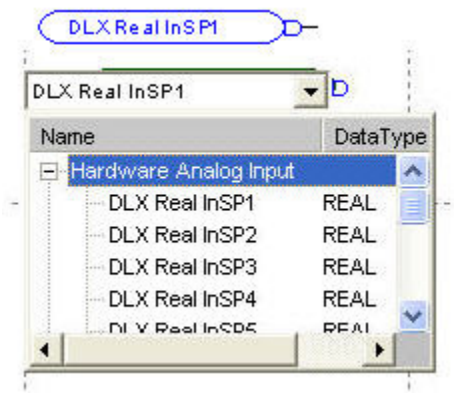

Example 2 – Writing data to the network

The DeviceLogix program controls an Analog Output value, which is written to DLX Real OutSP1.

Drive	Datalink	Value
753	Port 0 P905 [Data Out A1]	Port 14: DLX Real OutSP1
755	Port 13 P17 [DL To Net 01]	

DLX Real OutSP1 can now be used as a Hardware Analog Output and used directly with a Function Block (a DeviceLogix Datalink is not required).

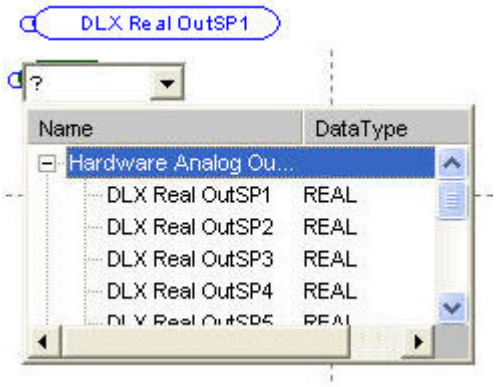

Program Examples

Example 1: Selector Switch Operation

This example demonstrates how a selector switch operation similar to the feature in the PowerFlex 700S can be achieved through the embedded DeviceLogix in the PowerFlex 750-Series drive. A selector switch is simulated in the drive by using a combination of inputs to produce multiple outputs. Digital inputs in the drive are used to output configurable multiple preset speeds (75 Hz, 85 Hz, 95 Hz, and 105 Hz) to P571 [Preset Speed 1]. It is assumed that the 750-Series drive has an I/O module that is installed in Port 4.

The following truth table represents the inputs and outputs for a 4 position selector switch.

Inputs		Outputs	
Input 1	Input 2	Binary Output	Selector Switch Output
0	0	0	Output A
0	1	1	Output B
1	0	2	Output C
1	1	3	Output D

The Logic Map offers a high-level explanation of how these outputs are achieved.

Figure 92 - Two Input Four Position Selector Switch Logic Map

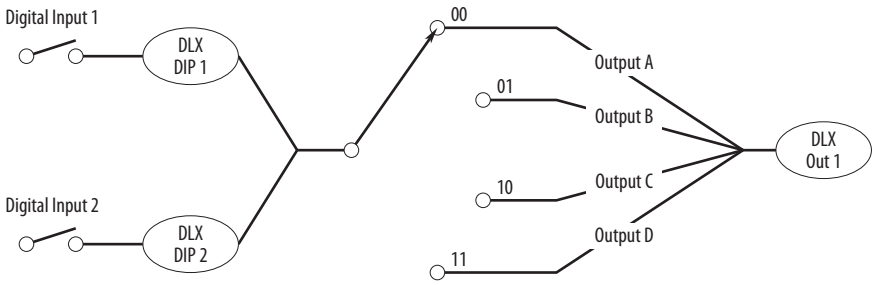

Discrete Inputs in the Drive are used for Inputs 1 and Input 2. Output A, B, C, and D is linked to DeviceLogix Scratchpad Registers. The scratchpad feature allows further flexibility to modify the values of these outputs.

The resulting output can be linked to a parameter and be used to support drive applications, such as configuring multiple preset speeds and point-to-point positioning. In this example, it controls Preset Speed 1.

Parameter Configuration

The following parameters are configured for this example:

Port Parameter No.	Parameter	Value	Description
14.1	DLX Out 01	Port 0: Preset Speed 1	
14.33	DLX DIP 1	Port 4: Dig In Status.Input 1	Digital input 1 from Selector Switch
14.34	DLX DIP 2	Port 4: Dig In Status.Input 2	Digital input 2 from Selector Switch
14.17	DLX In 01	Port 14: DLX Real SP1	Output A
14.18	DLX In 02	Port 14: DLX Real SP2	Output B
14.19	DLX In 03	Port 14: DLX Real SP3	Output C
14.20	DLX In 04	Port 14: DLX Real SP4	Output D
14.54	DLX Real SP1	75.00	Output A Preset Speed
14.55	DLX Real SP2	85.00	Output B Preset Speed
14.56	DLX Real SP3	95.00	Output C Preset Speed
14.57	DLX Real SP4	105.00	Output D Preset Speed
0.571	Preset Speed 1	varies	Output from Selector Switch

Functional Block Programming

The Selector Switch Operation example consists of 14 blocks that are shown in the following figure.

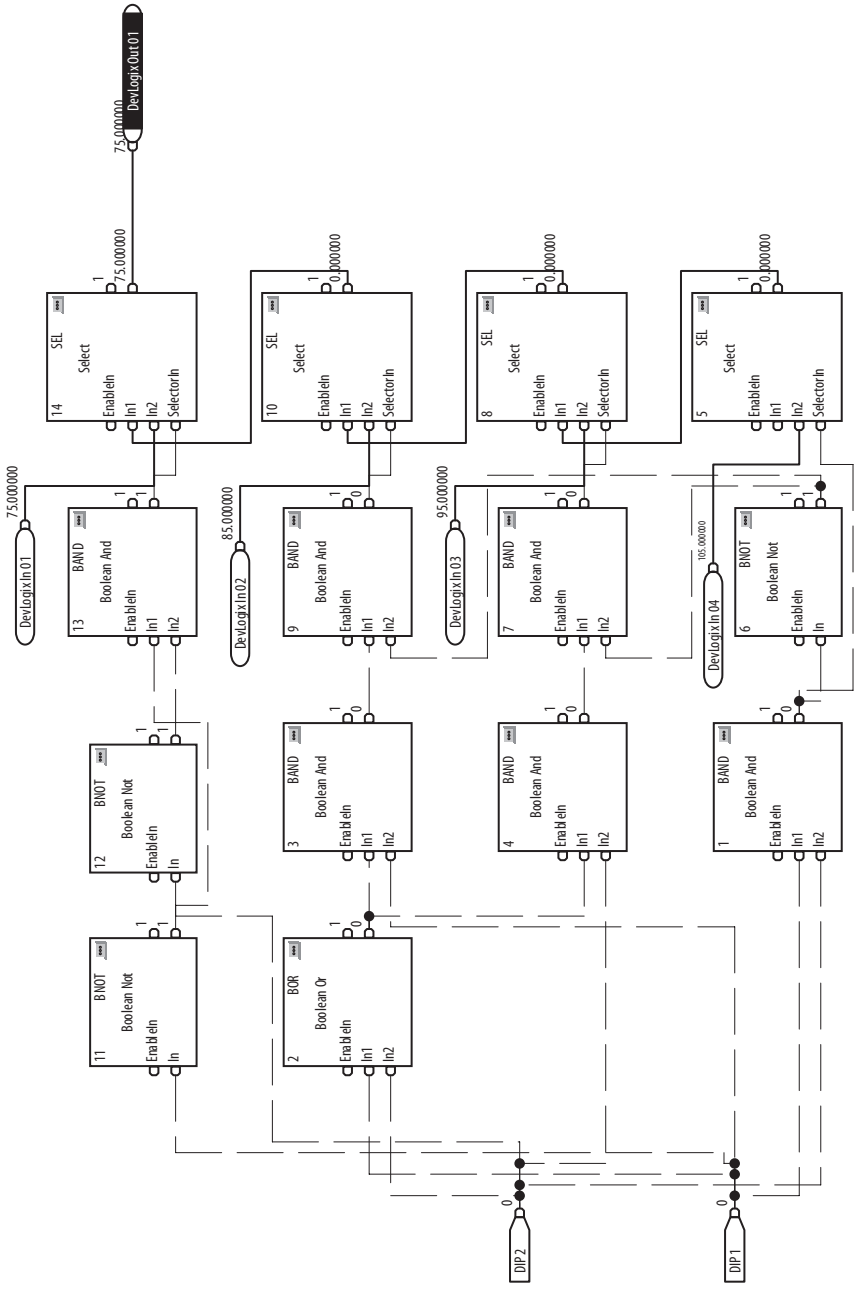

Example 2: Scale Block Operation

This example demonstrates how a scale block operation similar to the feature in the PowerFlex 700VC can be achieved through the embedded DeviceLogix in the PowerFlex 750-Series drive. A Scale Block scales a parameter value and the input of the block is linked to a parameter that is desired to be scaled. The scale block also has both input and output high limits and low limit parameters.

Figure 93 - Scale Block High-Level View

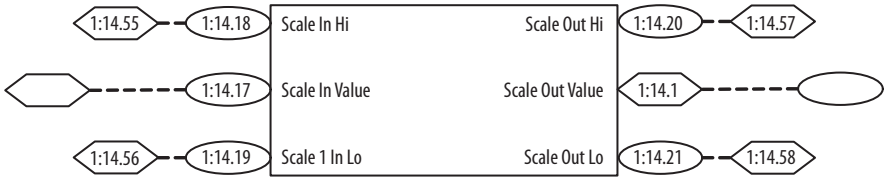

Scale In Hi determines the high value for the input to the scale block.

Scale Out Hi determines the corresponding high value for the output of the scale block.

Scale In Low determines the low value for the input to the scale block.

Scale Out Lo determines the corresponding low value for the output of the scale block.

Scale Out Value of the block is then available for user to link to any parameter that accepts links.

Parameter Configuration

The following DeviceLogix parameters are configured for this example:

Port Parameter No.	Parameter	Value	Description
14.1	DLX Out 01	* Set to the Scale Output write source *	A floating point output that can be controlled by the DeviceLogix program
14.17	DLX In 01	* Set to the Scale Input value read source *	A floating point input that can be read by the DeviceLogix program.
14.18	DLX In 02	Port 14: DLX Real SP2	Scale In Low
14.19	DLX In 03	Port 14: DLX Real SP3	Scale In High
14.20	DLX In 04	Port 14: DLX Real SP4	Scale Out Low
14.21	DLX In 05	Port 14: DLX Real SP5	Scale Out High
14.55	DLX Real SP2	0.0	Scale In Low value
14.56	DLX Real SP3	1800.00	Scale In High value
14.57	DLX Real SP4	0.000	Scale Out Low value
14.58	DLX Real SP5	10.00	Scale Out High value

Functional Block Programming

The Scale Block Operation example consists of 12 blocks that are shown in the following figure.

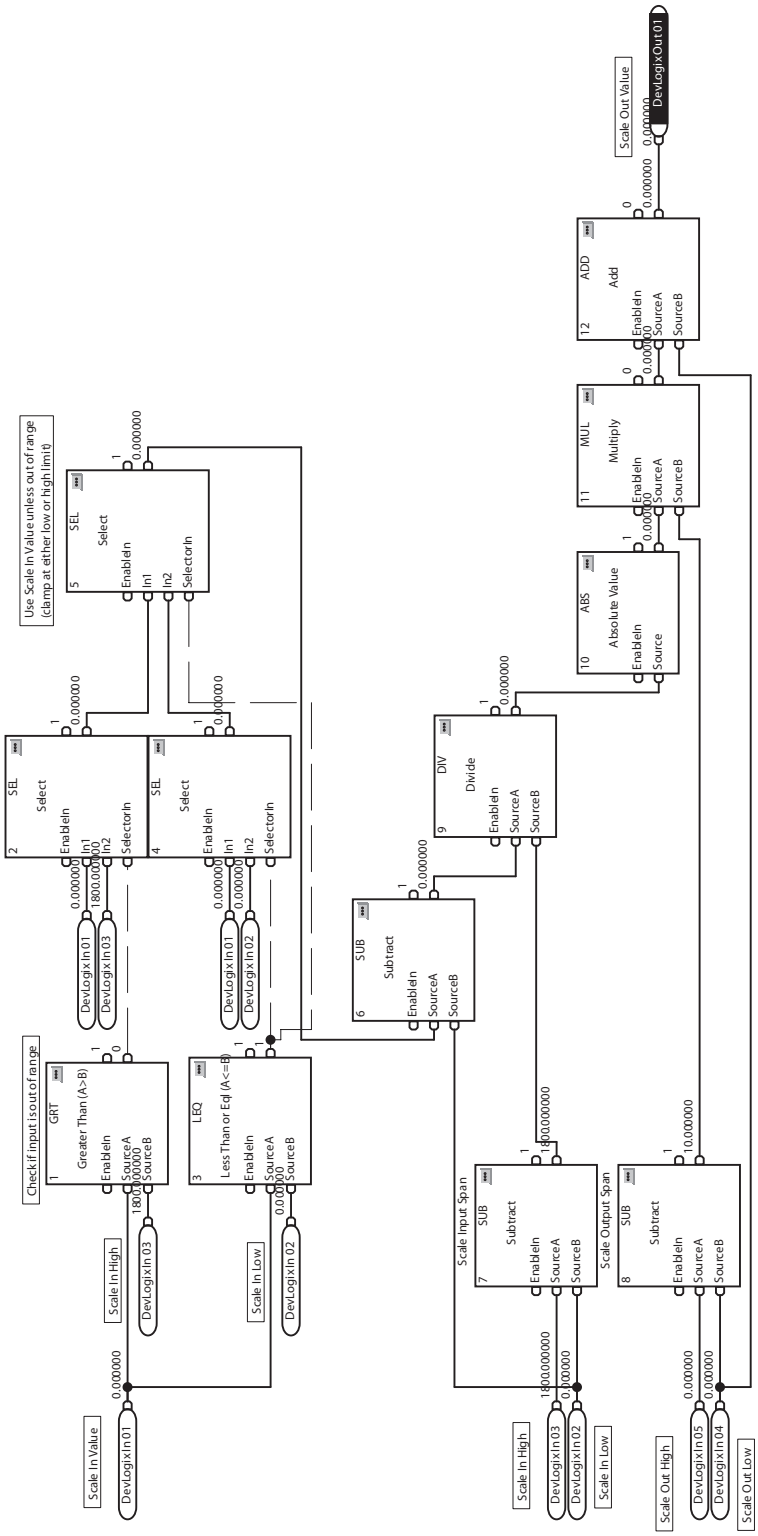

Example 3: Diverter Operation

This example demonstrates basic control logic to operate a diverter in a conveyor system. The diverter directs parts from an upstream conveyor to one of two downstream conveyors. It alternately sends 'x' parts down each downstream conveyor.

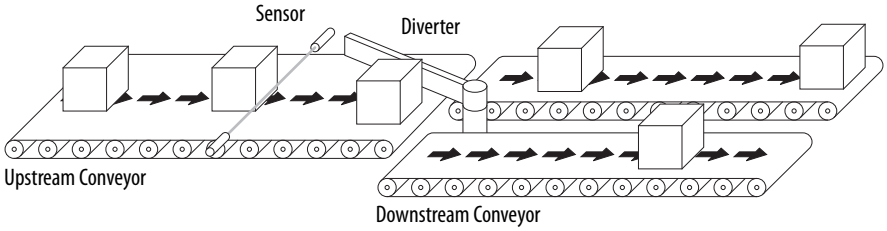

The application consists of the following discrete I/O:

Type	Name	Description
Inputs	Part Present Sensor	Identifies that a part is present
Outputs	Diverter Actuator	Controls the diverter actuator to direct the flow of parts

Example logic requirements:

- If Part Present Sensor is ON, then increment the parts counter
- If the parts-counter preset is reached, reset the counter and alternately set or reset the Diverter Actuator

Parameter Configuration

The following parameters are configured for this example:

Port Parameter No.	Parameter	Value	Description
4.20	T00 Select	Port 14: DLX DigOut Sts2.DLX DOPSts0	Output on I/O module in Port 4
14.33	DLX DIP 1	Port 4: Dig In Status.Input 1	Part Present Sensor input (I/O module in Port 4)
14.51	DLX DigOut Sts2		Diverter Actuator output

Functional Block Programming

This example consists of four blocks that are shown in the following figure.

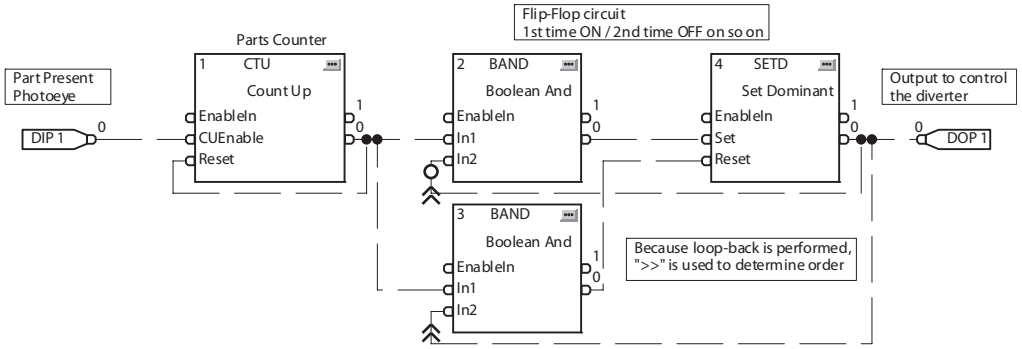

Example 4: Wet Well Operation

This example demonstrates how basic control logic can be used for simple applications. It is assumed that the PowerFlex 755 has an I/O module installed in Port 4.

Figure 94 - Wet Well

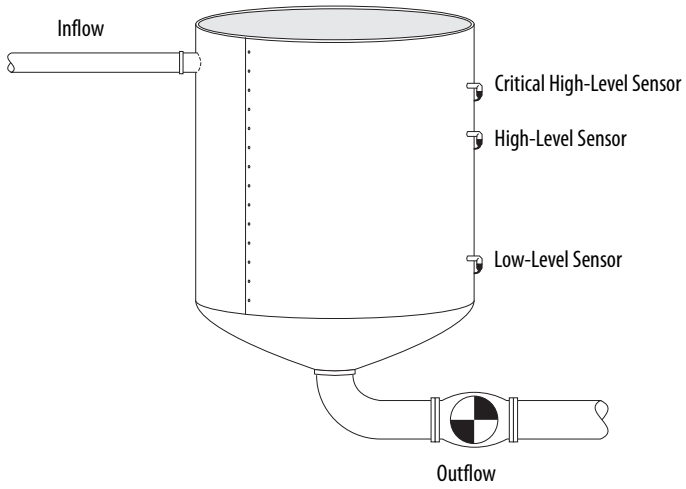

The application consists of the following discrete I/O:

Type	Name	Description
Inputs	Fault Reset pushbutton	Used to reset any faults or alarms
	Critical High-Level sensor	Indicates a critically high level. It is normally a backup to the High-Level sensor and is also used to detect if the High-Level sensor is faulty. When ON, the drive operates at an even higher output frequency in case it is due to a high inflow.
	High-Level sensor	Indicates the well is at a high level and it is time to start pumping (normal operation). The drive operates at a 'normal' rate unless the Critical High Level was reached.
	Low-Level sensor	When OFF, it is used to indicate that the well is empty (as long as the High and Critical High-Level sensors are also OFF). The drive stops operating (end of pumping cycle).
Outputs	Sensor Fault pilot light	Indicates that there is a problem with either the High-Level or Low-Level sensors
	Too Much Time Alarm pilot light	If the drive operates for more than the normal amount of time it takes to empty the well, there can be increased inflow or perhaps the Low-Level sensor is stuck ON. An alarm indication is made and the drive continues to operate.
	Critical High-Fault flashing light / alarm horn	Indicates a critically high level that requires immediate attention.

Example logic requirements:

- If Critical High-Level or High-Level sensor is ON, then start the drive.
  - If Critical High-Level sensor is ON, then switch to higher rate (90 Hz) for the rest of the pumping cycle. Else run at the normal rate (60 Hz)
  - Run until all three level sensors are OFF
  - Pump should run at least 'x' minutes at a minimum. If the Low-Level sensor fails, this prevents the High-Level sensor from cycling the pump On/Off too quickly.
- Annunciate a Sensor Fault condition
  - The Low-Level sensor should never be OFF when either the High Level or Critical High-Level sensors are ON
  - The High-Level sensor should never be OFF when the Critical High-Level sensor is ON
  - The Critical High-Level sensor should never be ON when either the High-Level or Low-Level sensors are OFF
- Annunciate a Critical High-Level condition
  - The Critical High-Level output should never be ON
- Annunciate if pumping cycle time is longer than normal ('y' minutes)
  - Monitor the amount of time a pump cycle takes by timing how long the drive is operating.
  - If greater than 'y' minutes, energize the Too Much Time Alarm output
- Reset alarms / faults with a Reset pushbutton input

Parameter Configuration

The following parameters are configured for this example.

The following DeviceLogix parameters are configured for this example:

Port Parameter No.	Parameter	Value	Description
0.520	Max Fwd Speed	90.00	
0.545	Speed Ref A Sel	Port 0: Preset Speed 1	
0.571	Preset Speed 1	60.00	Normal pumping rate (60 Hz)
0.573	Preset Speed 3	90.00	High speed pumping rate (90 Hz)
4.10	RO0 Select	Port 14: DLX DigOut Sts2.DLX DOPSts0	Sensor Fault output
4.20	TO0 Select	Port 14: DLX DigOut Sts2.DLX DOPSts1	Critical High-Level Fault output
4.30	TO1 Select	Port 14: DLX DigOut Sts2.DLX DOPSts2	Too Much Time Alarm output
14.33	DLX DIP 1	Port 4: Dig In Status.Input 1	Critical High-Level Sensor input
14.34	DLX DIP 2	Port 4: Dig In Status.Input 2	High-Level Sensor input
14.35	DLX DIP 3	Port 4: Dig In Status.Input 3	Low-Level Sensor input
14.36	DLX DIP 4	Port 4: Dig In Status.Input 4	Alarm / Fault Reset pushbutton input

Functional Block Programming

This example consists of 16 blocks that are shown in the following figure.

Figure 95 - Control Circuit

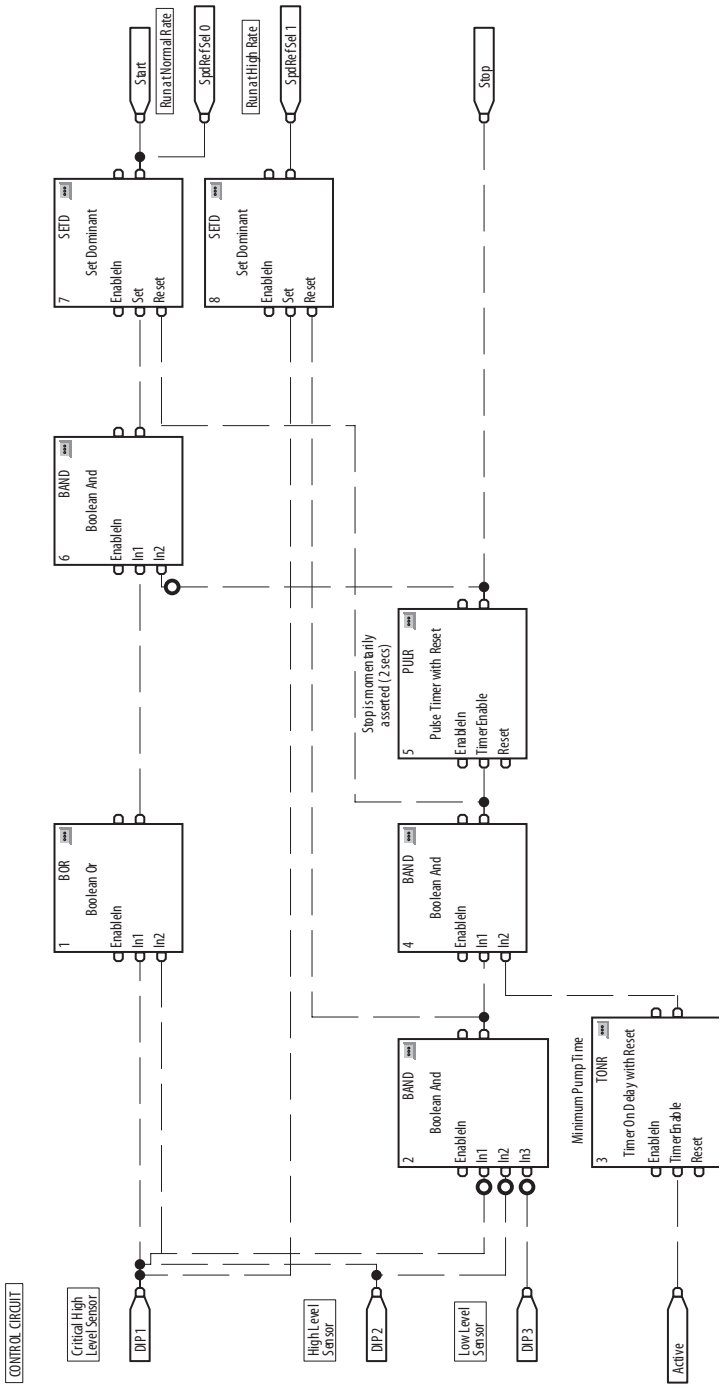

Figure 96 - Fault/Alarm Circuit

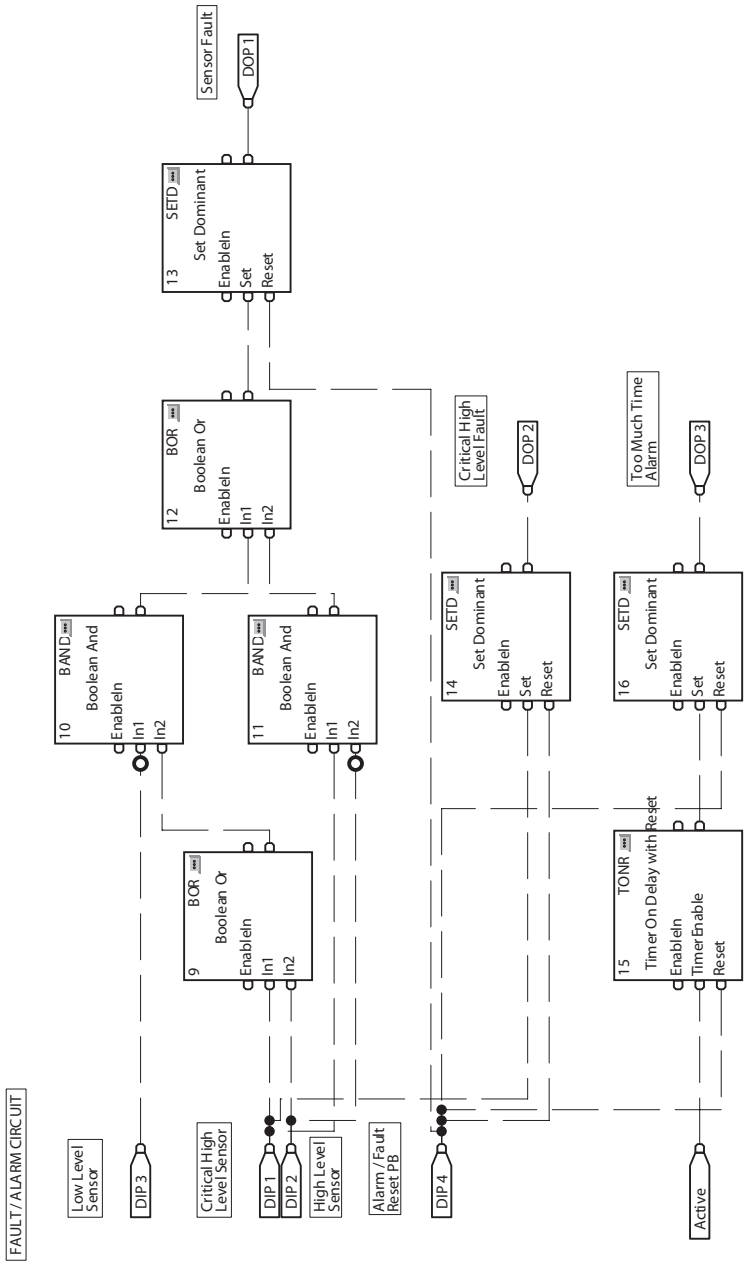

Example 5: Utilizing the Real-Time Clock

This example demonstrates how to utilize the PowerFlex 750-Series drive Real-Time Clock in a DeviceLogix program.

Example logic requirements:

- Run the drive Monday through Friday between 7:45 a.m. and 5:15 p.m

Parameter Configuration

The following parameters are configured for this example:

Port Parameter No.	Parameter	Value	Description
0.545	Speed Ref A Sel	Port 0: Preset Speed 1	
0.571	Preset Speed 1	60.00	Operating speed of drive

Functional Block Programming

This example consists of 15 blocks that are shown in the following figure.

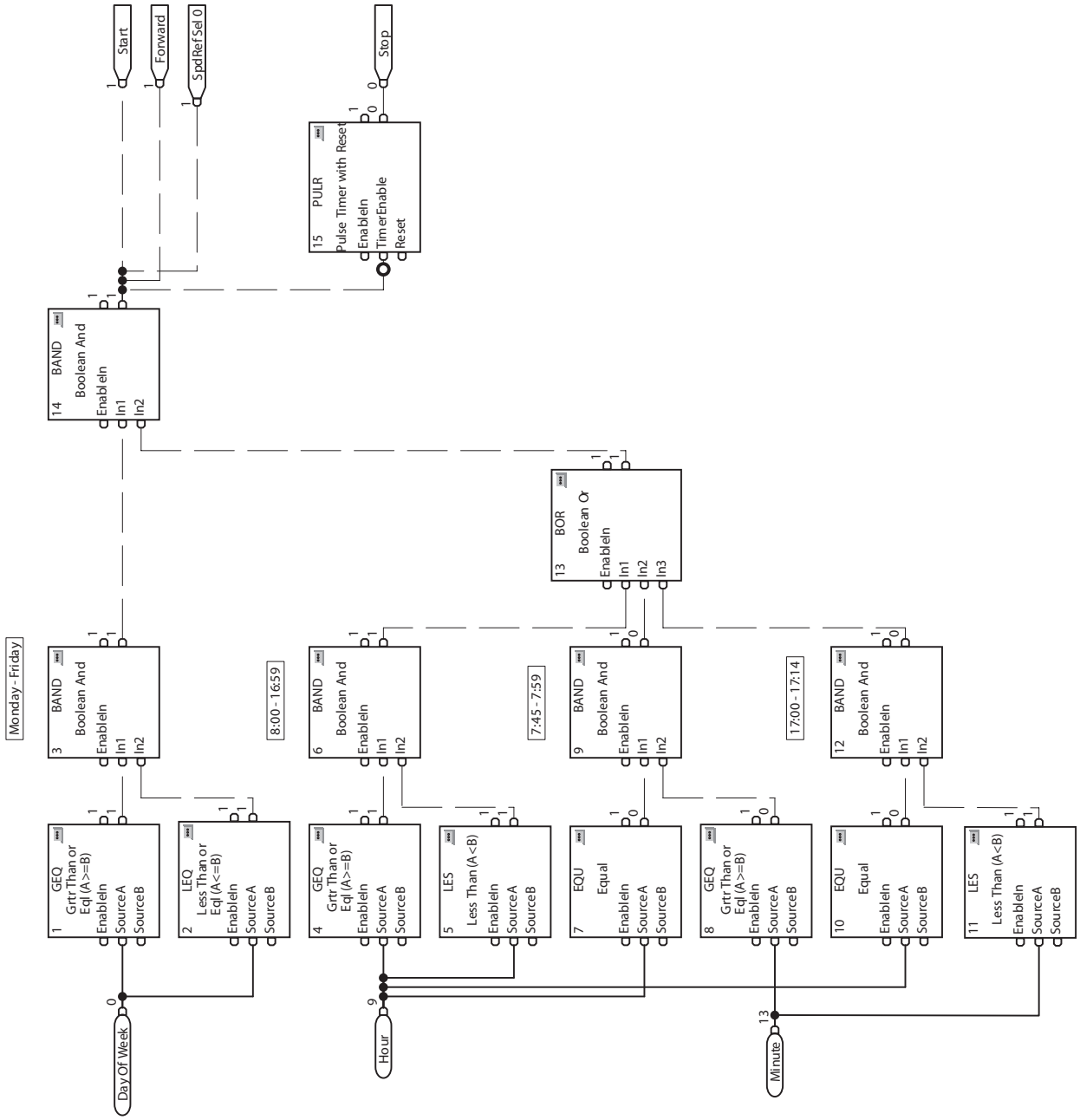

Permanent Magnet Motors

Compatible Allen-Bradley Servo Motors

Table 27 contains a list of specifications for Allen-Bradley servo motors compatible with PowerFlex 750-Series drives. This information is provided to help configure PowerFlex 750-Series drives with the appropriate servo motor data. For information regarding compatibility and configuration of any Allen-Bradley servo motors (including RDB Series Direct Drive Motors) and third-party PM motors that are not listed here, contact Allen-Bradley Drives Technical Support.

When using a PowerFlex 755 drive to control a permanent magnet motor, the motor feedback device must have a resolution so that the number of pulses per revolution (PPR) is an exponent of two.

For example: 512, 1024, 2048, 4096, 8192...524288, 1048576...

Table 27 - Motor Name Plate and Rating Specifications

Model Number	Motor NP Volts (line to line V rms)	Motor NP Amps (A rms)	Motor NP Hertz (Hz)	Motor NP RPM (oper. rpm)	Motor NP Power (kW)	Motor Poles	Current peak (A rms)	System Cont. Stall Torque (N•m)	Motor Max RPM (rpm)
MPM-A1151M	240	4.2	333.3	5000	0.90	8	21.6	2.18	6000
MPM-A1152F	240	5.9	266.7	4000	1.40	8	31.7	4.74	5000
MPM-A1302F	240	7.4	266.7	4000	1.65	8	35.6	5.99	4500
MPM-A1304F	240	8.1	233.3	3500	2.20	8	34.2	9.30	4000
MPM-A1651F	240	14.5	200.0	3000	2.50	8	52.2	10.70	5000
MPM-A1652F	240	18.1	233.3	3500	4.03	8	73.0	13.50	4000
MPM-A1653F	240	23.2	200.0	3000	5.10	8	84.3	18.60	4000
MPM-A2152F	240	33.7	133.3	2000	5.20	8	89.0	27.00	4000
MPM-A2153F	240	32.8	133.3	2000	5.80	8	85.2	34.00	4600
MPM-A2154C	240	24.8	116.7	1750	6.50	8	89.8	55.00	2000
MPM-A2154E	240	29.6	133.3	2000	7.00	8	90.7	44.00	2650
MPM-B1151F	480	1.5	266.7	4000	0.75	8	7.0	2.18	5000
MPM-B1151T	480	3.1	333.3	5000	0.90	8	14.5	2.18	7000
MPM-B1152C	480	2.3	166.7	2500	1.20	8	8.8	2.18	3000
MPM-B1152F	480	2.9	266.7	4000	1.40	8	15.5	4.74	5200
MPM-B1152T	480	5.2	266.7	4000	1.40	8	26.8	4.74	7000
MPM-B1153E	480	2.7	200.0	3000	1.40	8	15.3	6.55	3500
MPM-B1153F	480	3.2	266.7	4000	1.45	8	22.6	6.55	5500
MPM-B1153T	480	5.5	266.7	4000	1.45	8	39.2	6.55	7000
MPM-B1302F	480	3.4	266.7	4000	1.65	8	15.6	5.99	4500
MPM-B1302M	480	5.0	266.7	4000	1.65	8	22.6	5.99	6000
MPM-B1302T	480	6.6	266.7	4000	1.65	8	30.7	5.99	7000
MPM-B1304C	480	3.4	183.3	2750	2.00	8	15.8	10.20	2750
MPM-B1304E	480	4.1	166.7	2500	2.20	8	24.2	10.20	4000
MPM-B1304M	480	7.3	233.3	3500	2.20	8	42.9	10.20	6000
MPM-B1651C	480	4.7	200.0	3000	2.50	8	20.6	10.70	3500
MPM-B1651F	480	8.2	200.0	3000	2.50	8	36.0	10.70	5000
MPM-B1651M	480	10.9	200.0	3000	2.50	8	40.2	10.70	5000
MPM-B1652C	480	7.0	166.7	2500	3.80	8	23.8	16.00	2500
MPM-B1652E	480	8.0	233.3	3500	4.30	8	42.8	19.40	3500
MPM-B1652F	480	11.0	233.3	3500	4.30	8	59.5	19.40	4500
MPM-B1653C	480	10.5	133.3	2000	4.60	8	41.9	26.80	2500
MPM-B1653E	480	10.2	200.0	3000	5.10	8	51.6	26.80	3500
MPM-B1653F	480	13.2	200.0	3000	5.10	8	66.7	26.80	4000
MPM-B2152C	480	12.3	133.3	2000	5.60	8	39.2	36.70	2500
MPM-B2152F	480	18.7	166.7	2500	5.90	8	69.3	33.00	4500
MPM-B2152M	480	21.0	166.7	2500	5.90	8	54.0	30.00	5000
MPM-B2153B	480	12.7	116.7	1750	6.80	8	42.4	48.00	2000
MPM-B2153E	480	19.3	133.3	2000	7.20	8	69.7	48.00	3000
MPM-B2153F	480	22.1	133.3	2000	7.20	8	69.6	45.00	3800
MPM-B2154B	480	13.9	116.7	1750	6.90	8	69.3	62.80	2000
MPM-B2154E	480	18.3	133.3	2000	7.50	8	69.5	56.00	3000
MPM-B2154F	480	19.8	133.3	2000	7.50	8	59.3	56.00	3300
MPL-A310P	230	3.4	294.0	4410	0.73	8	9.9,	1.58	5000
MPL-A310F	230	2.1	185.3	2780	0.46	8	6.6	1.58	3000
MPL-A320P	230	6.4	271.3	4070	1.30	8	20.9	3.05	5000
MPL-A320H	230	4.6	208.7	3130	1.00	8	13.6	3.05	3500

Model Number	Motor NP Volts (line to line V rms)	Motor NP Amps (A rms)	Motor NP Hertz (Hz)	Motor NP RPM (oper. rpm)	Motor NP Power (kW)	Motor Poles	Current peak (A rms)	System Cont. Stall Torque (N•m)	Motor Max RPM (rpm)
MPL-A330P	230	8.5	280.7	4210	1.80	8	26.9	4.08	5000
MPL-A420P	230	9.0	268.7	4030	2.00	8	32.5	4.74	5000
MPL-A430P	230	11.9	234.0	3510	2.20	8	47.4	5.99	5000
MPL-A430H	230	8.6	184.7	2770	1.80	8	31.8	6.21	3500
MPL-A4520P	230	12.4	234.0	3510	2.20	8	35.4	5.99	5000
MPL-A4520K	230	10.6	223.3	3350	2.10	8	30.4	5.99	4000
MPL-A4530F	230	9.5	144.7	2170	1.90	8	29.7	8.36	2800
MPL-A4530K	230	14.4	196.0	2940	2.50	8	43.8	8.13	4000
MPL-A4540C	230	6.6	93.3	1400	1.50	8	20.5	10.20	1500
MPL-A4540F	230	13.0	162.0	2430	2.60	8	38.2	10.20	3000
MPL-A520K	230	16.3	208.0	3120	3.50	8	46.0	10.70	4000
MPL-A540K	230	29.3	180.7	2710	5.50	8	84.9	19.40	4000
MPL-A560F	230	29.3	125.3	1880	5.50	8	84.9	27.90	3000
MPL-B310P	460	1.7	310.0	4650	0.77	8	3.0	1.58	5000
MPL-B320P	460	3.2	313.3	4700	1.50	8	5.0	3.05	5000
MPL-B330P	460	4.3	274.0	4110	1.80	8	7.0	4.18	5000
MPL-B420P	460	4.5	255.3	3830	1.90	8	9.2	4.74	5000
MPL-B430P	460	6.5	214.0	3210	2.20	8	12.0	6.55	5000
MPL-B4520P	460	6.0	236.7	3550	2.10	8	17.0	5.65	5000
MPL-B4530F	460	5.0	162.0	2430	2.10	8	13.4	8.25	3000
MPL-B4530K	460	7.8	200.7	3010	2.60	8	19.1	8.25	4000
MPL-B4540F	460	6.4	162.0	2430	2.60	8	16.3	10.20	3000
MPL-B4560F	460	8.3	144.7	2170	3.20	8	25.5	14.10	3000
MPL-B520K	460	8.1	208.0	3120	3.50	8	23.3	10.70	4000
MPL-B540K	460	14.5	177.3	2660	5.40	8	42.4	19.40	4000
MPL-B560F	460	14.5	130.7	1960	5.50	8	42.4	26.80	3000
MPL-B580F	460	18.4	132.7	1990	7.10	8	66.5	34.00	3000
MPL-B580J	460	22.6	148.0	2220	7.90	8	66.5	34.00	3800
MPL-B640F	460	22.7	106.0	1590	6.11	8	46.0	36.70	3000
MPL-B660F	460	27.2	81.3	1220	6.15	8	67.9	48.00	3000
MPL-B680D	460	24.0	94.0	1410	9.30	8	66.5	62.80	2000
MPL-B680F	460	33.9	79.3	1190	7.50	8	67.9	60.00	3000
MPL-B860D	460	33.6	96.0	1440	12.50	8	67.5	83.10	2000
MPL-B880C	460	33.6	72.7	1090	12.60	8	69.0	110.00	1500
MPL-B880D	460	40.3	86.7	1300	15.00	8	113.2	110.00	2000
MPL-B960B	460	29.7	62.0	930	12.70	8	63.6	130.00	1200
MPL-B960C	460	38.9	76.0	1140	14.80	8	88.4	124.30	1500
MPL-B960D	460	50.2	76.7	1150	15.00	8	102.5	124.30	2000
MPL-B980B	460	31.8	59.3	890	15.02	8	70.7	162.70	1000
MPL-B980C	460	48.2	67.3	1010	16.80	8	99.0	158.20	1500
MPL-B980D	460	63.6	74.7	1120	18.60	8	141.4	158.20	2000
MPG-A004-031	230	1.8	222.7	3340	0.21	8	4.0	0.60	6000
MPG-A010-031	230	2.1	189.3	2840	0.36	8	6.0	1.21	4875
MPG-A010-091	230	0.9	295.3	4430	0.19	8	2.3	0.41	5900
MPG-A025-031	230	9.9	181.0	1810	0.88	12	19.8	4.65	5200
MPG-A025-091	230	3.0	168.0	1680	0.52	12	8.5	2.95	5625
MPG-A050-031	230	24.7	120.0	1200	1.50	12	53.0	11.90	2510
MPG-A050-091	230	5.0	275.0	2750	0.75	12	15.6	2.60	3775
MPG-A110-031	230	20.2	122.0	1220	2.20	12	53.0	17.20	2875

Model Number	Motor NP Volts (line to line V rms)	Motor NP Amps (A rms)	Motor NP Hertz (Hz)	Motor NP RPM (oper. rpm)	Motor NP Power (kW)	Motor Poles	Current peak (A rms)	System Cont. Stall Torque (N•m)	Motor Max RPM (rpm)
MPG-A110-091	230	17.0	184.0	1840	1.60	12	33.2	8.30	3500
MPG-B010-031	460	1.6	162.7	2440	0.34	8	4.4	1.33	6450
MPG-B010-091	460	0.7	357.3	5360	0.23	8	1.5	0.41	6450
MPG-B025-031	460	4.0	219.0	2190	0.92	12	11.3	4.02	4838
MPG-B025-091	460	1.9	175.0	1750	0.54	12	5.2	2.95	5900
MPG-B050-031	460	16.3	92.0	920	1.20	12	32.5	12.40	2510
MPG-B050-091	460	3.4	290.0	2900	0.79	12	9.9	2.60	4560
MPG-B110-031	460	12.9	112.0	1120	2.00	12	31.1	17.00	2420
MPG-B110-091	460	10.6	184.0	1840	1.60	12	20.5	8.30	3500
1326AB-B410G	460	2.5	118.0	3540	1.00	4	7.4	2.70	5000
1326AB-B410J	460	3.5	165.0	4950	1.40	4	10.4	2.70	7250
1326AB-B420E	460	2.8	70.0	2100	1.10	4	8.5	5.00	3000
1326AB-B420H	460	5.5	137.3	4120	2.20	4	15.6	5.10	6000
1326AB-B430E	460	3.9	67.7	2030	1.40	4	11.7	6.60	3000
1326AB-B430G	460	5.6	114.3	3430	2.30	4	16.8	6.40	5000
1326AB-B515E	460	6.1	70.3	2110	2.30	4	18.3	10.40	3000
1326AB-B515G	460	9.5	88.7	2660	2.90	4	28.5	10.40	5000
1326AB-B520E	460	6.7	71.0	2130	2.90	4	20.1	13.00	3000
1326AB-B520F	460	8.8	70.3	2110	2.90	4	26.4	13.10	3500
1326AB-B530E	460	9.5	74.3	2230	4.20	4	28.5	18.00	3000
1326AB-B720E	460	17.5	70.0	2100	6.80	4	52.5	30.90	3500
1326AB-B720F	460	27.5	117.0	3510	11.70	4	66.5	31.80	5000
1326AB-B730E	460	22.8	78.3	2350	9.60	4	66.5	39.00	3350
1326AB-B740C	460	20.9	52.3	1570	8.70	4	62.7	53.00	2200
1326AB-B740E	460	32.0	79.7	2390	12.70	4	66.5	50.80	3400
1326AS-B310H	460	0.8	204.5	4090	0.30	6	2.4	0.70	6200
1326AS-B330H	460	2.1	204.5	4090	0.90	6	6.0	2.10	6500
1326AS-B420G	460	2.6	179.0	3580	1.20	6	7.8	3.20	5250
1326AS-B440G	460	5.4	149.0	2980	2.00	6	16.2	6.40	5250
1326AS-B460F	460	6.2	148.5	2970	2.80	6	18.6	9.00	4300
1326AS-B630F	460	7.8	142.7	2140	2.40	8	18.5	10.70	4500
1326AS-B660E	460	11.8	100.7	1510	3.40	8	29.8	21.50	3000
1326AS-B690E	460	19.0	87.3	1310	5.00	8	41.3	36.40	3000
1326AS-B840E	460	21.2	79.3	1190	4.70	8	39.5	37.60	3000
1326AS-B860C	460	17.6	77.3	1160	6.00	8	44.4	49.30	2000
1326AH-B330F	460	2.1	0.0	3000	0.75	-	9.0	-	3000
1326AH-B440F	460	3.3	0.0	2500	1.22	-	13.8	-	2500
1326AH-B540F	460	11.1	0.0	2500	2.60	-	47.2	-	2500
3050R-7	390	66.0	50.0	500	30.00	12	132.0	-	500
11050R-7	390	218.0	50.0	500	110.00	12	436.0	-	500

Integrated Motion on EtherNet/IP Application

IMPORTANT Not all drive functions are accessible when used in an Integrated Motion on EtherNet/IP application.

Introduction

The Integrated Motion on EtherNet/IP application is a feature with v2.*xxx* and higher firmware PowerFlex® 755 drives. It provides a common user experience as Kinetix® 6500 drives when used with Logix controllers (v19 and higher) on an EtherNet/IP network.

- Same motion profile in RSLogix 5000® provides a common configuration experience. The PowerFlex® 755 drive uses the Motion Properties/Axis Properties and the same motion attributes as the Kinetix® 6500 servo drive.
- Same RSLogix 5000® motion instructions provide a common programming experience. An extra motion instruction, MDS – Motion Drive Start, has also been added to allow a ramped start with "Flying Start" capability (ability to start into a rotating motor).

Two options are available for integrating PowerFlex 755 drives with Logix controllers:

1. "Standard Drive" using Drive Add-on Profiles (AOPs) – RSLogix 5000 software v16 and higher.
2. "Integrated Motion Drive" using Integrated Motion on EtherNet/IP technology – RSLogix 5000 software v19 and higher.

When to consider using Integrated Motion on EtherNet/IP with PowerFlex 755 drives:

- Applications having both servos and drives - convenient to be able to configure/program servos and drives the same way.
- Drive applications that could benefit from motion instructions - servo performance is not needed, but it is advantageous to use the RSLogix 5000 motion instruction set to save development time.

IMPORTANT Firmware v12 and higher requires RSLogix 5000 v28 and higher to work with Integrated Motion on EtherNet/IP.

Special considerations when using PowerFlex 755 drives in Integrated Motion on EtherNet/IP mode:

- A PowerFlex 755 drive does not have the performance of a Kinetix servo and is not intended to be a replacement.

PowerFlex 755 Update	Time
Course Update Period (network)	1. 3 ms min. (6 ms min. when used with a permanent magnet motor without feedback). 2. Use 5 ms min. when used with Integrated Motion options. 3. If a drive is used outside its rated temperature range of 0-50C (32-122F) faults may occur. A possible solution is to increase the course update period to 15 ms min.
Torque loop	256 us
Velocity loop	1024 us
Position loop	1024 us

- When a PowerFlex 755 is used in Integrated Motion on EtherNet/IP mode, the Logix controller and RSLogix 5000 are the exclusive owners of the drive (same as Kinetix). An HIM or drive software, such as DriveExplorer™ and DriveTools™ SP software, cannot be used to control the drive or change configuration settings. These tools can only be used for monitoring.
- The following peripherals can be installed, see Feedback Configuration Options on page 519 for valid ports and supported combinations:
  - HIM (20-HIM-A6 / -C6S) - monitor only
  - Universal Feedback Encoder Option (20-750-UFB-1)
  - Incremental Encoder Option (20-750-ENC-1)
  - Dual Incremental Encoder Option (20-750-DENC-1)
  - Safe Torque Off Module (20-750-S)
  - Safe Speed Monitor Module (20-750-S1)
  - 24V Aux Control Power Supply (20-750-APS)

  Other peripherals such as 20-750 I/O modules are supported with firmware revision 12.001 and later.
- Not all drive functions are available when used in an Integrated Motion on EtherNet/IP application. See the Parameter / Instance Attribute Mapping tables in this appendix to view which drive parameters correlate to motion attributes. If a parameter is not listed, it is not accessible and its function is not available. Examples of functions that are not available include:
  - DeviceLogix™
  - Pump Jack and Pump Off
  - Position Jump and Traverse



ATTENTION: A Kinetix drive automatically reads the permanent magnet motor/encoder configuration data. Conversely, permanent magnet motor/encoder configuration data must be manually entered/tuned when using a PowerFlex 755 drive. If incorrect data is entered, unintended motion could occur when a Motion Servo On (MSO) instruction is executed.

Feedback Configuration Options

The following feedback module combinations are supported.

Option	Supported Module	Catalog Number	Valid Ports
Two Feedback Options	Single Incremental Encoder	20-750-ENC-1	4…8
	Dual Incremental Encoder	20-750-DENC-1	4…8
	Universal Feedback	20-750-UFB-1	4…6
Two Feedback Options and One Safe Torque Off Option	Single Incremental Encoder	20-750-ENC-1	4 and 5
	Dual Incremental Encoder	20-750-DENC-1	4 and 5
	Universal Feedback	20-750-UFB-1	4 and 5
	Safe Torque Off	20-750-S	6
Two Feedback Options and One Safe Speed Monitor Option (1)	Single Incremental Encoder	20-750-ENC-1	4 and 5
	Dual Incremental Encoder	20-750-DENC-1	4 and 5
	Universal Feedback	20-750-UFB-1	4 and 5
	Safe Speed Monitor	20-750-S1	6

(1) The Safe Speed Monitor option module must be used with the 20-750-DENC-1 Dual Incremental Encoder module or the 20-750-UFB-1 Universal Feedback module.

An invalid hardware configuration results in a Module Fault: (Code 16#0010) Mode or state of module does not allow object to perform requested service.

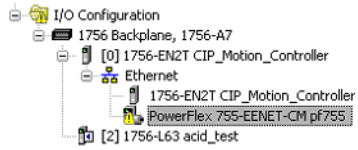

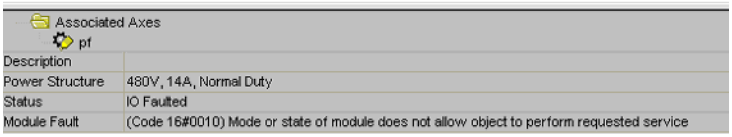

Considerations for Using Position Feedback Devices on the PowerFlex 755 in the Integrated Motion on EtherNet/IP Context

The PowerFlex 755 drive connects to position feedback devices (encoders) by using one or more feedback option modules that are installed in the control pod.

There are currently three supported types of feedback modules:

- Single Incremental Encoder (20-750-ENC-1)
- Dual Incremental Encoder (20-750-DENC-1)
- Universal Feedback (20-750-UFB-1)

IMPORTANT Single and dual incremental feedback options, 20-750-ENC-1 and 20-750-DENC-1, cannot use registration inputs. Use the Universal Feedback option 20-750-UFB-1 if registration homing inputs are required.

The 20-750-DENC-1 and 20-750-UFB-1 modules contain two “hardware feedback channels”, which means up to two encoders can be connected to each module. The 20-750-ENC-1 only contains one hardware feedback channel.

An Integrated Motion on EtherNet/IP Axis can have up to two feedback devices that are associated with it. When two devices are in use, they are defined as the “Motor Feedback Device” and the “Load Feedback Device.” These two devices are also referred to as “Integrated Motion on EtherNet/IP Feedback 1” and “Integrated Motion on EtherNet/IP Feedback 2,” respectively.

Each Integrated Motion on EtherNet/IP feedback device has an associated Integrated Motion on EtherNet/IP feedback type. The feedback type describes the type of encoder that can be used as that feedback device.

When configuring a drive using RSLogix 5000 and Integrated Motion on EtherNet/IP, the Associated Axes page of the drive Module Properties dialog is used to associate each feedback device with a feedback hardware channel on the drive.

Before using the Associated Axes page, each feedback module present in the drive must be defined on the Module Definition dialog box. The Module Definition dialog box is accessed from the General tab of the Module Properties dialog box for the drive.

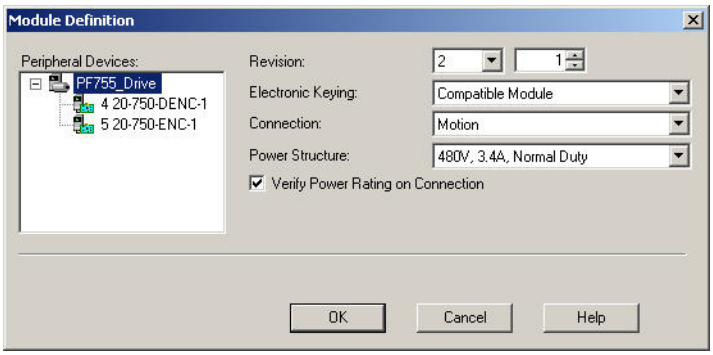

After each feedback module has been defined, a drive hardware feedback channel must be selected for each feedback device. A list defines each available channel by the control-pod port number of the feedback module and the channel within that port. A sequential alphabetic character is used to identify each available feedback channel for a module. For example, if a feedback module contains two channels, they are identified as “Channel A” and “Channel B.”

The correct wiring for an encoder in this system depends on three things:

- The type of feedback module
- The type of encoder
- Which hardware feedback channel is used to connect the encoder (A or B)

If there is only one way to wire an encoder to a feedback module, then either hardware Channel A or Channel B can be selected for the feedback module.

If there are two ways to wire an encoder to a feedback module, “Channel A” is used for one set of terminals, and “Channel B” is used for the other set of terminals.

Table 28 identifies the allowed Integrated Motion on EtherNet/IP Feedback types and the correct encoder connection terminals when the feedback module is a
20-750-ENC-1.

Table 28 - Single Incremental-encoder Feedback Type and Connections

Integrated Motion on EtherNet/IP Feedback Type	20-750-ENC-1: Channel A Terminals
Not Specified (0)	N/A
Digital AqB (1)	A (NOT), A, B (NOT), B, Z (NOT), Z

Table 29 shows the allowed Integrated Motion on EtherNet/IP Feedback types and the correct encoder connection terminals when the feedback module is a 20-750-DENC-1.

Table 29 - Dual Incremental-encoder Feedback Type and Connections

Integrated Motion on EtherNet/IP Feedback Type	20-750-DENC-1: Channel A Terminals	20-750-DENC-1: Channel B Terminals
Not Specified (0)	N/A	N/A
Digital AqB (1)	Encoder 0: A (NOT), A, B (NOT), B, Z (NOT), Z	Encoder 1: A (NOT), A, B (NOT), B, Z (NOT), Z

Table 30 lists the allowed Integrated Motion on EtherNet/IP Feedback types and the correct encoder connection terminals when the feedback module is a Universal Feedback module, 20-750-UFB-1. It also identifies how the two “Device Select” parameters on the 20-750-UFB-1 module are configured in each case.

When a 20-750-UFB-1 module is used in an Integrated Motion on EtherNet/IP system, the “FB0” parameters are always used for configuration and status of Channel A and the “FB1” parameters are always used for configuration and status of Channel B.

Table 30 identifies that, for some Integrated Motion on EtherNet/IP Feedback Types, there are two possible connection schemes using RSLogix 5000. If Channel A is selected, one scheme is used. If Channel B is selected, the other scheme is used. Conversely, for the other Integrated Motion on EtherNet/IP Feedback Types, there is only one possible connection scheme.

The “Digital AqB” Feedback Type is a special case. If only one of the channels on a particular 20-750-UFB-1 module is configured to “Digital AqB”, then the A, B, and Z terminals are used, regardless of whether this type is assigned to Channel A or Channel B. If both channels are configured to “Digital AqB”, then Channel A uses the A, B, Z terminals, and Channel B uses the terminals that are labeled “Sine” and “Cosine”. In this case, they are expected to carry normal AqB encoder signals. These two cases are included in the table.

Configuration of both 20-750-UFB-1 module channels to use the same terminals is considered a configuration error and does not allow proper operation of the system.

Table 30 Universal Feedback Type and Connections

Integrated Motion on EtherNet/IP Feedback Type	Channel A (FB0) Device Sel	Channel B (FB1) Device Sel (if different)	Channel A Terminals	Channel B Terminals
Not Specified	None (0)		N/A	
Digital AqB Note: This row only applies if both channels of the UFB **Are Not** simultaneously configured to Feedback Type = "Digital AqB"	Inc A B Z (12)		-A, A, -B, B, -Z, Z	
Digital AqB Note: This row only applies if both channels of the UFB **Are** configured to Feedback Type = "Digital AqB"	Inc A B Z (12)	Inc SC (13)	-A, A, -B, B, -Z, Z	Sine (-), Sine (+), Cosine (-), Cosine (+) **Note: No Z (marker) input available.**
Sine/Cosine	SinCos Only (11)		Sine (-), Sine (+), Cosine (-), Cosine (+)	
Hiperface	Hiperface SC (2)		Sine (-), Sine (+), Cosine (-), Cosine (+), -Xd, +Xd	
EnDat 2.1	EnDat SC (1)		Sine (-), Sine (+), Cosine (-), Cosine (+), -Xc, +Xc, -Xd, +Xd	
EnDat 2.2	EnDat FD ChX (5)	EnDat FD ChY (6)	-Xc, +Xc, -Xd, +Xd	-Yc, +Yc, -Yd, +Yd
SSI (Rotary)	SSI SC (4)		Sine (-), Sine (+), Cosine (-), Cosine (+), -Xc, +Xc, -Xd, +Xd	
SSI (Linear)	LinSSI ChX (18)	LinSSI ChY (19)	-Xc, +Xc, -Xd, +Xd	-Yc, +Yc, -Yd, +Yd
SSI (Full Rotary Digital)	SSI FD ChX	SSI FD ChY	-Xc, +Xc, -Xd, +Xd	-Yc, +Yc, -Yd, +Yd
Stahl SSI	LinStahl ChX (16)	LinStahl ChY (17)	-Xc, +Xc, -Xd, +Xd	-Yc, +Yc, -Yd, +Yd

Although the 20-750-UFB-1 module ostensibly supports two feedback channels, there are many combinations of device types that do not work and result in an error state on the module if they are configured.

See the Feedback Options table located in the PowerFlex 750-Series AC Drives Technical Data, publication 750-TD001, for compatible and non-compatible combinations.

Non-compatible selections lead to a Configuration Conflict (Type 2 Alarm): Bit 20 "FB0FB1 Cflct" of parameter 1 [Module Status] is set.

Torque Prove and Brake Slip Detect

ATTENTION: Loss of control in suspended load applications can cause personal injury and/or equipment damage. The drive or a mechanical brake must always control the load. TorqProve™ is designed for lifting/torque prove applications. It is the responsibility of the engineer and/or end user to configure drive parameters, test any lifting functionality and meet safety requirements in accordance with all applicable codes and standards.

ATTENTION: When enabling the Torque Prove/Brake Slip detection, the axis application type must be Constant Speed, Tracking, or Custom with Velocity Integral enabled. Failure to do so results in unstable operation upon brake release, because torque pre-load is not applied.

ATTENTION: When being used as a positioning axis, the AxisName:MechanicalBrakeReleaseStatus bit must be monitored, along with a timer configured to compensate for brake release time, before a motion command can be performed after the initial MSO instruction. Failure to monitor the mechanical brake release status along with a timer to prevent motion can cause the axis to try to drive through a brake that has not been released. This may cause a Speed Deviation error and fault the axis on a Torque Prove fault. Another option would be to use a digital input as brake open if such a contact exists.

IMPORTANT The Stop Type Action cannot be set to Disable and Coast when using torque prove/brake slip detection.

IMPORTANT Do not use the MSO, MAJ, and MAM commands when running a TorqProve application without encoder feedback. Start the axis with the MDS instruction and stop the axis the with MSF instruction.

IMPORTANT Not all drive functions are accessible when used in an Integrated Motion on EtherNet/IP application.

Encoder Feedback Operation

Velocity Mode using the Motion Drive Start (MDS) Instruction to Operate the Axis

1. The MDS instruction is initiated. The following actions occur:
   - The axis is enabled.
   - The output phase loss is checked.
   - A torque command is preloaded from a previous move or from a customer-defined, preloaded value.
   - The torque current feedback is verified and the brake is commanded to release.
   - After the brake release time has expired, the axis velocity reference is released.

   The axis is now under control velocity command.
2. The Motion Servo Off (MSF) instruction is initiated and the brake prove routine begins.
   a. If the brake prove routine is successful, the power structure is disabled and the axis enters the Stopped state.
   b. If the brake has slipped, the axis issues a brake slip alarm and remains active. The axis can be restarted and the load can be lowered to a safe location. When the brake no longer slips after an MSF instruction, the Brake Malfunction fault occurs and requires a power cycle to clear the fault.
   c. If enabled, the Auto Sag routine issues a brake slip alarm and runs the Auto Sag routine.

      The Auto Sag routine repeatedly attempts to set the brake and check for slippage. When the load no longer slips, the power structure is disabled and a Brake Malfunction fault occurs. A power cycle is required to clear the fault. The Auto Sag routine cannot be interrupted.

Velocity or Position Modes using a Motion Servo On (MSO) and Move Instructions to Control the Axis

1. The MSO instruction is initiated. The following actions occur:
   - The axis is enabled.
   - An output phase loss is checked.
   - The torque command is preloaded from a previous move or from a customer-defined, preloaded value.
   - The torque current feedback is verified and a brake release command is issued.
   - Motion is enabled when the brake timer expires.
2. When the brake release timer has expired, motion can be allowed (for example, MAJ, MAM, and MAG).
3. Control the axis as desired for position or velocity.

4. An MSF instruction is initiated and the Brake Proving routine is started when desired.
   a. If the brake prove routine is successful, the power structure is disabled and the axis enters the Stopped state.
   b. If the brake has slipped, the axis issues a Brake Slip alarm and remains active. The axis can be restarted and the load lowered to a safe location. When the brake no longer slips after an MSF instruction, the Brake Malfunction fault occurs and requires a power cycle to clear the fault.
   c. If enabled, the Auto Sag routine issues a Brake Slip alarm and runs the Auto Sag routine.

      The Auto Sag routine repeatedly attempts to set the brake and check for slippage. When the load no longer slips, the power structure is disabled and a Brake Malfunction fault occurs. A power cycle is required to clear the fault. The Auto Sag routine cannot be interrupted.

Settings

Parameters to Configure Torque Prove, Brake Check, and Auto Sag

The following parameters are accessed via the Axis Properties -> Parameter List Category.

Table 31 - Axis Properties Parameters

Parameter Name	Description
AutoSagConfiguration	Enables the drive to control the load to a no slip condition by repeatedly attempting to set the brake and test for slip until the load no longer slips. If set to zero, the drive detects a brake slip and holds the load at zero speed.
AutoSagSlipIncrement	The distance in position/feedback units that the brake is allowed to slip before enabling the Auto Sag routine to control a brake slip event. An encoder is required to operate.
AutoSagStart	Enables the routine that monitors the encoder for brake slip when the power structure is disabled. If the brake slips more than the value of AutoSagSlipIncrement, the power structure is enabled and the Auto Sag routine begins. The AutoSagConfiguration parameter must also be enabled. AutoSagStart is not used when encoderless operation is enabled.
BrakeProveRampTime	The time that is required to ramp the torque reference from 100 % to zero during the brake slip test.
BrakeSlipTolerance	Sets the number of motor shaft revolutions allowed during the brake slippage test. Drive torque is reduced to check for brake slippage. When slippage occurs, the drive allows the number of motor shaft revolutions before regaining control. BrakeSlipTolerance is not used when encoderless operation is enabled.
BrakeTestTorque	Percentage of motor rated torque that is used to test the brake before releasing on the brake test. Any setting above 0 enables the brake test routine before releasing the brake for normal motion of the axis. BrakeTestTorque is only active with encoder feedback.
MechanicalBrakeEngageDelay	The time that is required for the brake to mechanically engage the system before the brake slip test begins in encoder feedback mode. In Encoderless, it is the time that the axis will remain active after the brake is commanded to set before the axis power structure is disabled

Table 31 - Axis Properties Parameters

Parameter Name	Description
MechanicalBrakeReleaseDelay	Time that is required for the mechanical brake to disengage after the command is issued.
ProvingConfiguration	Enables the Torque Prove/Mechanical Brake control/Brake Slip check routine within the Axis Power Structure.
ZeroSpeed	Percentage of axis motor rated velocity before setting the brake for the brake slip routine in encoder feedback mode. In encoderless operation, it is the point at which the brake is commanded to disengage when accelerating from zero speed and the point at which the brake sets when decelerating toward zero speed.
ZeroSpeedTime	Time the axis must be at or below zero speed before the brake is set in encoder feedback operation.

IMPORTANT When a system is configured for operation and the program is downloaded to the processor, the Speed Deviation Band is set to 0 and can cause a speed deviation fault with TorqProve when a move is attempted. To correct this error, an Enhanced Attribute message must be sent to the drive to configure it. Send a 'Real' value from 10…25% to Attribute 2724 decimal or AA4 Hex.

Encoderless Operation (Velocity or Frequency Sensorless Vector)

1. An MDS instruction is initiated (an MSO instruction is not allowed in encoderless operation).
   - The axis is enabled.
   - An output phase loss is checked.
   - The velocity is increased until the value of ZeroSpeedTolerance is reached and the brake is released.
   - The torque current feedback is verified and a brake release command is issued.
   - After the brake release timer has expired, the axis velocity reference is released.
2. The axis is now under the control of a velocity command.

To stop the system, an MSF instruction must be initiated (a MAS instruction is not allowed in encoderless operation). The velocity ramps down until the value of ZeroSpeedTolerance is reached and the brake is set. Brake slip detection cannot be accomplished.

PowerFlex 755 Integrated Motion Using Firmware Revision 12.001 or Later

Add an I/O Module to a PowerFlex 755 Drive

You can add an I/O module to the drive Integrated Motion on EtherNet/IP connection when using PowerFlex 755 firmware revision 12.001 and later and Studio 5000 Logix Designer® version 28.00.02 or later. **The I/O module must be installed in Port 7 in the control pod of a frame 2 or larger PowerFlex 755 drive.**

Configure I/O Device Properties

Follow these basic steps to add and configure an I/O module for a PowerFlex 755 drive.

1. In the Module Definition dialog box for the drive, right-click and add an I/O module (new peripheral device) to Port 7.

   The I/O module has already been added to the drive in this example.

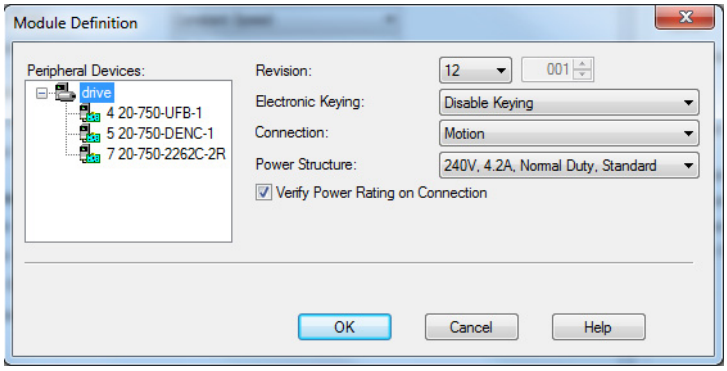

2. In the Module Properties dialog box for the drive, on the Digital Inputs tab, select the appropriate digital input functions.

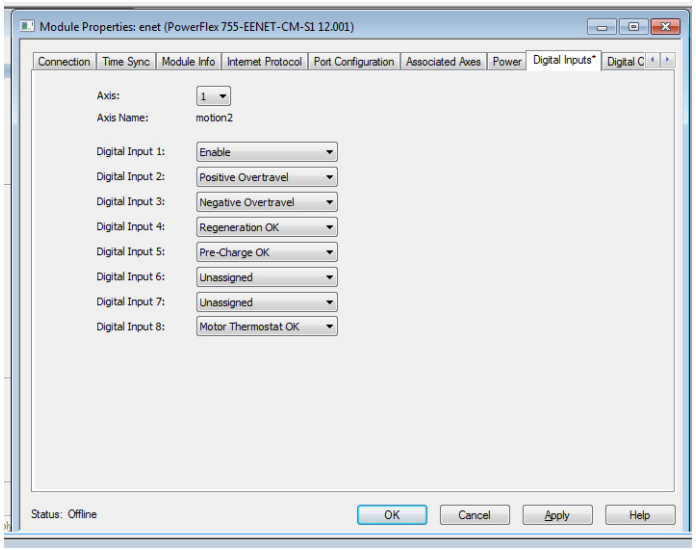

3. In the Module Properties dialog box for the drive, on the Digital Outputs tab, select the appropriate digital output functions.

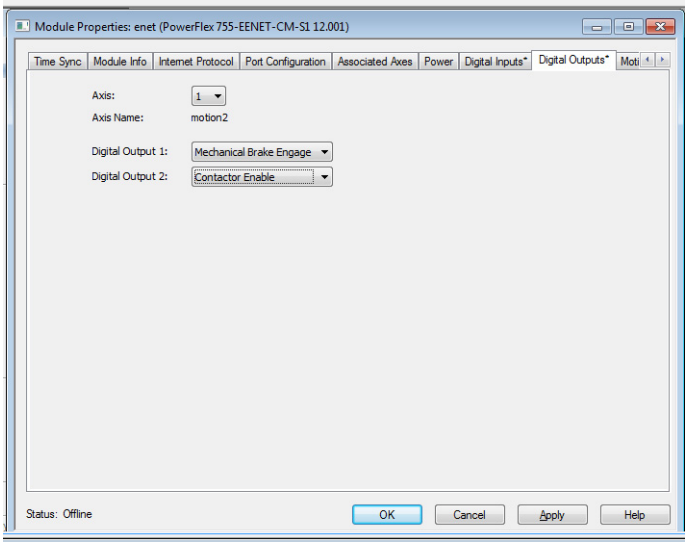

Configure 20-bit or 24-bit Motor Feedback Device Resolution

You can configure 20-bit or 24-bit effective resolution for the following feedback devices:

- Hiperface
- Heidenhain SC
- SSI SC

Set the desired effective resolution on the Motor Feedback tab of the Axis Properties dialog box for the axis associated with the drive. This feature is available in PowerFlex 755 firmware revision 12.001 and later and Studio 5000 Logix Designer® version 28.00.02 or later.

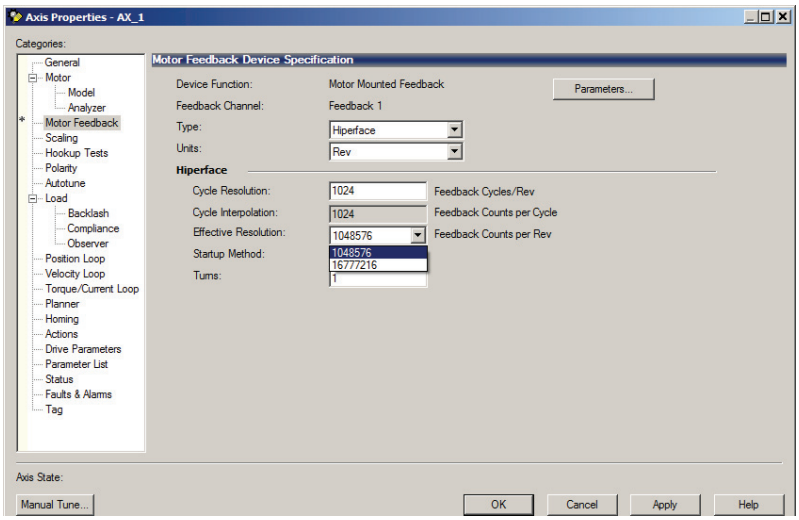

Parameter / Instance Attribute Mapping

Table 32 provides the relationship between PowerFlex 755 drive parameters and the Integrated Motion on EtherNet/IP attributes. If a parameter is not listed, it is not accessible and its function is not available.

Table 32 - Parameter/Instance to Attribute Mapping

Drive		Integrated Motion
Parameter No.	**Parameter Name**	**Integrated Motion on EtherNet/IP Instance**
P1	Output Frequency	Output Frequency
P1	Output Frequency	Output Frequency, I/O Card
P5	Torque Cur Fdbk	Iq Current Feedback
P5	Torque Cur Fdbk	Torque Current Feedback, I/O Card
P6	Flux Cur Fdbk	Id Current Feedback
P7	Output Current	Output Current
P8	Output Voltage	Output Voltage
P9	Output Power	Output Power
P10	Output Powr Fctr	Output Power Factor, Sets Port 7
P11	DC Bus Volts	DC Bus Voltage
P12	DC Bus Memory	DC Bus Voltage - Nominal
P20	Rated Volts	Inverter Rated Output Voltage
P20	Rated Volts	Inverter Rated Output Voltage, Sets Port 7
P21	Rated Amps	Inverter Rated Output Current
P22	Rated kW	Inverter Rated Output Power
P25	Motor NP Volts	Motor Rated Voltage
P26	Motor NP Amps	Motor Rated Continuous Current
P27	Motor NP Hertz	Induction Motor Rated Frequency
P28	Motor NP RPM	Rotary Motor Rated Speed
P30	Motor NP Power	Motor Rated Output Power
P30	Motor NP Power	Motor Rated Output Power, Sets Port 7
P31	Motor Poles	Rotary Motor Poles
P36	Maximum Voltage	Maximum Voltage
P37	Maximum Freq	Maximum Frequency
P44	Flux Up Time	Flux Up Time
P50	Stability Filter	Stability Filter, I/O Card
P60	Start Acc Boost	Start Boost
P60	Start Acc Boost	Start Boost, I/O Card
P61	Run Boost	Run Boost
P62	Break Voltage	Break Voltage
P63	Break Frequency	Break Frequency
P65	VHz Curve	Frequency Control Method
P73	IR Voltage Drop	Induction Motor Stator Resistance
P74	Ixo Voltage Drop	Induction Motor Stator Leakage Reactance
P75	Flux Current Ref	Induction Motor Flux Current
P76	Total Inertia	Kj
P81	PM PriEnc Offset	Commutation Offset
P82	PM AltEnc Offset	PM Motor Alternate Encoder Offset, I/O Card
P86	PM CEMF Voltage	PM Motor Rotary Voltage Constant

Table 32 - Parameter/Instance to Attribute Mapping (continued)

Drive		Integrated Motion
Parameter No.	**Parameter Name**	**Integrated Motion on EtherNet/IP Instance**
P87	PM IR Voltage	PM Motor Resistance
P88	PM IXq Voltage	PM Motor Inductance
P89	PM IXd Voltage	PM Motor Inductance
P92	PM Vqs Reg Ki	PM Motor Vqs Regulator Integral Gain, I/O Card
P95	VCL Cur Reg BW	Kqp
P126	Pri Vel FdbkFltr	Feedback n Velocity Filter Taps
P155	DI Enable	Digital Input Configuration
P220	Digital In Sts	Digital Inputs
P305	Voltage Class	Bus Voltage Select
P306	Duty Rating	Duty Select
P309	SpdTrqPsn Mode A	Control Mode
P309	SpdTrqPsn Mode A	SLAT Configuration
P314	SLAT Err Stpt	SLAT Set Point
P315	SLAT Dwell Time	SLAT Time Delay
P370	Stop Mode A	Stopping Mode
P372	Bus Reg Mode A	Bus Regulator Action
P375	Bus Reg Level	Bus Regulator Reference
P382	DB Resistor Type	Shunt Regulator Resistor Type
P383	DB Ext Ohms	External Shunt Resistance
P384	DB Ext Watts	External Shunt Power
P385	DB ExtPulseWatts	External Shunt Pulse Power
P388	Flux Braking En	Flux Braking Enable
P394	DC Brake Level	DC Injection Brake Current
P395	DC Brake Time	DC Injection Brake Time
P412	Mtr OL Alarm Lvl	Motor Thermal Overload User Limit
P413	Mtr OL Factor	Motor Overload Limit
P418	Mtr OL Counts	Motor Capacity
P420	Drive OL Mode	Inverter Overload Action
P422	Current Limit 1	Motor Rated Peak Current
P426	Regen Power Lmt	Regenerative Power Limit
P436	Shear Pin1 Level	Overtorque Limit
P437	Shear Pin 1 Time	Overtorque Limit Time
P442	Load Loss Level	Undertorque Limit
P443	Load Loss Time	Undertorque Limit Time
P445	Out PhaseLossLvl	Output Phase Loss Level
P450	Pwr Loss Mode A	Power Loss Action
P451	Pwr Loss A Level	Power Loss Threshold
P452	Pwr Loss A Time	Power Loss Time
P461	UnderVltg Level	Bus Undervoltage User Limit
P520	Max Fwd Speed	Velocity Limit - Positive
P521	Max Rev Speed	Velocity Limit - Negative
P524	Overspeed Limit	Motor Overspeed User Limit
P526	Skip Speed 1	Skip Speed 1

Table 32 - Parameter/Instance to Attribute Mapping (continued)

Drive		Integrated Motion
Parameter No.	**Parameter Name**	**Integrated Motion on EtherNet/IP Instance**
P527	Skip Speed 2	Skip Speed 2
P528	Skip Speed 3	Skip Speed 3
P529	Skip Speed Band	Skip Speed Band
P535	Accel Time 1	Ramp Acceleration
P537	Decel Time 1	Ramp Deceleration
P540	S Curve Accel	Ramp Jerk Control
P541	S Curve Decel	Ramp Jerk Control
P546	Spd Ref A Stpt	Velocity Feedforward Command
P549	Spd Ref A Mult	Kvff
P597	Final Speed Ref	Velocity Reference
P601	Trim Ref A Stpt	Velocity Trim
P620	Droop RPM at FLA	Kdr
P621	Slip RPM at FLA	Induction Motor Rated Slip Speed
P635	Spd Options Ctrl	Velocity Integrator Control
P639	SReg FB Fltr BW	Feedback n Velocity Filter Bandwidth
P641	Speed Error	Velocity Error
P643	SpdReg AntiBckup	Knff
P644	Spd Err Fltr BW	Velocity Low Pass Filter Bandwidth
P645	Speed Reg Kp	Kvp
P647	Speed Reg Ki	Kvi
P652	SReg Trq Preset	Velocity Integrator Preload
P654	Spd Reg Int Out	Velocity Integrator Output
P659	SReg OutFltr BW	Torque Lead Lag Filter Bandwidth
P660	SReg Output	Velocity Loop Output
P670	Pos Torque Limit	Torque Limit - Positive
P671	Neg Torque Limit	Torque Limit - Negative
P685	Selected Trq Ref	Torque Reference
P686	Torque Step	Torque Trim
P687	Notch Fltr Freq	Torque Notch Filter Frequency
P689	Filtered Trq Ref	Torque Reference - Filtered
P690	Limited Trq Ref	Torque Reference - Limited
P696	Inertia Acc Gain	Kaff
P697	Inertia Dec Gain	Kaff
P704	InAdp LdObs Mode	Load Observer Configuration
P705	Inertia Adapt BW	Feedback n Accel Filter Bandwidth
P706	InertiaAdaptGain	Kof
P707	Load Estimate	Load Observer Torque Estimate
P708	InertiaTrqAdd	Load Observer Acceleration Estimate
P708	InertiaTrqAdd	Total Inertia Estimate
P711	Load Observer BW	Kop
P721	Position Control	Position Integrator Control
P723	Psn Command	Position Reference
P756	Interp Psn Input	Controller Position Command - Float
P757	Interp Vel Input	Controller Velocity Command

Table 32 - Parameter/Instance to Attribute Mapping (continued)

Drive		Integrated Motion
Parameter No.	**Parameter Name**	**Integrated Motion on EtherNet/IP Instance**
P758	Interp Trq Input	Controller Torque Command
P759	Interp Psn Out	Fine Command Position
P760	Interp Vel Out	Fine Command Velocity
P761	Interp Trq Out	Torque Command
P821	Psn Offset 1	Position Trim
P830	PsnNtchFltrFreq	Position Notch Filter Frequency
P833	Psn Out FltrGain	Position Lead Lag Filter Gain
P834	Psn Out Fltr BW	Position Lead Lag Filter Bandwidth
P835	Psn Error	Position Error
P837	Psn Load Actual	Position Integral Feedback
P838	Psn Reg Ki	Kpi
P839	Psn Reg Kp	Kpp
P842	PsnReg IntgrlOut	Position Integrator Output
P843	PsnReg Spd Out	Position Loop Output
P847	Psn Fdbk	Position Feedback
P940	Drive OL Count	Inverter Capacity (See See Motor Overload on page 533)
P942	IGBT Temp C	Inverter Temperature
P944	Drive Temp C	Inverter Heatsink Temperature
P945	At Limit Status	At Limit Status
P1100, Bit 0	Trq Prv Cfg/TP Enable	Proving Configuration
P1100, Bit 6	Trq Prv Cfg/BrkSlipStart	Auto Sag Start
P1100, Bit 9	Trq Prv Cfg/BrkSlp SpdLmt	Auto Sag Config
P1104	Trq Lmt SlewRate	Brake Prove Ramp Time
P1107	Brk Release Time	Mechanical Brake Release Delay
P1108	Brk Set Time	Mechanical Brake Engage Delay
P1109	Brk Alarm Travel	Auto Sag Slip Increment
P1110	Brk Slip Count	Brake Slip Tolerance
P1111	Float Tolerance	Zero Speed
P1113	ZeroSpdFloatTime	Zero Speed Time
P1114	Brake Test Torq	Brake Test Torque

Motor Overload

There is a difference between how Kinetix handles an overload condition compared to the PowerFlex755 drive. Kinetix is motor capacity whereas PowerFlex 755 is motor overload.

The Motion attribute, Inverter Capacity, is a real-time estimate of the continuous rated motor thermal capacity that is used during operation, which is based on the motor thermal model. A value of 100 % indicates that the motor is being used at 100 % of rated capacity as determined by the continuous current rating of the motor.

The PowerFlex 755 parameter 940 [Drive OL Count] indicates power unit overload (I^2T) in percentage. The value of this parameter remains at 0 until 100 % of Rated Current is reached. At 100 % of Rated Current, Overload measurement begins and the power unit overload fault occurs.

Positive and Negative Overtravel Input

When the PowerFlex 755 drive is in integrated motion mode, Logix allows configuration of the Positive or Negative Overtravel inputs on an I/O module in Port 7 of the drive. After the inputs are configured in the drive firmware, if the Positive or Negative Overtravel Input is activated, the drive firmware generates a Positive or Negative Overtravel fault. When the fault occurs the drive axis coasts to a stop. This fault action is not configurable.

Pre-charge OK Input

This feature extends the precharge input monitoring capability to the PowerFlex 755 drive in integrated motion. The event processing is as follows:

1. If the configured Pre-charge OK Input becomes inactive and the drive is in the Stopped state, the drive enters the precharge state.
2. If the configured Pre-charge OK input becomes inactive and the drive is in the Running state, the drive generates the Converter Pre-charge Input Deactivated exception and performs a Fault Coast Stop.

Brake Output

This feature provides for the configuration of the Brake Output functionality via a relay output to the PowerFlex 755 in integrated motion only.

Regeneration OK Input

This feature adds the Regeneration OK Input functionality to the PowerFlex 755 drive in integrated motion only.

When the drive detects the Regeneration OK Input transition to an 'inactive' state, the drive generates the Regeneration Power-supply Failure exception and coasts to a stop, if in motion. The exception cannot be configured and is assigned Stop Drive only.

Contactor Enable Output

A Contactor Enable Output can be configured in the PowerFlex 755 drive in integrated motion only. The operation of this output is tied to fault processing in the drive. The drive de-energizes the Contactor Enable Output when an exception causes the axis to go to the 'shut down' state.

Note: This configuration is only valid when an auxiliary power supply is used for control power with frames 1...7 drives or when a 24 auxiliary power supply is used on frames 8...10 drives.

Analog Input and Output

This feature requires the drive firmware to map analog inputs and outputs on configured I/O modules (installed in Port 7) for use in Studio 5000 Logix Designer® by using the existing attributes. Access to the analog data is available by selecting the attributes in the Axis Properties - Drive Parameters tab of the axis.

The PowerFlex 755 drive has two Analog Outputs that are available for use.

Digital Input and Output

This feature requires the drive firmware to map digital inputs and outputs on configured I/O modules (installed in Port 7) for use in Studio 5000 Logix Designer® by using existing attributes. Access to the digital data is available by selecting the attributes in the Axis Properties - Drive Parameters tab of the axis.

Motor Thermostat Input

Motor thermostat input functionality is provided through the motor thermostat input (PTC) on the 22-Series I/O modules (installed in Port 7) when in Integrated Motion on EtherNet/IP mode.

The functionality is the same as the motor thermostat functionality in parameter mode. When the PTC input resistance transitions from low to high at the design temperature, the drive issues a motor over temperature fault, 18 [Motor PTC Trip].

The functionality supports the current motor thermostat range for status trip and reset in parameter mode. However, this functionality is not suitable for Allen-Bradley® MPL and MPM motors due to the varying hardware capacities and thermostat ranges of the Kinetix and 22-Series I/O modules.

SSI Rotary Full Digital Feedback

IMPORTANT See Knowledgebase, article 745654, before using this functionality.

Integrated motion supports SSI Rotary Full Digital Feedback types. The drive also supports these feedback devices that are connected to the Universal Feedback module (20-750-UFB-1) in parameter mode. This feedback type can now be configured for use with the PowerFlex 755 drive in integrated motion. Configuration of the new feedback type is accessible from the Axis Properties - Feedback tab.

24-bit Device Feedback Configuration

The PowerFlex 755 drive supports 24-bit resolution configuration for the following feedback types in parameter mode:

- Sine/Cosine (rotary and linear)
- Hiperface (rotary only)
- EnDat Sine/Cosine (rotary only)
- EnDat Digital (rotary only)
- SSI SC (rotary only)

The feature allows these feedback types to be configured for 24-bit effective resolution in integration motion mode. The 24-bit effective resolution configuration is accessible from the Axis Properties - Feedback tab.

Enhanced Attributes

Enhanced attributes are accessed via an MSG instruction in RSLogix 5000. These values are the same for all enhanced attribute writes. Only the Attribute number and Source Element changes.

IMPORTANT Execute message commands each time the Integrated Motion on the EtherNet/IP network connection is established. Message commands are necessary because the controller defaults all drive parameters when it establishes the Integrated Motion on the EtherNet/IP network connection.

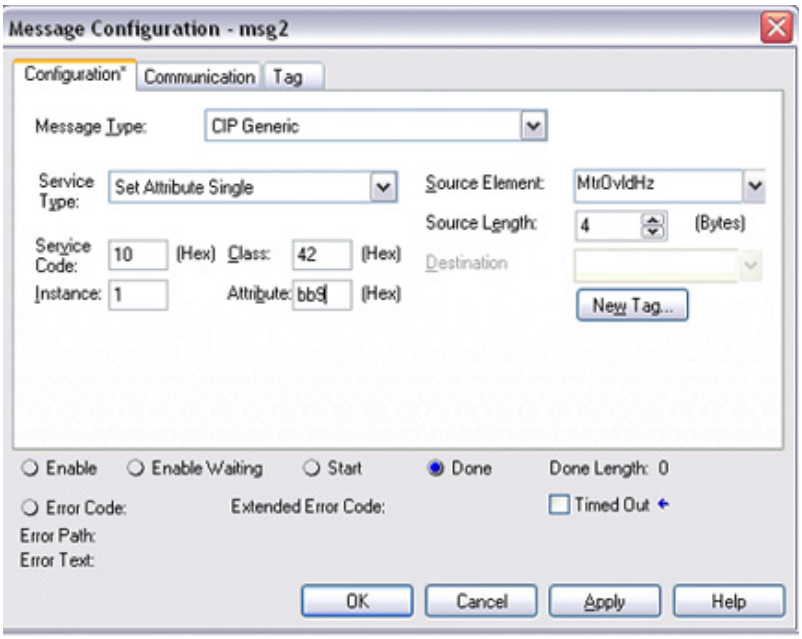

- Message Type - Choose CIP Generic.
- Service Type or Service Code - Choose the source or enter the hex value for the service that is performed on the specified object. 10 (hex) for Set Attribute Single, or 0E (hex) for Get Attribute Single.
- Class - Enter the hex value for the type or class of object to which the service is sent. 42 (hex) for Motion Device Axis Object.
- Instance - Enter the instance of the object to which the service is sent. Always a 1 for drive instance.
- Attribute - Enter the hex value of the attribute of the object to which the service is sent.
- Source Element Pull-down Menu - Choose a local source tag that contains more service parameters and/or data that is sent with the set request. For a get request, this field appears dimmed.
- Source Length - Enter or choose the number of bytes of data from the source tag that is included with the set request. For a get request, this field appears dimmed.
- Destination Pull-down Menu - Choose a local destination tag to receive the result of a get request. For a set request, this field is appears dimmed.

Drive Parameter / Enhanced Attribute Mapping

Table 33 - PowerFlex 755 Drive Parameter Numeric Order

Drive		Integrated Motion			
Parameter No.	**Parameter Name**	**Base 10**	**Base 16**	**Enhanced Attribute**	**Data Type**
38	PWM Frequency	604	25C	PWM Frequency	Real
40, Bit 3	Mtr Option Cfg/Encls Trq Prov	2723	AA3	Encoderless Torque Prove	SINT
40, Bit 10	Mtr Options Cfg	2740	AB4	Motor Options Cfg, DB While Stop	SINT
64	SVC Boost Filter	3000	BB8	SVC Boost Filter	Real
80	PM Cfg	2600	A28	PM Test Cfg	INT
83	PM OfstTst Cur	3004	BBC	PM OfstTst Cur	Real
91	PM Vqs Reg Kp	3005	BBD	PM Vqs Reg Kp	Real
92	PM Vqs Reg Ki	3006	BBE	PM Vqs Reg Ki	Real
93	PM Dir Test Cur	3003	BBB	PM Dir Test Cur	Real
95	VCL Cur Reg BW	554	22A	kQP	Real
96	VCL Cur Reg Kp	2685	A7D	VCL Cur Reg Kp	Real
97	VCL Cur Reg Ki	2686	A7E	VCL Cur Reg Ki	Real
98	VEncdls FReg Kp	2687	A7F	VEncdls FReg Kp	Real
99	VEncdls FReg Ki	2688	A80	VEncdls FReg Ki	Real
100	Slip Reg Enable	2689	A81	Slip Reg Enable	Real
101	Slip Reg Ki	2602	A2A	Slip Reg Ki	Real
102	Slip Reg Kp	2603	A2B	Slip Reg Kp	Real
103	Flux Reg Enable	2690	A82	Flux Reg Enable	DINT
104	Flux Reg Ki	2691	A83	Flux Reg Ki	Real
105	Flux Reg Kp	2692	A84	Flux Reg Kp	Real
106	Trq Adapt Speed	2693	A85	Trq Adapt Speed	Real
107	Trq Adapt En	2694	A86	Trq Adapt En	DINT
108	Phase Delay Comp	2695	A87	Phase Delay Comp	Real
109	Trq Comp Mode	2696	A88	Trq Comp Mode	DINT
110	Trq Comp Mtring	2697	A89	Trq Comp Mtring	Real
111	Trq Comp Regen	2698	A8A	Trq Comp Regen	Real
112	Slip Adapt Iqs	2699	A8B	Slip Adapt Iqs	Real
113	SFAdapt SlewLmt	2700	A8C	SFAdapt SlewLmt	Real
114	SFAdapt SlewRate	2701	A8D	SFAdapt SlewRate	Real
115	SFAdapt CnvrgLvl	2702	A8E	SFAdapt CnvrgLvl	Real
116	SFAdapt CnvrgLmt	2703	A8F	SFAdapt CnvrgLmt	Real
321	Prchrg Control	2619	A3B	Prchrg Control	DINT
322	Prchrg Delay	2620	A3C	Prchrg Delay	Real
357	FS Gain	2604	A2C	FS Gain	Real
358	FS Ki	2605	A2D	FS Ki	Real
376	Bus Limit Kp	2606	A2E	Bus Limit Kp	Real
377	Bus Limit Kd	2607	A2F	Bus Limit Kd	Real
380	Bus Reg Ki	2608	A30	Bus Reg Ki	Real
381	Bus Reg Kp	2609	A31	Bus Reg Kp	Real
390	Flux Braking Ki	2610	A32	Flux Braking Ki	Real

Drive		Integrated Motion			
Parameter No.	**Parameter Name**	**Base 10**	**Base 16**	**Enhanced Attribute**	**Data Type**
391	Flux Braking Kp	2611	A33	Flux Braking Kp	Real
396	DC Brake Ki	2612	A34	DC Brake Ki	Real
397	DC Brake Kp	2613	A35	DC Brake Kp	Real
400	Fast Braking Ki	2614	A36	Fast Braking Ki	Real
401	Fast Braking Kp	2615	A37	Fast Braking Kp	Real
414	Mtr OL Hertz	3001	BB9	Motor Overload Hertz	Real
428	Current Limit Kd	2616	A38	Current Limit Kd	Real
429	Current Limit Ki	2617	A39	Current Limit Ki	Real
430	Current Limit Kp	2618	A3A	Current Limit Kp	Real
467	Ground Warn Lvl	3002	BBA	Converter Ground Current User Limit	Real
469	PredMaint Sts	2625	A41	PredMaint Sts	INT
470	PredMaintAmbTemp	2626	A42	PredMaintAmbTemp	Real
471	PredMaint Rst En	2627	A43	PredMaint Rst En	DINT
472	PredMaint Reset	2628	A44	PredMaint Reset	DINT
488	HSFan Derate	2629	A45	HSFan Derate	Real
489	HSFan TotalLife	2630	A46	HSFan TotalLife	DINT
490	HSFan ElpsdLife	2631	A47	HSFan ElpsdLife	DINT
491	HSFan RemainLife	2632	A48	HSFan RemainLife	DINT
492	HSFan EventLevel	2633	A49	HSFan EventLevel	Real
493	HSFan EventActn	2634	A4A	HSFan EventActn	DINT
494	HSFan ResetLog	2635	A4B	HSFan ResetLog	DINT
495	InFan Derate	2636	A4C	InFan Derate	Real
496	InFan TotalLife	2637	A4D	InFan TotalLife	DINT
497	InFan ElpsdLife	2638	A4E	InFan ElpsdLife	DINT
498	InFan RemainLife	2639	A4F	InFan RemainLife	DINT
499	InFan EventLevel	2640	A50	InFan EventLevel	Real
500	InFan EventActn	2641	A51	InFan EventActn	DINT
501	InFan ResetLog	2642	A52	InFan ResetLog	DINT
502	MtrBrngTotalLife	2643	A53	MtrBrngTotalLife	DINT
503	MtrBrngElpsdLife	2644	A54	MtrBrngElpsdLife	DINT
504	MtrBrngRemainLif	2645	A55	MtrBrngRemainLif	DINT
505	MtrBrngEventLvl	2646	A56	MtrBrngEventLvl	Real
506	MtrBrngEventActn	2647	A57	MtrBrngEventActn	DINT
507	MtrBrng ResetLog	2648	A58	MtrBrng ResetLog	DINT
508	MtrLubeElpsdHrs	2649	A59	MtrLubeElpsdHrs	DINT
509	MtrLubeEventLvl	2650	A5A	MtrLubeEventLvl	Real
510	MtrLubeEventActn	2651	A5B	MtrLubeEventActn	DINT
511	MchBrngTotalLife	2652	A5C	MchBrngTotalLife	DINT
512	MchBrngElpsdLife	2653	A5D	MchBrngElpsdLife	DINT
513	MchBrngRemainLif	2654	A5E	MchBrngRemainLif	DINT
514	MchBrngEventLvl	2655	A5F	MchBrngEventLvl	Real
515	MchBrngEventActn	2656	A60	MchBrngEventActn	DINT
516	MchBrngResetLog	2657	A61	MchBrngResetLog	DINT
517	MchLubeElpsdHrs	5658	A62	MchLubeElpsdHrs	DINT

Drive		Integrated Motion			
Parameter No.	**Parameter Name**	**Base 10**	**Base 16**	**Enhanced Attribute**	**Data Type**
518	MchLube EventLvl	2659	A63	MchLube EventLvl	Real
519	MchLubeEventActn	2660	A64	MchLubeEventActn	DINT
642	Servo Lock Gain	2721	AA1	Servo Lock Gain	Real
665	Speed Comp Sel	2621	A3D	Speed Comp Sel	DINT
676	Trq Ref A Stpt	2728	AA8	Trq Ref A Stpt	Real
681	Trq Ref B Stpt	2729	AA9	Trq Ref B Stpt	Real
832	Psn Out Fltr Sel	2622	A3E	Psn Out Fltr Sel	DINT
833	Psn Out FltrGain	2623	A3F	Psn Out FltrGain	Real
834	Psn Out Fltr BW	2624	A40	Psn Out Fltr BW	Real
935	Drive Status 1	2741	AB5	Drive Status 1	DINT
970	Testpoint Sel 1	2661	A65	Testpoint Sel 1	DINT
971	Testpoint Fval 1	2662	A66	Testpoint Fval 1	Real
972	Testpoint Lval 1	2663	A67	Testpoint Lval 1	DINT
974	Testpoint Sel 2	2664	A68	Testpoint Sel 2	DINT
975	Testpoint Fval 2	2665	A69	Testpoint Fval 2	Real
976	Testpoint Lval 2	2666	A6A	Testpoint Lval 2	DINT
978	Testpoint Sel 3	2667	A6B	Testpoint Sel 3	DINT
979	Testpoint Fval 3	2668	A6C	Testpoint Fval 3	Real
980	Testpoint Lval 3	2669	A6D	Testpoint Lval 3	DINT
982	Testpoint Sel 4	2670	A6F	Testpoint Sel 4	DINT
983	Testpoint Fval 4	2671	A6F	Testpoint Fval 4	Real
984	Testpoint Lval 4	2672	A70	Testpoint Lval 4	DINT
1035	PkDtct Stpt Real	2673	A71	PkDtct Stpt Real	Real
1036	PkDtct Stpt DInt	2674	A72	PkDtct Stpt DInt	DINT
1037	PkDtct1 In Sel	2675	A73	PkDtct1 In Sel	DINT
1038	PkDtct1PresetSel	2676	A74	PkDtct1PresetSel	DINT
1039	Peak1 Cfg	2677	A75	Peak1 Cfg	INT
1040	Peak 1 Change	2678	A76	Peak 1 Change	INT
1041	PeakDetect1 Out	2679	A77	PeakDetect1 Out	Real
1042	PkDtct2 In Sel	2680	A78	PkDtct2 In Sel	DINT
1043	PkDtct2PresetSel	2681	A79	PkDtct2PresetSel	DINT
1044	Peak2 Cfg	2682	A7A	Peak2 Cfg	INT
1045	Peak 2 Change	2683	A7B	Peak 2 Change	INT
1046	PeakDetect2 Out	2684	A7C	PeakDetect2 Out	Real
1100, Bit 3	Trq Prove Cfg / Preload	2727	AA7	Trq Prove Cfg / Preload	SINT
1100, Bit 4	Trq Prove Cfg / FW Load Limit	2731	AAB	Trq Prove Cfg / FW Load Limit	SINT
1100, Bit 10	Trq Prove Cfg / BrkSlpFltCfg	2730	AAA	Trq Prove Cfg / BrkSlpFltCfg	SINT
1103	Trq Prove Status	2722	AA2	Trq Prove Status	INT
1105	Speed Dev Band	2724	AA4	Speed Dev Band	Real
1106	SpdBand Intgrtr	2725	AA5	SpdBand Intgrtr	Real
1535	VB Config	2704	A90	VB Config	INT
1536	VB Status	2705	A91	VB Status	INT

Drive		Integrated Motion			
Parameter No.	**Parameter Name**	**Base 10**	**Base 16**	**Enhanced Attribute**	**Data Type**
1537	VB Voltage	2706	A92	VB Voltage	Real
1538	VB Time	2707	A93	VB Time	Real
1539	VB Minimum	2708	A94	VB Minimum	Real
1540	VB Maximum	2709	A95	VB Maximum	Real
1541	VB Accel Rate	2710	A96	VB Accel Rate	Real
1542	VB Decel Rate	2711	A97	VB Decel Rate	Real
1543	VB Frequency	2712	A98	VB Frequency	Real
1544	VB Min Freq	2713	A99	VB Min Freq	Real
1545	VB Flux Thresh	2714	A9A	VB Flux Thresh	Real
1546	VB Flux Lag Freq	2715	A9B	VB Flux Lag Freq	Real
1547	VB Filt Flux Cur	2716	A9C	VB Filt Flux Cur	Real
1548	VB Current Rate	2717	A9D	VB Current Rate	Real
1549	VB Current Hyst	2718	A9E	VB Current Hyst	Real
1550	VB Cur Thresh	2719	A9F	VB Cur Thresh	Real
1551	VB Rate Lag Freq	2720	AA0	VB Rate Lag Freq	Real

Inverter Parameter / Enhanced Attribute Mapping

Table 34 - PowerFlex 755 Inverter Parameter Numeric Order

Drive		Integrated Motion			
Parameter No.	**Parameter Name**	**Base 10**	**Base 16**	**Enhanced Attribute**	**Data Type**
1	Sys Rated Amps	2855	B27	Sys Rated Amps	Real
2	Sys Rated Volts	2856	B28	Sys Rated Volts	Real
3	I1 Rated Amps	2857	B29	Ix1 Rated Amps	Real
4	I2 Rated Amps	2858	B2A	Ix2 Rated Amps	Real
5	I3 Rated Amps	2859	B2B	Ix3 Rated Amps	Real
10	Online Status	2862	B2E	Online Status	INT
12	Fault Status	2863	B2F	Fault Status	INT
13	Alarm Status	2864	B30	Alarm Status	INT
18	Ground Current	2865	B31	Ground Current	Real
20	Recfg Acknowledg	2866	B32	Recfg Acknowledg	DINT
21	Effctv I Rating	2867	B33	Effctv I Rating	Real
30	Testpoint Sel 1	2868	B34	Testpoint Sel 1	DINT
31	Testpoint Val 1	2869	B35	Testpoint Val 1	Real
32	Testpoint Sel 2	2870	B36	Testpoint Sel 2	DINT
33	Testpoint Val 2	2871	B37	Testpoint Val 2	Real

Converter Parameter / Enhanced Attribute Mapping

Table 35 - PowerFlex 755 Converter Parameter Numeric Order

Drive		Integrated Motion			
Parameter No.	**Parameter Name**	**Base 10**	**Base 16**	**Enhanced Attribute**	**Data Type**
1	Sys Rated Amps	2905	B59	Sys Rated Amps	Real
2	Sys Rated Volts	2906	B5A	Sys Rated Volts	Real
3	C1 Rated Amps	2907	B5B	CX1 Rated Amps	Real
4	C2 Rated Amps	2908	B5C	CX2 Rated Amps	Real
5	C3 Rated Amps	2909	B5D	CX3 Rated Amps	Real
10	Online Status	2912	B60	Online Status	INT
12	Fault Status	2913	B61	Fault Status	INT
13	Alarm Status	2914	B62	Alarm Status	INT
25	Gate Board Temp	2916	B64	Gate Board Temp	Real
30	Testpoint Sel 1	2917	B65	Testpoint Sel 1	DINT
31	Testpoint Val 1	2918	B66	Testpoint Val 1	Real
32	Testpoint Sel 2	2919	B67	Testpoint Sel 2	DINT
33	Testpoint Val 2	2920	B68	Testpoint Val 2	Real

Precharge Parameter / Enhanced Attribute Mapping

Table 36 - PowerFlex 755 Common Bus Precharge Parameter Numeric Order

Drive		Integrated Motion			
Parameter No.	**Parameter Name**	**Base 10**	**Base 16**	**Enhanced Attribute**	**Data Type**
1	Sys Rated Amps	2955	B8B	Sys Rated Amps	Real
2	Sys Rated Volts	2956	B8C	Sys Rated Volts	Real
3	P1 Rated Amps	2957	B8D	PX1 Rated Amps	Real
4	P2 Rated Amps	2958	B8E	PX2 Rated Amps	Real
5	P3 Rated Amps	2959	B8F	PX3 Rated Amps	Real
10	Online Status	2962	B92	Online Status	INT
12	Fault Status	2963	B93	Fault Status	INT
13	Alarm Status	2964	B94	Alarm Status	INT
18	Main DC Bus Volt	2965	B95	Main DC Bus Volt	Real
25	Gate Board Temp	2966	B96	Gate Board Temp	Real
30	Testpoint Sel 1	2967	B97	Testpoint Sel 1	DINT
31	Testpoint Val 1	2968	B98	Testpoint Val 1	Real
32	Testpoint Sel 2	2969	B99	Testpoint Sel 2	DINT
33	Testpoint Val 2	2970	B9A	Testpoint Val 2	Real

Encoder Parameter / Enhanced Attribute Mapping

Table 37 - Universal Feedback Encoder Module Output Parameter Numeric Order

Drive		Integrated Motion			
Parameter No.	**Parameter Name**	**Base 10**	**Base 16**	**Enhanced Attribute**	**Data Type**
80	Enc Out Sel	2800	AF0	Enc Out Sel	DINT
81	Enc Out Mode	2801	AF1	Enc Out Mode	DINT
82	Enc Out FD PPR	2802	AF2	Enc Out FD PPR	DINT
83	Enc Out Z Offset	2803	AF3	Enc Out Z Offset	DINT
84	Enc Out Z PPR	2804	AF4	Enc Out Z PPR	DINT
20, Bit 4	FB0 SSI Cfg	2805	AF5	FB0 SSI Cfg, Double Word Query	SINT
50, Bit 4	FB1 SSI Cfg	2806	AF6	FB1 SSI Cfg, Double Word Query	SINT

I/O Parameters

Table 38 - I/O Parameter Numeric Order

Drive		Integrated Motion			
Parameter No.	**Parameter Name**	**Base 10**	**Base 16**	**Enhanced Attribute**	**Data Type**
70	Anlg Out Type	2820	B04	Anlg Out Type	DINT

Faults

Table shows the correlation between PowerFlex 755 faults and the respective faults that are returned to the Logix controller and RSLogix 5000 software. The returned fault numbers and text are common with the Kinetix 6500.

Note: A fault code/message that is displayed on a HIM does not match what is returned to the Logix controller and potentially displayed on an HMI or viewed in RSLogix 5000 software.

Table 39 - PowerFlex 755 Drive Fault Numeric Order

PowerFlex 755 Drive		Integrated Motion on EtherNet/IP		
Event No.	**Fault Text**	**Code**	**Subcode**	**Fault Text**
0	No Entry	0	0	No Faults
2	Auxiliary Input	63	0	External Exception Input
3	Power Loss	37	0	Bus Power Loss
4	UnderVoltage	34	0	Bus Undervoltage User Limit
5	OverVoltage	35	0	Bus Overvoltage Factory Limit
7	Motor Overload	7	0	Motor Thermal Overload Factory Limit
8	Heatsink OvrTemp	11	1	Inverter Overtemperature Factory Limit
9	Trnsistr OvrTemp	11	2	Inverter Overtemperature Factory Limit
12	HW OverCurrent	10	1	Inverter Overcurrent
13	Ground Fault	16	0	Converter Ground Current Factory Limit
14	Ground Warning	17	0	Converter Ground Current User Limit
15	Load Loss	57	0	Undertorque Limit
17	Input Phase Loss	23	0	Converter AC Single Phase Loss
20	TorqPrv Spd Band	18	1	Torque Prove Failure
21	Output PhaseLoss	63	21	Product Specific
24	Decel Inhibit	19	0	Decel Override
25	OverSpeed Limit	4	0	Motor Overspeed User Limit
26	Brake Slipped	18	2	Torque Prove Failure
33	AuRsts Exhausted	63	33	Product Specific
36	SW OverCurrent	10	2	Inverter Overcurrent
38	Phase U to Gnd	24	1	Converter AC Phase Short
39	Phase V to Gnd	24	2	Converter AC Phase Short
40	Phase W to Gnd	24	3	Converter AC Phase Short
41	Phase UV Short	24	4	Converter AC Phase Short
42	Phase VW Short	24	5	Converter AC Phase Short
43	Phase WU Short	24	6	Converter AC Phase Short
44	Phase UNegToGnd	24	7	Converter AC Phase Short
45	Phase VNegToGnd	24	8	Converter AC Phase Short
46	Phase WNegToGnd	24	9	Converter AC Phase Short
48	System Defaulted	63	33	Product Specific
49	Drive Powerup	1	0	Module Reset
55	Ctrl Bd Overtemp	10	0	Control Module Overtemperature Factory Limit
61	Shear Pin 1	56	0	Overtorque Limit

Table 39 - PowerFlex 755 Drive Fault Numeric Order (continued)

PowerFlex 755 Drive		Integrated Motion on EtherNet/IP		
Event No.	**Fault Text**	**Code**	**Subcode**	**Fault Text**
64	Drive OverLoad	13	0	Converter Pre-charge Overload User Limit
71	Port 1 Adapter	63	71	Product Specific
72	Port 2 Adapter	63	72	Product Specific
73	Port 3 Adapter	63	73	Product Specific
74	Port 4 Adapter	63	74	Product Specific
75	Port 5 Adapter	63	75	Product Specific
76	Port 6 Adapter	63	76	Product Specific
77	IR Volts Range	21	1	Motor Test Failure
78	FluxAmpsRef Rang	21	2	Motor Test Failure
79	Excessive Load	21	3	Motor Test Failure
80	AutoTune Aborted	21	4	Motor Test Failure
81	Port 1 DPI Loss	63	81	Product Specific
82	Port 2 DPI Loss	63	82	Product Specific
83	Port 3 DPI Loss	63	83	Product Specific
84	Port 4 DPI Loss	63	84	Product Specific
85	Port 5 DPI Loss	63	85	Product Specific
86	Port 6 DPI Loss	63	86	Product Specific
87	IXo VoltageRange	21	5	Motor Test Failure
91	Pri VelFdbk Loss	45	255	Feedback Data Loss Factory Limit
93	Hw Enable Check	63	93	Product Specific
94	Alt VelFdbk Loss	45	255	Feedback Data Loss Factory Limit
95	Aux VelFdbk Loss	45	255	Feedback Data Loss Factory Limit
96	PositionFdbkLoss	45	255	Feedback Data Loss Factory Limit
100	Parameter Chksum	3	0	Nonvolatile Memory Checksum Fault
104	Pwr Brd Checksum	15	1	Power Board
106	Incompat MCB-PB	15	3	Power Board
107	Replaced MCB-PB	22	1	Hardware Configuration
111	PwrBd Invalid ID	15	2	Power Board
112	PwrBd App MinVer	15	4	Power Board
113	Tracking DataErr	22	2	Hardware Configuration
117	PwrDn Data Chksm	17	16	Option Storage Checksum
124	App ID Changed	23	1	Firmware Change
125	Using Backup App	23	2	Firmware Change
134	Start On PowerUp	63	134	Product Specific
137	Ext Prchrg Err	23	2	Converter Pre-Charge Failure
138	Precharge Open	23	3	Converter Pre-Charge Failure
141	Autn Enc Angle	21	6	Motor Test Failure
142	Autn Spd Rstrct	21	7	Motor Test Failure
143	Autotune CurReg	21	8	Motor Test Failure
144	Autotune Inertia	21	9	Motor Test Failure
145	Autotune Travel	21	10	Motor Test Failure
169	PWM Freq Reduced	16	0	PWM Frequency Reduced

Table 39 - PowerFlex 755 Drive Fault Numeric Order (continued)

PowerFlex 755 Drive		Integrated Motion on EtherNet/IP		
Event No.	**Fault Text**	**Code**	**Subcode**	**Fault Text**
170	CurLimit Reduced	17	0	Current Limit Reduced
177	Profiling Active	63	177	Product Specific
178	Homing Active	63	178	Product Specific
179	Home Not Set	63	179	Product Specific
203	Port 13 Adapter	63	203	Product Specific
204	Port 14 Adapter	63	204	Product Specific
205	DPI TransportErr	63	205	Product Specific
206	RTC Battery Fail	63	206	Product Specific
210	HW En Jumper Out	2	1	GuardConfigurationFault
211	Safety Brd Fault	9	0	GuardStopInputFault
212	Safety Jmpr Out	2	2	GuardConfigurationFault
213	Safety Jumper In	2	3	GuardConfigurationFault
224	Port 4 Comm Loss	63	224	Product Specific
225	Port 5 Comm Loss	63	225	Product Specific
226	Port 6 Comm Loss	63	226	Product Specific
227	Port 7 Comm Loss	63	227	Product Specific
228	Port 8 Comm Loss	63	228	Product Specific
229	Port 9 Comm Loss	63	229	Product Specific
244	Port 4 Cfg	16	4	Illegal Option Card
245	Port 5 Cfg	16	5	Illegal Option Card
246	Port 6 Cfg	16	6	Illegal Option Card
247	Port 7 Cfg	16	7	Illegal Option Card
248	Port 8 Cfg	16	8	Illegal Option Card
249	Port 9 Cfg	16	9	Illegal Option Card
264	Port 4 Checksum	17	4	Option Storage Checksum
265	Port 5 Checksum	17	5	Option Storage Checksum
266	Port 6 Checksum	17	6	Option Storage Checksum
267	Port 7 Checksum	17	7	Option Storage Checksum
268	Port 8 Checksum	17	8	Option Storage Checksum
269	Port 9 Checksum	17	9	Option Storage Checksum
280	Comm Loss Enet	1	0	Connection failure.
281	Enet Checksum	17	13	Option Storage Checksum
282	DLX Checksum	17	14	Option Storage Checksum
290	Prev Maint Reset	20	1	Preventative Maintenance
291	HSFan Life	20	2	Preventative Maintenance
292	InFan Life	20	3	Preventative Maintenance
293	MtrBrng Life	20	4	Preventative Maintenance
294	MtrBrng Lube	20	5	Preventative Maintenance
295	MachBrng Life	20	6	Preventative Maintenance
296	MachBrng Lube	20	7	Preventative Maintenance
307	Port7InvalidCard	63	307	Product Specific
308	Port8InvalidCard	63	308	Product Specific
310	Regeneration OK	15	0	Regen Power Supply

Table 39 - PowerFlex 755 Drive Fault Numeric Order (continued)

PowerFlex 755 Drive		Integrated Motion on EtherNet/IP		
Event No.	**Fault Text**	**Code**	**Subcode**	**Fault Text**
315	Excess Psn Err	4	0	Excessive Position Error
318	OutCurShare PhU	63	318	Product Specific
319	OutCurShare PhV	63	319	Product Specific
320	OutCurShare PhW	63	320	Product Specific
321	HS Temp Imbal	63	321	Product Specific
324	DC Bus Mismatch	63	324	Product Specific
325	Invalid Inv Cfg	63	325	Product Specific
326	Invalid Conv Cfg	63	326	Product Specific
331	Inv1 Comm Loss	63	331	Product Specific
341	Con1 Comm Loss	63	341	Product Specific

Encoderless Operation Errors on Configuration

When a system is configured for encoderless operation and the program is downloaded to the processor, the axis faults with a TorqProve configuration error (TP Encls Config alarm). To clear the configuration error, you must send an Enhanced Attribute message to the drive to configure it for encoderless operation by using a “SINT” tag value of 1 sent to Attribute 2723 Dec or AA3 Hex.

Also an Enhanced Attribute message to the drive to configure the brake speed deviation to zero must be used or a configuration error occurs. Send a ‘Real’ value of 0 to Attribute 2724 Dec or AA4 Hex to set the brake speed deviation to zero.

Additional Resources

The following documents contain more information on how to implement Integrated Motion on EtherNet/IP with PowerFlex 755 drives.

Integrated Motion on the Ethernet/IP Network User Manual
Publication Number: MOTION-UM003

Integrated Motion on the Ethernet/IP Network Reference Manual
Publication Number: MOTION-RM003

Logix5000 Controllers Design Considerations Reference Manual
Publication Number: 1756-RM094

A

Accel Time *n* (No. 535, 536) 118
Access Level (No. 301) 86
Active Cur Lmt (No. 424) 103
Active Vel Fdbk (No. 131) 71
Actual Home Psn (No. 737) 143
Actv SpTqPs Mode (No. 313) 89
Adapter Parameters 21
Adj Vltg AccTime (No. 1140) 189
Adj Vltg Command (No. 1139) 189
Adj Vltg Config (No. 1131) 188
Adj Vltg DecTime (No. 1141) 189
Adj Vltg Preset*n* (No. 1142…1148) 189
Adj Vltg Ref Hi (No. 1134) 188
Adj Vltg Ref Lo (No. 1135) 188
Adj Vltg RefMult (No. 1149) 189
Adj Vltg Scurve (No. 1150) 189
Adj Vltg Select (No. 1133) 188
Adj Vltg Trim Hi (No. 1137) 188
Adj Vltg Trim Lo (No. 1138) 188
Adj Vltg TrimPct (No. 1151) 189
Adj Vltg TrimSel (No. 1136) 188
Adjustable Voltage Control 188
  Invalid Reference 330
Adjustable Voltage Parameters 188
Advanced Parameter View 28
Alarm Information Parameters 173, 174, 175, 176
Alarm Status (No. 13)
  Converter 227, 232
  Inverter 223
Alarm Status A (No. 959) 172
Alarm Status B (No. 960) 173
AlarmA at Fault (No. 962) 175
AlarmB at Fault (No. 963) 175
Alarms
  Drive 320
  Drive Alarm Cross Reference 337
  Dual Incremental Encoder 361
  I/O 359
  Safe Speed Monitor 359
  Single Incremental Encoder 360
  Types 311
  Universal Feedback Alarm Descriptions 362
Alt Man Ref AnHi (No. 329) 91
Alt Man Ref AnLo (No. 330) 91
Alt Man Ref Sel (No. 328) 90
Alt Speed Reg BW (No. 648) 128
Alt Speed Reg Ki (No.650) 129
Alt Speed Reg Kp (No. 649) 129
Alt Vel Fdbk Sel (No. 128) 70
Alt Vel FdbkFltr (No. 129) 71
Alt Vel Feedback (No. 130) 71
AltSpdErr FltrBW (No. 651) 129
Analog Input Mode Status 81
Analog Inputs Parameters 81, 83
Analog Outputs Parameters 83, 84
Anlg In Loss Sts
  No. 257 – Main Control Board 82
  No. 47 – Option Module 257, 267
Anlg In Sqrt
  No. 256 – Main Control Board 82
  No. 46 – Option Module 257, 266
Anlg In Type
  No. 255 – Main Control Board 81
  No. 45 – Option Module 257, 266
Anlg In0 Filt BW
  No. 266 – Main Control Board 83
  No. 56 – Option Module 258, 268
Anlg In0 Filt Gn
  No. 265 – Main Control Board 83
  No. 55 – Option Module 258, 267
Anlg In0 Hi
  No. 261 – Main Control Board 82
  No. 51 – Option Module 258, 267
Anlg In0 Lo
  No. 262 – Main Control Board 82
  No. 52 – Option Module 258, 267
Anlg In0 LssActn
  No. 263 – Main Control Board 82
  No. 53 – Option Module 258, 267
Anlg In0 Raw Val
  No. 264 – Main Control Board 83
  No. 54 – Option Module 258, 267
Anlg In0 Value
  No. 260 – Main Control Board 82
  No. 50 – Option Module 258, 267
Anlg In1 Filt BW (No. 66) 268
Anlg In1 Filt Gn (No. 65) 268
Anlg In1 Hi (No. 61) 268
Anlg In1 Lo (No. 62) 268
Anlg In1 LssActn (No. 63) 268
Anlg In1 Raw Val (No. 64) 268
Anlg In1 Value (No. 60) 268
Anlg Out Abs
  No. 271 – Main Control Board 83
  No. 71 – Option Module 259, 269
Anlg Out Type
  No. 270 – Main Control Board 83
  No. 70 – Option Module 259, 269
Anlg Out0 Data
  No. 277 – Main Control Board 83
  No. 77 – Option Module 259, 269
Anlg Out0 DataHi
  No. 278 – Main Control Board 83
  No. 78 – Option Module 259, 269
Anlg Out0 DataLo
  No. 279 – Main Control Board 84
  No. 79 – Option Module 259, 269
Anlg Out0 Hi
  No. 280 – Main Control Board 84
  No. 80 – Option Module 259, 269
Anlg Out0 Lo
  No. 281 – Main Control Board 84
  No. 81 – Option Module 259, 269
Anlg Out0 Sel

No. 275 – Main Control Board 83
No. 75 – Option Module 259, 269
Anlg Out0 Stpt
No. 276 – Main Control Board 83
No. 76 – Option Module 259, 269
Anlg Out0 Val
No. 282 – Main Control Board 84
No. 82 – Option Module 260, 270
Anlg Out1 Data (No. 87) 270
Anlg Out1 DataHi (No. 88) 270
Anlg Out1 DataLo (No. 89) 270
Anlg Out1 Hi (No. 90) 270
Anlg Out1 Lo (No. 91) 270
Anlg Out1 Sel (No. 85) 270
Anlg Out1 Stpt (No. 86) 270
Anlg Out1 Val (No. 92) 270
Application Notes 455
Applications Parameters 180
At Limit Status (No. 945) 169
ATEX
Faults and Alarms 360
Auto Manual Control Parameters 90
Auto Mask (No. 325) 90
Auto Retry Fault (No. 347) 93
Auto Rstrt Delay (No. 349) 93
Auto Rstrt Tries (No. 348) 93
AutoClrCntrDelay (No. 340) 92
AutoClrFlt Delay (No. 339) 92
AutoClrFlt Tries (No. 338) 92
Autotune (No. 70) 63
Autotune Parameters 63
Autotune Torque (No. 71) 63
Aux Vel Fdbk Sel (No. 132) 71
Aux Vel FdbkFltr (No. 133) 71
Aux Vel Feedback (No. 134) 71

B

Basic Parameter View 26
Block Diagrams 375
Control Logic (753) 404
Control Logic (755) 446, 447, 448, 449
Diagnostic Tools 453
Flux Vector Overview (753) 377
Flux Vector Overview (755) 413
Friction Compensation 451, 452
High Speed Trend Wizard 454
Inputs and Outputs (753) 400
Inputs and Outputs (755) 444
Inverter Overload (753) 408, 409
Inverter Overload (755) 450
MOP Control (753) 399
MOP Control (755) 443
Position Control (753) 387
Position Control (755) 423
Process Control (753) 397
Process Control (755) 441
Speed and Position Feedback (753) 379
Speed and Position Feedback (755) 415
Speed Control (753) 380
Speed Control (755) 416
Torque Control (753) 391, 392
Torque Control (755) 433, 434
Boost
Limit Alarm 330
Position Oriented Torque 212
Start, Acceleration, and Run 62
Torque 211
BOOTP (No. 36) 240
BOOTP Server
IP Addressing 21
Brake Off Adj *n* (No. 402, 403) 101
Brake Test Torq (No. 1114) 186
Braking
Flux Braking 100
Parameters 97
Break Frequency (No. 63) 62
Break Voltage (No. 62) 62
Brk Alarm Travel (No. 1109) 185
Brk Release Time (No. 1107) 185
Brk Set Time (No. 1108) 185
Brk Slip Count (No. 1110) 186
Bus Limit ACR Ki (No. 378) 98
Bus Limit ACR Kp (No. 379) 98
Bus Limit Kd (No. 377) 98
Bus Limit Kp (No. 376) 98
Bus Reg Ki (No. 380) 98
Bus Reg Kp (No. 381) 98
Bus Reg Level (No. 375) 97
Bus Reg Lvl Cfg (No. 374) 97
Bus Reg Mode *n* (No. 372, 373) 97
Bus Utilization (No. 42) 59

C

C1 L31 Line Volt (No. 127) 231
C1 Testpt Val 1 (No. 141, 143) 231
Cascaded Config (No. 20) 301
CbFan Derate (No. 481) 109
CbFan ElpsdLife (No. 483) 109
CbFan EventActn (No. 486) 110
CbFan EventLevel (No. 485) 110
CbFan RemainLife (No. 484) 110
CbFan TotalLife (No. 482) 109
Clear Flt Owner (No. 923) 159
C*n* AC Line Freq (No. 123, 223) 230
C*n* Alarm Status1 (No. 107, 207) 229
C*n* CbFanElpsdLif (No. 138, 238) 231
C*n* DC Bus Volt (No. 119, 219) 230
C*n* Fault Status1 (No. 105, 205) 229
C*n* Fault Status2 (No. 106, 206) 229
C*n* GateBoardTemp (No. 122, 222) 230
C*n* Gnd Current (No. 118, 218) 230
C*n* Heatsink Temp (No. 120, 220) 230

C*n* L1 Phase Curr (No. 115, 215) 230
C*n* L12 Line Volt (No. 125, 225) 231
C*n* L2 Phase Curr (No. 116, 216) 230
C*n* L23 Line Volt (No. 126, 226) 231
C*n* L3 Phase Curr (No. 117, 217) 230
C*n* PredMainReset (No. 137, 237) 231
C*n* Rated Amps (No. 3, 4) 227, 232
C*n* SCR Temp (No. 121, 221) 230
C*n* Testpt Sel *n* (No. 140, 142, 240, 242) 231
C*n* Testpt Val 1 (No. 141, 143, 241, 243) 231
Comm Flt Action (No. 54) 242
Commanded SpdRef (No. 2) 54
Commanded Trq (No. 4) 54
Common Mode Type (No. 41) 58
Common Symptoms, Troubleshooting 369
Communication Control Parameters 154, 155
Communications
Parameters 154
Status Indicator LEDs 20
Condition Sts 1 (No. 937) 167
Config Flt Code (No. 70) 300
Configuration File Parameters 86
Control Configuration Parameters 87
Control Logic
Block Diagram (753) 404
Block Diagram (755) 446, 447, 448, 449
Controller, DriveLogix 14
Conventions, Manual 11
Converter Actn (No. 17) 228
Counts Per Unit (No. 1215) 196
CRC Flt Cfg (No. 964) 176
Cross Reference
Faults and Alarms 337
Current Limit Kd (No. 428) 103
Current Limit Ki (No. 429) 103
Current Limit Kp (No. 430) 104
Current Limit *n* (No. 422, 423) 103
Current Lmt Sel (No. 421) 103
Current Rate Lmt (No. 425) 103

D

Data In *nn* (No. 895…902) 157
Data Out *nn* (No. 905…912) 157
Day Stroke Count (No. 1205) 194
DB Ext Ohms (No. 383) 98
DB Ext Watts (No. 384) 98
DB ExtPulseWatts (No. 385) 99
DB Resistor Type (No. 382) 98
DC Brake (No. 393) 100
DC Brake Ki (No. 396) 101
DC Brake Kp (No. 397) 101
DC Brake Level (No. 394) 100
DC Brake Time (No. 395) 101
DC Brk Vd Fltr (No. 399) 101
DC Brk Vq Fltr (No. 398) 101
DC Bus Mem Reset (No. 464) 107
DC Bus Memory (No. 12) 54
DC Bus Volts (No. 11) 54
DC Offset Ctrl (No. 1154) 189
Dead Time Comp (No. 1153) 189
Dec Inhibit Actn (No. 409) 101
Decel Ref Speed (No. 50) 304
Decel Time *n* (No. 537, 538) 118
Default Parameter Settings 318
Delayed Spd Ref (No. 139) 72, 74, 100, 120, 154, 189, 213, 214, 215
DeviceLogix 495
DI Abort Profile (No. 1220) 198
DI Abort Step (No. 1219) 197
DI Accel 2 (No. 179) 75
DI Aux Fault (No. 157) 73
DI BusReg Mode B (No. 186) 75
DI Clear Fault (No. 156) 73
DI Coast Stop (No. 160) 73
DI Cur Lmt Stop (No. 159) 73
DI Decel 2 (No. 180) 75
DI Emerg OvrRide (No. 1680) 115
DI Enable (No. 155) 73
DI Fiber SyncEna (No. 1129) 188
DI Fiber TravDis (No. 1130) 188
DI Find Home (No. 732) 142
DI FloatMicroPsn (No. 1102) 185
DI Fwd Dec Limit (No. 197) 76
DI Fwd End Limit (No. 196) 76
DI Fwd Reverse (No. 162) 73
DI HOA Start (No. 176) 74
DI Hold Step (No. 1218) 197
DI Indx Step (No. 772) 146
DI Indx StepPrst (No. 774) 146
DI Indx StepRev (No. 773) 146
DI Jog 1 (No. 166) 74
DI Jog 1 Forward (No. 167) 74
DI Jog 1 Reverse (No. 168) 74
DI Jog 2 (No. 169) 74
DI Jog 2 Forward (No. 170) 74
DI Jog 2 Reverse (No. 171) 74
DI ManRef AnlgHi (No. 564) 120
DI ManRef AnlgLo (No. 565) 120
DI ManRef Sel (No. 563) 120
DI Manual Ctrl (No. 172) 74
DI MOP Dec (No. 178) 75
DI MOP Inc (No. 177) 75
DI NHdwr OvrTrvl (No. 201) 77
DI OL Home Limit (No. 734) 142
DI PCAM Start (No. 1474) 209
DI PHdwr OvrTrvl (No. 200) 77
DI PID Enable (No. 191) 76
DI PID Hold (No. 192) 76

DI PID Invert (No. 194) 76
DI PID Reset (No. 193) 76
DI Prchrg Seal (No. 190) 76
DI Precharge (No. 189) 75
DI Pump Baseline (No. 1208) 194
DI PumpOff Disbl (No. 1206) 194
DI Pwr Loss (No. 188) 75
DI PwrLoss ModeB (No. 187) 75
DI Redefine Psn (No. 733) 142
DI Rev Dec Limit (No. 199) 77
DI Rev End Limit (No. 198) 77
DI Run (No. 163) 73
DI Run Forward (No. 164) 24, 73
DI Run Reverse (No. 165) 74
DI Speed Sel *n* (No. 173…175) 74
DI SpTqPs Sel *n* (No. 181, 182) 75
DI Start (No. 161) 73
DI Stop (No. 158) 73
DI Stop Mode B (No. 185) 75
DI StrtStep Sel*nn* (No. 1222…1226) 198
DI Torque StptA (No. 195) 76
DI Vel Override (No. 1221) 198
Diagnostic Tools
Block Diagram 453
Diagnostics Parameters 161
Dig In Filt
No. 223 – Main Control Board 78
No. 3 – Option Module 252, 262
Dig In Filt Mask
No. 2 – Option Module 252, 262
No. 222 – Main Control Board 24, 78
Dig In Sts (No. 1) 252, 262
Dig Out Invert
No. 226 – Main Control Board 79
No. 6 – Option Module 253, 263
Dig Out Setpoint
No. 227 – Main Control Board 79
No. 7 – Option Module 253, 263
Dig Out Sts
No. 225 – Main Control Board 79
No. 5 – Option Module 252, 262
Digital In Cfg (No. 150) 73
Digital In Sts (No. 220) 78
Digital Input Functions Parameters 73, 74
Digital Outputs Parameters 79
Dir Owner (No. 922) 158
Direct Position Parameters 145
Direction Mode (No. 308) 87
Direction Mon (No. 42) 303
Direction Tol (No. 43) 303
Displaying Parameters 319
DL From Net *nn* (No. 1…16) 240
DL To Net *nn* (No. 17…32) 240
DLs Fr Peer Act (No. 77) 244
DLs Fr Peer Cfg (No. 76) 244
DLs From Net Act (No. 34) 240
DLs To Net Act (No. 35) 240
DLs To Peer Act (No. 88) 245
DLs To Peer Cfg (No. 87) 245
DLX Bool SP*n* (No. 78…81) 251
DLX DigIn Sts (No. 49) 249
DLX DigOut Sts (No. 50) 249
DLX DigOut Sts2 (No. 51) 250
DLX DINT InSP*n* (No. 98…101) 251
DLX DINT OutSP*n* (No. 102…105) 251
DLX DINT SP*n* (No. 70…77) 251
DLX DIP *nn* (No. 33…48) 249
DLX In *nn* (No. 17…32) 249
DLX Operation (No. 53) 250
DLX Out *nn* (No. 1…16) 249
DLX Prog Cond (No. 52) 250
DLX Real InSP*n* (No. 82…89) 251
DLX Real OutSP*n* (No. 90…97) 251
DLX Real SP*nn* (No. 54…69) 251
DM Input (No. 58) 306
Door Out Mode (No. 74) 306
Door Out Type (No. 57) 306
DPI Datalinks Parameters 157
DPI Logic Rslt (No. 882) 155
DPI Ramp Rslt (No. 881) 155
DPI Ref Rslt (No. 880) 155
Drive Data Parameters 55
Drive Logic Rslt (No. 879) 155
Drive Memory Parameter 91
Drive OL Count (No. 940) 168
Drive OL Mode (No. 420) 103
Drive Ramp Rslt (No. 884) 155
Drive Ref Rslt (No. 883) 155
Drive State 314
Drive Status 1 (No. 935) 163
Drive Status 2 (No. 936) 166
Drive Temp C (No. 944) 168
Drive Temp Pct (No. 943) 168
DriveLogix Controller 14
Droop Compensation Parameters 125
Droop RPM at FLA (No. 620) 125
Dual Incremental Encoder
Faults and Alarms 361
Parameters 276
Duty Rating (No. 306) 87
Dynamic Braking
Parameters 98
Setup 97
Type Select 98

E

Econ AccDec Ki (No. 48) 59
Econ AccDec Kp (No. 49) 59
Econ At Ref Ki (No. 47) 59

Effctv I Rating (No. 21) 222
Elapsed kWH (No. 14) 55
Elapsed MWH (No. 13) 54
Elapsed Run Time (No. 15) 55
Electronic Gear Parameters 150
Elpsd Mtr kWHrs (No. 18) 55
Elpsd Mtr MWHrs (No. 16) 55
Elpsd Rgn kWHrs (No. 19) 55
Elpsd Rgn MWHrs (No. 17) 55
Emer OV Mode Sel (No. 1681) 115
Emerg Prot OVRD (No. 1683) 115
EmergMode Status (No. 1684) 116
Enable SW Input (No. 54) 305
Enc 0 Cfg (No. 1) 276
Enc 0 Error Sts (No. 6) 277
Enc 0 FB (No. 4) 276
Enc 0 FB Lss Cfg (No. 3) 276
Enc 0 PhsLss Cnt (No. 7) 277
Enc 0 PPR (No. 2) 276
Enc 0 QuadLssCnt (No. 8) 277
Enc 0 Sts (No. 5) 277
Enc 1 Cfg (No. 11) 278
Enc 1 Error Sts (No. 16) 279
Enc 1 FB (No. 14) 278
Enc 1 FB Lss Cfg (No. 13) 278
Enc 1 PhsLss Cnt (No. 17) 279
Enc 1 PPR (No. 12) 278
Enc 1 QuadLssCnt (No. 18) 279
Enc 1 Sts (No. 15) 279
Enc Out FD PPR (No. 82) 293
Enc Out Mode (No. 81) 293
Enc Out Sel (No. 80) 293
Enc Out Z Offset (No. 83) 293
Enc Out Z PPR (No. 84) 293
Encdrlss AngComp (No. 78) 64
Encdrlss VltComp (No. 79) 64
Encoder Cfg (No. 1) 273
Encoder Feedback (No. 4) 273
Encoder PPR (No. 2) 273
Encoder Status (No. 5) 274
Error Status (No. 6) 274
EtherNet/IP 21
  Parameters 240
Expert Parameter View 34
Ext Ramped Ref (No. 700) 134

F

Fast Braking Ki (No. 400) 101
Fast Braking Kp (No. 401) 101
Fault Amps (No. 957) 172
Fault Bus Volts (No. 958) 172
Fault Frequency (No. 956) 172
Fault Information Parameters 170, 171
Fault Status
  No. 12 – Converter 227, 232
  No. 12 – Inverter 222
Fault Status (No. 67) 308
Fault Status A (No. 952) 170
Fault Status B (No. 953) 171
Faults
  ATEX 360
  Drive 320
  Drive Fault Cross Reference 337
  Dual Incremental Encoder 361
  I/O 359
  N-1 See Manaul 334
  Rerate See Manual 334
  Safe Speed Monitor 359
  Single Incremental Encoder 360
  Types 311
  Universal Feedback Fault Descriptions 362
FB0 Cfg (No. 8) 284
FB0 Device Sel (No. 6) 282
FB0 Identify (No. 7) 283
FB0 Inc Cfg (No. 16) 286
FB0 Inc Sts (No. 17) 286
FB0 IncAndSC PPR (No. 15) 285
FB0 Lin CPR (No. 25) 287
FB0 Lin Upd Rate (No. 26) 287
FB0 LinStahl Sts (No. 27) 287
FB0 Loss Cfg (No. 9) 284
FB0 Position (No. 5) 282
FB0 SSI Cfg (No. 20) 286
FB0 SSI Resol (No. 21) 287
FB0 SSI Turns (No. 22) 287
FB0 Sts (No. 10) 285
FB1 Cfg (No. 38) 290
FB1 Device Sel (No. 36) 288
FB1 Identify (No. 37) 289
FB1 Inc Cfg (No. 46) 291
FB1 Inc Sts (No. 47) 291
FB1 IncAndSC PPR (No. 45) 291
FB1 Lin CPR (No. 55) 292
FB1 Lin Upd Rate (No. 56) 292
FB1 LinStahl Sts (No. 57) 292
FB1 Loss Cfg (No. 39) 290
FB1 Position (No. 35) 288
FB1 SSI Cfg (No. 50) 292
FB1 SSI Resol (No. 51) 292
FB1 SSI Turns (No. 52) 292
FB1 Sts (No. 40) 290
Fbk 1 Polarity (No. 30) 302
Fbk 1 Resolution (No. 31) 302
Fbk 1 Speed (No. 33) 302
Fbk 1 Type (No. 28) 302
Fbk 1 Units (No. 29) 302
Fbk 1 Volt Mon (No. 32) 302
Fbk 2 Polarity (No. 35) 302
Fbk 2 Resolution (No. 36) 302

Fbk 2 Speed (No. 38) 303
Fbk 2 Units (No. 34) 302
Fbk 2 Volt Mon (No. 37) 303
Fbk Mode (No. 27) 302
Fbk Pos Tol (No. 41) 303
Fbk Speed Ratio (No. 39) 303
Fbk Speed Tol (No. 40) 303
Fdbk Filter Cfg (No. 303) 55
Fdbk Loss Cfg (No. 3) 273
Feedback & I/O Parameters 70
Feedback Sources
Setting gains for Primary and Alternate sources 126
Fiber Control (No. 1120) 187
Fiber Functions Parameters 187, 188
Fiber Status (No. 1121) 187
File Group Parameter Organization 26
Filtered Spd Ref (No. 595) 123
Filtered SpdFdbk (No. 640) 127
Filtered Trq Ref (No. 689) 133
Final Speed Ref (No. 597) 123
Find Home Ramp (No. 736) 142
Find Home Speed (No. 735) 142
Float Tolerance (No. 1111) 186
Flt Cfg DL *nn* (No. 60…75) 244
Flt Cfg Logic (No. 58) 243
Flt Cfg Ref (No. 59) 243
Flux Braking 100
Flux Braking En (No. 388) 100
Flux Braking Ki (No. 390) 100
Flux Braking Kp (No. 391) 100
Flux Braking Lmt (No. 389) 100
Flux Cur Fdbk (No. 6) 54
Flux Current Ref (No. 75) 63
Flux Down Ki (No. 45) 59
Flux Down Kp (No. 46) 59
Flux Reg Enable (No. 103) 67
Flux Reg Ki (No. 104) 67
Flux Reg Kp (No. 105) 67
Flux Up Enable (No. 43) 59
Flux Up Time (No. 44) 59
Flux Vector Overview
Block Diagram (753) 377
Block Diagram (755) 413
Flying Start 95
FlyingStart Mode (No. 356) 95
Fr Peer Addr *n* (No. 81…84) 245
Fr Peer Enable (No. 85) 245
Fr Peer Status (No. 86) 245
Fr Peer Timeout (No. 80) 244
FrctnComp Hyst (No. 1562) 137
FrctnComp Mode (No. 1560) 137
FrctnComp Out (No. 1567) 138
FrctnComp Rated (No. 1566) 138
FrctnComp Slip (No. 1565) 138
FrctnComp Stick (No. 1564) 137
FrctnComp Time (No. 1563) 137
FrctnComp Trig (No. 1561) 137
Friction Compensation
Block Diagram 451, 452
Parameters 137
FS Brl Lvl (No. 365) 96
FS Excitation Ki (No. 361) 96
FS Excitation Kp (No. 362) 96
FS Gain (No. 357) 95
FS Ki (No. 358) 95
FS Msrmnt CurLvl (No. 364) 96
FS Reconnect Dly (No. 363) 96
FS Speed Reg Ki (No. 359) 95
FS Speed Reg Kp (No. 360) 96
FS ZSpd Thresh (No. 367) 96

G

Gate Board Temp (No. 25) 228, 233
Gateway Cfg *n* (No. 46…49) 241
Gearbox Limit (No. 1181) 191
Gearbox Rating (No. 1182) 191
Gearbox Ratio (No. 1183) 191
Gearbox Sheave (No. 1184) 191
General Precautions 12
Gnd Cur Flt Lvl (No. 16) 228
Ground Current (No. 18) 223
Ground Fault Parameters 108, 115
Ground Warn Actn (No. 466) 108
Ground Warn Lvl (No. 467) 108
Guard Status (No. 68) 309

H

Heatsink Temp (No. 23) 228
High Speed Trend Wizard
Block Diagram 454
Home Decel (No. 744) 143
Home Return Spd (No. 743) 143
Home Torq Offset (No. 742) 143
Home Trq Level (No. 741) 143
Home Trq Thresh (No. 739) 143
Home Trq Time (No. 740) 143
Homing Cfg (No. 20) 280
Homing Control (No. 731) 142
Homing Status (No. 730) 141
Host Parameters 47
HSFan Derate (No. 488) 110
HSFan ElpsdLife (No. 490) 110
HSFan EventActn (No. 493) 111
HSFan EventLevel (No. 492) 111
HSFan RemainLife (No. 491) 111
HSFan ResetLog (No. 494) 111
HSFan TotalLife (No. 489) 110

Human Interface Module
In Integrated Motion Applications 319

I

I/O Modules Parameters 47, 48, 252
IA LdObs Delay (No. 709) 136
Id Comp Enbl (No. 1600) 217
Id Comp Mtrng *n* (No. 1601…1611) 217-218
Id Comp Regen *n* (No. 1613…1623) 218-220
Id Lo FreqCur Kp (No. 431) 104
IdCompMtrng *n* Iq (No. 1602…1612) 217-218
IdCompRegen *n* Iq (No. 1614…1624) 219-220
Idle Flt Action (No. 55) 242
IGBT Temp C (No. 942) 168
IGBT Temp Pct (No. 941) 168
I*n* Alarm Status (No. 107, 207) 224
I*n* DC Bus Volt (No. 119, 219) 225
I*n* Fault Status (No. 105, 205) 224
I*n* Gnd Current (No. 118, 218) 225
I*n* Heatsink Temp (No. 120, 220) 225
I*n* HSFan Speed (No. 124, 224) 225
I*n* HSFanElpsdLif (No. 128) 226
I*n* IGBT Temp (No. 121, 221) 225
I*n* InFan 1 Speed (No. 125, 225) 225
I*n* InFan 2 Speed (No. 126, 226) 225
I*n* InFanElpsdLif (No. 129, 229) 226
In Pos Psn Band (No. 726) 140
In Pos Psn Dwell (No. 727) 141
I*n* PredMainReset (No. 127, 227) 226
I*n* Rated Amps (No. 3, 4) 222
I*n* Testpt Sel *n* (No. 140, 142, 240, 242) 226
I*n* Testpt Val *n* (No. 141, 143, 241, 243) 226
I*n* U Phase Curr (No. 115, 215) 225
I*n* V Phase Curr (No. 116, 216) 225
I*n* W Phase Curr (No. 117, 217) 225
InAdp LdObs Mode (No. 704) 135
Inert Comp LPFBW (No. 698) 134
InertAdptFltrBW (No. 710) 136
Inertia Acc Gain (No. 696) 134
Inertia Adapt BW (No. 705) 135
Inertia Adaption Parameters 135
Inertia Comp Out (No. 699) 134
Inertia Compensation Parameters 134
Inertia CompMode (No. 695) 134
Inertia Dec Gain (No. 697) 134
Inertia Test Lmt (No. 77) 64
InertiaAdaptGain (No. 706) 135
InertiaTrqAdd (No. 708) 136
InFan Derate (No. 495) 111
InFan ElpsdLife (No. 497) 112
InFan EventActn (No. 500) 112
InFan EventLevel (No. 499) 112
InFan RemainLife (No. 498) 112
InFan ResetLog (No. 501) 112
InFan TotalLife (No. 496) 111
InPhase Loss Lvl (No. 463) 107
InPhase LossActn (No. 462) 107
Inputs and Outputs
Block Diagram (753) 400
Block Diagram (755) 444
Integrated Motion
24-bit Device Feedback 535
Analog Input 534
Analog Output 534
Brake Output 533
Contactor Enable Output 534
Digital Input 534
Digital Output 534
Motor Overload 533
Motor Thermostat Input 534
Overtravel Input 533
Pre-charge Input 533
Regeneration OK Input 534
SSI Full Rotary 535
Torque Prove 523
Integrated Motion Applications
HIM Restrictions 319
Interp Control (No. 755) 144
Interp Psn Input (No. 756) 144
Interp Psn Out (No. 759) 144
Interp Trq Input (No. 758) 144
Interp Trq Out (No. 761) 144
Interp Vel Input (No. 757) 144
Interp Vel Out (No. 760) 144
Interpolator Parameters 144
Inverter Overload
Block Diagram (753) 408, 409
Block Diagram (755) 450
IO Diag Status (No. 69) 310
IP Addr Cfg *n* (No. 38…41) 241
IP Address Switches 21
IPM AltOffstComp (No. 1647) 66
IPM Bus Prot (No. 1629) 69
IPM Max Cur (No. 1640) 69
IPM PriOffstComp (No. 1646) 66
IPM SpdEst Kp Hi (No. 1662) 61
IPM TrqTrim HLim (No. 1644) 69
IPM TrqTrim Ki (No. 1643) 69
IPM TrqTrim Kp (No. 1642) 69
IPM TrqTrim LLim (No. 1645) 69
IPM_Ld_0_pct (No. 1635) 66
IPM_Ld_100_pct (No. 1636) 66
IPM_Lg_100_pct (No. 1633) 66
IPM_Lg_125_pct (No. 1634) 66
IPM_Lg_25_pct (No. 1630) 66
IPM_Lg_50_pct (No. 1631) 66
IPM_Lg_75_pct (No. 1632) 66
IPMVdFFwdLqIqWe (No. 1639) 69
IPMVqFFwdCemf (No. 1637) 69
IPMVqFFwdLdIdWe (No. 1638) 69

Iq Lo FreqCur Kp (No. 432) 104
IR Voltage Drop (No. 73) 63
Ixo Voltage Drop (No. 74) 63

J

Jerk Gain (No. 433) 104
Jog Acc Dec Time (No. 539) 118
Jog Owner (No. 921) 158
Jog Speed *n* (No. 556, 557) 119
Jumper J4 Analog Input Mode 81
Jumper Out Fault 331

L

L1 Phase Curr (No. 20) 228
L2 Phase Curr (No. 21) 228
L3 Phase Curr (No. 22) 228
Language (No. 302) 86
Last Fault Code (No. 951) 170
Last StartSource (No. 931) 161
Last Stop Source (No. 932) 161
Last StrtInhibit (No. 934) 162
LdPsn Fdbk Div (No. 826) 151
LdPsn Fdbk Mult (No. 825) 151
LEDs 20, 314
Lim Speed Input (No. 52) 305
Limited Spd Ref (No. 593) 123
Limited Trq Ref (No. 690) 133
LimSpd Mon Delay (No. 53) 305
Load Estimate (No. 707) 135
Load Limits Parameters 103
Load Loss Action (No. 441) 105
Load Loss Level (No. 442) 105
Load Loss Time (No. 443) 105
Load Observer BW (No. 711) 136
Load Position Parameters 151
Load Psn FdbkSel (No. 136) 72
Lock Mon Enable (No. 59) 306
Lock Mon Input (No. 60) 306
Lock State (No. 5) 299
Logic Mask (No. 324) 90
Logic Mask Act (No. 886) 156
Logic Src Cfg (No. 78) 244

M

Main DC Bus Volt (No. 18) 233
Manual Cmd Mask (No. 326) 90
Manual Conventions 11
Manual Owner (No. 924) 159
Manual Preload (No. 331) 91
Manual Ref Mask (No. 327) 90
Max Acc Stop Typ (No. 66) 307
Max Accel Enable (No. 64) 307
Max Fwd Speed (No. 520) 117
Max Rev Speed (No. 521) 117
Max Rod Speed (No. 1175) 191
Max Rod Torque (No. 1176) 191
Max Spd Stop Typ (No. 63) 307
Max Speed Enable (No. 61) 307
Max Stop Time (No. 47) 304
Max Traverse (No. 1125) 187
Maximum Freq (No. 37) 57
Maximum Voltage (No. 36) 57
MchBrngElpsdLife (No. 512) 114
MchBrngEventActn (No. 515) 114
MchBrngEventLvl (No. 514) 114
MchBrngRemainLif (No. 513) 114
MchBrngResetLog (No. 516) 114
MchBrngTotalLife (No. 511) 114
MchLube EventLvl (No. 518) 114
MchLubeElpsdHrs (No. 517) 114
MchLubeEventActn (No. 519) 114
Metering Parameters 54
MicroPsnScalePct (No. 1112) 186
Min Adj Voltage (No. 1152) 189
Min Fwd Speed (No. 522) 117
Min Rev Speed (No. 523) 117
Min Rod Speed (No. 1177) 191
Minor Flt Cfg (No. 950) 170
Module Err Reset (No. 2) 282
Module Parameters 47
Module Sts
  No. 1 – Universal Feedback Module 281
  No. 21 – Dual Incremental Encoder 280
Monitor Parameters 54
MOP Control
  Block Diagram (753) 399
  Block Diagram (755) 443
MOP High Limit (No. 561) 120
MOP Init Select (No. 566) 120
MOP Init Stpt (No. 567) 120
MOP Low Limit (No. 562) 120
MOP Rate (No. 560) 120
MOP Reference (No. 558) 119
Motor Control Parameters 56, 57, 58
Motor Ctrl Mode (No. 35) 57
Motor Data Parameters 56
Motor NP Amps (No. 26) 56
Motor NP Hertz (No. 27) 56
Motor NP Power (No. 30) 56
Motor NP RPM (No. 28) 56
Motor NP Volts (No. 25) 56
Motor OL Actn (No. 410) 102
Motor Overload Parameters 102, 103
Motor Poles (No. 31) 56
Motor Power Lmt (No. 427) 103

Motor Sheave (No. 1178) 191
Motor TCP Parameters 81
Msg Flt Action (No. 57) 243
Mtr NP Pwr Units (No. 29) 56
Mtr OL Alarm Lvl (No. 412) 102
Mtr OL at Pwr Up (No. 411) 102
Mtr OL Counts (No. 418) 103
Mtr OL Factor (No. 413) 102
Mtr OL Hertz (No. 414) 102
Mtr OL Reset Lvl (No. 415) 102
Mtr OL Trip Time (No. 419) 103
Mtr Options Cfg (No. 40) 58
Mtr Vel Fdbk (No. 3) 54
MtrBrng ResetLog (No. 507) 113
MtrBrngElpsdLife (No. 503) 113
MtrBrngEventActn (No. 506) 113
MtrBrngEventLvl (No. 505) 113
MtrBrngRemainLif (No. 504) 113
MtrBrngTotalLife (No. 502) 113
MtrLubeElpsdHrs (No. 508) 113
MtrLubeEventActn (No. 510) 113
MtrLubeEventLvl (No. 509) 113
MtrOL Reset Time (No. 416) 102

N

N-1 See Manual Fault 334
Neg Torque Limit (No. 671) 132
Net Addr Src (No. 37) 240
Net Rate Act (No. 51) 242
Net Rate Cfg (No. 50) 241
New Password (No. 13) 299
Notch Fltr Atten (No. 688) 133
Notch Fltr Freq (No. 687) 133

O

Oil Well 191
OilWell Pump Cfg (No. 1179) 191
Online Status
No. 10 – Converter 227, 232
No. 10 – Inverter 222
Open Loop Fdbk (No. 137) 72
Operating Mode (No. 6) 299
Option Modules
Parameter Organization 47
Out PhaseLossLvl (No. 445) 105
OutPhaseLossActn (No. 444) 105
Output Current (No. 7) 54
Output Frequency (No. 1) 54
Output Power (No. 9) 54
Output Powr Fctr (No. 10) 54
Output Voltage (No. 8) 54
OverSpd Response (No. 24) 301
Overspeed Limit (No. 524) 117
Owners Parameters 158, 160

P

P Jump 188
P Jump (No. 1126) 188
Parameter
Not Displaying 319
Parameter Access Level
Explanation 25
Parameters
Advanced View 28
Basic View 26
Descriptions and Programming 23, 53, 221, 239
DeviceLogix 497
Drive Applications File 180
Drive Communication File 154
Drive Configuration File 86
Drive Diagnostics File 161
Drive Feedback & I/O File 70
Drive Monitor File 54
Drive Motor Control File 56
Drive Position Control File 139
Drive Protection File 102
Drive Speed Control File 117
Dual Incremental Encoder 276
EtherNet/IP 240
Expert View 34
How Organized 26
I/O Module 252
I/O Modules 47, 48
Linear List 54
On Option Modules 47
Safe Speed Monitor Module 299
Setting to Factory Defaults 318
Single Incremental Encoder 273
Universal Feedback Module 281
Password (No. 1) 299
Password Command (No. 17) 299
PCAM Aux EndPnt (No. 1439) 208
PCAM Aux Pt X *n* (No. 1441…1469) 208
PCAM Aux Pt Y *n* (No. 1442…1470) 208
PCAM Aux Types (No. 1440) 208
PCAM Control (No. 1390) 205
PCAM Main EndPnt (No. 1405) 206
PCAM Main Pt X *n* (No. 1407…1437) 207
PCAM Main Pt Y *n* (No. 1408…1438) 207
PCAM Main Types (No. 1406) 207
PCAM Mode (No. 1391) 205
PCAM Psn Ofst (No. 1394) 205
PCAM Psn Out (No. 1473) 209
PCAM Psn Select (No. 1392) 205
PCAM Psn Stpt (No. 1393) 205
PCAM PsnOfst Eps (No. 1395) 206
PCAM Scale X (No. 1397) 206
PCAM ScaleY Sel (No. 1399) 206
PCAM ScaleYSetPt (No. 1400) 206
PCAM Slope Begin (No. 1403) 206
PCAM Slope End (No. 1404) 206

PCAM Span X (No. 1396) 206
PCAM Span Y (No. 1398) 206
PCAM Status (No. 1471) 209
PCAM Vel Out (No. 1472) 209
PCAM VelScaleSel (No. 1401) 206
PCAM VelScaleSP (No. 1402) 206
PCP Pump Sheave (No. 1180) 191
Pct Cycle Torque (No. 1198) 194
Pct Drop Torque (No. 1200) 194
Pct Lift Torque (No. 1199) 194
Peak 1 Change (No. 1040) 178
Peak 2 Change (No. 1045) 179
Peak Detection Parameters 177
Peak1 Cfg (No. 1039) 178
Peak2 Cfg (No. 1044) 179
PeakDetect1 Out (No. 1041) 178
PeakDetect2 Out (No. 1046) 179
Peer Flt Action (No. 56) 243
Permanent Magnet Motors 517
  Compatiblity 513
  Parameters 64
Phase Delay Comp (No. 108) 68
Phase Lock Loop Parameters 148
Phase Loss Count (No. 7) 275
PID Cfg (No. 1065) 180
PID Control (No. 1066) 180
PID Deadband (No. 1083) 182
PID Deriv Time (No. 1088) 182
PID Error Meter (No. 1092) 183
PID FBLoss SpSel (No. 1075) 181
PID FBLoss TqSel (No. 1076) 181
PID Fdbk (No. 1077) 181
PID Fdbk AnlgHi (No. 1073) 181
PID Fdbk AnlgLo (No. 1074) 181
PID Fdbk Meter (No. 1091) 183
PID Fdbk Mult (No. 1078) 181
PID Fdbk Sel (No. 1072) 181
PID Int Time (No. 1087) 182
PID Lower Limit (No. 1082) 182
PID LP Filter BW (No. 1084) 182
PID Output Meter (No. 1093) 183
PID Output Mult (No. 1080) 182
PID Output Sel (No. 1079) 182
PID Preload (No. 1085) 182
PID Prop Gain (No. 1086) 182
PID Ref AnlgHi (No. 1068) 181
PID Ref AnlgLo (No. 1069) 181
PID Ref Meter (No. 1090) 183
PID Ref Mult (No. 1071) 181
PID Ref Sel (No. 1067) 180
PID Setpoint (No. 1070) 181
PID Status (No. 1089) 183
PID Upper Limit (No. 1081) 182
PkDtct Stpt DInt (No. 1036) 177
PkDtct Stpt Real (No. 1035) 177
PkDtct1 In Sel (No. 1037) 177
PkDtct1PresetSel (No. 1038) 177
PkDtct2 In Sel (No. 1042) 178
PkDtct2PresetSel (No. 1043) 178
PLL BW (No. 801) 149
PLL Control (No. 795) 148
PLL Enc Out (No. 809) 150
PLL Enc Out Adv (No. 810) 150
PLL EPR Input (No. 804) 149
PLL EPR Output (No. 811) 150
PLL Ext Spd Sel (No. 796) 148
PLL Ext Spd Stpt (No. 797) 149
PLL Ext SpdScale (No. 798) 149
PLL LPFilter BW (No. 802) 149
PLL Psn Out Fltr (No. 806) 150
PLL Psn Ref Sel (No. 799) 149
PLL Psn Stpt (No. 800) 149
PLL Rvls Input (No. 805) 149
PLL Rvls Output (No. 812) 150
PLL Speed Out (No. 807) 150
PLL Speed OutAdv (No. 808) 150
PLL Virt Enc RPM (No. 803) 149
PM AltEnc Offset (No. 82) 65
PM CEMF Voltage (No. 86) 65
PM Cfg (No. 80) 64
PM Dir Test Cur (No. 93) 65
PM IR Voltage (No. 87) 65
PM IXd Voltage (No. 89) 65
PM IXq Voltage (No. 88) 65
PM IXqVoltage125 (No. 120) 66
PM OfstTst CRamp (No. 84) 65, 66
PM OfstTst Cur (No. 83) 65
PM OfstTst FRamp (No. 85) 55, 65, 69
PM PriEnc Offset (No. 81) 64
PM Vel Max (No. 1641) 69
PM Vqs Reg Ki (No. 92) 65
PM Vqs Reg Kp (No. 91) 65
P*n* 240VSplyVolts (No. 112, 212) 236
P*n* Alarm Status1 (No. 107, 207) 235
P*n* Board Status (No. 104, 204) 234
P*n* CbFanElpsdLif (No. 138, 238) 236
P*n* DC Bus Volts (No. 110, 210) 236
P*n* Fault Status1 (No. 105, 205) 235
P*n* Fault Status2 (No. 106, 206) 235
P*n* GateBoardTemp (No. 122, 222) 236
P*n* Main DC Volts (No. 111, 211) 236
P*n* PredMainReset (No. 137, 237) 236
P*n* Testpt Sel *n* (No. 140, 142, 240, 242) 237
P*n* Testpt Val *n* (No. 141, 143, 241, 243) 237
Point to Point Parameters 146
Port Mask Act (No. 885) 156
Port *n* Reference (No. 871…878) 155
Port Number (No. 33) 240

Port Verification 369
Pos Torque Limit (No. 670) 132
Position Control
Block Diagram (753) 387
Block Diagram (755) 423
Position Control (No. 721) 139
Position Control Parameters 139
Position Homing Parameters 142
Position Offset Parameters 151
Position Oriented Torque Boost 212
Block Diagram 432
Position Regulator Parameters 152
Position Watch Parameters 144
Power Cycling
IP Address Switches 21
Power Loss Actn (No. 449) 106
Power Loss Parameters 106, 107
PowerUp Delay (No. 346) 93
Prchrg Control (No. 321) 89
Prchrg Delay (No. 322) 89
Prchrg Err Cfg (No. 323) 89
Precautions, General 12
Predictive Maintenace Parameters 109, 110, 111, 112
PredMaint Reset (No. 472) 109
PredMaint Rst En (No. 471) 109
PredMaint Sts (No. 469) 109
PredMaint Sts (No. 99) 260, 271
PredMaintAmbTemp (No. 470) 109
Preferences Parameters 86
PReg Neg Int Lmt (No. 841) 153
PReg Neg Spd Lmt (No. 845) 153
PReg Pos Int Lmt (No. 840) 153
PReg Pos Spd Lmt (No. 844) 153
Preset Speed *n* (No. 571…577) 120
Pri Vel Fdbk Sel (No. 125) 70
Pri Vel FdbkFltr (No. 126) 70
Pri Vel Feedback (No. 127) 70
Process Control
Block Diagram (753) 397
Block Diagram (755) 441
Process PID Parameters 180
Prof DI Invert (No. 1217) 197
Profile Command (No. 1213) 196
Profile Status (No. 1210) 195, 210, 211, 212, 215, 216, 217, 218, 219, 220
Profiling Parameters 195
ProfVel Override (No. 1216) 196
Protection File Parameters 102
Psn Actual (No. 836) 152
Psn Command (No. 723) 140
Psn Direct Ref (No. 767) 145
Psn Direct Stpt (No. 766) 145
Psn EGR Div (No. 817) 150
Psn EGR Mult (No. 816) 150
Psn Error (No. 835) 152
Psn Fdbk (No. 847) 154
Psn Fdbk Sel (No. 135) 71
Psn Gear Ratio (No. 848) 154
Psn Load Actual (No. 837) 153
Psn Offset 1 (No. 821) 151
Psn Offset 1 Sel (No. 820) 151
Psn Offset 2 (No. 823) 151
Psn Offset 2 Sel (No. 822) 151
Psn Offset Vel (No. 824) 151
Psn Out Fltr BW (No. 834) 152
Psn Out Fltr Sel (No. 832) 152
Psn Out FltrGain (No. 833) 152
Psn Ref EGR Out (No. 815) 150
Psn Ref Select (No. 765) 145
Psn Reg Droop (No. 846) 154
Psn Reg Ki (No. 838) 153
Psn Reg Kp (No. 839) 153
Psn Reg Status (No. 724) 140
Psn Selected Ref (No. 722) 140
PsnNtchFltrDepth (No. 831) 152
PsnNtchFltrFreq (No. 830) 152
PsnReg IntgrlOut (No. 842) 153
PsnReg Spd Out (No. 843) 153
PsnTrqBst Ctrl (No. 1515) 211
PsnTrqBst Ps X*n* (No. 1520…1524) 212
PsnTrqBst RefSel (No. 1517) 212
PSnTrqBst Sts (No. 1516) 212
PsnTrqBst Trq Y*n* (No. 1525…1527) 212
PsnTrqBst TrqOut (No. 1528) 212
PsnTrqBst UNWCnt (No. 1519) 212
PsnTrqBstPsnOfst (No. 1518) 212
PsnWatch*n* DtctIn (No. 746, 749) 144
PsnWatch*n* Select (No. 745, 748) 144
PsnWatch*n* Stpt (No. 747, 750) 144
PTC Cfg (No. 250) 81
PTC Cfg (No. 40) 266
PTC Raw Value (No. 42) 266
PTC Status (No. 251) 81
PTC Sts (No. 41) 256, 266
PTP Accel Time (No. 781) 147
PTP Command (No. 784) 147
PTP Control (No. 770) 146
PTP Decel Time (No. 782) 147
PTP EGR Div (No. 790) 148
PTP EGR Mult (No. 789) 148
PTP Feedback (No. 777) 147
PTP Fwd Vel Lmt (No. 785) 147
PTP Index Preset (No. 779) 147
PTP Mode (No. 771) 146
PTP PsnRefStatus (No. 720) 139
PTP Ref Scale (No. 778) 147
PTP Ref Sel (No. 775) 147
PTP Reference (No. 776) 147
PTP Rev Vel Lmt (No. 786) 148

PTP S Curve (No. 787) 148
PTP Setpoint (No. 780) 147
PTP Speed FwdRef (No. 783) 147
PTP Vel Override (No. 788) 148
Pump Cycle Store (No. 1192) 193
Pump Jack Parameters 190
Pump Off Action (No. 1189) 192
Pump Off Config (No. 1187) 192
Pump Off Control (No. 1190) 192
Pump Off Count (No. 1203) 194
Pump Off Level (No. 1195) 193
Pump Off Parameters 192, 193
Pump Off Setup (No. 1188) 192
Pump Off Speed (No. 1196) 194
Pump Off Status (No. 1191) 193
Pump Off Time (No. 1197) 194
Pump OffSleepLvl (No. 1207) 194
PumpOff SleepCnt (No. 1204) 194
Purge Frequency (No. 1682) 115
PWM Frequency (No. 38) 57
Pwr Loss Mode *n* (No. 450, 453) 106
Pwr Loss *n* Level (No. 451, 454) 106
Pwr Loss *n* Time (No. 452, 455) 106
PwrLoss RT ACRKi (No. 459) 106
PwrLoss RT ACRKp (No. 458) 106
PwrLoss RT BusKd (No. 457) 106
PwrLoss RT BusKp (No. 456) 106

Q

Quad Loss Count (No. 8) 275

R

Ramped Spd Ref (No. 594) 123
Rated Amps (No. 21) 55
Rated kW (No. 22) 55
Rated Volts (No. 20) 55
Recfg Acknowledg (No. 20) 223
Ref Select Owner (No. 925) 159
Ref Src Cfg (No. 79) 244
Regen Power Lmt (No. 426) 103
Registration Parameters 295
Regulator Parameters 67
Relay Output Parameters 85
Rerate See Manual Fault 334
Reset Defaults (No. 7) 299
Reset Meters (No. 336) 91
Reset Parameter Defaults 318
Reset Type (No. 22) 301
Rgsn Arm (No. 90) 293
Rgsn HmIn Filter (No. 93) 294
Rgsn In 0 Filter (No. 91) 294
Rgsn In 1 Filter (No. 92) 294
Rgsn Latch*n* Cfg (No. 100…127) 295
Rgsn Latch*n* Psn (No. 101…128) 298
Rgsn Latch*n* Time (No. 102…129) 298
Rgsn Sts (No. 94) 295
R0 PredMaint Sts (No. 285) 85
R00 ElapsedLife
No. 103 – Option Module 260, 271
No. 289 – Main Control Board 85
R00 Level
No. 12 – Option Module 253, 263
No. 232 – Main Control Board 79
R00 Level CmpSts
No. 13 – Option Module 253, 263
No. 233 – Main Control Board 80
R00 Level Sel
No. 11 – Option Module 253, 263
No. 231 – Main Control Board 79
R00 LifeEvntActn
No. 106 – Option Module 261, 271
No. 292 – Main Control Board 85
R00 LifeEvntLvl
No. 105 – Option Module 260, 271
No. 291 – Main Control Board 85
R00 Load Amps
No. 101 – Option Module 260, 271
No. 287 – Main Control Board 85
R00 Load Type
No. 100 – Option Module 260, 271
No. 286 – Main Control Board 85
R00 Off Time
No. 15 – Option Module 254, 264
No. 235 – Main Control Board 80
R00 On Time
No. 14 – Option Module 254, 264
No. 234 – Main Control Board 80
R00 RemainLife
No. 104 – Option Module 260, 271
No. 290 – Main Control Board 85
R00 Sel
No. 10 – Option Module 253, 263
No. 230 – Main Control Board 79
R00 TotalLife
No. 102 – Option Module 260, 271
No. 288 – Main Control Board 85
R01 ElapsedLife (No. 113) 261, 272
R01 Level (No. 22) 254, 264
R01 Level CmpSts (No. 23) 254, 264
R01 Level Sel (No. 21) 254, 264
R01 LifeEvntActn (No. 116) 261, 272
R01 LifeEvntLvl (No. 115) 261, 272
R01 Load Amps (No. 111) 261, 272
R01 Load Type (No. 110) 261, 272
R01 Off Time (No. 25) 255, 265
R01 On Time (No. 24) 254, 264
R01 RemainLife (No. 114) 261, 272
R01 Sel (No. 20) 254, 264
R01 TotalLife (No. 112) 261, 272
Rod Speed (No. 1165) 190

Rod Speed Cmd (No. 1167) 190
Rod Torque (No. 1166) 190
Roll Position Indicator 210
Block Diagram 430, 431
Roll Psn Config (No. 1500) 210
Roll Psn Offset (No. 1505) 210
Roll Psn Preset (No. 1504) 210
Roll Psn Status (No. 1501) 210
RP EPR Input (No. 1506) 210
RP Psn Fdbk Sel (No. 1503) 210
RP Psn Fdbk Stpt (No. 1502) 210
RP Psn Output (No. 1511) 211
RP Rvls Input (No. 1507) 211
RP Rvls Output (No. 1508) 211
RP Unit Out (No. 1512) 211
RP Unit Scale (No. 1510) 211
RP Unwind (No. 1509) 211
Rstrt Cntr Delay (No. 343) 92
Run Boost (No. 61) 62

S

S Curve Accel (No. 540) 118
S Curve Decel (No. 541) 118
Safe Accel Limit (No. 65) 307
Safe Max Speed (No. 62) 307
Safe Speed Limit (No. 55) 305
Safe Speed Monitor
Module Status 280
Parameters 299
Safe Stop Input (No. 44) 304
Safe Stop Type (No. 45) 304
Safety Mode (No. 21) 301
Safety Port Sts (No. 946) 169
Save MOP Ref (No. 559) 120
ScaleBlk Int 00 (No. 1902) 160
ScaleBlk Int 01 (No. 1906) 160
ScaleBlk Int 02 (No. 1910) 160
ScaleBlk Int 03 (No. 1914) 160
ScaleBlk Int 04 (No. 1918) 160
ScaleBlk Int 05 (No. 1922) 160
ScaleBlk Int 06 (No. 1926) 160
ScaleBlk Int 07 (No. 1930) 160
ScaleBlk Real 00 (No. 1903) 160
ScaleBlk Real 01 (No. 1907) 160
ScaleBlk Real 02 (No. 1911) 160
ScaleBlk Real 03 (No. 1915) 160
ScaleBlk Real 04 (No. 1919) 160
ScaleBlk Real 05 (No. 1923) 160
ScaleBlk Real 06 (No. 1927) 160
ScaleBlk Real 07 (No. 1931) 160
ScaleBlk Scal 00 (No. 1901) 160
ScaleBlk Scal 01 (No. 1905) 160
ScaleBlk Scal 02 (No. 1909) 160
ScaleBlk Scal 03 (No. 1913) 160
ScaleBlk Scal 04 (No. 1917) 160
ScaleBlk Scal 05 (No. 1921) 160
ScaleBlk Scal 06 (No. 1925) 160
ScaleBlk Scal 07 (No. 1929) 160
ScaleBlk Sel 00 (No. 1900) 160
ScaleBlk Sel 01 (No. 1904) 160
ScaleBlk Sel 02 (No. 1908) 160
ScaleBlk Sel 03 (No. 1912) 160
ScaleBlk Sel 04 (No. 1916) 160
ScaleBlk Sel 05 (No. 1920) 160
ScaleBlk Sel 06 (No. 1924) 160
ScaleBlk Sel 07 (No. 1928) 160
SCR Temp (No. 24) 228
Security Code (No. 18) 299
Security Parameters 156
Selected Spd Ref (No. 592) 123
Selected Trq Ref (No. 685) 133
Servo Lock Gain (No. 642) 127
Servo Motors 513, 517
Set Top ofStroke (No. 1193) 193
SFAdapt CnvrgLmt (No. 116) 69
SFAdapt CnvrgLvl (No. 115) 68
SFAdapt SlewLmt (No. 113) 68
SFAdapt SlewRate (No. 114) 68
Shear Pin Cfg (No. 434) 104
Shear Pin *n* Actn (No. 435, 438) 104
Shear Pin *n* Time (No. 437, 440) 104
Shear Pin*n* Level (No. 436, 439) 104
Signature ID (No. 10) 299
Simulator Fdbk (No. 138) 72
Single Incremental Encoder
Faults and Alarms 360
Parameters 273
Single-Phase Output Configuration 188
Skip Speed Band (No. 529) 118
Skip Speed *n* (No. 526…528) 118
SLAT Dwell Time (No. 315) 89
SLAT Err Stpt (No. 314) 89
Sleep Level (No. 352) 95
Sleep Time (No. 353) 95
Sleep Wake 94
Sleep Wake Mode (No. 350) 94
SleepWake RefSel (No. 351) 95
Slip Adapt Iqs (No. 112) 68
Slip Comp BW (No. 622) 125
Slip Compensation Parameters 125
Slip Reg Enable (No. 100) 67
Slip Reg Ki (No. 101) 67
Slip Reg Kp (No. 102) 67
Slip RPM at FLA (No. 621) 125
SLS Out Mode (No. 73) 301
SO Accel Time (No. 1591) 216
SO Cnts per Rvls (No. 1587) 216

SO Config (No. 1580) 215
SO Decel Time (No. 1592) 217
SO EPR Input (No. 1584) 216
SO Fwd Vel Lmt (No. 1593) 217
SO Offset (No. 1583) 216
SO Position Out (No. 1589) 216
SO Rev Vel Lmt (No. 1594) 217
SO Rvls Input (No. 1585) 216
SO Rvls Output (No. 1586) 216
SO Setpoint (No. 1582) 216
SO Status (No. 1581) 216
SO Unit Out (No. 1590) 216
SO Unit Scale (No. 1588) 216
Spd Err Fltr BW (No. 644) 128
Spd Loop Damping (No. 653) 129
Spd Options Ctrl (No. 635) 126
Spd Ref Filter (No. 588) 121
Spd Ref Fltr BW (No. 589) 121
Spd Ref FltrGain (No. 590) 121
Spd Ref *n* AnlgHi (No. 547, 552) 119
Spd Ref *n* AnlgLo (No. 548, 553) 119
Spd Ref *n* Mult (No. 549, 554) 119
Spd Ref *n* Sel (No. 545, 550) 119
Spd Ref *n* Stpt (No. 546, 551) 119
Spd Ref Scale (No. 555) 119
Spd Ref Sel Sts (No. 591) 122
Spd Reg Int Out (No. 654) 130
Spd Reg Neg Lmt (No. 656) 130
Spd Reg Pos Lmt (No. 655) 130
Spd Trim Source (No. 617) 124
SpdBand Intgrtr (No. 1106) 185
SpdReg AntiBckup (No. 643) 127
SpdTrimPrcRefSrc (No. 616) 124
SpdTrqPsn Mode *n* (No. 309…312) 88
Speed and Position Feedback
Block Diagram (753) 379
Block Diagram (755) 415
Speed Comp Gain (No. 666) 131
Speed Comp Out (No. 667) 131
Speed Comp Sel (No. 665) 131
Speed Compensation Parameters 131
Speed Control
Block Diagram (753) 380
Block Diagram (755) 416
Speed Control Parameters 117
Speed Dev Band (No. 1105) 185
Speed Error (No. 641) 127
Speed Hysteresis (No. 56) 305
Speed Limits Parameters 117, 118
Speed Rate Ref (No. 596) 123
Speed Ref Source (No. 930) 161
Speed Reference Parameters 119
Speed References 74
Speed Reg BW (No. 636) 126
Speed Reg Ki (No. 647) 128
Speed Reg Kp (No. 645) 128
Speed Reg Max Kp (No. 646) 128
Speed Regulation
Setting Gains for Primary and Alternate Feedback Sources 126
Speed Regulator Parameters 126
Speed Torque Position 88
Speed Trim Parameters 123
Speed Units (No. 300) 86
Spindle Orientation Configuration 215
Spindle Orientation Parameters 215, 216
SReg FB Fltr BW (No. 639) 127
SReg FB Fltr Sel (No. 637) 127
SReg FB FltrGain (No. 638) 127
SReg OutFltr BW (No. 659) 130
SReg OutFltr Sel (No. 657) 130
SReg OutFltrGain (No. 658) 130
SReg Output (No. 660) 130
SReg Trq Preset (No. 652) 129
SS Out Mode (No. 72) 301
Stab Angle Gain (No. 52) 59
Stab Volt Gain (No. 51) 59
Stability Filter (No. 50) 59
Standstill Pos (No. 49) 304
Standstill Speed (No. 48) 304
Start Acc Boost (No. 60) 62
Start At PowerUp (No. 345) 93
Start Features Parameters 92, 93
Start Inhibits (No. 933) 162
Start Owner (No. 920) 158
Start Up
Check List 17
Status Indicators 20, 314
Communication Adapters 20
Status Parameters 161
Status*n* at Fault (No. 954, 955) 171
Step *n* Accel (No. 1232…1382) 199
Step *n* Action (No. 1238…1388) 203
Step *n* Batch (No. 1236…1386) 202
Step *n* Decel (No. 1233…1383) 200
Step *n* Dig In (No. 1239…1389) 204
Step *n* Dwell (No. 1235…1385) 202
Step *n* Next (No. 1237…1387) 203
Step *n* Type (No. 1230…1380) 198
Step *n* Value (No. 1234…1384) 201
Step *n* Velocity (No. 1231…1381) 199
Stop Decel Tol (No. 51) 304
Stop Dwell Time (No. 392) 100
Stop Mode *n* (No. 370, 371) 97
Stop Mon Delay (No. 46) 304
Stop Owner (No. 919) 158
Stroke Per Min (No. 1202) 194
Stroke Pos Count (No. 1201) 194

Subnet Cfg *n* (No. 42…45) 241
Support, Product 373
SVC Boost Filter (No. 64) 62
Sync Time (No. 1122) 187
Sys Rated Amps
No. 1 – Converter 227, 232
No. 1 – Inverter 222
Sys Rated Volts
No. 2 – Converter 227, 232
No. 2 – Inverter 222

T

Technical Support
Contacting 373
Testpoint Fval *n* (No. 971…983) 176
Testpoint Lval *n* (No. 972…984) 176
Testpoint Sel *n*
No. 30, 32 – Converter 228, 233
No. 30, 32 – Inverter 223
No. 970…982 – Main Control Board 176
Testpoint Val *n*
No. 31, 33 – Converter 228, 233
No. 31, 33 – Inverter 223
Testpoints Parameters 176
To Peer Enable (No. 91) 246
To Peer Period (No. 89) 246
To Peer Skip (No. 90) 246
T00 Level (No. 22) 254, 264
T00 Level (No. 242) 80
T00 Level CmpSts (No. 23) 254, 264
T00 Level CmpSts (No. 243) 80
T00 Level Sel (No. 21) 254, 264
T00 Level Sel (No. 241) 80
T00 Off Time (No. 245) 81
T00 Off Time (No. 25) 255, 265
T00 On Time (No. 24) 254, 264
T00 On Time (No. 244) 81
T00 Sel (No. 20) 254, 264
T00 Sel (No. 240) 80
T01 Level (No. 32) 255, 265
T01 Level CmpSts (No. 33) 255, 265
T01 Level Sel (No. 31) 255, 265
T01 Off Time (No. 35) 255, 265
T01 On Time (No. 34) 255, 265
T01 Sel (No. 30) 255, 265
TorqAlarm Action (No. 1168) 190
TorqAlarm Config (No. 1169) 190
TorqAlarm Dwell (No. 1170) 190
TorqAlarm Level (No. 1171) 190
TorqAlarm LoLvl (No. 1185) 191
TorqAlarm TOActn (No. 1173) 190
TorqAlm Timeout (No. 1172) 190
Torque Boost Parameters 211
Torque Control
Block Diagram (753) 391, 392
Block Diagram (755) 433, 434
Torque Cur Fdbk (No. 5) 54
Torque Limits Parameters 132
Torque Prove 523
Torque Prove Parameters 184
Torque Reference Parameters 132
Torque Setpoint (No. 1194) 193
Torque Step (No. 686) 133
Total Gear Ratio (No. 1174) 191
Total Inertia (No. 76) 63
Traverse
Fiber Control 187
Increment and Decrement 187
Traverse Dec (No. 1124) 187
Traverse Inc (No. 1123) 187
Trim Ref *n* Sel (No. 600, 604) 123
Trim Ref *n* Stpt (No. 601, 605) 123
Trim Ref*n* AnlgHi (No. 602, 606) 124
Trim Ref*n* AnlgLo (No. 603, 607) 124
TrmPct Ref*n* AnHi (No. 610, 614) 124
TrmPct Ref*n* AnLo (No. 611, 615) 124
TrmPct Ref*n* Sel (No. 608, 612) 124
TrmPct Ref*n* Stpt (No. 609, 613) 124
Troubleshooting 311
Common Symptoms 369
Crane Setup Encoderless 474
Crane Setup with Encoder 466
Trq Adapt En (No. 107) 68
Trq Adapt Speed (No. 106) 68
Trq Comp Mode (No. 109) 68
Trq Comp Mtring (No. 110) 68
Trq Comp Regen (No. 111) 68
Trq Lmt SlewRate (No. 1104) 185
Trq Prove Cfg (No. 1100) 184
Trq Prove Setup (No. 1101) 184
Trq Prove Status (No. 1103) 185
Trq Ref *n* AnlgHi (No. 677, 682) 132
Trq Ref *n* AnlgLo (No. 678, 683) 132
Trq Ref *n* Mult (No. 679, 684) 132
Trq Ref *n* Sel (No. 675, 680) 132
Trq Ref *n* Stpt (No. 676, 681) 132
Type 2 Alarms (No. 961) 174

U

UnderVltg Action (No. 460) 107
UnderVltg Level (No. 461) 107
Units Traveled (No. 1212) 195
Universal Feedback Module
Parameters 281
User Home Psn (No. 738) 143
UserData Int 00...31 (No. 1700...1731) 160
UserData Int 00...31 (No. 1800...31) 160

V

VB Accel Rate (No. 1541) 214
VB Config (No. 1535) 213
VB Cur Thresh (No. 1550) 215
VB Current Hyst (No. 1549) 215
VB Current Rate (No. 1548) 215
VB Decel Rate (No. 1542) 214
VB Filt Flux Cur (No. 1547) 214
VB Flux Lag Freq (No. 1546) 214
VB Flux Thresh (No. 1545) 214
VB Frequency (No. 1543) 214
VB Maximum (No. 1540) 214
VB Min Freq (No. 1544) 214
VB Minimum (No. 1539) 214
VB Rate Lag Freq (No. 1551) 215
VB Status (No. 1536) 213
VB Time (No. 1538) 214
VB Voltage (No. 1537) 213
VCL Cur Reg BW (No. 95) 67
VCL Cur Reg Ki (No. 97) 67
VCL Cur Reg Kp (No. 96) 67
Vector Regulation Parameters 67
Velocity Feedback 71
VEncdls FReg Ki (No. 99) 67
VEncdls FReg Kp (No. 98) 67
Vendor Password (No. 19) 299
VHz Curve (No. 65) 62
VHzSV Spd Reg Ki (No. 664) 130
VHzSV Spd Reg Kp (No. 663) 130
VHzSV SpdTrimReg (No. 623) 125
Viewing Parameters 319
Virtual Enc EPR (No. 141) 72
Virtual Enc Psn (No. 142) 72
Virtual EncDelay (No. 140) 72
Voltage Class (No. 305) 87
Voltage Tolerance 455
Volts per Hertz Parameters 62

W

Wake Level (No. 354) 95
Wake Time (No. 355) 95
Web Enable (No. 52) 242
Web Features (No. 53) 242
Write Mask Act (No. 887) 156
Write Mask Cfg (No. 888) 156

Z

Zero Position (No. 725) 140
Zero Speed Limit (No. 525) 117
ZeroSpdFloatTime (No. 1113) 186

Rockwell Automation Support

Use the following resources to access support information.

Technical Support Center	Knowledgebase Articles, How-to Videos, FAQs, Chat, User Forums, and Product Notification Updates.	https://rockwellautomation.custhelp.com/
Local Technical Support Phone Numbers	Locate the phone number for your country.	http://www.rockwellautomation.com/global/support/get-support-now.page
Direct Dial Codes	Find the Direct Dial Code for your product. Use the code to route your call directly to a technical support engineer.	http://www.rockwellautomation.com/global/support/direct-dial.page
Literature Library	Installation Instructions, Manuals, Brochures, and Technical Data.	http://www.rockwellautomation.com/global/literature-library/overview.page
Product Compatibility and Download Center (PCDC)	Get help determining how products interact, check features and capabilities, and find associated firmware.	http://www.rockwellautomation.com/global/support/pcdc.page

Documentation Feedback

Your comments will help us serve your documentation needs better. If you have any suggestions on how to improve this document, complete the How Are We Doing? form at http://literature.rockwellautomation.com/idc/groups/literature/documents/du/ra-du002_-en-e.pdf.

Rockwell Automation maintains current product environmental information on its website at http://www.rockwellautomation.com/rockwellautomation/about-us/sustainability-ethics/product-environmental-compliance.page.

Allen-Bradley, Connected Components Workbench, DeviceLogix, DPI, DriveExecutive, DriveExplorer, DriveTools, Kinetix, PowerFlex, Rockwell Automation, Rockwell Software, RSLogix 5000, RSNetWorx, SCANPort, Studio 5000 Logix Designer, and TorqProve are trademarks of Rockwell Automation, Inc.

Rockwell Otomasyon Ticaret A.Ş., Kar Plaza İş Merkezi E Blok Kat:6 34752 İçerenköy, İstanbul, Tel: +90 (216) 5698400

www.rockwellautomation.com

Power, Control and Information Solutions Headquarters

Americas: Rockwell Automation, 1201 South Second Street, Milwaukee, WI 53204-2496 USA, Tel: (1) 414.382.2000, Fax: (1) 414.382.4444
Europe/Middle East/Africa: Rockwell Automation NV, Pegasus Park, De Kleetlaan 12a, 1831 Diegem, Belgium, Tel: (32) 2 663 0600, Fax: (32) 2 663 0640
Asia Pacific: Rockwell Automation, Level 14, Core F, Cyberport 3, 100 Cyberport Road, Hong Kong, Tel: (852) 2887 4788, Fax: (852) 2508 1846

Publication 750-PM001O-EN-P - November 2018
Supersedes Publication 750-PM001N-EN-P - February 2017

PN-511186

Copyright © 2018 Rockwell Automation, Inc. All rights reserved. Printed in the U.S.A.

APPENDIX K

QUALITY CONTROL TESTING

Job #: 19009

Time On Site: 7:00 AM
Time Off Site: 10:00 AM

SOIL MECHANICS DRILLING CORP.
3770 MERRICK ROAD • SEAFORD, L.I. NEW YORK 11783
(516) 221-2333 • FAX (516) 221-0254
AASHTO Accreditation No. 4669 NYC Concrete Testing Lab License No. 28

Fill Placement/In-Place Density Inspection Field Report

Client: CDM Smith	Date: April 5, 2021		
Contractor: Enviro-Trac		AM	PM
Project: 60 Tanners Rd Lake Success	Air Temp	45	
Location(s) Worked: AKA - 1111 Marcus Ave. Lake Success	Weather	Sunny	
OU2 RW100 Vault			

Drawing(s) Referenced:

On site PM (Rob) provided all info

Soils Encountered:

☐ Fill ☒ Sands ☒ Silts ☐ Clay ☐ Rock ☐ Obstructions

Method of Compaction: Plate compactor

Type of test performed: ☐ Nuclear Density (ASTM D6938) ☒ Sand Cone (ASTM D1556)

Results of Test: 98

Test Results Attached? : ☐ YES ☒ NO

Lift Thickness: 9" | Lift Elevations: 00

Additional Comments:

I performed 1 ASTM 1556 sand and cone density test for the location noted above, work area was previously compacted and ready for testing upon arrival.

Test was performed at 00 and has reached and or exceeded the required 95% density.

Inspector: Andrew Katsalas | ID #: 8165169

Ver. 11/10/16

SUBSOIL INVESTIGATIONS

SOIL MECHANICS DRILLING CORP.

3770 MERRICK RD. • SEAFORD, L.I., NEW YORK 11783
(516) 221-2333 • FAX (516) 679-4373
AASHTO Accreditation No. 4669
NYC Concrete Testing Lab License No. 28

Material Is In Compliance With Project Plans and Specifications.

REPORT OF CONCRETE INSPECTION AND TESTING

CLIENT: CDM Smith, 75 State Street, Suite 701, Boston, MA 02109

PROJECT LOCATION: Lockheed Martin, 1111 Marcus Ave, Lake Success

GENERAL CONTRACTOR:

CONCRETE CONTRACTOR: CDM Smith

REPORT NO: 2
JOB NO.: 19-008
SHEET: 2 OF 2

SM CYL ID NO: 2100416

DATE OF INSPECTION: April 7, 2021
WEATHER: Mostly cloudy
AIR TEMP.: AM 46/ PM 70

BATCH PLANT INSPECTION

CONCRETE PRODUCER:

MATERIALS	BATCH WEIGHTS (LB/CY)	SOURCE AND TYPE	SPECIFIED COMPRESSIVE STRENGTH AT 28 DAYS
CEMENT			4000
FINE AGGREGATE			
COARSE AGGREGATE			CUBIC YARDS
WATER (GALS.)			
ADMIXTURE			

AGGREGATE GRADATION
Cumulative Per Cent Finer

	FINE AGGREGATE		COARSE AGGREGATE	
3/8"				
#4				
#8				
#16				
#30				
#50				
#100				
FM			**FM**	
MOISTURE			MOISTURE	

FIELD INSPECTION

LOCATION OF PLACEMENT: *(NOTE: TEST RESULTS RELATE ONLY TO THE LOCATIONS LISTED BELOW)*

Location A:	Location B:	Location C:
Floor slab, electrical vault pad		

Min./Max. Temp. of Mortar (Req. for Mortar Samples Per ASTM C780/780M) — Minimum: — Maximum:

Cylinders were cured by Standard Curing Method per ASTM C31 unless otherwise noted.

TEST SPEC. AVG. 4.02" DIA. BY 8.00" HT.
AREA 12.692 SQ.IN. UNLESS NOTED

ASTM	C-143	C-231	C-1064	C-138				C-39				
SEAL NO.	SLUMP (inches)	AIR (%)	TEMP. CONC. (°)	UNIT WEIGHT (pcf)	AGE (days)	DATE OF TEST	TOTAL LOAD	COMP. STRENGTH (p.s.i.)	BREAK TYPE	MEASURED DIAMETER OF CYLINDER	GENERAL LOCATION	SPECIFIC LOCATION (SEE ABOVE)
2100416.01					7	04/14/21	51210	4040	4	4.02	Slab	Location A
2100416.02					28	05/05/21	61190	4820	3	4.02	Slab	Location A
2100416.03					28	05/05/21	60990	4810	2	4.02	Slab	Location A
2100416.04					28	05/05/21	63440	5000	4	4.02	Slab	Location A

REMARKS: Cylinders tested with unbonded caps, Top & Bottom, per ASTM C1231
Sampling conducted in accordance with ASTM C172

*** No defects in test specimens.**

Rob Hill (ACI # 00049686) — CYLINDER TESTED BY
Other than SMDC — FIELD INSPECTOR
ACI # —
SOIL MECHANICS DRILLING CORP

THIS REPORT SHALL NOT BE REPRODUCED, EXCEPT IN FULL, WITHOUT THE PRIOR WRITTEN APPROVAL OF SOIL MECHANICS DRILLING CORP.

To whom it may concern,

Tilcon New York Inc. West Nyack Quarry is a New York State DOT approved material source. The Source Number is 8-8R. This source is 100% virgin Traprock (Diabase) that is quarried and processed to finished sizes. To the best of our knowledge it is clean and free from contaminants, prior to shipping.

The following gradation is provided for NYSDOT Item 304, Crushed Stone Subbase. This product would comply with the requirements for all four types of Subbase.

Sieve Size	%Pass	Type 1(0.11)	Type 2(0.12)	Type 3(0.13)	Type 4(0.14)
4'	100			100	
3'	100	100			
2'	100	90-100	100		100
1'	99				
¾	88				
½	74				
¼	56	30-65	25-60	30-75	30-65
#4	50				
#10	34				
#20	25				
#30	21				
#40	18	5-40	5-40	5-40	5-40
#80	11				
#200	7	0-10	0-10	0-10	0-10

This product is 100% Surge Fines from the crushing operation.

Please contact me with any questions regarding this product.

Yours truly,

Robert Patton
Quality Control

APPENDIX L

RECORD DRAWINGS

UNAUTHORIZED ALTERATION OR ADDITION TO THIS DOCUMENT IS A VIOLATION OF SECTION 7209 OF THE NEW YORK STATE EDUCATION LAW.

OPERABLE UNITS NO. 1 & 2
EXTRACTION / RECOVERY WELL ELECTRICAL UPGRADES

RECORD DRAWINGS - SEPTEMBER 2021

LOCKHEED MARTIN CORPORATION
FORMER UNISYS SITE
LAKE SUCCESS, NEW YORK

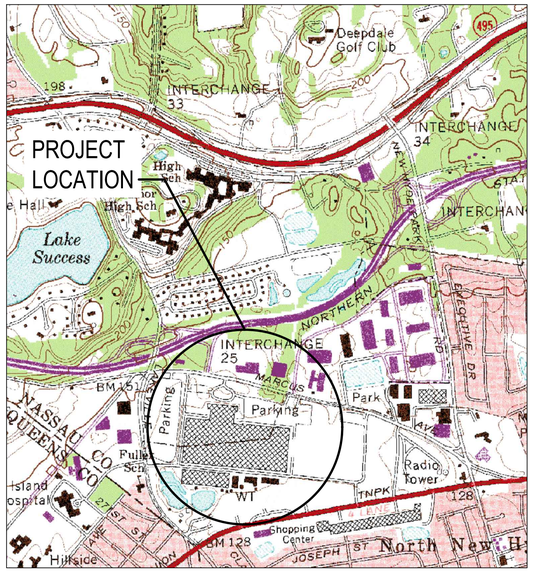

REFERENCE BASE MAP USGS 7.5 MINUTE QUADRANGLE,,
SEA CLIFF, NEW YORK, 1968 (PHOTO REVISED 1979)

LOCATION MAP

0 4000' 8000'
SCALE IN FEET



DRAWING INDEX		
REV. BY AMEC	DWG NO.	DRAWING TITLE
		GENERAL
•	G-001	Cover Sheet
•	G-002	Sheet Index, General Site Legend and Notes
		PROCESS
•	D-600	Process and Instrumentation Diagram Legend
•	D-601	OU1 Process and Instrumentation Diagram Extraction/Recovery Wells
•	D-611	OU2 Process and Instrumentation Diagram Treatment Building Water Side
		ELECTRICAL
•	E-001	Electrical Legend, Abbreviations, and General Notes
•	ES-100	Overall Site Plan
•	ES-111	OU2 RW-100 and GWTS Site Plan
•	ES-112	Treatment Building Staging Area
•	ED-101	OU1 Demolition Plans and Sections
•	ED-111	OU2 Demolition Plans and Sections
•	E-102	OU1 Treatment Building Electrical Layout
•	E-103	Well RW-1RS Vault Electrical Plan
•	E-104	Well RW-1RD Vault Elevctrical Plan
•	E-105	Well EW-1 Vault Electrical Plan
•	E-111	OU2 Plans and Sections
•	E-112	OU2 Treatment Building Electrical Layout
•	E-113	Well RW-100 Vault Electrical Plan
•	E-500	Electrical Panels & Support Elevations
•	E-501	Electrical Panel & Support Details
•	E-601	OU1 Single Line Diagram and Panelboard Schedules
•	E-602	OU1 Wells Power, Controls, & Instrumentation Riser Diagrams
•	E-605	OU1 Wells Cable Schedule
•	E-611	OU2 Single Line Diagram and Panelboard Schedule
•	E-612	OU2 Well RW-100 Power, Controls, & Instrumentation Riser Diagram
•	E-615	OU2 Well RW-100 Cable Schedule
		INSTRUMENTATION
•	EI-001	Instrumentation Legend, Abbreviations, and General Notes
•	EI-101	Instrumentation Network System Architecture
•	EI-600	OU1 System Architecture
•	EI-601	OU2 System Architecture
•	EI-603	OU1 MCP-100 Bill of Materials
•	EI-604	OU1 MCP-100 Sub Panel Layout
•	EI-607	OU1 MCP-100 Slots 1 and 2 Wiring Diagrams
•	EI-609	OU1 MCP-100 Power & Control Wiring Diagram III
•	EI-621	Well RW-1RS Remote Control Panel Layout
•	EI-622	Well RW-1RS Remote Control Panel Bill of Materials

DRAWING INDEX		
REV. BY AMEC	DWG NO.	DRAWING TITLE
		INSTRUMENTATION
•	EI-623	Well RW-1RS Remote Control Panel Power Distribution Schematic
•	EI-624	Well RW-1RS Remote Control Panel Digital I/O Schematic
•	EI-625	Well RW-1RS Remote Control Panel Analog I/O Schematic
•	EI-626	Well RW-1RS Remote Control Panel Interconnection Wiring Diagram
•	EI-641	Well RW-1RD Remote Control Panel Layout
•	EI-642	Well RW-1RD Remote Control Panel Bill of Materials
•	EI-643	Well RW-1RD Remote Control Panel Power Distribution Schematic
•	EI-644	Well RW-1RD Remote Control Panel Digital I/O Schematic
•	EI-645	Well RW-1RD Remote Control Panel Analog I/O Schematic
•	EI-646	Well RW-1RD Remote Control Panel Interconnection Wiring Diagram
•	EI-661	Well EW-1R Remote Control Panel Layout
•	EI-662	Well EW-1R Remote Control Panel Bill of Materials
•	EI-663	Well EW-1R Remote Control Panel Power Distribution Schematic
•	EI-664	Well EW-1R Remote Control Panel Digital I/O Schematic
•	EI-665	Well EW-1R Remote Control Panel Analog I/O Schematic
•	EI-666	Well EW-1R Remote Control Panel Interconnection Wiring Diagram
•	EI-670	Well RW-100 SP-1 VFD Panel Layout
•	EI-671	Well RW-100 SP-1 VFD Panel Sub Panel Layout
•	EI-672	Well RW-100 SP-1 VFD Panel Bill of Materials
•	EI-673	Well RW-100 SP-1 VFD Panel Power Distribution Schematic
•	EI-674	Well RW-100 SP-1 VFD Panel VFD Controls Schematic
•	EI-675	Well RW-100 SP-1 VFD Panel VFD Controls Schematic
•	EI-680	Well RW-100 Remote Control Panel Panel Layout
•	EI-681	Well RW-100 Remote Control Panel Panel Layout
•	EI-682	Well RW-100 Remote Control Panel Bill of Materials
•	EI-683	Well RW-100 Remote Control Panel Bill of Materials
•	EI-684	Well RW-100 Remote Control Panel Power Distribution Schematic
•	EI-685	Well RW-100 Remote Control Panel Power Distribution Schematic
•	EI-686	Well RW-100 Remote Control Panel Digital I/O Schematic
•	EI-687	Well RW-100 Remote Control Panel Analog I/O Schematic
•	EI-688	Well RW-100 Remote Control Panel Interconnection Wiring Diagram
•	EI-689	Well RW-100 Remote Control Panel Interconnection Wiring Diagram Sheet 2
•	EI-690	RW-3 Remote Control Panel Panel Arrangement Modifications
•	EI-691	RW-3 Remote Control Panel Bill of Materials
•	EI-692	RW-3 Remote Control Panel Power Wiring Schematic Modifications
•	EI-695	Main Control Panel (MCP) Communications Network Modifications
•	EI-696	Main Control Panel (MCP) Wiring Diagram 5 - Slots 3,4,5 & 6
•	EI-697	MCC Active Filter Status Signal Connection to PLC's at OU1 and OU2



THE SIGNATURE AND SEAL OF THE UNDERSIGNED ON THIS DRAWING CERTIFIES THAT THE DESIGN INFORMATION CONTAINED IN THESE DRAWINGS ACCURATELY REFLECTS THE ORIGINAL DESIGN AND THE MATERIAL DESIGN CHANGES MADE DURING CONSTRUCTION, THAT WERE BROUGHT TO THE UNDERSIGNED'S ATTENTION. THESE DRAWINGS ARE INTENDED TO INCORPORATE ADDENDA, CHANGE ORDERS AND OTHER MATERIAL DESIGN CHANGES, BUT NOT NECESSARILY ALL SITE INSTRUCTIONS. THE UNDERSIGNED DOES NOT WARRANT OR GUARANTEE, NOR ACCEPT ANY RESPONSIBILITY FOR THE ACCURACY OR COMPLETENESS OF THE CONSTRUCTION RECORD INFORMATION SUPPLIED BY OTHERS CONTAINED IN THESE DRAWINGS, BUT DOES CERTIFY THAT THE CONSTRUCTION RECORD INFORMATION, IF ACCURATE AND COMPLETE, PROVIDES A SYSTEM WHICH SUBSTANTIALLY COMPLIES IN ALL MATERIAL RESPECTS WITH THE ORIGINAL DESIGN INTENT."

NO.	DATE	REVISIONS	BY	CHK
	9/03/21	RECORD DRAWINGS	SCP	REM

DRAWN: NJG	PROJECT NO: 3617197453		
ENGINEER: SCP	SCALE: AS NOTED		
CHECKED: REM	APPROVED: S. PEARSON		
DATE: 10/04/19	DATE: 10/04/19		

amec
AMEC E & E PC
214-25 42nd Ave
Bayside, New York 11361

LOCKHEED MARTIN CORPORATION,
FORMER UNISYS FACILITY,
LAKE SUCCESS, NEW YORK
OPERABLE UNITS NO. 1 & 2
EXTRACTION / RECOVERY WELL ELECTRICAL UPGRADES

GENERAL

COVER SHEET

G-001

C:\Users\roger.rigler\Wood PLC\Lockheed Martin Great Neck - R.A. Drawings\Rev. Electrical Upgrade Design\Sheets\G-001.dwg Wed, 01 Sep 2021 - 1:43pm roger.rigler

UNAUTHORIZED ALTERATION OR ADDITION TO THIS DOCUMENT IS A VIOLATION OF SECTION 7209 OF THE NEW YORK STATE EDUCATION LAW.

ABBREVIATIONS

EW	EXTRACTION WELL
RW	RECOVERY WELL
DW	DIFFUSION WELL
GL	LOWER PORTION OF GLACIAL AQUIFER
MI	UPPER PORTION OF MAGOTHY AQUIFER
MM	MIDDLE PORTION OF MAGOTHY AQUIFER
GWTS	GROUND WATER TREATMENT SYSTEM

GENERAL LEGEND:

——— X ———	FENCE
– – – UE – – –	EXISTING UNDERGROUND ELECTRIC SERVICE
– – – E – – –	EXISTING ELECTRIC SERVICE
– – – W – – –	EXISTING WATER SERVICE
═══	CURB LINE
☼	UTILITY POLE

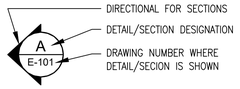

GENERAL NOTES:

1. LOCATION OF WORK: ALL WORK DESCRIBED IN THESE DRAWINGS AND ACCOMPANYING TECHNICAL SPECIFICATIONS WAS PERFORMED ON BEHALF OF LOCKHEED MARTIN CORPORATION AT THE FORMER UNISYS FACILITY, LAKE SUCCESS, NEW YORK.
2. THE CONTRACTOR SHALL VISIT THE SITE AND EXAMINE ALL OF THE PHYSICAL CONDITIONS THAT AFFECT THE FINAL BID PRICE.
3. THE CONTRACTOR SHALL OBTAIN ALL NECESSARY FIELD MEASUREMENTS TO VERIFY THE ABILITY TO EXECUTE THE WORK IN ACCORDANCE WITH THIS SCOPE OF WORK AND DRAWINGS. NO ADDITIONS OR REVISIONS TO THE BID OR CONTRACT PRICE WILL BE PERMITTED BASED ON IGNORANCE OF THE EXISTING CONDITIONS.
4. THE CONTRACTOR SHALL PROVIDE ALL LABOR, MATERIAL, AND EQUIPMENT, UNLESS OTHERWISE STATED, NECESSARY TO PERFORM THIS WORK.
5. THE CONTRACTOR SHALL BE RESPONSIBLE FOR OBTAINING ALL TRADE PERMITS, AND APPROVALS NECESSARY TO PERFORM THIS WORK. EXCEPT AS NOTED IN THE SPECIFICATIONS.
6. ALL INFORMATION PRESENTED IN THIS REQUEST REGARDING THE SITE OR LOCKHEED MARTIN CORPORATION IS CONFIDENTIAL.
7. WHILE CONSTRUCTION ACTIVITIES ARE UNDER WAY AT LEAST ONE CONTRACTOR FOREMAN, OR CREW SUPERVISOR SHALL BE PRESENT AT THE JOB SITE AT ALL TIMES.
8. THE CONTRACTOR SHALL SEGREGATE ALL EXCAVATED MATERIALS INTO TWO CATEGORIES: CONCRETE/ASPHALT MATERIAL AND SOIL MATERIAL. CONCRETE/ASPHALT MATERIAL SHALL BE DISPOSED OF BY CONTRACTOR. SOIL MATERIAL WILL BE RETAINED FOR POSSIBLE RE-USE. ANY REMAINING SOIL, FOLLOWING RE-USE, WILL THEN BE DISPOSED OF IN ACCORDANCE WITH THE SOIL MANAGEMENT PLAN FOR THE SITE.
9. PRIOR TO ANY EXCAVATION, ALL UTILITY SERVICES ARE TO BE LOCATED, THE USER NOTIFIED, AND MEASURES TAKEN TO PROTECT LINES. CONTRACTOR SHALL CONTACT ALL UTILITY COMPANIES TO SECURE THE MOST ACCURATE AND RECENT INFORMATION AS TO UTILITY LOCATIONS. THE INFORMATION SHOWN ON THE DRAWINGS CONCERNING TYPE AND LOCATION OF UNDERGROUND UTILITIES IS NOT GUARANTEED TO BE ACCURATE OR ALL INCLUSIVE. THE CONTRACTOR IS RESPONSIBLE FOR MAKING THEIR OWN DETERMINATIONS AS TO THE TYPE AND LOCATION OF UNDERGROUND UTILITIES AS MAY BE NECESSARY TO AVOID DAMAGE THERETO. THE CONTRACTOR SHALL BE RESPONSIBLE FOR THE REPAIR, AND PROTECTION OF UTILITIES DAMAGED ON SITE.
10. CONTRACTOR IS RESPONSIBLE FOR PROVIDING THE ENGINEER WITH ALL INFORMATION REQUIRED TO COMPLETE A SET OF "RECORD" DRAWINGS BY KEEPING A RECORD SET OF DAILY PROGRESSION OF WORK.
11. UNLESS OTHERWISE NOTED, RESTORE ALL AREAS DISTURBED BY THIS WORK TO ORIGINAL OR BETTER CONDITION.
12. CONTRACTOR TO PROTECT AND PRESERVE ALL EXISTING FEATURES (I.E. MONITORING WELLS, EQUIPMENT, PIPING, GARBAGE CANS, PICNIC TABLES, ETC.) WITHIN AREAS AFFECTED BY CONSTRUCTION. DAMAGE SUSTAINED BY AN EXISTING FEATURE WILL BE REPAIRED/REPLACED AT CONTRACTOR'S EXPENSE.
13. THE CONTRACTOR SHALL PERFORM ALL WORK IN ACCORDANCE WITH ALL LOCAL, STATE, AND FEDERAL REGULATIONS, INCLUDING, BUT NOT LIMITED TO, ALL APPLICABLE LOCAL, STATE, AND/OR FEDERAL (OSHA AND USEPA) RULES AND REGULATIONS. THE CONTRACTOR SHALL ADHERE TO ALL HEALTH AND SAFETY POLICIES OF LOCKHEED MARTIN CORPORATION.
14. UNLESS OTHERWISE INDICATED HEREIN, ALL MATERIALS AND EQUIPMENT FURNISHED UNDER THIS CONTRACT SHALL BE NEW, FREE FROM DEFECTS, AND SHALL BE GUARANTEED FOR A PERIOD OF AT LEAST ONE YEAR FROM SUBSTANTIAL COMPLETION. THE CONTRACTOR SHALL FURNISH, AT NO COST TO LOCKHEED MARTIN CORP. OR THE ENGINEER, ALL LABOR AND MATERIALS NECESSARY TO CORRECT PROBLEMS DUE TO FAULTY WORKMANSHIP OR MATERIALS.
15. OTHER CONSTRUCTION ACTIVITIES MAY BE TAKING PLACE CONCURRENTLY WITH THIS PROJECT. THE CONTRACTOR SHALL CONSULT WITH THE ENGINEER AND SHALL COORDINATE SCHEDULES.
16. TOPOGRAPHIC SITE MAP BASED ON BENNETT, BONACCI & VAN WHEELER, P.C., DATED JUNE 4, 1998, UPDATED WITH THE SEAR BROWN GROUP PARTIAL SURVEY (PREPARED BY THOMAS M. SCHMIDT, P.E., N.Y. LICENSED LAND SURVEYOR, LIC. NO. 050221), DATED 1-21-00 (PROJECT #1631843) AND CAMERON ENGINEERING & ASSOCIATES, L.L.P., iPARK SITE PLAN APPROVAL DRAWINGS DATED DECEMBER 2000 AND REVISED FEBRUARY 2001 (PROJECT #CE 6114). ALL SITE FEATURE LOCATIONS ARE APPROXIMATE.
17. CONTRACTOR TO MAINTAIN UTILITY SERVICES TO BUILDINGS TO REMAIN. IF UTILITY SERVICES MUST BE INTERRUPTED THE CONTRACTOR SHALL COORDINATE THAT SHUTDOWN TO MINIMIZE IMPACT TO BUILDINGS. COORDINATE SHUTDOWN AT LEAST ONE WEEK IN ADVANCE WITH OWNERS' REPRESENTATIVE.
18. IF UTILITY SERVICES MUST BE INTERRUPTED THE CONTRACTOR SHALL COORDINATE WITH UTILITY COMPANIES AND OWNERS' (LOCKHEED MARTIN AND NORTHWELL) REPRESENTATIVE TO ASSURE THAT INTERRUPTED SERVICES ARE ON-LINE AS AGREED.
19. THE CONTRACTOR IS RESPONSIBLE TO MAINTAIN SAFE ACCESS TO PEDESTRIAN AND VEHICULAR TRAFFIC. THE CONTRACTOR IS RESPONSIBLE TO MAINTAIN SAFE ACCESS TO EMERGENCY AND HEALTH SAFETY AGENCIES. IF ACCESS WILL BE COMPROMISED IT WILL BE THE RESPONSIBILITY OF THE CONTRACTOR TO COORDINATE AT LEAST ONE WEEK IN ADVANCE WITH THE OWNERS' (LOCKHEED MARTIN AND NORTHWELL) REPRESENTATIVE AND EMERGENCY AND HEALTH SAFETY AGENCIES.
20. CONTRACTOR SHALL CALL NEW YORK 811 (1-800-272-4480), AS WELL AS FOLLOW ALL LOCKHEED MARTIN DIG PERMIT REQUIREMENTS PRIOR TO THE START OF ANY WORK, INCLUDING MONITORING, MOVEMENT, AND DISPOSAL OF SOIL ON AND OFF SITE AND GPR OR AREAS FOR UNDERGROUND EXPLORATION.
21. EXISTING GRADING AND DRAINAGE ELEVATIONS AND ALL EXISTING CONDITIONS SHALL BE MAINTAINED AFTER CONSTRUCTION UNLESS OTHERWISE SHOWN ON PLANS.
22. BEST MANAGEMENT PRACTICES AND SEDIMENT ANT EROSION CONTROL METHODS SHALL BE MAINTAINED THROUGHOUT PROJECT. THE SEDIMENT AND EROSION CONTROL METHODS SHOWN ON THESE PLANS ARE MEANT TO BE A GUIDE AND ARE ONLY MINIMUM REQUIREMENTS. THE OWNER MAY REQUIRE ADDITIONAL SEDIMENT AND EROSION CONTROL DURING THE CONSTRUCTION PERIOD IF NECESSARY. ALL SEDIMENT AND EROSION CONTROL METHODS SHALL BE INSTALLED AND MAINTAINED ACCORDING TO THESE DRAWINGS, AND THE TECHNICAL SPECIFICATIONS.



THE SIGNATURE AND SEAL OF THE UNDERSIGNED ON THIS DRAWING CERTIFIES THAT THE DESIGN INFORMATION CONTAINED IN THESE DRAWINGS ACCURATELY REFLECTS THE ORIGINAL DESIGN AND THE MATERIAL DESIGN CHANGES MADE DURING CONSTRUCTION, THAT WERE BROUGHT TO THE UNDERSIGNED'S ATTENTION. THESE DRAWINGS ARE INTENDED TO INCORPORATE ADDENDA, CHANGE ORDERS AND OTHER MATERIAL DESIGN CHANGES, BUT NOT NECESSARILY ALL SITE INSTRUCTIONS. THE UNDERSIGNED DOES NOT WARRANT OR GUARANTEE, NOR ACCEPT ANY RESPONSIBILITY FOR THE ACCURACY OR COMPLETENESS OF THE CONSTRUCTION RECORD INFORMATION SUPPLIED BY OTHERS CONTAINED IN THESE DRAWINGS, BUT DOES CERTIFY THAT THE CONSTRUCTION RECORD INFORMATION, IF ACCURATE AND COMPLETE, PROVIDES A SYSTEM WHICH SUBSTANTIALLY COMPLIES IN ALL MATERIAL RESPECTS WITH THE ORIGINAL DESIGN INTENT."

NO.	DATE	REVISIONS	BY	CHK
	9/03/21	RECORD DRAWINGS	SCP	REM

DRAWN: NJG	PROJECT NO: 3617197453
ENGINEER: SCP	SCALE: AS NOTED
CHECKED: REM	APPROVED: S. PEARSON
DATE: 10/04/19	DATE: 10/04/19

amec
AMEC E & E PC
214-25 42nd Ave
Bayside, New York 11361

LOCKHEED MARTIN CORPORATION,
FORMER UNISYS FACILITY,
LAKE SUCCESS, NEW YORK
OPERABLE UNITS NO. 1 & 2
EXTRACTION / RECOVERY WELL ELECTRICAL UPGRADES

GENERAL

GENERAL SITE LEGEND AND NOTES

G-002

C:\Users\roger.rquier\Wood PLC\Lockheed Martin Great Neck - 8.0_Drawings\Rev Electrical Upgrade Design\Sheets\G-002.dwg Wed, 01 Sep 2021 - 1:32pm roger.rquier

UNAUTHORIZED ALTERATION OR ADDITION TO THIS DOCUMENT IS A VIOLATION OF SECTION 7209 OF THE NEW YORK STATE EDUCATION LAW.

	IDENTIFICATION LETTERS				
	FIRST LETTER		SUCCEEDING LETTERS		
	MEASURED OR INITIATING VARIABLE	MODIFIER	READOUT OR PASSIVE FUNCTION	OUTPUT FUNCTION	MODIFIER
A	ANALYSIS		ALARM		ADVISORY
C	USER'S CHOICE COMMUNICATION	CONTROL			
D	USER'S CHOICE	DIFFERENTIAL			
E	VOLTAGE		SENSOR (PRIMARY ELEMENT)		
F	FLOW RATE	RATIO (FRACTION)			FAILURE
H	HAND				HIGH
I	CURRENT (ELECTRICAL)		INDICATE		
J	POWER	SCAN			
K	TIME, TIME SCHEDULE	TIME RATE OF CHANGE		CONTROL STATION	
L	LEVEL		LIGHT		LOW
P	PRESSURE (VACUUM)		POINT (TEST) CONNECTION		
Q	QUANTITY	INTEGRATE, TOTALIZE			
R	REMOTE				
RH	RELATIVE HUMIDITY				
S	SPEED, FREQUENCY	SAFETY		SWITCH	
T	TEMPERATURE			TRANSMIT	
V	VIBRATION, MECHANICAL ANALYSIS			VALVE, DAMPER, LOUVER	
W	WEIGHT, FORCE, TORQUE			WELL	
X	USER'S CHOICE			EXTREME	
Y	EVENT, STATE OR PRESENCE	Y AXIS		RELAY, COMPUTE, CONVERT	
Z	POSITION, DIMENSION	Z AXIS		DRIVER, ACTUATOR, UNCLASSIFIED FINAL CONTROL ELEMENT	

GENERAL INSTRUMENT OR FUNCTION SYMBOLS			
DISCRETE INSTRUMENTS	PRIMARY LOCATION NORMALLY ACCESSIBLE TO OPERATOR **	FIELD MOUNTED	AUXILIARY LOCATION NORMALLY ACCESSIBLE TO OPERATOR **
DISCRETE INSTRUMENTS	1 IPI *	2	3
SHARED DISPLAY, SHARED CONTROL	4	5	6
COMPUTER FUNCTION	7	8	9
PROGRAMMABLE LOGIC CONTROL	10	11	12

* ABBREVIATIONS OF THE USER'S CHOICE SUCH AS IPI (INSTRUMENT PANEL # 1), IC2 (INSTRUMENT CONSOLE #2) CC3 (COMPUTER CONSOLE #3), ETC. MAY BE USED WHEN IT IS NECESSARY TO SPECIFY INSTRUMENT OR FUNCTION LOCATION.

** NORMALLY INACCESSIBLE OR BEHIND-THE-PANEL DEVICES OR FUNCTIONS MAY BE DEPICTED BY USING THE SAME SYMBOLS BUT WITH DASHED HORIZONTAL BARS, I.E.

*** THE LETTER A BELOW AN ALARM LIGHT MEANS ADVISORY ONLY.

ABBREVIATIONS:

AWG	AMERICAN WIRE GAUGE
C–X	CONTROL CONDUIT
CKT	CIRCUIT
G	REMOTE CONTROL PANEL
GFCI	GROUND FAULT CIRCUIT INTERRUPTER
GWTS	GROUND WATER TREATMENT SYSTEM
HCP	HEATER CONTROL PANEL
I–X	INSTRUMENTATION CONDUIT
MCC	MOTOR CONTROL CENTER
M.C.P.	MOTOR CIRCUIT PROTECTOR(S)
MCP	MAIN CONTROL PANEL
OU1	OPERATING UNIT NUMBER 1
OU2	OPERATING UNIT NUMBER 2
P–X	POWER CONDUIT (480 OR 120/240)
PNL	PANEL
PVC	POLYVINYL CHLORIDE
RCP	REMOTE CONTROL PANEL
RGS	RIGID GALVANIZED STEEL
RW–X	RAW WATER X–INDICATES WELL DESIGNATION
S.N.	SERVICE NEUTRAL
SSDS	SUB-SLAD DEPRESSURIZATION SYSTEM
TM	THERMAL–MAGNETIC
WP	WEATHER PROOF

GENERAL LEGEND:

FIBER OPTIC
DH+ SIGNAL
ETHERNET SIGNAL
TELEPHONE SIGNAL
ELECTRONIC SIGNAL LEAK DETECTION
CONTROL PANEL INPUT/OUTPUT
AMBIENT AIR
FLOW DIRECTION
CHECK VALVE
FLANGED CHECK VALVE
GATE VALVE
FLANGED GATE VALVE (NORMALLY OPEN)
FLANGED GATE VALVE (NORMALLY CLOSED)
BALL VALVE (NORMALLY OPEN)
BALL VALVE (NORMALLY CLOSED)
FLANGED BALL VALVE (NORMALLY OPEN)
BUTTERFLY VALVE (NORMALLY OPEN)
BUTTERFLY VALVE (NORMALLY CLOSED)
FLANGED BUTTERFLY VALVE
GLOBE VALVE
HYDRAULICALLY OPERATED VALVE
MOTOR OPERATED VALVE
MOTORIZED BUTTERFLY VALVE
FLANGED STRAINER (SINGLE BASKET)
STRAINER
CARTRIDGE FILTER VESSEL
FLANGED CONNECTION
CONNECTION BLANKED
SAMPLE PORT
FLEXIBLE COUPLING
UNION
FLEXIBLE HOSE
COUPLING
DUCT TRANSITION
REDUCER (CONCENTRIC)
BACKFLOW PREVENTER
AIR RELEASE VALVE
PRESSURE RELIEF VALVE
VACUUM SAFETY VALVE
AUTOMATIC CONTROL VALVE
PLUG VALVE
FLANGED PLUG VALVE
PRESSURE REGULATING VALVE
DRAIN
LEVEL SWITCH

IN–LINE INSTRUMENT
INSTRUMENT CONNECTED TO PROCESS LINE
PORTABLE INSTRUMENT NOT CONNECTED
INSTRUMENT FIELD MOUNTED
INSTRUMENT MAIN CONTROL PANEL
LOCAL CONTROL PANEL
HAND SWITCH 1–0–1 = (ON/OFF/AUTO)/3 POSITION
PUSH BUTTON 0–1 = (OFF/ON)/2 POSITION
INDICATOR LIGHT
ALARM COMMUNICATION FUNCTION
SHARED CONTROL/ALARM INTERLOCK–
AP: PRIMARY ALARM
AS: SECONDARY ALARM
AL: PRIMARY ALARM W/ LOCALIZED RESPONSE
AD: ADVISORY
PROGRAMMABLE LOGIC CONTROL–
PID: PROPORTIONAL, DERIVATIVE, INTEGRAL CONTROLLER
PLC: PROGRAMMABLE LOGIC CONTROLLER
CONTROL/ALARM INTERLOCK–
1: SECONDARY ALARM INPUT TO RELAY (PLC, AND AUTODIALER)
2: PLC INPUT
3: PLC OUTPUT
4: PLC OUTPUT (CRITICAL ALARM SHUTDOWN)
5: ALARMS GENERATED FROM PLC THEN TO AUTO DIALER INPUT
6: ALARM TO AUTODIALER
PUMP
BLOWER – CENTRIFUGAL (WITH VIV)
CARTRIDGE FILTER
MAGENETIC FLOW METER
PIPE DESIGNATION CHANGE:
PVC – POLYVINYL CHLORIDE
DI – DUCTILE IRON
CI – CAST IRON
CS – CARBON STEEL
SS – STAINLESS STEEL
AL – ALUMINUM

GENERAL NOTES:

1. COORDINATE WORK WITH OTHER DRAWINGS AND DISCIPLINES.
2. THE SYMBOLS SHOWN ON THIS SHEET ARE STANDARD DESIGNATIONS. NOT ALL SYMBOLS ARE APPLICABLE TO THE INCLUDED DIAGRAMS AND INSTRUMENT TAG NUMBERING SYSTEM.
3. NOT ALL PIPING, FITTINGS, AND TANK DETAILS ARE SHOWN. REFER TO PROCESS DRAWINGS FOR ACTUAL DETAILS.

THE SIGNATURE AND SEAL OF THE UNDERSIGNED ON THIS DRAWING CERTIFIES THAT THE DESIGN INFORMATION CONTAINED IN THESE DRAWINGS ACCURATELY REFLECTS THE ORIGINAL DESIGN AND THE MATERIAL DESIGN CHANGES MADE DURING CONSTRUCTION, THAT WERE BROUGHT TO THE UNDERSIGNED'S ATTENTION. THESE DRAWINGS ARE INTENDED TO INCORPORATE ADDENDA, CHANGE ORDERS AND OTHER MATERIAL DESIGN CHANGES, BUT NOT NECESSARILY ALL SITE INSTRUCTIONS. THE UNDERSIGNED DOES NOT WARRANT OR GUARANTEE, NOR ACCEPT ANY RESPONSIBILITY FOR THE ACCURACY OR COMPLETENESS OF THE CONSTRUCTION RECORD INFORMATION SUPPLIED BY OTHERS CONTAINED IN THESE DRAWINGS, BUT DOES CERTIFY THAT THE CONSTRUCTION RECORD INFORMATION, IF ACCURATE AND COMPLETE, PROVIDES A SYSTEM WHICH SUBSTANTIALLY COMPLIES IN ALL MATERIAL RESPECTS WITH THE ORIGINAL DESIGN INTENT."

STATE OF NEW YORK
STUART C. PEARSON
LICENSED PROFESSIONAL ENGINEER
5/3/21

NO.	DATE	REVISIONS	BY	CHK
	9/03/21	RECORD DRAWINGS	SCP	REM

DRAWN: NJG | PROJECT NO: 3617197453
ENGINEER: SCP | SCALE: NOT APPLICABLE
CHECKED: REM | APPROVED: S. PEARSON
DATE: 10/04/19 | DATE: 10/04/19

amec
AMEC E & E PC
214-25 42nd Ave
Bayside, New York 11361

LOCKHEED MARTIN CORPORATION,
FORMER UNISYS FACILITY,
LAKE SUCCESS, NEW YORK
OPERABLE UNITS NO. 1 & 2
EXTRACTION / RECOVERY WELL ELECTRICAL UPGRADES

PROCESS
PROCESS AND INSTRUMENTATION DIAGRAM LEGEND, ABBREVIATIONS, AND GENERAL NOTES

D-600

C:\Users\roger.riquier\Wood PLC\Lockheed Martin Great Neck - 8.0_Drawings\Rev Electrical Upgrade Design\Sheets\D-600.dwg Wed, 01 Sep 2021 - 1:30pm roger.riquier

UNAUTHORIZED ALTERATION OR ADDITION TO THIS DOCUMENT IS A VIOLATION OF SECTION 7209 OF THE NEW YORK STATE EDUCATION LAW.

NOTES:

1. REFER TO RECOVERY WELL PANEL (EW-1 RW-1RD RW-1RS) WIRING DIAGRAM FOR PROPOSED UPGRADES IN THIS CONTRACT.
2. ALL ITEMS ADDED IN THIS CONTRACT ARE SHOWN BOLD FOR CLARITY PURPOSES.
3. REFER TO DIV 13 SPECIFICATIONS FOR HMI UPGRADES TO BE PERFORMED IN THIS CONTRACT.

AUTO DIALER

SHARED CONTROL (SCADA)

MAIN CONTROL PANEL (MCP 100)

CRITICAL ALARMS

FIELD

RW-3 REMOTE CONTROL PANEL (RW-3 RCP)

EW-1R REMOTE CONTROL PANEL (EW-1 RCP)

RW-1RD REMOTE CONTROL PANEL (RW-1RD RCP)

RW-1RS REMOTE CONTROL PANEL (RW-1RS RCP)

FIBER-OPTIC BUS

E-NET

P-520 VFD STARTER PANEL

LOCAL CONTROL PANEL

MOTOR STARTER

LIMITS OF MCC

PUMPING WELL VAULT

RW-3 SUBMERSIBLE WELL PUMP P-520 TYPE: SUBMERSIBLE TURBINE MAKE: GRUNDFOS MODEL: 4755400-4 MOTOR: FRANKLIN, 460V, 40HP

EW-1R SUBMERSIBLE WELL PUMP P-400 TYPE: SUBMERSIBLE TURBINE MAKE: GRUNDFOS MODEL: 47SS400-5B MOTOR: FRANKLIN, 460V, 40HP

WELL VAULT EW-1R

EXTENT OF EW-1 VAULT

RW-1RD SUBMERSIBLE WELL PUMP P-500 TYPE: SUBMERSIBLE TURBINE MAKE: GRUNDFOS MODEL: 1505150-6 MOTOR: FRANKLIN, 460V,15 HP

EXTENT OF PUMPING WELL VAULT

RW-1RS SUBMERSIBLE WELL PUMP P-510 TYPE: SUBMERSIBLE TURBINE MAKE: GRUNDFOS MODEL: 1505100-5 MOTOR: FRANKLIN, 460V, 10HP

EXTENT OF PUMPING WELL VAULT

EXTENT OF AIR RELEASE VALVE/CLEANOUT VAULT (STATION 5+50)

EXTENT OF AIR RELEASE VALVE/CLEANOUT VAULT (STATION 11+00)

1" PVC CONDUIT

TREATMENT BUILDING

SEE SHEET I-102

THE SIGNATURE AND SEAL OF THE UNDERSIGNED ON THIS DRAWING CERTIFIES THAT THE DESIGN INFORMATION CONTAINED IN THESE DRAWINGS ACCURATELY REFLECTS THE ORIGINAL DESIGN AND THE MATERIAL DESIGN CHANGES MADE DURING CONSTRUCTION, THAT WERE BROUGHT TO THE UNDERSIGNED'S ATTENTION. THESE DRAWINGS ARE INTENDED TO INCORPORATE ADDENDA, CHANGE ORDERS AND OTHER MATERIAL DESIGN CHANGES, BUT NOT NECESSARILY ALL SITE INSTRUCTIONS. THE UNDERSIGNED DOES NOT WARRANT OR GUARANTEE, NOR ACCEPT ANY RESPONSIBILITY FOR THE ACCURACY OR COMPLETENESS OF THE CONSTRUCTION RECORD INFORMATION SUPPLIED BY OTHERS CONTAINED IN THESE DRAWINGS, BUT DOES CERTIFY THAT THE CONSTRUCTION RECORD INFORMATION, IF ACCURATE AND COMPLETE, PROVIDES A SYSTEM WHICH SUBSTANTIALLY COMPLIES IN ALL MATERIAL RESPECTS WITH THE ORIGINAL DESIGN INTENT."

STUART C. PEARSON LICENSED PROFESSIONAL ENGINEER 26806 9/3/01

NO.	DATE	REVISIONS	BY	CHK
	9/03/21	RECORD DRAWINGS	SCP	REM

DRAWN: NJG	PROJECT NO: 3617197453
ENGINEER: SCP	SCALE: NOT APPLICABLE
CHECKED: REM	APPROVED: S. PEARSON
DATE: 4/30/20	DATE: 4/30/20

amec
AMEC E & E PC
214-25 42nd Ave
Bayside, New York 11361

LOCKHEED MARTIN CORPORATION,
FORMER UNISYS FACILITY,
LAKE SUCCESS, NEW YORK
OPERABLE UNITS NO. 1 & 2
EXTRACTION / RECOVERY WELL ELECTRICAL UPGRADES

PROCESS

PROCESS AND INSTRUMENTATION DIAGRAM

D-601

C:\Users\roger.rquan\Wood_PLC\Lockheed Martin Great Neck – 8.0_Drawings\Rev Electrical Upgrade Design\Sheets\D-601.dwg Wed, 01 Sep 2021 – 1:32pm roger.rquan

UNAUTHORIZED ALTERATION OR ADDITION TO THIS DOCUMENT IS A VIOLATION OF SECTION 7209 OF THE NEW YORK STATE EDUCATION LAW.

NOTES:

1. SEE SHEET D-001 FOR LEGEND, ABBREVIATIONS, AND GENERAL NOTES.
2. ALL ITEMS ADDED IN THIS CONTRACT ARE SHOWN BOLD FOR CLARITY PURPOSES. ITEMS SHOWN IN GRAY ARE EXISTING.
3. REFER TO DIV.13 SPECIFICATIONS FOR HMI UPGRADES TO BE PERFORMED IN THIS CONTRACT.

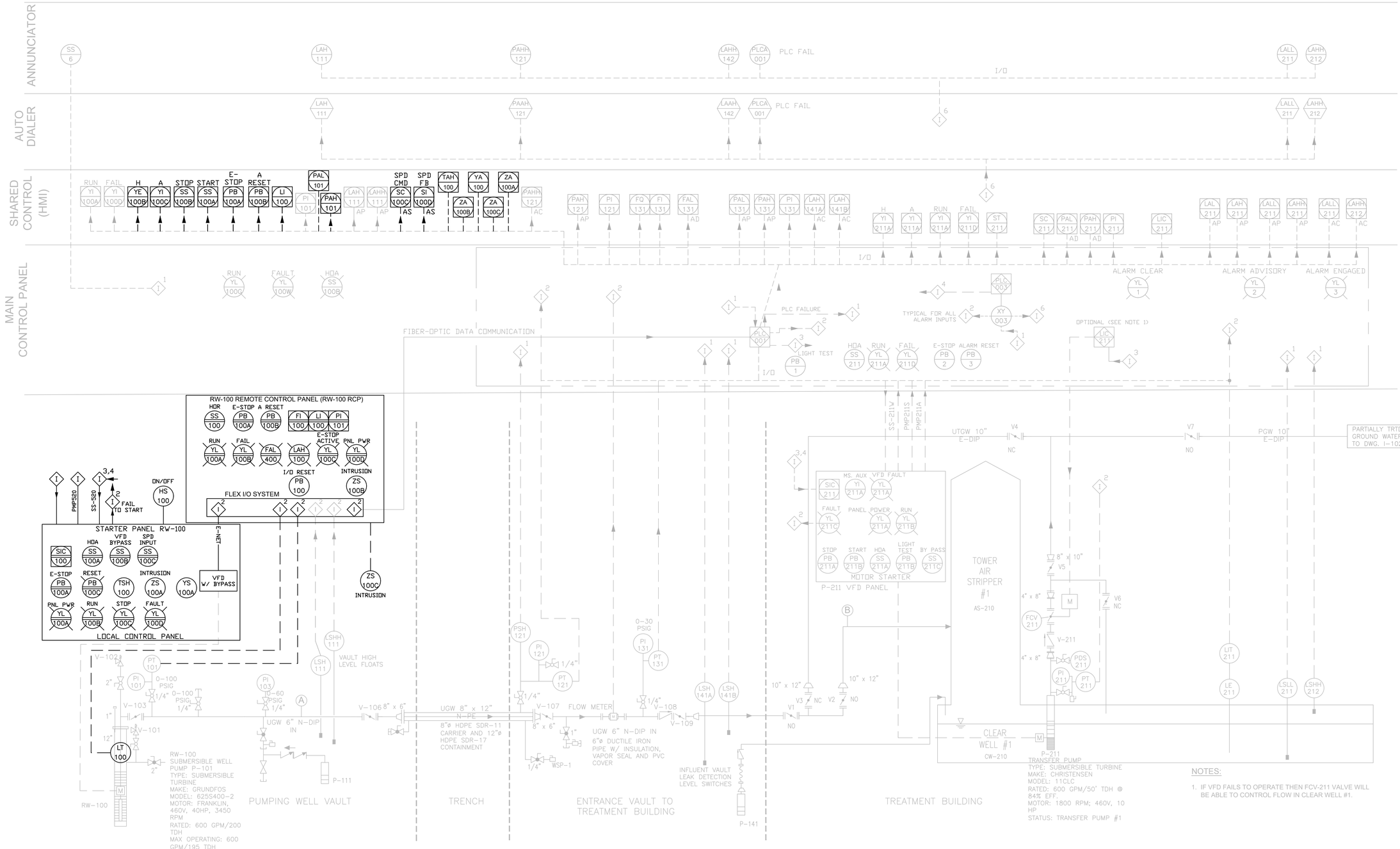

NOTES:

1. IF VFD FAILS TO OPERATE THEN FCV-211 VALVE WILL BE ABLE TO CONTROL FLOW IN CLEAR WELL #1.

THE SIGNATURE AND SEAL OF THE UNDERSIGNED ON THIS DRAWING CERTIFIES THAT THE DESIGN INFORMATION CONTAINED IN THESE DRAWINGS ACCURATELY REFLECTS THE ORIGINAL DESIGN AND THE MATERIAL DESIGN CHANGES MADE DURING CONSTRUCTION, THAT WERE BROUGHT TO THE UNDERSIGNED'S ATTENTION. THESE DRAWINGS ARE INTENDED TO INCORPORATE ADDENDA, CHANGE ORDERS AND OTHER MATERIAL DESIGN CHANGES, BUT NOT NECESSARILY ALL SITE INSTRUCTIONS. THE UNDERSIGNED DOES NOT WARRANT OR GUARANTEE, NOR ACCEPT ANY RESPONSIBILITY FOR THE ACCURACY OR COMPLETENESS OF THE CONSTRUCTION RECORD INFORMATION SUPPLIED BY OTHERS CONTAINED IN THESE DRAWINGS, BUT DOES CERTIFY THAT THE CONSTRUCTION RECORD INFORMATION, IF ACCURATE AND COMPLETE, PROVIDES A SYSTEM WHICH SUBSTANTIALLY COMPLIES IN ALL MATERIAL RESPECTS WITH THE ORIGINAL DESIGN INTENT."

STATE OF NEW YORK
STUART C. PEARSON
LICENSED PROFESSIONAL ENGINEER
098866
9/3/21

NO.	DATE	REVISIONS	BY	CHK
	9/03/21	RECORD DRAWINGS	SCP	REM

DRAWN: NJG
ENGINEER: SCP
CHECKED: REM
DATE: 10/04/19
PROJECT NO: 3617197453
SCALE: NOT APPLICABLE
APPROVED: S. PEARSON
DATE: 10/04/19

amec
AMEC E & E PC
214-25 42nd Ave
Bayside, New York 11361

LOCKHEED MARTIN CORPORATION,
FORMER UNISYS FACILITY,
LAKE SUCCESS, NEW YORK
OPERABLE UNITS NO. 1 & 2
EXTRACTION / RECOVERY WELL ELECTRICAL UPGRADES

PROCESS

OU2
PROCESS AND INSTRUMENTATION DIAGRAM
TREATMENT BUILDING WATER SIDE

D-611

C:\Users\roger.riguler\Wood PLC\Lockheed Martin Great Neck - 8.0_Drawings\Rev. Electrical Upgrade Design\Sheets\D-611.dwg Wed, 01 Sep 2021 - 1:35pm roger.riguler

UNAUTHORIZED ALTERATION OR ADDITION TO THIS DOCUMENT IS A VIOLATION OF SECTION 7209 OF THE NEW YORK STATE EDUCATION LAW.

ABBREVIATIONS:

AWG	AMERICAN WIRE GAUGE
C–X	CONTROL CONDUIT
CKT	CIRCUIT
G	REMOTE CONTROL PANEL
GFCI	GROUND FAULT CIRCUIT INTERRUPTER
GWTS	GROUND WATER TREATMENT SYSTEM
HCP	HEATER CONTROL PANEL
I–X	INSTRUMENTATION CONDUIT
MCC	MOTOR CONTROL CENTER
M.C.P.	MOTOR CIRCUIT PROTECTOR(S)
MCP	MAIN CONTROL PANEL
OU1	OPERATING UNIT NUMBER 1
OU2	OPERATING UNIT NUMBER 2
P–X	POWER CONDUIT (480 OR 120/240)
PNL	PANEL
PVC	POLYVINYL CHLORIDE
RCP	REMOTE CONTROL PANEL
RGS	RIGID GALVANIZED STEEL
RW–X	RAW WATER X–INDICATES WELL DESIGNATION
S.N.	SERVICE NEUTRAL
SSDS	SUB–SLAD DEPRESSURIZATION SYSTEM
TM	THERMAL–MAGNETIC
WP	WEATHER PROOF

GENERAL LEGEND:

- CONDUIT RUN (EXPOSED)
- G — GROUND BUS OR WIRE, TYPE & SIZE AS SPECIFIED
- CONNECTION
- NO CONNECTION
- SEALTITE OR FLEXIBLE CONDUIT (AS DESCRIBED IN SPEC)
- SS — SURGE SUPPRESSOR
- WYE, 3 PHASE, GROUNDED
- GROUND CONNECTION
- GROUND ROD
- 02 — MOTOR STARTER, F.V.N.R. TYPE (NEMA SIZE 2)
- FUSE, AMPERE RATING AS SHOWN
- J — UNIT, PROCESS OR SPACE HEATER (AS DESC. IN SPEC. (LAYOUT DRAWING))
- UNIT OR SPACE HEATER (SINGLE LINE DRAWING)
- 0.5 — INDUCTION MOTOR, THREE PHASE, # DENOTES H.P.
- J — HVAC DEVICE, SEE SCHEDULE
- LIGHTNING ARRESTOR(S)
- UTILITY RECEPTICAL
- EMERGENCY LIGHTS
- LA: — LIGHTNING ARRESTOR
- DISCONNECT (SWITCH) "DSC"
- ANTENNA, TELEMETRY SYSTEM
- REDUCED VOLTAGE STARTER AUTOTRANSFORMER TYPE
- DISCONNECT (MECHANICAL)
- UNIT OR SPACE HEATER (AS DESC. IN SPEC. (LAYOUT DRAWING))
- 1.0 — INDUCTION MOTOR, SINGLE PHASE, # DENOTES H.P.
- T — THERMOSTAT
- LIGHTING FIXTURE (SODIUM VAPOR/METAL HALIDE)
- LIGHTING FIXTURE (FLOURESCENT)
- A–3 — DUPLEX RECEPTACLE (B–2 DENOTES PANEL "A" CIRCUIT #)
- CURRENT TRANSFORMER
- POWER TRANSFORMER
- JB–_ — JUNCTION BOX
- WHM — WATTHOUR METER
- DEMOLITION

GENERAL NOTES:

1. ALL CONDUITS ENTERING OR LEAVING AN ELECTRICAL PANEL OR DEVICE SHALL BE SEALED WITH NON–HARDENING ELECTRICIAN PUTTY COMPATIBLE WITH CABLE INSULATION TO PREVENT MOISTURE INTRUSION.
2. DO NOT PLACE CUT–OUT OR "WINDOWS" IN CONCRETE PADS OR ELECTRICAL PANELS. USE HOLES SIZED AND LOCATED FOR CONDUITS USED.
3. ANALOG SIGNAL CABLES MAY BE COMBINED IN COMMON CONDUITS. MAINTAIN 12" SEPARATION TO POWER CONDUITS.
4. DISCRETE SIGNALS MAY BE COMBINED IN COMMON CONDUITS. MAINTAIN 12" SEPARATION TO POWER CONDUITS.
5. DO NOT COMBINE DISCRETE AND ANALOG.

NEW YORK STATE OF NEW YORK JITENDRA M. PATEL 075451 LICENSED PROFESSIONAL ENGINEER
9/1/21

jitu.patel Digitally signed by jitu.patel DN: CN=jitu.patel Date: 2021.09.01 17:15:15-04'00'

THE SIGNATURE AND SEAL OF THE UNDERSIGNED ON THIS DRAWING CERTIFIES THAT THE DESIGN INFORMATION CONTAINED IN THESE DRAWINGS ACCURATELY REFLECTS THE ORIGINAL DESIGN AND THE MATERIAL DESIGN CHANGES MADE DURING CONSTRUCTION, THAT WERE BROUGHT TO THE UNDERSIGNED'S ATTENTION. THESE DRAWINGS ARE INTENDED TO INCORPORATE ADDENDA, CHANGE ORDERS AND OTHER MATERIAL DESIGN CHANGES, BUT NOT NECESSARILY ALL SITE INSTRUCTIONS. THE UNDERSIGNED DOES NOT WARRANT OR GUARANTEE, NOR ACCEPT ANY RESPONSIBILITY FOR THE ACCURACY OR COMPLETENESS OF THE CONSTRUCTION RECORD INFORMATION SUPPLIED BY OTHERS CONTAINED IN THESE DRAWINGS, BUT DOES CERTIFY THAT THE CONSTRUCTION RECORD INFORMATION, IF ACCURATE AND COMPLETE, PROVIDES A SYSTEM WHICH SUBSTANTIALLY COMPLIES IN ALL MATERIAL RESPECTS WITH THE ORIGINAL DESIGN INTENT."

NO.	DATE	REVISIONS	BY	CHK
	9/03/21	RECORD DRAWINGS	SCP	REM

DRAWN: NJG	PROJECT NO: 3617197453
ENGINEER: REM	SCALE: NOT APPLICABLE
CHECKED: SCP	APPROVED: S. PEARSON
DATE: 10/04/19	DATE: 10/04/19

amec
AMEC E & E PC
214-25 42nd Ave
Bayside, New York 11361

LOCKHEED MARTIN CORPORATION,
FORMER UNISYS FACILITY,
LAKE SUCCESS, NEW YORK
OPERABLE UNITS NO. 1 & 2
EXTRACTION / RECOVERY WELL ELECTRICAL UPGRADES

ELECTRICAL

ELECTRICAL LEGEND,
ABBREVIATIONS, AND GENERAL NOTES

E-001

C:\Users\roger.rigler\Wood PLC\Lockheed Martin Great Neck - 8.0_Drawings\Rev. Electrical Upgrade Design\Sheets\E-001.dwg Wed, 01 Sep 2021 - 1:30pm roger.rigler

UNAUTHORIZED ALTERATION OR ADDITION TO THIS DOCUMENT IS A VIOLATION OF SECTION 7209 OF THE NEW YORK STATE EDUCATION LAW.



A E-101 OVERALL SITE PLAN
SCALE: NTS

NOTE:

1. SEE SHEET E-001 FOR LEGEND, ABBREVIATIONS, AND GENERAL NOTES.



9/1/21

jitu.patel Digitally signed by jitu.patel DN: CN=jitu.patel Date: 2021.09.01 17:15:50-04'00'

THE SIGNATURE AND SEAL OF THE UNDERSIGNED ON THIS DRAWING CERTIFIES THAT THE DESIGN INFORMATION CONTAINED IN THESE DRAWINGS ACCURATELY REFLECTS THE ORIGINAL DESIGN AND THE MATERIAL DESIGN CHANGES MADE DURING CONSTRUCTION, THAT WERE BROUGHT TO THE UNDERSIGNED'S ATTENTION. THESE DRAWINGS ARE INTENDED TO INCORPORATE ADDENDA, CHANGE ORDERS AND OTHER MATERIAL DESIGN CHANGES, BUT NOT NECESSARILY ALL SITE INSTRUCTIONS. THE UNDERSIGNED DOES NOT WARRANT OR GUARANTEE, NOR ACCEPT ANY RESPONSIBILITY FOR THE ACCURACY OR COMPLETENESS OF THE CONSTRUCTION RECORD INFORMATION SUPPLIED BY OTHERS CONTAINED IN THESE DRAWINGS, BUT DOES CERTIFY THAT THE CONSTRUCTION RECORD INFORMATION, IF ACCURATE AND COMPLETE, PROVIDES A SYSTEM WHICH SUBSTANTIALLY COMPLIES IN ALL MATERIAL RESPECTS WITH THE ORIGINAL DESIGN INTENT."

NO.	DATE	REVISIONS	BY	CHK
	9/03/21	RECORD DRAWINGS	SCP	REM

DRAWN: NJG	PROJECT NO: 3617197453
ENGINEER: REM	SCALE: AS NOTED
CHECKED: SCP	APPROVED: S. PEARSON
DATE: 10/04/19	DATE: 10/04/19

amec
AMEC E & E PC
214-25 42nd Ave
Bayside, New York 11361

LOCKHEED MARTIN CORPORATION,
FORMER UNISYS FACILITY,
LAKE SUCCESS, NEW YORK
OPERABLE UNITS NO. 1 & 2
EXTRACTION / RECOVERY WELL ELECTRICAL UPGRADES

ELECTRICAL

OVERALL SITE PLAN

ES-100

D:\Users\roger.rajuan\Wood, PLC\Lockheed Martin Great Neck - 8.0_Drawings\Rev Electrical Upgrade Design\Sheets\ES-100.dwg Wed, 01 Sep 2021 - 1:32pm roger.rajuan

UNAUTHORIZED ALTERATION OR ADDITION TO THIS DOCUMENT IS A VIOLATION OF SECTION 7209 OF THE NEW YORK STATE EDUCATION LAW

C:\Users\roger.rigler\Wood PLC\Lockheed Martin Great Neck - 8.0_Drawings\Rev Electrical Upgrade Design\Sheets\ES-111.dwg Wed, 01 Sep 2021 - 1:32pm roger.rigler

PLAN VIEW

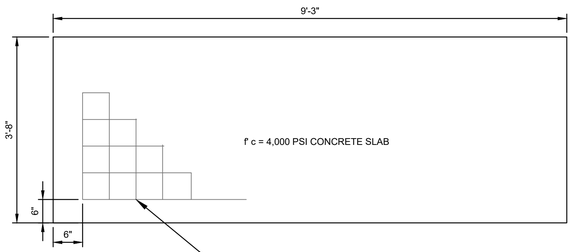

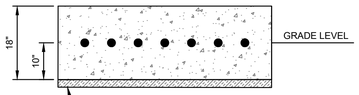

SIDE ELEVATION VIEW

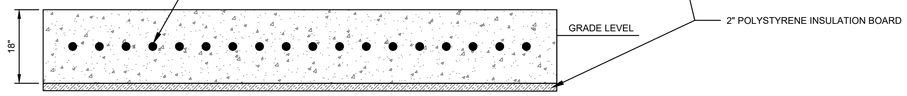

FRONT ELEVATION VIEW

C / ES-111 CONCRETE SLAB ON GRADE
NOT TO SCALE

NOTE:

1. SEE SHEET E-001 FOR LEGEND, ABBREVIATIONS, AND GENERAL NOTES.
2. SEE SHEET E-501 FOR DESIGN & GOVERNING BUILDING CODE, AND ADDITIONAL CONSTRUCTION AND MATERIAL REQUIREMENTS.
3. (VIF) = VERIFY IN FIELD
4. (E) = EXISTING

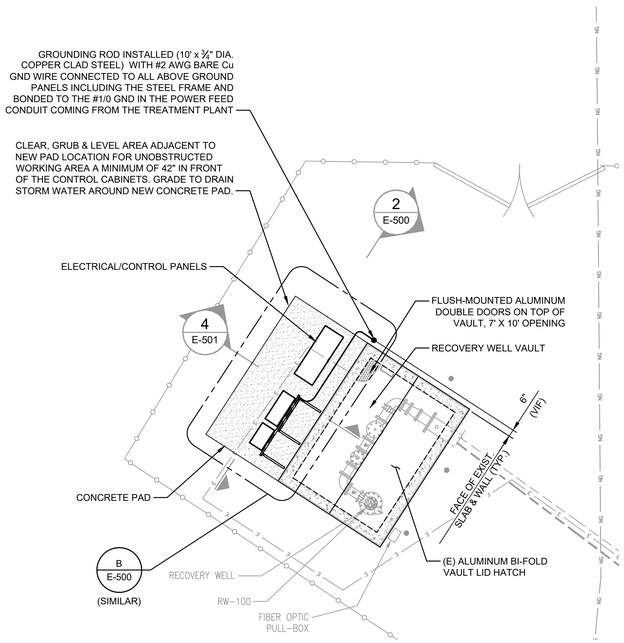

A / ES-111 PARTIAL SITE PLAN AT WELL VAULT RW-100
SCALE: 1"=5'-0"

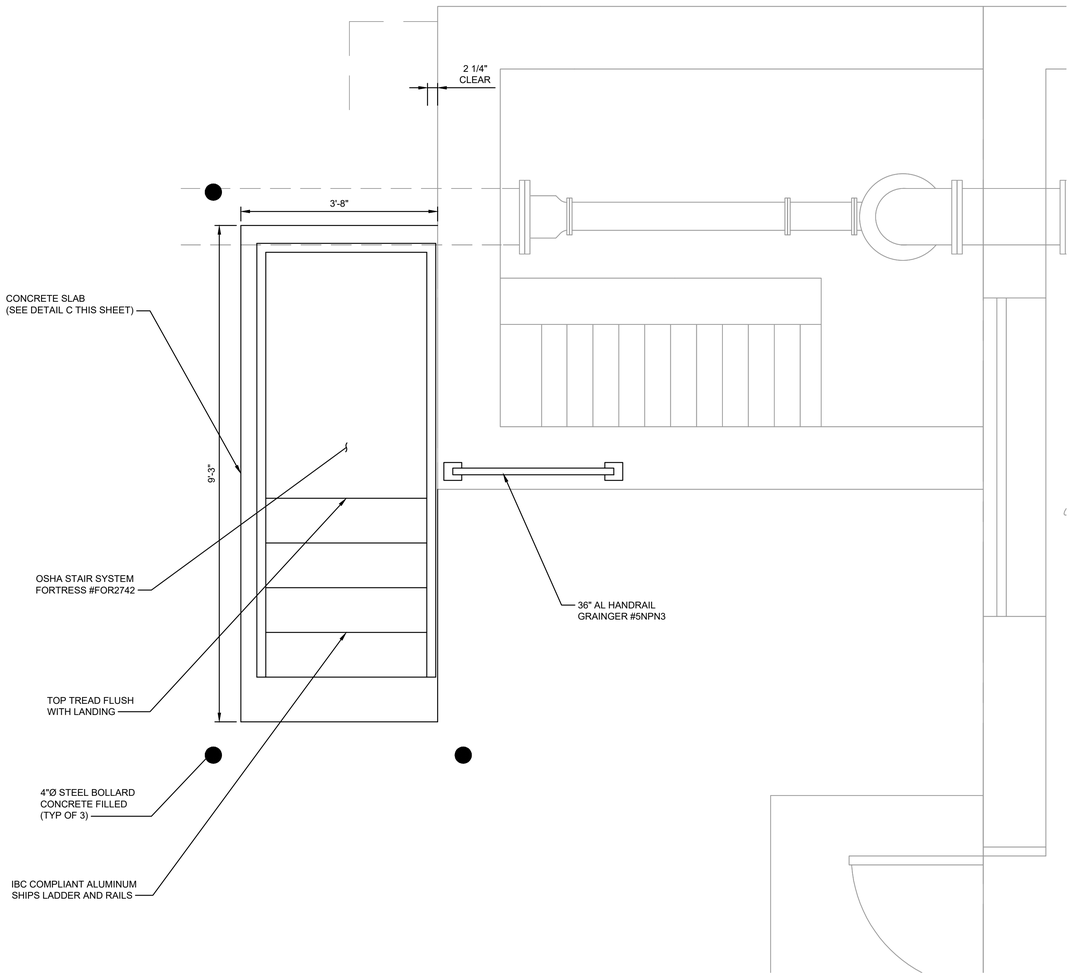

B / ES-111 PARTIAL SITE PLAN AT OU2 GWTS INFLUENT VAULT
SCALE: 3/4" = 1'-0"

0 2'-6" 5' 10'
SCALE: 1" = 5'-0"

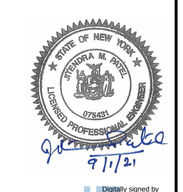

THE SIGNATURE AND SEAL OF THE UNDERSIGNED ON THIS DRAWING CERTIFIES THAT THE DESIGN INFORMATION CONTAINED IN THESE DRAWINGS ACCURATELY REFLECTS THE ORIGINAL DESIGN AND THE MATERIAL DESIGN CHANGES MADE DURING CONSTRUCTION, THAT WERE BROUGHT TO THE UNDERSIGNED'S ATTENTION. THESE DRAWINGS ARE INTENDED TO INCORPORATE ADDENDA, CHANGE ORDERS AND OTHER MATERIAL DESIGN CHANGES, BUT NOT NECESSARILY ALL SITE INSTRUCTIONS. THE UNDERSIGNED DOES NOT WARRANT OR GUARANTEE, NOR ACCEPT ANY RESPONSIBILITY FOR THE ACCURACY OR COMPLETENESS OF THE CONSTRUCTION RECORD INFORMATION SUPPLIED BY OTHERS CONTAINED IN THESE DRAWINGS, BUT DOES CERTIFY THAT THE CONSTRUCTION RECORD INFORMATION, IF ACCURATE AND COMPLETE, PROVIDES A SYSTEM WHICH SUBSTANTIALLY COMPLIES IN ALL MATERIAL RESPECTS WITH THE ORIGINAL DESIGN INTENT."

NO.	DATE	REVISIONS	BY	CHK
	9/03/21	RECORD DRAWINGS	SCP	REM

DRAWN: NJG	PROJECT NO: 3617197453
ENGINEER: REM	SCALE: AS NOTED
CHECKED: SCP	APPROVED: S. PEARSON
DATE: 10/04/19	DATE: 10/04/19

amec
AMEC E & E PC
214-25 42nd Ave
Bayside, New York 11361

LOCKHEED MARTIN CORPORATION,
FORMER UNISYS FACILITY,
LAKE SUCCESS, NEW YORK
OPERABLE UNITS NO. 1 & 2
EXTRACTION / RECOVERY WELL ELECTRICAL UPGRADES

ELECTRICAL

OU2
RW-100 AND GWTS SITE PLANS

ES-111

UNAUTHORIZED ALTERATION OR ADDITION TO THIS DOCUMENT IS A VIOLATION OF SECTION 7209 OF THE NEW YORK STATE EDUCATION LAW.

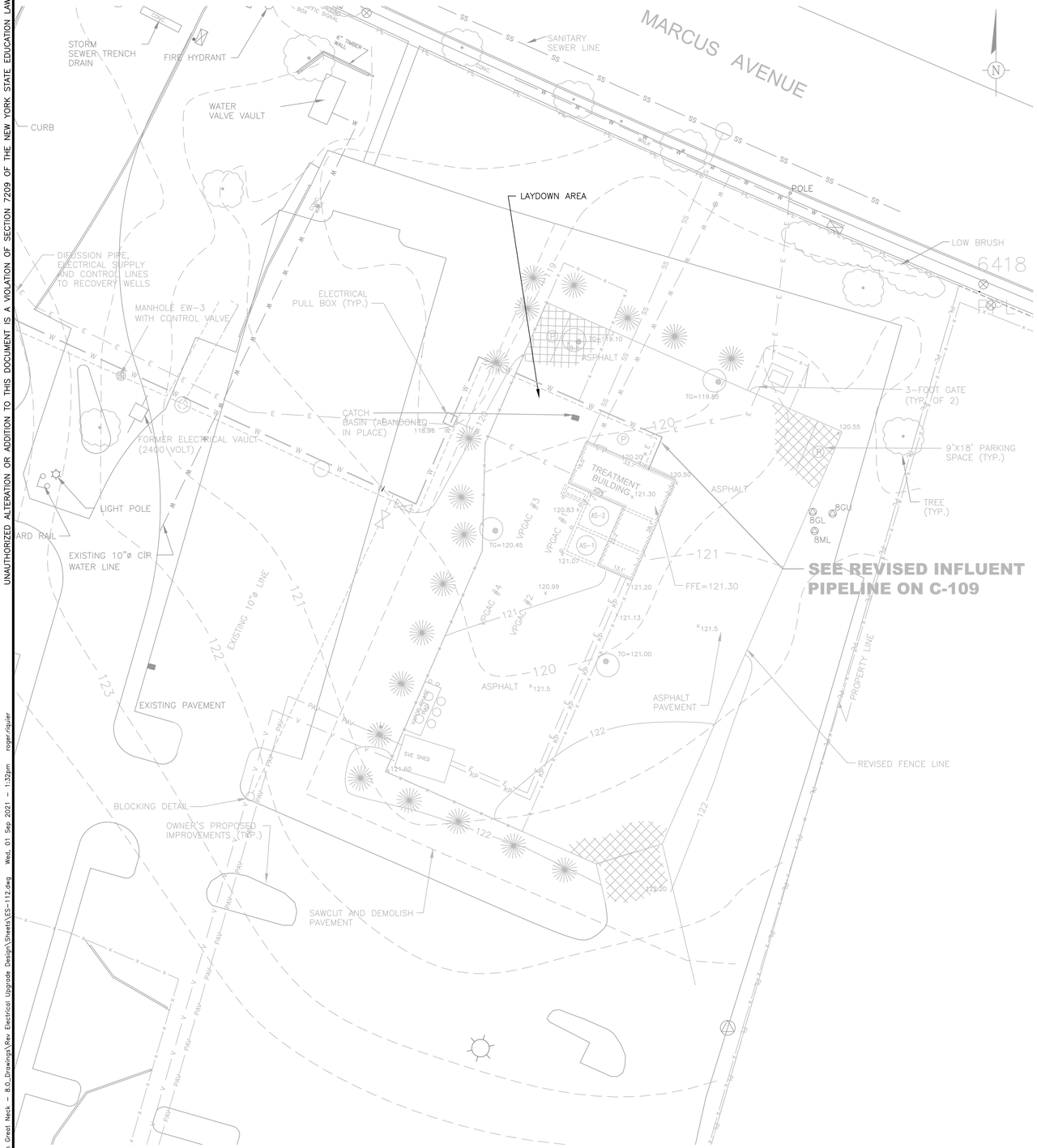

OU1 TREATMENT BUILDING STAGING AREA
SCALE: 1" = 20'

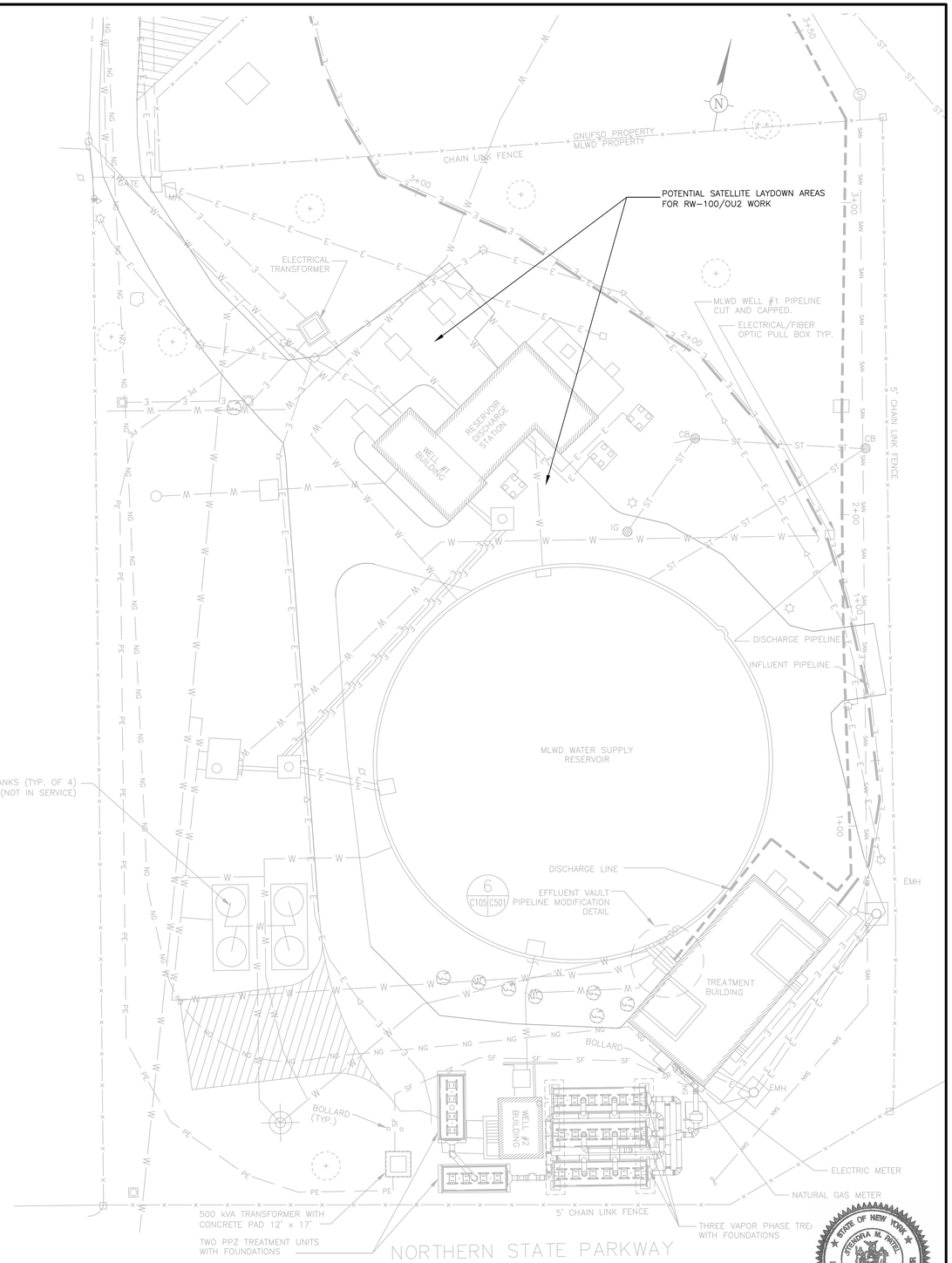

OU2 TREATMENT BUILDING STAGING AREA
SCALE: 1" = 20'

THE SIGNATURE AND SEAL OF THE UNDERSIGNED ON THIS DRAWING CERTIFIES THAT THE DESIGN INFORMATION CONTAINED IN THESE DRAWINGS ACCURATELY REFLECTS THE ORIGINAL DESIGN AND THE MATERIAL DESIGN CHANGES MADE DURING CONSTRUCTION, THAT WERE BROUGHT TO THE UNDERSIGNED'S ATTENTION. THESE DRAWINGS ARE INTENDED TO INCORPORATE ADDENDA, CHANGE ORDERS AND OTHER MATERIAL DESIGN CHANGES, BUT NOT NECESSARILY ALL SITE INSTRUCTIONS. THE UNDERSIGNED DOES NOT WARRANT OR GUARANTEE, NOR ACCEPT ANY RESPONSIBILITY FOR THE ACCURACY OR COMPLETENESS OF THE CONSTRUCTION RECORD INFORMATION SUPPLIED BY OTHERS CONTAINED IN THESE DRAWINGS, BUT DOES CERTIFY THAT THE CONSTRUCTION RECORD INFORMATION, IF ACCURATE AND COMPLETE, PROVIDES A SYSTEM WHICH SUBSTANTIALLY COMPLIES IN ALL MATERIAL RESPECTS WITH THE ORIGINAL DESIGN INTENT.*

STATE OF NEW YORK · JITENDRA M. PATEL · 075431 · LICENSED PROFESSIONAL ENGINEER

jitu.patel Digitally signed by jitu.patel DN: CN=jitu.patel Date: 2021.09.01 17:16:41-04'00'

9/1/21

NO.	DATE	REVISIONS	BY	CHK
	9/03/21	RECORD DRAWINGS	SCP	REM

DRAWN: AJF	PROJECT NO: 3617197453
ENGINEER: SCP	SCALE: AS NOTED
CHECKED: REM	APPROVED: S. PEARSON
DATE: 10/04/19	DATE: 10/04/19

amec
AMEC E & E PC
214-25 42nd Ave
Bayside, New York 11361

LOCKHEED MARTIN CORPORATION,
FORMER UNISYS FACILITY,
LAKE SUCCESS, NEW YORK
OPERABLE UNITS NO. 1 & 2
EXTRACTION / RECOVERY WELL ELECTRICAL UPGRADES

CIVIL

TREATMENT BUILDING STAGING AREA SITE PLANS

ES-112

G:\Users\roger.riquier\Wood PLC\Lockheed Martin Great Neck - B.O.Drawings\Rev Electrical Upgrade Design\Sheets\ES-112.dwg Wed, 01 Sep 2021 - 1:32pm roger.riquier

UNAUTHORIZED ALTERATION OR ADDITION TO THIS DOCUMENT IS A VIOLATION OF SECTION 7209 OF THE NEW YORK STATE EDUCATION LAW.

C:\Users\roger.rajan\Wood PLC\Lockheed Martin Great Neck - 8.0_Drawings\Rev Electrical Upgrade Design\Sheets\ED-101.dwg Wed, 01 Sep 2021 - 1:32pm roger.rajan

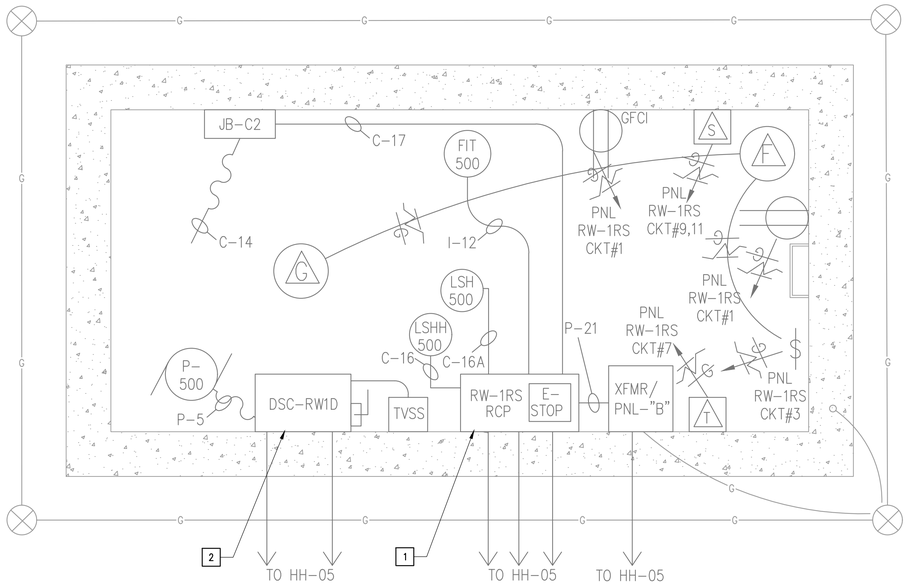

B ED-101 RW-1RS
SCALE: 3/4"=1'

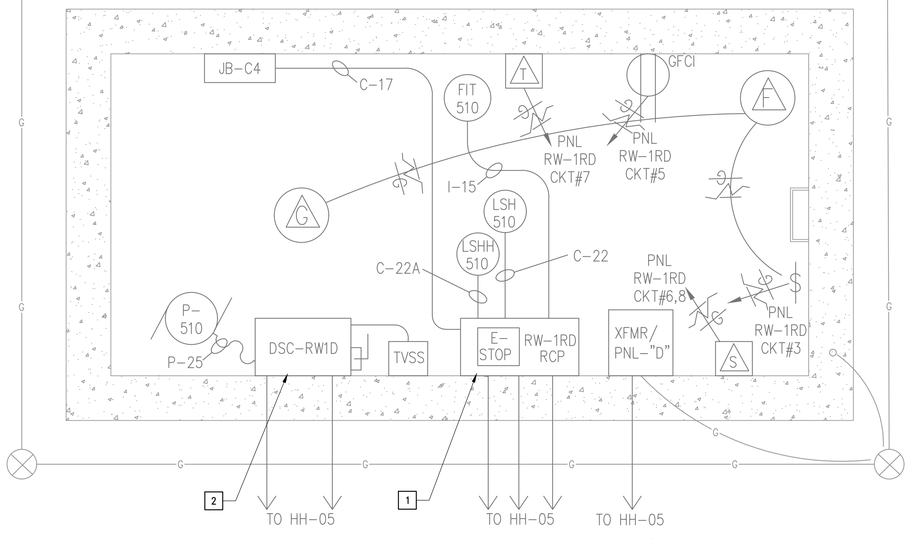

A ED-101 RW-1RD
SCALE: 3/4"=1'

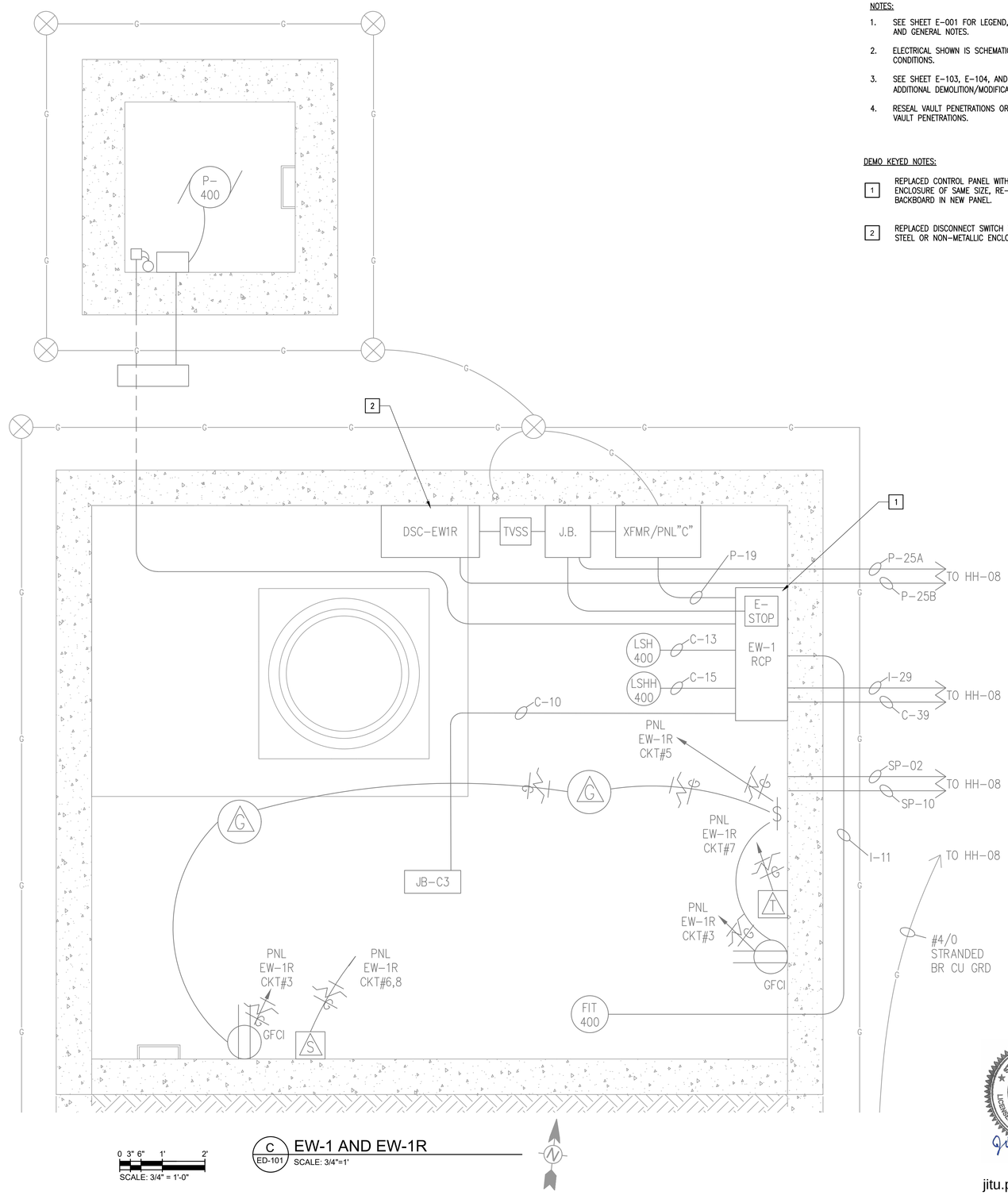

0 3" 6" 1' 2'
SCALE: 3/4" = 1'-0"

C ED-101 EW-1 AND EW-1R
SCALE: 3/4"=1'

NOTES:

1. SEE SHEET E-001 FOR LEGEND, ABBREVIATIONS, AND GENERAL NOTES.
2. ELECTRICAL SHOWN IS SCHEMATIC. VERIFY FIELD CONDITIONS.
3. SEE SHEET E-103, E-104, AND E-105 FOR ADDITIONAL DEMOLITION/MODIFICATION NOTES.
4. RESEAL VAULT PENETRATIONS OR PLUG UNUSED VAULT PENETRATIONS.

DEMO KEYED NOTES:

1 REPLACED CONTROL PANEL WITH NEW STAINLESS STEEL ENCLOSURE OF SAME SIZE, RE-INSTALL INTERIOR BACKBOARD IN NEW PANEL.

2 REPLACED DISCONNECT SWITCH WITH NEW STAINLESS STEEL OR NON-METALLIC ENCLOSURE OF SAME SIZE



THE SIGNATURE AND SEAL OF THE UNDERSIGNED ON THIS DRAWING CERTIFIES THAT THE DESIGN INFORMATION CONTAINED IN THESE DRAWINGS ACCURATELY REFLECTS THE ORIGINAL DESIGN AND THE MATERIAL DESIGN CHANGES MADE DURING CONSTRUCTION, THAT WERE BROUGHT TO THE UNDERSIGNED'S ATTENTION. THESE DRAWINGS ARE INTENDED TO INCORPORATE ADDENDA, CHANGE ORDERS AND OTHER MATERIAL DESIGN CHANGES, BUT NOT NECESSARILY ALL SITE INSTRUCTIONS. THE UNDERSIGNED DOES NOT WARRANT OR GUARANTEE, NOR ACCEPT ANY RESPONSIBILITY FOR THE ACCURACY OR COMPLETENESS OF THE CONSTRUCTION RECORD INFORMATION SUPPLIED BY OTHERS CONTAINED IN THESE DRAWINGS, BUT DOES CERTIFY THAT THE CONSTRUCTION RECORD INFORMATION, IF ACCURATE AND COMPLETE, PROVIDES A SYSTEM WHICH SUBSTANTIALLY COMPLIES IN ALL MATERIAL RESPECTS WITH THE ORIGINAL DESIGN INTENT."

NO.	DATE	REVISIONS	BY	CHK
	9/03/21	RECORD DRAWINGS	SCP	REM

DRAWN: NJG	PROJECT NO: 3617197453
ENGINEER: REM	SCALE: AS NOTED
CHECKED: SCP	APPROVED: S. PEARSON
DATE: 10/04/19	DATE: 10/04/19

amec
AMEC E & E PC
214-25 42nd Ave
Bayside, New York 11361

LOCKHEED MARTIN CORPORATION,
FORMER UNISYS FACILITY,
LAKE SUCCESS, NEW YORK
OPERABLE UNITS NO. 1 & 2
EXTRACTION / RECOVERY WELL ELECTRICAL UPGRADES

ELECTRICAL

OU1
DEMOLITION PLANS AND SECTIONS

ED-101

UNAUTHORIZED ALTERATION OR ADDITION TO THIS DOCUMENT IS A VIOLATION OF SECTION 7209 OF THE NEW YORK STATE EDUCATION LAW.

NOTES:

1. SEE SHEET E-001 FOR LEGEND, ABBREVIATIONS, AND GENERAL NOTES.
2. ELECTRICAL SHOWN IS SCHEMATIC. VERIFY FIELD CONDITIONS.
3. SEE SHEET E-113 FOR ADDITIONAL DEMOLITION/MODIFICATION NOTES.
4. RESEAL VAULT PENETRATIONS OR PLUG UNUSED VAULT PENETRATIONS.

DEMO KEYED NOTES:

1. REMOVED POWER PANEL
2. REMOVED CONTROL PANEL
3. REPLACED DISCONNECT SWITCH WITH NEW STAINLESS STEEL ENCLOSURE OF SAME SIZE

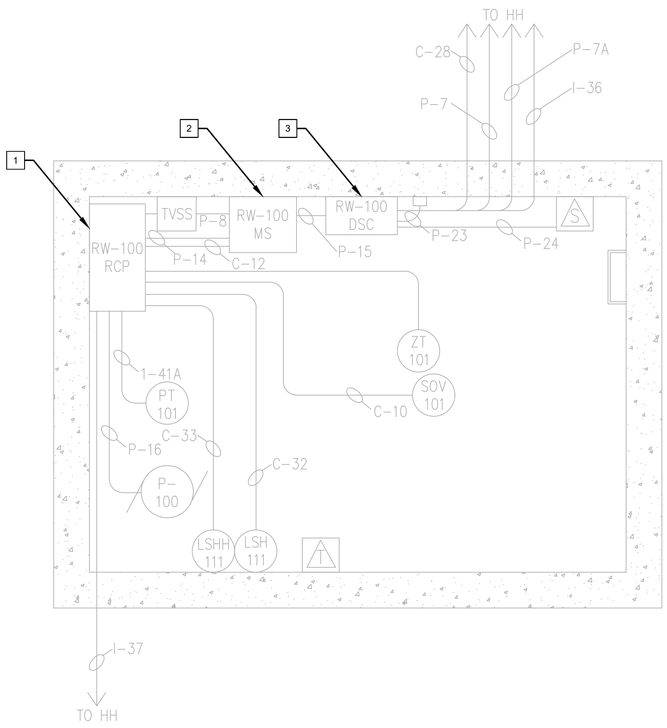

A DD-101 RW-100
SCALE: 1/2"=1'

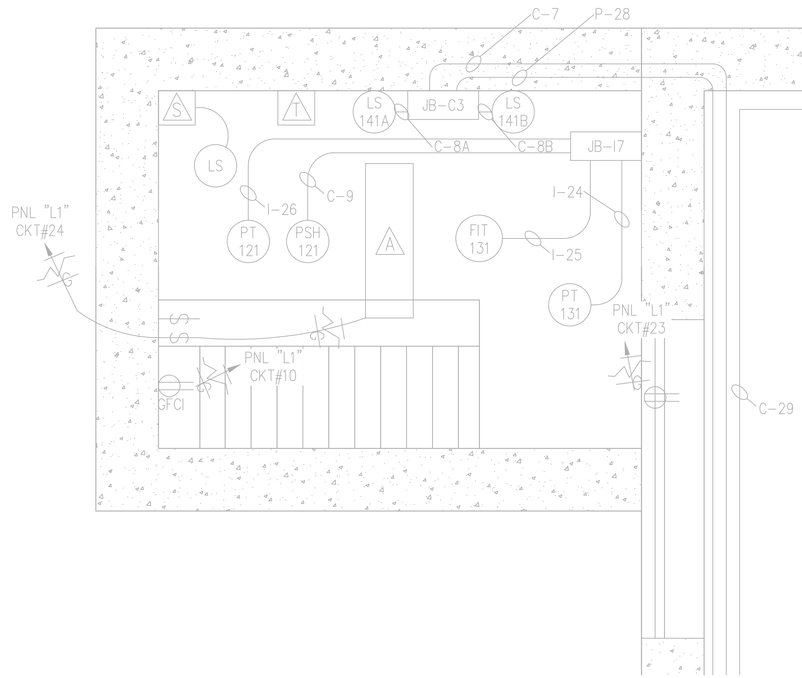

B DD-111 GWTS INFLUENT VAULT
SCALE: 1"=1'

0 3" 6" 1' 2'
SCALE: 3/4" = 1'-0"

JITENDRA M. PATEL — STATE OF NEW YORK — 078431 — LICENSED PROFESSIONAL ENGINEER
9/1/21

jitu.patel Digitally signed by jitu.patel DN: CN=jitu.patel Date: 2021.09.01 17:17:25-04'00'

THE SIGNATURE AND SEAL OF THE UNDERSIGNED ON THIS DRAWING CERTIFIES THAT THE DESIGN INFORMATION CONTAINED IN THESE DRAWINGS ACCURATELY REFLECTS THE ORIGINAL DESIGN AND THE MATERIAL DESIGN CHANGES MADE DURING CONSTRUCTION, THAT WERE BROUGHT TO THE UNDERSIGNED'S ATTENTION. THESE DRAWINGS ARE INTENDED TO INCORPORATE ADDENDA, CHANGE ORDERS AND OTHER MATERIAL DESIGN CHANGES, BUT NOT NECESSARILY ALL SITE INSTRUCTIONS. THE UNDERSIGNED DOES NOT WARRANT OR GUARANTEE, NOR ACCEPT ANY RESPONSIBILITY FOR THE ACCURACY OR COMPLETENESS OF THE CONSTRUCTION RECORD INFORMATION SUPPLIED BY OTHERS CONTAINED IN THESE DRAWINGS, BUT DOES CERTIFY THAT THE CONSTRUCTION RECORD INFORMATION, IF ACCURATE AND COMPLETE, PROVIDES A SYSTEM WHICH SUBSTANTIALLY COMPLIES IN ALL MATERIAL RESPECTS WITH THE ORIGINAL DESIGN INTENT."

NO.	DATE	REVISIONS	BY	CHK
	9/03/21	RECORD DRAWINGS	SCP	REM

DRAWN: NJG	PROJECT NO: 3617197453
ENGINEER: REM	SCALE: AS NOTED
CHECKED: SCP	APPROVED: S. PEARSON
DATE: 10/04/19	DATE: 10/04/19

amec
AMEC E & E PC
214-25 42nd Ave
Bayside, New York 11361

LOCKHEED MARTIN CORPORATION,
FORMER UNISYS FACILITY,
LAKE SUCCESS, NEW YORK
OPERABLE UNITS NO. 1 & 2
EXTRACTION / RECOVERY WELL ELECTRICAL UPGRADES

ELECTRICAL

OU2
DEMOLITION PLANS AND SECTIONS

ED-111

C:\Users\roger.rauer\Wood PLC\Lockheed Martin Great Neck - 8.0_Drawings\Rev Electrical Upgrade Design\Sheets\ED-111.dwg Wed, 01 Sep 2021 - 1:35pm roger.rauer

UNAUTHORIZED ALTERATION OR ADDITION TO THIS DOCUMENT IS A VIOLATION OF SECTION 7209 OF THE NEW YORK STATE EDUCATION LAW.

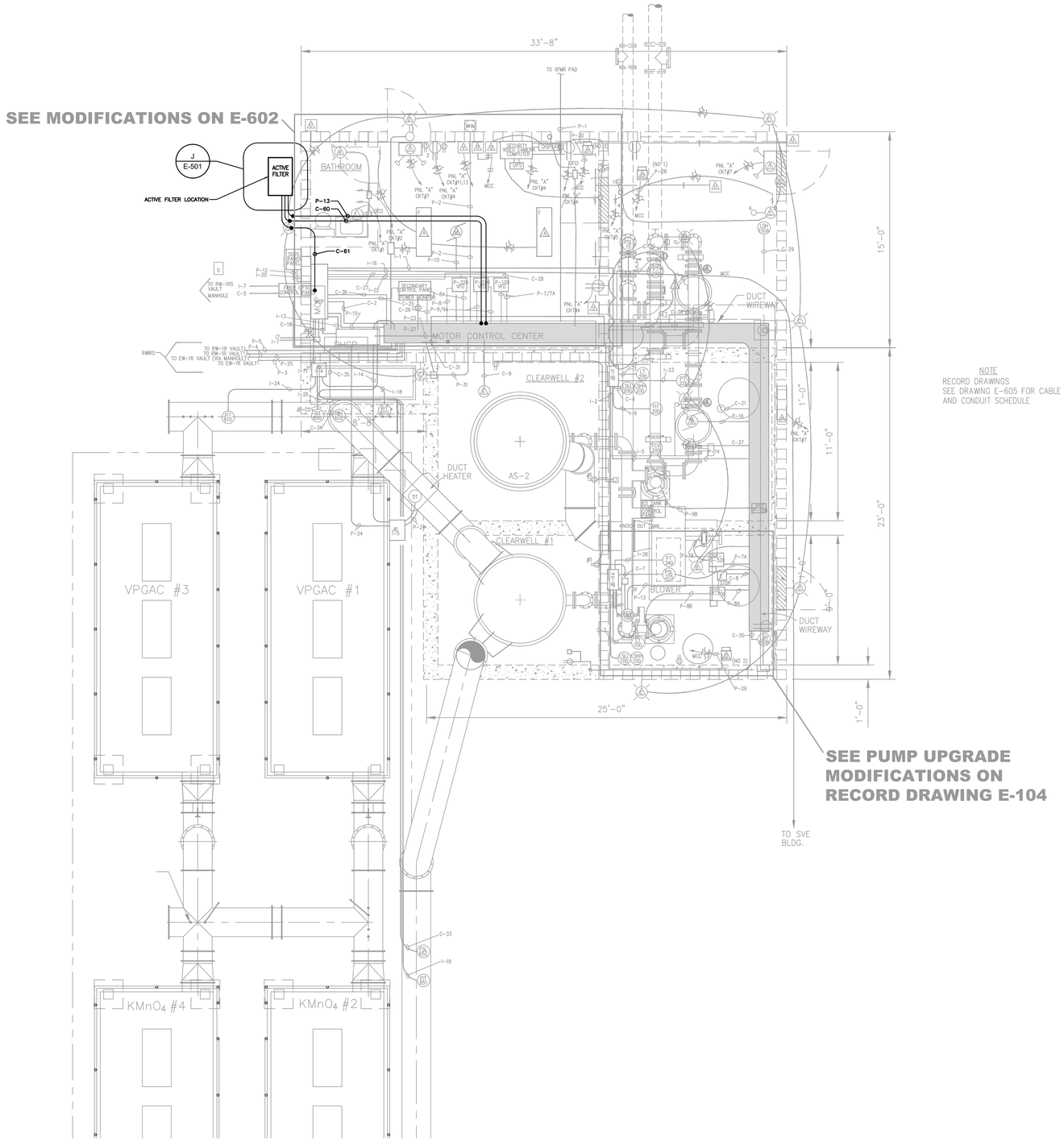

NOTE
RECORD DRAWINGS
SEE DRAWING E-605 FOR CABLE AND CONDUIT SCHEDULE

ELECTRICAL LAYOUT – TREATMENT BUILDING
(SCALE: 1/4"=1')

THE SIGNATURE AND SEAL OF THE UNDERSIGNED ON THIS DRAWING CERTIFIES THAT THE DESIGN INFORMATION CONTAINED IN THESE DRAWINGS ACCURATELY REFLECTS THE ORIGINAL DESIGN AND THE MATERIAL DESIGN CHANGES MADE DURING CONSTRUCTION, THAT WERE BROUGHT TO THE UNDERSIGNED'S ATTENTION. THESE DRAWINGS ARE INTENDED TO INCORPORATE ADDENDA, CHANGE ORDERS AND OTHER MATERIAL DESIGN CHANGES, BUT NOT NECESSARILY ALL SITE INSTRUCTIONS. THE UNDERSIGNED DOES NOT WARRANT OR GUARANTEE, NOR ACCEPT ANY RESPONSIBILITY FOR THE ACCURACY OR COMPLETENESS OF THE CONSTRUCTION RECORD INFORMATION SUPPLIED BY OTHERS CONTAINED IN THESE DRAWINGS, BUT DOES CERTIFY THAT THE CONSTRUCTION RECORD INFORMATION, IF ACCURATE AND COMPLETE, PROVIDES A SYSTEM WHICH SUBSTANTIALLY COMPLIES IN ALL MATERIAL RESPECTS WITH THE ORIGINAL DESIGN INTENT."

STATE OF NEW YORK
JITENDRA M. PATEL
LICENSED PROFESSIONAL ENGINEER
075431
9/1/21

jitu.patel Digitally signed by jitu.patel DN: CN=jitu.patel Date: 2021.09.01 17:17:45-04'00'

REF. DWG: GWTS 2012_E-33

NO.	DATE	REVISIONS	BY	CHK
	9/03/21	RECORD DRAWINGS	SCP	REM

DRAWN: RJR	PROJECT NO: 3617197453
ENGINEER: REM	SCALE: AS NOTED
CHECKED: SCP	APPROVED: S. PEARSON
DATE: 10/04/19	DATE: 10/04/19

amec
AMEC E & E PC
214-25 42nd Ave
Bayside, New York 11361

LOCKHEED MARTIN CORPORATION,
FORMER UNISYS FACILITY,
LAKE SUCCESS, NEW YORK
OPERABLE UNITS NO. 1 & 2
EXTRACTION / RECOVERY WELL ELECTRICAL UPGRADES

ELECTRICAL

OU1 TREATMENT BUILDING ELECTRICAL LAYOUT

E-102

C:\Users\roger.rajuter\Wood PLC\Lockheed Martin Great Neck - 8.0_Drawings\Rev Electrical Upgrade Design\Sheets\E-102.dwg Wed, 01 Sep 2021 – 1:33pm roger.rajuter

UNAUTHORIZED ALTERATION OR ADDITION TO THIS DOCUMENT IS A VIOLATION OF SECTION 7209 OF THE NEW YORK STATE EDUCATION LAW.





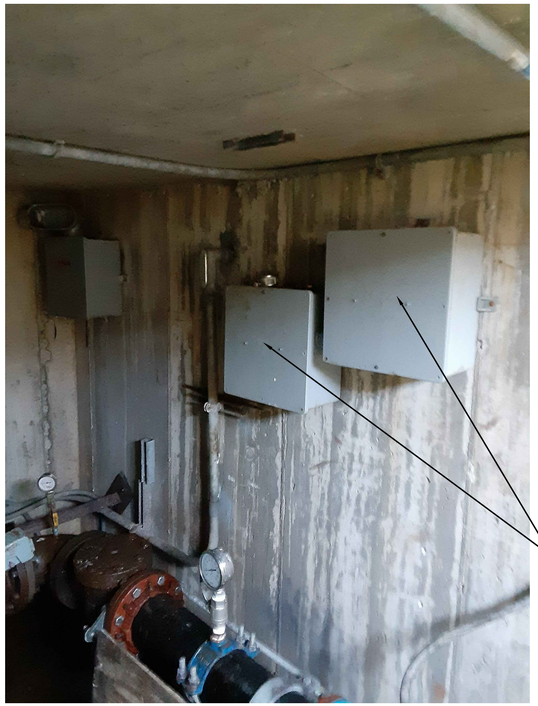

KEYED NOTES (PROPOSED WORK):

1. DISCONNECT AND REMOVE FIBER OPTIC CABLE AND PATCH PANEL/CASSETTE FROM RCP. DISCONNECT AND PULL BACK WIRES AND CABLES TO CONDUIT LB'S WHERE CONDUITS COME THRU VAULT WALL. REMOVE RCP AND REPLACE WITH 36"H x 30"W x 12"D STAINLESS STEEL ENCLOSED (RCP). RE-CONNECT CONDUITS COMING THRU VAULT WALL TO RCP USING PVC SCH 40 CONDUITS. SEE EI-621 & EI-622.

2. INSTALL WIRING COMING INTO RCP THRU THE VAULT WALL CONDUITS ON TERMINAL STRIPS INTO RCP. INSTALL FIBER OPTIC PATCH PANEL/CASSETTE IN RCP.

3. REPLACE LIGHT SWITCH AND RECEPTACLE ENCLOSURES WITH NONMETALLIC ENCLOSURES. REPLACE EXISTING LIGHTS WITH LARSON ELECTRIC HALP-24-2L-LED-NL, 7" X 24" LED LIGHT FIXTURE. REPLACE UNISTRUT SUPPORTS WITH EPOXY COATED OR NONMETALLIC UNISTRUT WITH STAINLESS STEEL FASTENERS. INSTALL NEW PVC SCH 40 CONDUITS AND WIRING FROM PANELBOARD TO LIGHT SWITCHES, LIGHTS, RECEPTACLES, SUMP PUMP, VAULT HEATER, AND INSTRUMENTS. USE LIQUIDTIGHT FLEXIBLE NONMETALLIC (LFNC) CONDUIT WHERE FLEXIBILTY REQUIRED.

4. RE-USE EXISTING SURGE SUPPRESSORS ENCLOSURE, MOTOR CURRENT MONITOR, AND JUNCTION BOX FOR MOTOR CABLES GOING TO WELL MOTOR. RE-USE EXISTING STAINLESS STEEL MOTOR DISCONNECT SWITCH. INSTALL NEW PVC SCH 40 CONDUIT FROM DISCONNECT SWITCH BACK TO CONDUITS IN VAULT WALL. CHANGE FROM PVC CONDUIT TO PVC COATED RIGID GALVANIZED STEEL CONDUIT BEFORE LEAVING VAULT.

5. REMOVE EXISTING CONDUITS AND WIRES GOING TO VAULT INSTRUMENTS. INSTALL NEW PVC SCH 40 AND LFNC CONDUITS AND WIRING FROM INSTRUMENTS TO RCP. INSTALL NEW PVC COATED RIGID GALVANIZED STEEL CONDUIT FROM RCP TO CONDUITS IN VAULT WALL.

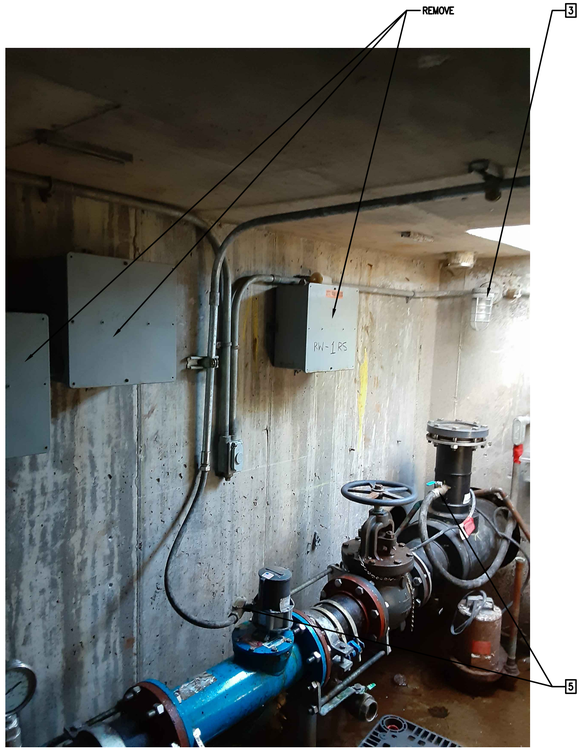



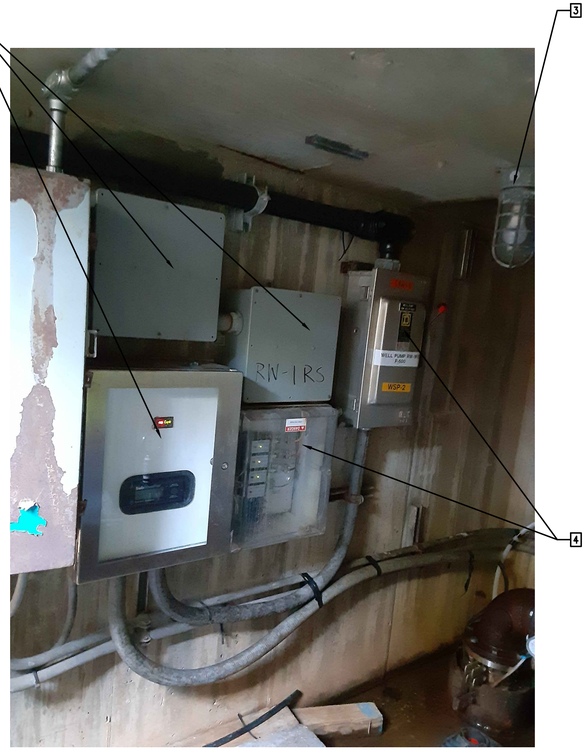



THE SIGNATURE AND SEAL OF THE UNDERSIGNED ON THIS DRAWING CERTIFIES THAT THE DESIGN INFORMATION CONTAINED IN THESE DRAWINGS ACCURATELY REFLECTS THE ORIGINAL DESIGN AND THE MATERIAL DESIGN CHANGES MADE DURING CONSTRUCTION, THAT WERE BROUGHT TO THE UNDERSIGNED'S ATTENTION. THESE DRAWINGS ARE INTENDED TO INCORPORATE ADDENDA, CHANGE ORDERS AND OTHER MATERIAL DESIGN CHANGES, BUT NOT NECESSARILY ALL SITE INSTRUCTIONS. THE UNDERSIGNED DOES NOT WARRANT OR GUARANTEE, NOR ACCEPT ANY RESPONSIBILITY FOR THE ACCURACY OR COMPLETENESS OF THE CONSTRUCTION RECORD INFORMATION SUPPLIED BY OTHERS CONTAINED IN THESE DRAWINGS, BUT DOES CERTIFY THAT THE CONSTRUCTION RECORD INFORMATION, IF ACCURATE AND COMPLETE, PROVIDES A SYSTEM WHICH SUBSTANTIALLY COMPLIES IN ALL MATERIAL RESPECTS WITH THE ORIGINAL DESIGN INTENT."

NO.	DATE	REVISIONS	BY	CHK
	9/03/21	RECORD DRAWINGS	SCP	REM

DRAWN: AJF	PROJECT NO: 3617197453
ENGINEER: REM	SCALE: AS NOTED
CHECKED: SCP	APPROVED: S. PEARSON
DATE: 10/04/19	DATE: 10/04/19

amec
AMEC E & E PC
214-25 42nd Ave
Bayside, New York 11361

LOCKHEED MARTIN CORPORATION,
FORMER UNISYS FACILITY,
LAKE SUCCESS, NEW YORK
OPERABLE UNITS NO. 1 & 2
EXTRACTION / RECOVERY WELL ELECTRICAL UPGRADES

ELECTRICAL

WELL RW-1RS VAULT
ELECTRICAL PLAN

E-103

C:\Users\roger.riquier\Wood PLC\Lockheed Martin Great Neck - 8.0_Drawings\Rev Electrical Upgrade Design\Sheets\E-103.dwg Wed, 01 Sep 2021 - 1:33pm roger.riquier

UNAUTHORIZED ALTERATION OR ADDITION TO THIS DOCUMENT IS A VIOLATION OF SECTION 7209 OF THE NEW YORK STATE EDUCATION LAW.

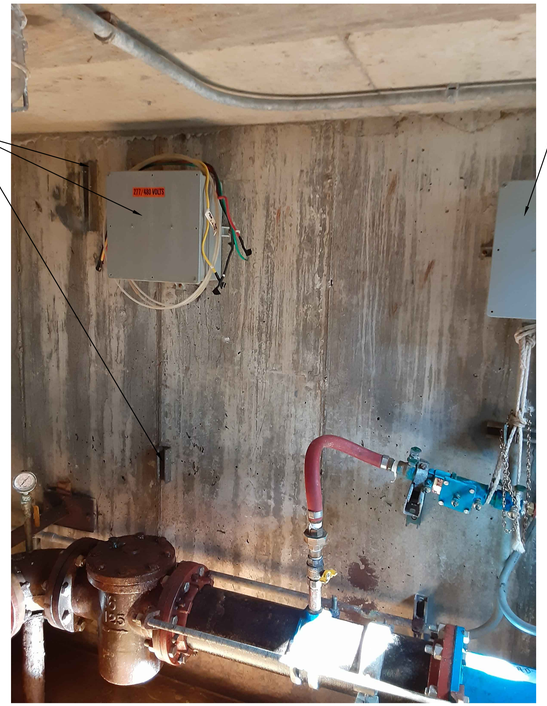





KEYED NOTES (PROPOSED WORK):

1. DISCONNECT AND REMOVE FIBER OPTIC CABLE AND PATCH PANEL/CASSETTE FROM RCP. DISCONNECT AND PULL BACK WIRES AND CABLES TO CONDUIT LB'S WHERE CONDUITS COME THRU VAULT WALL. REMOVE RCP AND REPLACE WITH 36"H X 30"W X 12"D STAINLESS STEEL DNCLOSURE (RCP). RE-CONNECT CONDUITS COMING THRU VAULT WALL TO RCP USING PVC SCH 40 CONDUITS. SEE EI-641 & EI-642.

2. INSTALL WIRING COMING INTO RCP THRU THE VAULT WALL CONDUITS ON TERMINAL STRIPS INTO RCP. INSTALL FIBER OPTIC PATCH PANEL/CASSETTE IN RCP.

3. REPLACE LIGHT SWITCH AND RECEPTACLE ENCLOSURES WITH NONMETALLIC ENCLOSURES. REPLACE EXISTING LIGHTS WITH LARSON ELECTRIC HALP-24-2L-LED-NL, 7"X 24" LED LIGHT FIXTURE. REPLACE UNISTRUT SUPPORTS WITH EPOXY COATED OR NONMETALLIC UNISTRUT WITH STAINLESS STEEL FASTENERS. INSTALL NEW PVC SCH 40 CONDUITS AND WIRING FROM PANELBOARD TO LIGHT SWITCHES, LIGHTS, RECEPTACLES, SUMP PUMP, VAULT HEATER, AND INSTRUMENTS. USE LIQUIDTIGHT FLEXIBLE NONMETALLIC (LFNC) CONDUIT WHERE FLEXIBILTY REQUIRED.

4. RE-USE EXISTING DISCONNECT SWITCH AND SURGE SUPPRESSORS ENCLOSURE FOR MOTOR CABLES GOING TO WELL MOTOR. INSTALL A NEW MOTOR DISCONNECT SWITCH IN A NONMETALLIC ENCLOSURE. INSTALL NEW PVC SCH 40 CONDUIT FROM DISCONNECT SWITCH BACK TO CONDUITS IN VAULT WALL. CHANGE FROM PVC CONDUIT TO PVC COATED RIGID GALVANIZED STEEL CONDUIT BEFORE LEAVING VAULT.

5. REMOVE EXISTING CONDUITS AND WIRES GOING TO VAULT INSTRUMENTS. INSTALL NEW PVC SCH 40 AND LFNC CONDUITS AND WIRING FROM INSTRUMENTS TO RCP. INSTALL NEW PVC COATED RIGID GALVANIZED STEEL CONDUIT FROM RCP TO CONDUITS IN VAULT WALL.









jitu.patel Digitally signed by jitu.patel DN: CN=jitu.patel Date: 2021.09.03 17:18:24-04'00'

THE SIGNATURE AND SEAL OF THE UNDERSIGNED ON THIS DRAWING CERTIFIES THAT THE DESIGN INFORMATION CONTAINED IN THESE DRAWINGS ACCURATELY REFLECTS THE ORIGINAL DESIGN AND THE MATERIAL DESIGN CHANGES MADE DURING CONSTRUCTION, THAT WERE BROUGHT TO THE UNDERSIGNED'S ATTENTION. THESE DRAWINGS ARE INTENDED TO INCORPORATE ADDENDA, CHANGE ORDERS AND OTHER MATERIAL DESIGN CHANGES, BUT NOT NECESSARILY ALL SITE INSTRUCTIONS. THE UNDERSIGNED DOES NOT WARRANT OR GUARANTEE, NOR ACCEPT ANY RESPONSIBILITY FOR THE ACCURACY OR COMPLETENESS OF THE CONSTRUCTION RECORD INFORMATION SUPPLIED BY OTHERS CONTAINED IN THESE DRAWINGS, BUT DOES CERTIFY THAT THE CONSTRUCTION RECORD INFORMATION, IF ACCURATE AND COMPLETE, PROVIDES A SYSTEM WHICH SUBSTANTIALLY COMPLIES IN ALL MATERIAL RESPECTS WITH THE ORIGINAL DESIGN INTENT."

NO.	DATE	REVISIONS	BY	CHK
	9/03/21	RECORD DRAWINGS	SCP	REM

DRAWN: AJF	PROJECT NO: 3617197453
ENGINEER: REM	SCALE: AS NOTED
CHECKED: SCP	APPROVED: S. PEARSON
DATE: 10/04/19	DATE: 10/04/19

amec
AMEC E & E PC
214-25 42nd Ave
Bayside, New York 11361

LOCKHEED MARTIN CORPORATION,
FORMER UNISYS FACILITY,
LAKE SUCCESS, NEW YORK
OPERABLE UNITS NO. 1 & 2
EXTRACTION / RECOVERY WELL ELECTRICAL UPGRADES

ELECTRICAL

WELL RW-1RD VAULT
ELECTRICAL PLAN

E-104

P:\Users\roger.rigler\Wood PLC\Lockheed Martin Great Neck - R.A. Drawings\Rev Electrical Upgrade Design\Sheets\E-104.dwg Wed, 01 Sep 2021 - 1:34pm roger.rigler

UNAUTHORIZED ALTERATION OR ADDITION TO THIS DOCUMENT IS A VIOLATION OF SECTION 7209 OF THE NEW YORK STATE EDUCATION LAW.

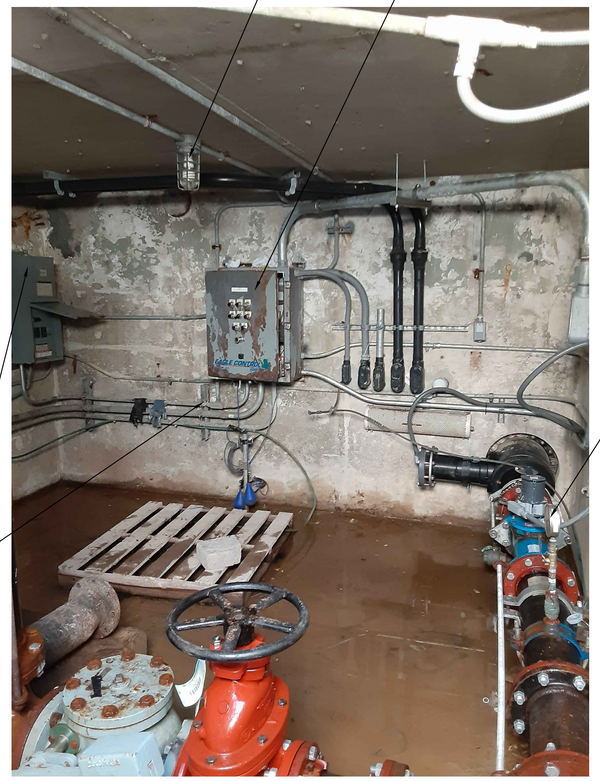



KEYED NOTES (PROPOSED WORK):

1. DISCONNECT AND REMOVE FIBER OPTIC CABLE AND PATCH PANEL/CASSETTE FROM RCP. DISCONNECT AND PULL BACK WIRES AND CABLES TO CONDUIT LB'S WHERE CONDUITS COME THRU VAULT WALL. REMOVE RCP AND REPLACE WITH 18"H X 16" W X 10"D NONMETALLIC ENCLOSURE (JB-RCP). RE-CONNECT CONDUITS COMING THRU VAULT WALL TO JB-RCP USING PVC SCH 40 CONDUITS. SEE EI-661 & EI-662.

2. INSTALL WIRING COMING INTO JB-RCP THRU THE VAULT WALL CONDUITS ON TERMINAL STRIPS INTO JB-RCP. INSTALL FIBER OPTIC PATCH PANEL/CASSETTE IN JB-RCP.

3. REMOVE TRANSFORMER AND PANELBOARD. REMOVE ALL CONDUIT AND WIRING CONNECTED TO PANELBOARD. REPLACE LIGHT SWITCH AND RECEPTACLE ENCLOSURES WITH NONMETALLIC ENCLOSURES. REPLACE EXISTING LIGHTS WITH LARSON ELECTRIC HALP-24-2L-LED-NL, 7"X 24" LED LIGHT FIXTURE. REPLACE UNISTRUT SUPPORTS WITH EPOXY COATED OR NONMETALLIC UNISTRUT WITH STAINLESS STEEL FASTENERS. INSTALL NEW PVC SCH 40 CONDUITS AND WIRING FROM PANELBOARD OUTSIDE VAULT TO LIGHT SWITCHES, LIGHTS, RECEPTACLES, SUMP PUMP, VAULT HEATER, AND INSTRUMENTS. USE LIQUIDTIGHT FLEXIBLE NONMETALLIC (LFNC) CONDUIT WHERE FLEXIBILTY REQUIRED.

4. RE-USE EXISTING DISCONNECT SWITCH, SURGE SUPPRESSORS ENCLOSURE, AND JB FOR MOTOR CABLES GOING TO WELL MOTOR. INSTALL A NEW MOTOR DISCONNECT SWITCH IN A NONMETALLIC ENCLOSURE AT LOCATION WHERE MOTOR CABLES GO TO VAULT EW-1R. INSTALL NEW PVC SCH 40 CONDUIT FROM DISCONNECT SWITCH BACK TO CONDUITS IN VAULT WALL. CHANGE FROM PVC CONDUIT TO PVC COATED RIGID GALVANIZED STEEL CONDUIT BEFORE LEAVING VAULT. INSTALL A SEPARATE PVC CONDUIT FOR THE FLOAT SWITCHES WIRING FROM VAULT EW-1R BACK TO JB-RCP.

5. REMOVE EXISTING CONDUITS AND WIRES GOING TO VAULT INSTRUMENTS. INSTALL NEW PVC SCH 40 AND LFNC CONDUITS AND WIRING FROM INSTRUMENTS TO JB-RCP. INSTALL NEW PVC COATED RIGID GALVANIZED STEEL CONDUIT FROM JB-RCP TO CONDUITS IN VAULT WALL.



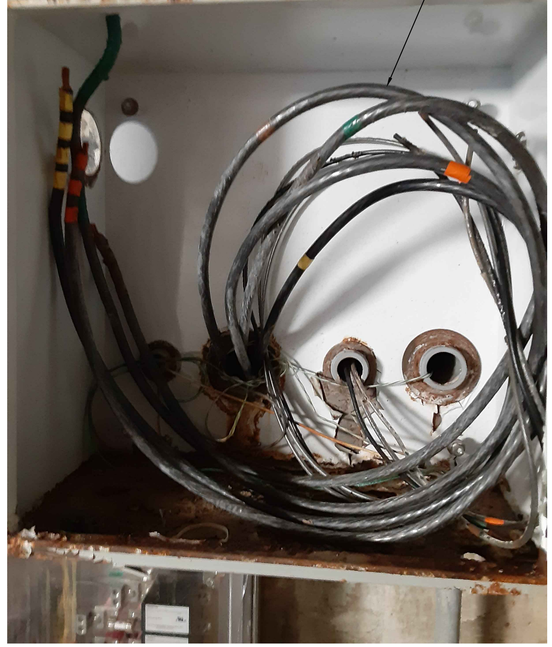

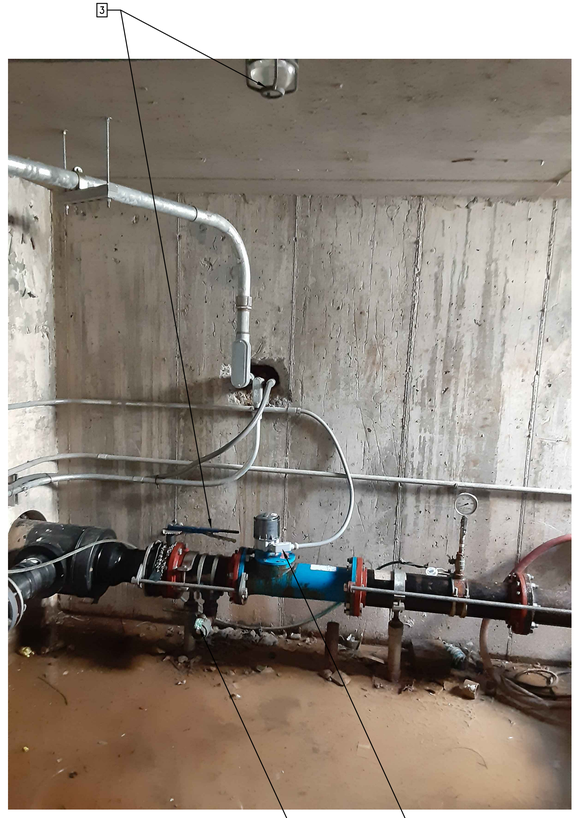

THE SIGNATURE AND SEAL OF THE UNDERSIGNED ON THIS DRAWING CERTIFIES THAT THE DESIGN INFORMATION CONTAINED IN THESE DRAWINGS ACCURATELY REFLECTS THE ORIGINAL DESIGN AND THE MATERIAL DESIGN CHANGES MADE DURING CONSTRUCTION, THAT WERE BROUGHT TO THE UNDERSIGNED'S ATTENTION. THESE DRAWINGS ARE INTENDED TO INCORPORATE ADDENDA, CHANGE ORDERS AND OTHER MATERIAL DESIGN CHANGES, BUT NOT NECESSARILY ALL SITE INSTRUCTIONS. THE UNDERSIGNED DOES NOT WARRANT OR GUARANTEE, NOR ACCEPT ANY RESPONSIBILITY FOR THE ACCURACY OR COMPLETENESS OF THE CONSTRUCTION RECORD INFORMATION SUPPLIED BY OTHERS CONTAINED IN THESE DRAWINGS, BUT DOES CERTIFY THAT THE CONSTRUCTION RECORD INFORMATION, IF ACCURATE AND COMPLETE, PROVIDES A SYSTEM WHICH SUBSTANTIALLY COMPLIES IN ALL MATERIAL RESPECTS WITH THE ORIGINAL DESIGN INTENT."

STATE OF NEW YORK
JITENDRA M. PATEL
075431
LICENSED PROFESSIONAL ENGINEER
9/1/21

jitu.patel Digitally signed by jitu.patel DN: CN=jitu.patel Date: 2021.09.01 17:18:43-04'00'

NO.	DATE	REVISIONS	BY	CHK
	9/03/21	RECORD DRAWINGS	SCP	REM

DRAWN: AJF	PROJECT NO: 3617197453
ENGINEER: REM	SCALE: AS NOTED
CHECKED: SCP	APPROVED: S. PEARSON
DATE: 10/04/19	DATE: 10/04/19

amec
AMEC E & E PC
214-25 42nd Ave
Bayside, New York 11361

LOCKHEED MARTIN CORPORATION,
FORMER UNISYS FACILITY,
LAKE SUCCESS, NEW YORK
OPERABLE UNITS NO. 1 & 2
EXTRACTION / RECOVERY WELL ELECTRICAL UPGRADES

ELECTRICAL

WELL EW-1 VAULT
ELECTRICAL PLAN

E-105

G:\Users\roger.rigler\Wood PLC\Lockheed Martin Great Neck - 8.0_Drawings\Rev_Electrical Upgrade Design\Sheets\E-105.dwg Wed, 01 Sep 2021 - 1:34pm roger.rigler

UNAUTHORIZED ALTERATION OR ADDITION TO THIS DOCUMENT IS A VIOLATION OF SECTION 7209 OF THE NEW YORK STATE EDUCATION LAW.

NOTES:

1. SEE SHEET E-001 FOR LEGEND, ABBREVIATIONS, AND GENERAL NOTES.
2. ELECTRICAL SHOWN IS SCHEMATIC. VERIFY FIELD CONDITIONS.
3. REWIRE ALL EXISTING ELECTRICAL DEVICES SUCH AS POWER DISCONNECT SWITCH, SUMP PUMP SWITCH, LIGHT RECEPTACLES, HEATERS, ETC. TO NEW PANEL BOARD LOCATED ON TOP OF VAULT.
4. REWIRE ALL EXISTING CONTROL DEVICES SUCH AS FLOAT SWITCHES, E-STOPS, ETC. TO NEW REMOTE CONTROL PANEL LOCATED ON TOP OF VAULT.
5. CONNECT NEW MAGMETER AND VAULT INTRUSION SWITCHES TO NEW REMOTE CONTROL PANEL LOCATED ON TOP OF VAULT.
6. CONNECT EXISTING WELL PUMP MOTOR DISCONNECT SWITCH TO NEW STARTER PANEL LOCATED ON TOP OF VAULT.
7. TIE NEW VAULT MOUNTED PANELS INTO EXISTING GROUND LOOP.

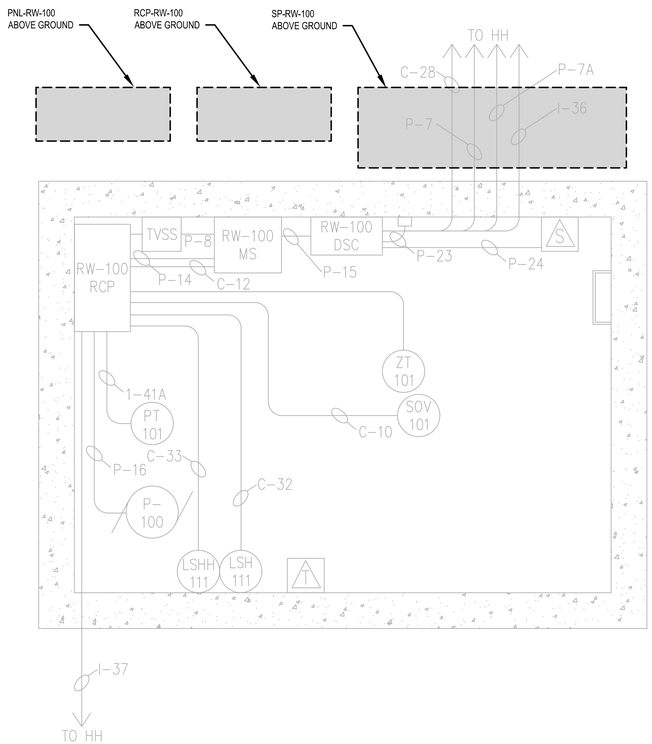

A E-111 RW-100
SCALE: 1/2"=1'

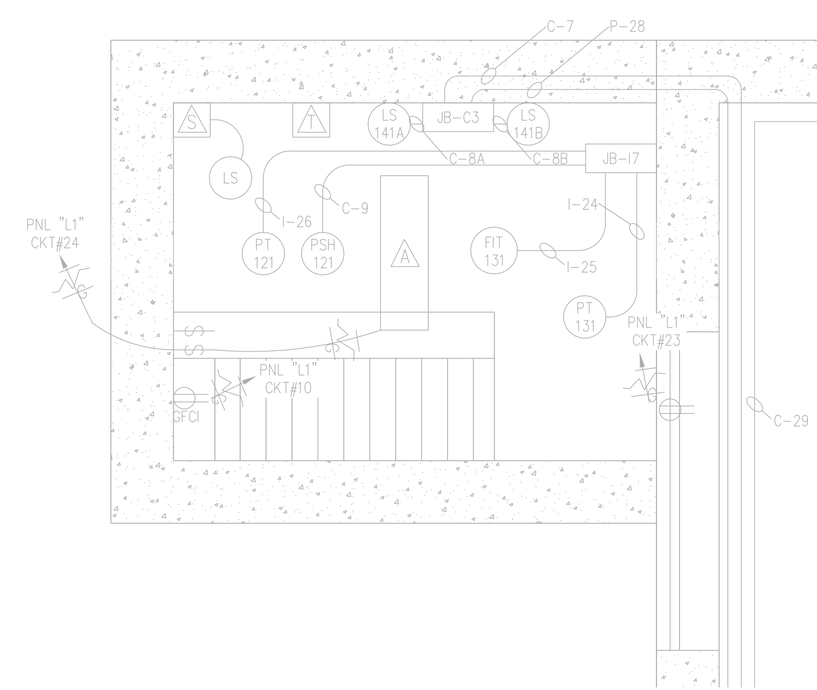

B E-111 GWTS INFLUENT VAULT
SCALE: 1"=1'



jitu.patel Digitally signed by jitu.patel DN: CN=jitu.patel Date: 2021.09.01 17:19:01-04'00'

THE SIGNATURE AND SEAL OF THE UNDERSIGNED ON THIS DRAWING CERTIFIES THAT THE DESIGN INFORMATION CONTAINED IN THESE DRAWINGS ACCURATELY REFLECTS THE ORIGINAL DESIGN AND THE MATERIAL DESIGN CHANGES MADE DURING CONSTRUCTION, THAT WERE BROUGHT TO THE UNDERSIGNED'S ATTENTION. THESE DRAWINGS ARE INTENDED TO INCORPORATE ADDENDA, CHANGE ORDERS AND OTHER MATERIAL DESIGN CHANGES, BUT NOT NECESSARILY ALL SITE INSTRUCTIONS. THE UNDERSIGNED DOES NOT WARRANT OR GUARANTEE, NOR ACCEPT ANY RESPONSIBILITY FOR THE ACCURACY OR COMPLETENESS OF THE CONSTRUCTION RECORD INFORMATION SUPPLIED BY OTHERS CONTAINED IN THESE DRAWINGS, BUT DOES CERTIFY THAT THE CONSTRUCTION RECORD INFORMATION, IF ACCURATE AND COMPLETE, PROVIDES A SYSTEM WHICH SUBSTANTIALLY COMPLIES IN ALL MATERIAL RESPECTS WITH THE ORIGINAL DESIGN INTENT."

NO.	DATE	REVISIONS	BY	CHK
	9/03/21	RECORD DRAWINGS	SCP	REM

DRAWN: NJG	PROJECT NO: 3617197453
ENGINEER: REM	SCALE: AS NOTED
CHECKED: SCP	APPROVED: S. PEARSON
DATE: 10/04/19	DATE: 10/04/19

amec
AMEC E & E PC
214-25 42nd Ave
Bayside, New York 11361

LOCKHEED MARTIN CORPORATION,
FORMER UNISYS FACILITY,
LAKE SUCCESS, NEW YORK
OPERABLE UNITS NO. 1 & 2
EXTRACTION / RECOVERY WELL ELECTRICAL UPGRADES

ELECTRICAL

OU2
PLANS AND SECTIONS

E-111

G:\Users\roger.rigler\Wood PLC\Lockheed Martin Great Neck - 8.0_Drawings\Rev Electrical Upgrade Design\Sheets\E-111.dwg Wed, 01 Sep 2021 - 1:34pm roger.rigler

UNAUTHORIZED ALTERATION OR ADDITION TO THIS DOCUMENT IS A VOLATION OF SECTION 7209 OF THE NEW YORK STATE EDUCATION LAW.

NOTES:

1. PLEASE SEE DRAWING E–615 FOR CONDUIT AND CONDUCTOR SCHEDULE FOR ITEMS DEPICTED ON THIS DRAWING.
2. PLEASE SEE DRAWING E–111 FOR RW–100 WELL VAULT DETAIL AND ELECTRICAL LAYOUT.
3. THE NEW ELECTRICAL CONDUIT, CONDUCTORS, CONTROLS AND INSTRUMENTATION ARE DELINEATED IN THIS DIAGRAM AND ARE SHOWN IN A DARK LINE WEIGHT. THE EXISTING ELECTRICAL CONDUIT, CONDUCTORS, CONTROLS AND INSTRUMENTATION ARE DELINEATED IN THIS DIAGRAM AND ARE SHOWN IN A LIGHTER/GRAYED BACK LINE WEIGHT. THE CONTRACTOR SHALL COMPLETE INSTALLATION OF THE NEW ITEMS AND THE REMOVAL AND/OR MODIFICATIONS OF EXISTING MATERIALS AS DELINEATED OR REQUIRED.
4. CONDUIT RUN TROUGH ATTIC
5. OUTPUT CABLES FROM THE FIBER OPTIC PATCH WERE NOT RUN IN CONDUIT TO THE MCP
6. THE INFLUENT VAULT HAS TWO LIGHTS.
7. LOCATE NEW ACTIVE FILTER OUTSIDE MCC ROOM.

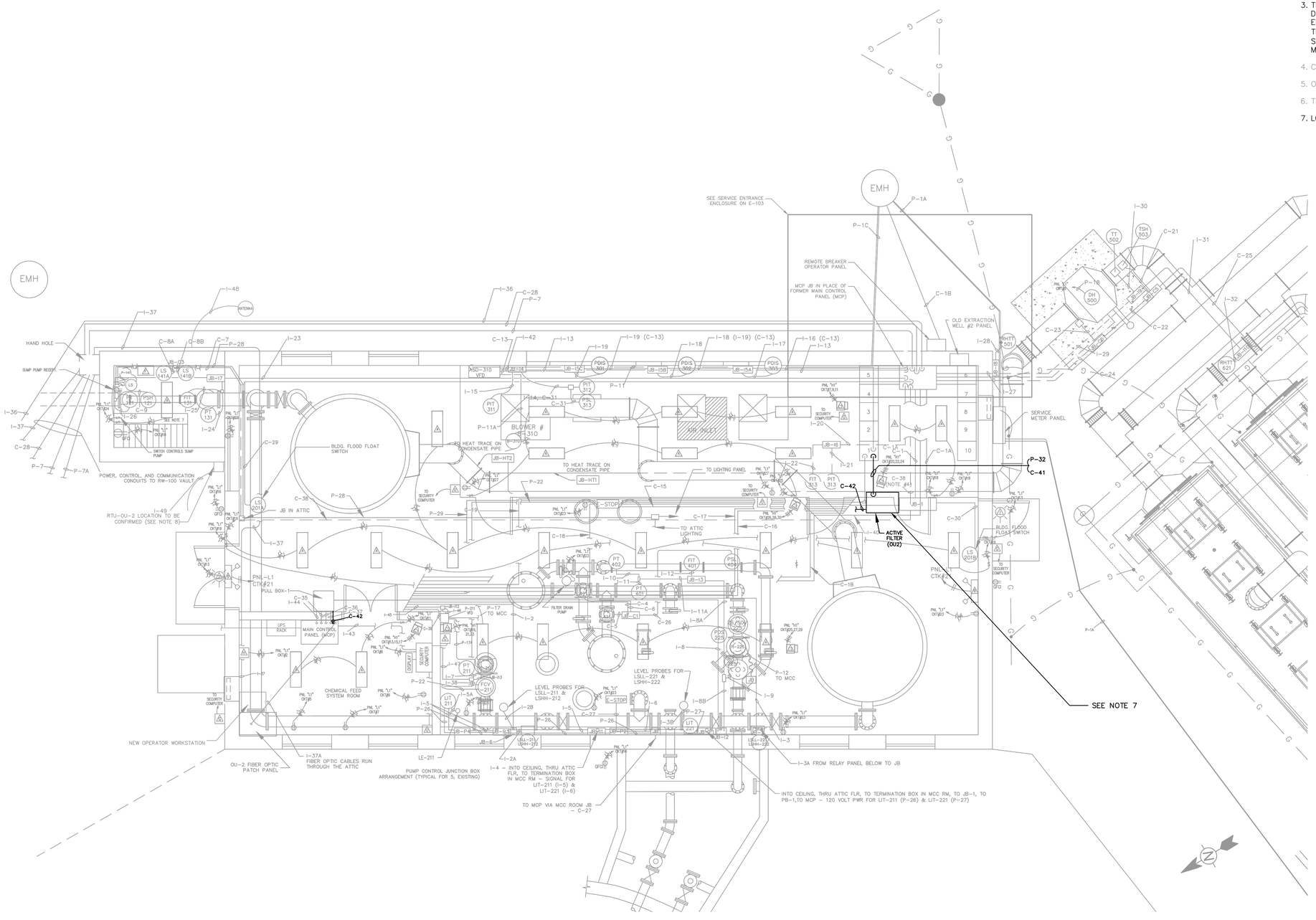

STATE OF NEW YORK
JITENDRA M. PATEL
LICENSED PROFESSIONAL ENGINEER
075431
9/1/21
Digitally signed by jitu.patel
DN: CN=jitu.patel
Date: 2021.09.01 17:19:21-04'00'
jitu.patel

THE SIGNATURE AND SEAL OF THE UNDERSIGNED ON THIS DRAWING CERTIFIES THAT THE DESIGN INFORMATION CONTAINED IN THESE DRAWINGS ACCURATELY REFLECTS THE ORIGINAL DESIGN AND THE MATERIAL DESIGN CHANGES MADE DURING CONSTRUCTION, THAT WERE BROUGHT TO THE UNDERSIGNED'S ATTENTION. THESE DRAWINGS ARE INTENDED TO INCORPORATE ADDENDA, CHANGE ORDERS AND OTHER MATERIAL DESIGN CHANGES, BUT NOT NECESSARILY ALL SITE INSTRUCTIONS. THE UNDERSIGNED DOES NOT WARRANT OR GUARANTEE, NOR ACCEPT ANY RESPONSIBILITY FOR THE ACCURACY OR COMPLETENESS OF THE CONSTRUCTION RECORD INFORMATION SUPPLIED BY OTHERS CONTAINED IN THESE DRAWINGS, BUT DOES CERTIFY THAT THE CONSTRUCTION RECORD INFORMATION, IF ACCURATE AND COMPLETE, PROVIDES A SYSTEM WHICH SUBSTANTIALLY COMPLIES IN ALL MATERIAL RESPECTS WITH THE ORIGINAL DESIGN INTENT."

REF. DWG: I&CU 2018_E-100

NO.	DATE	REVISIONS	BY	CHK
	9/03/21	RECORD DRAWINGS	SCP	REM

DRAWN: RJR	PROJECT NO: 3671797453
ENGINEER: REM	SCALE: NOT APPLICABLE
CHECKED: SCP	APPROVED: S.PEARSON
DATE: 10/04/19	DATE: 10/04/19

amec
AMEC E & E PC
214-25 42nd Ave
Bayside, New York 11361

LOCKHEED MARTIN CORPORATION,
FORMER UNISYS FACILITY,
LAKE SUCCESS, NEW YORK
OPERABLE UNITS NO. 1 & 2
EXTRACTION / RECOVERY WELL ELECTRICAL UPGRADES

ELECTRICAL
OU2 TREATMENT SYSTEM ELECTRICAL LAYOUT

E-112

C:\Users\roger.rigler\Wood PLC\Lockheed Martin Great Neck - R.R. Drawings\Rev Electrical Upgrade Design\Sheets\E-112.dwg Wed, 01 Sep 2021 - 1:34pm roger.rigler

UNAUTHORIZED ALTERATION OR ADDITION TO THIS DOCUMENT IS A VIOLATION OF SECTION 7209 OF THE NEW YORK STATE EDUCATION LAW.

C:\Users\roger.rigulet\Wood PLC\Lockheed Martin Great Neck - 8.0_Drawings\Rev Electrical Upgrade Design\Sheets\E-113.dwg Wed, 01 Sep 2021 - 1:35pm roger.rigulet



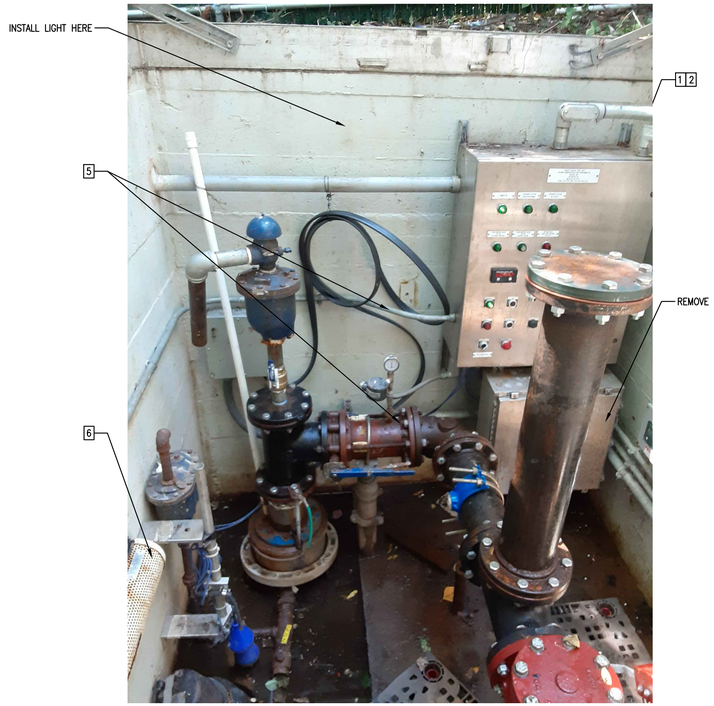

KEYED NOTES (PROPOSED WORK):

1. DISCONNECT AND REMOVE FIBER OPTIC CABLE AND PATCH PANEL/CASSETTE FROM RCP. DISCONNECT AND PULL BACK WIRES AND CABLES TO CONDUIT LB'S WHERE CONDUITS COME THRU VAULT WALL. REMOVE RCP AND REPLACE WITH 18" H X 16" W X 10" D NON-METALLIC ENCLOSURE (JB-RCP). RE-CONNECT CONDUITS COMING THRU VAULT WALL TO JB-RCP USING PVC SCH 40 CONDUITS.
2. INSTALL WIRING COMING INTO JB-RCP THRU THE VAULT WALL CONDUITS ON TERMINAL STRIPS INTO JB-RCP. INSTALL FIBER OPTIC PATCH PANEL/CASSETTE IN JB-RCP.
3. REMOVE TRANSFORMER. REMOVE CONDUIT AND WIRING TO RECEPTACLES, VAULT HEATER, AND SUMP PUMP. REPLACE RECEPTACLE ENCLOSURES WITH NONMETALLIC ENCLOSURES. INSTALL LARSON ELECTRIC HALP-24-2L-LED-NL, 7" X 24" LED LIGHT FIXTURES ON VAULT SOUTH AND EAST WALLS. REPLACE UNISTRUT SUPPORTS WITH EPOXY COATED OR NONMETALLIC UNISTRUT WITH STAINLESS STEEL FASTENERS. INSTALL NEW PVC SCH 40 CONDUITS AND WIRING FROM PANELBOARD OUTSIDE VAULT TO LIGHT SWITCHES, LIGHTS, RECEPTACLES, SUMP PUMP, VAULT HEATER, AND INSTRUMENTS. USE LIQUIDTIGHT FLEXIBLE NONMETALLIC (LFNC) CONDUIT WHERE FLEXIBILTY REQUIRED.
4. RE-USE EXISTING STAINLESS STEEL MOTOR DISCONNECT SWITCH. INSTALL NEW PVC SCH 40 CONDUIT FROM DISCONNECT SWITCH BACK TO VFD PANEL OUTSIDE VAULT. CHANGE FROM PVC CONDUIT TO PVC COATED RIGID GALVANIZED STEEL CONDUIT BEFORE LEAVING VAULT.
5. REMOVE EXISTING CONDUITS AND WIRES GOING TO VAULT INSTRUMENTS. INSTALL NEW PVC SCH 40 AND LFNC CONDUITS AND WIRING FROM INSTRUMENTS TO JB-RCP. INSTALL NEW PVC COATED RIGID GALVANIZED STEEL CONDUIT FROM JB-RCP TO NEW CONTROL PANEL OUTSIDE VAULT.
6. REMOVE EXISTING VAULT HEATER. INSTALL NEW VAULT HEATER OF SAME WATTAGE. INSTALL DRIP SHIELD ABOVE HEATER

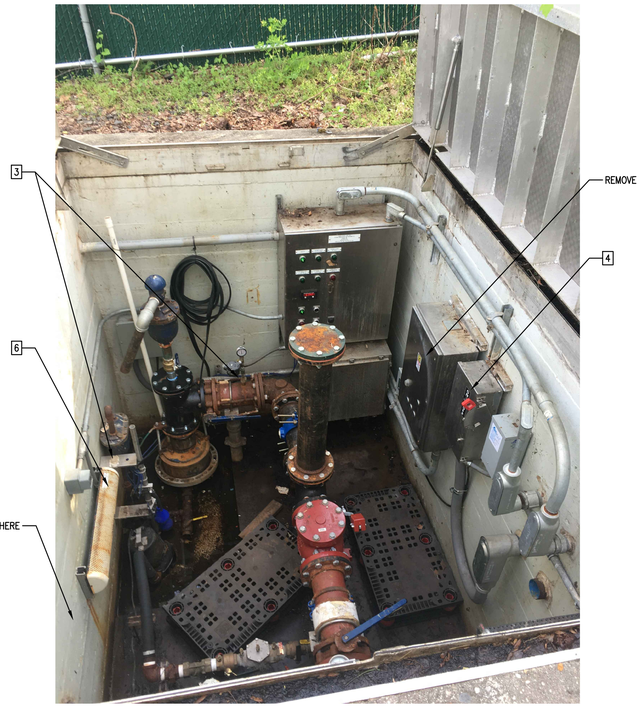



THE SIGNATURE AND SEAL OF THE UNDERSIGNED ON THIS DRAWING CERTIFIES THAT THE DESIGN INFORMATION CONTAINED IN THESE DRAWINGS ACCURATELY REFLECTS THE ORIGINAL DESIGN AND THE MATERIAL DESIGN CHANGES MADE DURING CONSTRUCTION. THAT WERE BROUGHT TO THE UNDERSIGNED'S ATTENTION. THESE DRAWINGS ARE INTENDED TO INCORPORATE ADDENDA, CHANGE ORDERS AND OTHER MATERIAL DESIGN CHANGES, BUT NOT NECESSARILY ALL SITE INSTRUCTIONS. THE UNDERSIGNED DOES NOT WARRANT OR GUARANTEE, NOR ACCEPT ANY RESPONSIBILITY FOR THE ACCURACY OR COMPLETENESS OF THE CONSTRUCTION RECORD INFORMATION SUPPLIED BY OTHERS CONTAINED IN THESE DRAWINGS, BUT DOES CERTIFY THAT THE CONSTRUCTION RECORD INFORMATION, IF ACCURATE AND COMPLETE, PROVIDES A SYSTEM WHICH SUBSTANTIALLY COMPLIES IN ALL MATERIAL RESPECTS WITH THE ORIGINAL DESIGN INTENT."

STATE OF NEW YORK
JITENDRA M. PATEL
075491
LICENSED PROFESSIONAL ENGINEER
9/1/21
jitu.patel Digitally signed by jitu.patel DN: CN=jitu.patel Date: 2021.09.01 17:19:40-04'00'

NO.	DATE	REVISIONS	BY	CHK
	9/03/21	RECORD DRAWINGS	SCP	REM

DRAWN: AJF	PROJECT NO: 3617197453
ENGINEER: REM	SCALE: AS NOTED
CHECKED: SCP	APPROVED: S. PEARSON
DATE: 10/04/19	DATE: 10/04/19

amec
AMEC E & E PC
214-25 42nd Ave
Bayside, New York 11361

LOCKHEED MARTIN CORPORATION,
FORMER UNISYS FACILITY,
LAKE SUCCESS, NEW YORK
OPERABLE UNITS NO. 1 & 2
EXTRACTION / RECOVERY WELL ELECTRICAL UPGRADES

ELECTRICAL

WELL RW-100 VAULT
ELECTRICAL PLAN

E-113

UNAUTHORIZED ALTERATION OR ADDITION TO THIS DOCUMENT IS A VIOLATION OF SECTION 7209 OF THE NEW YORK STATE EDUCATION LAW.

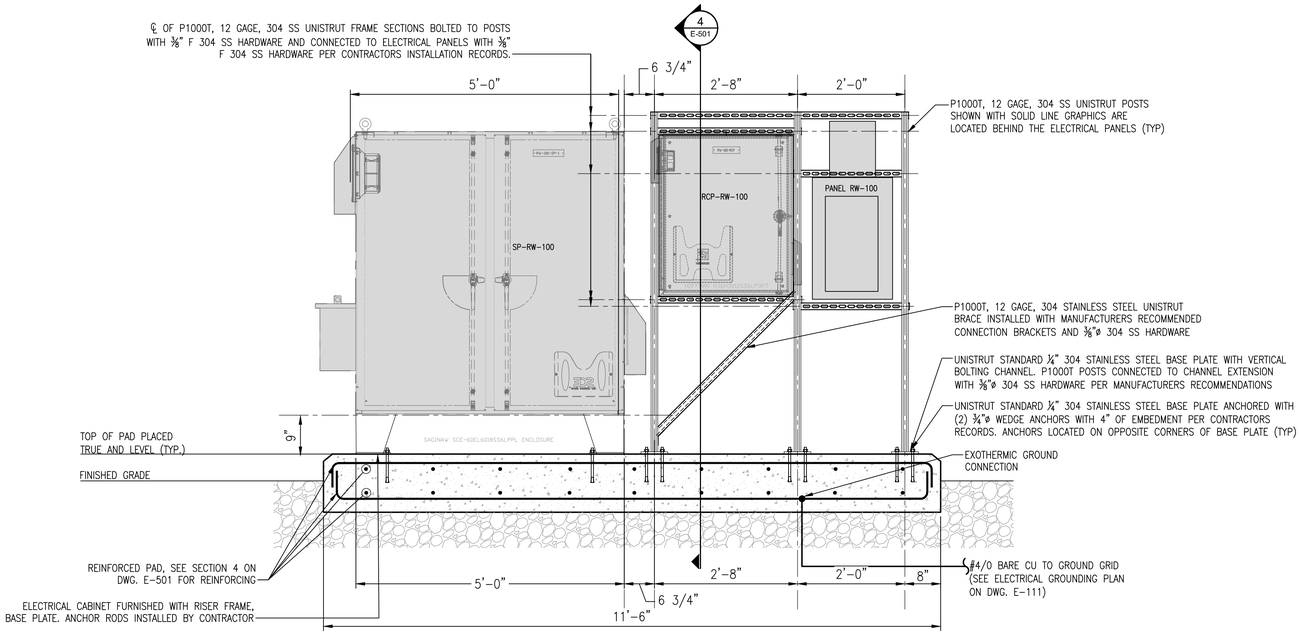

2 ES-111 SECTION AT WELL VAULT RW-100 PANEL

SCALE: 3/4"=1'-0"

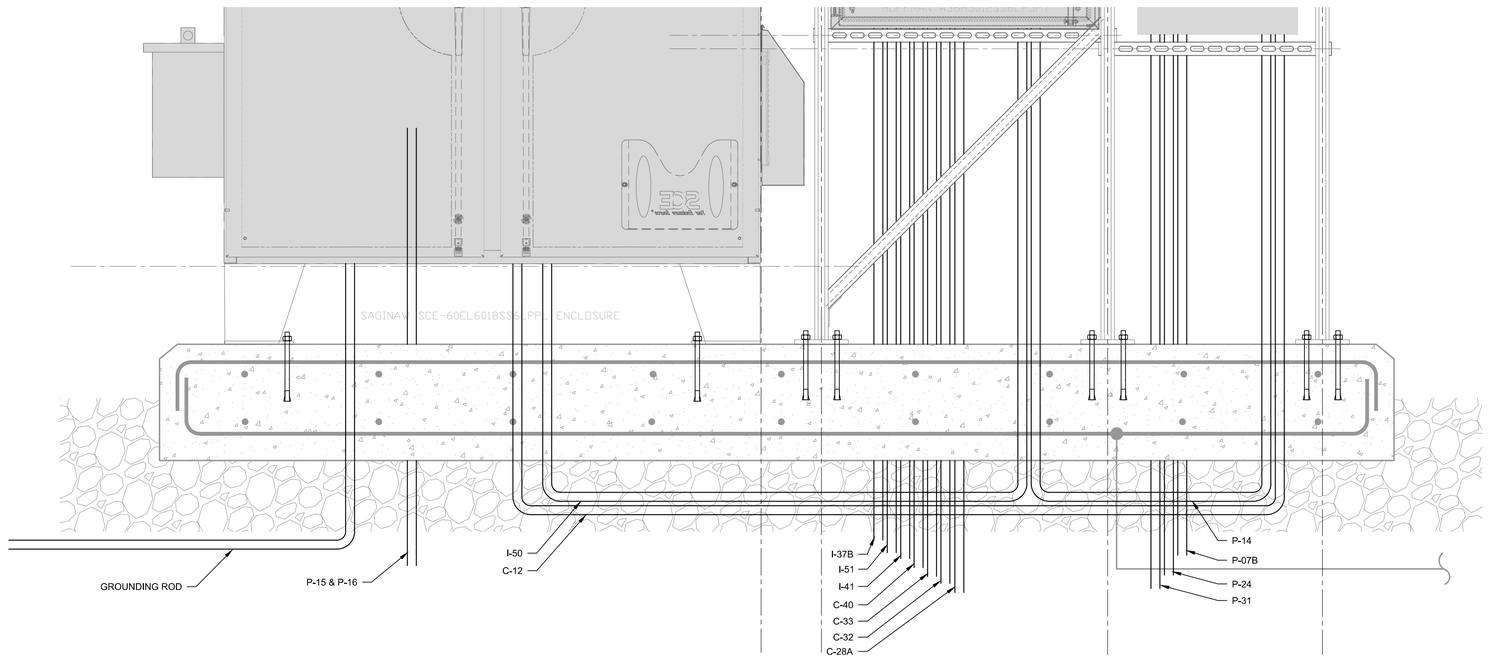

2 ES-111 RW-100 PANEL CONDUIT

SCALE: 1 1/2"=1'-0"

NOTES:

1. SEE SHEET E-001 FOR LEGEND, ABBREVIATIONS, AND GENERAL NOTES.
2. SEE SHEET E-501 FOR DESIGN CRITERIA AND GOVERNING BUILDING CODE, AND ADDITIONAL CONSTRUCTION AND MATERIAL REQUIREMENTS.

jitu.patel Digitally signed by jitu.patel Dn: cn=jitu.patel Date: 2021.09.01 17:28:04-04'00'

JITENDRA M. PATEL — STATE OF NEW YORK — LICENSED PROFESSIONAL ENGINEER — 075451

9/1/21

SEMAGE G ADANDE LUNI — STATE OF NEW YORK — LICENSED PROFESSIONAL ENGINEER — 098445 — 01/30/2021

THE SIGNATURE AND SEAL OF THE UNDERSIGNED ON THIS DRAWING CERTIFIES THAT THE DESIGN INFORMATION CONTAINED IN THESE DRAWINGS ACCURATELY REFLECTS THE ORIGINAL DESIGN AND THE MATERIAL DESIGN CHANGES MADE DURING CONSTRUCTION, THAT WERE BROUGHT TO THE UNDERSIGNED'S ATTENTION. THESE DRAWINGS ARE INTENDED TO INCORPORATE ADDENDA, CHANGE ORDERS AND OTHER MATERIAL DESIGN CHANGES, BUT NOT NECESSARILY ALL SITE INSTRUCTIONS. THE UNDERSIGNED DOES NOT WARRANT OR GUARANTEE, NOR ACCEPT ANY RESPONSIBILITY FOR THE ACCURACY OR COMPLETENESS OF THE CONSTRUCTION RECORD INFORMATION SUPPLIED BY OTHERS CONTAINED IN THESE DRAWINGS, BUT DOES CERTIFY THAT THE CONSTRUCTION RECORD INFORMATION, IF ACCURATE AND COMPLETE, PROVIDES A SYSTEM WHICH SUBSTANTIALLY COMPLIES IN ALL MATERIAL RESPECTS WITH THE ORIGINAL DESIGN INTENT."

NO.	DATE	REVISIONS	BY	CHK
	9/03/21	RECORD DRAWINGS	SCP	REM

DRAWN: DGP | PROJECT NO: 3617197453
ENGINEER: GSL | SCALE: AS NOTED
CHECKED: SK | APPROVED: S. PEARSON
DATE: 10/04/19 | DATE: 10/04/19

amec
AMEC E & E PC
214-25 42nd Ave
Bayside, New York 11361

LOCKHEED MARTIN CORPORATION,
FORMER UNISYS FACILITY,
LAKE SUCCESS, NEW YORK
OPERABLE UNITS NO. 1 & 2
EXTRACTION / RECOVERY WELL ELECTRICAL UPGRADES

ELECTRICAL

ELECTRICAL PANELS SUPPORT SECTIONS AND DETAILS

E-500

G:\Users\roger.riquier\Wood PLC\Lockheed Martin Great Neck - R.O. Drawings\Rev. Electrical Upgrade Design\Sheets\E-500.dwg Wed, 01 Sep 2021 - 1:35pm roger.riquier

UNAUTHORIZED ALTERATION OR ADDITION TO THIS DOCUMENT IS A VIOLATION OF SECTION 7209 OF THE NEW YORK STATE EDUCATION LAW.

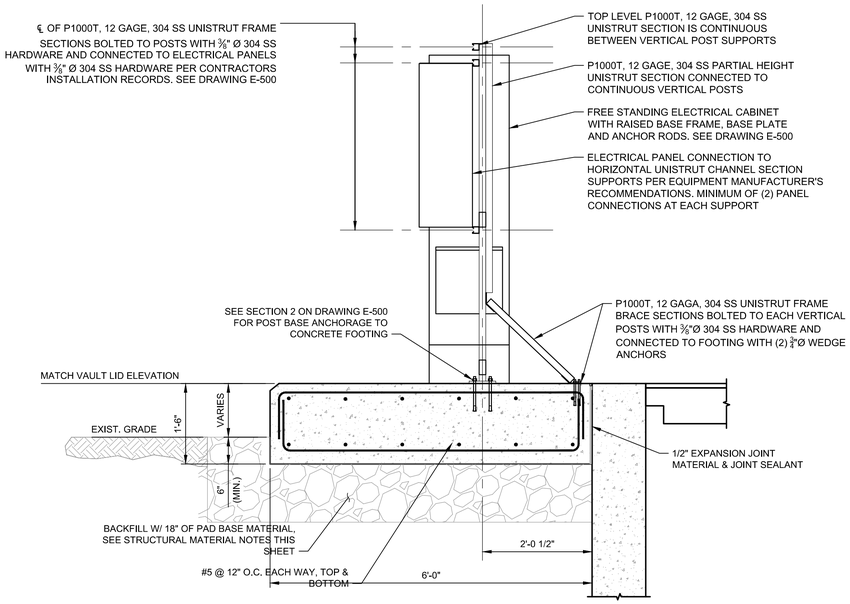

4 E-500 EQUIPMENT PAD SECTION

SCALE: 3/4"=1'-0"

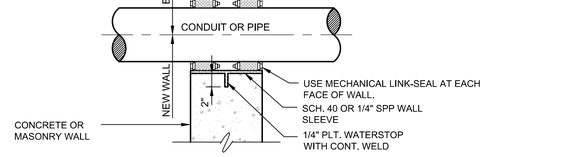

(UNLESS NOTED OTHERWISE ON THE DRAWINGS)

G E-501 TYPICAL CONDUIT SLEEVE IN EARTH, LIQUID RETAINING OR GAS TIGHT WALLS

SCALE: NTS

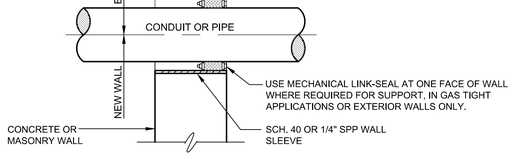

(UNLESS NOTED OTHERWISE ON THE DRAWINGS)

H E-501 TYPICAL CONDUIT SLEEVE IN NON-EARTH, OR NON-LIQUID RETAINING WALLS

SCALE: NTS

NOTE:

1. SEE SHEET E-001 FOR LEGEND, ABBREVIATIONS, AND GENERAL NOTES.
2. (VIF) = VERIFY IN FIELD

DESIGN CRITERIA AND GOVERNING BUILDING CODES:

1. THE DRAWINGS, STRUCTURAL DETAILS, AND REFERENCES TO MATERIAL SPECIFICATIONS SHALL COMPLY WITH THE APPLICABLE REQUIREMENTS AS OF THE 2018 EDITION OF THE IBC:
   a. IBC 2018 EDITION
   b. ASCE 7-16 MINIMUM DESIGN LOADS FOR BUILDINGS AND OTHER STRUCTURES.
2. DESIGN LOADS:

a.	DEAD LOAD OF MATERIALS	ACTUAL SELF-WEIGHT
b.	SNOW LOAD: GROUND SNOW LOAD (P_g):	 25 PSF
c.	WIND: BASIC DESIGN WIND SPEED (3 SECOND GUST): RISK CATEGORY: WIND EXPOSURE:	 120 MPH (ULTIMATE) II C
d.	SEISMIC: RISK CATEGORY MAPPED SPECTRAL RESPONSE COEFFICIENTS: SEISMIC IMPORTANCE FACTOR: DESIGN SPECTRAL RESPONSE COEFFICIENTS: SITE CLASS: SEISMIC DESIGN CATEGORY BASIC SEISMIC RESISTING SYSTEM: ANALYSIS PROCEDURE:	 II S_S: 0.263g S_1: 0.069g 1.0 SD_S: 0.278g SD_1: 0.111g D B SEE ASCE 7-16, TABLE 15.4-2 FOR SEISMIC COEFFICIENTS FOR NON-BUILDING STRUCTURES NOT SIMILAR TO BUILDINGS APPLIED TO CANTILEVER COLUMN ELECTRICAL PANEL SUPPORTS EQUIVALENT LATERAL FORCE

CONSTRUCTION REQUIREMENTS:

1. MAKE NO DEVIATIONS FROM THE DOCUMENTS WITHOUT WRITTEN DIRECTION FROM THE ENGINEER.
2. VERIFY ALL DIMENSIONS AND CONDITIONS IN THE FIELD. NOTIFY THE ENGINEER OF ANY DISCREPANCIES BETWEEN THE NOTES, DRAWINGS, AND EXISTING CONDITIONS BEFORE PROCEEDING WITH THE AFFECTED PORTIONS OF THE WORK.
3. COORDINATE ALL WORK WITH THE OWNER TO MINIMIZE DISRUPTION TO OPERATIONS AND PROTECT EXISTING FACILITIES, STRUCTURES, AND UTILITIES FROM DAMAGE.
4. THE ELECTRICAL PANEL SUPPORT FRAMING HAS BEEN DESIGNED TO BE SELF SUPPORTING AND STABLE ONLY AFTER THE WORK INDICATED ON THE DRAWINGS IS COMPLETED. IT IS THE CONTRACTOR'S RESPONSIBILITY TO DETERMINE ERECTION PROCEDURES AND SEQUENCE TO INSURE THE SAFETY OF THE STRUCTURES AND THEIR COMPONENTS DURING CONSTRUCTION.
5. CONSIDER SECTIONS AND DETAILS SHOWN ON DRAWINGS TO BE TYPICAL FOR SIMILAR CONDITIONS WHERE THEY APPLY OR ARE INFERRED WITHOUT SPECIFIC REFERENCE.
6. SUBMIT COMPLETE SHOP DRAWINGS FOR ALL PARTS OF THE WORK, CONSTRUCTION METHODS AND SEQUENCING WHERE APPLICABLE. NO PERFORMANCE OF THE WORK SHALL COMMENCE WITHOUT REVIEW AND APPROVAL OF THE SHOP DRAWINGS BY THE ENGINEER.
7. ADHERE TO ALL APPLICABLE FEDERAL, STATE, AND MUNICIPAL LAWS, RULES, REGULATIONS, AND ORDINANCES, INCLUDING THE FEDERAL DEPARTMENT OF LABOR OCCUPATIONAL SAFETY AND HEALTH ACT (OSHA).

STRUCTURAL MATERIALS:

1. ALL CONCRETE FOUNDATIONS FOR EQUIPMENT PADS AND SLABS IS/ARE SUPPORTED ON AN 18 INCH LAYER OF COMPACTED STONE WITH FINES IN THE TOP 2" TO PROVIDE A UNIFORM BEARING SURFACE. SEE PROJECT CONSTRUCTION SPECIFICATIONS FOR EXCAVATION AND BACKFILL REQUIREMENTS.
2. THE MINIMUM PRESUMPTIVE SOIL BEARING PRESSURE, PER THE 2018 IBC SECTION 1806, OF STABLE SOILS IS/ARE 1500 PSF AS A LOWER BOUND VALUE FOR CONDITIONS WHERE THE SOIL BEARING PRESSURE IS NOT DETERMINED BY FIELD INVESTIGATION AND BORINGS. CONTRACTOR SHALL VERIFY FOUNDATION BEARING SURFACE PRIOR TO THE INSTALLATION OF GRAVEL SUB-BASE.
3. CONCRETE STRENGTH (f 'c) IS/ARE 4000 PSI FOR EQUIPMENT FOOTINGS AND GRADE SLABS. ALL EXTERIOR CONCRETE SHALL BE AIR-ENTRAINED.
4. REINFORCING STEEL IS/ARE ASTM A615 GRADE 60 DEFORMED BARS.
5. GROUT FOR COLUMN BASE PLATES IS/ARE A HIGH EARLY STRENGTH GROUT WITH A MINIMUM COMPRESSIVE STRENGTH OF 8000 PSI SUCH AS "FIVE STAR" GROUT 100 OR APPROVED EQUAL. GROUT PREPARED AND PLACED PER MANUFACTURER'S RECOMMENDATIONS.
6. MISCELLANEOUS STEEL SHAPES REQUIRED FOR A COMPLETE INSTALLATION:
   a. PLATES, CHANNELS AND ANGLES - ASTM A304 STAINLESS STEEL
   b. SQUARE AND RECTANGULAR TUBING - ASTM A304 STAINLESS STEEL
   c. ROUND PIPES - ASTM A304 STAINLESS STEEL
   d. ANCHOR RODS - ASTM A304 SS THREADED ROD AND HARDWARE
   e. STRUCTURAL BOLTS AND FASTENERS - ASTM A304 SS OF THE SIZE INDICATED ON THE DRAWINGS.
7. EXPANSION JOINT MATERIAL SHALL CONFORM TO ASTM D 1751, ASPHALT-SATURATED CELLULOSIC FIBER.
8. JOINT SEALANT BE A SELF-LEVELING POLYSUFIDE-BASED MATERIAL MEETING THE REQUIREMENTS OF ASTM C 920, TYPE M, GRADE P, CLASS 25, NT.

jitu.patel Digitally signed by jitu.patel DN: CN=jitu.patel Reason: I am approving this document Date: 2021.09.01 12:28:51-04'00'

JITENDRA M. PATEL LICENSED PROFESSIONAL ENGINEER 075431 STATE OF NEW YORK

9/1/21

SEMASE G ADANDE KUNTI LICENSED PROFESSIONAL ENGINEER 098445 STATE OF NEW YORK DI.SEP.2021

THE SIGNATURE AND SEAL OF THE UNDERSIGNED ON THIS DRAWING CERTIFIES THAT THE DESIGN INFORMATION CONTAINED IN THESE DRAWINGS ACCURATELY REFLECTS THE ORIGINAL DESIGN AND THE MATERIAL DESIGN CHANGES MADE DURING CONSTRUCTION, THAT WERE BROUGHT TO THE UNDERSIGNED'S ATTENTION. THESE DRAWINGS ARE INTENDED TO INCORPORATE ADDENDA, CHANGE ORDERS AND OTHER MATERIAL DESIGN CHANGES, BUT NOT NECESSARILY ALL SITE INSTRUCTIONS. THE UNDERSIGNED DOES NOT WARRANT OR GUARANTEE, NOR ACCEPT ANY RESPONSIBILITY FOR THE ACCURACY OR COMPLETENESS OF THE CONSTRUCTION RECORD INFORMATION SUPPLIED BY OTHERS CONTAINED IN THESE DRAWINGS, BUT DOES CERTIFY THAT THE CONSTRUCTION RECORD INFORMATION, IF ACCURATE AND COMPLETE, PROVIDES A SYSTEM WHICH SUBSTANTIALLY COMPLIES IN ALL MATERIAL RESPECTS WITH THE ORIGINAL DESIGN INTENT."

NO.	DATE	REVISIONS	BY	CHK
	9/03/21	RECORD DRAWINGS	SCP	REM

DRAWN: DGP	PROJECT NO: 3617197453
ENGINEER: GSL	SCALE: AS NOTED
CHECKED: SK	APPROVED: S. PEARSON
DATE: 10/04/19	DATE: 10/04/19

amec
AMEC E & E PC
214-25 42nd Ave
Bayside, New York 11361

LOCKHEED MARTIN CORPORATION,
FORMER UNISYS FACILITY,
LAKE SUCCESS, NEW YORK
OPERABLE UNITS NO. 1 & 2
EXTRACTION / RECOVERY WELL ELECTRICAL UPGRADES

ELECTRICAL

ELECTRICAL PANEL & SUPPORT DETAILS

E-501

G:\Users\roger.rigler\Wood PLC\Lockheed Martin Great Neck - R.O. Drawings\Rev Electrical Upgrade Design\Sheets\E-501.dwg Wed, 01 Sep 2021 - 1:35pm roger.rigler

UNAUTHORIZED ALTERATION OR ADDITION TO THIS DOCUMENT IS A VIOLATION OF SECTION 7209 OF THE NEW YORK STATE EDUCATION LAW.

MCC LOCATION	HEIGHT	DISCRIPTION
2A	9"	POWER MONITOR CT'S
2B	6"	SURGE PROTECTOR
2C	12"	SURGE PROTECTOR
2D	18"	UNIT HEATER UH-3
2E	12"	RW-3 VAULT POWER
BLANK	3"	BLANK
3A	15"	CLEAR WELL PUMP P-100
3B	9"	ACTIVE FILTER
3C	36"	POWER TRANSFORMER 120/240, 25 KVA
4A	21"	WELL PUMP EW-1
4B	27"	DUCT HEATER DH-600
4C	12"	RW-3 WELL PUMP
5A	21"	WELL PUMP RW-1RS
5B	18"	UNIT HEATER UH-1
5C	15"	CLEAR WELL PUMP P-200
BLANK	6"	BLANK
6A	18"	UNIT HEATER UH-2
6B	18"	SVE SYSTEM POWER
6C	21"'	A/S BLOWER B-320
BLANK	3"	BLANK
7A	15"	CONTROL ROOM VENTILATOR VF-1
7B	18"	EW-1 VAULT POWER
7C	27"	PANEL "A" 120/240
8A	18"	RW-1RS VAULT POWER
8B	15"	VENTILATOR VF-2
8C	15"	WELL PUMP RW-1RD
8D	12"	RW-1RD VAULT POWER

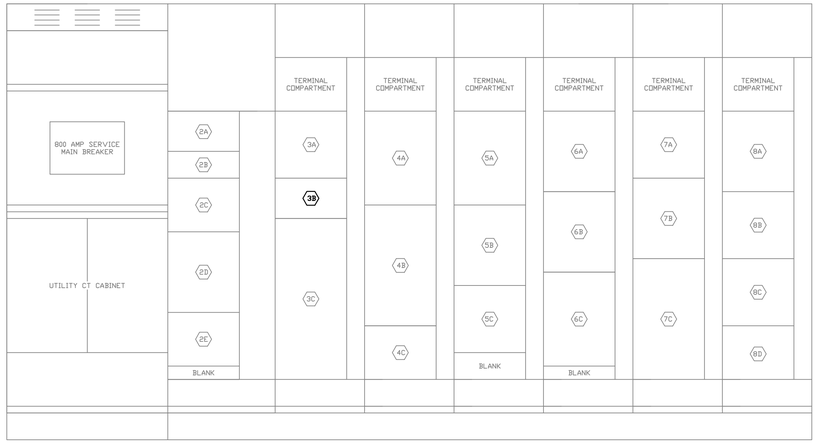

NOTES:

1. SEE SHEET E-001 FOR LEGEND, ABBREVIATIONS, AND GENERAL NOTES.
2. ESP200 OVERLOAD RELAY PROTECTION IS IN USE AT RW-1RS.

PANEL "A" SCHEDULE (MCC-1)

	DESCRIPTION	CK'T
	ELE. ROOM & BATH LIGHTS	1a
	OUTSIDE SUMP PUMP	1b
	OUTSIDE LIGHTS	15a
	PROCESS ROOM LIGHTS	15b
	OUTSIDE LIGHTS	17a
	REFRIGERATOR	17b
	DESK RECEPTACLE	19a
	FIT10, XS10, LEAK DETECT SYS	19b

PANEL "A" SCHEDULE (MCC-1)

120/240, 1ø, 3 WIRE, 150A, NEMA TYPE 1, CIR. BR. TYPE: BOLT-ON, EQUIPPED WITH GROUND AND NEUTRAL BUS

DESCRIPTION	WIRE	COND	POLE	AMP	CK'T
ELE. ROOM & BATH LIGHTS & OUTSIDE SUMP PUMP	(2)#12 AWG & (1)#12 AWG GND	N/A	1	20	1
DAMPER MOTOR CONTROL	(2)#12 AWG & (1)#12 AWG GND	N/A	1	20	3
HEAT TRACE & OUTSIDE LIGHTS	(2)#12 AWG & (1)#12 AWG GND	N/A	1	20	5
BATHROOM RECEPT.	(2)#12 AWG & (1)#12 AWG GND	N/A	1	15	7
SCADA	(2)#12 AWG & (1)#12 AWG GND	N/A	1	15	9
AC	(2)#12 AWG & (1)#12 AWG GND	N/A	2	20	11 13
OUTSIDE LIGHTS/PROCESS ROOM	(2)#12 AWG & (1)#12 AWG GND	N/A	1	20	15
OUTSIDE LIGHTS/REFRIGERATOR	(2)#12 AWG & (1)#12 AWG GND	N/A	1	20	17
DESK RECEPT.	(2)#12 AWG & (1)#12 AWG GND	N/A	1	15	19
MAIN			2	100	21 23

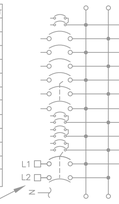

CK'T	AMP	POLE	COND	CONDUCTORS	DESCRIPTION
2	20	1	N/A	(2)#12 AWG & (1)#12 AWG GND	EAGLE CONTROL (MCP)
4	20	1	N/A	(2)#12 AWG & (1)#12 AWG GND	EAGLE CONTROL (MCP V-100/210 POWER)
6	15	1	N/A	(2)#12 AWG & (1)#12 AWG GND	MOTION LIGHTS
8	15	1	N/A	(2)#12 AWG & (1)#12 AWG GND	SSDS RADIO PANEL POWER OUTSIDE RADIO CAB, ALLSTATE BLVD.
10	15	1	N/A	(2)#12 AWG & (1)#12 AWG GND	KNOCKOUT PUMP RECEPT.
12	20	1	N/A	(2)#12 AWG & (1)#12 AWG GND	KNOCK OUT TANK PUMP SOLENOID VAVLE
14	20	1	N/A	(2)#12 AWG & (1)#12 AWG GND	OUTSIDE RESEPT (STRIPPER)
16	20	1	N/A	(2)#12 AWG & (1)#12 AWG GND	PROCESS & ELECTRICAL ROOM RECEPT.
18	20	1	N/A	(2)#12 AWG & (1)#12 AWG GND	BACKUP PANEL POWER FEED & NEW PIPELINE PANEL
20	20	1	N/A	(2)#12 AWG & (1)#12 AWG GND	SECURITY

PANEL B SCHEDULE (RW-1RS)

120/240, 1 , 3 WIRE, 60A, NEMA TYPE 3R, CIRCUIT BREAKER TYPE: BOLT-ON, EQUIPPED WITH GROUND AND NEUTRAL BUS, 18KA

DESCRIPTION	WIRE	COND	POLE	AMP	CK'T
GFCI RECEPT. RWS	(2)#12 AWG & (1)#12 AWG GND	N/A	1	15	1
LIGHTS RWS-RWD	(2)#12 AWG & (1)#12 AWG GND	N/A	1	20	3
CONTROL PANEL	(2)#12 AWG & (1)#12 AWG GND	P-21	1	20	5
HEATER	(2)#12 AWG & (1)#12 AWG GND	N/A	1	20	7
SPARE	(2)#12 AWG & (1)#12 AWG GND	N/A	2	20	9

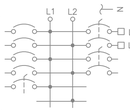

CK'T	AMP	POLE	COND	CONDUCTORS	DESCRIPTION
2	60	2	N/A	(2)#6 AWG & (1)#6 AWG GND	SECONDARY MAIN DISCONNECT
4					
6	20	2	N/A	(2)#12 AWG & (1)#12 AWG GND	SUMP PUMP
8					
10					SPACE

PANEL C SCHEDULE (EW-1 / EW-1R)

120/240, 1 , 3 WIRE, 60A, NEMA TYPE 3R, CIRCUIT BREAKER TYPE: BOLT-ON, EQUIPPED WITH GROUND AND NEUTRAL BUS,18KA

DESCRIPTION	WIRE	COND	POLE	AMP	CK'T
CONTROL PANEL	(2)#12 AWG & (1)#12 AWG GND	N/A	1	20	1
GFCI RECEPT.	(2)#12 AWG & (1)#12 AWG GND	N/A	1	20	3
LIGHTS	(2)#12 AWG & (1)#12 AWG GND	P-26	1	20	5
HEATER	(2)#12 AWG & (1)#12 AWG GND	N/A	1	20	7
SPACE					9

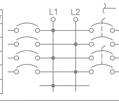

CK'T	AMP	POLE	COND	CONDUCTORS	DESCRIPTION
2	60	2	N/A	(2)#6 AWG & (1)#6 AWG GND	SECONDARY MAIN DISCONNECT
4					
6	20	2	N/A	(2)#12 AWG & (1)#12 AWG GND	SUMP PUMP
8					
10					SPACE

PANEL D SCHEDULE (RW-1RD)

120/240, 1 , 3 WIRE, 60A, NEMA TYPE 3R, CIRCUIT BREAKER TYPE: BOLT-ON, EQUIPPED WITH GROUND AND NEUTRAL BUS, 18KA

DESCRIPTION	WIRE	COND	POLE	AMP	CK'T
SECONDARY MAIN DISCONNECT	(2)#6 AWG & (1)#6 AWG GND	N/A	2	60	1 2
SUMP PUMP	(2)#12 AWG & (1)#12 AWG GND	N/A	2	20	3 4
RECEPTICLES (HEATER, RECEPT.)	(2)#12 AWG & (1)#12 AWG GND	N/A	1	20	5
LIGHTS	(2)#12 AWG & (1)#12 AWG GND	N/A	1	15	6
CONTROL PANEL	(2)#12 AWG & (1)#12 AWG GND	P-26	1	20	7
SPACE					8

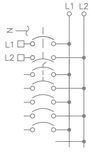

PANEL F SCHEDULE (RW-3)

120/240, 1 , 3 WIRE, 40A, NEMA TYPE 3R, CIRCUIT BREAKER TYPE: CLIP-ON, EQUIPPED WITH GROUND AND NEUTRAL BUS

DESCRIPTION	WIRE	COND	POLE	AMP	CK'T
CONTROL PANEL	(2)#12 AWG & (1)#12 AWG GND	N/A	1	20	1
GFCI RECEPT.	(2)#12 AWG & (1)#12 AWG GND	N/A	1	20	3
LIGHTS	(2)#12 AWG & (1)#12 AWG GND	P-26	1	20	5
HEATER	(2)#12 AWG & (1)#12 AWG GND	N/A	1	20	7
SPACE					9
SPACE					11

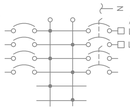

CK'T	AMP	POLE	COND	CONDUCTORS	DESCRIPTION
2	60	2	N/A	(2)#6 AWG & (1)#6 AWG GND	SECONDARY MAIN DISCONNECT
4					
6	20	2	N/A	(2)#12 AWG & (1)#12 AWG GND	SUMP PUMP
8					
10					SPACE
12					SPACE

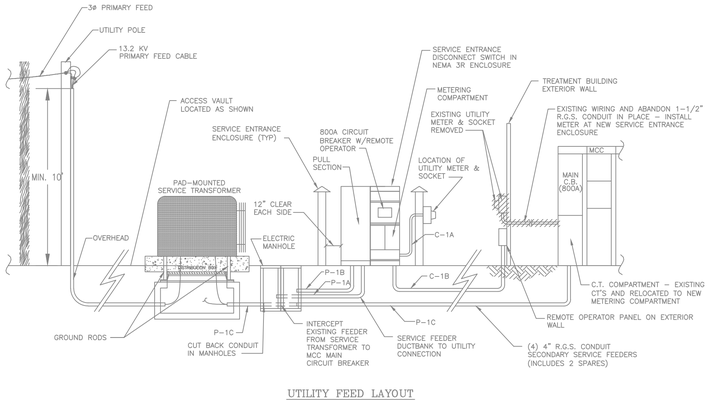

UTILITY FEED LAYOUT
N.T.S.

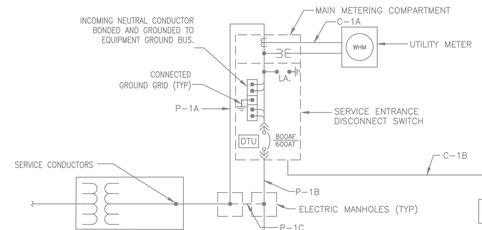

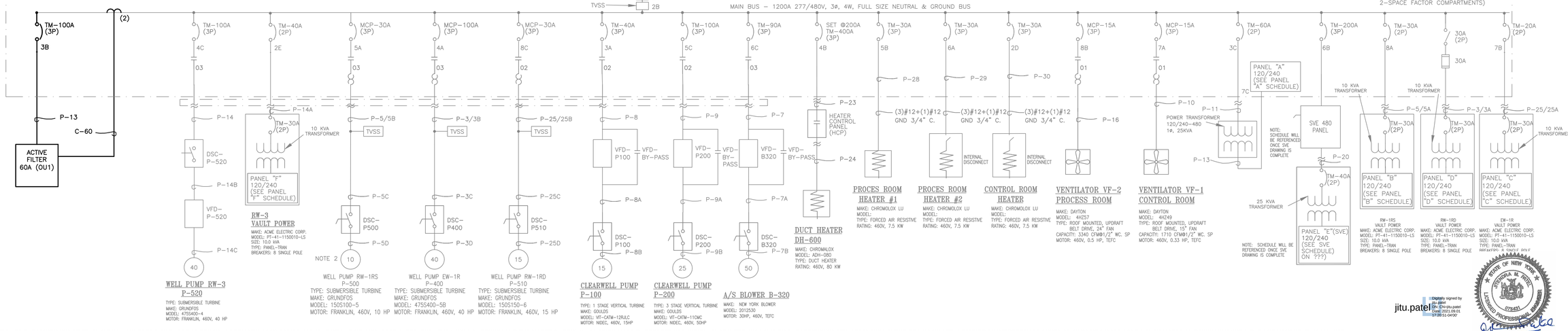

THE SIGNATURE AND SEAL OF THE UNDERSIGNED ON THIS DRAWING CERTIFIES THAT THE DESIGN INFORMATION CONTAINED IN THESE DRAWINGS ACCURATELY REFLECTS THE ORIGINAL DESIGN AND THE MATERIAL DESIGN CHANGES MADE DURING CONSTRUCTION, THAT WERE BROUGHT TO THE UNDERSIGNED'S ATTENTION. THESE DRAWINGS ARE INTENDED TO INCORPORATE ADDENDA, CHANGE ORDERS AND OTHER MATERIAL DESIGN CHANGES, BUT NOT NECESSARILY ALL SITE INSTRUCTIONS. THE UNDERSIGNED DOES NOT WARRANT OR GUARANTEE, NOR ACCEPT ANY RESPONSIBILITY FOR THE ACCURACY OR COMPLETENESS OF THE CONSTRUCTION RECORD INFORMATION SUPPLIED BY OTHERS CONTAINED IN THESE DRAWINGS, BUT DOES CERTIFY THAT THE CONSTRUCTION RECORD INFORMATION, IF ACCURATE AND COMPLETE, PROVIDES A SYSTEM WHICH SUBSTANTIALLY COMPLIES IN ALL MATERIAL RESPECTS WITH THE ORIGINAL DESIGN INTENT."

jitu.patel

Digitally signed by jitu patel
DN: cn=jitu.patel
Date: 2021.09.01 07:28:51-04'00'

STATE OF NEW YORK
SHIKHA M. PATEL
075431
LICENSED PROFESSIONAL ENGINEER

9/1/21

NO.	DATE	REVISIONS	BY	CHK
	9/03/21	RECORD DRAWINGS	SCP	REM

DRAWN: NJG	PROJECT NO: 3617197453
ENGINEER: REM	SCALE: NOT APPLICABLE
CHECKED: SCP	APPROVED: S. PEARSON
DATE: 10/04/19	DATE: 10/04/19

amec
AMEC E & E PC
214-25 42nd Ave
Bayside, New York 11361

LOCKHEED MARTIN CORPORATION,
FORMER UNISYS FACILITY,
LAKE SUCCESS, NEW YORK
OPERABLE UNITS NO. 1 & 2
EXTRACTION / RECOVERY WELL ELECTRICAL UPGRADES

ELECTRICAL

OU1
SINGLE LINE DIAGRAM
AND PANELBOARD SCHEDULES

E-601

C:\Users\roger.rquiler\Wood PLC\Lockheed Martin Great Neck - 8.0_Drawings\Rev Electrical Upgrade Design\Sheets\E-601.dwg Wed, 01 Sep 2021 - 1:35pm roger.rquiler

UNAUTHORIZED ALTERATION OR ADDITION TO THIS DOCUMENT IS A VIOLATION OF SECTION 7209 OF THE NEW YORK STATE EDUCATION LAW.

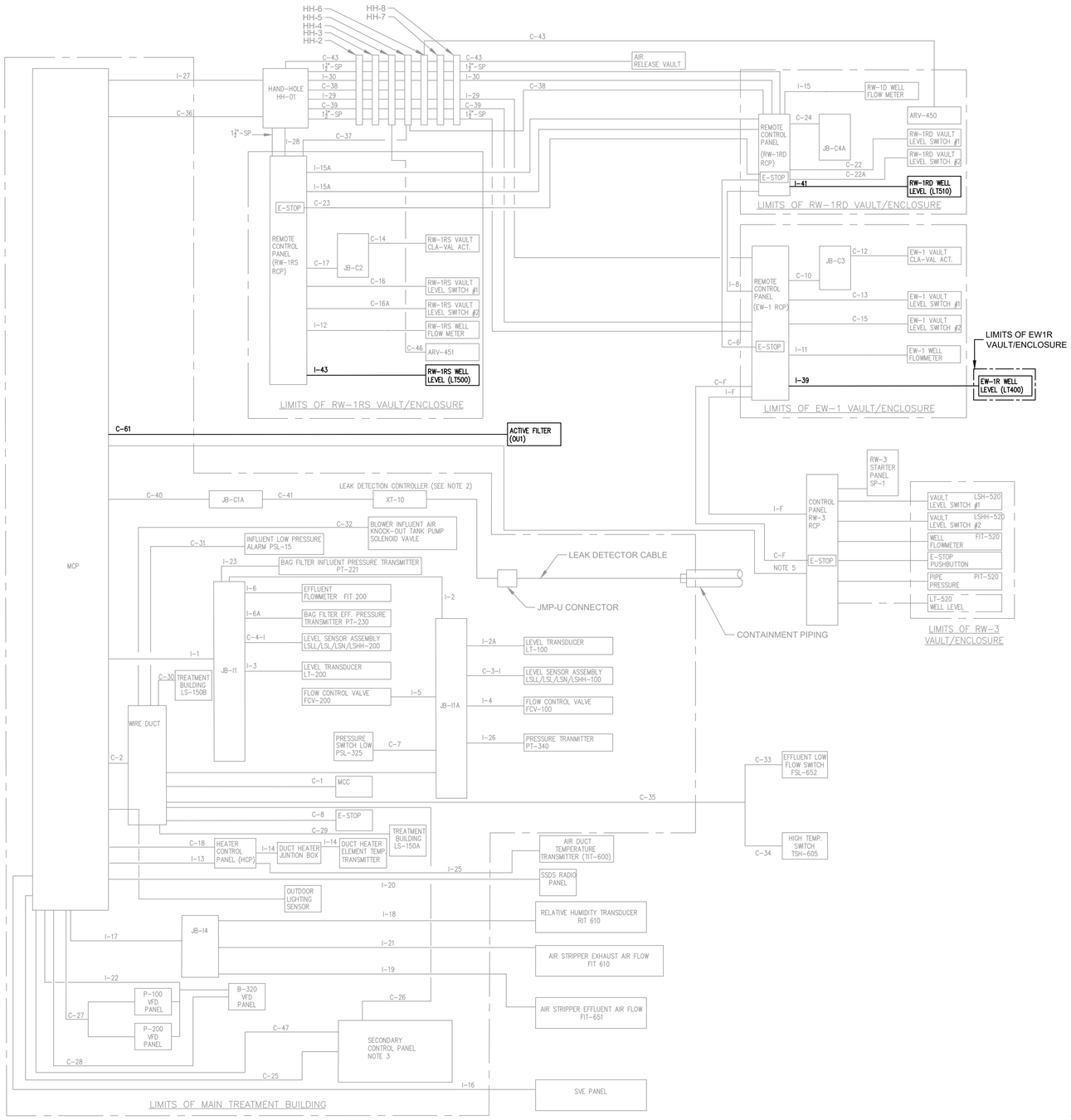

CONTROL/INSTRUMENT RISER DIAGRAM
(N.T.S.)

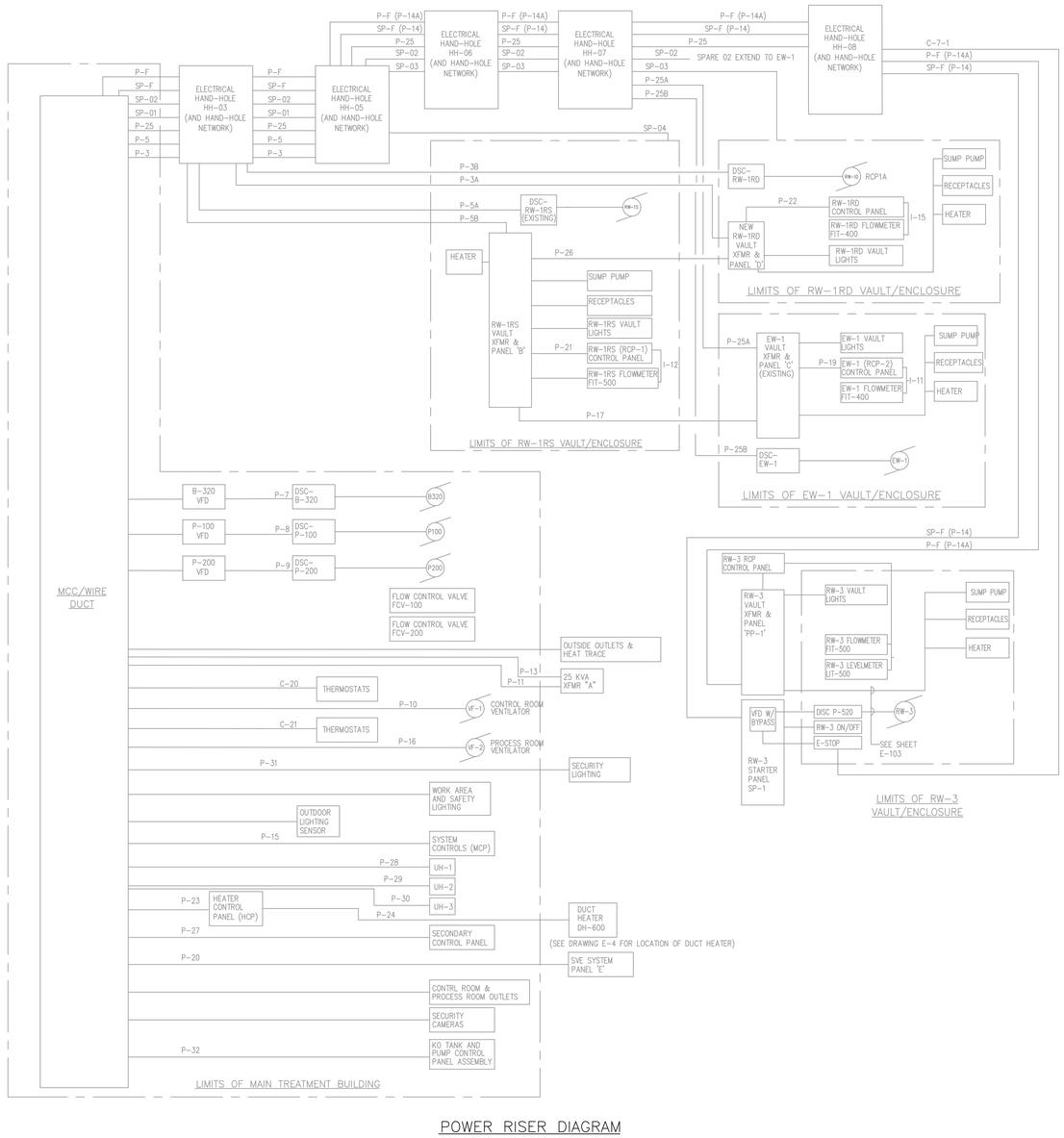

POWER RISER DIAGRAM
(N.T.S.)

NOTES:

1. SEE DRAWING E-001 FOR LEGEND, ABBREVIATIONS, AND GENERAL NOTES.
2. SEE DRAWINGS E-103, E-104, AND E-105 FOR DEVICES, CONDUITS, AND WIRING BEING REPLACED IN VAULTS.

STATE OF NEW YORK
STEPHEN M. PIRET
075431
LICENSED PROFESSIONAL ENGINEER
9/1/21

jitu.patel Digitally signed by jitu.patel DN: cn=jitu.patel Date: 2021.09.01 17:23:10-04'00'

THE SIGNATURE AND SEAL OF THE UNDERSIGNED ON THIS DRAWING CERTIFIES THAT THE DESIGN INFORMATION CONTAINED IN THESE DRAWINGS ACCURATELY REFLECTS THE ORIGINAL DESIGN AND THE MATERIAL DESIGN CHANGES MADE DURING CONSTRUCTION, THAT WERE BROUGHT TO THE UNDERSIGNED'S ATTENTION. THESE DRAWINGS ARE INTENDED TO INCORPORATE ADDENDA, CHANGE ORDERS AND OTHER MATERIAL DESIGN CHANGES, BUT NOT NECESSARILY ALL SITE INSTRUCTIONS. THE UNDERSIGNED DOES NOT WARRANT OR GUARANTEE, NOR ACCEPT ANY RESPONSIBILITY FOR THE ACCURACY OR COMPLETENESS OF THE CONSTRUCTION RECORD INFORMATION SUPPLIED BY OTHERS CONTAINED IN THESE DRAWINGS, BUT DOES CERTIFY THAT THE CONSTRUCTION RECORD INFORMATION, IF ACCURATE AND COMPLETE, PROVIDES A SYSTEM WHICH SUBSTANTIALLY COMPLIES IN ALL MATERIAL RESPECTS WITH THE ORIGINAL DESIGN INTENT."

NO.	DATE	REVISIONS	BY	CHK
	9/03/21	RECORD DRAWINGS	SCP	REM

DRAWN: NJG	PROJECT NO: 3617197453
ENGINEER: SCP	SCALE: AS NOTED
CHECKED: REM	APPROVED: S. PEARSON
DATE: 10/04/19	DATE: 10/04/19

amec
AMEC E & E PC
214-25 42nd Ave
Bayside, New York 11361

LOCKHEED MARTIN CORPORATION,
FORMER UNISYS FACILITY,
LAKE SUCCESS, NEW YORK
OPERABLE UNITS NO. 1 & 2
EXTRACTION / RECOVERY WELL ELECTRICAL UPGRADES

ELECTRICAL
OU1
WELLS POWER, CONTROLS, & INSTRUMENTATION
RISER DIAGRAM

E-602

C:\Users\roger.risavi\Wood PLC\Lockheed Martin Great Neck - 8.0_Drawings\Rev. Electrical Upgrade Design\Sheets\E-602.dwg Wed, 01 Sep 2021 - 1:35pm roger.risavi

UNAUTHORIZED ALTERATION OR ADDITION TO THIS DOCUMENT IS A VIOLATION OF SECTION 7209 OF THE NEW YORK STATE EDUCATION LAW.

CONDUIT #	SIZE	CONDUIT TYPE	CONDUCTOR SIZE & TYPE	PURPOSE	ORIGINATION	TERMINATION
P-13	**1 1/2"**	**RIGID**	**(3) #3 AWG XHHW, (1) #6 AWG XHHW**	**ACTIVE FILTER POWER FEED**	**MCC 3B**	**ACTIVE FILTER**
CONDUIT #	**SIZE**	**CONDUIT TYPE**	**CONDUCTOR SIZE & TYPE**	**PURPOSE**	**ORIGINATION**	**TERMINATION**
C-10	3/4"	PVC RIGID	(16) #14 AWG THWN, 4 ARE SPARES	EW-1 VAULT CONTROLS	RCP-EW-1R	SP-EW-1R
C-13	3/4"	PVC RIGID/LIQUIDTITE FLEX	(3) #12 AWG THWN	EW-1 VAULT HIGH HIGH LEVEL SWITCH	RCP-EW-1R	LSHH-400A
C-13A	3/4"	PVC RIGID/LIQUIDTITE FLEX	(3) #12 AWG THWN	EW-1R VAULT HIGH HIGH LEVEL SWITCH	RCP-EW-1R	LSHH-400B
C-15	3/4"	PVC RIGID/LIQUIDTITE FLEX	(3) #12 AWG THWN	EW-1 VAULT HIGH LEVEL SWITCH	RCP-EW-1R	LSH-400A
C-15A	3/4"	PVC RIGID/LIQUIDTITE FLEX	(3) #12 AWG THWN	EW-1R VAULT HIGH LEVEL SWITCH	RCP-EW-1R	LSH-400B
C-16	3/4"	PVC RIGID/LIQUIDTITE FLEX	(4) #12 AWG THWN	RW-1RS VAULT HIGH HIGH LEVEL SWITCH	RCP-RW-IRS	LSHH-500
C-16A	3/4"	PVC RIGID/LIQUIDTITE FLEX	(4) #12 AWG THWN	RW-1RS VAULT HIGH LEVEL SWITCH	RCP-RW-IRS	LSH-500
C-17	3/4"	PVC RIGID	(16) #14 AWG THWN, 4 ARE SPARES	RW-1RS VAULT CONTROLS	RCP-RW-IRS	SP-RW-1RS
C-22	3/4"	PVC RIGID/LIQUIDTITE FLEX	(3) #14 AWG THWN	RW-1RD VAULT HIGH HIGH LEVEL SWITCH	RCP-RW-IRD	LSHH-510
C-22A	3/4"	PVC RIGID/LIQUIDTITE FLEX	(3) #14 AWG THWN	RW-1RD VAULT HIGH LEVEL SWITCH	RCP-RW-IRD	LSH-510
C-24	3/4"	PVC RIGID	(16) #14 AWG THWN, 4 ARE SPARES	RW-1RD VAULT CONTROLS	RCP-RW-IRD	SP-RW-1RD
C-60	**1"**	**RIGID**	**2-1 PR TWSHLD #12 AWG CABLE**	**ACTIVE FILTER CT LEADS**	**MCC BUS**	**ACTIVE FILTER**
C-61	**3/4"**	**RIGID**	**(5) #14 AWG THWN**	**ACTIVE FILTER STATUS INFORMATION**	**MCP-100**	**ACTIVE FILTER**
CONDUIT #	**SIZE**	**CONDUIT TYPE**	**CONDUCTOR SIZE & TYPE**	**PURPOSE**	**ORIGINATION**	**TERMINATION**
I-11	3/4"	PVC RIGID/LIQUIDTITE FLEX	#18 AWG TWISTED SHIELDED PAIR (BELDEN 1120A)	EW-1R FLOW METER SIGNAL	RCP-EW-1R	FT-400
I-12	3/4"	PVC RIGID/LIQUIDTITE FLEX	#18 AWG TWISTED SHIELDED PAIR (BELDEN 1120A)	RW-1RS FLOW METER SIGNAL	RCP-RW-IRS	FT-500
I-15	3/4"	PVC RIGID/LIQUIDTITE FLEX	#18 AWG TWISTED SHIELDED PAIR (BELDEN 1120A)	RW-IRD FLOW METER SIGNAL	RCP-RW-IRD	FT-510
I-39	**3/4"**	**PVC RIGID/LIQUIDTITE FLEX**	**#18 AWG TWISTED SHIELDED PAIR (BELDEN 1120A)**	**EW-IR WELL LEVEL TRANSMITTER**	**LT-400**	**RCP-EW-1R**
I-41	**3/4"**	**PVC RIGID/LIQUIDTITE FLEX**	**#18 AWG TWISTED SHIELDED PAIR (BELDEN 1120A)**	**RW-1RD WELL LEVEL TRANSMITTER**	**LT-510**	**RCP-RW-1RD**
I-43	**3/4"**	**PVC RIGID/LIQUIDTITE FLEX**	**#18 AWG TWISTED SHIELDED PAIR (BELDEN 1120A)**	**RW-1RS WELL LEVEL TRANSMITTER**	**LT-500**	**RCP-RW-1RS**

* TRANSITION TO PVC COATED RIGID GALVANIZED STEEL CONDUIT 2 FT PRIOR TO BUILDING AND VAULT

C:\Users\roger.riquier\Wood PLC\Lockheed Martin Great Neck - 8.0_Drawings\Rev. Electrical Upgrade Design\Sheets\E-605.dwg Wed, 01 Sep 2021 - 1:35pm roger.riquier

STATE OF NEW YORK
JITENDRA M. PATEL
075491
LICENSED PROFESSIONAL ENGINEER
9/1/21

jitu.patel Digitally signed by jitu.patel
DN: CN=jitu.patel
Date: 2021.09.01 17:21:33-04'00'

THE SIGNATURE AND SEAL OF THE UNDERSIGNED ON THIS DRAWING CERTIFIES THAT THE DESIGN INFORMATION CONTAINED IN THESE DRAWINGS ACCURATELY REFLECTS THE ORIGINAL DESIGN AND THE MATERIAL DESIGN CHANGES MADE DURING CONSTRUCTION, THAT WERE BROUGHT TO THE UNDERSIGNED'S ATTENTION. THESE DRAWINGS ARE INTENDED TO INCORPORATE ADDENDA, CHANGE ORDERS AND OTHER MATERIAL DESIGN CHANGES, BUT NOT NECESSARILY ALL SITE INSTRUCTIONS. THE UNDERSIGNED DOES NOT WARRANT OR GUARANTEE, NOR ACCEPT ANY RESPONSIBILITY FOR THE ACCURACY OR COMPLETENESS OF THE CONSTRUCTION RECORD INFORMATION SUPPLIED BY OTHERS CONTAINED IN THESE DRAWINGS, BUT DOES CERTIFY THAT THE CONSTRUCTION RECORD INFORMATION, IF ACCURATE AND COMPLETE, PROVIDES A SYSTEM WHICH SUBSTANTIALLY COMPLIES IN ALL MATERIAL RESPECTS WITH THE ORIGINAL DESIGN INTENT."

NO.	DATE	REVISIONS	BY	CHK
	9/03/21	RECORD DRAWINGS	SCP	REM

DRAWN: AJF	PROJECT NO: 3617197453		
ENGINEER: REM	SCALE: NOT APPLICABLE		
CHECKED: SCP	APPROVED: S. PEARSON		
DATE: 10/04/19	DATE: 10/04/19		

amec
AMEC E & E PC
214-25 42nd Ave
Bayside, New York 11361

LOCKHEED MARTIN CORPORATION,
FORMER UNISYS FACILITY,
LAKE SUCCESS, NEW YORK
OPERABLE UNITS NO. 1 & 2
EXTRACTION / RECOVERY WELL ELECTRICAL UPGRADES

ELECTRICAL

OU1
WELLS RW-1RS, RW-1RD, EW-1 & GWTF
CABLE SCHEDULE

E-605

UNAUTHORIZED ALTERATION OR ADDITION TO THIS DOCUMENT IS A VIOLATION OF SECTION 7209 OF THE NEW YORK STATE EDUCATION LAW.

NOTES:

1. SEE SHEET E-001 FOR LEGEND, ABBREVIATIONS, AND GENERAL NOTES.
2. POWER FEED TO RECOVERY WELL VAULT HAS SPARE CONDUIT (P-7A) INSTALLED FOR POTENTIAL FUTURE USE. MAJORITY OF UNDERGROUND CONDUITS (FROM PLANT INFLUENT VAULT TO RECOVERY WELL VAULT) HAVE BEEN INSTALLED.
3. THE VARIABLE FREQUENCY DRIVE (VFD) FOR P-225 IS A SQUARE D ALTIVAR 61 25HP ATV61HD18N4 WITH LINE AND LOAD FILTERS. THE ADJUSTABLE SPEED DRIVE (ASD) FOR ASD-310 IS A FREE STANDING, SQUARE D, ALTIVAR 58 TRX AC DRIVE, MODEL NO. ATV58HD79N4XZU.
4. BASE DRAWING PREPARED FROM RECORD DRAWING INFORMATION FROM ARCADIS DRAWINGS ENTITLED "OFF-SITE INTERIM REMEDIAL MEASURE (IRM) RECORD DRAWINGS, FORMER UNISYS FACILITY, GREAT NECK, NEW YORK, MARCH 2005".

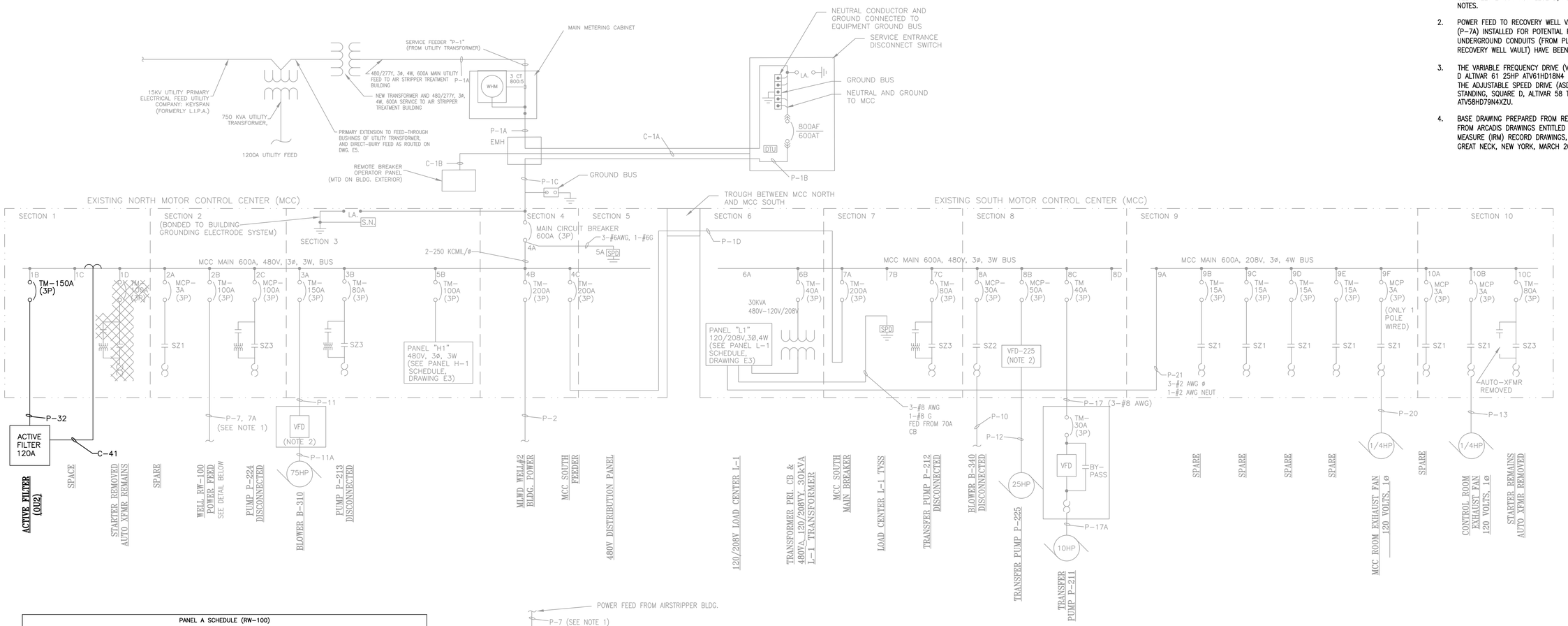

PANEL A SCHEDULE (RW-100)						
120/240, 1PH, 3 WIRE, 30A, 18KA, NEMA TYPE 3R, CIRCUIT BREAKER TYPE: BOLT-ON, EQUIPPED WITH GROUND AND NEUTRAL BUS						
DESCRIPTION	WIRE	COND	POLE	AMP	CKT	
SECONDARY MAIN DISCONNECT	(2)#10 AWG & (1)#10 AWG GND	N/A	2	30	1	
					2	
SUMP PUMP	(2)#12 AWG & (1)#12 AWG GND	N/A	1	20	3	
SPACE					4	
RECEPTACLES (HEATER, RECEPT.)	(2)#12 AWG & (1)#12 AWG GND	N/A	1	20	5	
LIGHTS	(2)#12 AWG & (1)#12 AWG GND	N/A	1	15	6	
CONTROL PANEL	(2)#12 AWG & (1)#12 AWG GND	P-26	1	20	7	
SPACE					8	

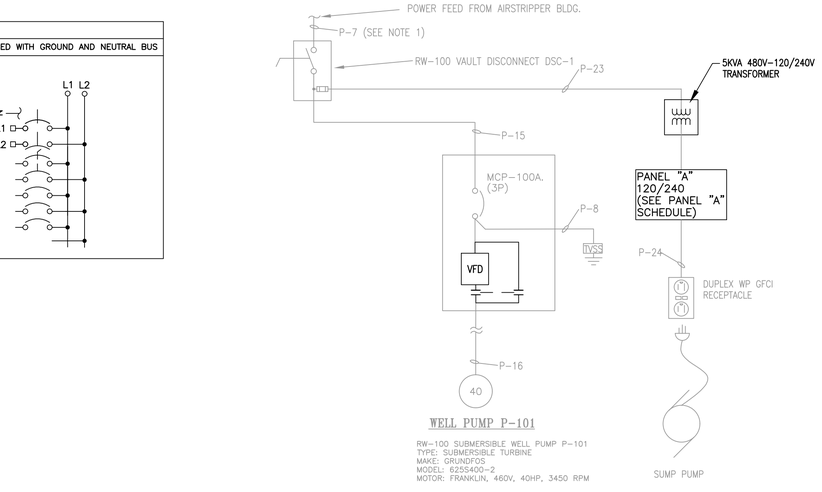

WELL RW-100 AREA POWER DISTRIBUTION DIAGRAM
SCALE: NOT TO SCALE

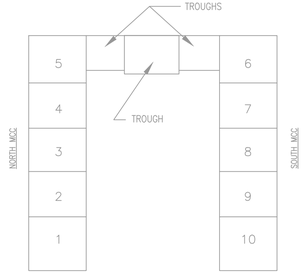

MOTOR CONTROL CENTER PLAN VIEW
SCALE: NOT TO SCALE

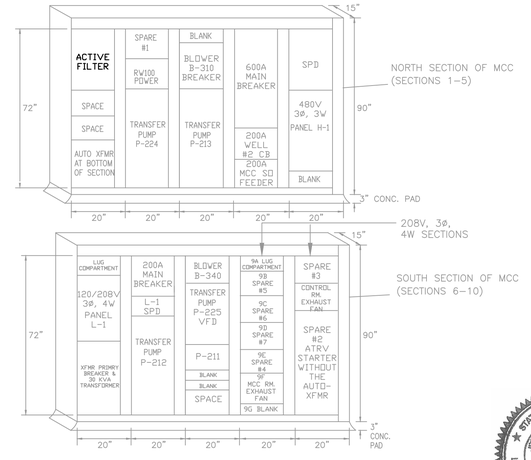

MOTOR CONTROL CENTER DETAIL
SCALE: NOT TO SCALE

THE SIGNATURE AND SEAL OF THE UNDERSIGNED ON THIS DRAWING CERTIFIES THAT THE DESIGN INFORMATION CONTAINED IN THESE DRAWINGS ACCURATELY REFLECTS THE ORIGINAL DESIGN AND THE MATERIAL DESIGN CHANGES MADE DURING CONSTRUCTION, THAT WERE BROUGHT TO THE UNDERSIGNED'S ATTENTION. THESE DRAWINGS ARE INTENDED TO INCORPORATE ADDENDA, CHANGE ORDERS AND OTHER MATERIAL DESIGN CHANGES, BUT NOT NECESSARILY ALL SITE INSTRUCTIONS. THE UNDERSIGNED DOES NOT WARRANT OR GUARANTEE, NOR ACCEPT ANY RESPONSIBILITY FOR THE ACCURACY OR COMPLETENESS OF THE CONSTRUCTION RECORD INFORMATION SUPPLIED BY OTHERS CONTAINED IN THESE DRAWINGS, BUT DOES CERTIFY THAT THE CONSTRUCTION RECORD INFORMATION, IF ACCURATE AND COMPLETE, PROVIDES A SYSTEM WHICH SUBSTANTIALLY COMPLIES IN ALL MATERIAL RESPECTS WITH THE ORIGINAL DESIGN INTENT."

STATE OF NEW YORK
JITENDRA M. PATEL
LICENSED PROFESSIONAL ENGINEER
075431
9/1/21
Digitally signed by jitu.patel
DN: CN=jitu.patel
Date: 2021.09.01 17:28:50-04'00'
jitu.patel

NO.	DATE	REVISIONS	BY	CHK
	9/03/21	RECORD DRAWINGS	SCP	REM

DRAWN: NJG	PROJECT NO: 3617197453
ENGINEER: REM	SCALE: NOT APPLICABLE
CHECKED: RET	APPROVED: S. PEARSON
DATE: 10/04/19	DATE: 10/04/19

amec
AMEC E & E PC
214-25 42nd Ave
Bayside, New York 11361

LOCKHEED MARTIN CORPORATION,
FORMER UNISYS FACILITY,
LAKE SUCCESS, NEW YORK
OPERABLE UNITS NO. 1 & 2
EXTRACTION / RECOVERY WELL ELECTRICAL UPGRADES

ELECTRICAL
OU2
SINGLE LINE DIAGRAM
AND PANELBOARD SCHEDULE

E-611

C:\Users\roger.rigler\Wood PLC\Lockheed Martin Great Neck - R.A. Drawings\Rev Electrical Upgrade Design\Sheets\E-611.dwg Wed, 01 Sep 2021 - 1:35pm roger.rigler

UNAUTHORIZED ALTERATION OR ADDITION TO THIS DOCUMENT IS A VIOLATION OF SECTION 7209 OF THE NEW YORK STATE EDUCATION LAW.

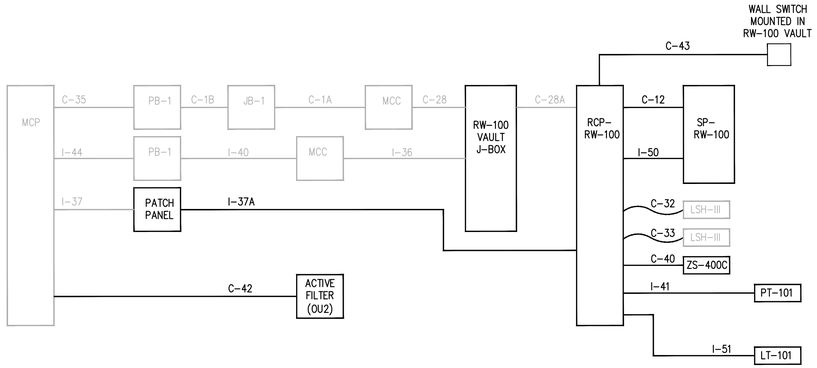

A E-612 CONTROL/INSTRUMENT RISER DIAGRAM

SCALE: NTS

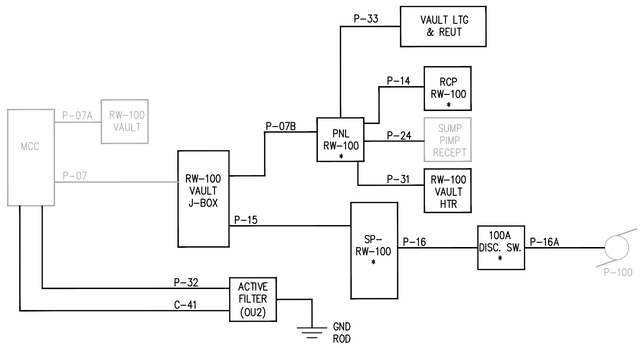

* 1" PVC CONDUIT W/ 1/C#2AWG GROUND WIRE RUNS TO ALL PANELS FROM RW-100 VAULT J-BOX.

B E-612 POWER RISER DIAGRAM

SCALE: NTS



THE SIGNATURE AND SEAL OF THE UNDERSIGNED ON THIS DRAWING CERTIFIES THAT THE DESIGN INFORMATION CONTAINED IN THESE DRAWINGS ACCURATELY REFLECTS THE ORIGINAL DESIGN AND THE MATERIAL DESIGN CHANGES MADE DURING CONSTRUCTION, THAT WERE BROUGHT TO THE UNDERSIGNED'S ATTENTION. THESE DRAWINGS ARE INTENDED TO INCORPORATE ADDENDA, CHANGE ORDERS AND OTHER MATERIAL DESIGN CHANGES, BUT NOT NECESSARILY ALL SITE INSTRUCTIONS. THE UNDERSIGNED DOES NOT WARRANT OR GUARANTEE, NOR ACCEPT ANY RESPONSIBILITY FOR THE ACCURACY OR COMPLETENESS OF THE CONSTRUCTION RECORD INFORMATION SUPPLIED BY OTHERS CONTAINED IN THESE DRAWINGS, BUT DOES CERTIFY THAT THE CONSTRUCTION RECORD INFORMATION, IF ACCURATE AND COMPLETE, PROVIDES A SYSTEM WHICH SUBSTANTIALLY COMPLIES IN ALL MATERIAL RESPECTS WITH THE ORIGINAL DESIGN INTENT."

NO.	DATE	REVISIONS	BY	CHK
	9/03/21	RECORD DRAWINGS	SCP	REM

DRAWN: NJG	PROJECT NO: 3617197453
ENGINEER: REM	SCALE: NOT APPLICABLE
CHECKED: SCP	APPROVED: S. PEARSON
DATE: 10/04/19	DATE: 10/04/19

amec
AMEC E & E PC
214-25 42nd Ave
Bayside, New York 11361

LOCKHEED MARTIN CORPORATION,
FORMER UNISYS FACILITY,
LAKE SUCCESS, NEW YORK
OPERABLE UNITS NO. 1 & 2
EXTRACTION / RECOVERY WELL ELECTRICAL UPGRADES

ELECTRICAL

OU2
WELL RW-100 POWER, CONTROL,
AND INSTRUMENTATION RISER DIAGRAM

E-612

C:\Users\roger.riguler\Wood PLC\Lockheed Martin Great Neck - 8.0_Drawings\Rev Electrical Upgrade Design\Sheets\E-612.dwg Wed, 01 Sep 2021 - 1:35pm roger.riguler

UNAUTHORIZED ALTERATION OR ADDITION TO THIS DOCUMENT IS A VIOLATION OF SECTION 7209 OF THE NEW YORK STATE EDUCATION LAW.

GREAT NECK OU2 GROUNDWATER TREATMENT SYSTEM CONDUIT/CONDUCTOR SCHEDULE

CONDUIT #	SIZE	CONDUIT TYPE	CONDUCTOR SIZE & TYPE	PURPOSE	RUN LOCATION (FROM)	RUN LOCATION (TO)
P-07	3"	PVC/R.G.S	(3) #1/0 + (1) #1/0 GND	RW-100 VAULT POWER FEED	NORTH MCC	RW-100 VAULT J-BOX
P-07A	3"	PVC	EMPTY	SPARE RW-100 VAULT POWER FEEDER CONDUIT	NORTH MCC	RW-100 VAULT J-BOX
P-07B	**2"**	**PVC**	**(3) #1/0 + (1) #1/0 GND**	**RW-100 VFD POWER FEED**	**RW-100 VAULT J-BOX**	**SP-RW-100**
P-14	3/4"	PVC	(2) #12 + (1) #12 GND	RCP-RW-100 POWER FEED	PNL-RW-100 CKT #7	RCP-RW-100
P-15	2"	PVC	(6) #2 + (2) #8 GND	RW-100 WELL PUMP VFD POWER FEED	RW-100 VAULT DSC-RW100	SP-RW-100
P-16	2"	PVC	(3) #2 + (1) #8 GND	RW-100 WELL PUMP POWER FEED	SP-RW-100 PANEL	RW-100 DISCONNECT SWITCH
P-16A	1 1/2"	PVC	(3) #2 + (1) #8 GND	RW-100 WELL PUMP POWER FEED	RW-100 DISCONNECT SWITCH	RW-100 PUMP MOTOR
P-24	3/4"	PVC	(2) #12 + (1) #12 GND	RW-100 SUMP PUMP RECEPTACLE	RW-100 SUMP TRANSFORMER	RW-100 SUMP PUMP RECEPT.
P-31	3/4"	PVC	(2) #12 + (1) #12 GND	RW-100 VAULT HEATER	PNL-RW-100 CKT #5	RW-100 VAULT HEATER
P-32	1 1/2"	RGS	(3) #1/0 + (1) #6 GND	ACTIVE FILTER POWER FEED	MCC 1B	ACTIVE FILTER
P-33	**1"**	**PVC**	**(4) #12 + (2) # 12 GND**	**VAULT LIGHTING AND RECEPTACLES**	**PNL-RW-100**	**VAULT LIGHTS & RECEPT**
CONDUIT #	**SIZE**	**CONDUIT TYPE**	**CONDUCTOR SIZE & TYPE**	**PURPOSE**	**RUN LOCATION (FROM)**	**RUN LOCATION (TO)**
C-1A	2"	EMT	(8) #10 + (1)#10GND, (16) #12 +(2) #12 GND, (31) # 14	CONTROL WIRING FROM TERMINATION BOX IN MCC ROOM TO JB-1	TERMINATION BOX IN MCC ROOM	JB-1
C-1B	2"	EMT	(8) #10 + (1)#10GND, (10) #12 +(1) #12 GND, (10) # 14	CONTROL WIRING BETWEEN JB-1 AND PB-1	JB-1	PB-1
C-12	3/4"	RGS W/PVC COAT	(10) #14 (2 SPARES)	MOTOR CONTROLS, E-STOP, INTRUSION	RCP-RW-100 PANEL	SP-RW-100 PANEL
C-28	2"	R.G.S	(8) #10	RW-100 VAULT LEVEL & PUMP CONTROL	RW-100 VAULT J-BOX	TERMINATION BOX IN MCC ROOM
C-28A	1"	PVC	(8) #10	RW-100 VAULT LEVEL & PUMP CONTROL	RW-100 VAULT J-BOX	RCP-RW-100
C-32	1"	CABLE/PVC	(3) #14 + (3) #14 GND CABLE	RW-100 VAULT HIGH LEVEL FLOAT	RW-100 RCP	LSH-111
C-33	1"	CABLE/PVC	(3) #14 + (3) #14 GND CABLE	RW-100 VAULT HIGH HIGH LEVEL FLOAT	RW-100 RCP	LSHH-111
C-35	2"	EMT	(8) #10 + (1) #10 GND, (30) #12, (21) #14	CONTROLS	PB-1	MCP
C-40	1"	RGS W/PVC COAT/LIQUIDTITE FLEX	(2) #14 + 1#14 GND	VAULT INTRUSION SWITCH	RW-100 RCP	ZS-400C
C-41	1"	RGS	(2) 1-PR TWSHLD #12 AWG CABLE	ACTIVE FILTER CT LEADS	MCC BUS	ACTIVE FILTER
C-42	**3/4"**	**RGS**	**(5) #14 AWG THWN**	**ACTIVE FILTER STATUS INFORMATION**	**MCP**	**ACTIVE FILTER**
C-43	**3/4"**	**PVC**	**(2) #14 AWG THWN**	**VFD MANUAL CONTROL SWITCH**	**SP-RW-100**	**WALL SW IN VAULT**
CONDUIT #	**SIZE**	**CONDUIT TYPE**	**CONDUCTOR SIZE & TYPE**	**PURPOSE**	**RUN LOCATION (FROM)**	**RUN LOCATION (TO)**
I-23	1"	R.G.S	(6) #20 TWISTED/SHIELDED PAIRS, (2) #14	INFLUENT VAULT INSTRUMENTATION	TERMINATION BOX IN MCC ROOM	JB-I7
I-25	3/4"	R.G.S./FLEX	(2) #20 TWISTED/SHIELDED PAIRS	INFLUENT VAULT WATER FLOW XMITTER FIT-131	JB-I7	FIT-131
I-36	2"	PVC/R.G.S	EMPTY	SPARE CONDUIT	TERMINATION BOX IN MCC ROOM	RW-100 VAULT
I-37	3"	PVC/R.G.S	FIBER OPTIC CABLE	RW-100 RCP COMMUNICATION WITH PLANT MAIN PLC	MCP	PATCH PANEL
I-37A	3/4"	R.G.S.	FIBER OPTIC PAIR OF CABLES	RW-100 RCP COMMUNICATION WITH PLANT MAIN PLC	PATCH PANEL	RCP-RW-100
I-40	2"	EMT	(39) 1-PR #18 TWISTED/SHIELDED PAIRS	SIGNALS FROM OLD TO NEW MCP LOCATION	TERMINATION BOX IN MCC ROOM	PB-1
I-41	1"	R.G.S.	(2) #20 TWISTED/SHIELDED PAIRS	RW-100 STRAINER PRESSURE TRANSMITTERS PT-101	RW-100 RCP	PT-101
I-44	2"	EMT	(49) #18 TWISTED/SHIELDED PAIRS	SIGNALS FROM PB-1	MCP	PB-1
I-50	3/4"	PVC	CAT 5e ETHERNET CABLE	COMMUNICATION WITH VFD	RCP-RW-100	SP-RW-100
I-51	**3/4"**	**PVC**	**1 PR #18 TWISTED/SHIELDED PAIR**	**RW-100 WELL LEVEL TRANSMITTER**	**LT-101**	**RCP-RW-100**

C:\Users\roger.rigler\Wood PLC\Lockheed Martin Great Neck - R.A. Drawings\Rev. Electrical Upgrade Design\Sheets\E-615.dwg Wed, 01 Sep 2021 - 1:36pm roger.rigler

JITENDRA M. PATEL
STATE OF NEW YORK
075437
LICENSED PROFESSIONAL ENGINEER
9/1/21

jitu.patel Digitally signed by jitu.patel DN: CN=jitu.patel Date: 2021.09.01 17:22:19-04'00'

THE SIGNATURE AND SEAL OF THE UNDERSIGNED ON THIS DRAWING CERTIFIES THAT THE DESIGN INFORMATION CONTAINED IN THESE DRAWINGS ACCURATELY REFLECTS THE ORIGINAL DESIGN AND THE MATERIAL DESIGN CHANGES MADE DURING CONSTRUCTION, THAT WERE BROUGHT TO THE UNDERSIGNED'S ATTENTION. THESE DRAWINGS ARE INTENDED TO INCORPORATE ADDENDA, CHANGE ORDERS AND OTHER MATERIAL DESIGN CHANGES, BUT NOT NECESSARILY ALL SITE INSTRUCTIONS. THE UNDERSIGNED DOES NOT WARRANT OR GUARANTEE, NOR ACCEPT ANY RESPONSIBILITY FOR THE ACCURACY OR COMPLETENESS OF THE CONSTRUCTION RECORD INFORMATION SUPPLIED BY OTHERS CONTAINED IN THESE DRAWINGS, BUT DOES CERTIFY THAT THE CONSTRUCTION RECORD INFORMATION, IF ACCURATE AND COMPLETE, PROVIDES A SYSTEM WHICH SUBSTANTIALLY COMPLIES IN ALL MATERIAL RESPECTS WITH THE ORIGINAL DESIGN INTENT."

NO.	DATE	REVISIONS	BY	CHK
	9/03/21	RECORD DRAWINGS	SCP	REM

DRAWN: NJG	PROJECT NO: 3617197453
ENGINEER: REM	SCALE: NOT APPLICABLE
CHECKED: SCP	APPROVED: S. PEARSON
DATE: 10/04/19	DATE: 10/04/19

amec
AMEC E & E PC
214-25 42nd Ave
Bayside, New York 11361

LOCKHEED MARTIN CORPORATION,
FORMER UNISYS FACILITY,
LAKE SUCCESS, NEW YORK
OPERABLE UNITS NO. 1 & 2
EXTRACTION / RECOVERY WELL ELECTRICAL UPGRADES

ELECTRICAL
OU2
WELL RW-100
CABLE SCHEDULE

E-615

UNAUTHORIZED ALTERATION OR ADDITION TO THIS DOCUMENT IS A VIOLATION OF SECTION 7209 OF THE NEW YORK STATE EDUCATION LAW.

ABBREVIATIONS:

AWG	AMERICAN WIRE GAUGE
C–X	CONTROL CONDUIT
CKT	CIRCUIT
G	REMOTE CONTROL PANEL
GFCI	GROUND FAULT CIRCUIT INTERRUPTER
GWTS	GROUND WATER TREATMENT SYSTEM
HCP	HEATER CONTROL PANEL
I–X	INSTRUMENTATION CONDUIT
MCC	MOTOR CONTROL CENTER
M.C.P.	MOTOR CIRCUIT PROTECTOR(S)
MCP	MAIN CONTROL PANEL
OU1	OPERATING UNIT NUMBER 1
OU2	OPERATING UNIT NUMBER 2
P–X	POWER CONDUIT (480 OR 120/240)
PNL	PANEL
PVC	POLYVINYL CHLORIDE
RCP	REMOTE CONTROL PANEL
RGS	RIGID GALVANIZED STEEL
RW–X	RAW WATER X–INDICATES WELL DESIGNATION
S.N.	SERVICE NEUTRAL
SSDS	SUB–SLAD DEPRESSURIZATION SYSTEM
TM	THERMAL–MAGNETIC
WP	WEATHER PROOF

GENERAL LEGEND:


THERMAL MAGNETIC CIRCUIT BREAKER



FUSE

TERMINAL BLOCK (MCP–100) PANEL

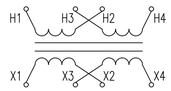

TRANSFORMER



EXISTING TERMINAL BLOCK (RW–100) PANEL


DISTRIBUTION BLOCK



CONTACTOR / CONTROL RELAY COIL



OPERATOR/PILOT LIGHT



3 POSITION SELECTOR SWITCH


PUSHBUTTON OPERATOR (N/O)


PUSHBUTTON OPERATOR (N/C)


N/O CONTACT


N/C CONTACT


120VAC RECEPTACLE


RJ45 (ETHERNET) CONNECTION


PRESSURE SWITCH (OPENS ON LOW PRESSURE)


LEVEL SWITCH (CLOSES ON HIGH LEVEL)


TEMPERATURE SWITCH (OPENS ON HIGH TEMP)


FLOW SWITCH (CLOSES ON FLOW)

GENERAL NOTES:

1. ALL CONDUITS ENTERING OR LEAVING AN ELECTRICAL PANEL OR DEVICE SHALL BE SEALED WITH NON–HARDENING ELECTRICIAN PUTTY COMPATIBLE WITH CABLE INSULATION TO PREVENT MOISTURE INTRUSION.
2. THE PANEL DRAWINGS, SCHEMATICS, AND BILLS OF MATERIALS ILLUSTRATE DESIGN INTENT. IT IS THE CONTRACTOR'S RESPONSIBILITY TO THOROUGHLY REVIEW, VERIFY FUNCTIONALITY, AND PROVIDE THEIR OWN FINAL DRAWINGS AS PART OF SUBMITTALS. THE CONTRACTOR IS RESPONSIBLE TO PROVIDE A FULLY FUNCTIONAL SYSTEM.
3. RECORD DRAWINGS INFORMATION ON SHEETS EI–600 TO EI–697 PROVIDED BY EAGLE CONTROL CORP. DRAWINGS D1026–01 TO D1026–38.



THE SIGNATURE AND SEAL OF THE UNDERSIGNED ON THIS DRAWING CERTIFIES THAT THE DESIGN INFORMATION CONTAINED IN THESE DRAWINGS ACCURATELY REFLECTS THE ORIGINAL DESIGN AND THE MATERIAL DESIGN CHANGES MADE DURING CONSTRUCTION, THAT WERE BROUGHT TO THE UNDERSIGNED'S ATTENTION. THESE DRAWINGS ARE INTENDED TO INCORPORATE ADDENDA, CHANGE ORDERS AND OTHER MATERIAL DESIGN CHANGES, BUT NOT NECESSARILY ALL SITE INSTRUCTIONS. THE UNDERSIGNED DOES NOT WARRANT OR GUARANTEE, NOR ACCEPT ANY RESPONSIBILITY FOR THE ACCURACY OR COMPLETENESS OF THE CONSTRUCTION RECORD INFORMATION SUPPLIED BY OTHERS CONTAINED IN THESE DRAWINGS, BUT DOES CERTIFY THAT THE CONSTRUCTION RECORD INFORMATION, IF ACCURATE AND COMPLETE, PROVIDES A SYSTEM WHICH SUBSTANTIALLY COMPLIES IN ALL MATERIAL RESPECTS WITH THE ORIGINAL DESIGN INTENT."

NO.	DATE	REVISIONS	BY	CHK
	9/03/21	RECORD DRAWINGS	SCP	REM

DRAWN: NJG	PROJECT NO: 3617197453
ENGINEER: REM	SCALE: NOT APPLICABLE
CHECKED: SCP	APPROVED: S. PEARSON
DATE: 10/04/19	DATE:

amec
AMEC E & E PC
214-25 42nd Ave
Bayside, New York 11361

LOCKHEED MARTIN CORPORATION,
FORMER UNISYS FACILITY,
LAKE SUCCESS, NEW YORK
OPERABLE UNITS NO. 1 & 2
EXTRACTION / RECOVERY WELL ELECTRICAL UPGRADES

INSTRUMENTATION

INSTRUMENTATION LEGEND,
ABBREVIATIONS, AND GENERAL NOTES

EI-001

C:\Users\roger.riquier\Wood PLC\Lockheed Martin Great Neck - R.A. Drawings\Rev. Electrical Upgrade Design\Sheets\EI-001.dwg Wed, 01 Sep 2021 - 1:36pm roger.riquier

UNAUTHORIZED ALTERATION OR ADDITION TO THIS DOCUMENT IS A VIOLATION OF SECTION 7209 OF THE NEW YORK STATE EDUCATION LAW.

NOTES:

1. SEE SHEET EI-001 FOR LEGEND, ABBREVIATIONS, AND GENERAL NOTES.
2. REPLACED ETHERNET SWITCHES & MEDIA CONVERTERS

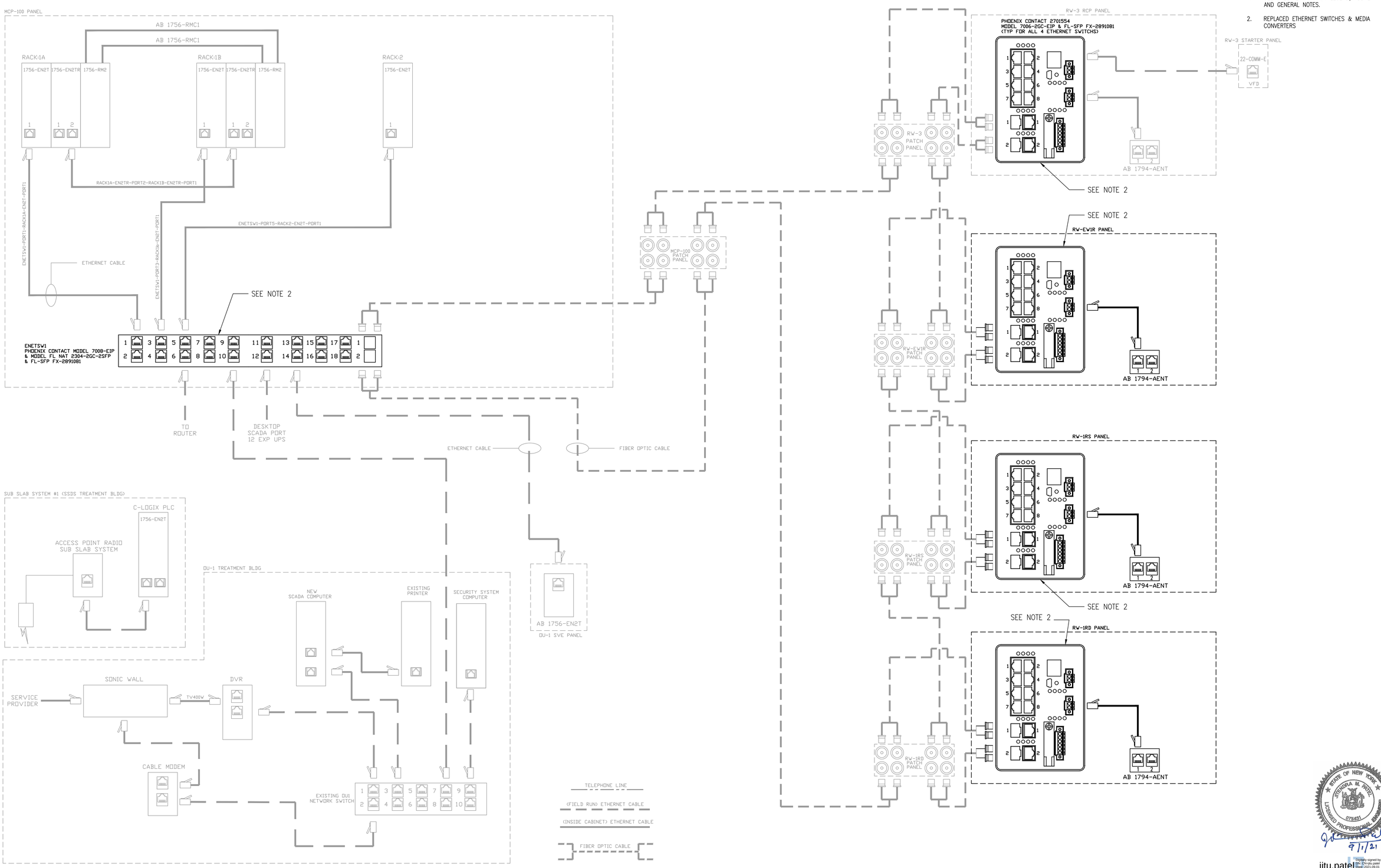



jitu.patel Digitally signed by jitu.patel DN: CN=jitu.patel Date: 2021.09.01 17:22:53-04'00'

THE SIGNATURE AND SEAL OF THE UNDERSIGNED ON THIS DRAWING CERTIFIES THAT THE DESIGN INFORMATION CONTAINED IN THESE DRAWINGS ACCURATELY REFLECTS THE ORIGINAL DESIGN AND THE MATERIAL DESIGN CHANGES MADE DURING CONSTRUCTION, THAT WERE BROUGHT TO THE UNDERSIGNED'S ATTENTION. THESE DRAWINGS ARE INTENDED TO INCORPORATE ADDENDA, CHANGE ORDERS AND OTHER MATERIAL DESIGN CHANGES, BUT NOT NECESSARILY ALL SITE INSTRUCTIONS. THE UNDERSIGNED DOES NOT WARRANT OR GUARANTEE, NOR ACCEPT ANY RESPONSIBILITY FOR THE ACCURACY OR COMPLETENESS OF THE CONSTRUCTION RECORD INFORMATION SUPPLIED BY OTHERS CONTAINED IN THESE DRAWINGS, BUT DOES CERTIFY THAT THE CONSTRUCTION RECORD INFORMATION, IF ACCURATE AND COMPLETE, PROVIDES A SYSTEM WHICH SUBSTANTIALLY COMPLIES IN ALL MATERIAL RESPECTS WITH THE ORIGINAL DESIGN INTENT."

NO.	DATE	REVISIONS	BY	CHK
	9/03/21	RECORD DRAWINGS	SCP	REM

DRAWN: AJF	PROJECT NO: 3617197453
ENGINEER: REM	SCALE: NOT APPLICABLE
CHECKED: SCP	APPROVED: S.PEARSON
DATE: 10/04/19	DATE:

amec
AMEC E & E PC
214-25 42nd Ave
Bayside, New York 11361

LOCKHEED MARTIN CORPORATION,
FORMER UNISYS FACILITY,
LAKE SUCCESS, NEW YORK
OPERABLE UNITS NO. 1 & 2
EXTRACTION / RECOVERY WELL ELECTRICAL UPGRADES

INSTRUMENTATION
INSTRUMENTATION NETWORK SCHEMATIC
PROCESS AND INSTRUMENTATION DIAGRAM
SYSTEM ARCHITECTURE

EI-101

C:\Users\roger.riquier\Wood PLC\Lockheed Martin Great Neck - 8.0_Drawings\Rev Electrical Upgrade Design\Sheets\EI-101.dwg Wed, 01 Sep 2021 - 1:36pm roger.riquier

UNAUTHORIZED ALTERATION OR ADDITION TO THIS DOCUMENT IS A VIOLATION OF SECTION 7209 OF THE NEW YORK STATE EDUCATION LAW.

NOTE:

1. SEE SHEET EI-001 FOR LEGEND, ABBREVIATIONS, AND GENERAL NOTES.

OU1 TREATMENT BUILDING CONTROL ROOM

SCADA OPERATOR WORKSTATION
DELL LED DISPLAY
OPER#1
LOCATION: OU1 TREATMENT BLDG
PROCESS: SVE & GWTS
FUNCTION: DISPLAY
SOFTWARE: FACTORY TALK
IP: XXX.XXX.XXX.XXX

PRINTER
PNTR#1
LOCATION: OU1 TREATMENT BLDG
BLDG: SVE & GWTS
FUNCTION: PRINTING
IP: XXX.XXX.XXX.XXX

FROM CCTV CAMERAS
DIGITAL VIDEO RECORDER

SECURITY SYSTEM
17" VIEWSONIC DISPLAY
SECURITY
LOCATION: OU1 TREATMENT BLDG
BLDG: SVE & GWTS

LAN-3
USB
E-NET

OU1 MAIN CONTROL PANEL (MCP - 100)

Rack 1A
OU-1 GWTS PRIMARY CONTROLLOGIX PLC
1: 1756-L71
2: 1756-EN2T
3: 1756-EN2TR
4: 1756-RM2

Rack 1B
OU-1 GWTS SECONDARY CONTROLLOGIX PLC
1: 1756-L71
2: 1756-EN2T
3: 1756-EN2TR
4: 1756-RM2

Rack #2
0: 1756-EN2T
1: 1756-IA16I
2: 1756-IA16I
3: 1756-IA16I
4: 1756-IA16I
5: 1756-OW16I
6: 1756-OW16I
7: 1756-OW16I
8: 1756-OW16I
9: 1756-IF16
10: 1756-IF16
11: 1756-IF16
12: 1756-IF16
13: 1756-OF6CI
14: 1756-OF6CI
15: 1756-DHRIO
16:

FO
E-NET
LAN-3
T

DIALOG ELITE AUTODIALER

STRATIX SWITCH 1783-BMS20CGN
20 PORT MANAGED E-NET SWITCH
WITH 2 FIBER PORTS
DLR NETWORK CAPABLE
I/O NETWORK SWITCH

CABLE MODEM
INTERNET SERVICE PROVIDER (OPTIMUM ONLINE)
SONICWALL (VPN)
ETHERNET SWITCH
DNS TRACKING SERVICE (REMOTE MONITORING / CONTROL)

NOT IN USE

ACCESS POINT RADIO
ACCESS POINT RADIO
SUB-SLAB DEPRESSURIZATION SYSTEM #1 (SSDS TREATMENT BUILDING)
SSDS CONTROLLOGIX PLC

OU1 PIPELINE CONTROL PANEL

TERMINAL BLOCK

OU1 SECONDARY CONTROL PANEL

TERMINAL BLOCK

3 PAIR FIBER CABLE.

RW-1RD

FLEX I/O
E-NETSW W/FIBER
* REPLACED

RW-1RS

FLEX I/O
E-NETSW W/FIBER
* REPLACED

RW-EW-1

FLEX I/O
PATCH PANEL
E-NETSW W/FIBER
* REPLACED

RW-3

VFD
FLEX I/O
PATCH PANEL
E-NETSW W/FIBER
* REPLACED

3/4"C(4-2/C#16TSP) EACH.

PUMP (P-100,200) VIBRATION SENSORS
BLOWER (B-320) VIBRATION SENSORS

OU1 SOIL VAPOR EXTRACTION (SVE PANEL)

SVE CONTROLLOGIX PLC
Rack 1A
0: 1756-L73
1: 1756-EN2T
2
3
4
5
6

STATE OF NEW YORK
JITENDRA M. PATEL
075431
LICENSED PROFESSIONAL ENGINEER
9/1/21
jitu.patel Digitally signed by jitu.patel DN: CN=jitu.patel Date: 2021.09.01 17:23:13-04'00'

THE SIGNATURE AND SEAL OF THE UNDERSIGNED ON THIS DRAWING CERTIFIES THAT THE DESIGN INFORMATION CONTAINED IN THESE DRAWINGS ACCURATELY REFLECTS THE ORIGINAL DESIGN AND THE MATERIAL DESIGN CHANGES MADE DURING CONSTRUCTION, THAT WERE BROUGHT TO THE UNDERSIGNED'S ATTENTION. THESE DRAWINGS ARE INTENDED TO INCORPORATE ADDENDA, CHANGE ORDERS AND OTHER MATERIAL DESIGN CHANGES, BUT NOT NECESSARILY ALL SITE INSTRUCTIONS. THE UNDERSIGNED DOES NOT WARRANT OR GUARANTEE, NOR ACCEPT ANY RESPONSIBILITY FOR THE ACCURACY OR COMPLETENESS OF THE CONSTRUCTION RECORD INFORMATION SUPPLIED BY OTHERS CONTAINED IN THESE DRAWINGS, BUT DOES CERTIFY THAT THE CONSTRUCTION RECORD INFORMATION, IF ACCURATE AND COMPLETE, PROVIDES A SYSTEM WHICH SUBSTANTIALLY COMPLIES IN ALL MATERIAL RESPECTS WITH THE ORIGINAL DESIGN INTENT."

NO.	DATE	REVISIONS	BY	CHK
	9/03/21	RECORD DRAWINGS	SCP	REM

DRAWN: NJG
ENGINEER: SCP
CHECKED: REM
DATE: 10/04/19
PROJECT NO: 3617197453
SCALE: NOT APPLICABLE
APPROVED: S. PEARSON
DATE:

amec
AMEC E & E PC
214-25 42nd Ave
Bayside, New York 11361

LOCKHEED MARTIN CORPORATION,
FORMER UNISYS FACILITY,
LAKE SUCCESS, NEW YORK
OPERABLE UNITS NO. 1 & 2
EXTRACTION / RECOVERY WELL ELECTRICAL UPGRADES

INSTRUMENTATION

OU1
SYSTEM ARCHITECTURE

EI-600

C:\Users\roger.rigular\Wood PLC\Lockheed Martin Great Neck - 8.0_Drawings\Rev Electrical Upgrade Design\Sheets\EI-600.dwg Wed, 01 Sep 2021 - 1:36pm roger.rigular

UNAUTHORIZED ALTERATION OR ADDITION TO THIS DOCUMENT IS A VIOLATION OF SECTION 7209 OF THE NEW YORK STATE EDUCATION LAW.

NOTE:

1. SEE SHEET EI-001 FOR LEGEND, ABBREVIATIONS, AND GENERAL NOTES.

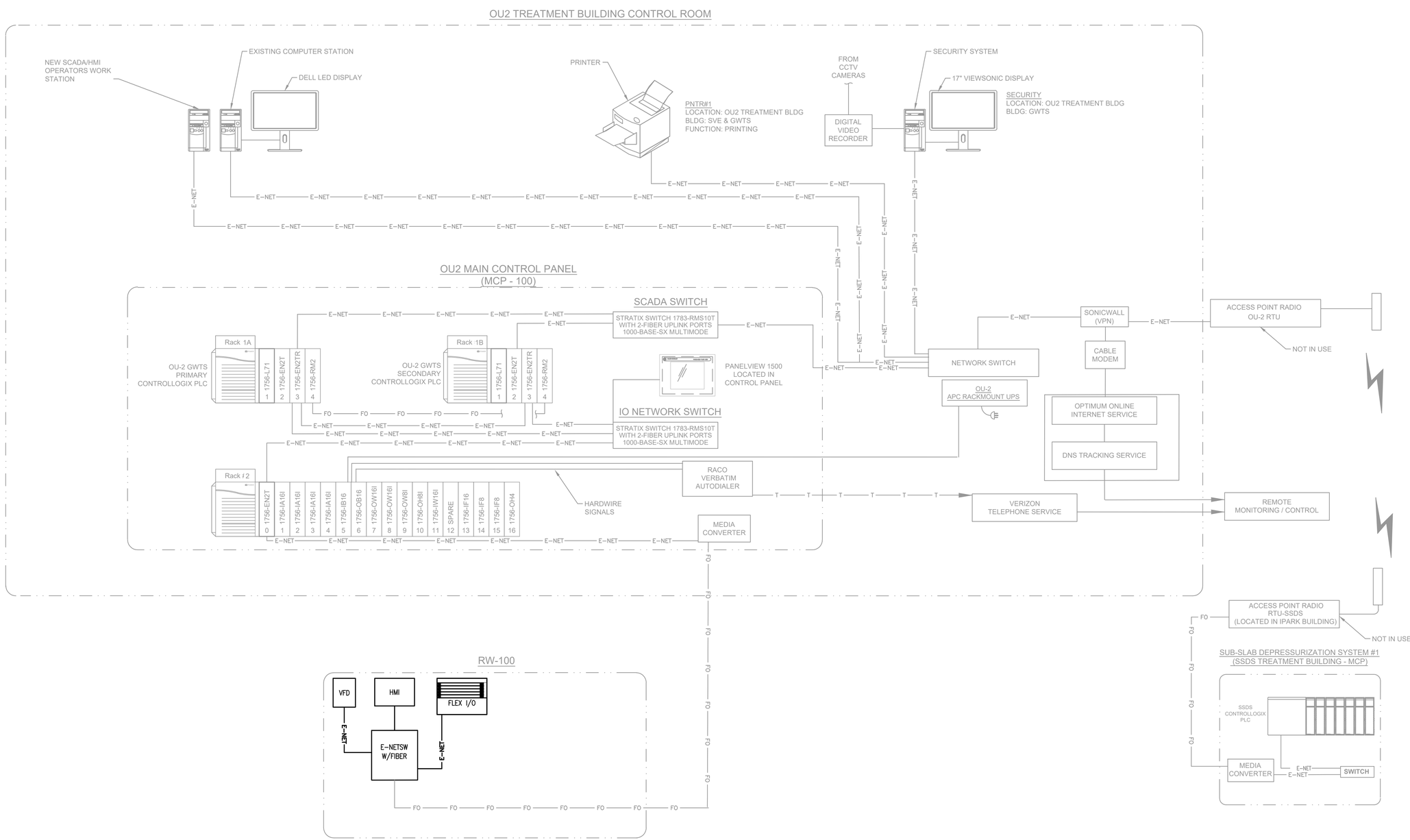

jitu.patel Digitally signed by jitu.patel DN: CN=jitu.patel Date: 2021.09.01 17:24:00-04'00'

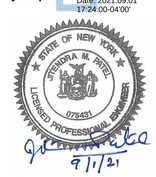

THE SIGNATURE AND SEAL OF THE UNDERSIGNED ON THIS DRAWING CERTIFIES THAT THE DESIGN INFORMATION CONTAINED IN THESE DRAWINGS ACCURATELY REFLECTS THE ORIGINAL DESIGN AND THE MATERIAL DESIGN CHANGES MADE DURING CONSTRUCTION, THAT WERE BROUGHT TO THE UNDERSIGNED'S ATTENTION. THESE DRAWINGS ARE INTENDED TO INCORPORATE ADDENDA, CHANGE ORDERS AND OTHER MATERIAL DESIGN CHANGES, BUT NOT NECESSARILY ALL SITE INSTRUCTIONS. THE UNDERSIGNED DOES NOT WARRANT OR GUARANTEE, NOR ACCEPT ANY RESPONSIBILITY FOR THE ACCURACY OR COMPLETENESS OF THE CONSTRUCTION RECORD INFORMATION SUPPLIED BY OTHERS CONTAINED IN THESE DRAWINGS, BUT DOES CERTIFY THAT THE CONSTRUCTION RECORD INFORMATION, IF ACCURATE AND COMPLETE, PROVIDES A SYSTEM WHICH SUBSTANTIALLY COMPLIES IN ALL MATERIAL RESPECTS WITH THE ORIGINAL DESIGN INTENT."

NO.	DATE	REVISIONS	BY	CHK
	9/03/21	RECORD DRAWINGS	SCP	REM

DRAWN: NJG	PROJECT NO: 3617197453
ENGINEER: SCP	SCALE: NOT APPLICABLE
CHECKED: REM	APPROVED: S. PEARSON
DATE: 10/04/19	DATE:

amec
AMEC E & E PC
214-25 42nd Ave
Bayside, New York 11361

LOCKHEED MARTIN CORPORATION,
FORMER UNISYS FACILITY,
LAKE SUCCESS, NEW YORK
OPERABLE UNITS NO. 1 & 2
EXTRACTION / RECOVERY WELL ELECTRICAL UPGRADES

INSTRUMENTATION

OU2
SYSTEM ARCHITECTURE

EI-601

C:\Users\roger.riquier\Wood PLC\Lockheed Martin Great Neck - 8.0_Drawings\Rev Electrical Upgrade Design\Sheets\EI-601.dwg Wed, 01 Sep 2021 - 1:36pm roger.riquier

UNAUTHORIZED ALTERATION OR ADDITION TO THIS DOCUMENT IS A VIOLATION OF SECTION 7209 OF THE NEW YORK STATE EDUCATION LAW.

NOTES:

1. SEE SHEET EI-001 FOR LEGEND, ABBREVIATIONS, AND GENERAL NOTES.
2. REPLACED ETHERNET SWITCHES & MEDIA CONVERTERS

Item	Qty	Manufacturer	Part Number	Description	Device
1	1	Saginaw	SCE-726018FSD	72" x 60" x 18", Nema 12 Enclosure	
2	1	Saginaw	SCE-72P60F1	Sub Panel	
3	1	Saginaw	SCE-72SMP14	Side Sub Panel (Mounted on Right Side)	
4	1	Saginaw	SCE-72FSCS	Center Support	
5	1	Hoffman	HF0916514	115VAC, 8" Fan, .16 Amps	FAN212
6	1	Hoffman	HG0900504	Exhaust Grille	
7	1	Allen Bradley	800FM-MT44	Red, 40mm E-Stop Pushbutton	E-STOP
8	1	Allen Bradley	800F-ALM	Metal latch	E-STOP
9	1	Allen Bradley	800F-X01	1 NC Contact	E-STOP
10	1	Allen Bradley	800F-X10	1 NO Contact	E-STOP
11	1	Allen Bradley	2711P-T15C22A9P	Panelview Plus 7, 15" Touchscreen, 120VAC Power	HMI
12	9	Mersen	STP1201PGM	120VAC, L-N, TVSS	TVSS1 thru TVSS9
13	3	Allen Bradley	1756-PA75	Control Logix, Power Supply	RACK1A, 1B, 2
14	2	Allen Bradley	1756-RM2	Control Logix, Enhanced Redundancy Module	RACK 1A, 1B
15	2	Allen Bradley	1756-EN2TR	Control Logix, Ethernet Redundant Interface Module	RACK 1A, 1B
16	2	Allen Bradley	1756-L71	Control Logix, L71 Processor	RACK 1A, 1B
17	3	Allen Bradley	1756-EN2T	Control Logix, Ethernet Bridge Module	RACK 1A, 1B, 2
18	6	Allen Bradley	1756-IA16	Control Logix, 120VAC Input Module	SLOTS 1, 2, 3, 4, 7, 8
19	3	Allen Bradley	1756-OW16I	Control Logix, Relay Isolated Output Module	SLOTS 5, 6, 9
20	2	Allen Bradley	1756-IF16	Control Logix, 16 Point Analog Input Module	SLOTS 10, 11
21	1	Allen Bradley	1756-OF8	Control Logix, 8 Point Analog Output Module	SLOT 12
22	7	Allen Bradley	1756-TBCH	Control Logix, Wiring Arm	SLOTS 1, 2, 3, 4, 5, 6, 7
23	3	Allen Bradley	1756-TBNH	Control Logix, Wiring Arm	SLOTS 9, 10, 11
24	2	Allen Bradley	1756-RMC1	Control Logix, Redundancy Cables	RACK1A, 1B
25	2	Allen Bradley	1756-N2	Control Logix, Filler Module	SLOTS 8, 12
26	**1**	**Phoenix Contact**	**FL-7008-EIP**	**8 Port Managed Ethernet Switch W/ Fiber Ports**	**ENETSW1**
27	**2**	**Allen Bradley**	**FL-SFP-FX-2891081**	**Fiber transceiver Cartridge**	**ENETSW1**
28	**1**	**Allen Bradley**	**FL-NAT-2304-2GC-2SFP**	**10 Port Managed Ethernet Switch**	**ENETSW1**
29	1	Allen Bradley	1606-XLS240E	24VDC, Power Supply, 10A	PS1
30	1	APC	SMT1500	Uninterruptable Power Supply, 1500VA	UPS1
31	1	APC	AP9631	Remote Montiring Card	UPS1
32	1	Allen Bradley	1756-A13	Control Logix, 13 Slot Chassis	RACK 2
33	2	Allen Bradley	1756-A4	Control Logix, 4 Slot Chassis	RACK1A, 1B
34	1	Sola	STV25K-10S	Surge Protector	LF129
35	1	Allen Bradley	1489-M1C200	1P, 20 Amp, UL489 Circuit Breaker	CB102
36	2	Allen Bradley	1492-SPM1C010	1P, 1 Amp, UL489 Circuit Breaker	CB212, CB214
37	4	Allen Bradley	1492-SPM1C020	1P, 2 Amp, UL489 Circuit Breaker	CB124, CB131, CB183, CB243
38	5	Allen Bradley	1492-SPM1C030	1P, 3 Amp, UL489 Circuit Breaker	CB139, CB203, CB208, CB306, CB319
39	3	Allen Bradley	1492-SPM1C050	1P, 5 Amp, UL489 Circuit Breaker	CB143, CB145, CB303
40	2	Allen Bradley	1492-SPM1C100	1P, 10 Amp, UL489 Circuit Breaker	CB172, CB174
41	20	Allen Bradley	1492-J3	Single Level Terminal	
42	5	Allen Bradley	1492-JG3	GND Terminal	
43	200	Allen Bradley	1492-JD3	2 Level Terminal	
44	30	Allen Bradley	1492-JDG3C	2 Level GND Terminal	
45	5	Allen Bradley	1492-JD3FB	2 Level Fuse Terminal	
46	25	Allen Bradley	1492-EAJ35	End Clamp	
47	2	Phoenix	56 00 46 1	15A, Din Rail Mounted Outlet	PANEL RECEP, SCADA RECEP
48	2	Hoffman	LEDA2M35	Enclosure Light Kit	LT214, LT216
49	10	Allen Bradley	1492-DR6	Raised Din Rail	
50	6	SSAC	LLC44AA	Conductivity Switch Amplifier	C1HH, C2HH, C1H, C1N, C2H C2N
51	4	SSAC	LLC44BSA	Conductivity Switch Amplifier	C1LL, C2LL, C1L, C2L
52	10	SSAC	NDS-8	Relay Base	C1HH, C2HH, C1H, C1N, C2H C2N, C1LL, C2LL, C1L, C2L
53	2	Allen Bradley	100-C12D10	3P, 12 Amp Contactor, 120VAC Coil	C108, C170
54	11	Allen Bradley	800T-J2A	3 Position Selector, 1NO, 1NC	UPS, SS1403, SS1414, SS1425, SS1443, SS1454, SS1465, SS1503, SS1514, SS1522, SS1531
55	10	Allen Bradley	800T-XD1	NO Contact Block	SS1403, SS1414, SS1425, SS1443, SS1454, SS1465, SS1503, SS1514, SS1522, SS1531
56	1	Allen Bradley	800H-QRTH2W	White, PTT, Pilot Light, LED	LT122
57	12	Allen Bradley	800H-QRTH2G	Green, PTT, Pilot Light, LED	LT775, LT778, LT1406, LT1417, LT1428, LT1446, LT1457, LT1468, LT1506, LT1517, LT1525, LT1534
58	25	Allen Bradley	800H-QRTH2R	Red, PTT, Pilot Light, LED	LT768, LT769, LT770, LT772, LT773, LT774, LT776, LT777, LT844, LT845, LT847, LT1408, LT1410, LT1419, LT1421, LT1430, LT1432, LT1448, LT1450, LT1459, LT1470, LT1508, LT1518, LT1525, LT1539
59	2	Allen Bradley	800H-QRTH2A	Amber, PTT, Pilot Light, LED	LT843, LT846
60	8	Allen Bradley	700-FSA4UU23	On Delay, Timer, 120VAC	TR1401, TR1413, TR1424, TR1442, TR1453, TR1464, TR1501, TR1513
61	40	Allen Bradley	700-HF34A1	4P, 120VAC, 10A Control relay	CR603, CR605, CR606, CR609, CR610, CR611, CR612, CR624, CR625, CR626, CR627, CR628, CR629, CR630, CR631, CR632, CR633, CR634, CR635, CR636, CR637, CR638, CR639, CR763, CR764, CR765, CR1403, CR1414, CR1425, CR1443, CR1454, CR1465, CR1503, CR1514, CR1522, C
62	10	Allen Bradley	700-HF34Z24	4P, 24VDC, 10A Control relay	CR321, CR324, CR331, CR334, CR344, CR347, CR354, CR364, CR367, CR374
63	4	Allen Bradley	700-HLT1U1	1PDT, 120VAC, Control Relay	CR853, 854, 855, 856
64	3	Cutler Hammer	M22-IVS	1 Hole, Din Mount, Switch Holder	Rack1A, 1B, 2
65	54	Allen Bradley	700-HN139	4P, Relay Base	ALL CR'S
66	30	Panduit	F3X4LG6	3" x 4" Gray Wireway	
67	30	Panduit	C3LG6	3" Gray Wireway Cover	
68	6	Panduit	F4X4LG6	4" x 4" Gray Wireway	
69	6	Panduit	C4LG6	4" Gray Wireway Cover	
70	1	Saginaw	SCE-TEMNO	Thermostat w/1NO Contact	TS212

SEE NOTE 2



THE SIGNATURE AND SEAL OF THE UNDERSIGNED ON THIS DRAWING CERTIFIES THAT THE DESIGN INFORMATION CONTAINED IN THESE DRAWINGS ACCURATELY REFLECTS THE ORIGINAL DESIGN AND THE MATERIAL DESIGN CHANGES MADE DURING CONSTRUCTION, THAT WERE BROUGHT TO THE UNDERSIGNED'S ATTENTION. THESE DRAWINGS ARE INTENDED TO INCORPORATE ADDENDA, CHANGE ORDERS AND OTHER MATERIAL DESIGN CHANGES, BUT NOT NECESSARILY ALL SITE INSTRUCTIONS. THE UNDERSIGNED DOES NOT WARRANT OR GUARANTEE, NOR ACCEPT ANY RESPONSIBILITY FOR THE ACCURACY OR COMPLETENESS OF THE CONSTRUCTION RECORD INFORMATION SUPPLIED BY OTHERS CONTAINED IN THESE DRAWINGS, BUT DOES CERTIFY THAT THE CONSTRUCTION RECORD INFORMATION, IF ACCURATE AND COMPLETE, PROVIDES A SYSTEM WHICH SUBSTANTIALLY COMPLIES IN ALL MATERIAL RESPECTS WITH THE ORIGINAL DESIGN INTENT."

NO.	DATE	REVISIONS	BY	CHK
	9/03/21	RECORD DRAWINGS	SCP	REM

DRAWN: AJF
ENGINEER: REM
CHECKED: SCP
DATE: 10/04/19
PROJECT NO: 3617187453
SCALE: NOT APPLICABLE
APPROVED: S.PEARSON
DATE:

AMEC E & E PC
214-25 42nd Ave
Bayside, New York 11361

LOCKHEED MARTIN CORPORATION,
FORMER UNISYS FACILITY,
LAKE SUCCESS, NEW YORK
OPERABLE UNITS NO. 1 & 2
EXTRACTION / RECOVERY WELL ELECTRICAL UPGRADES

INSTRUMENTATION

MCP-100
BILL OF MATERIALS

EI-603

C:\Users\roger.rigulet\Wood PLC\Lockheed Martin Great Neck - 8.0_Drawings\Rev Electrical Upgrade Design\Sheets\EI-603.dwg Wed, 01 Sep 2021 - 1:36pm roger.rigulet

UNAUTHORIZED ALTERATION OR ADDITION TO THIS DOCUMENT IS A VIOLATION OF SECTION 7209 OF THE NEW YORK STATE EDUCATION LAW.

NOTES:

1. SEE SHEET EI-001 FOR LEGEND, ABBREVIATIONS, AND GENERAL NOTES.
2. REPLACED ETHERNET SWITCHES & MEDIA CONVERTERS

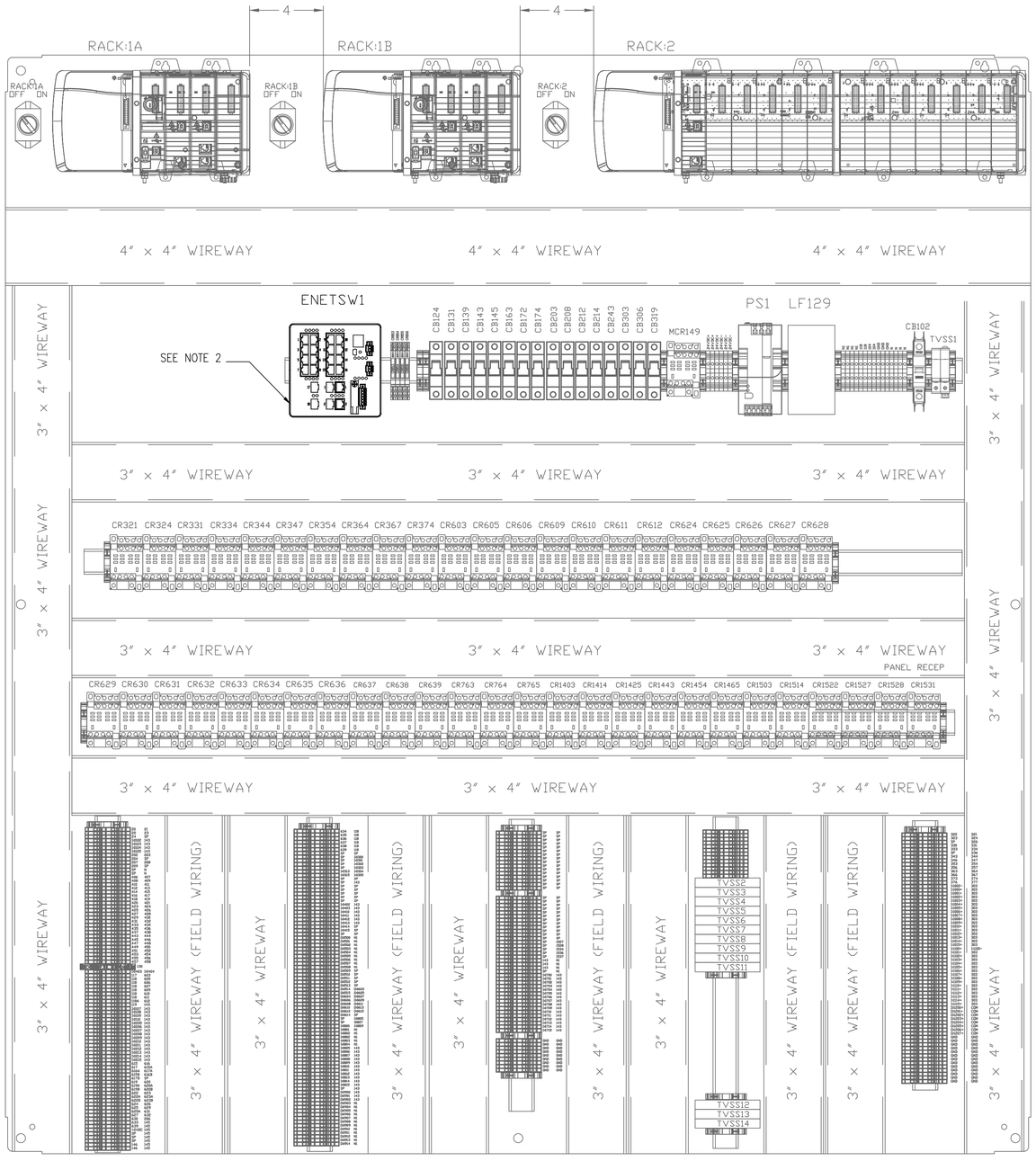

SAGINAW SCE-72P60F1 SUB PANEL

MOUNTED ON RIGHT SIDE OF CABINET

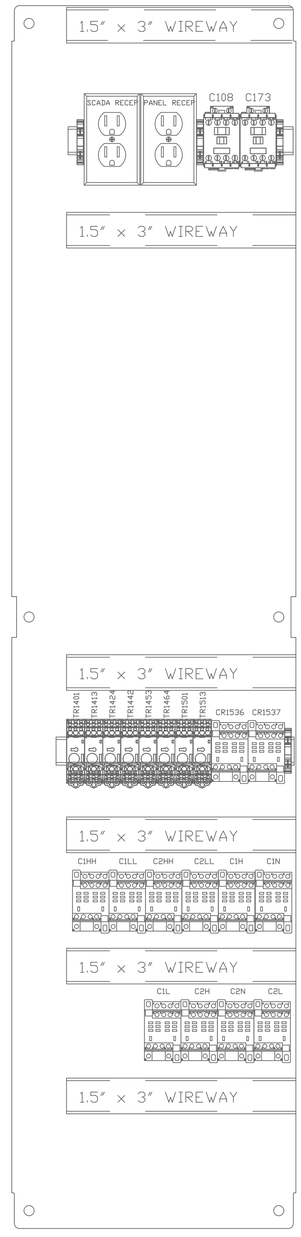

SAGINAW SCE-72SMP14 SIDE SUB PANEL

MOUNT MAIN SUB PANEL MOUNTING BRACKETS BACWARDS TO ACCOMODATE SIDE SUB PANEL

THE SIGNATURE AND SEAL OF THE UNDERSIGNED ON THIS DRAWING CERTIFIES THAT THE DESIGN INFORMATION CONTAINED IN THESE DRAWINGS ACCURATELY REFLECTS THE ORIGINAL DESIGN AND THE MATERIAL DESIGN CHANGES MADE DURING CONSTRUCTION, THAT WERE BROUGHT TO THE UNDERSIGNED'S ATTENTION. THESE DRAWINGS ARE INTENDED TO INCORPORATE ADDENDA, CHANGE ORDERS AND OTHER MATERIAL DESIGN CHANGES, BUT NOT NECESSARILY ALL SITE INSTRUCTIONS. THE UNDERSIGNED DOES NOT WARRANT OR GUARANTEE, NOR ACCEPT ANY RESPONSIBILITY FOR THE ACCURACY OR COMPLETENESS OF THE CONSTRUCTION RECORD INFORMATION SUPPLIED BY OTHERS CONTAINED IN THESE DRAWINGS, BUT DOES CERTIFY THAT THE CONSTRUCTION RECORD INFORMATION, IF ACCURATE AND COMPLETE, PROVIDES A SYSTEM WHICH SUBSTANTIALLY COMPLIES IN ALL MATERIAL RESPECTS WITH THE ORIGINAL DESIGN INTENT."

JITENDRA M. PATEL — STATE OF NEW YORK — 075431 — LICENSED PROFESSIONAL ENGINEER

7/1/21

jitu.patel Digitally signed by jitu.patel DN: cn=jitu.patel, o=amec, ou=amec, email=jitu.patel@amec.com, c=US Date: 2021.09.01 17:24:33-04'00'

NO.	DATE	REVISIONS	BY	CHK
	9/03/21	RECORD DRAWINGS	SCP	REM

DRAWN: AJF	PROJECT NO: 3617197453
ENGINEER: REM	SCALE: NOT APPLICABLE
CHECKED: SCP	APPROVED: S.PEARSON
DATE: 10/04/19	DATE:

amec
AMEC E & E PC
214-25 42nd Ave
Bayside, New York 11361

LOCKHEED MARTIN CORPORATION,
FORMER UNISYS FACILITY,
LAKE SUCCESS, NEW YORK
OPERABLE UNITS NO. 1 & 2
EXTRACTION / RECOVERY WELL ELECTRICAL UPGRADES

INSTRUMENTATION
MCP-100
SUB PANEL LAYOUT

EI-604

C:\Users\roger.riguler\Wood PLC\Lockheed Martin Great Neck - 8.0_Drawings\Rev. Electrical Upgrade Design\Sheets\EI-604.dwg Wed, 01 Sep 2021 - 1:36pm roger.riguler

UNAUTHORIZED ALTERATION OR ADDITION TO THIS DOCUMENT IS A VIOLATION OF SECTION 7209 OF THE NEW YORK STATE EDUCATION LAW.

NOTE:

1. SEE SHEET EI-001 FOR LEGEND, ABBREVIATIONS, AND GENERAL NOTES.

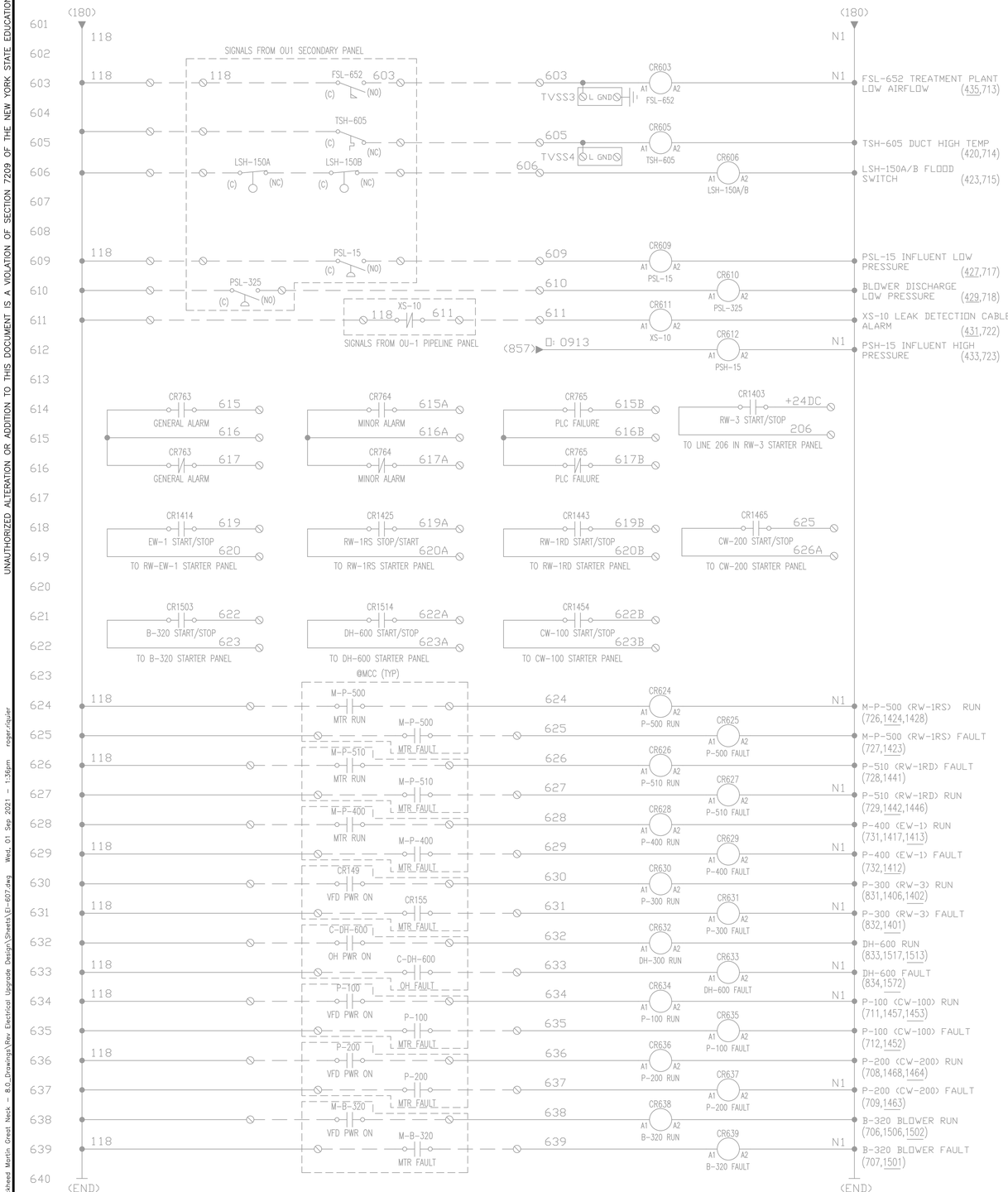

THE SIGNATURE AND SEAL OF THE UNDERSIGNED ON THIS DRAWING CERTIFIES THAT THE DESIGN INFORMATION CONTAINED IN THESE DRAWINGS ACCURATELY REFLECTS THE ORIGINAL DESIGN AND THE MATERIAL DESIGN CHANGES MADE DURING CONSTRUCTION. THAT WERE BROUGHT TO THE UNDERSIGNED'S ATTENTION. THESE DRAWINGS ARE INTENDED TO INCORPORATE ADDENDA, CHANGE ORDERS AND OTHER MATERIAL DESIGN CHANGES, BUT NOT NECESSARILY ALL SITE INSTRUCTIONS. THE UNDERSIGNED DOES NOT WARRANT OR GUARANTEE, NOR ACCEPT ANY RESPONSIBILITY FOR THE ACCURACY OR COMPLETENESS OF THE CONSTRUCTION RECORD INFORMATION SUPPLIED BY OTHERS CONTAINED IN THESE DRAWINGS, BUT DOES CERTIFY THAT THE CONSTRUCTION RECORD INFORMATION, IF ACCURATE AND COMPLETE, PROVIDES A SYSTEM WHICH SUBSTANTIALLY COMPLIES IN ALL MATERIAL RESPECTS WITH THE ORIGINAL DESIGN INTENT."

jitu.patel Digitally signed by jitu.patel DN: CN=jitu.patel Date: 2021.09.01 17:24:52-04'00'

STATE OF NEW YORK SITENDRA M. PATEL 079451 LICENSED PROFESSIONAL ENGINEER

9/1/21

NO.	DATE	REVISIONS	BY	CHK
	9/03/21	RECORD DRAWINGS	SCP	REM

DRAWN: AJF	PROJECT NO: 3671797453
ENGINEER: REM	SCALE: NOT APPLICABLE
CHECKED: SCP	APPROVED: S. PEARSON
DATE: 11/19/19	DATE:

amec
AMEC E & E PC
214-25 42nd Ave
Bayside, New York 11361

LOCKHEED MARTIN CORPORATION,
FORMER UNISYS FACILITY,
LAKE SUCCESS, NEW YORK
OPERABLE UNITS NO. 1 & 2
EXTRACTION / RECOVERY WELL ELECTRICAL UPGRADES

INSTRUMENTATION

MCP-100
SLOTS 1 AND 2 WIRING DIAGRAMS

EI-607

C:\Users\roger.rijuler\Wood PLC\Lockheed Martin Great Neck - 8.0_Drawings\Rev. Electrical Upgrade Design\Sheets\EI-607.dwg Wed, 01 Sep 2021 - 1:36pm roger.rijuler

UNAUTHORIZED ALTERATION OR ADDITION TO THIS DOCUMENT IS A VIOLATION OF SECTION 7209 OF THE NEW YORK STATE EDUCATION LAW.

NOTES:

1. SEE SHEET EI-001 FOR LEGEND, ABBREVIATIONS, AND GENERAL NOTES.
2. REPLACED ETHERNET SWITCHES & MEDIA CONVERTERS

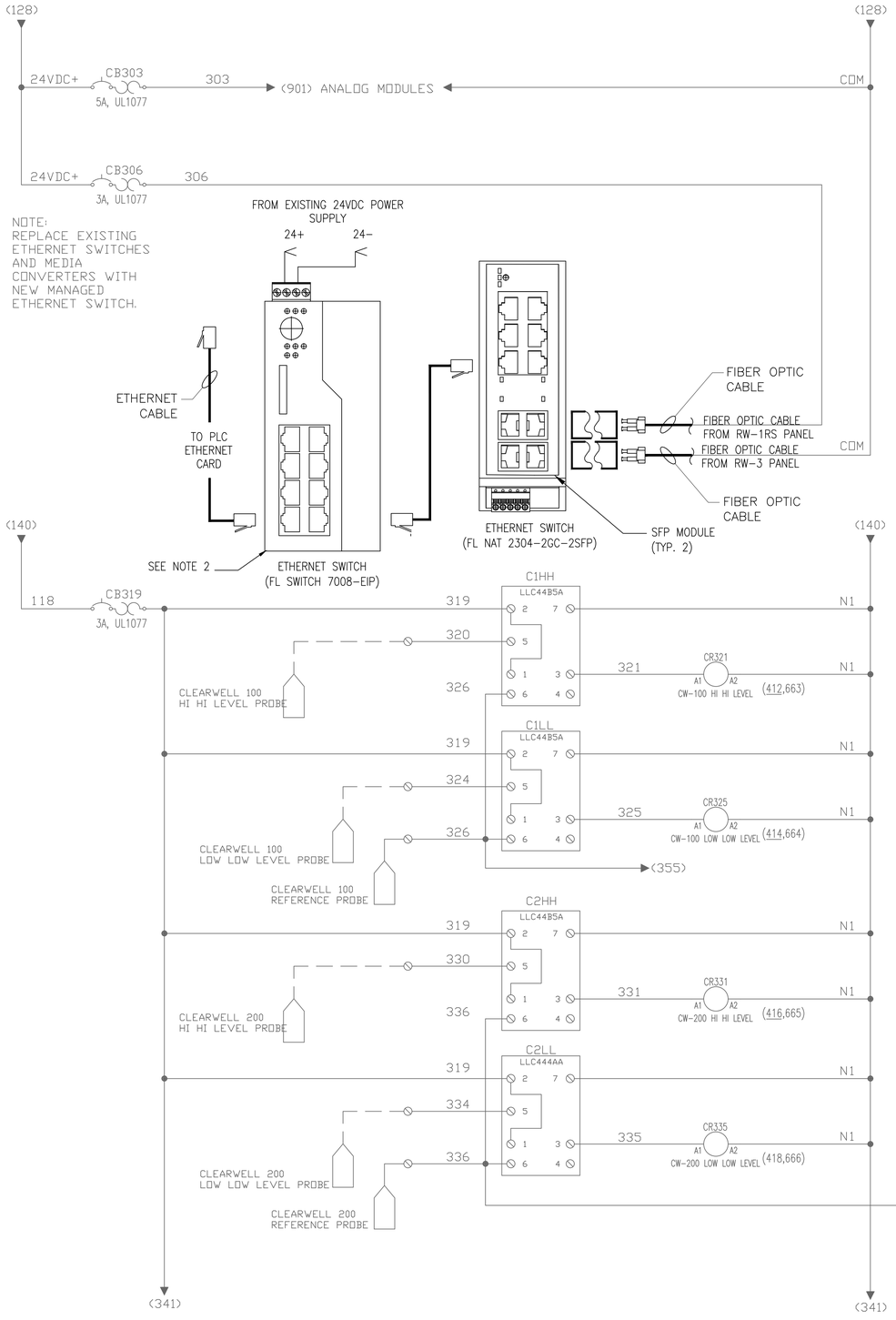

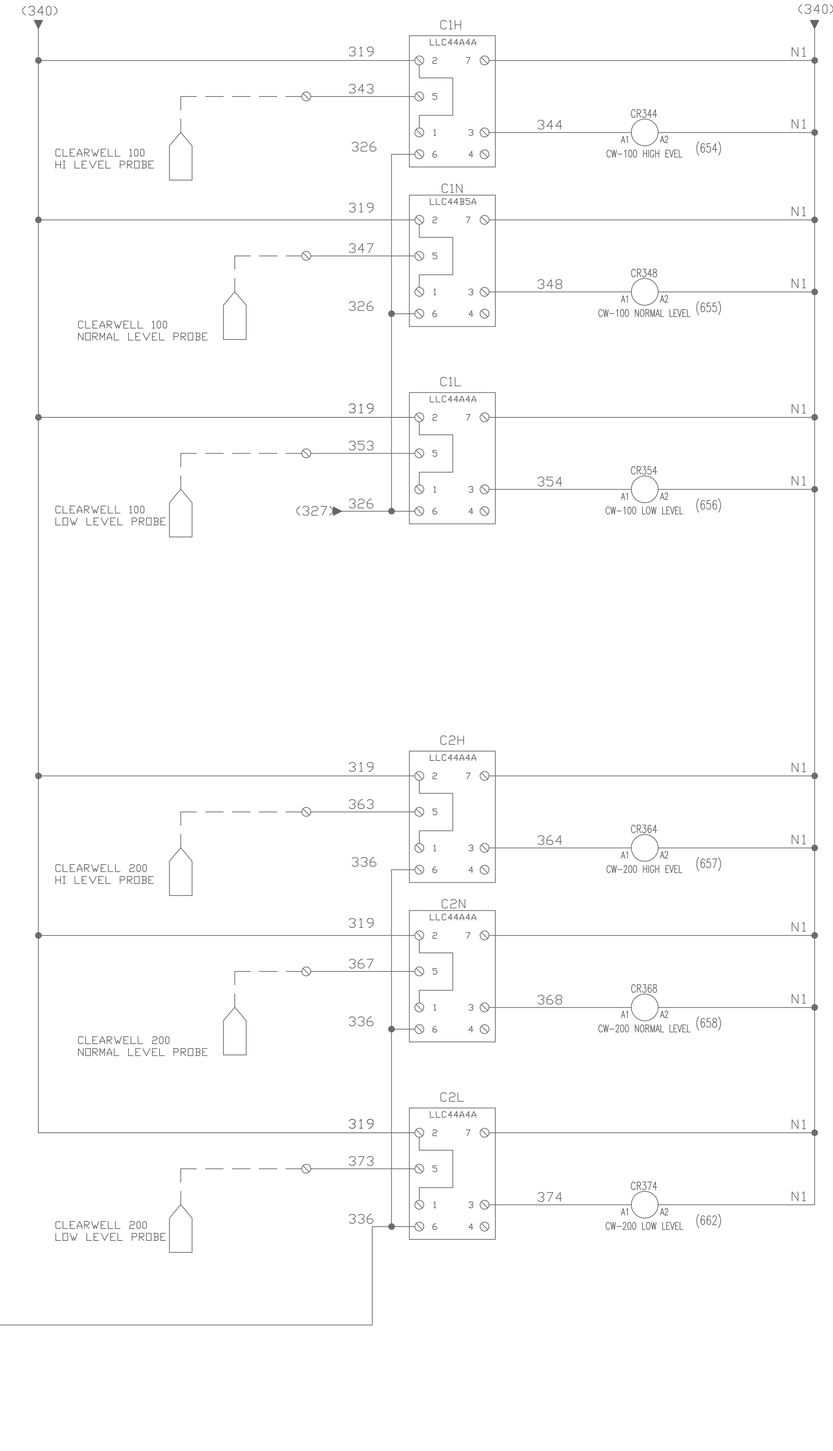

THE SIGNATURE AND SEAL OF THE UNDERSIGNED ON THIS DRAWING CERTIFIES THAT THE DESIGN INFORMATION CONTAINED IN THESE DRAWINGS ACCURATELY REFLECTS THE ORIGINAL DESIGN AND THE MATERIAL DESIGN CHANGES MADE DURING CONSTRUCTION, THAT WERE BROUGHT TO THE UNDERSIGNED'S ATTENTION. THESE DRAWINGS ARE INTENDED TO INCORPORATE ADDENDA, CHANGE ORDERS AND OTHER MATERIAL DESIGN CHANGES, BUT NOT NECESSARILY ALL SITE INSTRUCTIONS. THE UNDERSIGNED DOES NOT WARRANT OR GUARANTEE, NOR ACCEPT ANY RESPONSIBILITY FOR THE ACCURACY OR COMPLETENESS OF THE CONSTRUCTION RECORD INFORMATION SUPPLIED BY OTHERS CONTAINED IN THESE DRAWINGS, BUT DOES CERTIFY THAT THE CONSTRUCTION RECORD INFORMATION, IF ACCURATE AND COMPLETE, PROVIDES A SYSTEM WHICH SUBSTANTIALLY COMPLIES IN ALL MATERIAL RESPECTS WITH THE ORIGINAL DESIGN INTENT.*

JITENDRA M. PATEL — STATE OF NEW YORK — 075431 — LICENSED PROFESSIONAL ENGINEER

9/1/21

jitu.patel — Digitally signed by jitu.patel DN: CN=jitu.patel Date: 2021.09.01 17:25:09-04'00'

NO.	DATE	REVISIONS	BY	CHK
	9/03/21	RECORD DRAWINGS	SCP	REM

DRAWN: AJF	PROJECT NO: 3617197453
ENGINEER: REM	SCALE: NOT APPLICABLE
CHECKED: SCP	APPROVED: S.PEARSON
DATE: 10/04/19	DATE:

amec
AMEC E & E PC
214-25 42nd Ave
Bayside, New York 11361

LOCKHEED MARTIN CORPORATION,
FORMER UNISYS FACILITY,
LAKE SUCCESS, NEW YORK
OPERABLE UNITS NO. 1 & 2
EXTRACTION / RECOVERY WELL ELECTRICAL UPGRADES

INSTRUMENTATION

MCP-100 POWER & CONTROL WIRING DIAGRAM III

EI-609

G:\Users\roger.rigler\Wood PLC\Lockheed Martin Great Neck - 8.0_Drawings\New Electrical Upgrade Design\Sheets\EI-609.dwg Wed, 01 Sep 2021 - 1:36pm roger.rigler

UNAUTHORIZED ALTERATION OR ADDITION TO THIS DOCUMENT IS A VIOLATION OF SECTION 7209 OF THE NEW YORK STATE EDUCATION LAW.

NOTE:

1. SEE SHEET EI-001 FOR LEGEND, ABBREVIATIONS, AND GENERAL NOTES.
2. REPLACED CONTROL PANEL WITH NEW 316L STAINLESS STEEL ENCLOSURE. REPLACED ALL LIGHTS, SWITCHES, AND LABELS ON PANEL FRONT.
3. REUSED PANEL BACKBOARD IN NEW PANEL.
4. REMOVED ETHERNET SWITCH AND FIBER OPTIC MEDIA CONVERTERS.
5. INSTALLED NEW 24 VDC POWER SUPPLY, ETHERNET SWITCH, DIN RAIL, & END CLAMPS.
6. SEE DRAWING EI-622 FOR BILL OF MATERIALS.

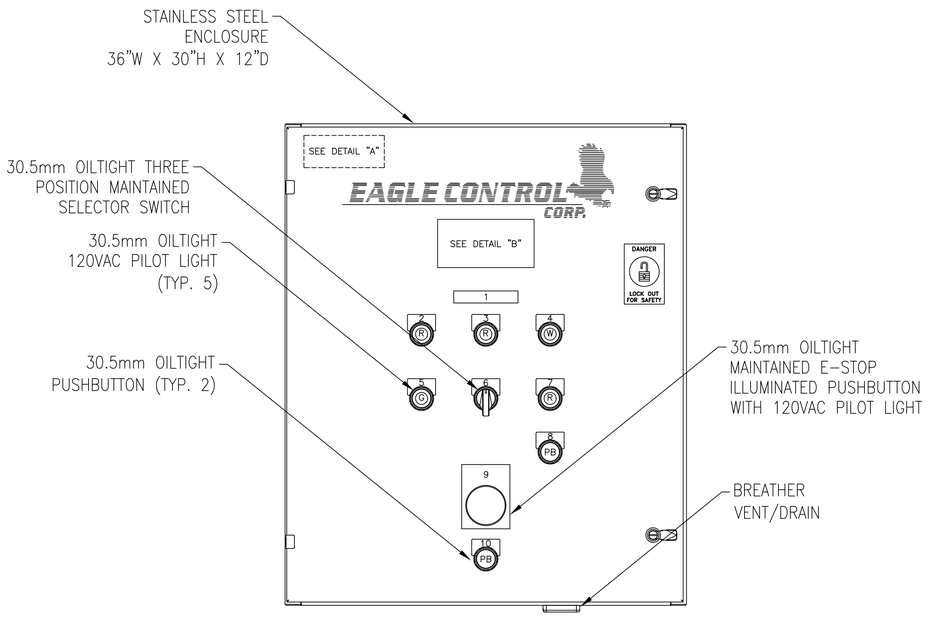

FRONT PANEL ARRANGEMENT

SCALE 3/16" = 1"

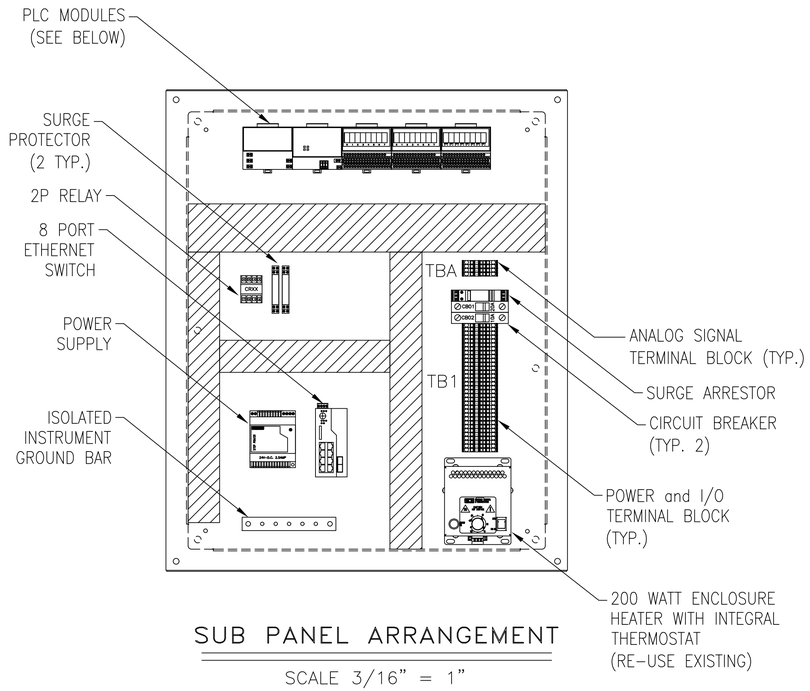

SUB PANEL ARRANGEMENT

SCALE 3/16" = 1"

NAMEPLATE DETAIL "A"

EAGLE CONTROL CORPORATION
23 OLD DOCK ROAD
YAPHANK, NY 11980
TEL: (631)924-1315

WELL RW-1RS
REMOTE CONTROL
EAGLE ORDER No. 1026

(NO SCALE)

NAMEPLATE DETAIL "B"

CONTROL PANEL ELECTRICAL DATA

LINE VOLTAGE	120VAC/1PH, 60HZ
FLA	10
PRIMARY FUSING	20A, CB
SCCR	5KA

(NO SCALE – 2"H x 4"W)

TERMINAL BLOCK LAYOUT

TBA	TB1	TB1	
A1	H	15	
A2	N	16	
SH	N1	17	
A3	N1	23	
A4	N1	24	
SH	G	25	
	L1	26	
	L1	143	TERMINALS PROVIDED FOR LSHH TO MCP-100
	L1	I:0411	
	L1	G	
	1	G	
	2	G	EQUIPMENT GROUNDS
	3	G	
	4	G	
	5	G	
	6		
	7		
	8		

NAMEPLATE SCHEDULE

NP #	QTY	NAMEPLATE INSCRIPTION	SIZE / (LENS)	NP #	QTY	NAMEPLATE INSCRIPTION	SIZE / (LENS)
1	1	RW-1RS	.75"H x 4"W	6	1	HAND – OFF – AUTO	30.5mm
2	1	VAULT HIGH LEVEL	30.5mm	7	1	PUMP FAILURE	30.5mm
3	1	LOW FLOW	30.5mm	8	1	ALARM RESET	30.5mm
4	1	120VAC POWER	30.5mm	9	1	PUSH TO STOP – PULL TO START	2.5"H x 2.5"W
5	1	PUMP RUNNING	30.5mm	10	1	I/O RESET	30.5mm

PLC MODULE DETAIL

POS. #	MODULE
1	POWER SUPPLY
2	ETHERNET COMMUNICATION ADAPTER
3	8 DIGITAL INPUTS
4	8 ISOLATED N.O. RELAY CONTACTS
5	2 ISOLATED ANALOG INPUTS, 2 OUTPUTS, 24VDC

STATE OF NEW YORK – VIRENDRA M. PATEL – 075431 – LICENSED PROFESSIONAL ENGINEER
9/1/21

Digitally signed by jitu.patel
DN: CN=jitu.patel
Date: 2021.09.01 17:25:30-04'00'
jitu.patel

THE SIGNATURE AND SEAL OF THE UNDERSIGNED ON THIS DRAWING CERTIFIES THAT THE DESIGN INFORMATION CONTAINED IN THESE DRAWINGS ACCURATELY REFLECTS THE ORIGINAL DESIGN AND THE MATERIAL DESIGN CHANGES MADE DURING CONSTRUCTION, THAT WERE BROUGHT TO THE UNDERSIGNED'S ATTENTION. THESE DRAWINGS ARE INTENDED TO INCORPORATE ADDENDA, CHANGE ORDERS AND OTHER MATERIAL DESIGN CHANGES, BUT NOT NECESSARILY ALL SITE INSTRUCTIONS. THE UNDERSIGNED DOES NOT WARRANT OR GUARANTEE, NOR ACCEPT ANY RESPONSIBILITY FOR THE ACCURACY OR COMPLETENESS OF THE CONSTRUCTION RECORD INFORMATION SUPPLIED BY OTHERS CONTAINED IN THESE DRAWINGS, BUT DOES CERTIFY THAT THE CONSTRUCTION RECORD INFORMATION, IF ACCURATE AND COMPLETE, PROVIDES A SYSTEM WHICH SUBSTANTIALLY COMPLIES IN ALL MATERIAL RESPECTS WITH THE ORIGINAL DESIGN INTENT."

NO.	DATE	REVISIONS	BY	CHK
	9/03/21	RECORD DRAWINGS	SCP	REM

DRAWN: NJG | PROJECT NO: 3671797453
ENGINEER: REM | SCALE: NOT APPLICABLE
CHECKED: SCP | APPROVED: S. PEARSON
DATE: 10/04/19 | DATE:

amec
AMEC E & E PC
214-25 42nd Ave
Bayside, New York 11361

LOCKHEED MARTIN CORPORATION,
FORMER UNISYS FACILITY,
LAKE SUCCESS, NEW YORK
OPERABLE UNITS NO. 1 & 2
EXTRACTION / RECOVERY WELL ELECTRICAL UPGRADES

INSTRUMENTATION
WELL RW-1RS
REMOTE CONTROL PANEL
LAYOUT

EI-621

G:\Users\roger.rigler\Wood PLC\Lockheed Martin Great Neck - R.D. Drawings\Rev. Electrical Upgrade Design\Sheets\EI-621.dwg Wed, 01 Sep 2021 - 1:37pm roger.rigler

UNAUTHORIZED ALTERATION OR ADDITION TO THIS DOCUMENT IS A VIOLATION OF SECTION 7209 OF THE NEW YORK STATE EDUCATION LAW.

LOCKHEED MARTIN CORPORATION
OPERABLE UNITS 1 & 2 ELECTRICAL UPGRADES

REMOTE I/O PANEL BILL OF MATERIALS

ITEM No.	QTY.	MANUFACTURER	PART NUMBER	DESCRIPTION	U.L. FILE No.	U.L. CCN
1	1	SAGINAW	SCE-36EL3012SS6LP	36"H x 30"W x 12"D ENCLOSURE	E69392	NITW
2	1	SAGINAW	SCE-36P30	SUB-PANEL	E69392	NITW
3	1	SAGINAW	SCE-HF2001A (RE-USE EXISTING)	SPACE HEATER	E358386	NITW2
4	1	SAGINAW	SCE-BVK	BREATHER VENT	E358386	NITW2
5	1	SAGINAW	SCE-ELMFK4SS6-OS	MOUNTING FEET	E69392	NITW
6	1	PHOENIX CONTACT	2907918 (PLT-SEC-T3-120-FM-UT)	SURGE SUPRESSOR	E330181	VZCA
7	1	SCHNEIDER ELECTRIC	M9F21120	20A CIRCUIT BREAKER	E90509	QVNU2
8	1	SCHNEIDER ELECTRIC	M9F21110	10A CIRCUIT BREAKER	E90509	QVNU2
9	2	PHOENIX CONTACT	2801512 (PT-IQ-1X2-EX-24DC-UT)	SURGE SUPPRESSOR FOR 4-20mA LOOPS	E138168	QVGQ
10	1	EATON/CUTLER-HAMMER	E34TPB120LWG06	30mm LED PILOT LIGHT - WHITE	E1230	NKCR
11	1	EATON/CUTLER-HAMMER	E34TPB120LGG06	30mm LED PILOT LIGHT - GREEN	E1230	NKCR
12	3	EATON/CUTLER-HAMMER	E34TPB120LRG06	30mm LED PILOT LIGHT - RED	E1230	NKCR
13	2	EATON/CUTLER-HAMMER	E34PB1-53X	30mm PUSHBUTTON	E1230	NKCR
14	1	EATON/CUTLER-HAMMER	E34VHBL1-2X	30mm 3-POSITION SWITCH	E1230	NKCR
15	1	EATON/CUTLER-HAMMER	E34GDB63LED06-1X	30mm EMERGENCY STOP PUSHBUTTON	E1230	NKCR
16	1	FINDER	60.12.8.120.0050	2-POLE RELAY, 120VAC COIL, (2) FORM C	E106390	NRNT2
17	1	FINDER	90.02	2-POLE RELAY SOCKET FOR 60 SERIES	E140923	SWIV
18	1	ALLEN-BRADLEY	1794-PS13	POWER SUPPLY	E65584	NRAQ2
19	1	ALLEN-BRADLEY	1794-AENTR	ETHERNET COMMUNICATION ADAPTER	E65584	NRAQ2
20	1	ALLEN-BRADLEY	1794-IA8	120VAC INPUT MODULE, 8 PT	E65584	NRAQ2
21	1	ALLEN-BRADLEY	1794-OW8	RELAY OUTPUT MODULE, 8 PT	E65584	NRAQ2
22	1	ALLEN-BRADLEY	1794-IF2XOF2I	ANALOG INPUT/OUTPUT MODULE, 2 PT/2 PT	E65584	NRAQ2
23	3	ALLEN-BRADLEY	1794-TB3	TERMINAL BASE	E65584	NRAQ2
24	1	PHOENIX CONTACT	2701554 (FL SWITCH 7006-2GC-EIP)	8 PORT MANAGED ETHERNET SWITCH	E140324	NKCR
25	1	PHOENIX CONTACT	2868651 STEP-PS/1AC/24DC/2.5	2.4 AMP POWER SUPPLY	E214596	QQGQ
26	30	PHOENIX CONTACT	3031364	TERMINAL BLOCKS	E60425	XCFR2
27	2	PHOENIX CONTACT	2891081 (FL-SFP-FX)	FIBER TRANSCEIVER CARTRIDGE, 100 Mbit, MULTIMODE, LC CONNECTOR	-	-

STATE OF NEW YORK
JITENDRA M. PATEL
075431
LICENSED PROFESSIONAL ENGINEER
10/15/21

Digitally signed by jitu patel
DN: CN=jitu.patel
Date: 2021.10.15 11:02:14-04'00'

THE SIGNATURE AND SEAL OF THE UNDERSIGNED ON THIS DRAWING CERTIFIES THAT THE DESIGN INFORMATION CONTAINED IN THESE DRAWINGS ACCURATELY REFLECTS THE ORIGINAL DESIGN AND THE MATERIAL DESIGN CHANGES MADE DURING CONSTRUCTION, THAT WERE BROUGHT TO THE UNDERSIGNED'S ATTENTION. THESE DRAWINGS ARE INTENDED TO INCORPORATE ADDENDA, CHANGE ORDERS AND OTHER MATERIAL DESIGN CHANGES, BUT NOT NECESSARILY ALL SITE INSTRUCTIONS. THE UNDERSIGNED DOES NOT WARRANT OR GUARANTEE, NOR ACCEPT ANY RESPONSIBILITY FOR THE ACCURACY OR COMPLETENESS OF THE CONSTRUCTION RECORD INFORMATION SUPPLIED BY OTHERS CONTAINED IN THESE DRAWINGS, BUT DOES CERTIFY THAT THE CONSTRUCTION RECORD INFORMATION, IF ACCURATE AND COMPLETE, PROVIDES A SYSTEM WHICH SUBSTANTIALLY COMPLIES IN ALL MATERIAL RESPECTS WITH THE ORIGINAL DESIGN INTENT."

NO.	DATE	REVISIONS	BY	CHK
	10/15/21	RECORD DRAWINGS	SCP	REM

DRAWN: NJG	PROJECT NO: 3671797453
ENGINEER: REM	SCALE: NOT APPLICABLE
CHECKED: SCP	APPROVED: S. PEARSON
DATE: 10/04/19	DATE:

amec
AMEC E & E PC
214-25 42nd Ave
Bayside, New York 11361

LOCKHEED MARTIN CORPORATION,
FORMER UNISYS FACILITY,
LAKE SUCCESS, NEW YORK
OPERABLE UNITS NO. 1 & 2
EXTRACTION / RECOVERY WELL ELECTRICAL UPGRADES

INSTRUMENTATION

WELL RW-1RS
REMOTE CONTROL PANEL
BILL OF MATERIALS

EI-622

C:\Users\roger.rquier\Wood PLC\Lockheed Martin Great Neck - 8.0_Drawings\Rev Electrical Upgrade Design\Sheets\EI-622.dwg Thu, 14 Oct 2021 - 7:45am roger.rquier

UNAUTHORIZED ALTERATION OR ADDITION TO THIS DOCUMENT IS A VIOLATION OF SECTION 7209 OF THE NEW YORK STATE EDUCATION LAW.

FROM RW-1RS BREAKER PANEL CKT. 5 20A
LINE IN 120VAC/1ø/60HZ/20A

H
#12awg BLACK
CB1 (20amps)
N
G
#12awg WHITE
5
6
POWER LINE FILTER – SURGE ARRESTOR
1
2
3
4
L1
E-STOP
1
2
REMOVE JUMPER FOR ADDITIONAL E-STOPS AS REQUIRED
#16awg RED (TYP.)
ESR
(2)
C
(7)
EMERGENCY STOP RELAY
R
3
4
RUN BACK TO MCP-100
#14awg YELLOW
ILL-PUSHBUTTON PRESS TO TEST
W
120VAC POWER ON
HEATER
L1
N
200W
G
200W ENCLOSURE HEATER (FROM EXISTING PANEL)
CB2
(10amp)
9
INSTRUMENT POWER SUPPLY
L
N
24VDC
+
–
#16awg BLU/WHT
(24–)
111
(24+)
#16awg BLUE
CONTINUED ON D1026-05 (1794-IF2X0F2I)
#16awg BLU/WHT
112
(24–)
(24+)
#16awg BLUE
CONTINUED AT RIGHT (TBA)
POSITION 1
REMOTE I/O POWER SUPPLY
1794-PS13
C
(L1)
(N)
B
J
(+24)
(+24)
G
I
(–24)
GND
A
(–24)
H
#16awg BLUE
101
(24+)
CONTINUED AT RIGHT (1794-AENTR)
102
(24–)
#16awg BLU/WHT
#16awg BLU/WHT
104
(24–)
CONTINUED ON D1026-04 (1794-OW8)
103
(24+)
#16awg BLUE
L1
N1
CONTINUED ON EI-624

(8)
7
ESR
SPARE
(6)
8
#14awg YELLOW (TYP.)

CONTINUED FROM BELOW LEFT

101 (24+)
#16awg BLUE
102 (24–)
#16awg WHITE/BLUE
POSITION 2
ETHERNET COMMUNICATION ADAPTER
1794-AENTR
101
C
(+24)
(–24)
B
102
.44OFLA
D
E
IP ADDRESS 192.168.100.116
ETHERNET CABLE
TO 1794-AENTR
111 (24+)
112 (COM)
ETHERNET SWITCH
FIBER OPTIC CABLE
FIBER OPTIC CABLE FROM RW-1RD PANEL
FIBER OPTIC CABLE FROM EW-1 PANEL
FIBER OPTIC CABLE
SFP MODULE (TYP. 2)



jitu.patel Digitally signed by jitu.patel DN: CN=jitu.patel Date: 2021.10.15 11:02:38-04'00'

THE SIGNATURE AND SEAL OF THE UNDERSIGNED ON THIS DRAWING CERTIFIES THAT THE DESIGN INFORMATION CONTAINED IN THESE DRAWINGS ACCURATELY REFLECTS THE ORIGINAL DESIGN AND THE MATERIAL DESIGN CHANGES MADE DURING CONSTRUCTION, THAT WERE BROUGHT TO THE UNDERSIGNED'S ATTENTION. THESE DRAWINGS ARE INTENDED TO INCORPORATE ADDENDA, CHANGE ORDERS AND OTHER MATERIAL DESIGN CHANGES, BUT NOT NECESSARILY ALL SITE INSTRUCTIONS. THE UNDERSIGNED DOES NOT WARRANT OR GUARANTEE, NOR ACCEPT ANY RESPONSIBILITY FOR THE ACCURACY OR COMPLETENESS OF THE CONSTRUCTION RECORD INFORMATION SUPPLIED BY OTHERS CONTAINED IN THESE DRAWINGS, BUT DOES CERTIFY THAT THE CONSTRUCTION RECORD INFORMATION, IF ACCURATE AND COMPLETE, PROVIDES A SYSTEM WHICH SUBSTANTIALLY COMPLIES IN ALL MATERIAL RESPECTS WITH THE ORIGINAL DESIGN INTENT."

NO.	DATE	REVISIONS	BY	CHK
	10/15/21	RECORD DRAWINGS	SCP	REM

DRAWN: NJG	PROJECT NO: 3671797453
ENGINEER: REM	SCALE: NOT APPLICABLE
CHECKED: SCP	APPROVED: S. PEARSON
DATE: 10/04/19	DATE:

amec
AMEC E & E PC
214-25 42nd Ave
Bayside, New York 11361

LOCKHEED MARTIN CORPORATION,
FORMER UNISYS FACILITY,
LAKE SUCCESS, NEW YORK
OPERABLE UNITS NO. 1 & 2
EXTRACTION / RECOVERY WELL ELECTRICAL UPGRADES

INSTRUMENTATION

WELL RW-1RS
REMOTE CONTROL PANEL
POWER DISTRIBUTION SCHEMATIC

EI-623

C:\Users\roger.rquier\Wood PLC\Lockheed Martin Great Neck - 8.0_Drawings\Rev Electrical Upgrade Design\Sheets\EI-623.dwg Thu, 14 Oct 2021 - 7:45am roger.rquier

UNAUTHORIZED ALTERATION OR ADDITION TO THIS DOCUMENT IS A VIOLATION OF SECTION 7209 OF THE NEW YORK STATE EDUCATION LAW.

C:\Users\roger.rigular\Wood PLC\Lockheed Martin Great Neck - 8.0_Drawings\Rev Electrical Upgrade Design\Sheets\EI-624.dwg Wed, 01 Sep 2021 - 1:37pm roger.rigular

NOTE:

1. SEE SHEET EI-001 FOR LEGEND, ABBREVIATIONS, AND GENERAL NOTES.

CONTINUED FROM EI-623

L1 N1

POSITION 3
8 DIGITAL INPUT I/O MODULE
1794-IA8
WITH 1794-TB3 (BASE)

#16awg RED (TYPICAL)

C-34 (120V)

B-16 (N) — N1

RW-1RS SELECTOR SW.
(HAND-OFF-AUTO)

L1 — 11 — (HAND) — A-0 — C-35 — B-17 — RW-1RS SELECTOR SWITCH IN HAND

12 — (AUTO) — A-2 — C-37 — B-19 — RW-1RS SELECTOR SWITCH IN AUTO

ESR
(1) (3)
13 — A-4 — C-39 — B-21 — EMERGENCY STOP CONTACT

ALARM RESET
14 — A-6 — C-41 — B-23 — ALARM RESET PUSHBUTTON

L1 — RED — LSH-500 (C) (NO) (CLOSE ON RISE) — BLK — 15 — A-8 — C-43 — B-25 — LSH-500 RW-1RS VAULT HIGH LEVEL SWITCH (EXISTING)

L1 — 16 — A-10 — C-45 — B-27 — SPARE

L1 — 17 — A-12 — C-47 — B-23 — SPARE

I/O RESET
18 — A-14 — C-49 — B-31 — I/O RESET PUSHBUTTON

SIGNAL PASSES THROUGH PIPELINE PANEL TO MCP

143 — RED — RW-1RS LSHH (C) (NC) (OPEN ON RISE) — WHT — I:O 411 — TO MCP-100 PANEL VIA PIPELINE PANEL

L1 N1

CONTINUED ABOVE RIGHT

CONTINUED FROM BELOW LEFT

L1 N1

POSITION 4
8 RELAY CONTACT I/O MODULE
1794-OW8
WITH 1794-TB3 (BASE)

34 — 103 (24+)
16 — 104 (24-)
CONTINUED FROM D1026-03

L1 — A-0

PUMP RUNNING PRESS TO TEST
A-1 — 19 — G — N1 — PUMP P-500 RUNNING

A-2

PUMP FAILURE PRESS TO TEST
A-3 — 20 — R — PUMP P-500 FAILURE

A-4

LOW FLOW PRESS TO TEST
A-5 — 21 — R — PUMP P-500 LOW FLOW

A-6

VAULT HIGH LEVEL PRESS TO TEST
A-7 — 22 — R — RW-1RS VAULT HIGH LEVEL

A-8

A-9 — 23 — N1 — SPARE

A-10

A-11 — 24 — N1 — SPARE

A-12

A-13 — 25 — N1 — SPARE

A-14

A-15 — 26 — N1 — SPARE



jitu.patel Digitally signed by jitu.patel DN: CN=jitu.patel Date: 2021.09.01 17:26:21-04'00'

THE SIGNATURE AND SEAL OF THE UNDERSIGNED ON THIS DRAWING CERTIFIES THAT THE DESIGN INFORMATION CONTAINED IN THESE DRAWINGS ACCURATELY REFLECTS THE ORIGINAL DESIGN AND THE MATERIAL DESIGN CHANGES MADE DURING CONSTRUCTION, THAT WERE BROUGHT TO THE UNDERSIGNED'S ATTENTION. THESE DRAWINGS ARE INTENDED TO INCORPORATE ADDENDA, CHANGE ORDERS AND OTHER MATERIAL DESIGN CHANGES, BUT NOT NECESSARILY ALL SITE INSTRUCTIONS. THE UNDERSIGNED DOES NOT WARRANT OR GUARANTEE, NOR ACCEPT ANY RESPONSIBILITY FOR THE ACCURACY OR COMPLETENESS OF THE CONSTRUCTION RECORD INFORMATION SUPPLIED BY OTHERS CONTAINED IN THESE DRAWINGS, BUT DOES CERTIFY THAT THE CONSTRUCTION RECORD INFORMATION, IF ACCURATE AND COMPLETE, PROVIDES A SYSTEM WHICH SUBSTANTIALLY COMPLIES IN ALL MATERIAL RESPECTS WITH THE ORIGINAL DESIGN INTENT."

NO.	DATE	REVISIONS	BY	CHK
	9/03/21	RECORD DRAWINGS	SCP	REM

DRAWN: BRT	PROJECT NO: 3617187443
ENGINEER: REM	SCALE: NOT APPLICABLE
CHECKED: SCP	APPROVED: S. PEARSON
DATE: 4/30/20	DATE:

amec
AMEC E & E PC
214-25 42nd Ave
Bayside, New York 11361

LOCKHEED MARTIN CORPORATION,
FORMER UNISYS FACILITY,
LAKE SUCCESS, NEW YORK
OPERABLE UNITS NO. 1 & 2
EXTRACTION / RECOVERY WELL ELECTRICAL UPGRADES

INSTRUMENTATION
WELL RW-1RS
REMOTE CONTROL PANEL
DIGITAL I/O SCHEMATIC

EI-624

UNAUTHORIZED ALTERATION OR ADDITION TO THIS DOCUMENT IS A VIOLATION OF SECTION 7209 OF THE NEW YORK STATE EDUCATION LAW.

NOTE:

1. SEE SHEET EI-001 FOR LEGEND, ABBREVIATIONS, AND GENERAL NOTES.

CONTINUED FROM EI-624

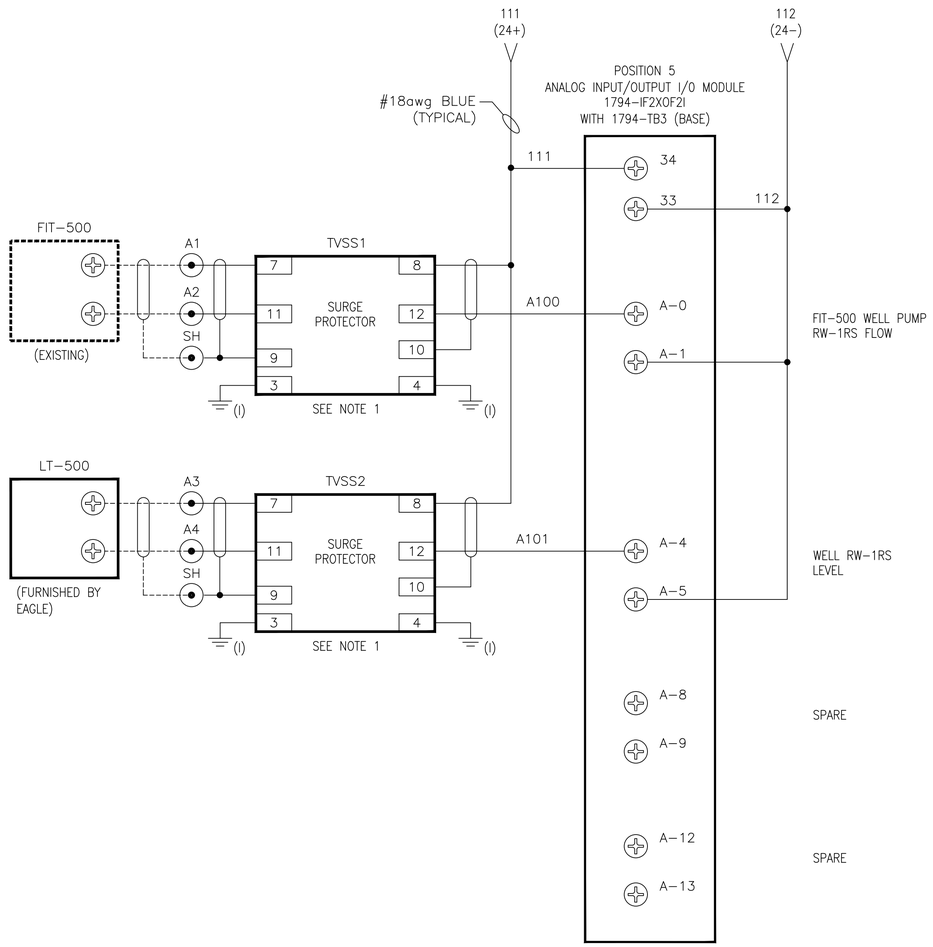

THE SIGNATURE AND SEAL OF THE UNDERSIGNED ON THIS DRAWING CERTIFIES THAT THE DESIGN INFORMATION CONTAINED IN THESE DRAWINGS ACCURATELY REFLECTS THE ORIGINAL DESIGN AND THE MATERIAL DESIGN CHANGES MADE DURING CONSTRUCTION, THAT WERE BROUGHT TO THE UNDERSIGNED'S ATTENTION. THESE DRAWINGS ARE INTENDED TO INCORPORATE ADDENDA, CHANGE ORDERS AND OTHER MATERIAL DESIGN CHANGES, BUT NOT NECESSARILY ALL SITE INSTRUCTIONS. THE UNDERSIGNED DOES NOT WARRANT OR GUARANTEE, NOR ACCEPT ANY RESPONSIBILITY FOR THE ACCURACY OR COMPLETENESS OF THE CONSTRUCTION RECORD INFORMATION SUPPLIED BY OTHERS CONTAINED IN THESE DRAWINGS, BUT DOES CERTIFY THAT THE CONSTRUCTION RECORD INFORMATION, IF ACCURATE AND COMPLETE, PROVIDES A SYSTEM WHICH SUBSTANTIALLY COMPLIES IN ALL MATERIAL RESPECTS WITH THE ORIGINAL DESIGN INTENT."

JITENDRA M. PATEL
STATE OF NEW YORK
075451
LICENSED PROFESSIONAL ENGINEER
9/1/21

jitu.patel Digitally signed by jitu.patel DN: CN=jitu.patel Date: 2021.09.01 17:26:36-04'00'

NO.	DATE	REVISIONS	BY	CHK
	9/03/21	RECORD DRAWINGS	SCP	REM

DRAWN: BRT	PROJECT NO: 3617187443
ENGINEER: REM	SCALE: NOT APPLICABLE
CHECKED: SCP	APPROVED: S. PEARSON
DATE: 4/30/20	DATE:

amec
AMEC E & E PC
214-25 42nd Ave
Bayside, New York 11361

LOCKHEED MARTIN CORPORATION,
FORMER UNISYS FACILITY,
LAKE SUCCESS, NEW YORK
OPERABLE UNITS NO. 1 & 2
EXTRACTION / RECOVERY WELL ELECTRICAL UPGRADES

INSTRUMENTATION
WELL RW-1RS
REMOTE CONTROL PANEL
ANALOG I/O SCHEMATIC

EI-625

O:\Users\roger.rigler\Wood PLC\Lockheed Martin Great Neck - B.O_Drawings\Rev Electrical Upgrade Design\Sheets\EI-625.dwg Wed, 01 Sep 2021 - 1:37pm roger.rigler

UNAUTHORIZED ALTERATION OR ADDITION TO THIS DOCUMENT IS A VIOLATION OF SECTION 7209 OF THE NEW YORK STATE EDUCATION LAW.

NOTE:

1. SEE SHEET EI-001 FOR LEGEND, ABBREVIATIONS, AND GENERAL NOTES.

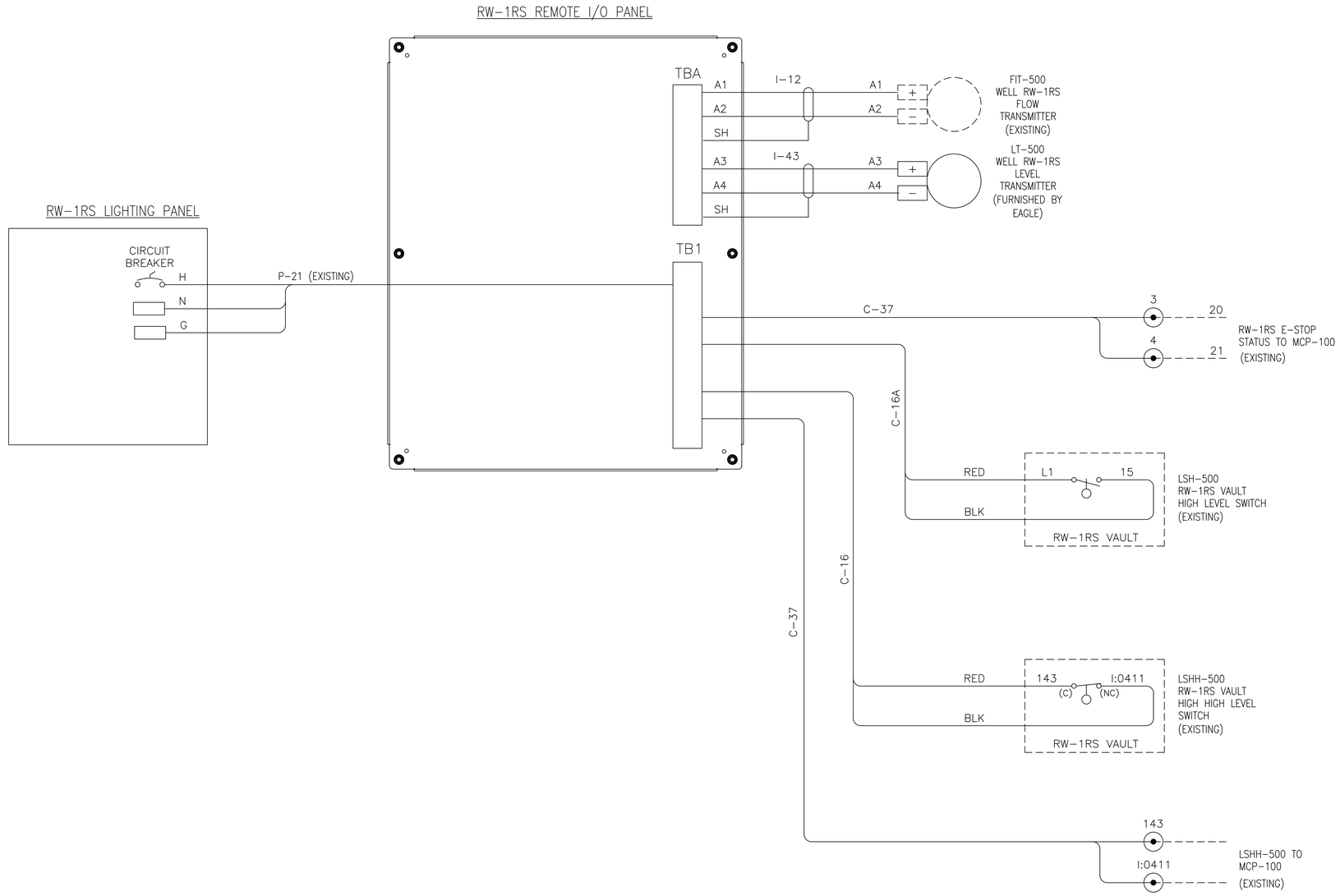

THE SIGNATURE AND SEAL OF THE UNDERSIGNED ON THIS DRAWING CERTIFIES THAT THE DESIGN INFORMATION CONTAINED IN THESE DRAWINGS ACCURATELY REFLECTS THE ORIGINAL DESIGN AND THE MATERIAL DESIGN CHANGES MADE DURING CONSTRUCTION, THAT WERE BROUGHT TO THE UNDERSIGNED'S ATTENTION. THESE DRAWINGS ARE INTENDED TO INCORPORATE ADDENDA, CHANGE ORDERS AND OTHER MATERIAL DESIGN CHANGES, BUT NOT NECESSARILY ALL SITE INSTRUCTIONS. THE UNDERSIGNED DOES NOT WARRANT OR GUARANTEE, NOR ACCEPT ANY RESPONSIBILITY FOR THE ACCURACY OR COMPLETENESS OF THE CONSTRUCTION RECORD INFORMATION SUPPLIED BY OTHERS CONTAINED IN THESE DRAWINGS, BUT DOES CERTIFY THAT THE CONSTRUCTION RECORD INFORMATION, IF ACCURATE AND COMPLETE, PROVIDES A SYSTEM WHICH SUBSTANTIALLY COMPLIES IN ALL MATERIAL RESPECTS WITH THE ORIGINAL DESIGN INTENT."

STATE OF NEW YORK
SITENDRA M. PATEL
LICENSED PROFESSIONAL ENGINEER
075451
9/1/21

jitu.patel Digitally signed by jitu.patel DN: CN=jitu.patel Date: 2021.09.01 17:26:53-04'00'

NO.	DATE	REVISIONS	BY	CHK
	9/03/21	RECORD DRAWINGS	SCP	REM

DRAWN: BRT	PROJECT NO: 3617187443
ENGINEER: REM	SCALE: NOT APPLICABLE
CHECKED: SCP	APPROVED: S. PEARSON
DATE:	DATE:

amec
AMEC E & E PC
214-25 42nd Ave
Bayside, New York 11361

LOCKHEED MARTIN CORPORATION,
FORMER UNISYS FACILITY,
LAKE SUCCESS, NEW YORK
OPERABLE UNITS NO. 1 & 2
EXTRACTION / RECOVERY WELL ELECTRICAL UPGRADES

INSTRUMENTATION
WELL RW-1RS
REMOTE CONTROL PANEL
INTERCONNECTION WIRING DIAGRAM

EI-626

C:\Users\roger.rigler\Wood PLC\Lockheed Martin Great Neck - 8.0_Drawings\Rev. Electrical Upgrade Design\Sheets\EI-626.dwg Wed, 01 Sep 2021 - 1:37pm roger.rigler

UNAUTHORIZED ALTERATION OR ADDITION TO THIS DOCUMENT IS A VIOLATION OF SECTION 7209 OF THE NEW YORK STATE EDUCATION LAW.

NOTE:

1. SEE SHEET EI-001 FOR LEGEND, ABBREVIATIONS, AND GENERAL NOTES.
2. REPLACED CONTROL PANEL WITH NEW 316L STAINLESS STEEL ENCLOSURE. REPLACED ALL LIGHTS, SWITCHES, AND LABELS ON PANEL FRONT.
3. REUSED PANEL BACKBOARD IN NEW PANEL.
4. REMOVED ETHERNET SWITCH AND FIBER OPTIC MEDIA CONVERTERS.
5. INSTALLED NEW 24 VDC POWER SUPPLY, ETHERNET SWITCH, DIN RAIL, & END CLAMPS.
6. SEE DRAWING EI-642 FOR BILL OF MATERIALS.

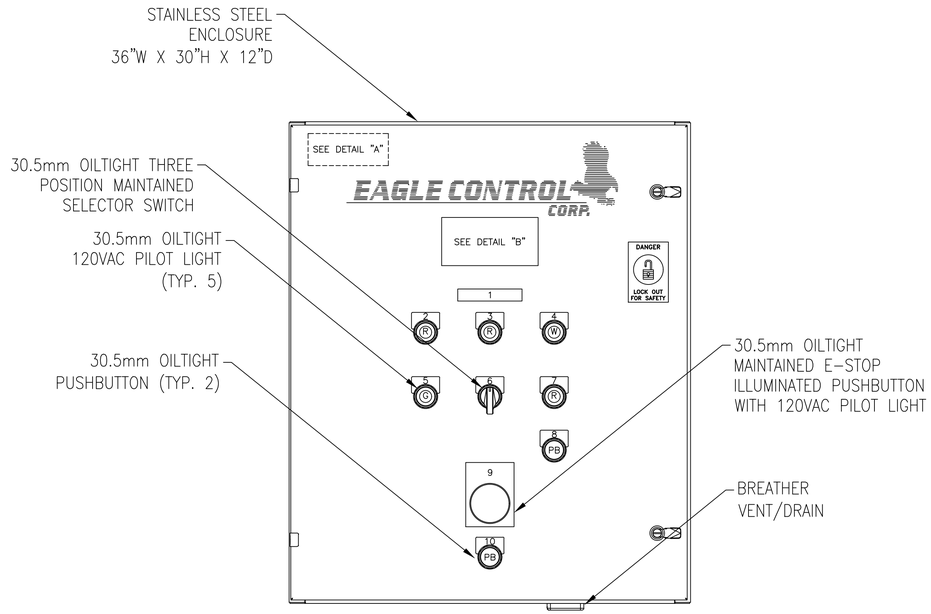

FRONT PANEL ARRANGEMENT

SCALE 3/16" = 1"

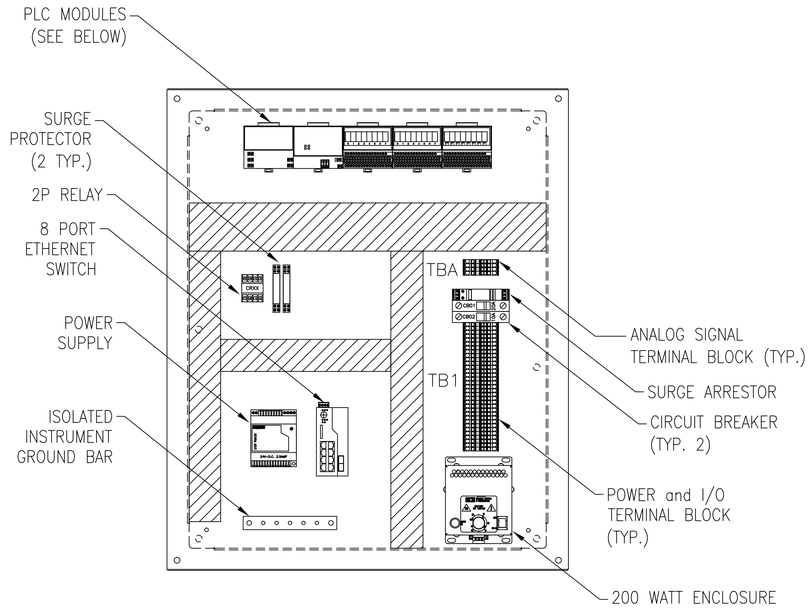

SUB PANEL ARRANGEMENT

SCALE 3/16" = 1"

NAMEPLATE DETAIL "A"

EAGLE CONTROL CORPORATION
23 OLD DOCK ROAD
YAPHANK, NY 11980
TEL: (631)924-1315

WELL RW-1RD
REMOTE CONTROL
EAGLE ORDER No. 1026

(NO SCALE)

NAMEPLATE DETAIL "B"

CONTROL PANEL ELECTRICAL DATA

LINE VOLTAGE	120VAC/1PH, 60HZ
FLA	10
PRIMARY FUSING	20A, CB
SCCR	5KA

(NO SCALE – 2"H x 4"W)

TERMINAL BLOCK LAYOUT

TBA	TB1	TB1	
A1	H	15	
A2	N	16	
SH	N1	17	
A3	N1	23	
A4	N1	24	
SH	G	25	
	L1	26	
	L1	143	TERMINALS PROVIDED FOR LSHH TO MCP-100
	L1	I:0410	
	L1	G	
	1	G	
	2	G	EQUIPMENT GROUNDS
	3	G	
	4	G	
	5	G	
	6		
	7		
	8		

NAMEPLATE SCHEDULE

NP #	QTY	NAMEPLATE INSCRIPTION	SIZE / (LENS)	NP #	QTY	NAMEPLATE INSCRIPTION	SIZE / (LENS)
1	1	RW-1RD	.75"H x 4"W	6	1	HAND – OFF – AUTO	30.5mm
2	1	VAULT HIGH LEVEL	30.5mm	7	1	PUMP FAILURE	30.5mm
3	1	LOW FLOW	30.5mm	8	1	ALARM RESET	30.5mm
4	1	120VAC POWER	30.5mm	9	1	PUSH TO STOP – PULL TO START	2.5"H x 2.5"W
5	1	PUMP RUNNING	30.5mm	10	1	I/O RESET	30.5mm

PLC MODULE DETAIL

POS. #	MODULE
1	POWER SUPPLY
2	ETHERNET COMMUNICATION ADAPTER
3	8 DIGITAL INPUTS
4	8 ISOLATED N.O. RELAY CONTACTS
5	2 ISOLATED ANALOG INPUTS, 2 OUTPUTS, 24VDC

STATE OF NEW YORK
JOSHUA M. PAGE
079451
LICENSED PROFESSIONAL ENGINEER

9/1/21

jitu.patel Digitally signed by jitu.patel DN: CN=jitu.patel Date: 2021.09.01 17:27:09-04'00'

THE SIGNATURE AND SEAL OF THE UNDERSIGNED ON THIS DRAWING CERTIFIES THAT THE DESIGN INFORMATION CONTAINED IN THESE DRAWINGS ACCURATELY REFLECTS THE ORIGINAL DESIGN AND THE MATERIAL DESIGN CHANGES MADE DURING CONSTRUCTION, THAT WERE BROUGHT TO THE UNDERSIGNED'S ATTENTION. THESE DRAWINGS ARE INTENDED TO INCORPORATE ADDENDA, CHANGE ORDERS AND OTHER MATERIAL DESIGN CHANGES, BUT NOT NECESSARILY ALL SITE INSTRUCTIONS. THE UNDERSIGNED DOES NOT WARRANT OR GUARANTEE, NOR ACCEPT ANY RESPONSIBILITY FOR THE ACCURACY OR COMPLETENESS OF THE CONSTRUCTION RECORD INFORMATION SUPPLIED BY OTHERS CONTAINED IN THESE DRAWINGS, BUT DOES CERTIFY THAT THE CONSTRUCTION RECORD INFORMATION, IF ACCURATE AND COMPLETE, PROVIDES A SYSTEM WHICH SUBSTANTIALLY COMPLIES IN ALL MATERIAL RESPECTS WITH THE ORIGINAL DESIGN INTENT."

NO.	DATE	REVISIONS	BY	CHK
	9/03/21	RECORD DRAWINGS	SCP	REM

DRAWN: NJG	PROJECT NO: 3671797453
ENGINEER: REM	SCALE: NOT APPLICABLE
CHECKED: SCP	APPROVED: S. PEARSON
DATE: 10/04/19	DATE:

amec
AMEC E & E PC
214-25 42nd Ave
Bayside, New York 11361

LOCKHEED MARTIN CORPORATION,
FORMER UNISYS FACILITY,
LAKE SUCCESS, NEW YORK
OPERABLE UNITS NO. 1 & 2
EXTRACTION / RECOVERY WELL ELECTRICAL UPGRADES

INSTRUMENTATION
WELL RW-1RD
REMOTE CONTROL PANEL
LAYOUT

EI-641

G:\Users\roger.rigler\Wood_PLC\Lockheed Martin Great Neck – 8.0_Drawings\Rev Electrical Upgrade Design\Sheets\EI-641.dwg Wed, 01 Sep 2021 – 1:37pm roger.rigler

UNAUTHORIZED ALTERATION OR ADDITION TO THIS DOCUMENT IS A VIOLATION OF SECTION 7209 OF THE NEW YORK STATE EDUCATION LAW.

LOCKHEED MARTIN CORPORATION
OPERABLE UNITS 1 & 2 ELECTRICAL UPGRADES

REMOTE I/O PANEL BILL OF MATERIALS

ITEM No.	QTY.	MANUFACTURER	PART NUMBER	DESCRIPTION	U.L. FILE No.	U.L. CCN
1	1	SAGINAW	SCE-36EL3012SS6LP	36"H x 30"W x 12"D ENCLOSURE	E69392	NITW
2	1	SAGINAW	SCE-36P30	SUB-PANEL	E69392	NITW
3	1	SAGINAW	SCE-HF2001A (RE-USE EXISTING)	SPACE HEATER	E358386	NITW2
4	1	SAGINAW	SCE-BVK	BREATHER VENT	E358386	NITW2
5	1	SAGINAW	SCE-ELMFK4SS6-OM	MOUNTING FEET	E69392	NITW
6	1	PHOENIX CONTACT	2907918 (PLT-SEC-T3-120-FM-UT)	SURGE SUPRESSOR	E330181	VZCA
7	1	SCHNEIDER ELECTRIC	M9F21120	20A CIRCUIT BREAKER	E90509	QVNU2
8	1	SCHNEIDER ELECTRIC	M9F21110	10A CIRCUIT BREAKER	E90509	QVNU2
9	2	PHOENIX CONTACT	2801512 (PT-IQ-1X2-EX-24DC-UT)	SURGE SUPPRESSOR FOR 4-20mA LOOPS	E138168	QVGQ
10	1	EATON/CUTLER-HAMMER	E34TPB120LWG06	30mm LED PILOT LIGHT - WHITE	E1230	NKCR
11	1	EATON/CUTLER-HAMMER	E34TPB120LGG06	30mm LED PILOT LIGHT - GREEN	E1230	NKCR
12	3	EATON/CUTLER-HAMMER	E34TPB120LRG06	30mm LED PILOT LIGHT - RED	E1230	NKCR
13	2	EATON/CUTLER-HAMMER	E34PB1-53X	30mm PUSHBUTTON	E1230	NKCR
14	1	EATON/CUTLER-HAMMER	E34VHBL1-2X	30mm 3-POSITION SWITCH	E1230	NKCR
15	1	EATON/CUTLER-HAMMER	E34GDB63LED06-1X	30mm EMERGENCY STOP PUSHBUTTON	E1230	NKCR
16	1	FINDER	60.12.8.120.0050	2-POLE RELAY, 120VAC COIL, (2) FORM C	E106390	NRNT2
17	1	FINDER	90.02	2-POLE RELAY SOCKET FOR 60 SERIES	E140923	SWIV
18	1	ALLEN-BRADLEY	1794-PS13	POWER SUPPLY	E65584	NRAQ2
19	1	ALLEN-BRADLEY	1794-AENTR	ETHERNET COMMUNICATION ADAPTER	E65584	NRAQ2
20	1	ALLEN-BRADLEY	1794-IA8	120VAC INPUT MODULE, 8 PT	E65584	NRAQ2
21	1	ALLEN-BRADLEY	1794-OW8	RELAY OUTPUT MODULE, 8 PT	E65584	NRAQ2
22	1	ALLEN-BRADLEY	1794-IF2XOF2I	ANALOG INPUT/OUTPUT MODULE, 2 PT/2 PT	E65584	NRAQ2
23	3	ALLEN-BRADLEY	1794-TB3	TERMINAL BASE	E65584	NRAQ2
24	1	PHOENIX CONTACT	2701554 (FL SWITCH 7006-2GC-EIP)	8 PORT MANAGED ETHERNET SWITCH	E140324	NKCR
25	1	PHOENIX CONTACT	2868651 STEP-PS/1AC/24DC/2.5	2.4 AMP POWER SUPPLY	E214596	QQGQ
26	30	PHOENIX CONTACT	3031364	TERMINAL BLOCKS	E60425	XCFR2
27	2	PHOENIX CONTACT	2891081 (FL-SFP-FX)	FIBER TRANSCEIVER CARTRIDGE, 100 Mbit, MULTIMODE, LC CONNECTOR	-	-

JITENDRA M. PATEL
STATE OF NEW YORK
075451
LICENSED PROFESSIONAL ENGINEER
10/15/21

jitu.patel Digitally signed by jitu.patel DN: CN=jitu.patel Date: 2021.10.15 11:03:01-04'00'

THE SIGNATURE AND SEAL OF THE UNDERSIGNED ON THIS DRAWING CERTIFIES THAT THE DESIGN INFORMATION CONTAINED IN THESE DRAWINGS ACCURATELY REFLECTS THE ORIGINAL DESIGN AND THE MATERIAL DESIGN CHANGES MADE DURING CONSTRUCTION, THAT WERE BROUGHT TO THE UNDERSIGNED'S ATTENTION. THESE DRAWINGS ARE INTENDED TO INCORPORATE ADDENDA, CHANGE ORDERS AND OTHER MATERIAL DESIGN CHANGES, BUT NOT NECESSARILY ALL SITE INSTRUCTIONS. THE UNDERSIGNED DOES NOT WARRANT OR GUARANTEE, NOR ACCEPT ANY RESPONSIBILITY FOR THE ACCURACY OR COMPLETENESS OF THE CONSTRUCTION RECORD INFORMATION SUPPLIED BY OTHERS CONTAINED IN THESE DRAWINGS, BUT DOES CERTIFY THAT THE CONSTRUCTION RECORD INFORMATION, IF ACCURATE AND COMPLETE, PROVIDES A SYSTEM WHICH SUBSTANTIALLY COMPLIES IN ALL MATERIAL RESPECTS WITH THE ORIGINAL DESIGN INTENT."

NO.	DATE	REVISIONS	BY	CHK
	10/15/21	RECORD DRAWINGS	SCP	REM

DRAWN: NJG	PROJECT NO: 3671797453
ENGINEER: REM	SCALE: NOT APPLICABLE
CHECKED: SCP	APPROVED: S. PEARSON
DATE: 10/04/19	DATE:

amec
AMEC E & E PC
214-25 42nd Ave
Bayside, New York 11361

LOCKHEED MARTIN CORPORATION,
FORMER UNISYS FACILITY,
LAKE SUCCESS, NEW YORK
OPERABLE UNITS NO. 1 & 2
EXTRACTION / RECOVERY WELL ELECTRICAL UPGRADES

INSTRUMENTATION

WELL RW-1RD
REMOTE CONTROL PANEL
BILL OF MATERIALS

EI-642

C:\Users\roger.riquier\Wood PLC\Lockheed Martin Great Neck - R.O. Drawings\Rev. Electrical Upgrade Design\Sheets\EI-642.dwg Thu, 14 Oct 2021 - 7:45am roger.riquier

UNAUTHORIZED ALTERATION OR ADDITION TO THIS DOCUMENT IS A VIOLATION OF SECTION 7209 OF THE NEW YORK STATE EDUCATION LAW.

FROM RW-1RD BREAKER PANEL CKT. 7 20A
LINE IN 120VAC/1ø/60HZ/20A

H
#12awg BLACK
CB1 (20amps)
N
G
#12awg WHITE
5
6
POWER LINE FILTER – SURGE ARRESTOR
1
2
3
4
L1
E-STOP
1
2
REMOVE JUMPER FOR ADDITIONAL E-STOPS AS REQUIRED
#16awg RED (TYP.)
ESR
(2)
C
(7)
EMERGENCY STOP RELAY
R
3
4
RUN BACK TO MCP-100
#14awg YELLOW
ILL-PUSHBUTTON PRESS TO TEST
W
120VAC POWER ON
HEATER
L1
N
200W
G
200W ENCLOSURE HEATER (FROM EXISTING PANEL)
CB2 (10amp)
9
INSTRUMENT POWER SUPPLY
L
N
24VDC
+
–
#16awg BLU/WHT
(24–)
111
(24+)
#16awg BLUE
CONTINUED ON D1026-11 (1794-IF2XOF2I)
#16awg BLU/WHT
112
(24–)
(24+)
#16awg BLUE
CONTINUED AT RIGHT (TBA)
POSITION 1
REMOTE I/O POWER SUPPLY
1794-PS13
C
(L1)
(N)
B
J
(+24)
(+24)
G
GND
I
(–24)
A
(–24)
H
#16awg BLUE
101
(24+)
102
(24–)
#16awg BLU/WHT
CONTINUED AT RIGHT (1794-AENTR)
#16awg BLU/WHT
104
(24–)
103
(24+)
#16awg BLUE
CONTINUED ON D1026-10 (1794-OW8)
L1
N1

CONTINUED ON EI-644

(8)
7
ESR
SPARE
(6)
8
#14awg YELLOW (TYP.)

CONTINUED FROM BELOW LEFT

101
(24+)
#16awg BLUE
102
(24–)
#16awg WHITE/BLUE
POSITION 2
ETHERNET COMMUNICATION ADAPTER
1794-AENTR
101
C
(+24)
(–24)
B
102
.440FLA
D
E
IP ADDRESS 192.168.100.117
ETHERNET CABLE
TO 1794-AENTR
111
(24+)
112
(COM)
ETHERNET SWITCH
FIBER OPTIC CABLE
FIBER OPTIC CABLE FROM RW-1RS PANEL
FIBER OPTIC CABLE FROM OU1 MCP-100 PANEL
FIBER OPTIC CABLE
SFP MODULE (TYP. 2)

STATE OF NEW YORK
JITUKUMAR M. PATEL
075491
LICENSED PROFESSIONAL ENGINEER
10/15/21
jitu.patel
Digitally signed by jitu.patel
DN: CN=jitu.patel
Date: 2021.10.15 11:03:24-04'00'

THE SIGNATURE AND SEAL OF THE UNDERSIGNED ON THIS DRAWING CERTIFIES THAT THE DESIGN INFORMATION CONTAINED IN THESE DRAWINGS ACCURATELY REFLECTS THE ORIGINAL DESIGN AND THE MATERIAL DESIGN CHANGES MADE DURING CONSTRUCTION, THAT WERE BROUGHT TO THE UNDERSIGNED'S ATTENTION. THESE DRAWINGS ARE INTENDED TO INCORPORATE ADDENDA, CHANGE ORDERS AND OTHER MATERIAL DESIGN CHANGES, BUT NOT NECESSARILY ALL SITE INSTRUCTIONS. THE UNDERSIGNED DOES NOT WARRANT OR GUARANTEE, NOR ACCEPT ANY RESPONSIBILITY FOR THE ACCURACY OR COMPLETENESS OF THE CONSTRUCTION RECORD INFORMATION SUPPLIED BY OTHERS CONTAINED IN THESE DRAWINGS, BUT DOES CERTIFY THAT THE CONSTRUCTION RECORD INFORMATION, IF ACCURATE AND COMPLETE, PROVIDES A SYSTEM WHICH SUBSTANTIALLY COMPLIES IN ALL MATERIAL RESPECTS WITH THE ORIGINAL DESIGN INTENT."

NO.	DATE	REVISIONS	BY	CHK
	10/15/21	RECORD DRAWINGS	SCP	REM

DRAWN: NJG	PROJECT NO: 3671797453
ENGINEER: REM	SCALE: NOT APPLICABLE
CHECKED: SCP	APPROVED: S. PEARSON
DATE: 10/04/19	DATE:

amec
AMEC E & E PC
214-25 42nd Ave
Bayside, New York 11361

LOCKHEED MARTIN CORPORATION,
FORMER UNISYS FACILITY,
LAKE SUCCESS, NEW YORK
OPERABLE UNITS NO. 1 & 2
EXTRACTION / RECOVERY WELL ELECTRICAL UPGRADES

INSTRUMENTATION

WELL RW-1RD
REMOTE CONTROL PANEL
POWER DISTRIBUTION SCHEMATIC

EI-643

C:\Users\roger.rquier\Wood PLC\Lockheed Martin Great Neck – 8.0_Drawings\Rev Electrical Upgrade Design\Sheets\EI-643.dwg Thu, 14 Oct 2021 – 7:45am roger.rquier

UNAUTHORIZED ALTERATION OR ADDITION TO THIS DOCUMENT IS A VIOLATION OF SECTION 7209 OF THE NEW YORK STATE EDUCATION LAW.

NOTE:

1. SEE SHEET EI-001 FOR LEGEND, ABBREVIATIONS, AND GENERAL NOTES.

CONTINUED FROM EI-643

POSITION 3
8 DIGITAL INPUT I/O MODULE
1794-IA8
WITH 1794-TB3 (BASE)

#16awg RED (TYPICAL)

C-34 (120V)

B-16 (N) → N1

RW-1RD SELECTOR SW. (HAND-OFF-AUTO)

L1 → 11 → (HAND) → A-0 — RW-1RD SELECTOR SWITCH IN HAND
C-35
B-17

L1 → 12 → (AUTO) → A-2 — RW-1RD SELECTOR SWITCH IN AUTO
C-37
B-19

ESR (1) (3) → 13 → A-4 — EMERGENCY STOP CONTACT
C-39
B-21

ALARM RESET → 14 → A-6 — ALARM RESET PUSHBUTTON
C-41
B-23

L1 → RED → LSH-510 (C) (NO) (CLOSE ON RISE) → BLK → 15 → A-8 — LSH-510 RW-1RD VAULT HIGH LEVEL SWITCH (EXISTING)
C-43
B-25

L1 → 16 → A-10 — SPARE
C-45
B-27

L1 → 17 → A-12 — SPARE
C-47
B-23

I/O RESET → 18 → A-14 — I/O RESET PUSHBUTTON
C-49
B-31

SIGNAL PASSES THROUGH PIPELINE PANEL TO MCP

143 → RED → RW-1RD LSHH (C) (NC) ((OPEN ON RISE) → WHT → I:O 410 → TO MCP-100 PANEL VIA PIPELINE PANEL

L1

N1

CONTINUED ABOVE RIGHT

CONTINUED FROM BELOW LEFT

POSITION 4
8 RELAY CONTACT I/O MODULE
1794-OW8
WITH 1794-TB3 (BASE)

34 → 103 24+
16 → 104 24-
CONTINUED FROM D1026-09

L1

A-0

A-1 — 19 — PUMP RUNNING PRESS TO TEST — G — N1 — PUMP P-510 RUNNING

A-2

A-3 — 20 — PUMP FAILURE PRESS TO TEST — R — PUMP P-510 FAILURE

A-4

A-5 — 21 — LOW FLOW PRESS TO TEST — R — PUMP P-510 LOW FLOW

A-6

A-7 — 22 — VAULT HIGH LEVEL PRESS TO TEST — R — RW-1RD VAULT HIGH LEVEL

A-8

A-9 — 23 — N1 — SPARE

A-10

A-11 — 24 — N1 — SPARE

A-12

A-13 — 25 — N1 — SPARE

A-14

A-15 — 26 — N1 — SPARE

N1



THE SIGNATURE AND SEAL OF THE UNDERSIGNED ON THIS DRAWING CERTIFIES THAT THE DESIGN INFORMATION CONTAINED IN THESE DRAWINGS ACCURATELY REFLECTS THE ORIGINAL DESIGN AND THE MATERIAL DESIGN CHANGES MADE DURING CONSTRUCTION, THAT WERE BROUGHT TO THE UNDERSIGNED'S ATTENTION. THESE DRAWINGS ARE INTENDED TO INCORPORATE ADDENDA, CHANGE ORDERS AND OTHER MATERIAL DESIGN CHANGES, BUT NOT NECESSARILY ALL SITE INSTRUCTIONS. THE UNDERSIGNED DOES NOT WARRANT OR GUARANTEE, NOR ACCEPT ANY RESPONSIBILITY FOR THE ACCURACY OR COMPLETENESS OF THE CONSTRUCTION RECORD INFORMATION SUPPLIED BY OTHERS CONTAINED IN THESE DRAWINGS, BUT DOES CERTIFY THAT THE CONSTRUCTION RECORD INFORMATION, IF ACCURATE AND COMPLETE, PROVIDES A SYSTEM WHICH SUBSTANTIALLY COMPLIES IN ALL MATERIAL RESPECTS WITH THE ORIGINAL DESIGN INTENT.*

NO.	DATE	REVISIONS	BY	CHK
	9/03/21	RECORD DRAWINGS	SCP	REM

DRAWN: NJG	PROJECT NO: 3617187443
ENGINEER: REM	SCALE: NOT APPLICABLE
CHECKED: SCP	APPROVED: S. PEARSOM
DATE: 4/30/20	DATE:

amec
AMEC E & E PC
214-25 42nd Ave
Bayside, New York 11361

LOCKHEED MARTIN CORPORATION,
FORMER UNISYS FACILITY,
LAKE SUCCESS, NEW YORK
OPERABLE UNITS NO. 1 & 2
EXTRACTION / RECOVERY WELL ELECTRICAL UPGRADES

INSTRUMENTATION
WELL RW-1RD
REMOTE CONTROL PANEL
DIGITAL I/O SCHEMATIC

EI-644

G:\Users\roger.rigler\Wood PLC\Lockheed Martin Great Neck - B.O. Drawings\Rev Electrical Upgrade Design\Sheets\EI-644.dwg Wed, 01 Sep 2021 - 1:37pm roger.rigler

UNAUTHORIZED ALTERATION OR ADDITION TO THIS DOCUMENT IS A VIOLATION OF SECTION 7209 OF THE NEW YORK STATE EDUCATION LAW.

NOTE:

1. SEE SHEET EI-001 FOR LEGEND, ABBREVIATIONS, AND GENERAL NOTES.

CONTINUED FROM EI-644

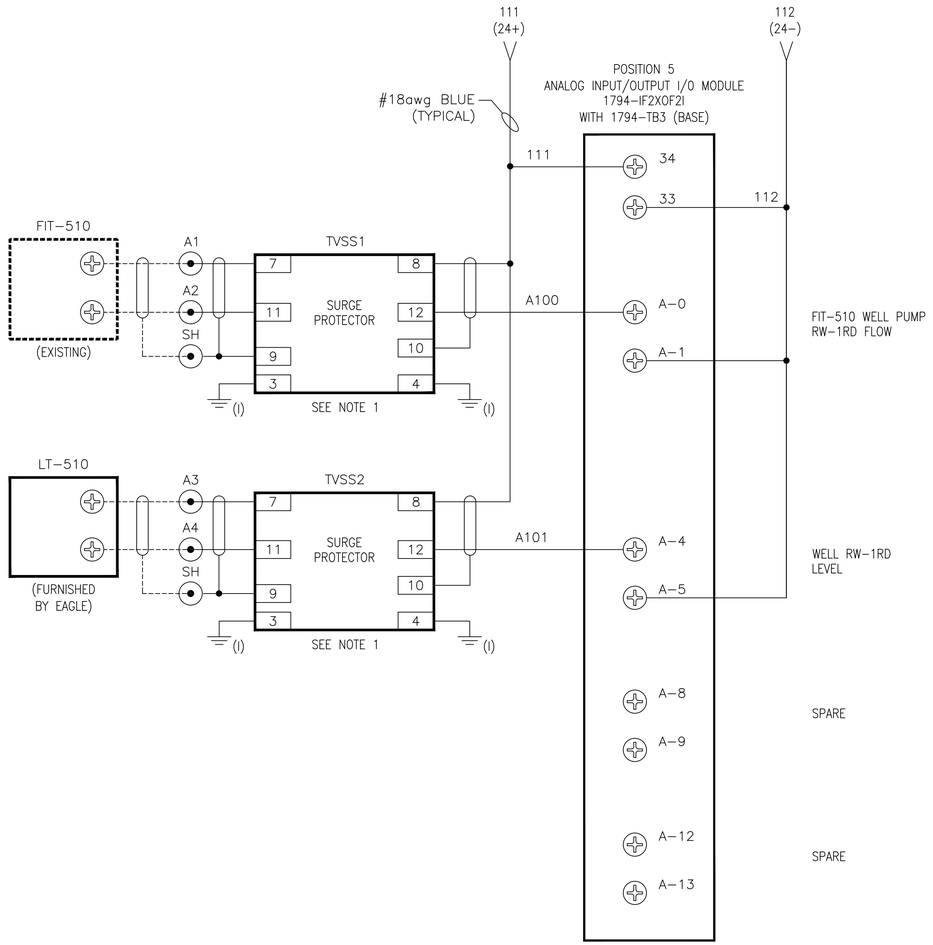

THE SIGNATURE AND SEAL OF THE UNDERSIGNED ON THIS DRAWING CERTIFIES THAT THE DESIGN INFORMATION CONTAINED IN THESE DRAWINGS ACCURATELY REFLECTS THE ORIGINAL DESIGN AND THE MATERIAL DESIGN CHANGES MADE DURING CONSTRUCTION, THAT WERE BROUGHT TO THE UNDERSIGNED'S ATTENTION. THESE DRAWINGS ARE INTENDED TO INCORPORATE ADDENDA, CHANGE ORDERS AND OTHER MATERIAL DESIGN CHANGES, BUT NOT NECESSARILY ALL SITE INSTRUCTIONS. THE UNDERSIGNED DOES NOT WARRANT OR GUARANTEE, NOR ACCEPT ANY RESPONSIBILITY FOR THE ACCURACY OR COMPLETENESS OF THE CONSTRUCTION RECORD INFORMATION SUPPLIED BY OTHERS CONTAINED IN THESE DRAWINGS, BUT DOES CERTIFY THAT THE CONSTRUCTION RECORD INFORMATION, IF ACCURATE AND COMPLETE, PROVIDES A SYSTEM WHICH SUBSTANTIALLY COMPLIES IN ALL MATERIAL RESPECTS WITH THE ORIGINAL DESIGN INTENT."

STATE OF NEW YORK
JITENDRA M. PATEL
078431
LICENSED PROFESSIONAL ENGINEER
9/1/21

jitu.patel Digitally signed by jitu.patel DN: CN=jitu.patel Date: 2021.09.01 17:38:22-04'00'

NO.	DATE	REVISIONS	BY	CHK
	9/03/21	RECORD DRAWINGS	SCP	REM

DRAWN: NJG	PROJECT NO: 3617187443
ENGINEER:	SCALE: AS NOTED
CHECKED:	APPROVED:
DATE:	DATE:

amec
AMEC E & E PC
214-25 42nd Ave
Bayside, New York 11361

LOCKHEED MARTIN CORPORATION,
FORMER UNISYS FACILITY,
LAKE SUCCESS, NEW YORK
OPERABLE UNITS NO. 1 & 2
EXTRACTION / RECOVERY WELL ELECTRICAL UPGRADES

INSTRUMENTATION
WELL RW-1RD
REMOTE CONTROL PANEL
ANALOG I/O SCHEMATIC

EI-645

C:\Users\roger.riguler\Wood PLC\Lockheed Martin Great Neck - 8.0_Drawings\Rev Electrical Upgrade Design\Sheets\EI-645.dwg Wed, 01 Sep 2021 - 1:37pm roger.riguler

UNAUTHORIZED ALTERATION OR ADDITION TO THIS DOCUMENT IS A VIOLATION OF SECTION 7209 OF THE NEW YORK STATE EDUCATION LAW.

NOTE:

1. SEE SHEET EI-001 FOR LEGEND, ABBREVIATIONS, AND GENERAL NOTES.

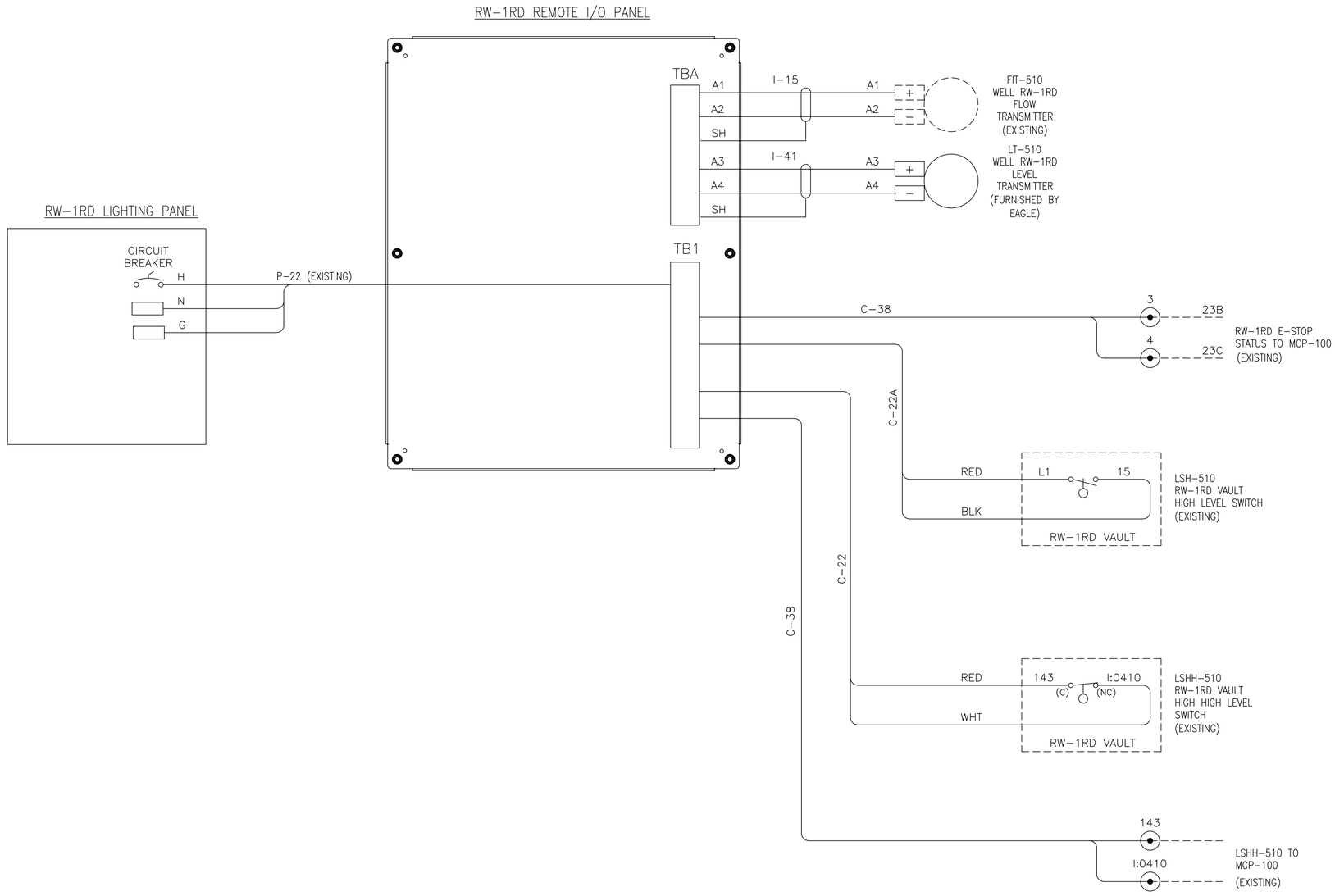



jitu.patel Digitally signed by jitu.patel DN: CN=jitu.patel Date: 2021.09.01 17:28:38-04'00'

THE SIGNATURE AND SEAL OF THE UNDERSIGNED ON THIS DRAWING CERTIFIES THAT THE DESIGN INFORMATION CONTAINED IN THESE DRAWINGS ACCURATELY REFLECTS THE ORIGINAL DESIGN AND THE MATERIAL DESIGN CHANGES MADE DURING CONSTRUCTION, THAT WERE BROUGHT TO THE UNDERSIGNED'S ATTENTION. THESE DRAWINGS ARE INTENDED TO INCORPORATE ADDENDA, CHANGE ORDERS AND OTHER MATERIAL DESIGN CHANGES, BUT NOT NECESSARILY ALL SITE INSTRUCTIONS. THE UNDERSIGNED DOES NOT WARRANT OR GUARANTEE, NOR ACCEPT ANY RESPONSIBILITY FOR THE ACCURACY OR COMPLETENESS OF THE CONSTRUCTION RECORD INFORMATION SUPPLIED BY OTHERS CONTAINED IN THESE DRAWINGS, BUT DOES CERTIFY THAT THE CONSTRUCTION RECORD INFORMATION, IF ACCURATE AND COMPLETE, PROVIDES A SYSTEM WHICH SUBSTANTIALLY COMPLIES IN ALL MATERIAL RESPECTS WITH THE ORIGINAL DESIGN INTENT."

NO.	DATE	REVISIONS	BY	CHK
	9/03/21	RECORD DRAWINGS	SCP	REM

DRAWN: NJG	PROJECT NO: 3617187443
ENGINEER:	SCALE: AS NOTED
CHECKED:	APPROVED:
DATE:	DATE:

amec
AMEC E & E PC
214-25 42nd Ave
Bayside, New York 11361

LOCKHEED MARTIN CORPORATION,
FORMER UNISYS FACILITY,
LAKE SUCCESS, NEW YORK
OPERABLE UNITS NO. 1 & 2
EXTRACTION / RECOVERY WELL ELECTRICAL UPGRADES

INSTRUMENTATION
WELL RW-1RD
REMOTE CONTROL PANEL
INTERCONNECTION WIRING DIAGRAM

EI-646

C:\Users\roger.rigular.Wood PLC\Lockheed Martin Great Neck - B.O. Drawings\Rev. Electrical Upgrade Design\Sheets\EI-646.dwg Wed, 01 Sep 2021 - 1:37pm roger.rigular

UNAUTHORIZED ALTERATION OR ADDITION TO THIS DOCUMENT IS A VIOLATION OF SECTION 7209 OF THE NEW YORK STATE EDUCATION LAW.

NOTE:

1. SEE SHEET EI-001 FOR LEGEND, ABBREVIATIONS, AND GENERAL NOTES.
2. REPLACED CONTROL PANEL WITH NEW 316L STAINLESS STEEL ENCLOSURE. REPLACED ALL LIGHTS, SWITCHES, AND LABELS ON PANEL FRONT.
3. REUSED PANEL BACKBOARD IN NEW PANEL.
4. REMOVED ETHERNET SWITCH AND FIBER OPTIC MEDIA CONVERTERS.
5. INSTALLED NEW 24 VDC POWER SUPPLY, ETHERNET SWITCH, DIN RAIL, & END CLAMPS.
6. SEE DRAWING EI-662 FOR BILL OF MATERIALS.

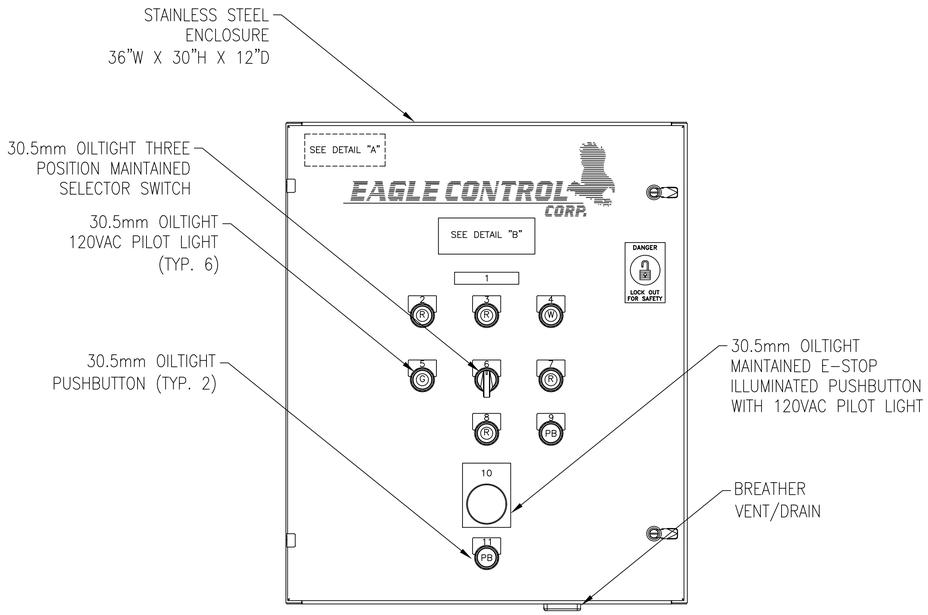

FRONT PANEL ARRANGEMENT

SCALE 3/16" = 1"

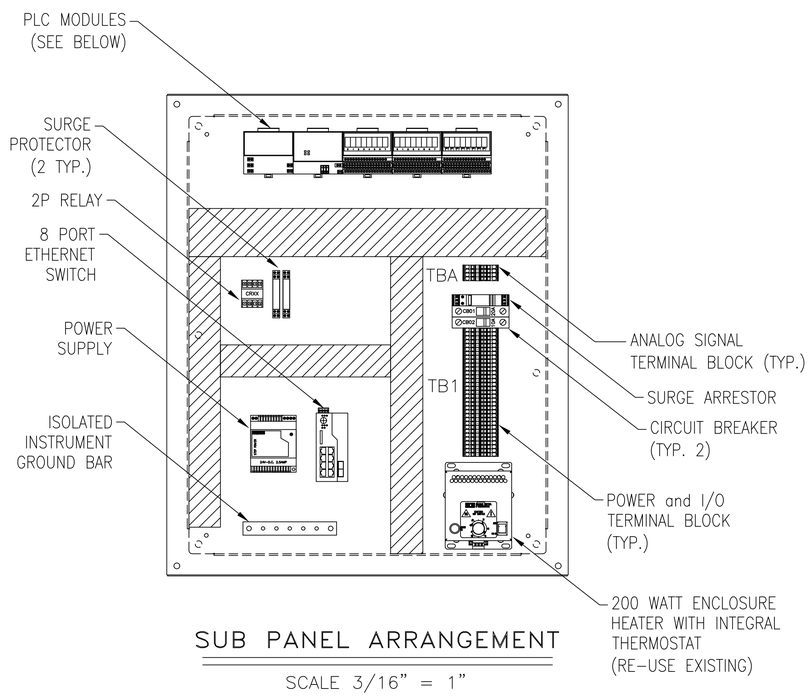

SUB PANEL ARRANGEMENT

SCALE 3/16" = 1"

NAMEPLATE DETAIL "A"

EAGLE CONTROL CORPORATION
23 OLD DOCK ROAD
YAPHANK, NY 11980
TEL: (631)924-1315

WELL EW-1R
REMOTE CONTROL
EAGLE ORDER No. 1026

(NO SCALE)

NAMEPLATE DETAIL "B"

CONTROL PANEL ELECTRICAL DATA

	LINE VOLTAGE	120VAC/1PH, 60HZ
○	FLA	10 ○
	PRIMARY FUSING	20A, CB
	SCCR	5KA

(NO SCALE – 2"H x 4"W)

NAMEPLATE SCHEDULE

NP #	QTY	NAMEPLATE INSCRIPTION	SIZE / (LENS)	NP #	QTY	NAMEPLATE INSCRIPTION	SIZE / (LENS)
1	1	EW-1R	.75"H x 4"W	7	1	PUMP FAILURE	30.5mm
2	1	EW-1 VAULT HIGH LEVEL	30.5mm	8	1	LOW FLOW	30.5mm
3	1	EW-1R VAULT HIGH LEVEL	30.5mm	9	1	ALARM RESET	30.5mm
4	1	120VAC POWER	30.5mm	10	1	PUSH TO STOP – PULL TO START	2.5"H x 2.5"W
5	1	PUMP RUNNING	30.5mm	11	1	I/O RESET	30.5mm
6	1	HAND – OFF – AUTO	30.5mm				

PLC MODULE DETAIL

POS. #	MODULE
1	POWER SUPPLY
2	ETHERNET COMMUNICATION ADAPTER
3	8 DIGITAL INPUTS
4	8 ISOLATED N.O. RELAY CONTACTS
5	2 ISOLATED ANALOG INPUTS, 2 OUTPUTS, 24VDC

TERMINAL BLOCK LAYOUT

TBA	TB1	TB1	
A1	H	15	
A2	N	16	
SH	N1	17	
A3	N1	24	
A4	N1	25	
SH	G	26	
	L1	143	TERMINALS PROVIDED FOR LSHH TO MCP-100
	L1	143A	
	L1	143B	
	L1	I:0412	
	1	G	EQUIPMENT GROUNDS
	2	G	
	3	G	
	4	G	
	5	G	
	6	G	
	7		
	8		



THE SIGNATURE AND SEAL OF THE UNDERSIGNED ON THIS DRAWING CERTIFIES THAT THE DESIGN INFORMATION CONTAINED IN THESE DRAWINGS ACCURATELY REFLECTS THE ORIGINAL DESIGN AND THE MATERIAL DESIGN CHANGES MADE DURING CONSTRUCTION, THAT WERE BROUGHT TO THE UNDERSIGNED'S ATTENTION. THESE DRAWINGS ARE INTENDED TO INCORPORATE ADDENDA, CHANGE ORDERS AND OTHER MATERIAL DESIGN CHANGES, BUT NOT NECESSARILY ALL SITE INSTRUCTIONS. THE UNDERSIGNED DOES NOT WARRANT OR GUARANTEE, NOR ACCEPT ANY RESPONSIBILITY FOR THE ACCURACY OR COMPLETENESS OF THE CONSTRUCTION RECORD INFORMATION SUPPLIED BY OTHERS CONTAINED IN THESE DRAWINGS, BUT DOES CERTIFY THAT THE CONSTRUCTION RECORD INFORMATION, IF ACCURATE AND COMPLETE, PROVIDES A SYSTEM WHICH SUBSTANTIALLY COMPLIES IN ALL MATERIAL RESPECTS WITH THE ORIGINAL DESIGN INTENT."

NO.	DATE	REVISIONS	BY	CHK
	9/03/21	RECORD DRAWINGS	SCP	REM

DRAWN: NJG
ENGINEER: REM
CHECKED: SCP
DATE: 10/04/19
PROJECT NO: 3671797453
SCALE: NOT APPLICABLE
APPROVED: S. PEARSON
DATE:

amec
AMEC E & E PC
214-25 42nd Ave
Bayside, New York 11361

LOCKHEED MARTIN CORPORATION,
FORMER UNISYS FACILITY,
LAKE SUCCESS, NEW YORK
OPERABLE UNITS NO. 1 & 2
EXTRACTION / RECOVERY WELL ELECTRICAL UPGRADES

INSTRUMENTATION
WELL EW-1R
REMOTE CONTROL PANEL
PANEL LAYOUT

EI-661

C:\Users\roger.rijuler\Wood PLC\Lockheed Martin Great Neck - R &D_Drawings\Rev Electrical Upgrade Design\Sheets\EI-661.dwg Wed, 01 Sep 2021 - 1:38pm roger.rijuler

UNAUTHORIZED ALTERATION OR ADDITION TO THIS DOCUMENT IS A VIOLATION OF SECTION 7209 OF THE NEW YORK STATE EDUCATION LAW.

LOCKHEED MARTIN CORPORATION
OPERABLE UNITS 1 & 2 ELECTRICAL UPGRADES

REMOTE I/O PANEL BILL OF MATERIALS

ITEM No.	QTY.	MANUFACTURER	PART NUMBER	DESCRIPTION	U.L. FILE No.	U.L. CCN
1	1	SAGINAW	SCE-36EL3012SS6LP	36"H x 30"W x 12"D ENCLOSURE	E69392	NITW
2	1	SAGINAW	SCE-36P30	SUB-PANEL	E69392	NITW
3	1	SAGINAW	SCE-HF2001A (RE-USE EXISTING)	SPACE HEATER	E358386	NITW2
4	1	SAGINAW	SCE-BVK	BREATHER VENT	E358386	NITW2
5	1	SAGINAW	SCE-ELMFK4SS6-OM	MOUNTING FEET	E69392	NITW
6	1	PHOENIX CONTACT	2907918 (PLT-SEC-T3-120-FM-UT)	SURGE SUPRESSOR	E330181	VZCA
7	1	SCHNEIDER ELECTRIC	M9F21120	20A CIRCUIT BREAKER	E90509	QVNU2
8	1	SCHNEIDER ELECTRIC	M9F21110	10A CIRCUIT BREAKER	E90509	QVNU2
9	2	PHOENIX CONTACT	2801512 (PT-IQ-1X2-EX-24DC-UT)	SURGE SUPPRESSOR FOR 4-20mA LOOPS	E138168	QVGQ
10	1	EATON/CUTLER-HAMMER	E34TPB120LWG06	30mm LED PILOT LIGHT - WHITE	E1230	NKCR
11	1	EATON/CUTLER-HAMMER	E34TPB120LGG06	30mm LED PILOT LIGHT - GREEN	E1230	NKCR
12	3	EATON/CUTLER-HAMMER	E34TPB120LRG06	30mm LED PILOT LIGHT - RED	E1230	NKCR
13	2	EATON/CUTLER-HAMMER	E34PB1-53X	30mm PUSHBUTTON	E1230	NKCR
14	1	EATON/CUTLER-HAMMER	E34VHBL1-2X	30mm 3-POSITION SWITCH	E1230	NKCR
15	1	EATON/CUTLER-HAMMER	E34GDB63LED06-1X	30mm EMERGENCY STOP PUSHBUTTON	E1230	NKCR
16	1	FINDER	60.12.8.120.0050	2-POLE RELAY, 120VAC COIL, (2) FORM C	E106390	NRNT2
17	1	FINDER	90.02	2-POLE RELAY SOCKET FOR 60 SERIES	E140923	SWIV
18	1	ALLEN-BRADLEY	1794-PS13	POWER SUPPLY	E65584	NRAQ2
19	1	ALLEN-BRADLEY	1794-AENTR	ETHERNET COMMUNICATION ADAPTER	E65584	NRAQ2
20	1	ALLEN-BRADLEY	1794-IA8	120VAC INPUT MODULE, 8 PT	E65584	NRAQ2
21	1	ALLEN-BRADLEY	1794-OW8	RELAY OUTPUT MODULE, 8 PT	E65584	NRAQ2
22	1	ALLEN-BRADLEY	1794-IF2XOF2I	ANALOG INPUT/OUTPUT MODULE, 2 PT/2 PT	E65584	NRAQ2
23	3	ALLEN-BRADLEY	1794-TB3	TERMINAL BASE	E65584	NRAQ2
24	1	PHOENIX CONTACT	2701554 (FL SWITCH 7006-2GC-EIP)	8 PORT MANAGED ETHERNET SWITCH	E140324	NKCR
25	1	PHOENIX CONTACT	2868651 STEP-PS/1AC/24DC/2.5	2.4 AMP POWER SUPPLY	E214596	QQGQ
26	30	PHOENIX CONTACT	3031364	TERMINAL BLOCKS	E60425	XCFR2
27	2	PHOENIX CONTACT	2891081 (FL-SFP-FX)	FIBER TRANSCEIVER CARTRIDGE, 100 Mbit, MULTIMODE, LC CONNECTOR	-	-

STATE OF NEW YORK
JITENDRA M. PATEL
075451
LICENSED PROFESSIONAL ENGINEER
10/15/21

jitu.patel Digitally signed by jitu.patel
DN: CN=jitu.patel
Date: 2021.10.15 11:03:46-04'00'

THE SIGNATURE AND SEAL OF THE UNDERSIGNED ON THIS DRAWING CERTIFIES THAT THE DESIGN INFORMATION CONTAINED IN THESE DRAWINGS ACCURATELY REFLECTS THE ORIGINAL DESIGN AND THE MATERIAL DESIGN CHANGES MADE DURING CONSTRUCTION, THAT WERE BROUGHT TO THE UNDERSIGNED'S ATTENTION. THESE DRAWINGS ARE INTENDED TO INCORPORATE ADDENDA, CHANGE ORDERS AND OTHER MATERIAL DESIGN CHANGES, BUT NOT NECESSARILY ALL SITE INSTRUCTIONS. THE UNDERSIGNED DOES NOT WARRANT OR GUARANTEE, NOR ACCEPT ANY RESPONSIBILITY FOR THE ACCURACY OR COMPLETENESS OF THE CONSTRUCTION RECORD INFORMATION SUPPLIED BY OTHERS CONTAINED IN THESE DRAWINGS, BUT DOES CERTIFY THAT THE CONSTRUCTION RECORD INFORMATION, IF ACCURATE AND COMPLETE, PROVIDES A SYSTEM WHICH SUBSTANTIALLY COMPLIES IN ALL MATERIAL RESPECTS WITH THE ORIGINAL DESIGN INTENT."

NO.	DATE	REVISIONS	BY	CHK
	10/15/21	RECORD DRAWINGS	SCP	REM

DRAWN: NJG	PROJECT NO: 3671797453
ENGINEER: REM	SCALE: NOT APPLICABLE
CHECKED: SCP	APPROVED: S. PEARSON
DATE: 10/04/19	DATE:

amec
AMEC E & E PC
214-25 42nd Ave
Bayside, New York 11361

LOCKHEED MARTIN CORPORATION,
FORMER UNISYS FACILITY,
LAKE SUCCESS, NEW YORK
OPERABLE UNITS NO. 1 & 2
EXTRACTION / RECOVERY WELL ELECTRICAL UPGRADES

INSTRUMENTATION

WELL EW-1R
REMOTE CONTROL PANEL
BILL OF MATERIALS

EI-662

C:\Users\roger.rigler\Wood PLC\Lockheed Martin Great Neck - 8.0_Drawings\Rev. Electrical Upgrade Design\Sheets\EI-662.dwg Thu, 14 Oct 2021 - 7:45am roger.rigler

UNAUTHORIZED ALTERATION OR ADDITION TO THIS DOCUMENT IS A VIOLATION OF SECTION 7209 OF THE NEW YORK STATE EDUCATION LAW.

C:\Users\roger.riquier\Wood PLC\Lockheed Martin Great Neck - 8.0_Drawings\Rev Electrical Upgrade Design\Sheets\EI-663.dwg Thu, 14 Oct 2021 - 7:45am roger.riquier

FROM EW-1R BREAKER PANEL CKT. 1 20A
LINE IN 120VAC/1ø/60HZ/20A

H
#12awg BLACK
CB1 (20amps)
N
G
#12awg WHITE
5
6
POWER LINE FILTER – SURGE ARRESTOR
1
2
3
4
L1
E-STOP
1
2
REMOVE JUMPER FOR ADDITIONAL E-STOPS AS REQUIRED
#16awg RED (TYP.)
ESR
(2)
C
(7)
EMERGENCY STOP RELAY
R
3
4
RUN BACK TO MCP-100
#14awg YELLOW
ILL-PUSHBUTTON PRESS TO TEST
W
120VAC POWER ON
HEATER
L1
N
200W
G
200W ENCLOSURE HEATER (FROM EXISTING PANEL)
CB2 (10amp)
9
INSTRUMENT POWER SUPPLY
L
N
24VDC
+
–
#16awg BLU/WHT
(24–)
CONTINUED ON D1026-17 (1794-IF2XOF2I)
111
(24+)
#16awg BLUE
#16awg BLU/WHT
112
(24–)
CONTINUED AT RIGHT (TBA)
(24+)
#16awg BLUE
POSITION 1
REMOTE I/O POWER SUPPLY
1794-PS13
C
(L1)
(N)
B
J
(+24)
(+24)
G
GND
I
(–24)
A
(–24)
H
#16awg BLUE
101
(24+)
CONTINUED AT RIGHT (1794-AENTR)
102
(24–)
#16awg BLU/WHT
#16awg BLU/WHT
104
(24–)
CONTINUED ON D1026-16 (1794-OW8)
103
(24+)
#16awg BLUE
L1
N1
CONTINUED ON EI-664

(8)
7
SPARE
ESR
(6)
8
#14awg YELLOW (TYP.)

CONTINUED FROM BELOW LEFT

101 (24+)
#16awg BLUE
102 (24–)
#16awg WHITE/BLUE
POSITION 2
ETHERNET COMMUNICATION ADAPTER
1794-AENTR
101
C
(+24)
(–24)
B
102
.440FLA
D
E
IP ADDRESS 192.168.100.115
ETHERNET CABLE
TO 1794-AENTR
111 (24+)
112 (COM)
ETHERNET SWITCH
FIBER OPTIC CABLE
FIBER OPTIC CABLE FROM RW-3 PANEL
FIBER OPTIC CABLE FROM RW-1RS PANEL
FIBER OPTIC CABLE
SFP MODULE (TYP. 2)

THE SIGNATURE AND SEAL OF THE UNDERSIGNED ON THIS DRAWING CERTIFIES THAT THE DESIGN INFORMATION CONTAINED IN THESE DRAWINGS ACCURATELY REFLECTS THE ORIGINAL DESIGN AND THE MATERIAL DESIGN CHANGES MADE DURING CONSTRUCTION, THAT WERE BROUGHT TO THE UNDERSIGNED'S ATTENTION. THESE DRAWINGS ARE INTENDED TO INCORPORATE ADDENDA, CHANGE ORDERS AND OTHER MATERIAL DESIGN CHANGES, BUT NOT NECESSARILY ALL SITE INSTRUCTIONS. THE UNDERSIGNED DOES NOT WARRANT OR GUARANTEE, NOR ACCEPT ANY RESPONSIBILITY FOR THE ACCURACY OR COMPLETENESS OF THE CONSTRUCTION RECORD INFORMATION SUPPLIED BY OTHERS CONTAINED IN THESE DRAWINGS, BUT DOES CERTIFY THAT THE CONSTRUCTION RECORD INFORMATION, IF ACCURATE AND COMPLETE, PROVIDES A SYSTEM WHICH SUBSTANTIALLY COMPLIES IN ALL MATERIAL RESPECTS WITH THE ORIGINAL DESIGN INTENT."

STATE OF NEW YORK
JITUKUMAR M. PATEL
075491
LICENSED PROFESSIONAL ENGINEER
10/15/21
jitu.patel Digitally signed by jitu.patel DN: CN=jitu.patel Date: 2021.10.15 11:04:09-04'00'

NO.	DATE	REVISIONS	BY	CHK
	10/15/21	RECORD DRAWINGS	SCP	REM

DRAWN: NJG	PROJECT NO: 3671797453
ENGINEER: REM	SCALE: NOT APPLICABLE
CHECKED: SCP	APPROVED: S. PEARSON
DATE: 10/04/19	DATE:

amec
AMEC E & E PC
214-25 42nd Ave
Bayside, New York 11361

LOCKHEED MARTIN CORPORATION,
FORMER UNISYS FACILITY,
LAKE SUCCESS, NEW YORK
OPERABLE UNITS NO. 1 & 2
EXTRACTION / RECOVERY WELL ELECTRICAL UPGRADES

INSTRUMENTATION

WELL EW-1R
REMOTE CONTROL PANEL
POWER DISTRIBUTION SCHEMATIC

EI-663

UNAUTHORIZED ALTERATION OR ADDITION TO THIS DOCUMENT IS A VIOLATION OF SECTION 7209 OF THE NEW YORK STATE EDUCATION LAW.

NOTE:

1. SEE SHEET EI-001 FOR LEGEND, ABBREVIATIONS, AND GENERAL NOTES.

CONTINUED FROM EI-663

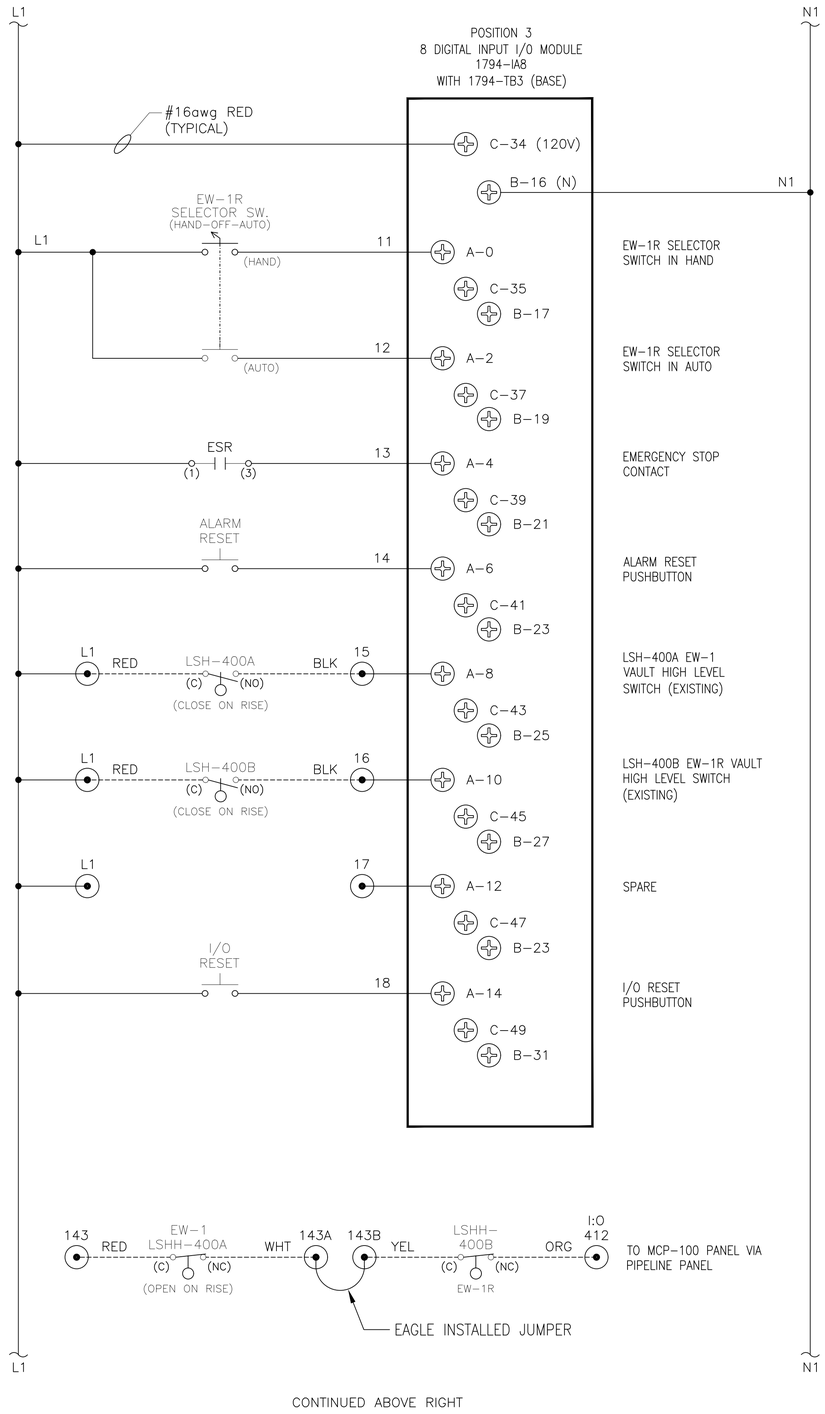

CONTINUED ABOVE RIGHT

CONTINUED FROM BELOW LEFT

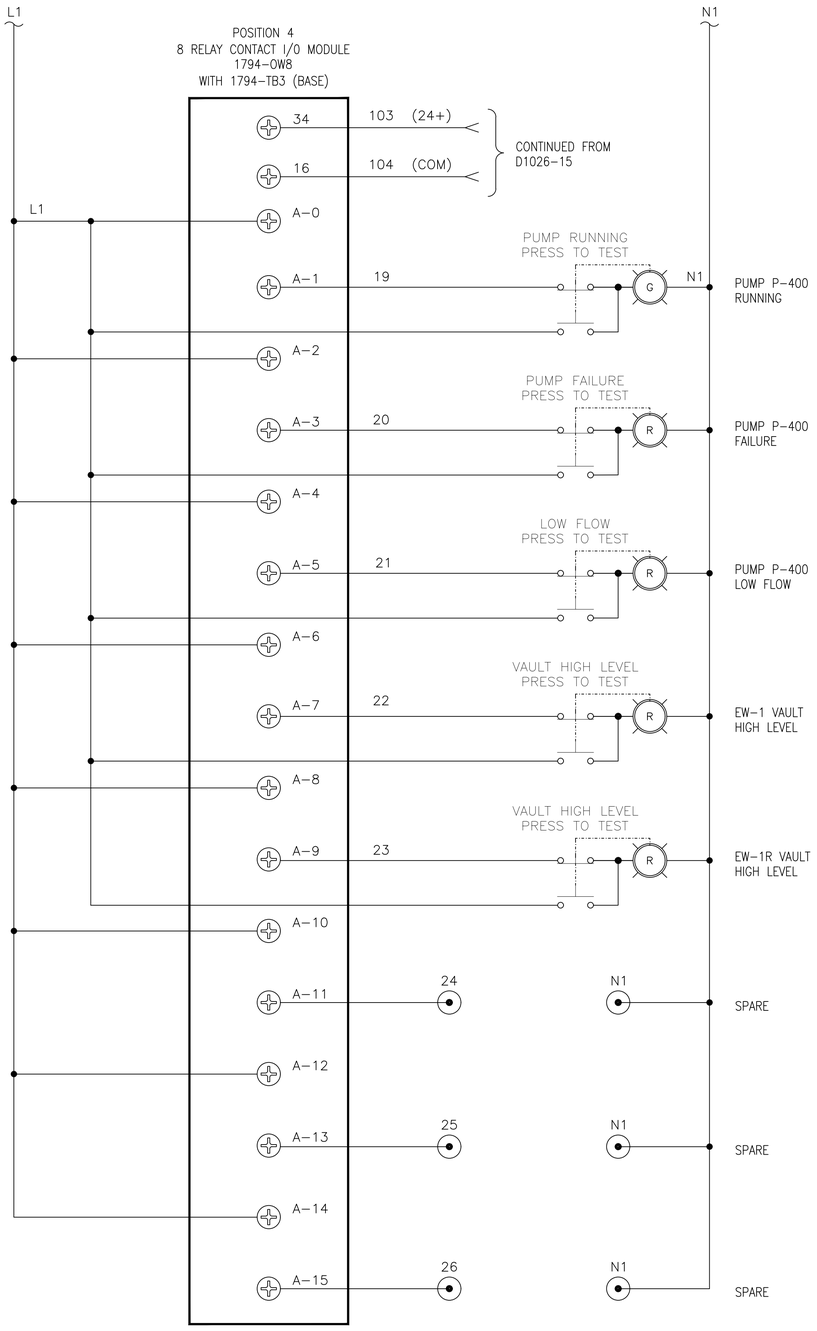



jitu.patel Digitally signed by jitu.patel DN: CN=jitu.patel Date: 2021.09.01 17:29:43-04'00'

THE SIGNATURE AND SEAL OF THE UNDERSIGNED ON THIS DRAWING CERTIFIES THAT THE DESIGN INFORMATION CONTAINED IN THESE DRAWINGS ACCURATELY REFLECTS THE ORIGINAL DESIGN AND THE MATERIAL DESIGN CHANGES MADE DURING CONSTRUCTION, THAT WERE BROUGHT TO THE UNDERSIGNED'S ATTENTION. THESE DRAWINGS ARE INTENDED TO INCORPORATE ADDENDA, CHANGE ORDERS AND OTHER MATERIAL DESIGN CHANGES, BUT NOT NECESSARILY ALL SITE INSTRUCTIONS. THE UNDERSIGNED DOES NOT WARRANT OR GUARANTEE, NOR ACCEPT ANY RESPONSIBILITY FOR THE ACCURACY OR COMPLETENESS OF THE CONSTRUCTION RECORD INFORMATION SUPPLIED BY OTHERS CONTAINED IN THESE DRAWINGS, BUT DOES CERTIFY THAT THE CONSTRUCTION RECORD INFORMATION, IF ACCURATE AND COMPLETE, PROVIDES A SYSTEM WHICH SUBSTANTIALLY COMPLIES IN ALL MATERIAL RESPECTS WITH THE ORIGINAL DESIGN INTENT."

NO.	DATE	REVISIONS	BY	CHK
	9/03/21	RECORD DRAWINGS	SCP	REM

DRAWN: BRT	PROJECT NO: 3617187443
ENGINEER: REM	SCALE: NOT APPLICABLE
CHECKED: SCP	APPROVED: S. PEARSON
DATE: 4/30/20	DATE:

amec
AMEC E & E PC
214-25 42nd Ave
Bayside, New York 11361

LOCKHEED MARTIN CORPORATION,
FORMER UNISYS FACILITY,
LAKE SUCCESS, NEW YORK
OPERABLE UNITS NO. 1 & 2
EXTRACTION / RECOVERY WELL ELECTRICAL UPGRADES

INSTRUMENTATION
WELL EW-1R
REMOTE CONTROL PANEL
DIGITAL I/O SCHEMATIC

EI-664

C:\Users\roger.rajan\Wood PLC\Lockheed Martin Great Neck - 8.0_Drawings\Rev Electrical Upgrade Design\Sheets\EI-664.dwg Wed, 01 Sep 2021 - 1:38pm roger.rajan

UNAUTHORIZED ALTERATION OR ADDITION TO THIS DOCUMENT IS A VIOLATION OF SECTION 7209 OF THE NEW YORK STATE EDUCATION LAW.

NOTE:

1. SEE SHEET EI-001 FOR LEGEND, ABBREVIATIONS, AND GENERAL NOTES.

CONTINUED FROM EI-664

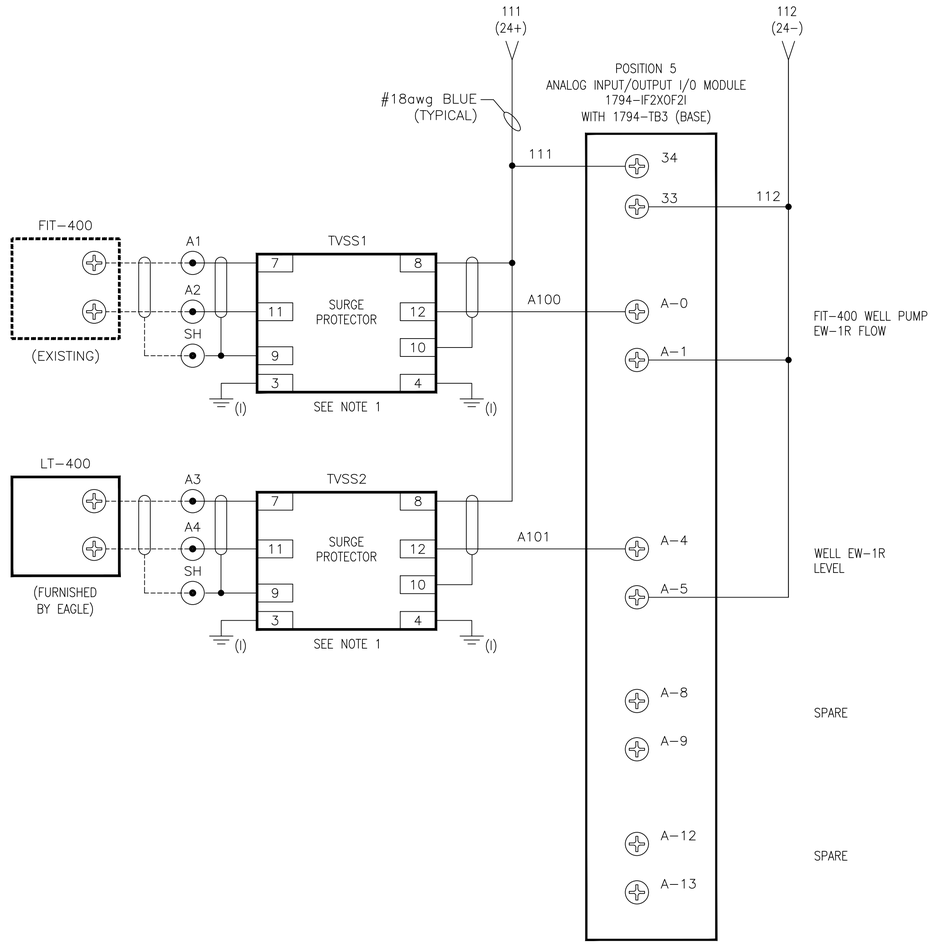

THE SIGNATURE AND SEAL OF THE UNDERSIGNED ON THIS DRAWING CERTIFIES THAT THE DESIGN INFORMATION CONTAINED IN THESE DRAWINGS ACCURATELY REFLECTS THE ORIGINAL DESIGN AND THE MATERIAL DESIGN CHANGES MADE DURING CONSTRUCTION, THAT WERE BROUGHT TO THE UNDERSIGNED'S ATTENTION. THESE DRAWINGS ARE INTENDED TO INCORPORATE ADDENDA, CHANGE ORDERS AND OTHER MATERIAL DESIGN CHANGES, BUT NOT NECESSARILY ALL SITE INSTRUCTIONS. THE UNDERSIGNED DOES NOT WARRANT OR GUARANTEE, NOR ACCEPT ANY RESPONSIBILITY FOR THE ACCURACY OR COMPLETENESS OF THE CONSTRUCTION RECORD INFORMATION SUPPLIED BY OTHERS CONTAINED IN THESE DRAWINGS, BUT DOES CERTIFY THAT THE CONSTRUCTION RECORD INFORMATION, IF ACCURATE AND COMPLETE, PROVIDES A SYSTEM WHICH SUBSTANTIALLY COMPLIES IN ALL MATERIAL RESPECTS WITH THE ORIGINAL DESIGN INTENT."

STATE OF NEW YORK
JITENDRA M. PATEL
075431
LICENSED PROFESSIONAL ENGINEER
9/1/21

jitu.patel Digitally signed by jitu.patel DN: CN=jitu.patel Date: 2021.09.01 17:29:58-04'00'

NO.	DATE	REVISIONS	BY	CHK
	9/03/21	RECORD DRAWINGS	SCP	REM

DRAWN: BRT	PROJECT NO: 3617187443
ENGINEER: REM	SCALE: NOT APPLICABLE
CHECKED: SCP	APPROVED: S. PEARSON
DATE: 4/30/20	DATE:

amec
AMEC E & E PC
214-25 42nd Ave
Bayside, New York 11361

LOCKHEED MARTIN CORPORATION,
FORMER UNISYS FACILITY,
LAKE SUCCESS, NEW YORK
OPERABLE UNITS NO. 1 & 2
EXTRACTION / RECOVERY WELL ELECTRICAL UPGRADES

INSTRUMENTATION
WELL EW-1R
REMOTE CONTROL PANEL
ANALOG I/O SCHEMATIC

EI-665

C:\Users\roger.rigular\Wood PLC\Lockheed Martin Great Neck - 8.0_Drawings\Rev Electrical Upgrade Design\Sheets\EI-665.dwg Wed, 01 Sep 2021 - 1:38pm roger.rigular

UNAUTHORIZED ALTERATION OR ADDITION TO THIS DOCUMENT IS A VIOLATION OF SECTION 7209 OF THE NEW YORK STATE EDUCATION LAW.

NOTE:

1. SEE SHEET EI-001 FOR LEGEND, ABBREVIATIONS, AND GENERAL NOTES.

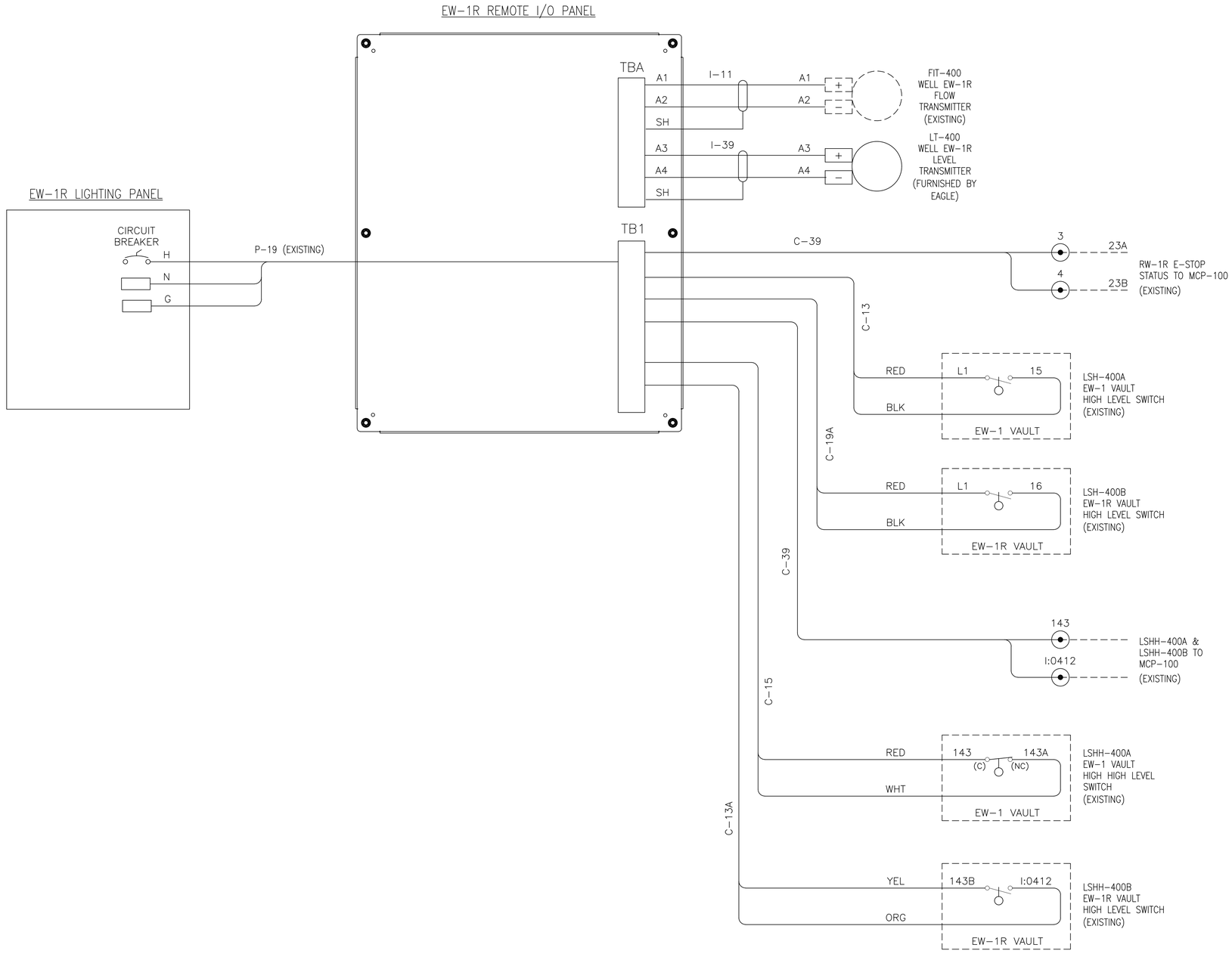

THE SIGNATURE AND SEAL OF THE UNDERSIGNED ON THIS DRAWING CERTIFIES THAT THE DESIGN INFORMATION CONTAINED IN THESE DRAWINGS ACCURATELY REFLECTS THE ORIGINAL DESIGN AND THE MATERIAL DESIGN CHANGES MADE DURING CONSTRUCTION, THAT WERE BROUGHT TO THE UNDERSIGNED'S ATTENTION. THESE DRAWINGS ARE INTENDED TO INCORPORATE ADDENDA, CHANGE ORDERS AND OTHER MATERIAL DESIGN CHANGES, BUT NOT NECESSARILY ALL SITE INSTRUCTIONS. THE UNDERSIGNED DOES NOT WARRANT OR GUARANTEE, NOR ACCEPT ANY RESPONSIBILITY FOR THE ACCURACY OR COMPLETENESS OF THE CONSTRUCTION RECORD INFORMATION SUPPLIED BY OTHERS CONTAINED IN THESE DRAWINGS, BUT DOES CERTIFY THAT THE CONSTRUCTION RECORD INFORMATION, IF ACCURATE AND COMPLETE, PROVIDES A SYSTEM WHICH SUBSTANTIALLY COMPLIES IN ALL MATERIAL RESPECTS WITH THE ORIGINAL DESIGN INTENT."

STATE OF NEW YORK
JITENDRA M. PATEL
LICENSED PROFESSIONAL ENGINEER
078451
9/1/21

jitu.patel Digitally signed by jitu.patel DN: CN=jitu.patel Date: 2021.09.01 17:30:18-04'00'

NO.	DATE	REVISIONS	BY	CHK
	9/03/21	RECORD DRAWINGS	SCP	REM

DRAWN: BRT	PROJECT NO: 3617187443
ENGINEER: REM	SCALE: NOT APPLICABLE
CHECKED: SCP	APPROVED: S. PEARSON
DATE: 4/30/20	DATE:

amec
AMEC E & E PC
214-25 42nd Ave
Bayside, New York 11361

LOCKHEED MARTIN CORPORATION,
FORMER UNISYS FACILITY,
LAKE SUCCESS, NEW YORK
OPERABLE UNITS NO. 1 & 2
EXTRACTION / RECOVERY WELL ELECTRICAL UPGRADES

INSTRUMENTATION
WELL EW-1R
REMOTE CONTROL PANEL
INTERCONNECTION WIRING DIAGRAM

EI-666

C:\Users\roger.riquier\Wood PLC\Lockheed Martin Great Neck - R.0_Drawings\Rev Electrical Upgrade Design\Sheets\EI-666.dwg Wed, 01 Sep 2021 - 1:38pm roger.riquier

UNAUTHORIZED ALTERATION OR ADDITION TO THIS DOCUMENT IS A VIOLATION OF SECTION 7209 OF THE NEW YORK STATE EDUCATION LAW.

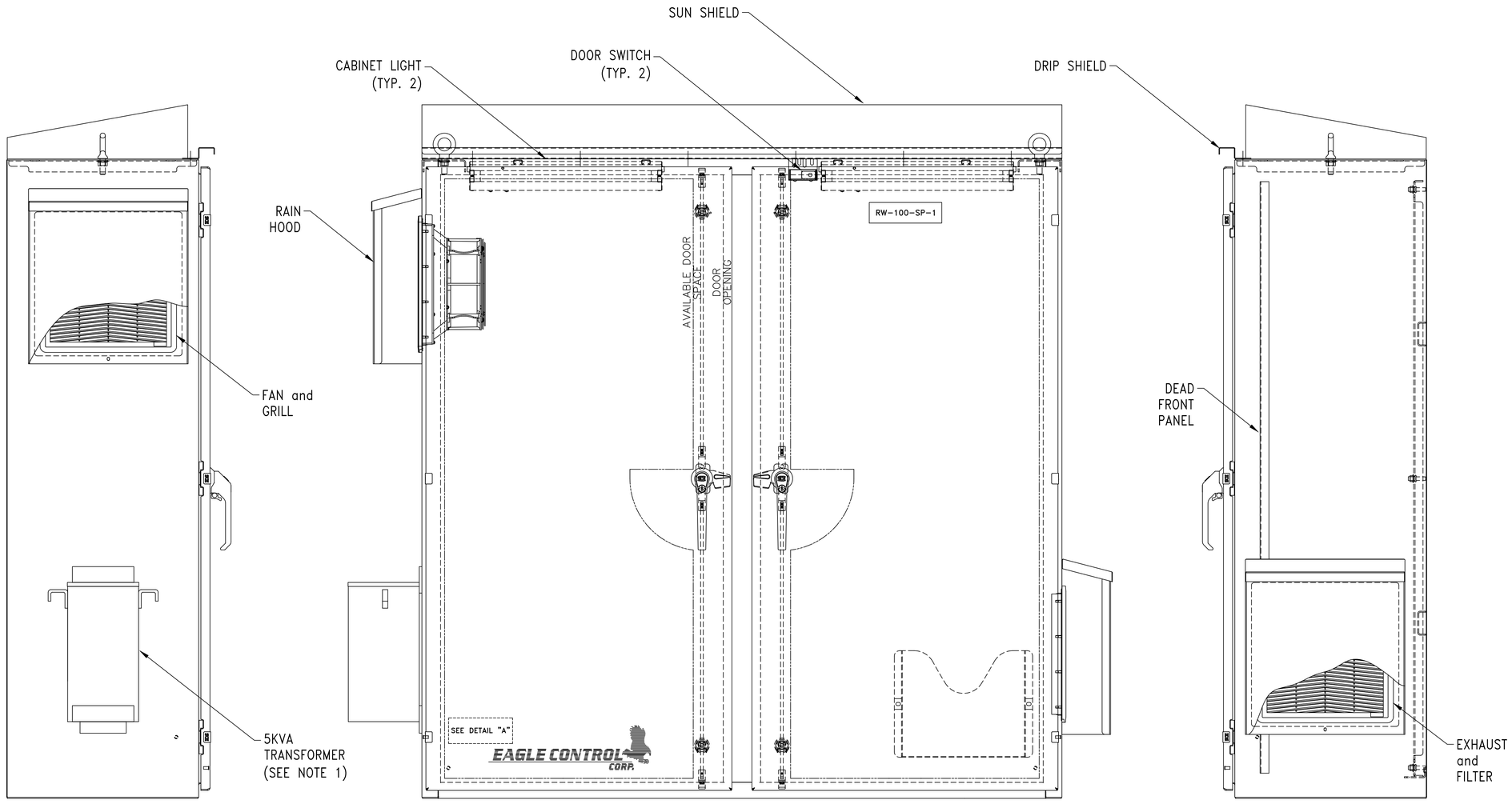

LEFT SIDE VIEW

SCALE 3/16" = 1"

FRONT PANEL ARRANGEMENT

SCALE 3/16" = 1"

RIGHT SIDE VIEW

SCALE 3/16" = 1"

NAMEPLATE DETAIL "A"

EAGLE CONTROL CORPORATION
23 OLD DOCK ROAD
YAPHANK, NY 11980
TEL: (631)924-1315

WELL RW-100
SP-1 VFD PANEL
EAGLE ORDER No. 1026

(NO SCALE)

THE SIGNATURE AND SEAL OF THE UNDERSIGNED ON THIS DRAWING CERTIFIES THAT THE DESIGN INFORMATION CONTAINED IN THESE DRAWINGS ACCURATELY REFLECTS THE ORIGINAL DESIGN AND THE MATERIAL DESIGN CHANGES MADE DURING CONSTRUCTION, THAT WERE BROUGHT TO THE UNDERSIGNED'S ATTENTION. THESE DRAWINGS ARE INTENDED TO INCORPORATE ADDENDA, CHANGE ORDERS AND OTHER MATERIAL DESIGN CHANGES, BUT NOT NECESSARILY ALL SITE INSTRUCTIONS. THE UNDERSIGNED DOES NOT WARRANT OR GUARANTEE, NOR ACCEPT ANY RESPONSIBILITY FOR THE ACCURACY OR COMPLETENESS OF THE CONSTRUCTION RECORD INFORMATION SUPPLIED BY OTHERS CONTAINED IN THESE DRAWINGS, BUT DOES CERTIFY THAT THE CONSTRUCTION RECORD INFORMATION, IF ACCURATE AND COMPLETE, PROVIDES A SYSTEM WHICH SUBSTANTIALLY COMPLIES IN ALL MATERIAL RESPECTS WITH THE ORIGINAL DESIGN INTENT."

STATE OF NEW YORK
JITENDRA M. PATEL
975431
LICENSED PROFESSIONAL ENGINEER
10/15/21

jitu.patel Digitally signed by jitu.patel DN: CN=jitu.patel Date: 2021.10.15 11:04:34-04'00'

NO.	DATE	REVISIONS	BY	CHK
	10/15/21	RECORD DRAWINGS	SCP	REM

DRAWN: NJG	PROJECT NO: 3671797453
ENGINEER: REM	SCALE: NOT APPLICABLE
CHECKED: SCP	APPROVED: S. Pearson
DATE: 10/04/19	DATE:

amec
AMEC E & E PC
214-25 42nd Ave
Bayside, New York 11361

LOCKHEED MARTIN CORPORATION,
FORMER UNISYS FACILITY,
LAKE SUCCESS, NEW YORK
OPERABLE UNITS NO. 1 & 2
EXTRACTION / RECOVERY WELL ELECTRICAL UPGRADES

INSTRUMENTATION

WELL RW-100
SP-1 VFD PANEL
PANEL ARRANGEMENT

EI-670

D:\Users\roger.riquier\Wood PLC\Lockheed Martin Great Neck - R.O. Drawings\Rev. Electrical Upgrade Design\Sheets\EI-670.dwg Thu, 14 Oct 2021 - 7:45am roger.riquier

UNAUTHORIZED ALTERATION OR ADDITION TO THIS DOCUMENT IS A VIOLATION OF SECTION 7209 OF THE NEW YORK STATE EDUCATION LAW.

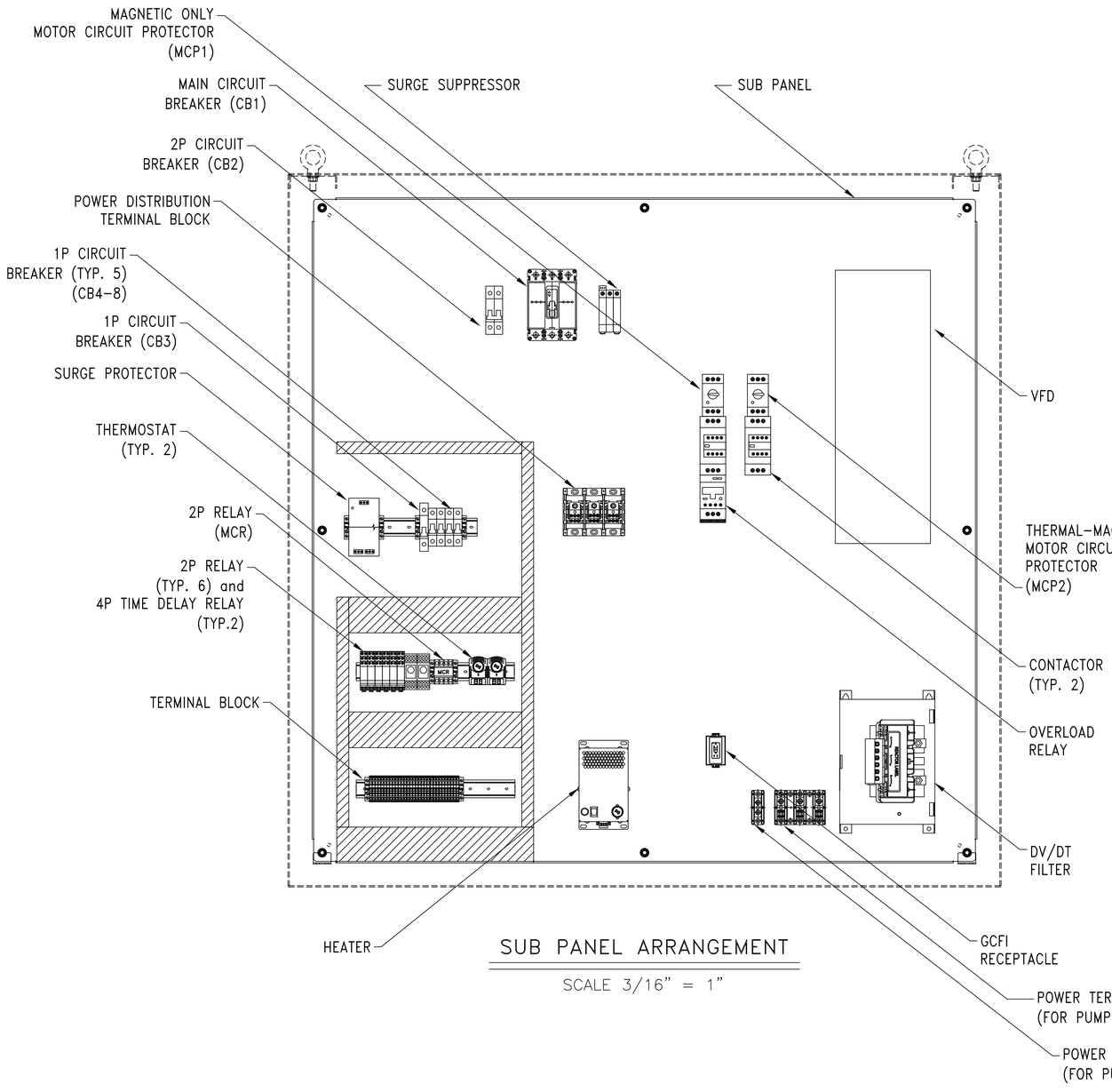

SUB PANEL ARRANGEMENT

SCALE 3/16" = 1"

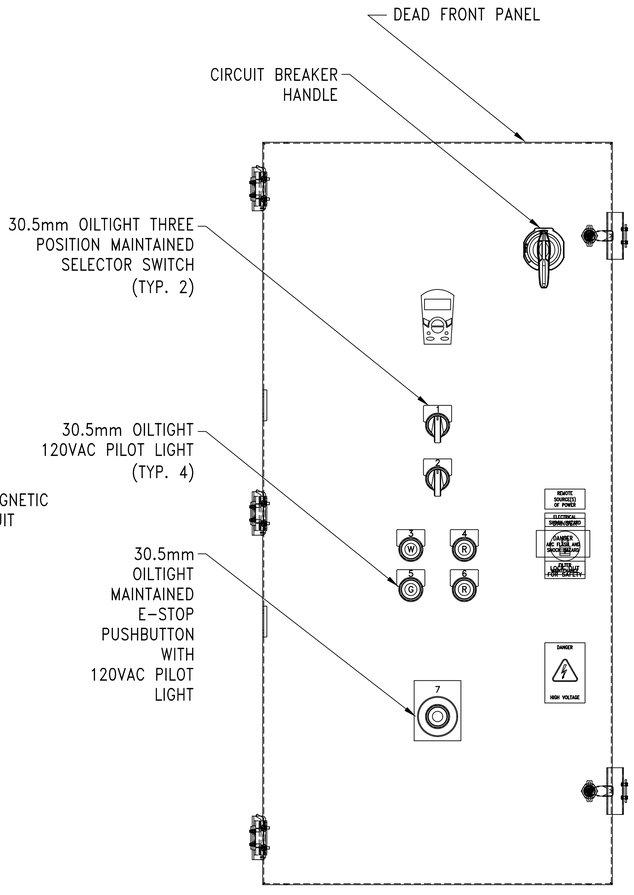

DEAD FRONT PANEL ARRANGEMENT

SCALE 3/16" = 1"

NAMEPLATE SCHEDULE

NP #	QTY	NAMEPLATE INSCRIPTION	SIZE / (LENS)	NP #	QTY	NAMEPLATE INSCRIPTION	SIZE / (LENS)
1	1	VFD MODE VFD-OFF-BYPASS	30.5mm	5	1	DRIVE STOPPED	30.5mm
2	1	DRIVE MODE LOCAL-OFF-REMOTE	30.5mm	6	1	DRIVE RUNNING	30.5mm
3	1	CONTROL POWER	30.5mm	7	1	EMERGENCY STOP	4.5"H x 3.5"W
4	1	DRIVE FAULT	30.5mm	8			

TERMINAL BLOCK LAYOUT

41	42	L1	N1	12	13	14	L2	23	L2	24	30	31	32	33	34	35	36	37	38	39	40	G	G	G	G	G	G	G	G	G	G	G	G

NOTES:

1. "E-STOP" BUTTON ON VFD DEAD FRONT DOOR.
2. N.O. CONTACT TO BYPASS CONTACTOR AND WIRE TO I/O IN RCP.

jitu.patel Digitally signed by jitu.patel DN: cn=jitu.patel, o=amec, ou=, email=jitu.patel@amec.com, c=US Date: 2021.09.01 13:36:54 -04'00'

STATE OF NEW YORK — JITENDRA M. PATEL — 075431 — LICENSED PROFESSIONAL ENGINEER

9/1/21

THE SIGNATURE AND SEAL OF THE UNDERSIGNED ON THIS DRAWING CERTIFIES THAT THE DESIGN INFORMATION CONTAINED IN THESE DRAWINGS ACCURATELY REFLECTS THE ORIGINAL DESIGN AND THE MATERIAL DESIGN CHANGES MADE DURING CONSTRUCTION, THAT WERE BROUGHT TO THE UNDERSIGNED'S ATTENTION. THESE DRAWINGS ARE INTENDED TO INCORPORATE ADDENDA, CHANGE ORDERS AND OTHER MATERIAL DESIGN CHANGES, BUT NOT NECESSARILY ALL SITE INSTRUCTIONS. THE UNDERSIGNED DOES NOT WARRANT OR GUARANTEE, NOR ACCEPT ANY RESPONSIBILITY FOR THE ACCURACY OR COMPLETENESS OF THE CONSTRUCTION RECORD INFORMATION SUPPLIED BY OTHERS CONTAINED IN THESE DRAWINGS, BUT DOES CERTIFY THAT THE CONSTRUCTION RECORD INFORMATION, IF ACCURATE AND COMPLETE, PROVIDES A SYSTEM WHICH SUBSTANTIALLY COMPLIES IN ALL MATERIAL RESPECTS WITH THE ORIGINAL DESIGN INTENT."

NO.	DATE	REVISIONS	BY	CHK
	9/03/21	RECORD DRAWINGS	SCP	REM

DRAWN: NJG	PROJECT NO: 3671797453
ENGINEER: REM	SCALE: NOT APPLICABLE
CHECKED: SCP	APPROVED: S. PEARSON
DATE: 10/04/19	DATE: 4/9/19

amec
AMEC E & E PC
214-25 42nd Ave
Bayside, New York 11361

LOCKHEED MARTIN CORPORATION,
FORMER UNISYS FACILITY,
LAKE SUCCESS, NEW YORK
OPERABLE UNITS NO. 1 & 2
EXTRACTION / RECOVERY WELL ELECTRICAL UPGRADES

INSTRUMENTATION

WELL RW-100 VFD PANEL
PANEL LAYOUT

EI-671

C:\Users\roger.riquier\Wood PLC\Lockheed Martin Great Neck - R.O. Drawings\Rev Electrical Upgrade Design\Sheets\EI-671.dwg Wed, 01 Sep 2021 - 1:38pm roger.riquier

UNAUTHORIZED ALTERATION OR ADDITION TO THIS DOCUMENT IS A VIOLATION OF SECTION 7209 OF THE NEW YORK STATE EDUCATION LAW.

LOCKHEED MARTIN CORPORATION
OPERABLE UNITS 1 & 2 ELECTRICAL UPGRADES

REMOTE I/O PANEL BILL OF MATERIALS

ITEM No.	QTY.	MANUFACTURER	PART NUMBER	DESCRIPTION	U.L. FILE No.	U.L. CCN
1	1	SAGINAW	SCE-60EL6018SS6LPPL	60"H x 60"W x 18"D ENCLOSURE	E69392	NITW
2	1	SAGINAW	SCE-60P60	SUB-PANEL	E69392	NITW
3	1	SAGINAW	SCE-DF60EL60	DEAD FRONT	E69392	NITW
4	1	SAGINAW	XX	SUN SHIELD	E69392	NITW
5	2	SAGINAW	SCE-TEMNO	THERMOSTAT	E358386	NITW2
6	1	SAGINAW	SCE-N12FA1010	FAN	E358386	NITW2
7	1	SAGINAW	SCE-N12FGA1010	EXHAUST GRILL	E358386	NITW2
8	1	SAGINAW	SCE-RH10N12SS	RAIN HOOD	E69392	NITW
9	2	SAGINAW	SCE-LF18NO	LIGHT	E358386	NITW2
10	1	SAGINAW	SCE-HF4001B	120V A.C., 400W HEATER WITH BUILT IN THERMOSTAT	E358386	NITW2
11	1	SAGINAW	SCE-DS60SS6	DRIP SHIELD	E69392	NITW
12	2	SAGINAW	SCE-LSA	DOOR SWITCH	E358386	NITW2
13	2	SAGINAW	SCE-ELMFK4SS6-OS	MOUNTING FEET	E69392	NITW
14	2	LOVATO	SM3R7500	THERMAL MAGNETIC MOTOR CIRCUIT PROTECTORS	E155982	NJOT
15	2	ABB	AF65-30-22-13	CONTACTOR W/AUX CONTACTS - 1N.O./1N.C.	E312527	NJOT
16	1	ALLEN-BRADLEY	20G11ND065JA0NNNNN	50HP, 65AMP POWERFLEX 755 VFD	E59272	NMMS
17	1	CUTLER/HAMMER	FHMVD12B	EXTERNAL OPERATING HANDLE FOR CB	E64983	DHJR
18	1	CUTLER/HAMMER	F3P100	3P, CIRCUIT BREAKER (UL489)	E7819	DHJR
19	1	CUTLER/HAMMER	E34TPB120LWG06	30mm LED PILOT LIGHT - WHITE	E131568	NKCR
20	1	CUTLER/HAMMER	E34TPB120LGG06	30mm LED PILOT LIGHT - GREEN	E131568	NKCR
21	2	CUTLER/HAMMER	E34TPB120LRG06	30mm LED PILOT LIGHT - RED	E131568	NKCR
22	2	CUTLER/HAMMER	E34VHBL1-2X	30mm 3-POSITION SELECTOR SWITCH	E131568	NKCR
23	1	CUTLER/HAMMER	E34TGDB63LED06-1X	30mm EMERGENCY STOP PUSHBUTTON	E131568	NKCR
24	1	EDISON	HPB106-3	POWER DISTRIBUTION TERMINAL BLOCK	E333541	QPQS
25	1	EDISON	PBC-33	COVER FOR HPB106 T.B.	E333541	QPQS
26	1	EDISON	HPB104-3	POWER TERMINAL BLOCK FOR PUMP LOAD CONNECTION	E333541	QPQS
27	1	EDISON	HPB101-1	POWER TERMINAL BLOCK FOR PUMP GROUND CONNECTION	E333541	QPQS
28	4	EDISON	PBC-21	COVER FOR HPB101 and HPB104	E333541	QPQS
29	1	TCI	V1K80A00	DV/DT FILTER	E116124	NIMX
30	1	SOLA	STV25K-10S	SURGE PROTECTOR	E335146	VZCA2
31	1	MERSEN	STP4803PDGM	SURGE SUPPRESSOR, 277/480Y WITH REMOTE CONTACT	E210793	VZCA2
32	1	ACME	T253014SS	5KVA, 480VAC x 120VAC 316L SS TRANSFORMER	E79947	XPTQ
33	1	SCHNEIDER ELECTRIC	M9F42215	2P, 15AMP, UL 489 CIRCUIT BREAKER	E215117	QVNU2
34	1	SCHNEIDER ELECTRIC	M9F21140	1P, 40AMP, UL 489 CIRCUIT BREAKER	E215117	QVNUR
35	1	SCHNEIDER ELECTRIC	M9F21101	1P, 1AMP, UL 1077 CIRCUIT BREAKER	E90509	QVNU2
36	1	SCHNEIDER ELECTRIC	M9F21102	1P, 2AMP, UL 1077 CIRCUIT BREAKER	E90509	QVNU2
37	1	SCHNEIDER ELECTRIC	M9F21104	1P, 4AMP, UL 1077 CIRCUIT BREAKER	E90509	QVNU2
38	1	SCHNEIDER ELECTRIC	M9F21116	1P, 15AMP, UL 1077 CIRCUIT BREAKER	E90509	QVNU2
39	1	SCHNEIDER ELECTRIC	M9F21120	1P, 20AMP, UL 1077 CIRCUIT BREAKER	E90509	QVNU2
40	6	FINDER	46.52.8.120.0054	2P, 120VAC, CONTROL RELAY	E106390	NRNT2
41	6	FINDER	97.02	2P, RELAY SOCKET FOR 46 SERIES	E140923	SWIV
42	1	FINDER	60.12.8.120.0050	2P, 120VAC, CONTROL RELAY 10AMP, OCTAL	E106390	NRNT2
43	1	FINDER	90.02	2P, OCTAL RELAY BASE	E140923	SWIV
44	2	FINDER	85.04.0.125.0000	4P, 120VAC, TIME DELAY RELAY	E106390	NRNT2
45	2	FINDER	94.74	4P, RELAY SOCKET FOR 85 SERIES	E140923	SWIV
46	1	PHOENIX CONTACT	5600639 (EM DUO-120/15/GFI/AUX)	120VAC, 15AMP RECEPTACLE	E238705	NRAQ
47	1	PHOENIX CONTACT	3031364	TERMINAL BLOCK	E60425	XCFR2



jitu.patel Digitally signed by jitu.patel DN: cn=jitu.patel Date: 2021.09.01 17:31:08-04'00'

THE SIGNATURE AND SEAL OF THE UNDERSIGNED ON THIS DRAWING CERTIFIES THAT THE DESIGN INFORMATION CONTAINED IN THESE DRAWINGS ACCURATELY REFLECTS THE ORIGINAL DESIGN AND THE MATERIAL DESIGN CHANGES MADE DURING CONSTRUCTION, THAT WERE BROUGHT TO THE UNDERSIGNED'S ATTENTION. THESE DRAWINGS ARE INTENDED TO INCORPORATE ADDENDA, CHANGE ORDERS AND OTHER MATERIAL DESIGN CHANGES, BUT NOT NECESSARILY ALL SITE INSTRUCTIONS. THE UNDERSIGNED DOES NOT WARRANT OR GUARANTEE, NOR ACCEPT ANY RESPONSIBILITY FOR THE ACCURACY OR COMPLETENESS OF THE CONSTRUCTION RECORD INFORMATION SUPPLIED BY OTHERS CONTAINED IN THESE DRAWINGS, BUT DOES CERTIFY THAT THE CONSTRUCTION RECORD INFORMATION, IF ACCURATE AND COMPLETE, PROVIDES A SYSTEM WHICH SUBSTANTIALLY COMPLIES IN ALL MATERIAL RESPECTS WITH THE ORIGINAL DESIGN INTENT."

NO.	DATE	REVISIONS	BY	CHK
	9/03/21	RECORD DRAWINGS	SCP	REM

DRAWN: NJG	PROJECT NO: 3671797453
ENGINEER: REM	SCALE: NOT APPLICABLE
CHECKED: SCP	APPROVED: S. PEARSON
DATE: 10/04/19	DATE:

amec
AMEC E & E PC
214-25 42nd Ave
Bayside, New York 11361

LOCKHEED MARTIN CORPORATION,
FORMER UNISYS FACILITY,
LAKE SUCCESS, NEW YORK
OPERABLE UNITS NO. 1 & 2
EXTRACTION / RECOVERY WELL ELECTRICAL UPGRADES

INSTRUMENTATION
WELL RW-100
SP-1 VFD PANEL
BILL OF MATERIALS

EI-672

C:\Users\roger.rajuer\Wood. PLC\Lockheed Martin Great Neck - 8.0_Drawings\Rev Electrical Upgrade Design\Sheets\EI-672.dwg Wed, 01 Sep 2021 - 1:38pm roger.rajuer

UNAUTHORIZED ALTERATION OR ADDITION TO THIS DOCUMENT IS A VIOLATION OF SECTION 7209 OF THE NEW YORK STATE EDUCATION LAW.

THIS PANEL = 480VAC 3 PH – TOTAL AMP 61 – TOTAL HP 40 – LARGEST MOTOR 40 HP – SCCR-18KAIC

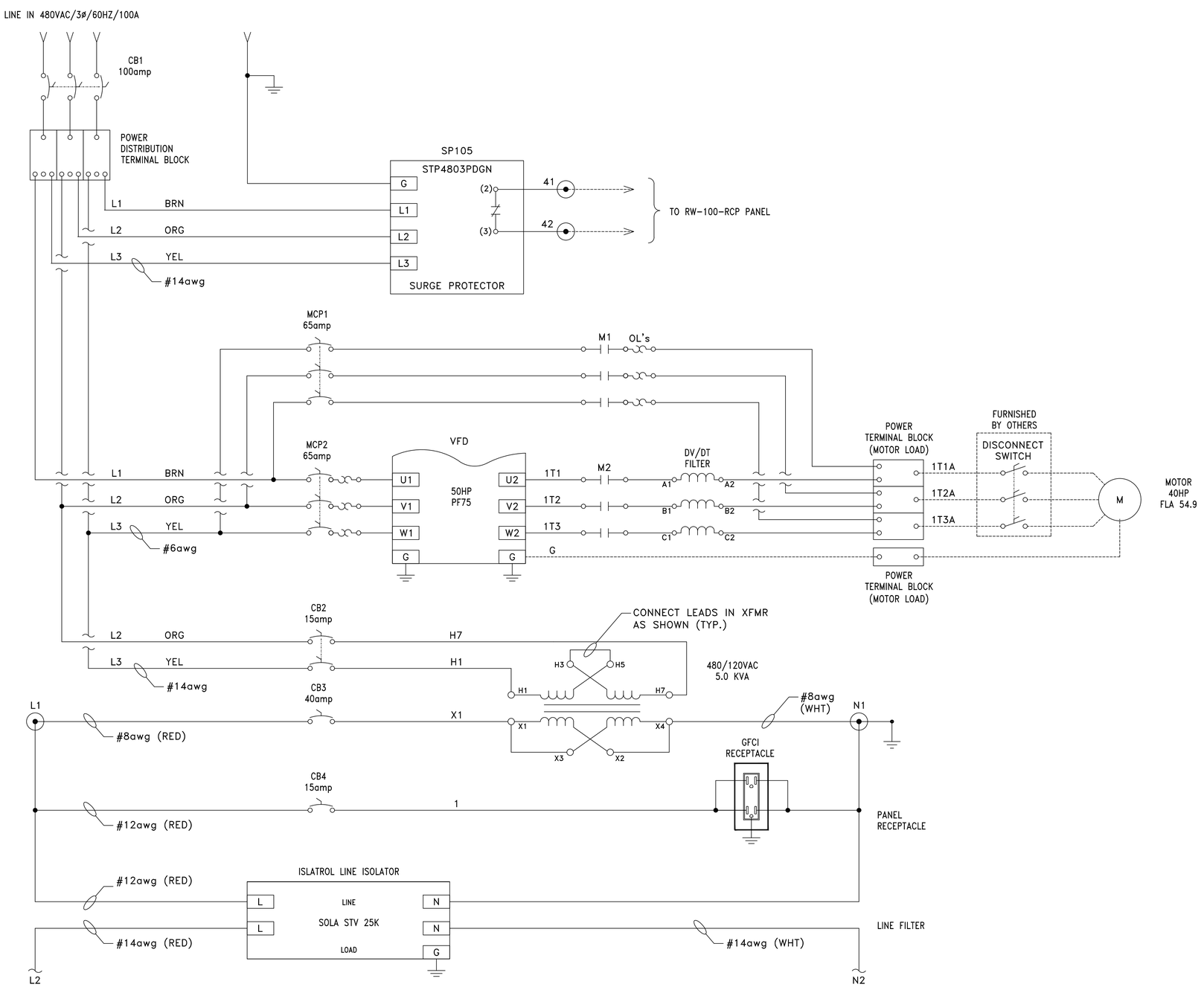

CONTINUED ON EI-674

THE SIGNATURE AND SEAL OF THE UNDERSIGNED ON THIS DRAWING CERTIFIES THAT THE DESIGN INFORMATION CONTAINED IN THESE DRAWINGS ACCURATELY REFLECTS THE ORIGINAL DESIGN AND THE MATERIAL DESIGN CHANGES MADE DURING CONSTRUCTION, THAT WERE BROUGHT TO THE UNDERSIGNED'S ATTENTION. THESE DRAWINGS ARE INTENDED TO INCORPORATE ADDENDA, CHANGE ORDERS AND OTHER MATERIAL DESIGN CHANGES, BUT NOT NECESSARILY ALL SITE INSTRUCTIONS. THE UNDERSIGNED DOES NOT WARRANT OR GUARANTEE, NOR ACCEPT ANY RESPONSIBILITY FOR THE ACCURACY OR COMPLETENESS OF THE CONSTRUCTION RECORD INFORMATION SUPPLIED BY OTHERS CONTAINED IN THESE DRAWINGS, BUT DOES CERTIFY THAT THE CONSTRUCTION RECORD INFORMATION, IF ACCURATE AND COMPLETE, PROVIDES A SYSTEM WHICH SUBSTANTIALLY COMPLIES IN ALL MATERIAL RESPECTS WITH THE ORIGINAL DESIGN INTENT."

NO.	DATE	REVISIONS	BY	CHK
	9/03/21	RECORD DRAWINGS	SCP	REM

DRAWN: NJG | PROJECT NO: 3671797453
ENGINEER: REM | SCALE: NOT APPLICABLE
CHECKED: SCP | APPROVED: S. PEARSON
DATE: 10/04/19 | DATE:

AMEC E & E PC
214-25 42nd Ave
Bayside, New York 11361

LOCKHEED MARTIN CORPORATION,
FORMER UNISYS FACILITY,
LAKE SUCCESS, NEW YORK
OPERABLE UNITS NO. 1 & 2
EXTRACTION / RECOVERY WELL ELECTRICAL UPGRADES

INSTRUMENTATION
WELL RW-100
SP-1 VFD PANEL
POWER DISTRIBUTION SCHEMATIC

EI-673

STATE OF NEW YORK
JITENDRA M. PATEL
075431
LICENSED PROFESSIONAL ENGINEER
9/1/21
jitu.patel
Digitally signed by jitu.patel
DN: CN=jitu.patel
Date: 2021.09.01 17:31:21-04'00'

C:\Users\roger.rigler\Wood PLC\Lockheed Martin Great Neck - 8.0_Drawings\Rev. Electrical Upgrade Design\Sheets\EI-673.dwg Wed, 01 Sep 2021 - 1:38pm roger.rigler

UNAUTHORIZED ALTERATION OR ADDITION TO THIS DOCUMENT IS A VIOLATION OF SECTION 7209 OF THE NEW YORK STATE EDUCATION LAW.

CONTINUED FROM EI-673

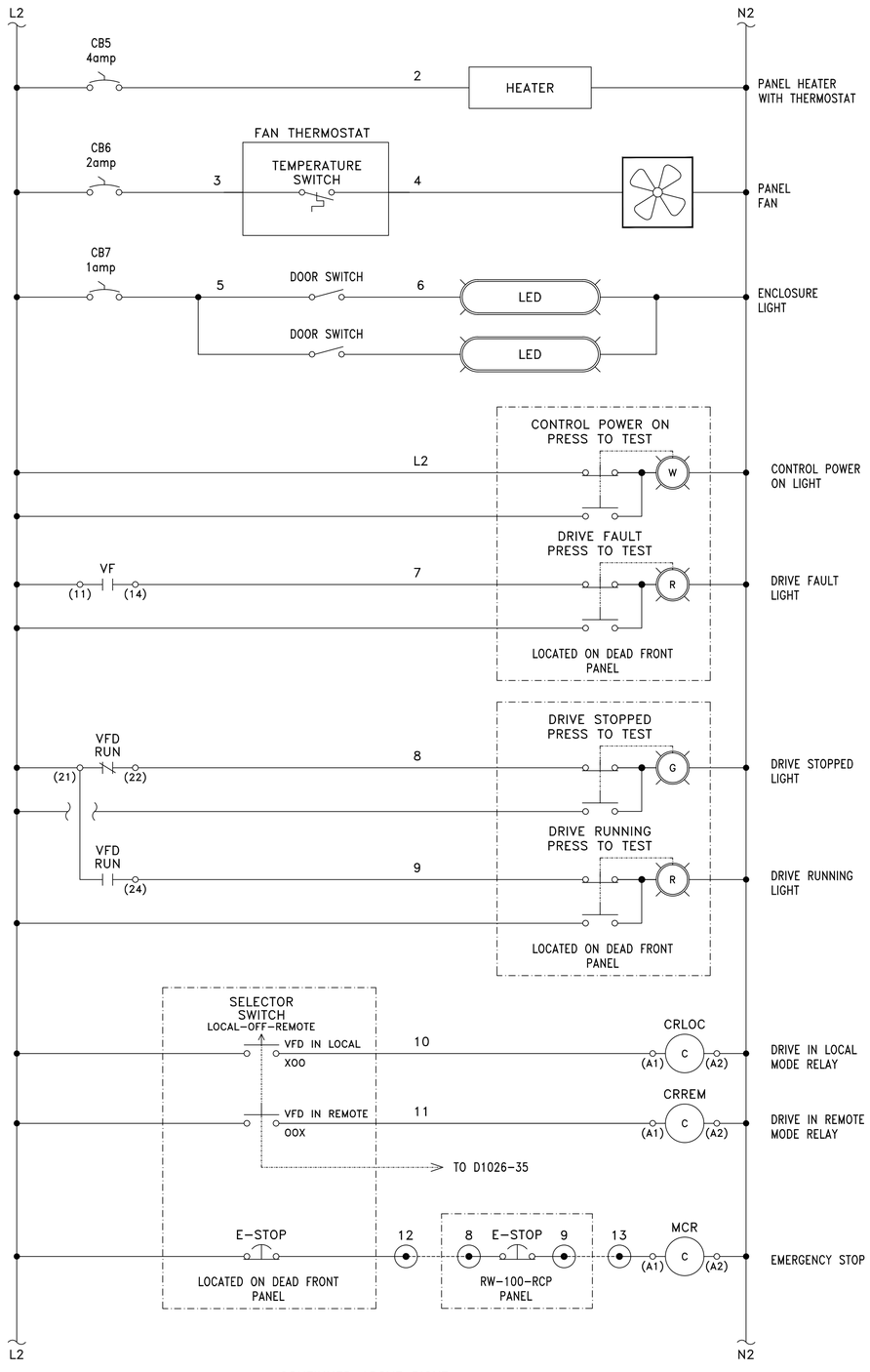

CONTINUED ABOVE RIGHT

CONTINUED FROM BELOW LEFT

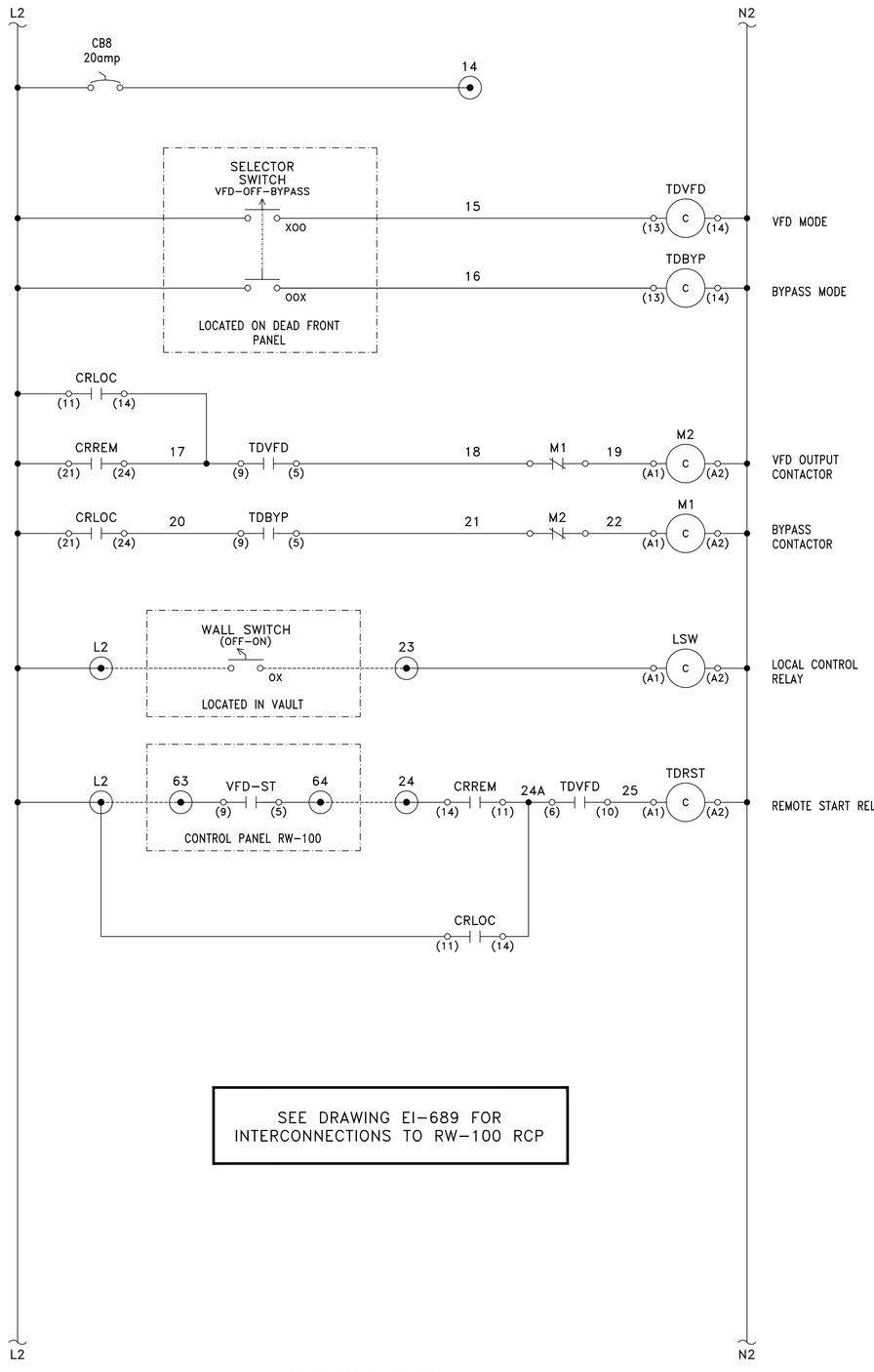

SEE DRAWING EI-689 FOR
INTERCONNECTIONS TO RW-100 RCP

CONTINUED ON EI-675



THE SIGNATURE AND SEAL OF THE UNDERSIGNED ON THIS DRAWING CERTIFIES THAT THE DESIGN INFORMATION CONTAINED IN THESE DRAWINGS ACCURATELY REFLECTS THE ORIGINAL DESIGN AND THE MATERIAL DESIGN CHANGES MADE DURING CONSTRUCTION, THAT WERE BROUGHT TO THE UNDERSIGNED'S ATTENTION. THESE DRAWINGS ARE INTENDED TO INCORPORATE ADDENDA, CHANGE ORDERS AND OTHER MATERIAL DESIGN CHANGES, BUT NOT NECESSARILY ALL SITE INSTRUCTIONS. THE UNDERSIGNED DOES NOT WARRANT OR GUARANTEE, NOR ACCEPT ANY RESPONSIBILITY FOR THE ACCURACY OR COMPLETENESS OF THE CONSTRUCTION RECORD INFORMATION SUPPLIED BY OTHERS CONTAINED IN THESE DRAWINGS, BUT DOES CERTIFY THAT THE CONSTRUCTION RECORD INFORMATION, IF ACCURATE AND COMPLETE, PROVIDES A SYSTEM WHICH SUBSTANTIALLY COMPLIES IN ALL MATERIAL RESPECTS WITH THE ORIGINAL DESIGN INTENT."

NO.	DATE	REVISIONS	BY	CHK
	9/03/21	RECORD DRAWINGS	SCP	REM

DRAWN: NJG	PROJECT NO: 3671797453
ENGINEER: REM	SCALE: NOT APPLICABLE
CHECKED: SCP	APPROVED: S. PEARSON
DATE: 10/04/19	DATE:

amec
AMEC E & E PC
214-25 42nd Ave
Bayside, New York 11361

LOCKHEED MARTIN CORPORATION,
FORMER UNISYS FACILITY,
LAKE SUCCESS, NEW YORK
OPERABLE UNITS NO. 1 & 2
EXTRACTION / RECOVERY WELL ELECTRICAL UPGRADES

INSTRUMENTATION
WELL RW-100
SP-1 VFD PANEL
VFD CONTROLS SCHEMATIC

EI-674

C:\Users\roger.rigole\Wood PLC\Lockheed Martin Great Neck - R.O. Drawings\Rev. Electrical Upgrade Design\Sheets\EI-674.dwg Wed, 01 Sep 2021 - 1:38pm roger.rigole

UNAUTHORIZED ALTERATION OR ADDITION TO THIS DOCUMENT IS A VIOLATION OF SECTION 7209 OF THE NEW YORK STATE EDUCATION LAW.

CONTINUED FROM EI-674

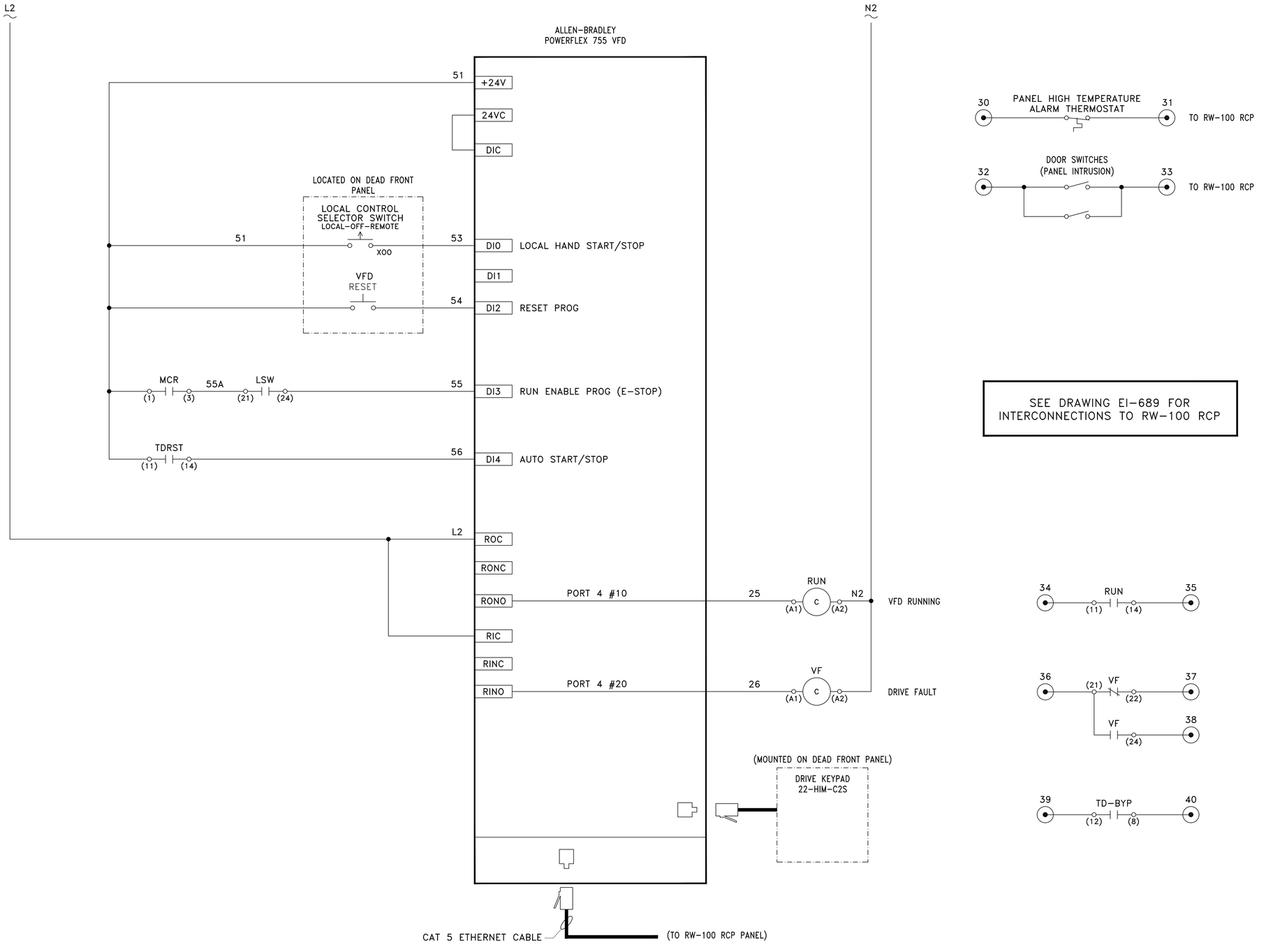

SEE DRAWING EI-689 FOR
INTERCONNECTIONS TO RW-100 RCP



jitu.patel Digitally signed by jitu.patel
DN: CN=jitu.patel
Date: 2021.09.01 17:38:51-04'00'

THE SIGNATURE AND SEAL OF THE UNDERSIGNED ON THIS DRAWING CERTIFIES THAT THE DESIGN INFORMATION CONTAINED IN THESE DRAWINGS ACCURATELY REFLECTS THE ORIGINAL DESIGN AND THE MATERIAL DESIGN CHANGES MADE DURING CONSTRUCTION, THAT WERE BROUGHT TO THE UNDERSIGNED'S ATTENTION. THESE DRAWINGS ARE INTENDED TO INCORPORATE ADDENDA, CHANGE ORDERS AND OTHER MATERIAL DESIGN CHANGES, BUT NOT NECESSARILY ALL SITE INSTRUCTIONS. THE UNDERSIGNED DOES NOT WARRANT OR GUARANTEE, NOR ACCEPT ANY RESPONSIBILITY FOR THE ACCURACY OR COMPLETENESS OF THE CONSTRUCTION RECORD INFORMATION SUPPLIED BY OTHERS CONTAINED IN THESE DRAWINGS, BUT DOES CERTIFY THAT THE CONSTRUCTION RECORD INFORMATION, IF ACCURATE AND COMPLETE, PROVIDES A SYSTEM WHICH SUBSTANTIALLY COMPLIES IN ALL MATERIAL RESPECTS WITH THE ORIGINAL DESIGN INTENT."

NO.	DATE	REVISIONS	BY	CHK
	9/03/21	RECORD DRAWINGS	SCP	REM

DRAWN: NJG	PROJECT NO: 3671797453
ENGINEER: REM	SCALE: NOT APPLICABLE
CHECKED: SCP	APPROVED: S. PEARSON
DATE: 10/04/19	DATE:

amec
AMEC E & E PC
214-25 42nd Ave
Bayside, New York 11361

LOCKHEED MARTIN CORPORATION,
FORMER UNISYS FACILITY,
LAKE SUCCESS, NEW YORK
OPERABLE UNITS NO. 1 & 2
EXTRACTION / RECOVERY WELL ELECTRICAL UPGRADES

INSTRUMENTATION
WELL RW-100
SP-1 VFD PANEL
VFD CONTROLS SCHEMATIC

EI-675

C:\Users\roger.rigler\Wood PLC\Lockheed Martin Great Neck - 8.0_Drawings\Rev. Electrical Upgrade Design\Sheets\EI-675.dwg Wed, 01 Sep 2021 - 1:38pm roger.rigler

UNAUTHORIZED ALTERATION OR ADDITION TO THIS DOCUMENT IS A VIOLATION OF SECTION 7209 OF THE NEW YORK STATE EDUCATION LAW.

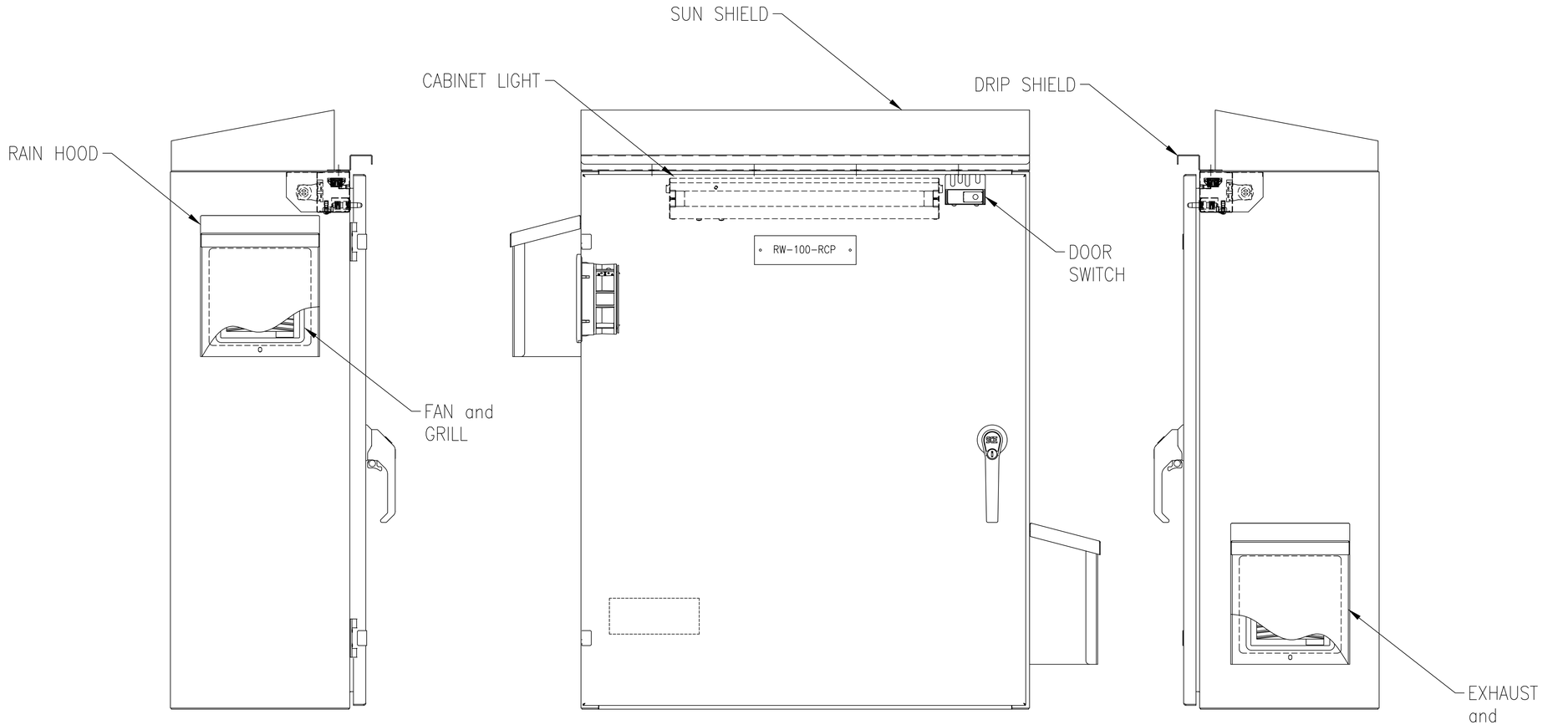

LEFT SIDE VIEW

SCALE 1/4" = 1"

FRONT PANEL ARRANGEMENT

SCALE 1/4" = 1"

RIGHT SIDE VIEW

SCALE 1/4" = 1"

NAMEPLATE DETAIL "A"

EAGLE CONTROL CORPORATION
23 OLD DOCK ROAD
YAPHANK, NY 11980
TEL: (631)924-1315

WELL RW-100
REMOTE CONTROL PANEL
EAGLE ORDER No. 1026

(NO SCALE)

JITENDRA M. PATEL
STATE OF NEW YORK
075431
LICENSED PROFESSIONAL ENGINEER
9/1/21

jitu.patel Digitally signed by jitu.patel DN: CN=jitu.patel Date: 2021.09.01 17:32:06-04'00'

THE SIGNATURE AND SEAL OF THE UNDERSIGNED ON THIS DRAWING CERTIFIES THAT THE DESIGN INFORMATION CONTAINED IN THESE DRAWINGS ACCURATELY REFLECTS THE ORIGINAL DESIGN AND THE MATERIAL DESIGN CHANGES MADE DURING CONSTRUCTION, THAT WERE BROUGHT TO THE UNDERSIGNED'S ATTENTION. THESE DRAWINGS ARE INTENDED TO INCORPORATE ADDENDA, CHANGE ORDERS AND OTHER MATERIAL DESIGN CHANGES, BUT NOT NECESSARILY ALL SITE INSTRUCTIONS. THE UNDERSIGNED DOES NOT WARRANT OR GUARANTEE, NOR ACCEPT ANY RESPONSIBILITY FOR THE ACCURACY OR COMPLETENESS OF THE CONSTRUCTION RECORD INFORMATION SUPPLIED BY OTHERS CONTAINED IN THESE DRAWINGS, BUT DOES CERTIFY THAT THE CONSTRUCTION RECORD INFORMATION, IF ACCURATE AND COMPLETE, PROVIDES A SYSTEM WHICH SUBSTANTIALLY COMPLIES IN ALL MATERIAL RESPECTS WITH THE ORIGINAL DESIGN INTENT."

NO.	DATE	REVISIONS	BY	CHK
	9/03/21	RECORD DRAWINGS	SCP	REM

DRAWN: NJG	PROJECT NO: 3671797453
ENGINEER: REM	SCALE: NOT APPLICABLE
CHECKED: SCP	APPROVED: S. PEARSON
DATE: 10/04/19	DATE: 10/04/19

amec
AMEC E & E PC
214-25 42nd Ave
Bayside, New York 11361

LOCKHEED MARTIN CORPORATION,
FORMER UNISYS FACILITY,
LAKE SUCCESS, NEW YORK
OPERABLE UNITS NO. 1 & 2
EXTRACTION / RECOVERY WELL ELECTRICAL UPGRADES

INSTRUMENTATION

WELL RW-100
REMOTE CONTROL PANEL
PANEL LAYOUT

EI-680

C:\Users\roger.riquier\Wood PLC\Lockheed Martin Great Neck - 8.0_Drawings\Rev Electrical Upgrade Design\Sheets\EI-680.dwg Wed, 01 Sep 2021 - 1:39pm roger.riquier

UNAUTHORIZED ALTERATION OR ADDITION TO THIS DOCUMENT IS A VIOLATION OF SECTION 7209 OF THE NEW YORK STATE EDUCATION LAW.

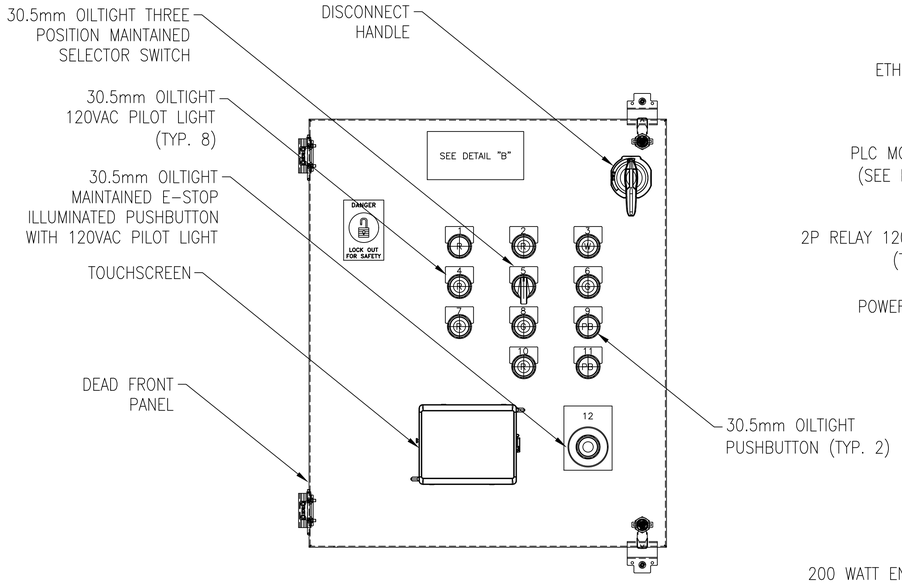

DEAD FRONT PANEL ARRANGEMENT

SCALE 3/16" = 1"

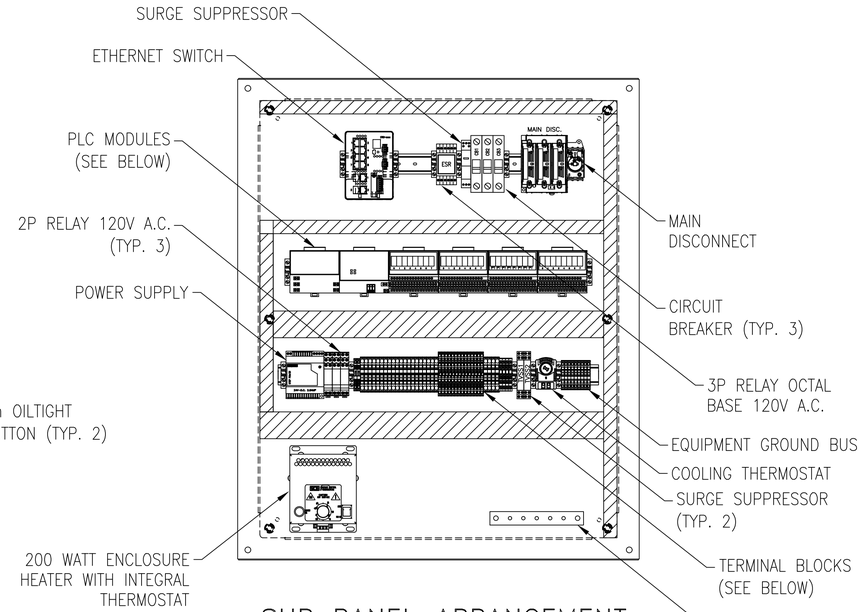

SUB PANEL ARRANGEMENT

SCALE 3/16" = 1"

NAMEPLATE SCHEDULE

NP #	QTY	NAMEPLATE INSCRIPTION	SIZE / (LENS)	NP #	QTY	NAMEPLATE INSCRIPTION	SIZE / (LENS)
1	1	VAULT HIGH LEVEL	30.5mm	7	1	LOW FLOW	30.5mm
2	1	VAULT HIGH HIGH LEVEL	30.5mm	8	1	TREATMENT SYSTEM NORMAL OPERATION	30.5mm
3	1	120VAC POWER	30.5mm	9	1	ALARM RESET	30.5mm
4	1	PUMP VFD FAILURE	30.5mm	10	1	TREATMENT SYSTEM NOT READY	30.5mm
5	1	HAND – OFF – AUTO	30.5mm	11	1	I/O RESET	30.5mm
6	1	PUMP VFD RUNNING	30.5mm	12	1	PUSH TO STOP – PULL TO START	2.5"H x 2.5"W

PLC MODULE DETAIL

POS. #	MODULE
1	POWER SUPPLY
2	ETHERNET COMMUNICATION ADAPTER
3	16 DIGITAL INPUTS
4	8 ISOLATED N.O. RELAY CONTACTS
5	4 ANALOG INPUTS, 24VDC
6	4 ANALOG OUTPUTS, 24VDC

TERMINAL BLOCK LAYOUT

| | | |

UNAUTHORIZED ALTERATION OR ADDITION TO THIS DOCUMENT IS A VIOLATION OF SECTION 7209 OF THE NEW YORK STATE EDUCATION LAW.

LOCKHEED MARTIN CORPORATION
OPERABLE UNITS 1 & 2 ELECTRICAL UPGRADES

REMOTE I/O PANEL BILL OF MATERIALS

ITEM No.	QTY.	MANUFACTURER	PART NUMBER	DESCRIPTION	U.L. FILE No.	U.L. CCN
1	1	SAGINAW	SCE-36EL3012SS6LPPL	36"H x 30"W x 12"D ENCLOSURE	E69392	NITW
2	1	SAGINAW	SCE-36P30	SUB-PANEL	E69392	NITW
3	1	SAGINAW	SCE-ELMFK4SS6-OS	MOUNTING FEET	E69392	NITW
4	1	SAGINAW	SCE-DF36EL30LP	DEAD FRONT	E69392	NITW
5	1	SAGINAW	SCE-XXXXX	SUN SHIELD	E69392	NITW
6	1	SAGINAW	SCE-TEMNO	THERMOSTAT	E358386	NITW2
7	1	SAGINAW	SCE-N12FA44	FAN	E358386	NITW2
8	1	SAGINAW	SCE-N12FGA44	EXHAUST GRILL	E358386	NITW2
9	2	SAGINAW	SCE-RH4N12SS	RAIN HOOD	E69392	NITW
10	1	SAGINAW	SCE-LF18NO	LIGHT	E358386	NITW2
11	1	SAGINAW	SCE-DS30SS6	DRIP SHIELD	E69392	NITW
12	1	SAGINAW	SCE-HF2001A	120VAC, 200W, HEATER WITH BUILT IN THERMOSTAT	E358386	NITW2
13	1	SAGINAW	SCE-LSA	DOOR SWITCH	E358386	NITW2
14	1	ALLEN BRADLEY	194R-N30-1753	30A, NON FUSED DISCONNECT	E14841	NLRV
15	1	ALLEN BRADLEY	194R-S1	12" SHAFT	E14841	NLRV
16	1	ALLEN BRADLEY	194R-PY	RED/YELLOW HANDLE	E14841	NLRV
17	1	SCHNEIDER ELECTRIC	M9F21101	1A CIRCUIT BREAKER	E90509	QVNU2
18	1	SCHNEIDER ELECTRIC	M9F21105	5A CIRCUIT BREAKER	E90509	QVNU2
19	1	SCHNEIDER ELECTRIC	M9F21110	10A CIRCUIT BREAKER	E90509	QVNU2
20	1	EATON/CUTLER-HAMMER	E34TPB120LWG06	30mm LED PILOT LIGHT - WHITE	E1230	NKCR
21	2	EATON/CUTLER-HAMMER	E34TPB120LGG06	30mm LED PILOT LIGHT - GREEN	E1230	NKCR
22	5	EATON/CUTLER-HAMMER	E34TPB120LRG06	30mm LED PILOT LIGHT - RED	E1230	NKCR
23	1	EATON/CUTLER-HAMMER	E34VHBL1-2X	30mm 3-POSITION SWITCH	E1230	NKCR
24	2	EATON/CUTLER-HAMMER	E34PB1-53X	30mm PUSHBUTTON	E1230	NKCR
25	1	EATON/CUTLER-HAMMER	E34GDB63LED06-1X	30mm EMERGENCY STOP PUSHBUTTON	E1230	NKCR
26	2	FINDER	46.52.8.120.0054	2-POLE RELAY, 120VAC COIL, (2) FORM C	E106390	NRNT2
27	3	FINDER	97.02	2-POLE RELAY SOCKET FOR 46 SERIES	E140923	SWIV
28	1	FINDER	60.13.8.120.0050	3-POLE RELAY, 120VAC COIL, (2) FORM C	E106390	NRNT2
29	1	FINDER	90.03	3-POLE RELAY SOCKET FOR 60 SERIES	E140923	SWIV
30	1	FINDER	46.52.9.24.0074	2-POLE RELAY, 24VDC COIL, (2) FORM C	E106390	NRNT2
31	1	PHOENIX CONTACT	2868651 STEP-PS/1AC/24DC/2.5	2.4 AMP POWER SUPPLY	E214596	QQGQ
32	1	ALLEN-BRADLEY	1794-PS13	POWER SUPPLY	E65584	NRAQ2
33	1	ALLEN-BRADLEY	1794-AENTR	ETHERNET COMMUNICATION ADAPTER	E65584	NRAQ2
34	1	ALLEN-BRADLEY	1794-IA16	120VAC INPUT MODULE, 16 PT	E65584	NRAQ2

STATE OF NEW YORK
JITUKUMAR M. PATEL
LICENSED PROFESSIONAL ENGINEER
075451
9/1/21

jitu.patel Digitally signed by jitu.patel DN: CN=jitu.patel Date: 2021.09.01 17:32:34-04'00'

THE SIGNATURE AND SEAL OF THE UNDERSIGNED ON THIS DRAWING CERTIFIES THAT THE DESIGN INFORMATION CONTAINED IN THESE DRAWINGS ACCURATELY REFLECTS THE ORIGINAL DESIGN AND THE MATERIAL DESIGN CHANGES MADE DURING CONSTRUCTION, THAT WERE BROUGHT TO THE UNDERSIGNED'S ATTENTION. THESE DRAWINGS ARE INTENDED TO INCORPORATE ADDENDA, CHANGE ORDERS AND OTHER MATERIAL DESIGN CHANGES, BUT NOT NECESSARILY ALL SITE INSTRUCTIONS. THE UNDERSIGNED DOES NOT WARRANT OR GUARANTEE, NOR ACCEPT ANY RESPONSIBILITY FOR THE ACCURACY OR COMPLETENESS OF THE CONSTRUCTION RECORD INFORMATION SUPPLIED BY OTHERS CONTAINED IN THESE DRAWINGS, BUT DOES CERTIFY THAT THE CONSTRUCTION RECORD INFORMATION, IF ACCURATE AND COMPLETE, PROVIDES A SYSTEM WHICH SUBSTANTIALLY COMPLIES IN ALL MATERIAL RESPECTS WITH THE ORIGINAL DESIGN INTENT."

NO.	DATE	REVISIONS	BY	CHK
	9/03/21	RECORD DRAWINGS	SCP	REM

DRAWN: NJG | PROJECT NO: 3671797453
ENGINEER: REM | SCALE: NOT APPLICABLE
CHECKED: SCP | APPROVED: S. PEARSON
DATE: 10/04/19 | DATE:

amec
AMEC E & E PC
214-25 42nd Ave
Bayside, New York 11361

LOCKHEED MARTIN CORPORATION,
FORMER UNISYS FACILITY,
LAKE SUCCESS, NEW YORK
OPERABLE UNITS NO. 1 & 2
EXTRACTION / RECOVERY WELL ELECTRICAL UPGRADES

INSTRUMENTATION

WELL RW-100
REMOTE CONTROL PANEL
BILL OF MATERIALS

EI-682

D:\Users\roger.riguler\Wood PLC\Lockheed Martin Great Neck - R.O. Drawings\Rev. Electrical Upgrade Design\Sheets\EI-682.dwg Wed, 01 Sep 2021 - 1:39pm roger.riguler

UNAUTHORIZED ALTERATION OR ADDITION TO THIS DOCUMENT IS A VIOLATION OF SECTION 7209 OF THE NEW YORK STATE EDUCATION LAW.

LOCKHEED MARTIN CORPORATION
OPERABLE UNITS 1 & 2 ELECTRICAL UPGRADES

REMOTE I/O PANEL BILL OF MATERIALS

ITEM No.	QTY.	MANUFACTURER	PART NUMBER	DESCRIPTION	U.L. FILE No.	U.L. CCN
35	1	ALLEN-BRADLEY	1794-OW8	RELAY OUTPUT MODULE, 8 PT	E65584	NRAQ2
36	1	ALLEN-BRADLEY	1794-IF4I	ANALOG INPUT MODULE, 4 PT	E65584	NRAQ2
37	1	ALLEN-BRADLEY	1794-OF4I	ANALOG OUTPUT MODULE, 4 PT	E65584	NRAQ2
38	4	ALLEN-BRADLEY	1794-TB3	TERMINAL BASE	E65584	NRAQ2
39	1	ALLEN-BRADLEY	2713P-T6CD1	PANELVIEW 5310 HMI, 6 INCH	61010-1	NRAQ2
40	X	MERSEN	GDL2	UL GLASS FUSE, 2A	E33925	JDYX
41	X	MERSEN	GDL4	UL GLASS FUSE, 4A	E33925	JDYX
42	2	PHOENIX CONTACT	2801512 (PT-IQ-1X2-EX-24DC-UT)	SURGE SUPPRESSOR FOR 4-20mA LOOPS	E138168	QVGQ
43	2	PHOENIX CONTACT	2891081 (FL-SFP-FX)	FIBER TRANSCEIVER CARTRIDGE, 100 Mbit, MULTIMODE, LC CONNECTOR	-	-
44	1	PHOENIX CONTACT	2701554 (FL SWITCH 7006-2GC-EIP	8 PORT MANAGED ETHERNET SWITCH WITH 2 FIBER OPTIC PORTS	E140324	NKCR
45	1	PHOENIX CONTACT	2907918 (PLT-SEC-T3-120-FM-UT)	SURGE SUPPRESSOR	E330181	VZCA
46	2	PHOENIX CONTACT	3036385	FUSED TERMINAL BLOCKS	E60425	XCFR2
47	26	PHOENIX CONTACT	3031364	TERMINAL BLOCKS	E60425	XCFR2
48	12	PHOENIX CONTACT	2717139	ANALOG TERMINAL BLOCK W/GROUND	E60425	XCFR2
49	13	PHOENIX CONTACT	3031429	DOUBLE-LEVEL TERMINAL BLOCK	E60425	XCFR2



jitu.patel Digitally signed by jitu.patel DN: CN=jitu.patel Date: 2021.09.01 17:32:48-04'00'

THE SIGNATURE AND SEAL OF THE UNDERSIGNED ON THIS DRAWING CERTIFIES THAT THE DESIGN INFORMATION CONTAINED IN THESE DRAWINGS ACCURATELY REFLECTS THE ORIGINAL DESIGN AND THE MATERIAL DESIGN CHANGES MADE DURING CONSTRUCTION, THAT WERE BROUGHT TO THE UNDERSIGNED'S ATTENTION. THESE DRAWINGS ARE INTENDED TO INCORPORATE ADDENDA, CHANGE ORDERS AND OTHER MATERIAL DESIGN CHANGES, BUT NOT NECESSARILY ALL SITE INSTRUCTIONS. THE UNDERSIGNED DOES NOT WARRANT OR GUARANTEE, NOR ACCEPT ANY RESPONSIBILITY FOR THE ACCURACY OR COMPLETENESS OF THE CONSTRUCTION RECORD INFORMATION SUPPLIED BY OTHERS CONTAINED IN THESE DRAWINGS, BUT DOES CERTIFY THAT THE CONSTRUCTION RECORD INFORMATION, IF ACCURATE AND COMPLETE, PROVIDES A SYSTEM WHICH SUBSTANTIALLY COMPLIES IN ALL MATERIAL RESPECTS WITH THE ORIGINAL DESIGN INTENT."

NO.	DATE	REVISIONS	BY	CHK
	9/03/21	RECORD DRAWINGS	SCP	REM

DRAWN: NJG	PROJECT NO: 3671797453
ENGINEER: REM	SCALE: NOT APPLICABLE
CHECKED: SCP	APPROVED: S. PEARSON
DATE: 10/04/19	DATE:

amec
AMEC E & E PC
214-25 42nd Ave
Bayside, New York 11361

LOCKHEED MARTIN CORPORATION,
FORMER UNISYS FACILITY,
LAKE SUCCESS, NEW YORK
OPERABLE UNITS NO. 1 & 2
EXTRACTION / RECOVERY WELL ELECTRICAL UPGRADES

INSTRUMENTATION

WELL RW-100
REMOTE CONTROL PANEL
BILL OF MATERIALS

EI-683

G:\Users\roger.rigler\Wood PLC\Lockheed Martin Great Neck - B.O.Drawings\Rev Electrical Upgrade Design\Sheets\EI-683.dwg Wed, 01 Sep 2021 - 1:39pm roger.rigler

UNAUTHORIZED ALTERATION OR ADDITION TO THIS DOCUMENT IS A VIOLATION OF SECTION 7209 OF THE NEW YORK STATE EDUCATION LAW.

C:\Users\roger.rauler\Wood PLC\Lockheed Martin Great Neck - 8.0_Drawings\Rev Electrical Upgrade Design\Sheets\EI-684.dwg Wed, 01 Sep 2021 - 1:39pm roger.rauler

FROM RW-100 BREAKER PANEL CKT. 7 20A
LINE IN 120VAC/1ø/60HZ/20A

H
#12awg BLACK
DISCONNECT NON FUSED SWITCH (30amps)
N
G
#12awg WHITE
5
6
POWER LINE FILTER – SURGE ARRESTOR
1
2
3
4
L1
E-STOP
1
REMOVE JUMPER FOR ADDITIONAL E-STOPS AS REQUIRED
2
#16awg RED (TYP.)
ESR
C
(2)
(10)
EMERGENCY STOP RELAY
(7)
5
ESR
(6)
6
SPARE
#14awg YELLOW (TYP.)
7
R
E-STOP ACTIVATED
8
9
TO RW-100 VFD PANEL
#14awg YELLOW
CB1
(1amp)
10
DOOR SWITCH
LED
ENCLOSURE LIGHT (.21FLA)
N1
ENCLOSURE LIGHT
ILL-PUSHBUTTON PRESS TO TEST
W
120VAC POWER ON
L1
N1

CONTINUED ABOVE RIGHT

CONTINUED FROM BELOW LEFT

L1
N1
CB2
(5amp)
11
HEATER W/THERMOSTAT
L1
N
200W
G
200W ENCLOSURE HEATER WITH THERMOSTAT
FAN THERMOSTAT
12
ENCLOSURE FAN
FAN128 (.14FLA)
2amp
13
CRHHL
(21)
(22)
14
ILL-PUSHBUTTON PRESS TO TEST
R
RW-100 VAULT HIGH HIGH LEVEL
THIS RELAY REQUIRES 24VDC COIL
SCSD
PR2
C
(A1)
(A2)
TO 0U2 MCP-100 24VDC CIRCUIT
NP554
SECONDARY SYSTEM SHUT DOWN
(11)
15
SCSD
(14)
16
#14awg YELLOW (TYP.)
SCSD CONTACTS FOR FIELD USE
(21)
17
SCSD
(24)
18
#14awg YELLOW (TYP.)
4amp
19
LSHH-111 HIGH HIGH LEVEL SWITCH
(EXISTING)
20
CRHHL
C
(A1)
(A2)
LSHH-111 HIGH HIGH LEVEL SWITCH (RW-100 VAULT)
21
(11)
FR1A
CRHHL
22
(14)
FR1B
TO 0U2 MCP-100
#14awg YELLOW (TYP.)
L1
N1

CONTINUED ON EI-685

STATE OF NEW YORK
JITENDRA M. PATEL
075451
LICENSED PROFESSIONAL ENGINEER
9/1/21

Digitally signed by jitu.patel
DN: CN=jitu.patel
Date: 2021.09.01 17:33:01-04'00'

THE SIGNATURE AND SEAL OF THE UNDERSIGNED ON THIS DRAWING CERTIFIES THAT THE DESIGN INFORMATION CONTAINED IN THESE DRAWINGS ACCURATELY REFLECTS THE ORIGINAL DESIGN AND THE MATERIAL DESIGN CHANGES MADE DURING CONSTRUCTION, THAT WERE BROUGHT TO THE UNDERSIGNED'S ATTENTION. THESE DRAWINGS ARE INTENDED TO INCORPORATE ADDENDA, CHANGE ORDERS AND OTHER MATERIAL DESIGN CHANGES, BUT NOT NECESSARILY ALL SITE INSTRUCTIONS. THE UNDERSIGNED DOES NOT WARRANT OR GUARANTEE, NOR ACCEPT ANY RESPONSIBILITY FOR THE ACCURACY OR COMPLETENESS OF THE CONSTRUCTION RECORD INFORMATION SUPPLIED BY OTHERS CONTAINED IN THESE DRAWINGS, BUT DOES CERTIFY THAT THE CONSTRUCTION RECORD INFORMATION, IF ACCURATE AND COMPLETE, PROVIDES A SYSTEM WHICH SUBSTANTIALLY COMPLIES IN ALL MATERIAL RESPECTS WITH THE ORIGINAL DESIGN INTENT."

NO.	DATE	REVISIONS	BY	CHK
	9/03/21	RECORD DRAWINGS	SCP	REM

DRAWN: NJG	PROJECT NO: 3671797453
ENGINEER: REM	SCALE: NOT APPLICABLE
CHECKED: SCP	APPROVED: S. PEARSON
DATE: 10/04/19	DATE:

amec
AMEC E & E PC
214-25 42nd Ave
Bayside, New York 11361

LOCKHEED MARTIN CORPORATION,
FORMER UNISYS FACILITY,
LAKE SUCCESS, NEW YORK
OPERABLE UNITS NO. 1 & 2
EXTRACTION / RECOVERY WELL ELECTRICAL UPGRADES

INSTRUMENTATION

WELL RW-100
REMOTE CONTROL PANEL
POWER DISTRIBUTION SCHEMATIC

EI-684

UNAUTHORIZED ALTERATION OR ADDITION TO THIS DOCUMENT IS A VIOLATION OF SECTION 7209 OF THE NEW YORK STATE EDUCATION LAW.

CONTINUED FROM EI-684

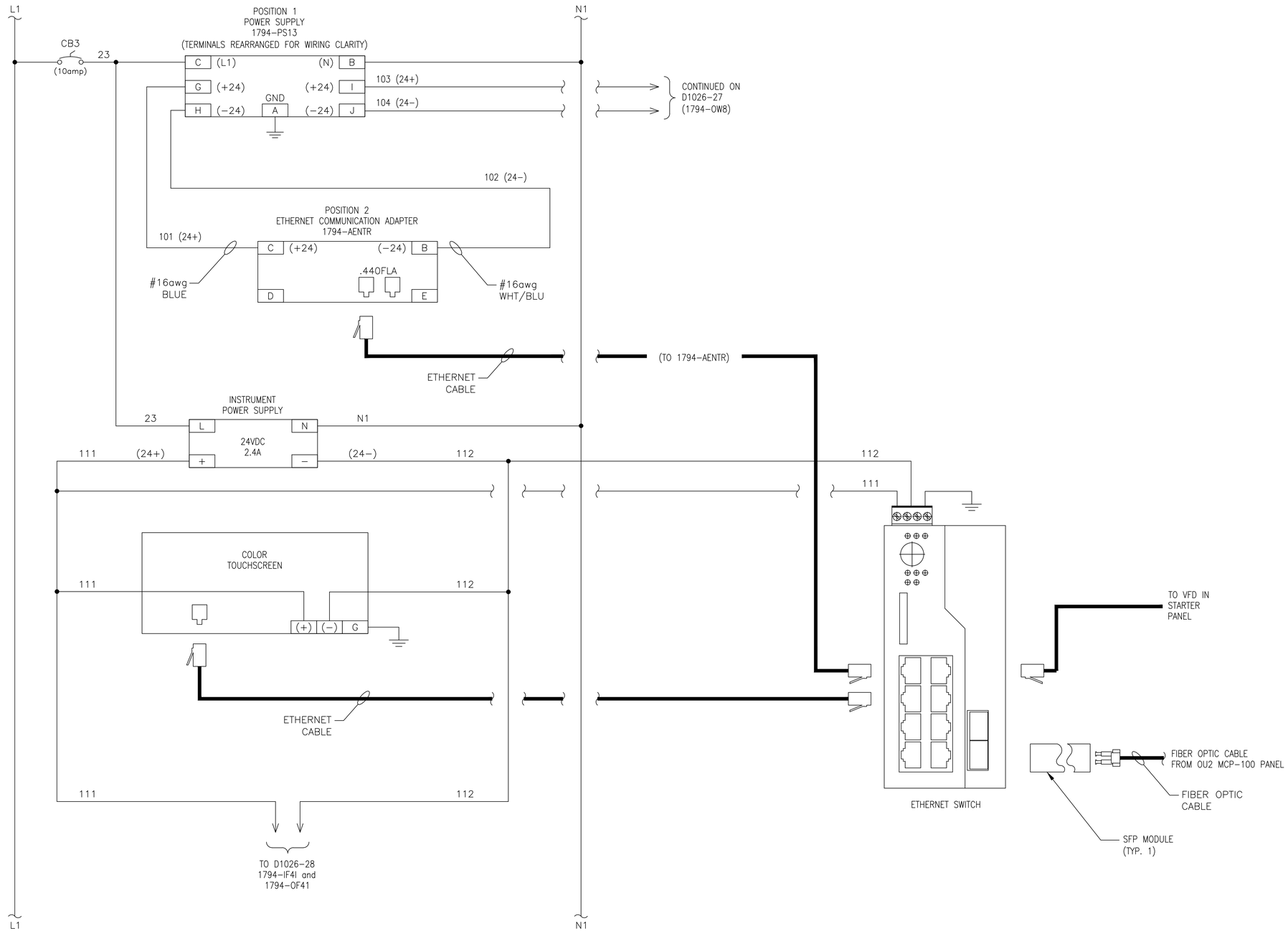

CONTINUED ON EI-686

THE SIGNATURE AND SEAL OF THE UNDERSIGNED ON THIS DRAWING CERTIFIES THAT THE DESIGN INFORMATION CONTAINED IN THESE DRAWINGS ACCURATELY REFLECTS THE ORIGINAL DESIGN AND THE MATERIAL DESIGN CHANGES MADE DURING CONSTRUCTION, THAT WERE BROUGHT TO THE UNDERSIGNED'S ATTENTION. THESE DRAWINGS ARE INTENDED TO INCORPORATE ADDENDA, CHANGE ORDERS AND OTHER MATERIAL DESIGN CHANGES, BUT NOT NECESSARILY ALL SITE INSTRUCTIONS. THE UNDERSIGNED DOES NOT WARRANT OR GUARANTEE, NOR ACCEPT ANY RESPONSIBILITY FOR THE ACCURACY OR COMPLETENESS OF THE CONSTRUCTION RECORD INFORMATION SUPPLIED BY OTHERS CONTAINED IN THESE DRAWINGS, BUT DOES CERTIFY THAT THE CONSTRUCTION RECORD INFORMATION, IF ACCURATE AND COMPLETE, PROVIDES A SYSTEM WHICH SUBSTANTIALLY COMPLIES IN ALL MATERIAL RESPECTS WITH THE ORIGINAL DESIGN INTENT."

STATE OF NEW YORK
JITENDRA M. PATEL
075431
LICENSED PROFESSIONAL ENGINEER
9/1/21

jitu.patel Digitally signed by jitu.patel DN: CN=jitu.patel Date: 2021.09.01 17:33:14-04'00'

NO.	DATE	REVISIONS	BY	CHK
	9/03/21	RECORD DRAWINGS	SCP	REM

DRAWN: NJG	PROJECT NO: 3671797453
ENGINEER: REM	SCALE: NOT APPLICABLE
CHECKED: SCP	APPROVED: S. PEARSON
DATE: 10/04/19	DATE:

amec
AMEC E & E PC
214-25 42nd Ave
Bayside, New York 11361

LOCKHEED MARTIN CORPORATION,
FORMER UNISYS FACILITY,
LAKE SUCCESS, NEW YORK
OPERABLE UNITS NO. 1 & 2
EXTRACTION / RECOVERY WELL ELECTRICAL UPGRADES

INSTRUMENTATION

WELL RW-100
REMOTE CONTROL PANEL
POWER DISTRIBUTION SCHEMATIC

EI-685

C:\Users\roger.rijuler\Wood PLC\Lockheed Martin Great Neck - 8.0_Drawings\Rev Electrical Upgrade Design\Sheets\EI-685.dwg Wed, 01 Sep 2021 - 1:39pm roger.rijuler

UNAUTHORIZED ALTERATION OR ADDITION TO THIS DOCUMENT IS A VIOLATION OF SECTION 7209 OF THE NEW YORK STATE EDUCATION LAW.

CONTINUED FROM EI-685

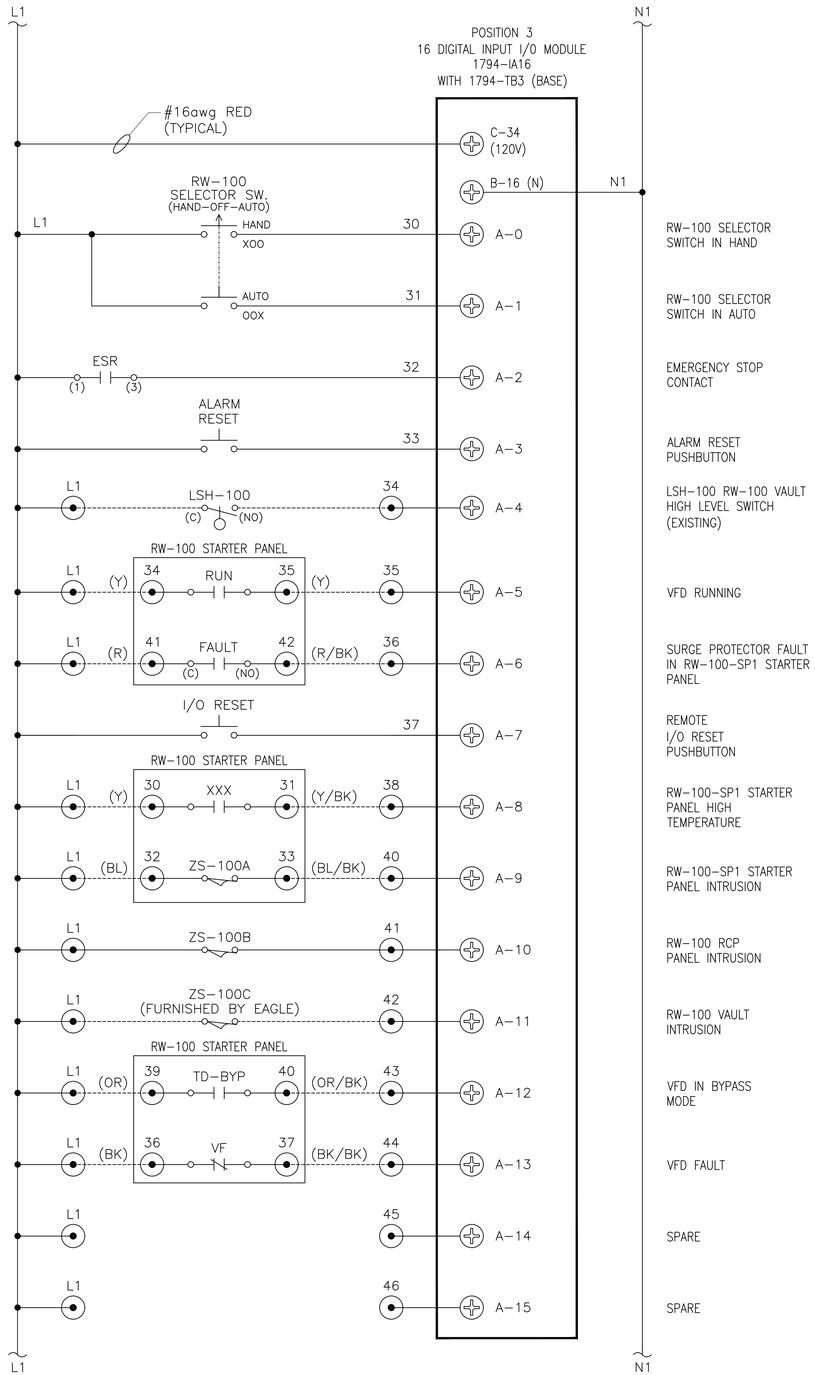

CONTINUED ABOVE RIGHT

CONTINUED FROM BELOW LEFT

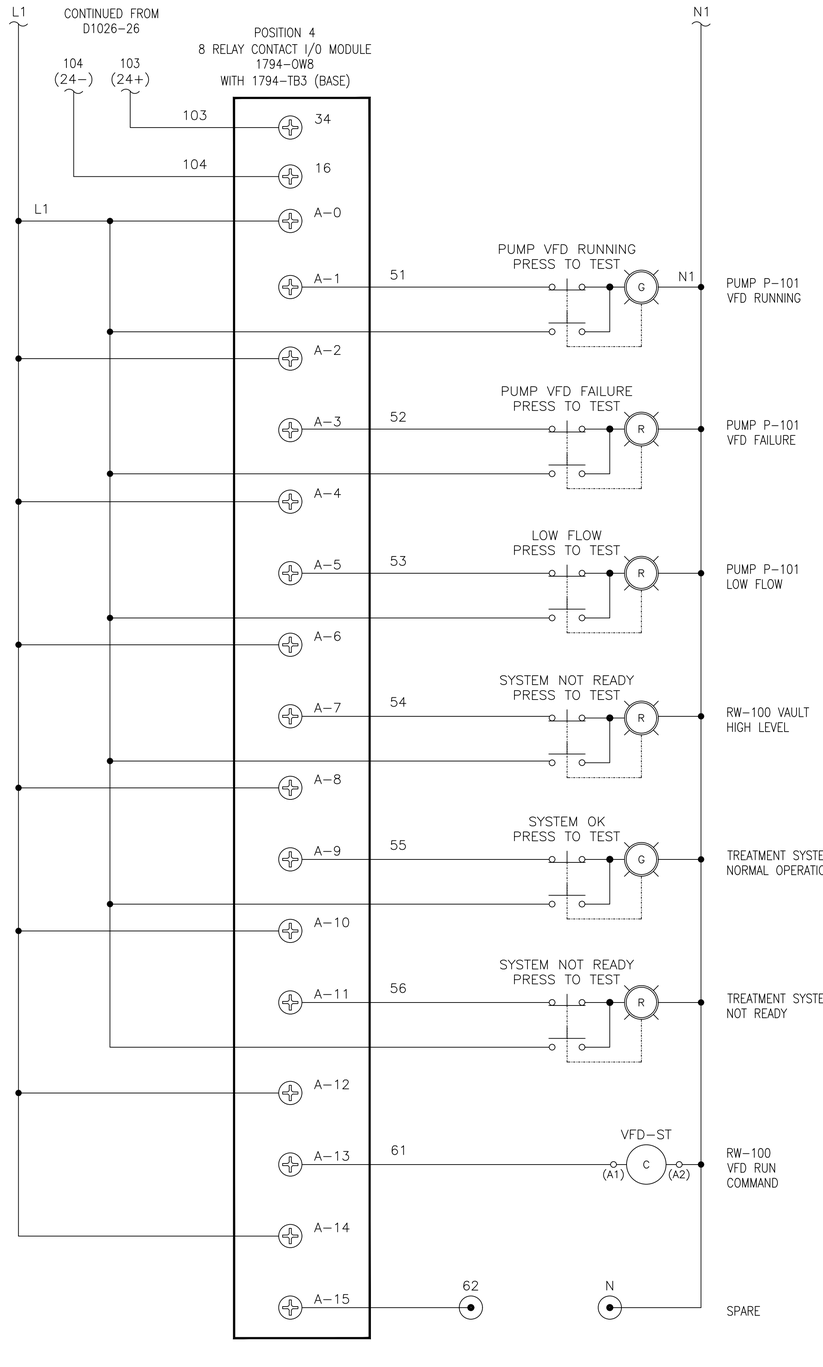



THE SIGNATURE AND SEAL OF THE UNDERSIGNED ON THIS DRAWING CERTIFIES THAT THE DESIGN INFORMATION CONTAINED IN THESE DRAWINGS ACCURATELY REFLECTS THE ORIGINAL DESIGN AND THE MATERIAL DESIGN CHANGES MADE DURING CONSTRUCTION, THAT WERE BROUGHT TO THE UNDERSIGNED'S ATTENTION. THESE DRAWINGS ARE INTENDED TO INCORPORATE ADDENDA, CHANGE ORDERS AND OTHER MATERIAL DESIGN CHANGES, BUT NOT NECESSARILY ALL SITE INSTRUCTIONS. THE UNDERSIGNED DOES NOT WARRANT OR GUARANTEE, NOR ACCEPT ANY RESPONSIBILITY FOR THE ACCURACY OR COMPLETENESS OF THE CONSTRUCTION RECORD INFORMATION SUPPLIED BY OTHERS CONTAINED IN THESE DRAWINGS, BUT DOES CERTIFY THAT THE CONSTRUCTION RECORD INFORMATION, IF ACCURATE AND COMPLETE, PROVIDES A SYSTEM WHICH SUBSTANTIALLY COMPLIES IN ALL MATERIAL RESPECTS WITH THE ORIGINAL DESIGN INTENT.*

NO.	DATE	REVISIONS	BY	CHK
	9/03/21	RECORD DRAWINGS	SCP	REM

DRAWN: NJG	PROJECT NO: 3671797453
ENGINEER: REM	SCALE: NOT APPLICABLE
CHECKED: SCP	APPROVED: S. PEARSON
DATE: 10/04/19	DATE:

amec
AMEC E & E PC
214-25 42nd Ave
Bayside, New York 11361

LOCKHEED MARTIN CORPORATION,
FORMER UNISYS FACILITY,
LAKE SUCCESS, NEW YORK
OPERABLE UNITS NO. 1 & 2
EXTRACTION / RECOVERY WELL ELECTRICAL UPGRADES

INSTRUMENTATION

WELL RW-100
REMOTE CONTROL PANEL
DIGITAL I/O SCHEMATIC

EI-686

G:\Users\roger.rigler\Wood PLC\Lockheed Martin Great Neck - R.D. Drawings\Rev Electrical Upgrade Design\Sheets\EI-686.dwg Wed, 01 Sep 2021 - 1:39pm roger.rigler

UNAUTHORIZED ALTERATION OR ADDITION TO THIS DOCUMENT IS A VIOLATION OF SECTION 7209 OF THE NEW YORK STATE EDUCATION LAW.

CONTINUED FROM EI-686

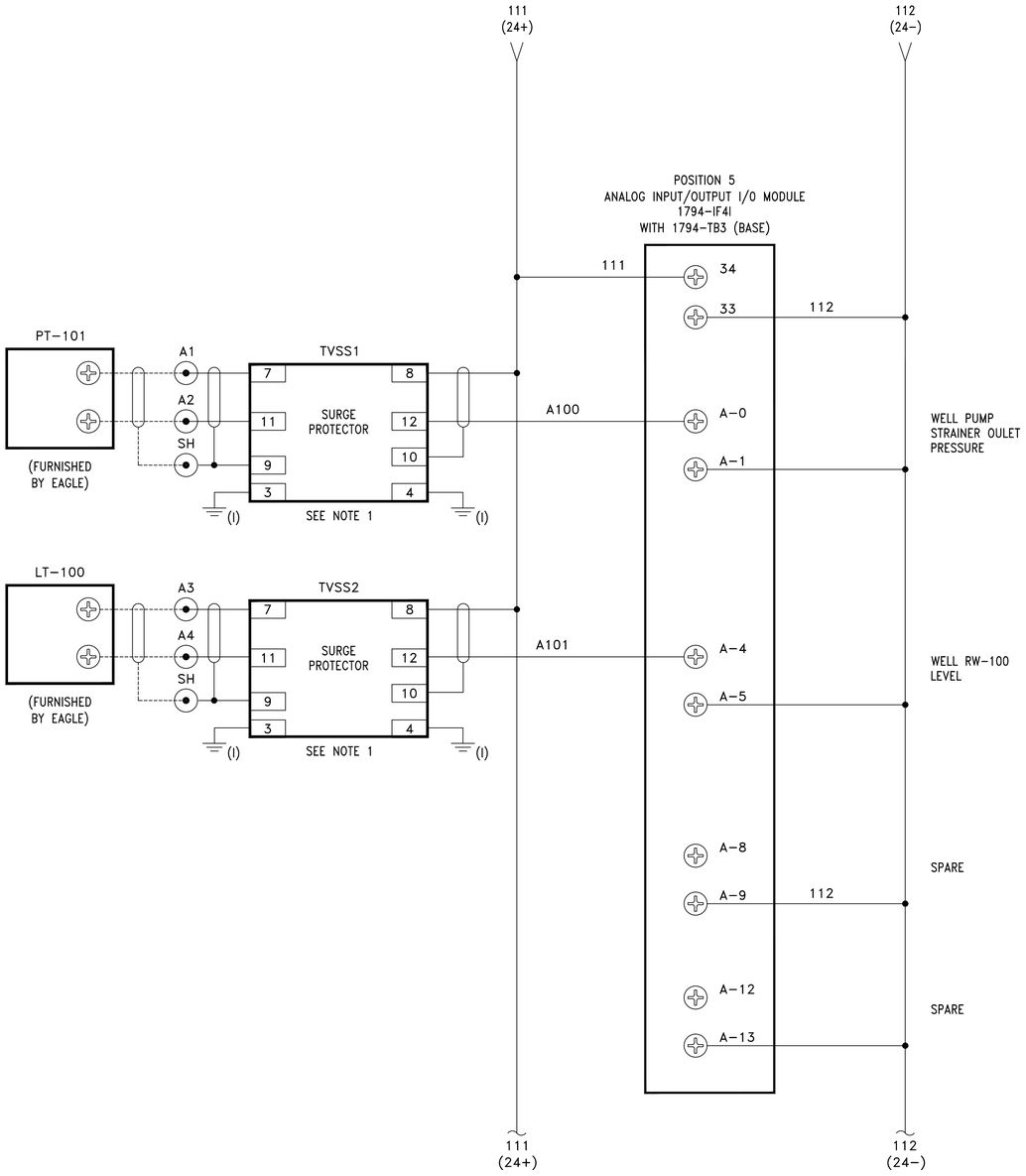

CONTINUED FROM BELOW LEFT

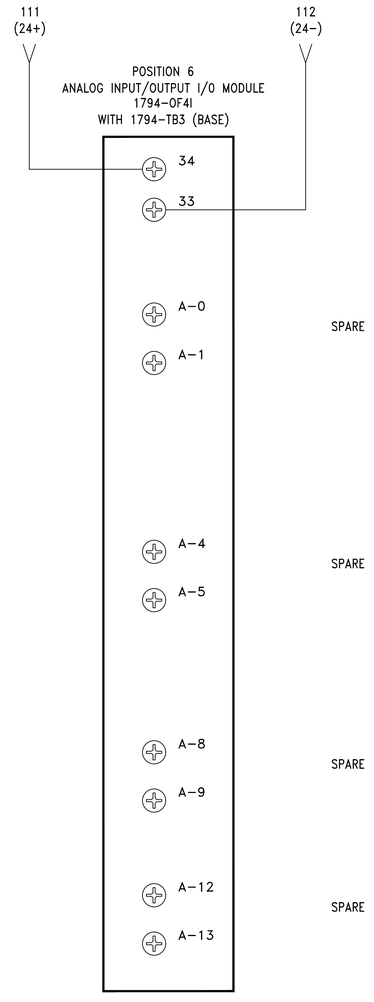

CONTINUED ABOVE RIGHT

THE SIGNATURE AND SEAL OF THE UNDERSIGNED ON THIS DRAWING CERTIFIES THAT THE DESIGN INFORMATION CONTAINED IN THESE DRAWINGS ACCURATELY REFLECTS THE ORIGINAL DESIGN AND THE MATERIAL DESIGN CHANGES MADE DURING CONSTRUCTION, THAT WERE BROUGHT TO THE UNDERSIGNED'S ATTENTION. THESE DRAWINGS ARE INTENDED TO INCORPORATE ADDENDA, CHANGE ORDERS AND OTHER MATERIAL DESIGN CHANGES, BUT NOT NECESSARILY ALL SITE INSTRUCTIONS. THE UNDERSIGNED DOES NOT WARRANT OR GUARANTEE, NOR ACCEPT ANY RESPONSIBILITY FOR THE ACCURACY OR COMPLETENESS OF THE CONSTRUCTION RECORD INFORMATION SUPPLIED BY OTHERS CONTAINED IN THESE DRAWINGS, BUT DOES CERTIFY THAT THE CONSTRUCTION RECORD INFORMATION, IF ACCURATE AND COMPLETE, PROVIDES A SYSTEM WHICH SUBSTANTIALLY COMPLIES IN ALL MATERIAL RESPECTS WITH THE ORIGINAL DESIGN INTENT."

STATE OF NEW YORK
JITUBHAI M. PATEL
075431
LICENSED PROFESSIONAL ENGINEER
9/1/21

jitu.patel Digitally signed by jitu.patel DN: CN=jitu.patel Date: 2021.09.01 17:33:42-04'00'

NO.	DATE	REVISIONS	BY	CHK
	9/03/21	RECORD DRAWINGS	SCP	REM

DRAWN: NJG	PROJECT NO: 3671797453
ENGINEER: REM	SCALE: NOT APPLICABLE
CHECKED: SCP	APPROVED: S. PEARSON
DATE: 10/04/19	DATE:

amec
AMEC E & E PC
214-25 42nd Ave
Bayside, New York 11361

LOCKHEED MARTIN CORPORATION,
FORMER UNISYS FACILITY,
LAKE SUCCESS, NEW YORK
OPERABLE UNITS NO. 1 & 2
EXTRACTION / RECOVERY WELL ELECTRICAL UPGRADES

INSTRUMENTATION

WELL RW-100
REMOTE CONTROL PANEL
ANALOG I/O SCHEMATIC

EI-687

C:\Users\roger.rigler\Wood PLC\Lockheed Martin Great Neck - R.A. Drawings\Rev. Electrical Upgrade Design\Sheets\EI-687.dwg Wed, 01 Sep 2021 - 1:39pm roger.rigler

UNAUTHORIZED ALTERATION OR ADDITION TO THIS DOCUMENT IS A VIOLATION OF SECTION 7209 OF THE NEW YORK STATE EDUCATION LAW.

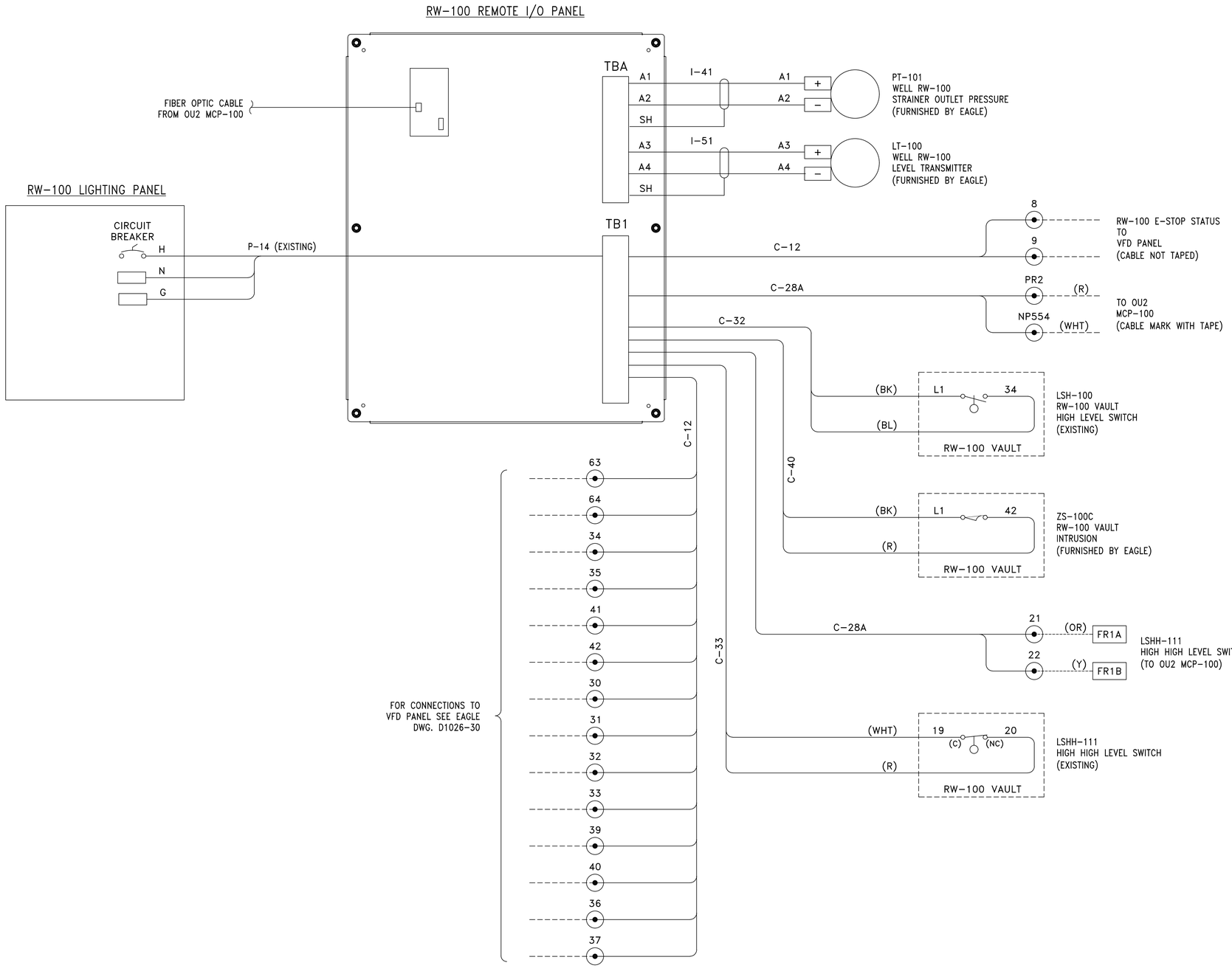

THE SIGNATURE AND SEAL OF THE UNDERSIGNED ON THIS DRAWING CERTIFIES THAT THE DESIGN INFORMATION CONTAINED IN THESE DRAWINGS ACCURATELY REFLECTS THE ORIGINAL DESIGN AND THE MATERIAL DESIGN CHANGES MADE DURING CONSTRUCTION, THAT WERE BROUGHT TO THE UNDERSIGNED'S ATTENTION. THESE DRAWINGS ARE INTENDED TO INCORPORATE ADDENDA, CHANGE ORDERS AND OTHER MATERIAL DESIGN CHANGES, BUT NOT NECESSARILY ALL SITE INSTRUCTIONS. THE UNDERSIGNED DOES NOT WARRANT OR GUARANTEE, NOR ACCEPT ANY RESPONSIBILITY FOR THE ACCURACY OR COMPLETENESS OF THE CONSTRUCTION RECORD INFORMATION SUPPLIED BY OTHERS CONTAINED IN THESE DRAWINGS, BUT DOES CERTIFY THAT THE CONSTRUCTION RECORD INFORMATION, IF ACCURATE AND COMPLETE, PROVIDES A SYSTEM WHICH SUBSTANTIALLY COMPLIES IN ALL MATERIAL RESPECTS WITH THE ORIGINAL DESIGN INTENT."

NO.	DATE	REVISIONS	BY	CHK
	9/03/21	RECORD DRAWINGS	SCP	REM

DRAWN: NJG
ENGINEER: REM
CHECKED: SCP
DATE: 10/04/19
PROJECT NO: 3671797453
SCALE: NOT APPLICABLE
APPROVED: S. PEARSON
DATE:

amec
AMEC E & E PC
214-25 42nd Ave
Bayside, New York 11361

LOCKHEED MARTIN CORPORATION,
FORMER UNISYS FACILITY,
LAKE SUCCESS, NEW YORK
OPERABLE UNITS NO. 1 & 2
EXTRACTION / RECOVERY WELL ELECTRICAL UPGRADES

INSTRUMENTATION

WELL RW-100
REMOTE CONTROL PANEL
INTERCONNECTION WIRING DIAGRAM SHEET 1

EI-688

JITENDRA M. PATEL
STATE OF NEW YORK
075431
LICENSED PROFESSIONAL ENGINEER
9/1/21
jitu.patel
Digitally signed by jitu.patel
DN: CN=jitu.patel
Date: 2021.09.01 17:33:57-04'00'

P:\Users\roger.rigler\Wood PLC\Lockheed Martin Great Neck - R.O. Drawings\Rev. Electrical Upgrade Design\Sheets\EI-688.dwg Wed, 01 Sep 2021 - 1:39pm roger.rigler

UNAUTHORIZED ALTERATION OR ADDITION TO THIS DOCUMENT IS A VIOLATION OF SECTION 7209 OF THE NEW YORK STATE EDUCATION LAW.

P:\Users\roger.riguler\Wood PLC\Lockheed Martin Great Neck - R.O. Drawings\Rev. Electrical Upgrade Design\Sheets\EI-689.dwg Wed, 01 Sep 2021 - 1:39pm roger.riguler

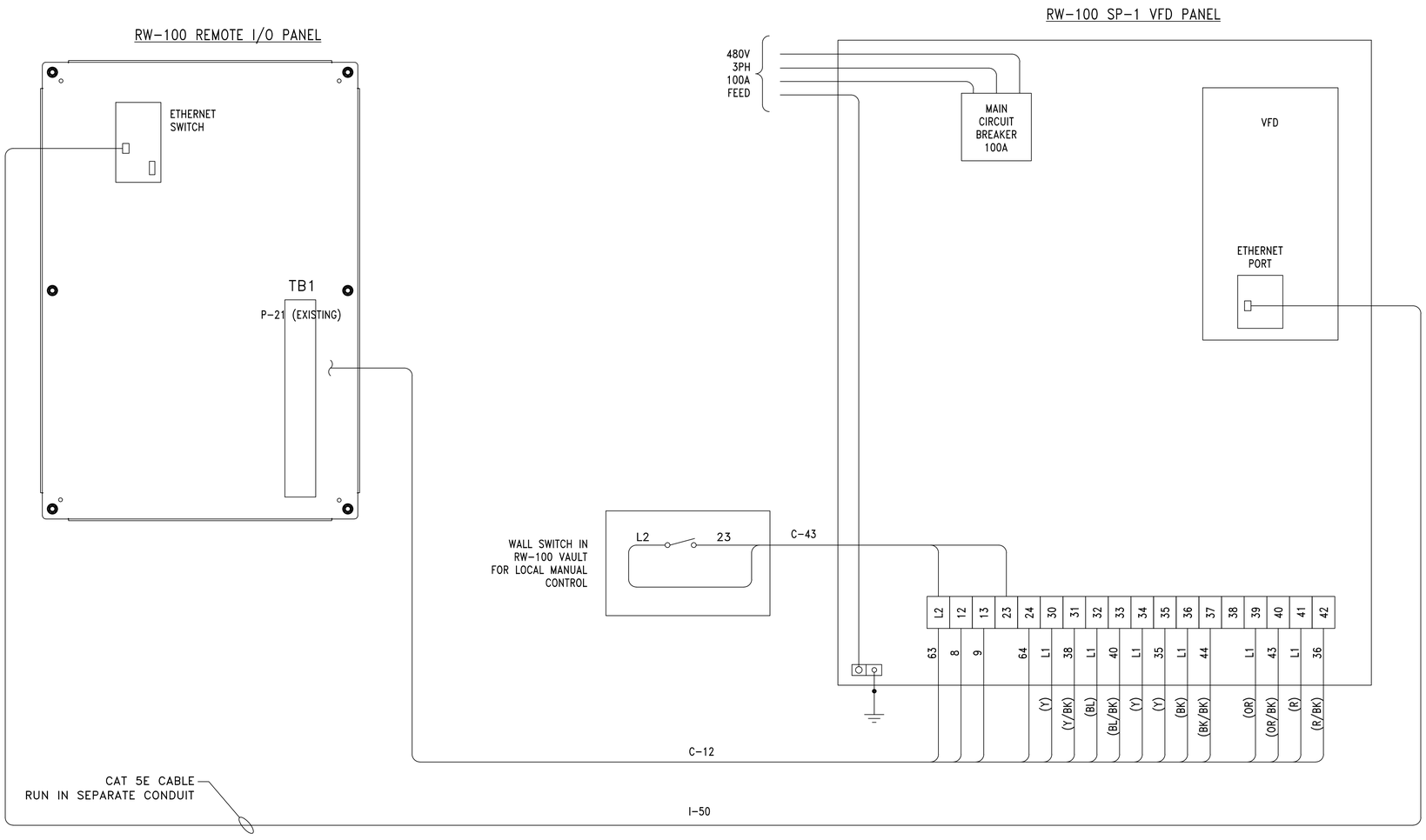



THE SIGNATURE AND SEAL OF THE UNDERSIGNED ON THIS DRAWING CERTIFIES THAT THE DESIGN INFORMATION CONTAINED IN THESE DRAWINGS ACCURATELY REFLECTS THE ORIGINAL DESIGN AND THE MATERIAL DESIGN CHANGES MADE DURING CONSTRUCTION, THAT WERE BROUGHT TO THE UNDERSIGNED'S ATTENTION. THESE DRAWINGS ARE INTENDED TO INCORPORATE ADDENDA, CHANGE ORDERS AND OTHER MATERIAL DESIGN CHANGES, BUT NOT NECESSARILY ALL SITE INSTRUCTIONS. THE UNDERSIGNED DOES NOT WARRANT OR GUARANTEE, NOR ACCEPT ANY RESPONSIBILITY FOR THE ACCURACY OR COMPLETENESS OF THE CONSTRUCTION RECORD INFORMATION SUPPLIED BY OTHERS CONTAINED IN THESE DRAWINGS, BUT DOES CERTIFY THAT THE CONSTRUCTION RECORD INFORMATION, IF ACCURATE AND COMPLETE, PROVIDES A SYSTEM WHICH SUBSTANTIALLY COMPLIES IN ALL MATERIAL RESPECTS WITH THE ORIGINAL DESIGN INTENT."

NO.	DATE	REVISIONS	BY	CHK
	9/03/21	RECORD DRAWINGS	SCP	REM

DRAWN: NJG	PROJECT NO: 3671797453
ENGINEER: REM	SCALE: NOT APPLICABLE
CHECKED: SCP	APPROVED: S. PEARSON
DATE: 10/04/19	DATE:

amec
AMEC E & E PC
214-25 42nd Ave
Bayside, New York 11361

LOCKHEED MARTIN CORPORATION,
FORMER UNISYS FACILITY,
LAKE SUCCESS, NEW YORK
OPERABLE UNITS NO. 1 & 2
EXTRACTION / RECOVERY WELL ELECTRICAL UPGRADES

INSTRUMENTATION

WELL RW-100
REMOTE CONTROL PANEL
INTERCONNECTION WIRING DIAGRAM SHEET 2

EI-689

UNAUTHORIZED ALTERATION OR ADDITION TO THIS DOCUMENT IS A VIOLATION OF SECTION 7209 OF THE NEW YORK STATE EDUCATION LAW.

NOTES:

1. SEE SHEET EI-001 FOR LEGEND, ABBREVIATIONS, AND GENERAL NOTES.
2. REPLACED ETHERNET SWITCHES & MEDIA CONVERTERS

NOTE: REPLACE EXISTING ETHERNET SWITCH AND MEDIA CONVERTERS WITH NEW MANAGED ETHERNET SWITCH.

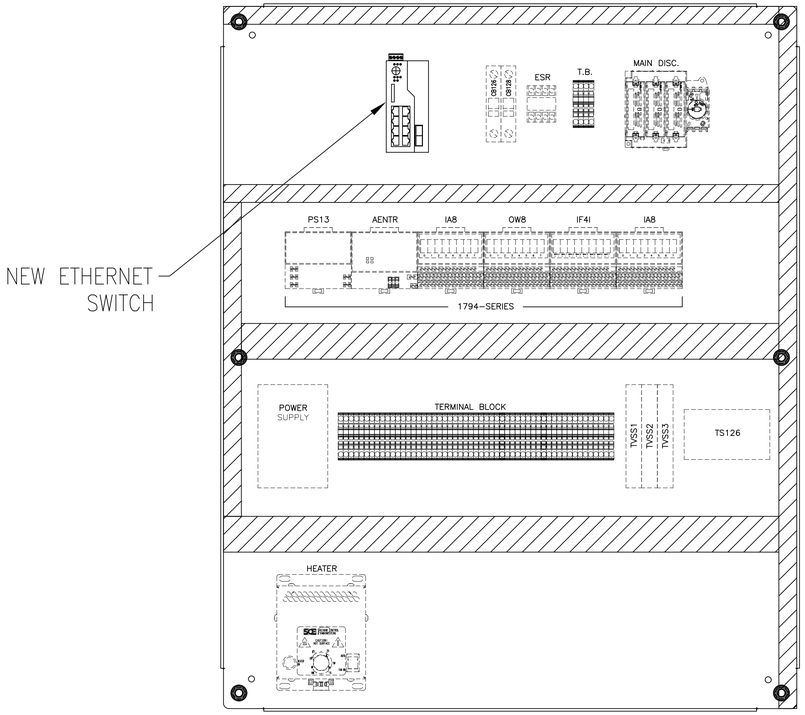

SUB PANEL ARRANGEMENT

SCALE 1/4" = 1"

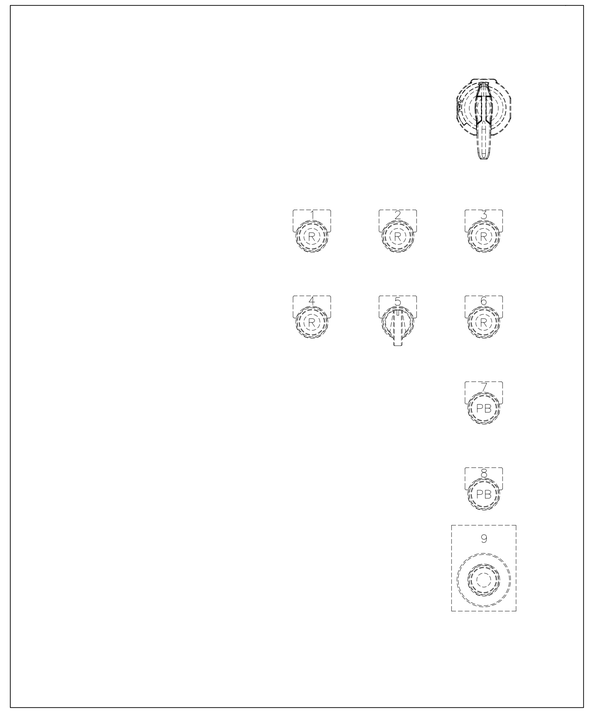

DEAD FRONT PANEL ARRANGEMENT

SCALE 1/4" = 1"

THE SIGNATURE AND SEAL OF THE UNDERSIGNED ON THIS DRAWING CERTIFIES THAT THE DESIGN INFORMATION CONTAINED IN THESE DRAWINGS ACCURATELY REFLECTS THE ORIGINAL DESIGN AND THE MATERIAL DESIGN CHANGES MADE DURING CONSTRUCTION, THAT WERE BROUGHT TO THE UNDERSIGNED'S ATTENTION. THESE DRAWINGS ARE INTENDED TO INCORPORATE ADDENDA, CHANGE ORDERS AND OTHER MATERIAL DESIGN CHANGES, BUT NOT NECESSARILY ALL SITE INSTRUCTIONS. THE UNDERSIGNED DOES NOT WARRANT OR GUARANTEE, NOR ACCEPT ANY RESPONSIBILITY FOR THE ACCURACY OR COMPLETENESS OF THE CONSTRUCTION RECORD INFORMATION SUPPLIED BY OTHERS CONTAINED IN THESE DRAWINGS, BUT DOES CERTIFY THAT THE CONSTRUCTION RECORD INFORMATION, IF ACCURATE AND COMPLETE, PROVIDES A SYSTEM WHICH SUBSTANTIALLY COMPLIES IN ALL MATERIAL RESPECTS WITH THE ORIGINAL DESIGN INTENT."

STATE OF NEW YORK
JITENDRA M. PATEL
075431
LICENSED PROFESSIONAL ENGINEER
9/1/21

jitu.patel Digitally signed by jitu.patel DN: CN=jitu.patel Date: 2021.09.01 17:34:26-04'00'

NO.	DATE	REVISIONS	BY	CHK
	9/03/21	RECORD DRAWINGS	SCP	REM

DRAWN: AJF	PROJECT NO: 3617197453
ENGINEER: REM	SCALE: NOT APPLICABLE
CHECKED: SCP	APPROVED: S. PEARSON
DATE: 10/04/19	DATE:

AMEC E & E PC
214-25 42nd Ave
Bayside, New York 11361

LOCKHEED MARTIN CORPORATION,
FORMER UNISYS FACILITY,
LAKE SUCCESS, NEW YORK
OPERABLE UNITS NO. 1 & 2
EXTRACTION / RECOVERY WELL ELECTRICAL UPGRADES

INSTRUMENTATION
WELL RW-3
REMOTE CONTROL PANEL
PANEL ARRANGEMENT MODIFICATIONS

EI-690

C:\Users\roger.riquier\Wood PLC\Lockheed Martin Great Neck - 8.0_Drawings\Rev Electrical Upgrade Design\Sheets\EI-690.dwg Wed, 01 Sep 2021 - 1:39pm roger.riquier

UNAUTHORIZED ALTERATION OR ADDITION TO THIS DOCUMENT IS A VIOLATION OF SECTION 7209 OF THE NEW YORK STATE EDUCATION LAW.

NOTES:

1. SEE SHEET EI-001 FOR LEGEND, ABBREVIATIONS, AND GENERAL NOTES.
2. REPLACED ETHERNET SWITCH & MEDIA CONVERTERS.

Item	Qty	Manufacturer	Part Number	Description	Device
1	1	Hoffman	A36H3012SS6LP3PT	36" x 30" x 12" 316L Stainless Steel Enclosure	
2	2	Hoffman	A36P30SS6	Stainless Steel Sub Panel	
3	1	Hoffman	ADK30SS6	Stainless Steel, Drip Shield	
4	1	Custom	Sun Shield	Stainless Steel Sun Shade	
5	1	Hoffman	LEDA1S35	120VAC, Enclosure Light	LT1
6	1	Allen Bradley	194R-N30-1753	30A, Non Fused Disconnect	DISC
7	1	Allen Bradley	194R-S1	12" Shaft	DISC
8	1	Allen Bradley	194R-PY	Red/Yellow Handle	DISC
9	1	Hoffman	ANADFK	Swing out Panel Hinge Kit	
10	1	Hoffman	HF0516414	24CFM, 115VAC Fan	FAN
11	2	Hoffman	HH05SS04001	Stainless Steel Fan Shroud	
12	1	Hoffman	HG0500404	Exhaust Grille	
13	1	Hoffman	ADLTEMP	Heat & Cool Thermostat	TS126
14	1	Allen Bradley	1492-SPM1C010	1P, 1 Amp UL1077 Circuit Breaker	CB128
15	1	Allen Bradley	1492-SPM1C020	1P, 2 Amp UL1077 Circuit Breaker	CB126
16	1	Allen Bradley	800H-QR2H2G	Green, PTT, Pilot Light, LED	120VAC Power
17	1	Allen Bradley	800H-QR2H2G	Green, PTT, Pilot Light, LED	Pump Running
18	3	Allen Bradley	800H-QR2H2R	Red, PTT, Pilot Light, LED	Hi Level, Low Flow, Pump Fail
19	1	Allen Bradley	800H-JR2KC1B	3 Position, Maintained Selector Switch	HOR
20	2	Allen Bradley	800H-AR2A	Black, Pushbutton, 1NO/1NC Contact	Alarm Reset, Remote IO Reset
21	1	Allen Bradley	800H-FRXT6A5	Red, 40mm, Twist to Release Pushbutton, 2 NCLB	E-Stop
22	2	Allen Bradley	700-HF34A1	4P, 120VAC, 10A Control relay	MCR, CR231
23	2	Allen Bradley	700-HN139	4P, Relay Base	MCR, CR231
24	1	Allen Bradley	1606-XLP50E	2.1 Amp Power Supply	PS
25	1	Allen Bradley	1794-PS13	Flex I/O, Power Supply	
26	1	Allen Bradley	1794-AENTR	Flex I/O, Ethernet Adapter	
27	2	Allen Bradley	1794-IA8	Flex I/O, 8 Point AC Input Module	
28	1	Allen Bradley	1794-IF4I	Flex I/O, Analog Input Module	
29	1	Allen Bradley	1794-OW8	Flex I/O, 8 Point Relay Output Module	
30	4	Allen Bradley	1794-TB3	Flex I/O, Terminal Wiring base	
31	**1**	**Allen Bradley**	**1783-BMS10CGP**	**10 Port Managed Ethernet Switch with Fiber Ports**	**ENETSW**
32	**1**	**Allen Bradley**	**9313C-NMMS01T11**	**FactoryTalk Network Manager License**	**ENETSW**
33	**2**	**Allen Bradley**	**1783-SFP100FX**	**Fiber Transceiver Cartridge, 100Mbit, Multimode, LC Connector**	**ENETSW**
34	3	Citel	DLA-24D3	Analog, Surge Suppressor	**TVSS1,2, 3**
35	45	Allen Bradley	1492-J4	Terminal	
36	15	Allen Bradley	1492-JG4	GND Terminal	
37	4	Allen Bradley	1492-EAJ35	End Clamp	
38	1	Allen Bradley	1492-DR6	Raised Din Rail	
39	1	Hoffman	DAH2001A	120VAC, 200W Heater	**HTR**

SEE NOTE 2

STATE OF NEW YORK
JITENDRA M. PATEL
075431
LICENSED PROFESSIONAL ENGINEER
9/1/21

jitu.patel Digitally signed by jitu.patel DN: CN=jitu.patel Date: 2021.09.01 17:34:40-04'00'

THE SIGNATURE AND SEAL OF THE UNDERSIGNED ON THIS DRAWING CERTIFIES THAT THE DESIGN INFORMATION CONTAINED IN THESE DRAWINGS ACCURATELY REFLECTS THE ORIGINAL DESIGN AND THE MATERIAL DESIGN CHANGES MADE DURING CONSTRUCTION, THAT WERE BROUGHT TO THE UNDERSIGNED'S ATTENTION. THESE DRAWINGS ARE INTENDED TO INCORPORATE ADDENDA, CHANGE ORDERS AND OTHER MATERIAL DESIGN CHANGES, BUT NOT NECESSARILY ALL SITE INSTRUCTIONS. THE UNDERSIGNED DOES NOT WARRANT OR GUARANTEE, NOR ACCEPT ANY RESPONSIBILITY FOR THE ACCURACY OR COMPLETENESS OF THE CONSTRUCTION RECORD INFORMATION SUPPLIED BY OTHERS CONTAINED IN THESE DRAWINGS, BUT DOES CERTIFY THAT THE CONSTRUCTION RECORD INFORMATION, IF ACCURATE AND COMPLETE, PROVIDES A SYSTEM WHICH SUBSTANTIALLY COMPLIES IN ALL MATERIAL RESPECTS WITH THE ORIGINAL DESIGN INTENT."

NO.	DATE	REVISIONS	BY	CHK
	9/03/21	RECORD DRAWINGS	SCP	REM

DRAWN: AJF | PROJECT NO: 3617197453
ENGINEER: REM | SCALE: NOT APPLICABLE
CHECKED: SCP | APPROVED: S.PEARSON
DATE: 10/04/19 | DATE:

amec
AMEC E & E PC
214-25 42nd Ave
Bayside, New York 11361

LOCKHEED MARTIN CORPORATION,
FORMER UNISYS FACILITY,
LAKE SUCCESS, NEW YORK
OPERABLE UNITS NO. 1 & 2
EXTRACTION / RECOVERY WELL ELECTRICAL UPGRADES

INSTRUMENTATION

RW-3 REMOTE CONTROL PANEL
BILL OF MATERIALS

EI-691

C:\Users\roger.riquier\Wood PLC\Lockheed Martin Great Neck - 8.0_Drawings\Rev Electrical Upgrade Design\Sheets\EI-691.dwg Wed, 01 Sep 2021 - 1:39pm roger.riquier

UNAUTHORIZED ALTERATION OR ADDITION TO THIS DOCUMENT IS A VIOLATION OF SECTION 7209 OF THE NEW YORK STATE EDUCATION LAW.

C:\Users\roger.riquier\Wood PLC\Lockheed Martin Great Neck - R.O. Drawings\Rev Electrical Upgrade Design\Sheets\EI-692.dwg Wed, 01 Sep 2021 - 1:45pm roger.riquier

NOTES:

1. SEE SHEET EI-001 FOR LEGEND, ABBREVIATIONS, AND GENERAL NOTES.
2. REPLACED ETHERNET SWITCH & MEDIA CONVERTERS.

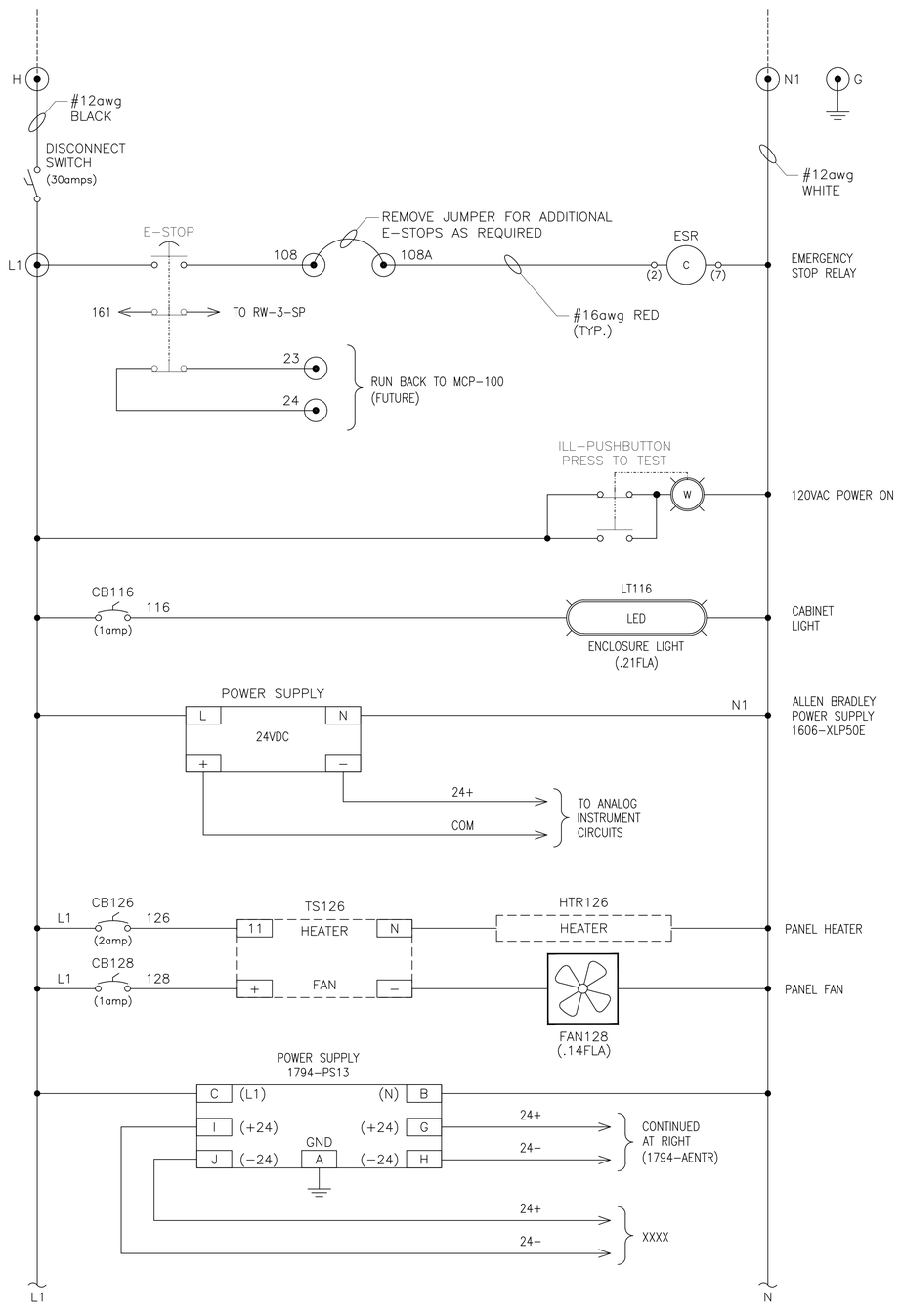

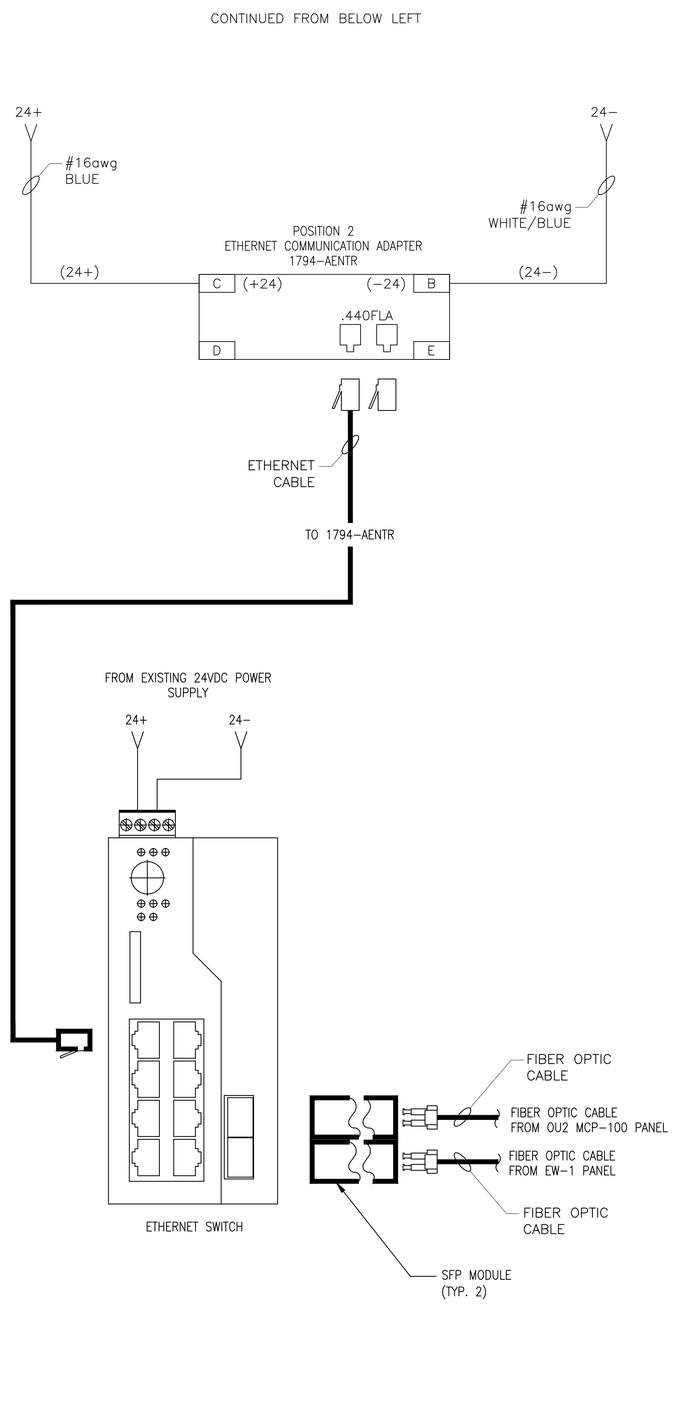



jitu.patel Digitally signed by jitu.patel DN: CN=jitu.patel Date: 2021.09.01 17:34:54-04'00'

THE SIGNATURE AND SEAL OF THE UNDERSIGNED ON THIS DRAWING CERTIFIES THAT THE DESIGN INFORMATION CONTAINED IN THESE DRAWINGS ACCURATELY REFLECTS THE ORIGINAL DESIGN AND THE MATERIAL DESIGN CHANGES MADE DURING CONSTRUCTION, THAT WERE BROUGHT TO THE UNDERSIGNED'S ATTENTION. THESE DRAWINGS ARE INTENDED TO INCORPORATE ADDENDA, CHANGE ORDERS AND OTHER MATERIAL DESIGN CHANGES, BUT NOT NECESSARILY ALL SITE INSTRUCTIONS. THE UNDERSIGNED DOES NOT WARRANT OR GUARANTEE, NOR ACCEPT ANY RESPONSIBILITY FOR THE ACCURACY OR COMPLETENESS OF THE CONSTRUCTION RECORD INFORMATION SUPPLIED BY OTHERS CONTAINED IN THESE DRAWINGS, BUT DOES CERTIFY THAT THE CONSTRUCTION RECORD INFORMATION, IF ACCURATE AND COMPLETE, PROVIDES A SYSTEM WHICH SUBSTANTIALLY COMPLIES IN ALL MATERIAL RESPECTS WITH THE ORIGINAL DESIGN INTENT."

NO.	DATE	REVISIONS	BY	CHK
	9/03/21	RECORD DRAWINGS	SCP	REM

DRAWN: AJF	PROJECT NO: 3617197453
ENGINEER: REM	SCALE: NOT APPLICABLE
CHECKED: SCP	APPROVED: S.PEARSON
DATE: 10/04/19	DATE:

amec
AMEC E & E PC
214-25 42nd Ave
Bayside, New York 11361

LOCKHEED MARTIN CORPORATION,
FORMER UNISYS FACILITY,
LAKE SUCCESS, NEW YORK
OPERABLE UNITS NO. 1 & 2
EXTRACTION / RECOVERY WELL ELECTRICAL UPGRADES

INSTRUMENTATION
WELL RW-3
REMOTE CONTROL PANEL
POWER WIRING SCHEMATIC MODIFICATIONS

EI-692

UNAUTHORIZED ALTERATION OR ADDITION TO THIS DOCUMENT IS A VIOLATION OF SECTION 7209 OF THE NEW YORK STATE EDUCATION LAW.

NOTES:

1. SEE SHEET EI-001 FOR LEGEND, ABBREVIATIONS, AND GENERAL NOTES.

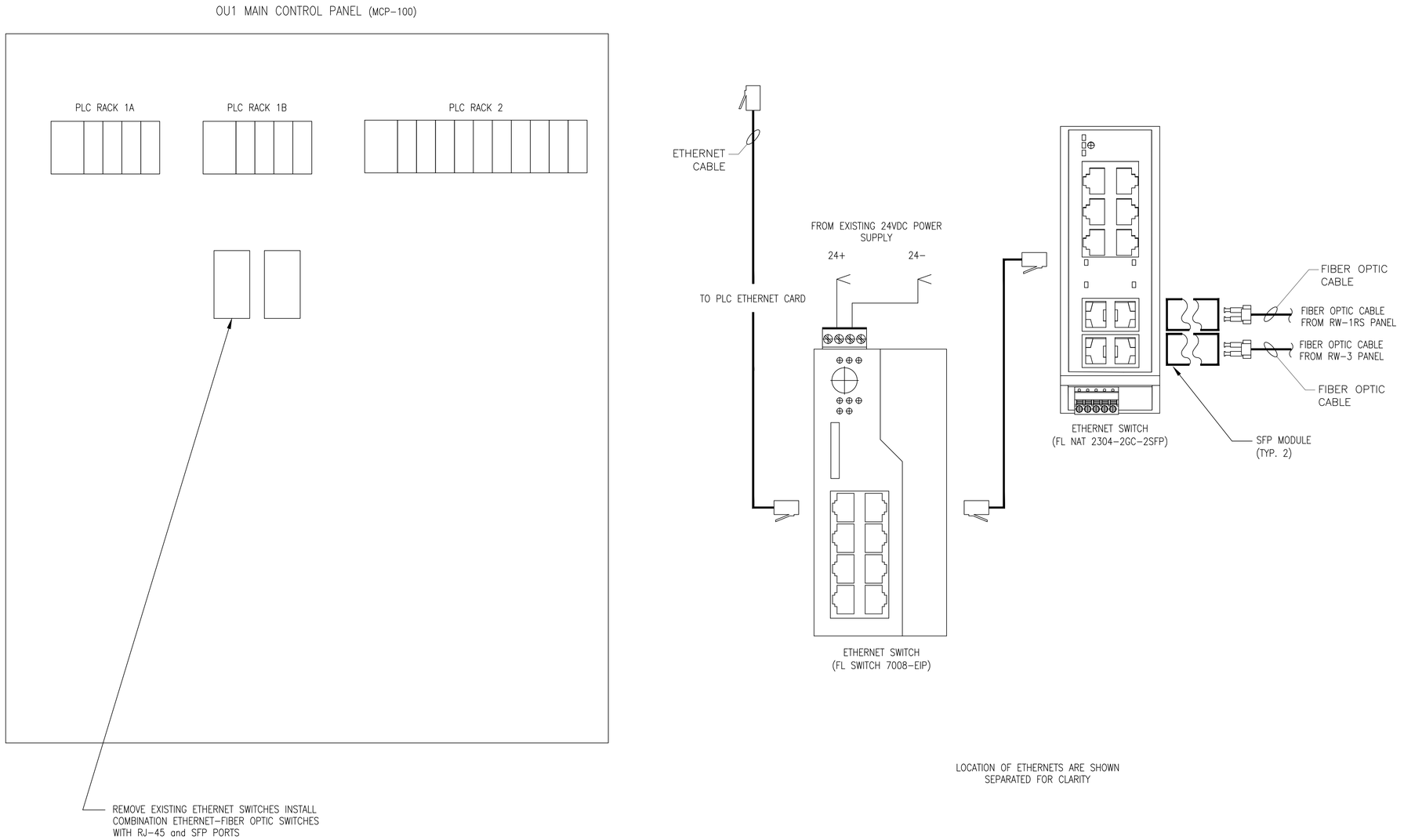

STATE OF NEW YORK
JITENDRA M. PATEL
LICENSED PROFESSIONAL ENGINEER
075431
9/1/21

jitu.patel Digitally signed by jitu.patel DN: CN=jitu.patel Date: 2021.09.01 17:35:11-04'00'

THE SIGNATURE AND SEAL OF THE UNDERSIGNED ON THIS DRAWING CERTIFIES THAT THE DESIGN INFORMATION CONTAINED IN THESE DRAWINGS ACCURATELY REFLECTS THE ORIGINAL DESIGN AND THE MATERIAL DESIGN CHANGES MADE DURING CONSTRUCTION, THAT WERE BROUGHT TO THE UNDERSIGNED'S ATTENTION. THESE DRAWINGS ARE INTENDED TO INCORPORATE ADDENDA, CHANGE ORDERS AND OTHER MATERIAL DESIGN CHANGES, BUT NOT NECESSARILY ALL SITE INSTRUCTIONS. THE UNDERSIGNED DOES NOT WARRANT OR GUARANTEE, NOR ACCEPT ANY RESPONSIBILITY FOR THE ACCURACY OR COMPLETENESS OF THE CONSTRUCTION RECORD INFORMATION SUPPLIED BY OTHERS CONTAINED IN THESE DRAWINGS, BUT DOES CERTIFY THAT THE CONSTRUCTION RECORD INFORMATION, IF ACCURATE AND COMPLETE, PROVIDES A SYSTEM WHICH SUBSTANTIALLY COMPLIES IN ALL MATERIAL RESPECTS WITH THE ORIGINAL DESIGN INTENT.*

NO.	DATE	REVISIONS	BY	CHK
	9/03/21	RECORD DRAWINGS	SCP	REM

DRAWN: AJF	PROJECT NO: 3617197453
ENGINEER: REM	SCALE: NOT APPLICABLE
CHECKED: SCP	APPROVED: S.PEARSON
DATE: 10/04/19	DATE:

amec
AMEC E & E PC
214-25 42nd Ave
Bayside, New York 11361

LOCKHEED MARTIN CORPORATION,
FORMER UNISYS FACILITY,
LAKE SUCCESS, NEW YORK
OPERABLE UNITS NO. 1 & 2
EXTRACTION / RECOVERY WELL ELECTRICAL UPGRADES

INSTRUMENTATION
OU1 MAIN CONTROL PANEL
COMMUNICATIONS NETWORK
MODIFICATIONS

EI-695

G:\Users\roger.rigler\Wood PLC\Lockheed Martin Great Neck - B.O. Drawings\Rev Electrical Upgrade Design\Sheets\EI-695.dwg Wed, 01 Sep 2021 - 1:45pm roger.rigler

UNAUTHORIZED ALTERATION OR ADDITION TO THIS DOCUMENT IS A VIOLATION OF SECTION 7209 OF THE NEW YORK STATE EDUCATION LAW.

NOTE:

1. SEE SHEET EI-001 FOR LEGEND, ABBREVIATIONS, AND GENERAL NOTES.

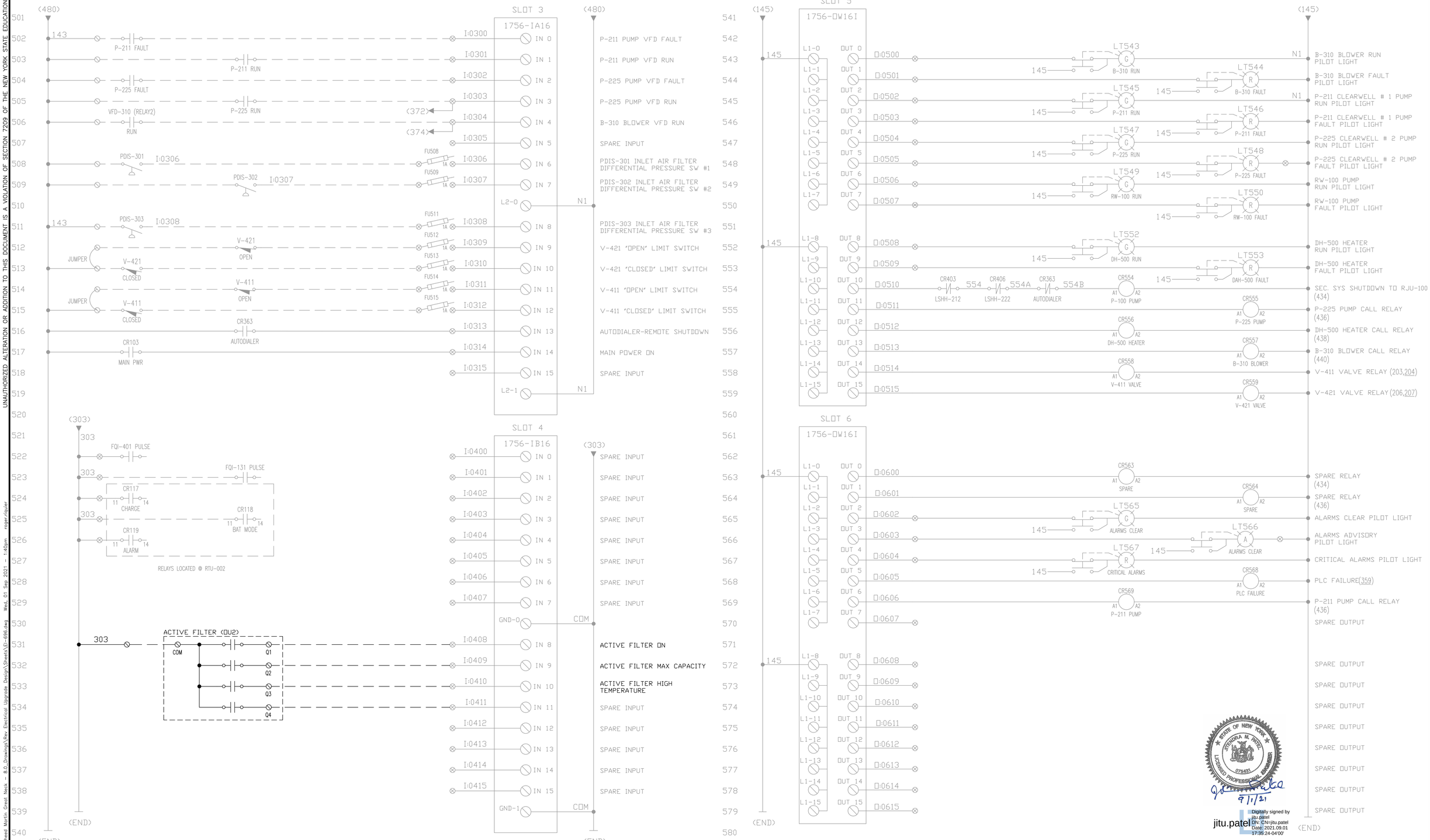

THE SIGNATURE AND SEAL OF THE UNDERSIGNED ON THIS DRAWING CERTIFIES THAT THE DESIGN INFORMATION CONTAINED IN THESE DRAWINGS ACCURATELY REFLECTS THE ORIGINAL DESIGN AND THE MATERIAL DESIGN CHANGES MADE DURING CONSTRUCTION, THAT WERE BROUGHT TO THE UNDERSIGNED'S ATTENTION. THESE DRAWINGS ARE INTENDED TO INCORPORATE ADDENDA, CHANGE ORDERS AND OTHER MATERIAL DESIGN CHANGES, BUT NOT NECESSARILY ALL SITE INSTRUCTIONS. THE UNDERSIGNED DOES NOT WARRANT OR GUARANTEE, NOR ACCEPT ANY RESPONSIBILITY FOR THE ACCURACY OR COMPLETENESS OF THE CONSTRUCTION RECORD INFORMATION SUPPLIED BY OTHERS CONTAINED IN THESE DRAWINGS, BUT DOES CERTIFY THAT THE CONSTRUCTION RECORD INFORMATION, IF ACCURATE AND COMPLETE, PROVIDES A SYSTEM WHICH SUBSTANTIALLY COMPLIES IN ALL MATERIAL RESPECTS WITH THE ORIGINAL DESIGN INTENT."

STATE OF NEW YORK
JITENDRA M. PATEL
079431
LICENSED PROFESSIONAL ENGINEER
9/1/21

Digitally signed by jitu.patel
DN: CN=jitu.patel
Date: 2021.09.01 17:35:24-04'00'

NO.	DATE	REVISIONS	BY	CHK
	9/03/21	RECORD DRAWINGS	SCP	REM

DRAWN: AJF	PROJECT NO: 3671797453
ENGINEER: REM	SCALE: NOT APPLICABLE
CHECKED: SCP	APPROVED: S. PEARSON
DATE: 11/19/19	DATE:

amec
AMEC E & E PC
214-25 42nd Ave
Bayside, New York 11361

LOCKHEED MARTIN CORPORATION,
FORMER UNISYS FACILITY,
LAKE SUCCESS, NEW YORK
OPERABLE UNITS NO. 1 & 2
EXTRACTION / RECOVERY WELL ELECTRICAL UPGRADES

INSTRUMENTATION

OU2 MAIN CONTROL PANEL (MCP)
WIRING DIAGRAM 5 - SLOTS 3, 4, 5, & 6

EI-696

C:\Users\roger.riquier\Wood PLC\Lockheed Martin Great Neck - R.O. Drawings\Rev. Electrical Upgrade Design\Sheets\EI-696.dwg Wed, 01 Sep 2021 - 1:45pm roger.riquier

UNAUTHORIZED ALTERATION OR ADDITION TO THIS DOCUMENT IS A VIOLATION OF SECTION 7209 OF THE NEW YORK STATE EDUCATION LAW.

NOTES:

1. SEE SHEET EI-001 FOR LEGEND, ABBREVIATIONS, AND GENERAL NOTES.

OU1 MOTOR CONTROL CENTER
ACTIVE FILTER

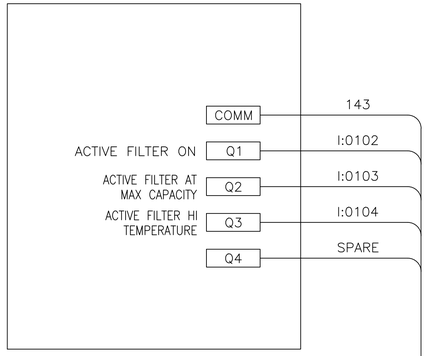

C61

OU1 MAIN CONTROL PANEL (MCP-100)

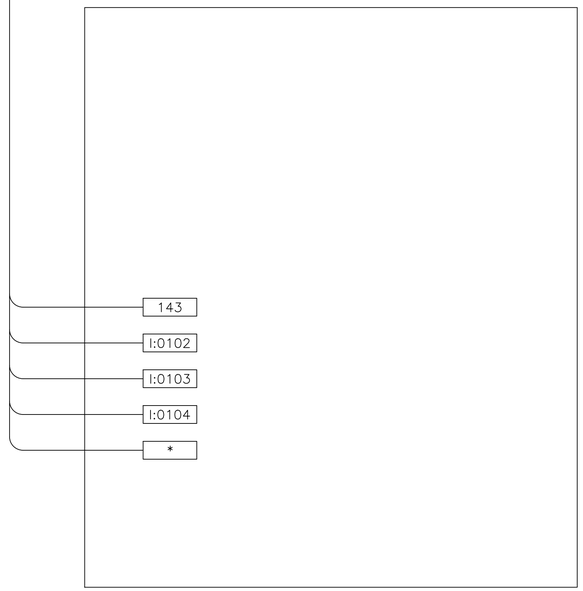

OU1 ACTIVE FILTER CONNECTIONS

OU2 MOTOR CONTROL CENTER
ACTIVE FILTER

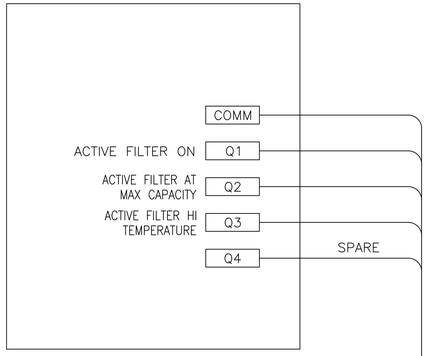

C41

OU2 MAIN CONTROL PANEL (MCP-100)

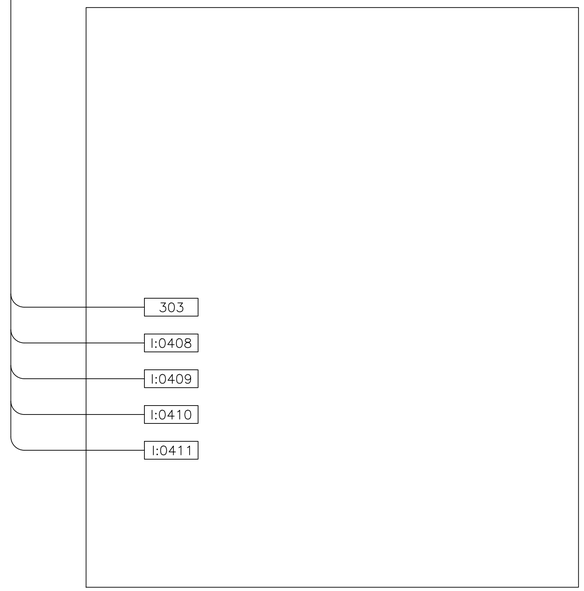

OU2 ACTIVE FILTER CONNECTIONS



jitu.patel Digitally signed by jitu.patel DN: CN=jitu.patel Date: 2021.09.01 17:35:41-04'00'

THE SIGNATURE AND SEAL OF THE UNDERSIGNED ON THIS DRAWING CERTIFIES THAT THE DESIGN INFORMATION CONTAINED IN THESE DRAWINGS ACCURATELY REFLECTS THE ORIGINAL DESIGN AND THE MATERIAL DESIGN CHANGES MADE DURING CONSTRUCTION, THAT WERE BROUGHT TO THE UNDERSIGNED'S ATTENTION. THESE DRAWINGS ARE INTENDED TO INCORPORATE ADDENDA, CHANGE ORDERS AND OTHER MATERIAL DESIGN CHANGES, BUT NOT NECESSARILY ALL SITE INSTRUCTIONS. THE UNDERSIGNED DOES NOT WARRANT OR GUARANTEE, NOR ACCEPT ANY RESPONSIBILITY FOR THE ACCURACY OR COMPLETENESS OF THE CONSTRUCTION RECORD INFORMATION SUPPLIED BY OTHERS CONTAINED IN THESE DRAWINGS, BUT DOES CERTIFY THAT THE CONSTRUCTION RECORD INFORMATION, IF ACCURATE AND COMPLETE, PROVIDES A SYSTEM WHICH SUBSTANTIALLY COMPLIES IN ALL MATERIAL RESPECTS WITH THE ORIGINAL DESIGN INTENT."

NO.	DATE	REVISIONS	BY	CHK
	9/03/21	RECORD DRAWINGS	SCP	REM

DRAWN: AJF	PROJECT NO: 3617197453
ENGINEER: REM	SCALE: NOT APPLICABLE
CHECKED: SCP	APPROVED: S.PEARSON
DATE: 10/04/19	DATE:

amec
AMEC E & E PC
214-25 42nd Ave
Bayside, New York 11361

LOCKHEED MARTIN CORPORATION,
FORMER UNISYS FACILITY,
LAKE SUCCESS, NEW YORK
OPERABLE UNITS NO. 1 & 2
EXTRACTION / RECOVERY WELL ELECTRICAL UPGRADES

INSTRUMENTATION
MCC ACTIVE FILTER
STATUS SIGNAL CONNECTIONS TO
PLC's AT OU1 AND OU2

EI-697

C:\Users\roger.rigler\Wood PLC\Lockheed Martin Great Neck - 8.0_Drawings\Rev Electrical Upgrade Design\Sheets\EI-697.dwg Wed, 01 Sep 2021 - 1:40pm roger.rigler

APPENDIX M

WASTE DOCUMENTATION

VEOLIA
ENVIRONMENTAL SERVICES

WASTESTREAM INFORMATION PROFILE

☐ Recertification

WIP Number

Originating Veolia ES Location: ____

☐ Invoice Address:

☐ Manifest from – blank if direct

Veolia ES TSDF requested ____ Technology requested ____ Generator No.____ **Generator EPA ID No. NYR000043521**

1. **Generator Name** Lockheed Martin Corporation **Generator State No.** ____ ____
   Address 1111 Marcus Avenue **State Wastestream No.**____
   City Lake Success **State** NY **Country** USA **ZIP** 11042
   NAICS (SIC) Code ____ ____ ____ **Source** ____ **Origin** ____ **Form** ____ **System Type** ____

2. **Waste Name** Soil **Lab or Waste Area**____

3. **Process Generating Waste** Metal & Debris from well maintenance & structural work.

4. **Shipping Name** NON HAZARDOUS METAL & DEBRIS - NON DOT REGULATED MATERIAL
   Hazard Class ____ **UN/NA No.**____ **PG**__ **RQ amt**____**lb**

RQ Additional Desc:	1.	2.
DOT Additional Desc:	1.	2.

5. **Waste Codes** ____ ____ ____ ____ ____ ____ ____ ____ ____ ____ ____ ____ ____

Wastewater ☐ **Non Wastewater** ☒ **Sub Category** ____

6. **Physical and chemical properties** *(check all that apply)*

pH
- a ☐ < 2
- b ☐ 2 - 5
- c ☒ 5 - 9
- d ☐ 9 - 12.5
- e ☐ > 12.5

7.6 exact

Specific Gravity
- a ☐ < .8
- b ☐ .8 - 1.0
- c ☐ 1.0
- d ☐ 1.0 - 1.2
- e ☒ > 1.2

Solid exact

Flash Point (F)
- a ☐ < 80
- b ☐ 80 - 100
- c ☐ 101 - 140
- d ☐ 141 - 200
- e ☐ > 200
- f ☒ no flash ____exact

Solids
- ____ % suspended
- 100 % settleable
- ____ % dissolved

Free Liquid Range 0 to 0%

- ___ % ash
- ____ water solubility
- ____ BTU/lb

Physical State
- s ☒ solid
- m ☐ semi-solid
- l ☐ liquid
- p ☐ pumpable semi-solid
- f ☐ flowable powder
- g ☐ gas
- a ☐ aerosol
- r ☐ pressurized liquid
- d ☐ debris per 40 CFR 268.45
- h ☐ sharps

Hazardous Characteristics
- a ☐ air reactive
- w ☐ water reactive
- c ☐ cyanide reactive
- f ☐ sulfide reactive
- e ☐ explosive
- o ☐ oxidizing acid
- p ☐ peroxide former
- r ☐ radioactive or NRC regulated
- s ☐ shock sensitive
- t ☐ temp sensitive
- m ☐ polymerization/monomer
- n ☐ OSHA carcinogen
- I ☐ infectious
- h ☐ inhalation hazard

Zone: _

Odor
- a none ☒
- b mild ☐
- c strong ☐

describe____

Halogens
- Br N/A % Bromine
- Cl N/A % Chlorine
- F N/A % Fluorine
- I N/A % Iodine

Layers: a ☐ **multilayered:** b ☐ **bi-layered:** c ☒ **single phase:**

Viscosity by Layer:	Top Layer	Second Layer	Bottom Layer
	☐ high (syrup)	☐ high (syrup)	☐ high (syrup)
	☐ medium (oil)	☐ medium (oil)	☐ medium (oil)
	☐ low (water)	☐ low (water)	☐ low (water)
	☒ solid	☐ solid	☐ solid

Color
Brown
____
____

Used oil y/n N **HOC <1000 ppm** ☒ **or > 1000 ppm** ☐

WIP No. _____

7. **Chemical Composition** [**M** = Marine Pollutant, **S** - Severe Marine Pollutant, **O** = Ozone Depleting Substance, **U** = Underlying Hazardous Constituent, **B** = Benzene NESHAP, **T** = TRI Chemical, **C** = **OSHA** Carcinogen]

	Constituents	Range	Units		Constituents	Range	Units
	Metal & Debris	100	100%				
			%				

Total Composition Must Equal or Exceed 100%

Other:

8. Is the wastestream being imported into the USA? Yes ☐ No ☒
9. Does the wastestream contain PCBs regulated by 40CFR? Yes ☐ No ☒
   Attach a completed PCB Certification Form
10. Is the wastestream subject to the Marine Pollutant Regulations? Yes ☐ No ☒
11. Is the wastestream subject to Benzene NESHAP? Yes ☐ No ☒
    If yes, is the wastestream subject to Notification and Control Requirements? Yes ☐ No ☒
    Benzene concentration _____ ppm
12. Is the wastestream subject to RCRA subpart CC controls? Yes ☐ No ☒
    Volatile organic concentration, if known _____ ppmw
    CC approved analytical method ☒ Generator Knowledge ☐
13. Is the wastestream from a CERCLA or state mandated cleanup? Yes ☒ No ☐

14. **Container Information** (*Identify UN container marking if known*)
    Packaging: Bulk Solid ☐ Type/Size: **Cubic Yard Box** **Bulk Liquid** ☐ Type/Size: _____ **Drum** ☐ Type/Size: _____
    Other _____
    Shipping Frequency: Units **1** Per Month ☐ Quarter ☐ Year ☐ One Time ☒ Other _____

15. **Additional Information**: _____

Is analytical or an MSDS available that describes the waste? Yes ☒ No ☐ If yes, please attach.

GENERATOR CERTIFICATION

I hereby certify that all information submitted in this and all attached documents contains true and accurate descriptions of this waste. Any sample submitted is representative as defined in 40 CFR 261 - Appendix I or by using an equivalent method. All relevant information regarding known or suspected hazards in the possession of the generator has been disclosed. I authorize sampling of any waste shipment for purposes of recertification.

Glenda B. Clark	817-378-2573	July 8, 2021
NAME (PRINT OR TYPE)	**PHONE**	**DATE**
Glenda B Clark	Project Lead	
SIGNATURE	**TITLE**	

FACILITY NOTIFICATION

If approved for management, Veolia ES has all the necessary permits and licenses for the waste that has been characterized and identified by this profile.

TSDF PROCESSING USE ONLY: PPE REQUIRED No _____ Yes _____ Describe _____

WIP No. _____

VEOLIA
ENVIRONMENTAL SERVICES

WASTESTREAM INFORMATION PROFILE

☐ Recertification

WIP Number _____

Originating Veolia ES Location: _____

☐ Invoice Address:

☐ Manifest from – blank if direct

Veolia ES TSDF requested _____ Technology requested _____ Generator No._____ **Generator EPA ID No.** NYR000043521

1. **Generator Name** Lockheed Martin Corporation
   Address 1111 Marcus Avenue
   City Lake Success **State** NY **Country** USA **ZIP** 11042
   NAICS (SIC) Code _____ _____ _____ **Source** _____ **Origin** _____ **Form** _____ **System Type** _____
   Generator State No. _____ _____
   State Wastestream No. _____

2. **Waste Name** Soil — **Lab or Waste Area** _____
3. **Process Generating Waste** Metal & Debris from well maintenance & structural work.
4. **Shipping Name** NON HAZARDOUS ASPHALT - NON DOT REGULATED MATERIAL
   Hazard Class _____ **UN/NA No.** _____ **PG** ___ **RQ amt** _____ **lb**

RQ Additional Desc:	1.	2.
DOT Additional Desc:	1.	2.

5. **Waste Codes** _____ _____ _____ _____ _____ _____ _____ _____ _____ _____ _____ _____ _____ _____

Wastewater ☐ **Non Wastewater** ☒ **Sub Category** _____

6. **Physical and chemical properties** *(check all that apply)*

pH
- a ☐ < 2
- b ☐ 2 - 5
- c ☒ 5 - 9
- d ☐ 9 - 12.5
- e ☐ > 12.5

7.6 exact

Specific Gravity
- a ☐ < .8
- b ☐ .8 - 1.0
- c ☐ 1.0
- d ☐ 1.0 - 1.2
- e ☒ > 1.2

Solid exact

Flash Point (F)
- a ☐ < 80
- b ☐ 80 - 100
- c ☐ 101 - 140
- d ☐ 141 - 200
- e ☐ > 200
- f ☒ no flash _____ exact

Solids
- _____ % suspended
- 100 % settleable
- _____ % dissolved

Free Liquid Range 0 to 0%

- ___ % ash
- _____ water solubility
- _____ BTU/lb

Physical State
- s ☒ solid
- m ☐ semi-solid
- l ☐ liquid
- p ☐ pumpable semi-solid
- f ☐ flowable powder
- g ☐ gas
- a ☐ aerosol
- r ☐ pressurized liquid
- d ☐ debris per 40 CFR 268.45
- h ☐ sharps

Hazardous Characteristics
- a ☐ air reactive
- w ☐ water reactive
- c ☐ cyanide reactive
- f ☐ sulfide reactive
- e ☐ explosive
- o ☐ oxidizing acid
- p ☐ peroxide former
- r ☐ radioactive or NRC regulated
- s ☐ shock sensitive
- t ☐ temp sensitive
- m ☐ polymerization/monomer
- n ☐ OSHA carcinogen
- I ☐ infectious
- h ☐ inhalation hazard

Zone: _

Odor
- a none ☒
- b mild ☐
- c strong ☐

describe_____

Halogens
- Br N/A % Bromine
- Cl N/A % Chlorine
- F N/A % Fluorine
- I N/A % Iodine

Layers: a ☐ multilayered: b ☐ bi-layered: c ☒ single phase:

Viscosity by Layer:	Top Layer	Second Layer	Bottom Layer
	☐ high (syrup)	☐ high (syrup)	☐ high (syrup)
	☐ medium (oil)	☐ medium (oil)	☐ medium (oil)
	☐ low (water)	☐ low (water)	☐ low (water)
	☒ solid	☐ solid	☐ solid

Color
- Brown
- _____
- _____

Used oil y/n N **HOC <1000 ppm** ☒ **or > 1000 ppm** ☐

WIP No. _____

7. **Chemical Composition** [M = Marine Pollutant, S - Severe Marine Pollutant, O = Ozone Depleting Substance, U = Underlying Hazardous Constituent, B = Benzene NESHAP, T = TRI Chemical, C = OSHA Carcinogen]

	Constituents	Range	Units		Constituents	Range	Units
	Asphalt	100	100%				
			%				

Total Composition Must Equal or Exceed 100%

Other:

8. Is the wastestream being imported into the USA? Yes ☐ No ☒
9. Does the wastestream contain PCBs regulated by 40CFR? Yes ☐ No ☒
   Attach a completed PCB Certification Form
10. Is the wastestream subject to the Marine Pollutant Regulations? Yes ☐ No ☒
11. Is the wastestream subject to Benzene NESHAP? Yes ☐ No ☒
    If yes, is the wastestream subject to Notification and Control Requirements? Yes ☐ No ☒
    Benzene concentration _____ ppm
12. Is the wastestream subject to RCRA subpart CC controls? Yes ☐ No ☒
    Volatile organic concentration, if known _____ ppmw
    CC approved analytical method ☒ Generator Knowledge ☐
13. Is the wastestream from a CERCLA or state mandated cleanup? Yes ☒ No ☐

14. **Container Information** (*Identify UN container marking if known*)
    Packaging: Bulk Solid ☐ Type/Size: **Cubic Yard Box** **Bulk Liquid** ☐ Type/Size: _____ **Drum** ☐ Type/Size: _____
    Other _____
    Shipping Frequency: Units **1** Per Month ☐ Quarter ☐ Year ☐ One Time ☒ Other _____

15. **Additional Information:** _____

Is analytical or an MSDS available that describes the waste? Yes ☒ No ☐ If yes, please attach.

GENERATOR CERTIFICATION

I hereby certify that all information submitted in this and all attached documents contains true and accurate descriptions of this waste. Any sample submitted is representative as defined in 40 CFR 261 - Appendix I or by using an equivalent method. All relevant information regarding known or suspected hazards in the possession of the generator has been disclosed. I authorize sampling of any waste shipment for purposes of recertification.

Glenda B. Clark	817-378-2573	July 8, 2021
NAME (PRINT OR TYPE)	**PHONE**	**DATE**
Glenda B Clark	Project Lead	
SIGNATURE	**TITLE**	

FACILITY NOTIFICATION

If approved for management, Veolia ES has all the necessary permits and licenses for the waste that has been characterized and identified by this profile.

TSDF PROCESSING USE ONLY: PPE REQUIRED No _____ Yes _____ Describe _____

WIP No. _____

VEOLIA
ENVIRONMENTAL SERVICES

WASTESTREAM INFORMATION PROFILE

☐ Recertification

WIP Number _____

Originating Veolia ES Location: _____

☐ Invoice Address:

☐ Manifest from – blank if direct

Veolia ES TSDF requested _____ Technology requested _____ Generator No._____ **Generator EPA ID No. NYR000043521**

1. **Generator Name** Lockheed Martin Corporation **Generator State No.** _____ _____
   Address 1111 Marcus Avenue **State Wastestream No.**_____
   City Lake Success **State** NY **Country** USA **ZIP** 11042
   NAICS (SIC) Code _____ _____ _____ **Source** _____ **Origin** _____ **Form** _____ **System Type** _____

2. **Waste Name** Soil **Lab or Waste Area**_____
3. **Process Generating Waste** Soil from well maintenance & structural work.
4. **Shipping Name** NON HAZARDOUS SOIL - NON DOT REGULATED MATERIAL
   Hazard Class _____ **UN/NA No.**_____ **PG**___ **RQ amt**____**lb**

RQ Additional Desc:	1.	2.
DOT Additional Desc:	1.	2.

5. **Waste Codes** _____ _____ _____ _____ _____ _____ _____ _____ _____ _____ _____ _____ _____ _____

Wastewater ☐ **Non Wastewater** ☒ **Sub Category** _____

6. **Physical and chemical properties** *(check all that apply)*

pH
- a ☐ < 2
- b ☐ 2 - 5
- c ☒ 5 - 9
- d ☐ 9 - 12.5
- e ☐ > 12.5

7.6 exact

Specific Gravity
- a ☐ < .8
- b ☐ .8 - 1.0
- c ☐ 1.0
- d ☐ 1.0 - 1.2
- e ☒ > 1.2

Solid exact

Flash Point (F)
- a ☐ < 80
- b ☐ 80 - 100
- c ☐ 101 - 140
- d ☐ 141 - 200
- e ☐ > 200
- f ☒ no flash _____exact

Solids
- _____ % suspended
- 100 % settleable
- _____ % dissolved

Free Liquid Range 0 to 0%

- ___ % ash
- _____ water solubility
- _____ BTU/lb

Physical State
- s ☒ solid
- m ☐ semi-solid
- l ☐ liquid
- p ☐ pumpable semi-solid
- f ☐ flowable powder
- g ☐ gas
- a ☐ aerosol
- r ☐ pressurized liquid
- d ☐ debris per 40 CFR 268.45
- h ☐ sharps

Hazardous Characteristics
- a ☐ air reactive
- w ☐ water reactive
- c ☐ cyanide reactive
- f ☐ sulfide reactive
- e ☐ explosive
- o ☐ oxidizing acid
- p ☐ peroxide former
- r ☐ radioactive or NRC regulated
- s ☐ shock sensitive
- t ☐ temp sensitive
- m ☐ polymerization/monomer
- n ☐ OSHA carcinogen
- I ☐ infectious
- h ☐ inhalation hazard Zone: _

Odor
- a none ☒
- b mild ☐
- c strong ☐

describe_____

Halogens
- Br N/A % Bromine
- Cl N/A % Chlorine
- F N/A % Fluorine
- I N/A % Iodine

Layers: a ☐ **multilayered:** b ☐ **bi-layered:** c ☒ **single phase:**

Viscosity by Layer:	Top Layer	Second Layer	Bottom Layer
	☐ high (syrup)	☐ high (syrup)	☐ high (syrup)
	☐ medium (oil)	☐ medium (oil)	☐ medium (oil)
	☐ low (water)	☐ low (water)	☐ low (water)
	☒ solid	☐ solid	☐ solid

Color
- Brown
- _____
- _____

Used oil y/n N **HOC <1000 ppm** ☒ **or > 1000 ppm** ☐

WIP No. _____

7. **Chemical Composition** [M = Marine Pollutant, S - Severe Marine Pollutant, O = Ozone Depleting Substance, U = Underlying Hazardous Constituent, B = Benzene NESHAP, T = TRI Chemical, C = OSHA Carcinogen]

	Constituents	Range	Units		Constituents	Range	Units
	Soil	100	100%				
			%				

Total Composition Must Equal or Exceed 100%

Other:

8. Is the wastestream being imported into the USA? Yes ☐ No ☒
9. Does the wastestream contain PCBs regulated by 40CFR? Yes ☐ No ☒
   Attach a completed PCB Certification Form
10. Is the wastestream subject to the Marine Pollutant Regulations? Yes ☐ No ☒
11. Is the wastestream subject to Benzene NESHAP? Yes ☐ No ☒
    If yes, is the wastestream subject to Notification and Control Requirements? Yes ☐ No ☒
    Benzene concentration _____ ppm
12. Is the wastestream subject to RCRA subpart CC controls? Yes ☐ No ☒
    Volatile organic concentration, if known _____ ppmw
    CC approved analytical method ☒ Generator Knowledge ☐
13. Is the wastestream from a CERCLA or state mandated cleanup? Yes ☒ No ☐

14. **Container Information** (*Identify UN container marking if known*)
    Packaging: Bulk Solid ☐ Type/Size: _____ **Bulk Liquid** ☐ Type/Size: _____ **Drum** ☒ Type/Size: **55 gal**
    Other _____
    Shipping Frequency: Units **16** Per Month ☐ Quarter ☐ Year ☐ One Time ☒ Other _____

15. **Additional Information:** _____

Is analytical or an MSDS available that describes the waste? Yes ☒ No ☐ If yes, please attach.

GENERATOR CERTIFICATION

I hereby certify that all information submitted in this and all attached documents contains true and accurate descriptions of this waste. Any sample submitted is representative as defined in 40 CFR 261 - Appendix I or by using an equivalent method. All relevant information regarding known or suspected hazards in the possession of the generator has been disclosed. I authorize sampling of any waste shipment for purposes of recertification.

Glenda B. Clark	817-378-2573	June 22, 2021
NAME (PRINT OR TYPE)	**PHONE**	**DATE**
Glenda B Clark	Project Lead	
SIGNATURE	**TITLE**	

FACILITY NOTIFICATION

If approved for management, Veolia ES has all the necessary permits and licenses for the waste that has been characterized and identified by this profile.

TSDF PROCESSING USE ONLY: PPE REQUIRED No _____ Yes _____ Describe _____

WIP No. _____

NON-HAZARDOUS WASTE MANIFEST

1. Generator ID Number	2. Page 1 of	3. Emergency Response Phone	4. Waste Tracking Number
NYR000043521	1	(267) 406-0083	43217

GENERATOR

5. Generator's Name and Mailing Address

Lockheed Martin Corp.
1111 Marcus Avenue
Lake Success NY 11042

Generator's Phone: 917 328-2573

Generator's Site Address (if different than mailing address)

6. Transporter 1 Company Name: Innovative Recycling Technologies, Inc.

U.S. EPA ID Number: NYR000134940

7. Transporter 2 Company Name

U.S. EPA ID Number

8. Designated Facility Name and Site Address

Veolia ES Technical Solutions
1 Eden Lane
Flanders NJ 07836

Facility's Phone: 973 347-7111

U.S. EPA ID Number: NJD980536693

	9. Waste Shipping Name and Description	10. Containers No.	10. Containers Type	11. Total Quantity	12. Unit Wt./Vol.	
1.	Non Hazardous Soil Non-DOT Regulated Material	14	DM	7000	P	DW-15 drums
2.	Non Hazardous Soil Non-DOT Regulated Material	1	CF	500	P	metal & debris from well maintenance& structural work
3.	Non Hazardous Asphalt Non-DOT Regulated Material	1	CF	500	P	asphalt
4.						

13. Special Handling Instructions and Additional Information

9.1)WIP#1042849-55 Gal. Steel Drums
9.2)WIP#1042849-Cubic Yard Box
9.3)WIP#1044326-Cubic Yard Box

14. **GENERATOR'S/OFFEROR'S CERTIFICATION:** I hereby declare that the contents of this consignment are fully and accurately described above by the proper shipping name, and are classified, packaged, marked and labeled/placarded, and are in all respects in proper condition for transport according to applicable international and national governmental regulations.

Generator's/Offeror's Printed/Typed Name: MARSHALL GIBSON — Signature — Month: 7 — Day: 19 — Year: 21

INT'L

15. International Shipments ☐ Import to U.S. ☐ Export from U.S. Port of entry/exit:

Transporter Signature (for exports only): Date leaving U.S.:

TRANSPORTER

16. Transporter Acknowledgment of Receipt of Materials

Transporter 1 Printed/Typed Name: Francis McShane — Signature — Month: 7 — Day: 19 — Year: 21

Transporter 2 Printed/Typed Name — Signature — Month — Day — Year

DESIGNATED FACILITY

17. Discrepancy

17a. Discrepancy Indication Space ☐ Quantity ☐ Type ☐ Residue ☐ Partial Rejection ☐ Full Rejection

Manifest Reference Number:

17b. Alternate Facility (or Generator)

U.S. EPA ID Number

Facility's Phone:

17c. Signature of Alternate Facility (or Generator) — Month — Day — Year

18. Designated Facility Owner or Operator: Certification of receipt of materials covered by the manifest except as noted in Item 17a

Printed/Typed Name — Signature — Month — Day — Year: 7/20/21

169-BLC-O 6 10498 (Rev. 9/09)

COPY

STRAIGHT BILL OF LADING – SHORT FORM

NOTICE: Shippers of hazardous materials must enter 24-hour emergency response telephone number under "Emergency Response Phone Number.

Original—Not Negotiable

Date 5/26/21

Bill of Lading No.

Shipper No.

Carrier No.

IRT
(Name of Carrier)

TO: Consignee Arrow Scrap Corp	FROM: Shipper Lockheed Martin Corp
Street 83 Kent St	Street 1111 Marcus Ave
Destination West Babylon, NY Zip Code	Origin Lake Success, NY Zip Code 11042
Route: Vehicle No. SCAC	Emergency Response Phone Number

No. Shipping Units	+HM	Kind of Packaging, Description of Articles Special Marks and Exceptions (Commodities requiring special or additional care or attention in handling or stowing must be so marked and packaged as to ensure safe transportation with ordinary care. See Section 2(e) of National Motor Freight Classification, Item 360.)	Weight (Subject to Correction)*	Rate or Class	CHARGES
		Scrap metal for recycling			

*If the shipment moves between two ports by a carrier by water, the law requires that the bill of lading state whether weight is "carrier's or shipper's weight".

REMIT C.O.D. TO: ADDRESS

C.O.D. Amt. $

C.O.D. FEE: PREPAID ☐ COLLECT ☐ $

TOTAL CHARGES: $

Note–Where the rate is dependent on value, shippers are required to state specifically in writing the agreed or declared value of the property.

The agreed or declared value of the property is hereby specifically stated by the shipper to be not exceeding

$ _____ per _____

Subject to Section 7 of the conditions, if this shipment is to be delivered to the consignee without recourse on the consignor, the consignor shall sign the following statement.

The carrier shall not make delivery of this shipment without payment of freight and all other charges.

DKP As Agent for Lockheed Martin Corp.
(Signature of Consignor)

FREIGHT CHARGES
Check Appropriate Box:
☐ Freight prepaid
☐ Collect

RECEIVED, subject to the classifications and lawfully filed tariffs in effect on the date of the issue of this Bill of Lading, the property described above in apparent good order, except as noted (contents and condition of contents of packages unknown), marked, consigned, and destined as indicated above which said carrier (the word carrier being understood throughout this contract as meaning any person or corporation in possession of the property under the contract) agrees to carry to its usual place of delivery at said destination, if on its route, otherwise to deliver to another carrier on the route to said destination. It is mutually agreed as to each carrier of all or any of, said property over all or any portion of said route to destination and as to each party at any time interested in all or any of said property, that every service to be performed hereunder shall be subject to all the terms and conditions of the Uniform Domestic Straight Bill of Lading set forth (1) in Uniform Freight Classifications in effect on the date hereof, if this is a rail or a rail-water shipment or (2) in the applicable motor carrier classification or tariff, if this is a motor carrier shipment. Shipper hereby certifies that he is familiar with all the terms and conditions of the said bill of lading, set forth in the classification or tariff which governs the transportation of this shipment, and the said terms and conditions are hereby agreed to by the shipper and accepted for himself and his assigns.

Mark with "RQ" if appropriate to designate Hazardous Materials as defined in the U.S. Department of Transportation Regulations governing the transportation of hazardous materials. The use of this column is an optional method for identifying hazardous materials on Bills of Lading per 172.201(a)(1) (iii) of Title 49 Code of Federal Regulations. Also when shipping hazardous materials, the shipper's certification statement prescribed in section 172.204(a) of the Federal Regulations, as indicated on the Bill of Lading does apply, unless a specific exception from the requirement is provided in the Regulation for a particular material.

The format and content of hazardous item list is the responsibility of individual company interpretation of requirements as described in 49 Code of Federal Regulations 172, Subpart C-Shipping Papers. Such description consists of the following per Sections 172.201 (Hazardous Material Table) and Sections 172.202 and 172.203: Proper shipping name, hazardous class, UN identification number, packing group, and subsidiary class(es).

Note: Liability limitation for loss or damage in this shipment may be applicable. See 49 United States Code, Sections 14706(c (1)(A) and (B).

SHIPPER	CARRIER
PER	PER

This is to certify that the above named materials are properly classified, packaged, marked, and labeled, and are in proper condition for transportation according to the applicable regulations of the U.S. Department of Transportation.

Carrier acknowledges receipt of packages and any required placards. Carrier certifies emergency response information was made available and/or carrier has the U.S. Department of Transportation emergency response guidebook or equivalent documentation in the vehicle. Property described above is received in good order, except as noted.

** Scale Ticket **

ARROW
METAL & E-WASTE RECYCL

83 Kean Street
West Babylon, NY 11704
Phone : 631.491.3061
Fax : arrowscrap.com

Ticket # : 00251803 Date : 26 May 2021
Supplier : EWE001 - EWEN, JOHN T JR
3161 CHERRYWOOD DR
WANTAGH, NY
11793
Vehicle : BOX TRUCK ORANGE
Time In : 10:40 am Out : 10:58 am
Served by: arrow Scale: 2

Gross	Tare	Net Wt	Ext
TIN/LIGHT IRON			$120.00
Price :	.06 per LBS		
12,480	10,480	2,000 LBS	
TOTAL ---> Net ---			$120.00

Number Of Items : 1

From: Jack Ewen
Sent: Monday, July 12, 2021 10:19 AM
To: Decker, Mike <mike.decker@veolia.com>
Cc: Johnson, Kevin <kevin.johnson@veolia.com>; Jean Dull <jeandull@irtwaste.com>; Joy Jefferson <jjefferson@irtwaste.com>; Elizabeth Hughes <ehughes@irtwaste.com>; John Dull <jdull@irtwaste.com>
Subject: RE: Lockheed Martin Profile for Approval

Hi Mike

Thanks for getting back to us so quickly on this. I am okay with both of those

Jack Ewen
Innovative Recycling Technologies, Inc.
C: 516.816.4375

-------- Original message --------
From: "Decker, Mike" <mike.decker@veolia.com>
Date: 7/12/21 10:16 AM (GMT-05:00)
To: Jack Ewen <Jackewen@irtwaste.com>
Cc: "Johnson, Kevin" <kevin.johnson@veolia.com>, Jean Dull <jeandull@irtwaste.com>, Joy Jefferson <jjefferson@irtwaste.com>, Elizabeth Hughes <ehughes@irtwaste.com>, John Dull <jdull@irtwaste.com>
Subject: Re: Lockheed Martin Profile for Approval

Good morning Jack,

With the metals all falling under regulatory limits why don't we just use the soil wip that's already on file? And the asphalt profile is it ok if I make some changes to it? Such as the waste name from soil to asphalt? And process generating waste to asphalt from well drilling?

Mike Decker
Project Lead
Veolia North America
Industrial Business
1 Eden Lane
Flanders, NJ 07836
Tel 973.691.3997
Cell 973.769.8417
Fax 973.691.3943
mike.decker@veolia.com
www.veolianorthamerica.com



Goal Zero. Leading Safety Together.

This e-mail message from Veolia is for the sole use of the intended recipient(s) and may contain confidential and privileged information. Any unauthorized review, use, disclosure or distribution is prohibited. If you are not the intended recipient, please communicate with the sender by reply e-mail and destroy all copies of the original message and delete same from all computers.

On Fri, Jul 9, 2021 at 4:29 PM Jack Ewen <Jackewen@irtwaste.com> wrote:

Good Afternoon Mike, Kevin,

Attached please find profiles and analysis for approval. This material is a result of the same process as the approved wip 001042849 that was approved last week.

Please feel free to reach out with any questions.

Thanks
Jack

Jack Ewen
Innovative Recycling Technologies, Inc.
690 North Queens Avenue
Lindenhurst, NY 11757
O: 631.225.3044
F: 631.225.3056
C: 516.816.4375