Lockheed Martin Corporation
6801 Rockledge Drive MP: CCT-246
Bethesda, MD 20817
Telephone (301) 548-2227

October 30, 2017 **VIA PRIVATE CARRIER**

Mr. James R. Carroll
Program Administrator
Land Restoration Program
Land Management Administration
Maryland Department of the Environment
1800 Washington Boulevard, Suite 625
Baltimore, Maryland 21230

Subject: Transmittal of the Construction Report Sub-Slab Depressurization System
Third-Phase Expansion – Building A
Lockheed Martin Corporation; Middle River Complex
2323 Eastern Boulevard, Middle River, Baltimore County, Maryland

Dear Mr. Carroll:

For your information please find enclosed two hard copies with a CD of the above-referenced document. This document summarizes the third-phase expansion of the sub-slab depressurization system operating in Building A of the Middle River Complex in Middle River, Maryland.

Please let me know if you have any questions. My office phone is (301) 548-2227.

Sincerely,

Lynnette Drake
Remediation Analyst, Environmental Remediation

cc: (via email without enclosure)
Gary Schold, MDE
Mark Mank, MDE
Christine Kline, Lockheed Martin
Norman Varney, Lockheed Martin
Tom Blackman, Lockheed Martin
Dave Brown, MRAS
Michael Martin, Tetra Tech
Cannon Silver, CDM Smith

cc: (via mail with CD enclosure)
Jann Richardson, Lockheed Martin

cc: (via RMFT)
Justin Tetlow, MRAS
Scott Heinlein, LMCPI
Christopher Keller, LMCPI

cc: (via mail with enclosure)
Tom Green, LMCPI
Mike Musheno, LMCPI

Construction Report
Sub-Slab Depressurization System
Third-Phase Expansion – Building A
Lockheed Martin Middle River Complex
2323 Eastern Boulevard
Middle River, Maryland

Prepared for:

Lockheed Martin Corporation

Prepared by:

Tetra Tech, Inc.

October 2017

Michael Martin, P.G.
Regional Manager

Peter A. Rich, P.E.
Principal Engineer

This page intentionally left blank.

TABLE OF CONTENTS

Section **Page**

ACRONYMS iii

1 INTRODUCTION 1-1

2 SYSTEM EXPANSION 2-1

2.1 EXPANSION TASKS 2-1

2.2 SUB-SLAB VAPOR SAMPLING 2-3

2.3 WASTE MANAGEMENT 2-4

3 REFERENCES 3-1

APPENDICES

APPENDIX A—SUMMARY OF CONSTRUCTION ACTIVITIES

APPENDIX B—AS-BUILT DRAWINGS

G-1— As-Built Plan Overview, SSD System Third-Phase Expansion – Building A

G-2—As-Built Piping Layout and Details, SSD System Third-Phase Expansion – Building A

G-3—As-Built Process and Instrumentation Diagram, SSD System Third-Phase Expansion – Building A

APPENDIX C—CONSTRUCTION LOG FOR NEW EXTRACTION POINT (SSD-39-A)

APPENDIX D—GEOPHYSICAL UTILITY-INVESTIGATION REPORT

APPENDIX E—ANALYTICAL REPORTS

Basement Sump HRS-5 Extraction Vapor Samples (July 6, 2017)

SSD System Samples (July 6, 2017)

Waste Soil, Concrete Core, and Water Samples (June 28, 2017)

TABLE OF CONTENTS (continued)

LIST OF FIGURES

Page

Figure 1 Building A SSD System Layout 1-3

LIST OF TABLES

Page

Table 1 Summary of Analytical Detections in Basement Sump HRS-5 Extraction Vapor Samples – July 6, 2017 2-5

Table 2 Summary of Analytical Detections in Sub-Slab Depressurization System Samples – July 6, 2017 2-6

ACRONYMS

$\mu g/m^3$	micrograms per cubic meter
cfm	cubic feet per minute
GAC	granular-activated carbon
ND	not detected
MRAS	MRA Systems, Inc.
PVC	polyvinyl chloride
SSDS	sub-slab depressurization system
TestAmerica	TestAmerica, Inc.
Tetra Tech	Tetra Tech, Inc.
TO-15	Toxic Organic Method-15
USEPA	United States Environmental Protection Agency
VMP	vapor monitoring point
VOC(s)	volatile organic compound

This page intentionally left blank.

Section 1
Introduction

Tetra Tech, Inc. (Tetra Tech) has prepared this report to document the third-phase expansion of the sub-slab depressurization (SSD) system operating in Building A of the Middle River Complex in Middle River, Maryland (Figure 1). The system was expanded to address areas along the western side of Building A (near vapor monitoring point [VMP] 168-A) and the basement sump HRS-5 near column D26 as shown on Figure 1. Elevated concentrations of volatile organic compounds (VOCs) were detected in the sub-slab vapor in these areas in 2016-2017. The objective of the expanded system is to maintain a negative pressure of 0.01-inches water column in the sub-slab target area to prevent potential vapor migration to indoor air.

The third-phase expansion included (see Figure 1):

- installing one vertical extraction point and one vapor monitoring point
- installing of a second moisture separator
- improving granular-activated carbon (GAC) pipe and hose connections
- extending the sub-slab depressurization system header to the southern area of the Building A basement
- installing a vacuum seal and hose connection in sump HRS-5 in the Building A basement so that vapor from the sump in the former heater room A-9

The work was performed in June-July 2017 in accordance with the approved *100% Design Sub-Slab Depressurization System Third-Phase Expansion—Building A* (Tetra Tech, 2017a). Section 2 details the activities completed as part of the third-phase expansion, including sampling and analyses of sub-slab vapor samples and waste management. Section 3 lists the references used in this report.

The latest version of the Building A SSD system operation, maintenance and monitoring manual will be updated to include the new extraction and vapor monitoring points, new moisture separator,

and associated equipment manufacturer manuals and operation and maintenance procedures. The updated manual will be provided separately in the third quarter of 2017.

P:\ACAD\0512-124-MRIV\0512124075A.DWG

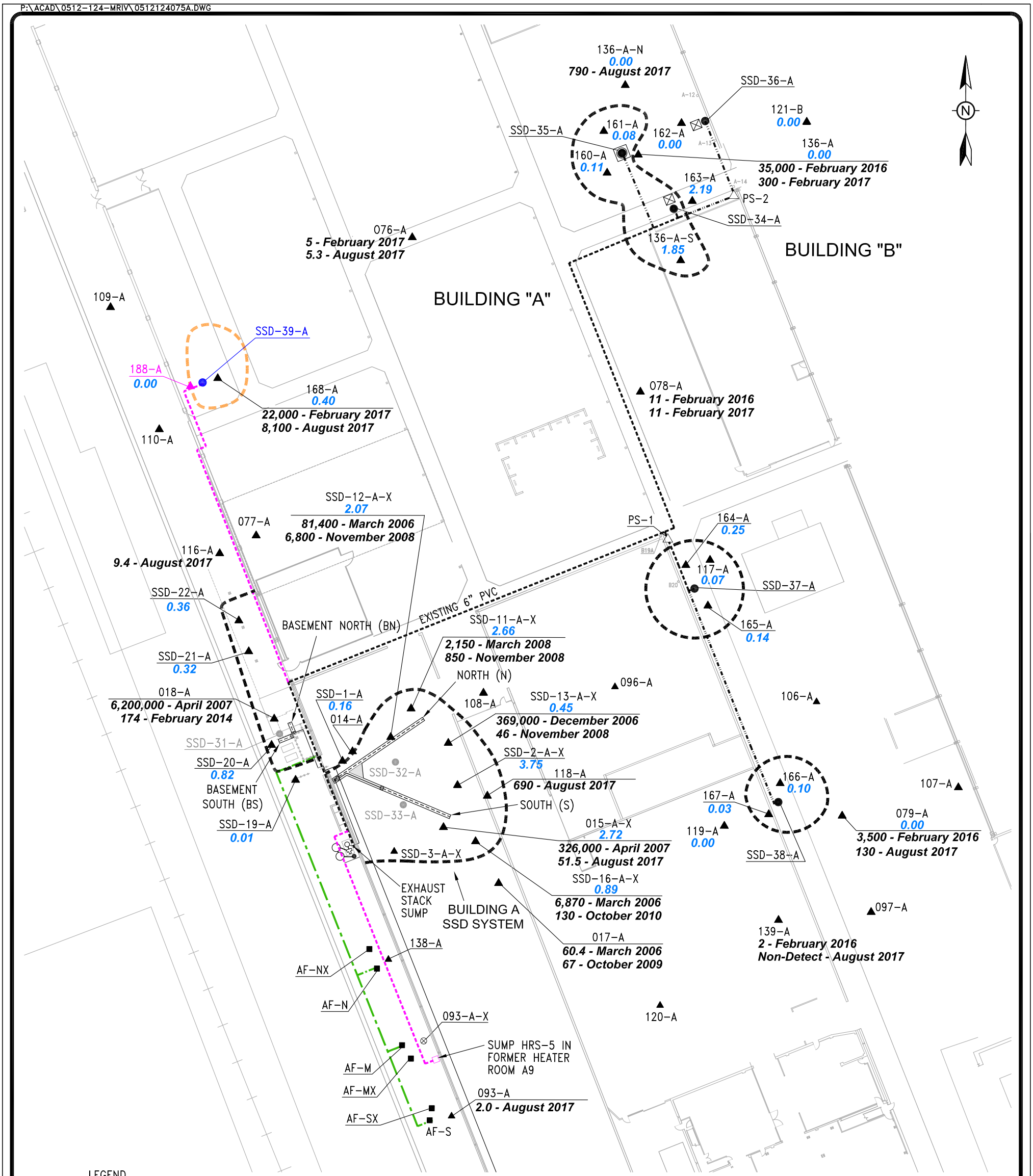

LEGEND

- ▲ SUB-SLAB VAPOR MONITORING POINT
- ● VERTICAL SUB-SLAB VAPOR EXTRACTION POINT
- ● NEW VERTICAL SUB-SLAB VAPOR EXTRACTION POINT
- ● SUB-SLAB VAPOR EXTRACTION POINT (USED IN PREVIOUS PILOT TEST)
- ⊗ INDOOR AIR SAMPLING POINT
- ▲ NEW SUB-SLAB VAPOR MONITORING POINT
- SSD SUB-SLAB DEPRESSURIZATION
- NEW 4" DIA. PVC HEADER
- INDOOR AIR FILTER CONNECTION TO EMERGENCY POWER SUPPLY (FIELD RUN)
- TARGET INFLUENCE AREA FOR SSD SYSTEM EXPANSION
- APPROXIMATE EXISTING INFLUENCE AREA
- ■ INDOOR AIR FILTER
- SSD SYSTEM BLOWER SKID
- EXISTING SUB-SLAB VAPOR EXTRACTION LATERAL
- △ PIPE SUMP
- STEEL PIPE SLEEVE (4" DIA.)
- PIPE BOLLARD (2" DIA.)
- **3,500** HIGHEST SUB-SLAB TCE CONCENTRATION ($\mu g/m^3$) PRE-SSD SYSTEM AND MOST RECENT CONCENTRATION POST-SSD SYSTEM OPERATION
- **2.72** INCHES OF H_2O INDUCED VACUUM MEASURED ON 6/26/2017

NOTE:

PIPE HANGERS PLACED NEXT TO EXISTING SUPPORT BRACKETS FOR STEEL PIPING IN CEILING APPROX. 6-12 FT APART.

0 50 100

SCALE IN FEET

TITLE: **BUILDING A SSD SYSTEM LAYOUT**

LOCATION: **LMC Middle River Complex Middle River, Maryland**

TETRA TECH

APPROVED	PR	FIGURE
DRAFTED	CP	1
PROJECT#	117-0512124	
DATE	10-30-17	

Section 2
System Expansion

2.1 EXPANSION TASKS

The third-phase expansion activities of the sub-slab depressurization (SSD) system operating in Building A involved the following tasks:

- reviewing and gaining approval of the proposed extraction point SSD-39-A location with the facility tenant, MRA Systems, Inc. (MRAS) on April 17, 2017
- clearing extraction and monitoring point positions for utilities via geophysical survey on June 8, 2017
- mobilizing subcontractor(s) and equipment for extraction point installation on June 5, 2017, and for remaining tasks on July 5, 2017
- installing four-inch diameter Schedule 40 polyvinyl chloride (PVC) overhead pipe to connect the new extraction point SSD-39-A to the Building A SSD system on June 6 to June 15, 2017
- installing extraction piping with three hose connections for connection to HRS-5 and other to-be-determined sumps or extraction points in the basement on June 7, 2017
- installing water knockout sumps between granular activated-carbon (GAC) units on June 19, 2017
- installing a second moisture separator (with heat trace and associated appurtenances) on the outlet side of the SSD system blower on June 19, 2017
- installing extraction point SSD-39-A using a concrete core drill on June 20, 2017
- installing vapor monitoring point 188-A[1], 12 feet west of extraction point SSD-39-A and leading towards the loading dock and performing a helium leak test (no leaks were detected)

[1] The 100% design indicated that the new VMP would be designated 169-A; however, that notation was already in use before the system expansion was constructed, so 188-A was used instead.

- storing wastes (concrete cores, soil, and water) generated during the installation of extraction point SSD-39-A in 55-gallon drums staged in the SSD system waste-drum staging area in Building C

- vacuum testing of the newly installed PVC pipe on June 21, 2017

- re-starting the SSD system with new extraction point SSDS-39-A online on June 21, 2017

- installing a vacuum seal with 40 mil plastic sheeting sealed to the floor by StegoTack® double sided tape, underlain by plywood supporting a fitted 4-inch diameter bulkhead, and 4-inch diameter hose connection on basement sump HRS-5 in the former heater room A-9 of the Building A basement on July 5, 2017

- using a smoke detector aerosol tester to evaluate the integrity of the vacuum seal installed on basement sump HRS-5 (no leaks were detected)

- inspecting alarm switches and the auto-dialer connection on the new moisture separator on July 6, 2017

- testing the SSD system extraction well flow-vacuum relationship and balancing the extraction wells on July 6, 2017

- improving pipe and hose connections on the GAC units on the SSD system effluent by adding four-inch diameter PVC pipe

- collecting air samples from basement extraction connection to the sealed HRS-5 sump on July 6, 2017

- starting continuous vapor extraction from basement sump HRS-5 by the SSD system on July 6, 2017, after the sample collection conference call on July 6, 2017, per agreement with Lockheed Martin.

Details for the system expansion tasks listed above are in Appendix A; field notes are available upon request. The extraction point, vapor monitoring point, overhead pipe, moisture separator, and GAC pipe were installed in accordance with the approved *100% Design Sub-Slab Depressurization System Third-Phase Expansion—Building A* (Tetra Tech, 2017a) (i.e., "100% Design"). Tetra Tech provided on-site inspections during construction to ensure that the work complied with the 100% design.

The vacuum seal on basement sump HRS-5 was a field change from the 100% design; it was installed to allow extraction of vapor from the sump. The seal and hose connection are described in Appendix A. Two other minor changes from the proposed building sump seal were made in the field during the expansion construction:

* A Kindorf® frame was anchored to the floor, and the basement sump-extraction point piping was then anchored to the Kindorf®to support the weight of the hose connection points and valves, because the basement sump-extraction piping does not run up a wall or column.

* The two-inch-diameter clear flexible-hose connections at the basement sump were changed to four-inch-hose cam-lock connections and Schedule 40 PVC piping to allow hose connections of greater length and flow.

As-built drawings, the construction log for the new extraction-point, the utility clearance report, and the laboratory results for the collected air samples are in Appendices B through E, respectively.

2.2 SUB-SLAB VAPOR SAMPLING

Grab vapor samples were collected from basement sump HRS-5 immediately after the start of extraction testing on July 6, 2017; samples designed BSMT-25 were collected at flow rates of 25 cubic feet per minute (cfm) and samples designated BSMT-50 were collected at flow rates of 50 cfm. The 25-cfm test started at 10:50, and the BSMT-25 START sample was taken at 10:55; the BSMT-25 END sample was taken at 12:00. The 50-cfm test was started immediately after the 25-cfm test ended; the BSMT-50 START sample was taken at 12:10, and the BSMT-50 END sample was taken at 13:00. Influent, effluent, and mid-granular activated-carbon (GAC) grab samples were collected from the expanded SSD system on July 6, 2017, approximately two weeks after the addition of SSDS-39-A, and two hours after the HRS-5 extraction.

All samples were collected directly from each sampling port by connecting a one-liter Summa® canister to the sampling port using a piece of Teflon® tubing, and opening the canister valve until the canister gauge reached zero or stropped falling (approximately one minute). All samples were and shipped to TestAmerica, Inc. (TestAmerica) in Knoxville, Tennessee for VOC analysis by United States Environmental Protection Agency (USEPA) Method TO-15. The results of the sub-slab vapor samples are summarized in the Table 1 and the results of the system samples are summarized in Table 2. The analytical reports are in Appendix E.

Total VOCs in system influent increased after inclusion of basement sump HRS-5 and SSD-39-A, from 1,364 micrograms per cubic meter air ($\mu g/m^3$) on June 5, 2017, to 2,121 $\mu g/m^3$ on July 6, 2017.

Since startup, the expanded system has been inspected and monitored bi-weekly. Induced-vacuum influence is present in the target zone, at one (VMP 168-A) of the two VMPs near SSD-39-A. Further monitoring and extraction adjustments will be made to improve vacuum influence in the third quarter

of 2017. Figure 1 shows the vacuum influence observed on June 27, 2017, following startup of the expanded system.

2.3 WASTE MANAGEMENT

The waste generated from the expansion consisted of approximately one-fourth drum of soil and concrete cores; one-third drum of water was generated from the installation of the extraction point. The soil/concrete and water drums were sampled for waste characterization on June 28, 2017; the laboratory analytical report is in Appendix D. The disposal of these waste drums is currently being coordinated with Clean Harbors; they will be shipped off-site for disposal before September 3, 2017 (no more than 75-days after generation).

Table 1

Summary of Analytical Detections in Basement Sump HRS-5 Extraction Vapor Samples – July 6, 2017 Sub-Slab Depressurization System Third-Phase Expansion Building A, Middle River Complex, Middle River, Maryland

Constituent	Concentration (µg/m³)			
	BSMT-25 START (10:55)	BSMT-25 END (12:00)	BSMT-50 START (12:10)	BSMT-50 END (13:00)
Chlorodifluoromethane	ND	ND	ND	8.9
cis-1,2-Dichloroethene	970	140	120	73
1,1-Dichloroethane	180	32	24	13
1,1-Dichloroethene	5,500	530	400	200
trans-1,2-Dichloroethene	ND	28	22	12
1,1,1-Trichlorethane	ND	ND	ND	7.9
Trichloroethene	52,000	7,300	6,500	4,900
Total VOCs	58,650	8,030	7,066	5,215

All concentrations are in micrograms per cubic meter air (µg/m³)
BSMT-25 and BSMT-50 – vapor samples collected at 25 and 50 cubic feet per minute, respectively.
ND— not detected
VOCs— volatile organic compounds

Table 2

Summary of Analytical Detections in Sub-Slab Depressurization System Samples – July 6, 2017 Building A, Middle River Complex, Middle River, Maryland

Sample	Influent Concentration (µg/m^3)	Mid-GAC Concentration (µg/m^3)	Effluent Concentration (µg/m^3)
Benzene	25	ND	0.44
Chlorodifluoromethane	7.2	3.8	3.5
Chloroform	ND	1.1	1.2
cis-1,2-Dichloroethene	94	67	96
Dichlorodifluoromethane	ND	2.4	2.3
1,1-Dichloroethane	20	10	14
1,1-Dichloroethene	120	76	78
Ethylbenzene	ND	1.1	1.3
Methylene Chloride	ND	3.3	3.7
Toluene	ND	4.8	5.3
trans-1,2-Dichloroethene	4.6	1.3	ND
Tetrachloroethene	ND	ND	0.79
trans 1-2 Dichloroethane	ND	ND	1.9
1,1,1-Trichloroethane	450	57	180
Trichloroethene	1400	0.95	150
Vinyl chloride	ND	ND	0.89
Xylenes	ND	3.4	4.1
Total VOCs	**2121**	**232**	**543**

All concentrations are in micrograms per cubic meter air (µg/m^3).
GAC— granular activated-carbon
ND— not detected
VOCs— volatile organic compounds

Section 3
References

1. TestAmerica, Inc. (TestAmerica), 2017. *Analytical Report, TestAmerica Project No. 140-8631-1*. July 17.

2. TestAmerica, Inc. (TestAmerica), 2017. *Analytical Report, TestAmerica Project No. 140-8632-1*. July 17.

3. TestAmerica, Inc. (TestAmerica), 2017. *Analytical Report, TestAmerica Project No. 240-81698-1*. July 17.

4. Tetra Tech, Inc. (Tetra Tech), 2016. *Operation, Maintenance, and Monitoring Manual, Sub-Slab Depressurization System—Building A*. Prepared by Tetra Tech, Inc., Germantown, Maryland for Lockheed Martin Corporation, Bethesda, Maryland. July.

5. Tetra Tech, Inc. (Tetra Tech), 2017a. *100% Design Sub-Slab Depressurization System Third-Phase Expansion—Building A*. Prepared by Tetra Tech, Inc., Germantown, Maryland for Lockheed Martin Corporation, Bethesda, Maryland. May.

This page intentionally left blank.

APPENDIX A—SUMMARY OF CONSTRUCTION ACTIVITIES

APPENDIX A

Summary of Construction Activities
Building A Sub-Slab Depressurization System (SSDS) Third-Phase Expansion
Middle River Complex, Middle River, Maryland

Date	Building A sub-slab depressurization system expansion activity
April 17, 2017	• Site walk with Bob Kuhn with Middle River Aircraft Systems (MRAS) and Tony Apanavage, Peter Rich, and Michael Wilks with Tetra Tech to discuss the third-phase expansion of the Building A sub-slab depressurization system (SSDS).
June 2, 2017	• Met with Bob Kuhn to further discuss proposed monitoring point location, staging location, and pipe routing.
June 5, 2017	• Mobilized subcontractors and met with Scott Lapp for site-specific health and safety training. Received delivery of various supplies and equipment for pipe installation. Harrington Plastics delivered 500 feet of four-inch-diameter Schedule 40 polyvinyl chloride (PVC) pipe, 60 feet of two-inch-diameter Schedule 40 PVC pipe, and several boxes of fittings and valves.
June 6, 2017	• Started overhead pipe installation in basement of Building A (to extend the SSDS header to the southern area of the Building A basement). Pipe (95 feet of four-inch-diameter Schedule 40 PVC pipe) was installed along existing Kindorf® and braced to wall where needed from column D20 to D23 in the south area of the basement towards basement sump HRS-5.
June 7, 2017	• Submitted Miss Utility ticket in preparation for concrete core drilling for the new extraction point (SSD-39-A) in Building A. • Installed water knockout drain using two feet of two-inch-diameter Schedule 40 PVC pipe with a ball valve drain in newly installed (June 6 2017) overhead piping near column D25. • Installed three four–inch-diameter ball valves, four-inch-diameter hose cam-lock connections, and Kindorf® steel supports on the HRS-5 sump extraction point. • Installed 50 feet of four-inch-diameter Schedule 40 PVC overhead pipe in the basement from column D23 to D25.
June 8, 2017	• Cleaned the Building A skid and carbon storage area. • Submitted dig/excavation permit to Scott Lapp. • Connected the newly installed overhead PVC pipe in the basement to the SSDS (total of 160 feet of four-inch-diameter Schedule 40 PVC pipe installed in basement from column D20 to D26). • Enviroscan cleared proposed locations for extraction point SSD-39-A and vapor monitoring point (VMP) 188-A (along with proposed locations for VMPs 162-A and 11-A for a separate project).

APPENDIX A

Summary of Construction Activities
Building A Sub-Slab Depressurization System (SSDS) Third-Phase Expansion
Middle River Complex, Middle River, Maryland

Date	Building A sub-slab depressurization system expansion activity
June 9, 2017	• Transferred spare 400-pound granular activated-carbon (GAC) drum from Building A skid to Building C skid. • Received delivery of two skyjack manlifts by United Rentals. • Installed 46 feet of two-inch-diameter Schedule 40 PVC pipe overhead next to proposed location for new extraction point SSD-39-A near column D12. • Marked prospective drill points with spray paint.
June 12, 2017	• Raised a section of the existing six-inch-diameter header pipe (approximately 10 feet) at the Building A loading dock access door near column D20 to above new ceiling height (from approximately 12 to 15 feet high) per Bob Kuhn's request. A small window was knocked out above the access door to accommodate the pipe and was later fitted with foam and particle-board seal. • Hammer-drilled through wall near Building A electrical room to install four-inch-diameter Schedule 40 PVC pipe. • Installed 28 feet of four-inch-diameter Schedule 40 PVC pipe toward SSD-39-A between columns D14 and D12 on the loading dock's northwest side. • Received moisture separator delivery from Gasho.
June 13, 2017	• Installed knockout sump near SSD-39-A with double drain valves and lagged to wall. • Connected four-inch-diameter Schedule 40 PVC piping in new crane room to the two-inch-diameter Schedule 40 PVC pipe riser pipe from new extraction point SSD-39-A. • Installed pipe hangers from the I-beam on Building A loading dock toward the Building A SSD equipment skid (located in the Building A loading dock area).
June 15, 2017	• Installed 160 feet four-inch-diameter Schedule 40 PVC pipe from column D19A to D14 and tied the new extraction point SSD-39-A piping into system.
June 19, 2017	• Installed new moisture separator on the outlet side of the SSDS blower (SSDS's second moisture separator) using two-inch-diameter Schedule 40 PVC pipe.

APPENDIX A

Summary of Construction Activities
Building A Sub-Slab Depressurization System (SSDS) Third-Phase Expansion
Middle River Complex, Middle River, Maryland

Date	Building A sub-slab depressurization system expansion activity
	• Fabricated four-foot-tall vertical water-knockout drain stacks using four-inch-diameter Schedule 40 PVC pipe with four-inch-diameter hose connectors and ball valve drains. These stacks are currently not in use; they will be connected in the winter to the piping effluent of the first GAC drum in each of the two GAC treatment trains to collect condensate remaining in the vapor before the vapor enters the second set of GAC drums.
June 20, 2017	• Replaced all existing hoses connected to the SSDS GAC drums with new clear flexible hose (same diameter – four inches). • Core-drilled and hand-augered new extraction point SSD-39-A. The point was installed to total depth of 19.5 inches with 10.5 inches of screened interval. Removed approximately 11 inches of soil and 9 inches of concrete slab flooring (two 8-inch-diameter cores: one six inches in thickness and a second core 3 inches in thickness drilled underneath) and placed in dedicated 55-gallon drum. The lubrication water used for the concrete core drill was cleared with a shop vacuum and was placed in a dedicated wastewater drum. These waste drums were transferred to the SSDS waste drum storage area in Building C. • Installed VMP 188-A (as well as VMP 11-A and 162-A) using Cox-Colvin & Associates, Inc.'s stainless steel Vapor Pin™.
June 21, 2017	• Placed two steel bollards around new extraction point SSD-39-A. • Patched concrete where core drill was lagged to floor. • Installed two–inch-diameter gate valve to SSD-39-A, re-started system, and SSD-39-A opened to 50%; initial reading was 800 feet per minute at 21 inches of water. • Performed helium seal tests at all new VMPs; no leaks were detected. • Manlifts picked up by United Rentals.
June 27, 2017	• Conducted system check (one week post-startup). System check included measuring and recording the vacuum and flow at each vapor extraction point/lateral, vacuum influence at each VMP, blower-skid gauge readings, and condensate accumulation.
June 28, 2017	• Collected and submitted waste samples (soil, concrete, and water) to TestAmerica Laboratories, Inc. (TestAmerica) for waste characterization.

APPENDIX A

Summary of Construction Activities
Building A Sub-Slab Depressurization System (SSDS) Third-Phase Expansion
Middle River Complex, Middle River, Maryland

Date	Building A sub-slab depressurization system expansion activity
July 5. 2017	• The entry to the HRS-5 sump near column D26 in the south area of the Building A basement was cleaned with water and Simple Green in preparation for the sump vapor extraction pilot test. The sump was then sealed with plywood overlain by 40 mil plastic sheeting, StegoTak double-sided tape, pea gravel, and Great Stuff foam sealer. A four-inch-diameter bulkhead with four–inch-diameter hose fittings were then installed into the seal through the plastic and plywood.
July 6, 2017	• The sump-extraction pilot test was conducted over the span of two hours and four vapor samples were taken at the start and end of the 25 standard cubic feet per minute (scfm) and 50 scfm portions of the test. • The second moisture separator was wired into the SSDS and the alarm was tested with no issues. • The hoses connecting the SSDS GAC drums were cut down to minimize the amount of hose (the vertical knockout stacks fabricated on June 19, 2017 are on standby for use in the winter). • Conducted vapor extraction from basement sump HRS-5 extraction point at 25 scfm. Took vacuum and flow readings were taken at several sub-slab vapor extraction wells (SSD-37-A, SSD-37-A, North, South, Basement North, Basement South). • After pilot testing, basement sump HRS-5 extraction point was left in operation at 25 standard cubic feet per minute.
July 12 2017	• Conducted system check (three weeks post-startup). System check included measuring and recording the vacuum and flow at each vapor extraction point/lateral, vacuum influence at each VMP, blower-skid gauge readings, and condensate accumulation.

APPENDIX B— AS-BUILT DRAWINGS

G-1— AS-BUILT PLAN OVERVIEW, SSD SYSTEM THIRD-PHASE EXPANSION – BUILDING A

G-2— AS-BUILT PIPING LAYOUT AND DETAILS, SSD SYSTEM THIRD-PHASE EXPANSION – BUILDING A

G-3— AS-BUILT PROCESS AND INSTRUMENTATION DIAGRAM, SSD SYSTEM THIRD-PHASE EXPANSION – BUILDING A

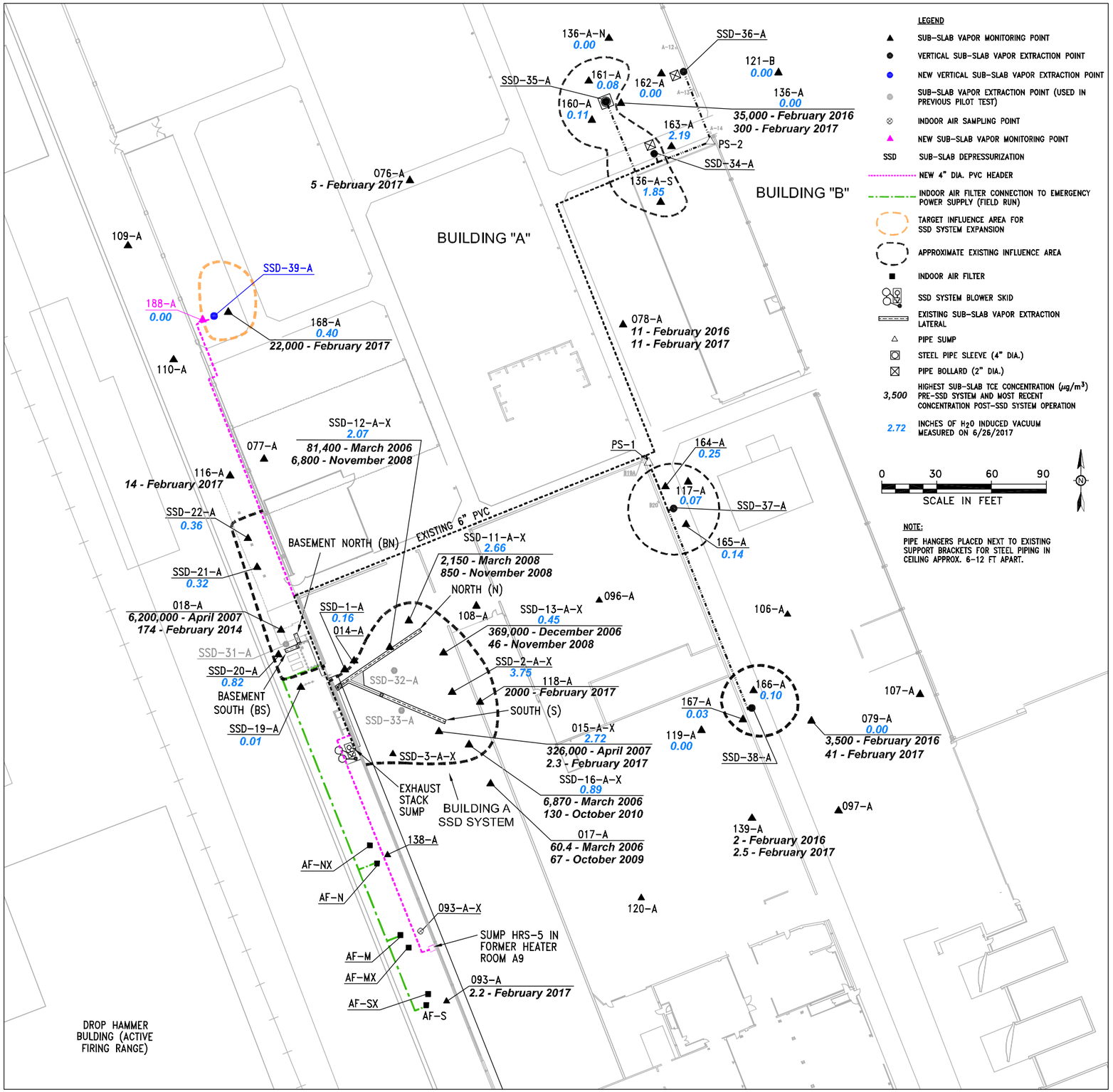

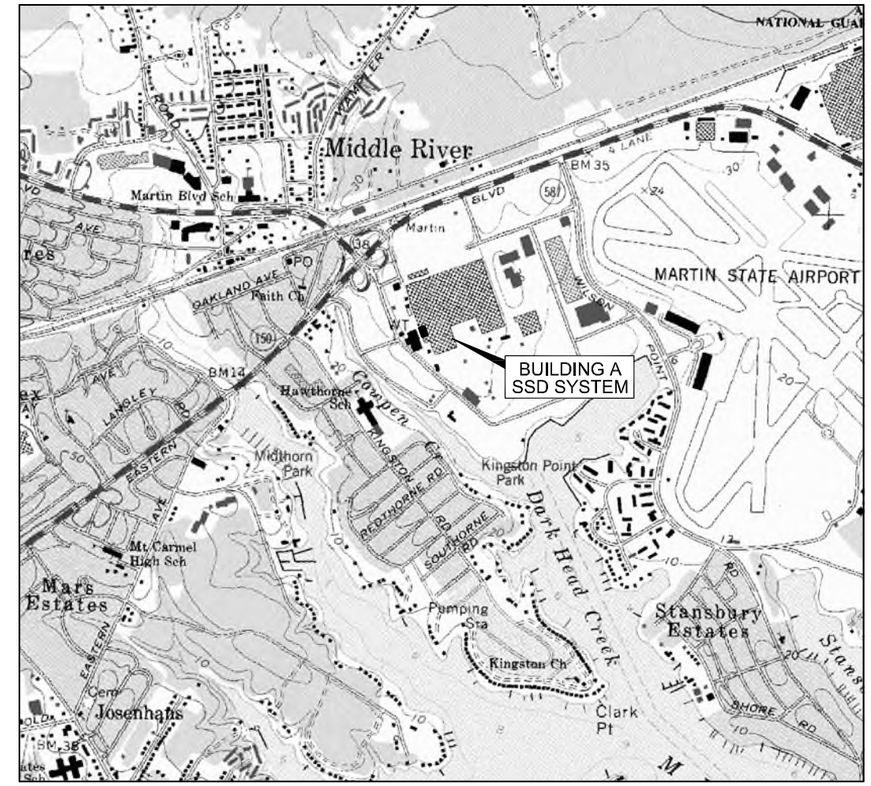

SITE LOCATION MAP

0 1000 2000 3000

SCALE IN FEET

APPROVED BY:	DATE	REVISION	APRVD.

TITLE: **AS-BUILT PLAN OVERVIEW**

SSD SYSTEM THIRD-PHASE EXPANSION - BUILDING A

LOCATION: LMC Middle River Complex, Middle River, Maryland

TETRA TECH

APPROVED	PAR
DRAFTED	CMP
PROJECT#	117-0512124
DATE	9-8-17

DRAWING: G1

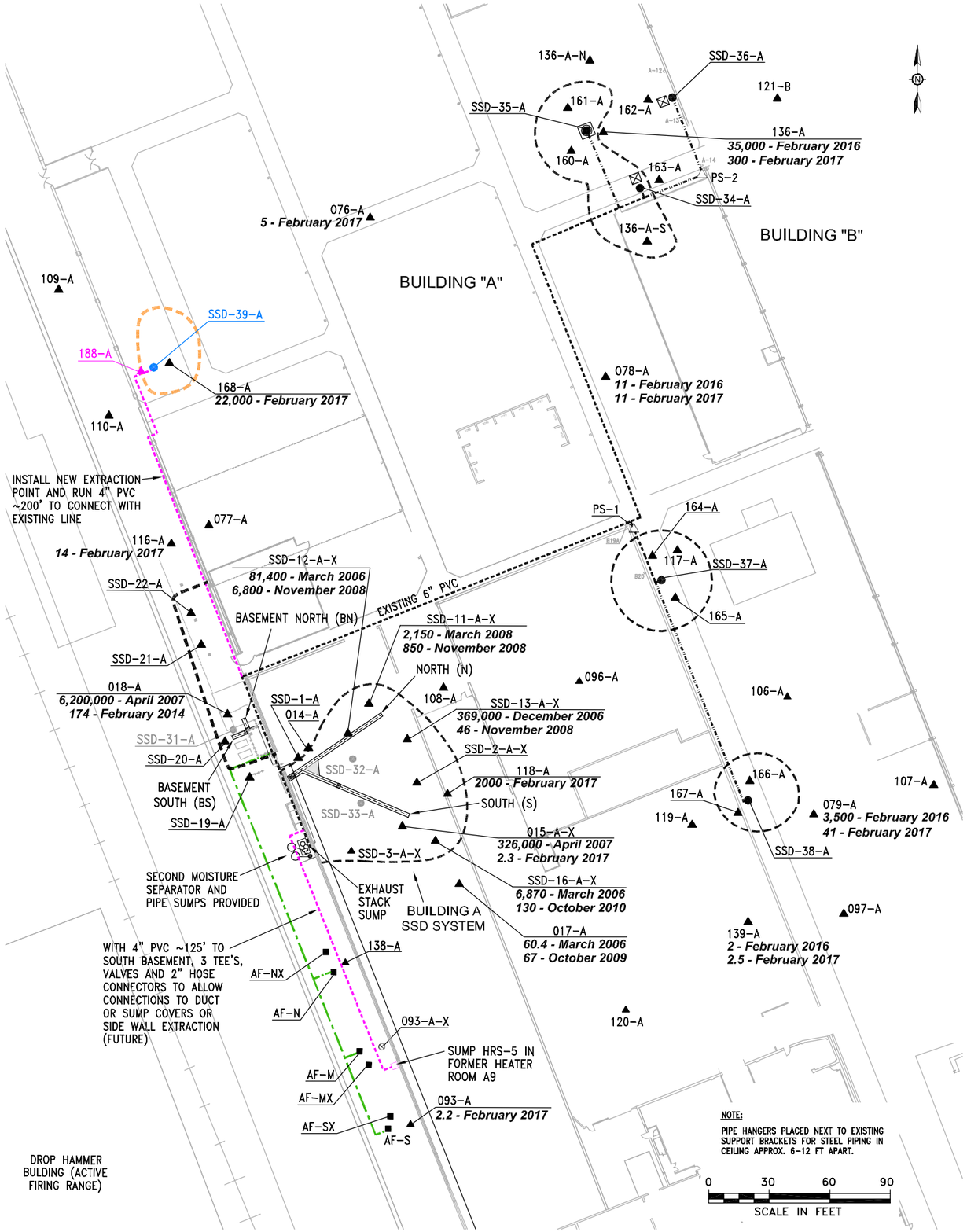

NOTE:

PIPE HANGERS PLACED NEXT TO EXISTING SUPPORT BRACKETS FOR STEEL PIPING IN CEILING APPROX. 6-12 FT APART.

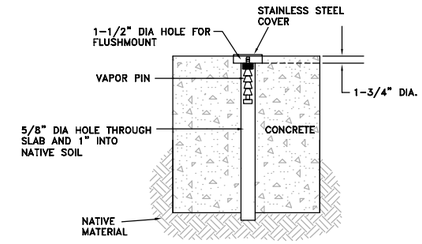

VAPOR MONITORING POINT DETAIL (188-A)
NOT TO SCALE

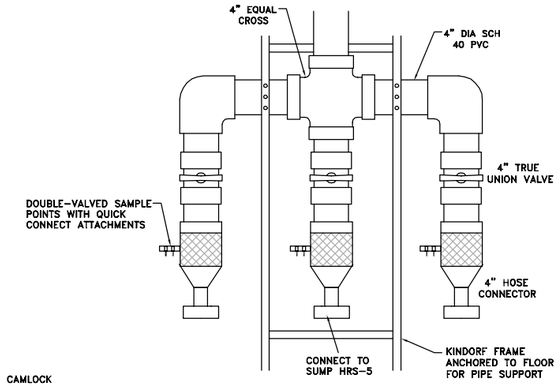

END OF SOUTH BASEMENT SSD SYSTEM PIPE EXTENSION
NOT TO SCALE

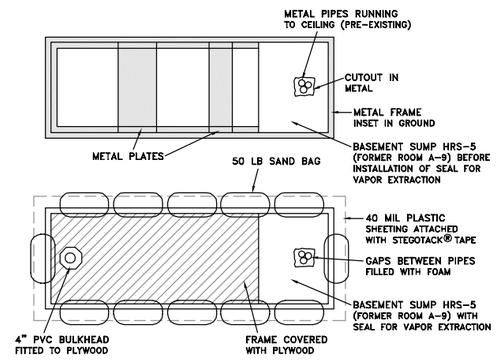

BASEMENT SUMP HRS-5 VACUUM SEAL - TOP VIEW
NOT TO SCALE

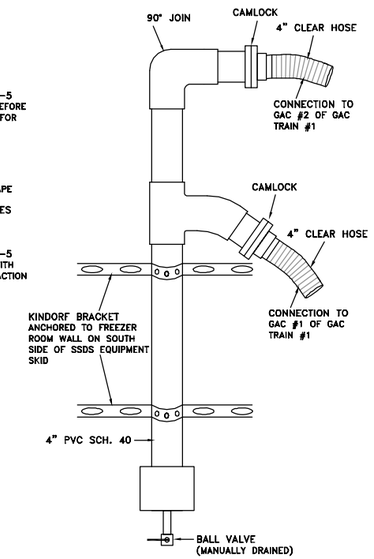

DRAIN STACK FOR USE IN WINTER
NOT TO SCALE

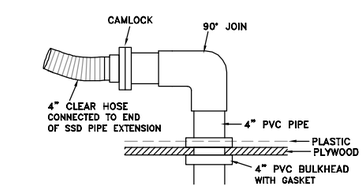

BASEMENT SUMP HRS-5 VACUUM SEAL BULKHEAD DETAIL
NOT TO SCALE

LEGEND

- SUB-SLAB VAPOR MONITORING POINT
- VERTICAL SUB-SLAB SOIL VAPOR EXTRACTION POINT
- NEW VERTICAL SUB-SLAB VAPOR EXTRACTION POINT
- SUB-SLAB VAPOR EXTRACTION POINT (USED IN PREVIOUS PILOT TEST)
- INDOOR AIR SAMPLING POINT
- NEW SUB-SLAB VAPOR MONITORING POINT
- SSD — SUB-SLAB DEPRESSURIZATION
- NEW 4" DIA. PVC HEADER
- INDOOR AIR FILTER CONNECTION TO EMERGENCY POWER SUPPLY (FIELD RUN)
- TARGET INFLUENCE AREA FOR SSD SYSTEM EXPANSION
- APPROXIMATE EXISTING INFLUENCE AREA
- INDOOR AIR FILTER
- SSD SYSTEM BLOWER SKID
- EXISTING SUB-SLAB VAPOR EXTRACTION LATERAL
- PIPE SUMP
- STEEL PIPE SLEEVE (4" DIA.)
- PIPE BOLLARD (2" DIA.)
- 3,500 — HIGHEST SUB-SLAB TCE CONCENTRATION ($\mu g/m^3$) PRE-SSD SYSTEM AND MOST RECENT CONCENTRATION POST-SSD SYSTEM OPERATION

WASHED PEA GRAVEL GRADATION	
SIEVE SIZE	PERCENT PASSING
1/2"	100%
3/8"	85 TO 100%
#4 (4.75MM)	10 TO 30%
#8 (2.36MM)	< 5%
#20 (0.85MM)	< 2%

NOTES:

A. GRAVEL MATERIAL SHALL CONFORM TO ASTM C-33 SPECIFICATIONS FOR 3/8"AGGREGATE.

B. GRAVEL SHALL BE SEMI-ROUND AND FREE OF ORGANIC MATERIAL.

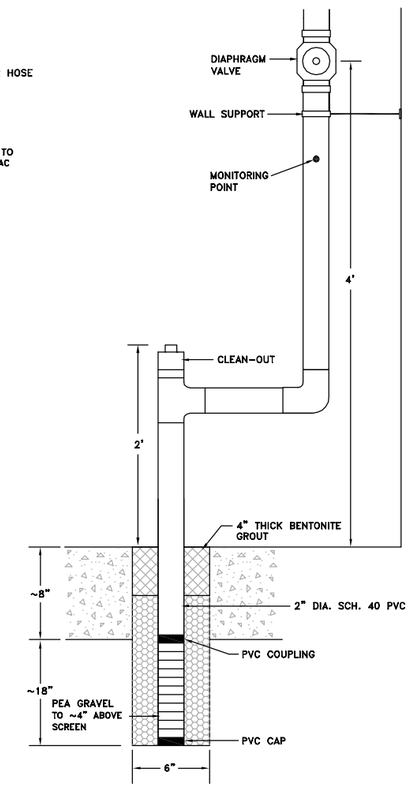

SSD-39-A DETAIL
NOT TO SCALE

APPROVED BY:	DATE	REVISION	APRVD.

TITLE: **AS-BUILT PIPING LAYOUT AND DETAILS**
SSD SYSTEM THIRD-PHASE EXPANSION - BUILDING A

LOCATION: **LMC Middle River Complex**
Middle River, Maryland

TETRA TECH

APPROVED	PAR	DRAWING:
DRAFTED	CMP	G2
PROJECT#	117-0512124	
DATE	9-8-17	

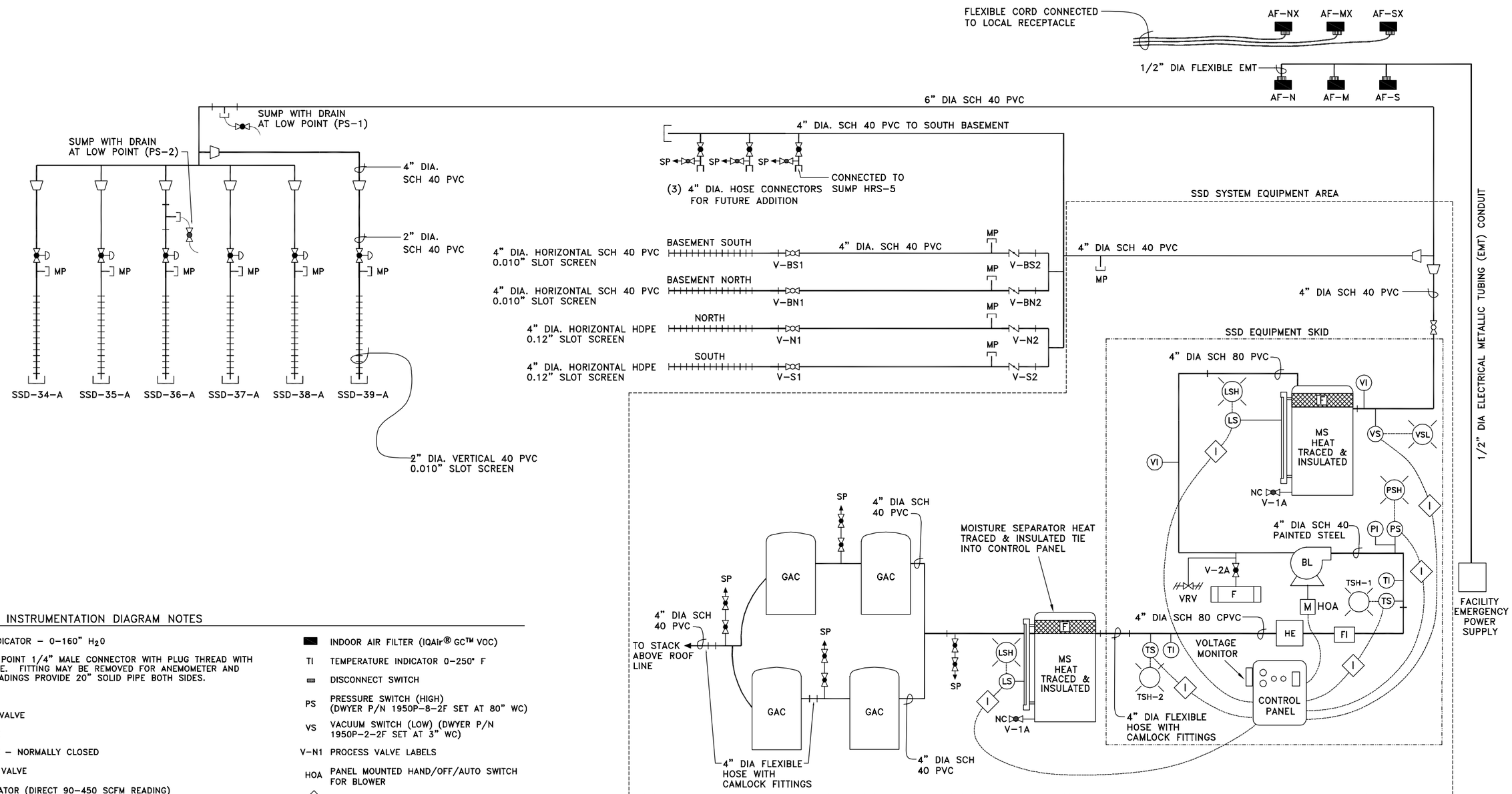

PROCESS AND INSTRUMENTATION DIAGRAM NOTES

VI	VACUUM INDICATOR – 0–160" H_2O
MP	MEASURING POINT 1/4" MALE CONNECTOR WITH PLUG THREAD WITH TEFLON TAPE. FITTING MAY BE REMOVED FOR ANEMOMETER AND VACUUM READINGS PROVIDE 20" SOLID PIPE BOTH SIDES.
	REDUCER
	BUTTERFLY VALVE
	BALL VALVE
	BALL VALVE – NORMALLY CLOSED
	DIAPHRAGM VALVE
FI	FLOW INDICATOR (DIRECT 90–450 SCFM READING)
F	INLET AIR FILTER
HE	HEAT EXCHANGER (XCHANGER AA–400)
MS	MOISTURE SEPARATOR (GASHO GX–100DL) WITH 40 GALLON CAPACITY, SLIGHT TUBE, REMOVABLE TOP, DRAIN VALVE
LS	LEVEL SWITCH
VRV	VACUUM RELIEF VALVE – 2" (SET AT 81.6" WC)
SP	SAMPLE PORT 1/4" DIAMETER
BL	AMETEK®, ROTRON® 909BB72W 10 HP MOTOR, 300 SCFM @ 75" H_2O
PI	PRESSURE INDICATOR 0–160" H_2O
TS	TEMPERATURE SWITCH (ASHCROFT P/N T424–T05–030–XFS–150–260; TSH–1 SET AT 220° F AND TSH–2 SET AT 115° F)
GAC	GRANULAR ACTIVATED CARBON VAPOR TREATMENT (SIEMENS VENT SCRUB® VSC400, VOCARB® 48C)
	INDOOR AIR FILTER (IQAir® GC™ VOC)
TI	TEMPERATURE INDICATOR 0–250° F
	DISCONNECT SWITCH
PS	PRESSURE SWITCH (HIGH) (DWYER P/N 1950P–8–2F SET AT 80" WC)
VS	VACUUM SWITCH (LOW) (DWYER P/N 1950P–2–2F SET AT 3" WC)
V–N1	PROCESS VALVE LABELS
HOA	PANEL MOUNTED HAND/OFF/AUTO SWITCH FOR BLOWER
I	INTERLOCK BLOWER SHUTDOWN
	LOCALLY MOUNTED INSTRUMENT
	PANEL ALARM LIGHT
H	HIGH
L	LOW
SSD	SUB–SLAB DEPRESSUIZATION
M	MOTOR
EMT	ELECTRICAL METALLIC TUBING

APPROVED BY:	DATE	REVISION	APRVD.

TITLE: **AS-BUILT**
PROCESS AND INSTRUMENTATION DIAGRAM
SSD SYSTEM THIRD-PHASE EXPANSION - BUILDING A

LOCATION: **LMC Middle River Complex**
Middle River, Maryland

TETRA TECH

APPROVED	PAR	DRAWING:
DRAFTED	CMP	G3
PROJECT#	117–0512124	
DATE	9–8–17	

APPENDIX C—CONSTRUCTION LOG FOR NEW EXTRACTION POINT (SSD-39-A)

PROJECT:	BUILDING A SSD SYSTEM THIRD-PHASE EXPANSION	PROJECT NUMBER	EXTRACTION POINT ID	INSTALLATION START	INSTALLATION END	SHEET
		117-0512124	SSD-39-A	6/20/2017	6/20/2017	1 OF 1
LOCATION:	LOCKHEED MARTIN CORPORATION MIDDLE RIVER COMPLEX MIDDLE RIVER, MARYLAND	NOTES:				

SCREEN MATERIAL: 2-INCH DIA. SCH. 40 PVC, 0.020 INCH SLOTTED	**INSTALLATION COMPANY:** S&S TECHNOLOGIES
RISER MATERIAL: 2-INCH DIA. SCH. 40 PVC, SOLID CASING	**INSTALLATION METHOD:** CONCRETE CORE/HAND AUGER
FILTER PACK: 3/8-INCH WASHED PEA GRAVEL	**LOGGED BY:** TETRA TECH/MICHAEL WILKS
SEAL/GROUT:	**TOTAL DEPTH:** 19.5 INCHES (10.5 INCHES BELOW BOTTOM OF SLAB)

DEPTH (INCHES)	PID READING (PPM)	MOISTURE CONTENT	LITHOLOGY	USCS
1–9	N/A		CONCRETE (9 INCHES)	N/A
10–19	NA	DRY	TAN, CLAYEY SILT, TRACE SAND GRADING TO NO SAND, SOFT	ML

EXTRACTION POINT INSTALLATION DETAIL

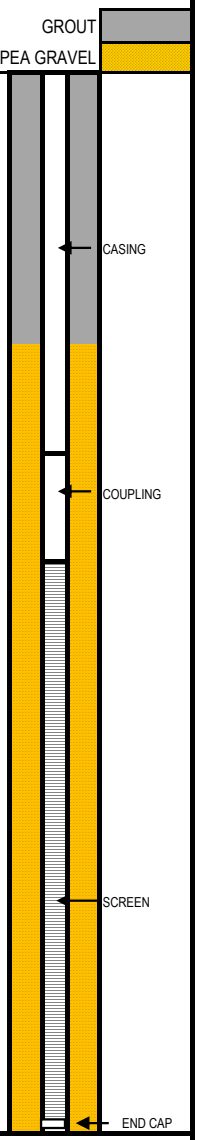

TOTAL DEPTH = 19.5 INCHES (10.5 INCHES BELOW BOTTOM OF SLAB)

APPENDIX D—GEOPHYSICAL UTILITY-INVESTIGATION REPORT

June 13, 2017

Mr. Michael Martin
Tetra Tech NUS, Inc.
20251 Century Boulevard
Suite 200
Germantown, MD 20874-7114

RE: Geophysical Survey
Utility/Structure Clearance – Building A Vapor Sites
Two Client Designated Areas
Middle River, MD
Enviroscan Reference Number 041758e

Dear Mr. Martin:

On June 8, 2017, Enviroscan, Inc. (Enviroscan) visited the above-referenced site with the purpose of locating underground metallic and non-metallic utilities (i.e. sanitary, storm, gas, telephone, water and electric lines) in two client-designated areas within Building A.

During the survey, each location was scanned with a Radiodetection RD-8000, Radiodetection C.A.T.^{3}, and a GSSI dual frequency ground penetrating radar (GPR) system. Anomalous features and suspected underground utilities were marked on the ground with street chalk. Access was limited in both areas. The general locations were clear; however, electromagnetic anomalies were detected within adjacent walls - as well as conduits in close proximity to both location. Please note that the GPR depth of investigation was limited due to poor signal penetration.

The above-referenced geophysical survey was completed using standard and/or routinely accepted practices of the geophysical industry and equipment representing the best available technology. Enviroscan does not accept responsibility for survey limitations due to inherent technological limitations or unforeseen site-specific conditions. However, we make every effort to identify and notify the client of such limitations or conditions. In addition, please note that the completion of this survey does not relieve any party of applicable legal obligations to notify the appropriate One-Call center prior to digging or drilling.

As always, we appreciate this opportunity to have worked with you again. If you have any questions, please do not hesitate to contact me.

Sincerely,
Enviroscan, Inc.

Charles H. Rhine, M.Sc., P.G.
Senior Geophysics Project Manager

1051 Columbia Avenue ● Lancaster, PA 17603 ● 717.396.8922 ● Fax 717.396.8746 ● email@enviroscan.com ● www.enviroscan.com

APPENDIX E—ANALYTICAL REPORTS

BASEMENT SUMP HRS-5 EXTRACTION VAPOR SAMPLES (July 6, 2017)

SSD SYSTEM SAMPLES (July 6, 2017)

WASTE SOIL, CONCRETE CORE, WATER SAMPLES (June 28, 2017)

TestAmerica

THE LEADER IN ENVIRONMENTAL TESTING

ANALYTICAL REPORT

TestAmerica Laboratories, Inc.
TestAmerica Knoxville
5815 Middlebrook Pike
Knoxville, TN 37921
Tel: (865)291-3000

TestAmerica Job ID: 140-8631-1
Client Project/Site: Lockheed Martin MRAS - BLDG-A/Basement

For:
Tetra Tech GEO
51 Franklin Street
Suite 400
Annapolis, Maryland 21401

Attn: Peter Rich

Authorized for release by:
7/17/2017 10:13:44 AM

Terry Walker Wasmund, Project Manager II
(865)291-3000
terry.wasmund@testamericainc.com

LINKS

Review your project results through TotalAccess

Have a Question? Ask The Expert

Visit us at: www.testamericainc.com

This report may not be reproduced except in full, and with written approval from the laboratory. For questions please contact the Project Manager at the e-mail address or telephone number listed on this page.

Table of Contents

Cover Page 1
Table of Contents 2
Definitions/Glossary 3
Case Narrative 4
Detection Summary 5
Client Sample Results 7
Default Detection Limits 15
Surrogate Summary 16
QC Sample Results 17
QC Association Summary 20
Lab Chronicle 21
Method Summary 23
Sample Summary 24
Chain of Custody 25

Definitions/Glossary

Client: Tetra Tech GEO
Project/Site: Lockheed Martin MRAS - BLDG-A/Basement

TestAmerica Job ID: 140-8631-1

Qualifiers

Air - GC/MS VOA

Qualifier	Qualifier Description
J	Result is less than the RL but greater than or equal to the MDL and the concentration is an approximate value.
B	Compound was found in the blank and sample.

Glossary

Abbreviation	These commonly used abbreviations may or may not be present in this report.
¤	Listed under the "D" column to designate that the result is reported on a dry weight basis
%R	Percent Recovery
CFL	Contains Free Liquid
CNF	Contains No Free Liquid
DER	Duplicate Error Ratio (normalized absolute difference)
Dil Fac	Dilution Factor
DL	Detection Limit (DoD/DOE)
DL, RA, RE, IN	Indicates a Dilution, Re-analysis, Re-extraction, or additional Initial metals/anion analysis of the sample
DLC	Decision Level Concentration (Radiochemistry)
EDL	Estimated Detection Limit (Dioxin)
LOD	Limit of Detection (DoD/DOE)
LOQ	Limit of Quantitation (DoD/DOE)
MDA	Minimum Detectable Activity (Radiochemistry)
MDC	Minimum Detectable Concentration (Radiochemistry)
MDL	Method Detection Limit
ML	Minimum Level (Dioxin)
NC	Not Calculated
ND	Not Detected at the reporting limit (or MDL or EDL if shown)
PQL	Practical Quantitation Limit
QC	Quality Control
RER	Relative Error Ratio (Radiochemistry)
RL	Reporting Limit or Requested Limit (Radiochemistry)
RPD	Relative Percent Difference, a measure of the relative difference between two points
TEF	Toxicity Equivalent Factor (Dioxin)
TEQ	Toxicity Equivalent Quotient (Dioxin)

Job ID: 140-8631-1

Laboratory: TestAmerica Knoxville

Narrative

Job Narrative
140-8631-1

Receipt
The samples were received on 7/7/2017 at 9:40 AM. The samples arrived in good condition and properly preserved.

Air - GC/MS VOA
Method(s) D1946, TO 15 LL, TO-15: EPA methods TO-14A and TO-15 specify the use of humidified “zero air” as the blank reagent for canister cleaning, instrument calibration and sample analysis. Ultra-high purity humidified nitrogen from a cryogenic reservoir is used in place of “zero air” by TestAmerica Knoxville.

No additional analytical or quality issues were noted, other than those described above or in the Definitions/Glossary page.

Comments
No additional comments.

Detection Summary

Client: Tetra Tech GEO
Project/Site: Lockheed Martin MRAS - BLDG-A/Basement

TestAmerica Job ID: 140-8631-1

Client Sample ID: A-BSMT 25 START — Lab Sample ID: 140-8631-1

Analyte	Result	Qualifier	RL	MDL	Unit	Dil Fac	D	Method	Prep Type
cis-1,2-Dichloroethene	240		110	33	ppb v/v	41.08		TO 15 LL	Total/NA
1,1-Dichloroethane	45	J	110	14	ppb v/v	41.08		TO 15 LL	Total/NA
1,1-Dichloroethene	1400		110	19	ppb v/v	41.08		TO 15 LL	Total/NA
Trichloroethene	9600		55	19	ppb v/v	41.08		TO 15 LL	Total/NA

Analyte	Result	Qualifier	RL	MDL	Unit	Dil Fac	D	Method	Prep Type
cis-1,2-Dichloroethene	970		430	130	ug/m3	41.08		TO 15 LL	Total/NA
1,1-Dichloroethane	180	J	440	55	ug/m3	41.08		TO 15 LL	Total/NA
1,1-Dichloroethene	5500		430	76	ug/m3	41.08		TO 15 LL	Total/NA
Trichloroethene	52000		290	100	ug/m3	41.08		TO 15 LL	Total/NA

Client Sample ID: A-BSMT 25 END — Lab Sample ID: 140-8631-2

Analyte	Result	Qualifier	RL	MDL	Unit	Dil Fac	D	Method	Prep Type
cis-1,2-Dichloroethene	34		21	6.2	ppb v/v	12.94		TO 15 LL	Total/NA
1,1-Dichloroethane	7.8	J	21	2.6	ppb v/v	12.94		TO 15 LL	Total/NA
1,1-Dichloroethene	130		21	3.6	ppb v/v	12.94		TO 15 LL	Total/NA
trans-1,2-Dichloroethene	7.2	J	21	5.2	ppb v/v	12.94		TO 15 LL	Total/NA
Trichloroethene	1400		10	3.6	ppb v/v	12.94		TO 15 LL	Total/NA

Analyte	Result	Qualifier	RL	MDL	Unit	Dil Fac	D	Method	Prep Type
cis-1,2-Dichloroethene	140		82	25	ug/m3	12.94		TO 15 LL	Total/NA
1,1-Dichloroethane	32	J	84	10	ug/m3	12.94		TO 15 LL	Total/NA
1,1-Dichloroethene	530		82	14	ug/m3	12.94		TO 15 LL	Total/NA
trans-1,2-Dichloroethene	28	J	82	21	ug/m3	12.94		TO 15 LL	Total/NA
Trichloroethene	7300		56	19	ug/m3	12.94		TO 15 LL	Total/NA

Client Sample ID: A-BSMT 50 START — Lab Sample ID: 140-8631-3

Analyte	Result	Qualifier	RL	MDL	Unit	Dil Fac	D	Method	Prep Type
cis-1,2-Dichloroethene	30		16	4.9	ppb v/v	12.37		TO 15 LL	Total/NA
1,1-Dichloroethane	6.0	J	16	2.1	ppb v/v	12.37		TO 15 LL	Total/NA
1,1-Dichloroethene	100		16	2.9	ppb v/v	12.37		TO 15 LL	Total/NA
trans-1,2-Dichloroethene	5.5	J	16	4.1	ppb v/v	12.37		TO 15 LL	Total/NA
Trichloroethene	1200		8.2	2.9	ppb v/v	12.37		TO 15 LL	Total/NA

Analyte	Result	Qualifier	RL	MDL	Unit	Dil Fac	D	Method	Prep Type
cis-1,2-Dichloroethene	120		65	20	ug/m3	12.37		TO 15 LL	Total/NA
1,1-Dichloroethane	24	J	67	8.3	ug/m3	12.37		TO 15 LL	Total/NA
1,1-Dichloroethene	400		65	11	ug/m3	12.37		TO 15 LL	Total/NA
trans-1,2-Dichloroethene	22	J	65	16	ug/m3	12.37		TO 15 LL	Total/NA
Trichloroethene	6500		44	16	ug/m3	12.37		TO 15 LL	Total/NA

Client Sample ID: A-BSMT 50 END — Lab Sample ID: 140-8631-4

Analyte	Result	Qualifier	RL	MDL	Unit	Dil Fac	D	Method	Prep Type
Chlorodifluoromethane	2.5	J	9.1	1.7	ppb v/v	3.65		TO 15 LL	Total/NA
cis-1,2-Dichloroethene	18		9.1	2.7	ppb v/v	3.65		TO 15 LL	Total/NA
1,1-Dichloroethane	3.2	J	9.1	1.1	ppb v/v	3.65		TO 15 LL	Total/NA
1,1-Dichloroethene	52		9.1	1.6	ppb v/v	3.65		TO 15 LL	Total/NA
trans-1,2-Dichloroethene	3.0	J	9.1	2.3	ppb v/v	3.65		TO 15 LL	Total/NA
1,1,1-Trichloroethane	1.5	J B	9.1	1.4	ppb v/v	3.65		TO 15 LL	Total/NA
Trichloroethene	910		4.6	1.6	ppb v/v	3.65		TO 15 LL	Total/NA

This Detection Summary does not include radiochemical test results.

Detection Summary

Client: Tetra Tech GEO
Project/Site: Lockheed Martin MRAS - BLDG-A/Basement

TestAmerica Job ID: 140-8631-1

Client Sample ID: A-BSMT 50 END (Continued) — Lab Sample ID: 140-8631-4

Analyte	Result	Qualifier	RL	MDL	Unit	Dil Fac	D	Method	Prep Type
Chlorodifluoromethane	8.9	J	32	6.1	ug/m3	3.65		TO 15 LL	Total/NA
cis-1,2-Dichloroethene	73		36	11	ug/m3	3.65		TO 15 LL	Total/NA
1,1-Dichloroethane	13	J	37	4.6	ug/m3	3.65		TO 15 LL	Total/NA
1,1-Dichloroethene	200		36	6.3	ug/m3	3.65		TO 15 LL	Total/NA
trans-1,2-Dichloroethene	12	J	36	9.0	ug/m3	3.65		TO 15 LL	Total/NA
1,1,1-Trichloroethane	7.9	J B	50	7.5	ug/m3	3.65		TO 15 LL	Total/NA
Trichloroethene	4900		25	8.6	ug/m3	3.65		TO 15 LL	Total/NA

This Detection Summary does not include radiochemical test results.

Client Sample Results

Client: Tetra Tech GEO
Project/Site: Lockheed Martin MRAS - BLDG-A/Basement

TestAmerica Job ID: 140-8631-1

Client Sample ID: A-BSMT 25 START

Lab Sample ID: 140-8631-1

Date Collected: 07/06/17 10:58
Matrix: Air
Date Received: 07/07/17 09:40
Sample Container: Summa Canister 1L

Method: TO 15 LL - Volatile Organic Compounds in Ambient Air, Low Concentration (GC/MS)

Analyte	Result	Qualifier	RL	MDL	Unit	D	Prepared	Analyzed	Dil Fac
Benzene	ND		110	31	ppb v/v			07/11/17 19:09	41.08
Carbon tetrachloride	ND		110	21	ppb v/v			07/11/17 19:09	41.08
Chlorodifluoromethane	ND		110	21	ppb v/v			07/11/17 19:09	41.08
Chloroform	ND		110	21	ppb v/v			07/11/17 19:09	41.08
cis-1,2-Dichloroethene	**240**		110	33	ppb v/v			07/11/17 19:09	41.08
Dichlorodifluoromethane	ND		110	37	ppb v/v			07/11/17 19:09	41.08
1,1-Dichloroethane	**45**	**J**	110	14	ppb v/v			07/11/17 19:09	41.08
1,2-Dichloroethane	ND		110	26	ppb v/v			07/11/17 19:09	41.08
1,1-Dichloroethene	**1400**		110	19	ppb v/v			07/11/17 19:09	41.08
Ethylbenzene	ND		110	37	ppb v/v			07/11/17 19:09	41.08
Methylene Chloride	ND		270	180	ppb v/v			07/11/17 19:09	41.08
Methyl tert-butyl ether	ND		550	93	ppb v/v			07/11/17 19:09	41.08
Naphthalene	ND		55	55	ppb v/v			07/11/17 19:09	41.08
Tetrachloroethene	ND		110	22	ppb v/v			07/11/17 19:09	41.08
Toluene	ND		160	160	ppb v/v			07/11/17 19:09	41.08
trans-1,2-Dichloroethene	ND		110	27	ppb v/v			07/11/17 19:09	41.08
1,2,4-Trichlorobenzene	ND		110	53	ppb v/v			07/11/17 19:09	41.08
1,1,1-Trichloroethane	ND		110	16	ppb v/v			07/11/17 19:09	41.08
1,1,2-Trichloroethane	ND		110	29	ppb v/v			07/11/17 19:09	41.08
Trichloroethene	**9600**		55	19	ppb v/v			07/11/17 19:09	41.08
1,2,3-Trimethylbenzene	ND		110	47	ppb v/v			07/11/17 19:09	41.08
1,2,4-Trimethylbenzene	ND		110	34	ppb v/v			07/11/17 19:09	41.08
1,3,5-Trimethylbenzene	ND		110	36	ppb v/v			07/11/17 19:09	41.08
Vinyl chloride	ND		55	40	ppb v/v			07/11/17 19:09	41.08
Xylenes, Total	ND		220	33	ppb v/v			07/11/17 19:09	41.08

Analyte	Result	Qualifier	RL	MDL	Unit	D	Prepared	Analyzed	Dil Fac
Benzene	ND		350	100	ug/m3			07/11/17 19:09	41.08
Carbon tetrachloride	ND		690	130	ug/m3			07/11/17 19:09	41.08
Chlorodifluoromethane	ND		390	73	ug/m3			07/11/17 19:09	41.08
Chloroform	ND		530	100	ug/m3			07/11/17 19:09	41.08
cis-1,2-Dichloroethene	**970**		430	130	ug/m3			07/11/17 19:09	41.08
Dichlorodifluoromethane	ND		540	180	ug/m3			07/11/17 19:09	41.08
1,1-Dichloroethane	**180**	**J**	440	55	ug/m3			07/11/17 19:09	41.08
1,2-Dichloroethane	ND		440	110	ug/m3			07/11/17 19:09	41.08
1,1-Dichloroethene	**5500**		430	76	ug/m3			07/11/17 19:09	41.08
Ethylbenzene	ND		480	160	ug/m3			07/11/17 19:09	41.08
Methylene Chloride	ND		950	620	ug/m3			07/11/17 19:09	41.08
Methyl tert-butyl ether	ND		2000	340	ug/m3			07/11/17 19:09	41.08
Naphthalene	ND		290	290	ug/m3			07/11/17 19:09	41.08
Tetrachloroethene	ND		740	150	ug/m3			07/11/17 19:09	41.08
Toluene	ND		620	620	ug/m3			07/11/17 19:09	41.08
trans-1,2-Dichloroethene	ND		430	110	ug/m3			07/11/17 19:09	41.08
1,2,4-Trichlorobenzene	ND		810	400	ug/m3			07/11/17 19:09	41.08
1,1,1-Trichloroethane	ND		600	90	ug/m3			07/11/17 19:09	41.08
1,1,2-Trichloroethane	ND		600	160	ug/m3			07/11/17 19:09	41.08
Trichloroethene	**52000**		290	100	ug/m3			07/11/17 19:09	41.08
1,2,3-Trimethylbenzene	ND		540	230	ug/m3			07/11/17 19:09	41.08
1,2,4-Trimethylbenzene	ND		540	170	ug/m3			07/11/17 19:09	41.08

Client Sample Results

Client: Tetra Tech GEO
Project/Site: Lockheed Martin MRAS - BLDG-A/Basement

TestAmerica Job ID: 140-8631-1

Client Sample ID: A-BSMT 25 START

Lab Sample ID: 140-8631-1
Matrix: Air

Date Collected: 07/06/17 10:58
Date Received: 07/07/17 09:40
Sample Container: Summa Canister 1L

Method: TO 15 LL - Volatile Organic Compounds in Ambient Air, Low Concentration (GC/MS) (Continued)

Analyte	Result	Qualifier	RL	MDL	Unit	D	Prepared	Analyzed	Dil Fac
1,3,5-Trimethylbenzene	ND		540	180	ug/m3			07/11/17 19:09	41.08
Vinyl chloride	ND		140	100	ug/m3			07/11/17 19:09	41.08
Xylenes, Total	ND		950	140	ug/m3			07/11/17 19:09	41.08

Surrogate	*%Recovery*	*Qualifier*	*Limits*	*Prepared*	*Analyzed*	*Dil Fac*
4-Bromofluorobenzene (Surr)	*100*		*60 - 140*		*07/11/17 19:09*	*41.08*

Client Sample Results

Client: Tetra Tech GEO
Project/Site: Lockheed Martin MRAS - BLDG-A/Basement

TestAmerica Job ID: 140-8631-1

Client Sample ID: A-BSMT 25 END

Lab Sample ID: 140-8631-2

Date Collected: 07/06/17 12:02
Matrix: Air
Date Received: 07/07/17 09:40
Sample Container: Summa Canister 1L

Method: TO 15 LL - Volatile Organic Compounds in Ambient Air, Low Concentration (GC/MS)

Analyte	Result	Qualifier	RL	MDL	Unit	D	Prepared	Analyzed	Dil Fac
Benzene	ND		21	6.0	ppb v/v			07/11/17 19:51	12.94
Carbon tetrachloride	ND		21	3.9	ppb v/v			07/11/17 19:51	12.94
Chlorodifluoromethane	ND		21	3.9	ppb v/v			07/11/17 19:51	12.94
Chloroform	ND		21	3.9	ppb v/v			07/11/17 19:51	12.94
cis-1,2-Dichloroethene	**34**		21	6.2	ppb v/v			07/11/17 19:51	12.94
Dichlorodifluoromethane	ND		21	7.0	ppb v/v			07/11/17 19:51	12.94
1,1-Dichloroethane	**7.8**	**J**	21	2.6	ppb v/v			07/11/17 19:51	12.94
1,2-Dichloroethane	ND		21	4.9	ppb v/v			07/11/17 19:51	12.94
1,1-Dichloroethene	**130**		21	3.6	ppb v/v			07/11/17 19:51	12.94
Ethylbenzene	ND		21	7.0	ppb v/v			07/11/17 19:51	12.94
Methylene Chloride	ND		52	34	ppb v/v			07/11/17 19:51	12.94
Methyl tert-butyl ether	ND		100	18	ppb v/v			07/11/17 19:51	12.94
Naphthalene	ND		10	10	ppb v/v			07/11/17 19:51	12.94
Tetrachloroethene	ND		21	4.1	ppb v/v			07/11/17 19:51	12.94
Toluene	ND		31	31	ppb v/v			07/11/17 19:51	12.94
trans-1,2-Dichloroethene	**7.2**	**J**	21	5.2	ppb v/v			07/11/17 19:51	12.94
1,2,4-Trichlorobenzene	ND		21	10	ppb v/v			07/11/17 19:51	12.94
1,1,1-Trichloroethane	ND		21	3.1	ppb v/v			07/11/17 19:51	12.94
1,1,2-Trichloroethane	ND		21	5.4	ppb v/v			07/11/17 19:51	12.94
Trichloroethene	**1400**		10	3.6	ppb v/v			07/11/17 19:51	12.94
1,2,3-Trimethylbenzene	ND		21	8.8	ppb v/v			07/11/17 19:51	12.94
1,2,4-Trimethylbenzene	ND		21	6.5	ppb v/v			07/11/17 19:51	12.94
1,3,5-Trimethylbenzene	ND		21	6.7	ppb v/v			07/11/17 19:51	12.94
Vinyl chloride	ND		10	7.5	ppb v/v			07/11/17 19:51	12.94
Xylenes, Total	ND		41	6.2	ppb v/v			07/11/17 19:51	12.94

Analyte	Result	Qualifier	RL	MDL	Unit	D	Prepared	Analyzed	Dil Fac
Benzene	ND		66	19	ug/m3			07/11/17 19:51	12.94
Carbon tetrachloride	ND		130	24	ug/m3			07/11/17 19:51	12.94
Chlorodifluoromethane	ND		73	14	ug/m3			07/11/17 19:51	12.94
Chloroform	ND		100	19	ug/m3			07/11/17 19:51	12.94
cis-1,2-Dichloroethene	**140**		82	25	ug/m3			07/11/17 19:51	12.94
Dichlorodifluoromethane	ND		100	35	ug/m3			07/11/17 19:51	12.94
1,1-Dichloroethane	**32**	**J**	84	10	ug/m3			07/11/17 19:51	12.94
1,2-Dichloroethane	ND		84	20	ug/m3			07/11/17 19:51	12.94
1,1-Dichloroethene	**530**		82	14	ug/m3			07/11/17 19:51	12.94
Ethylbenzene	ND		90	30	ug/m3			07/11/17 19:51	12.94
Methylene Chloride	ND		180	120	ug/m3			07/11/17 19:51	12.94
Methyl tert-butyl ether	ND		370	63	ug/m3			07/11/17 19:51	12.94
Naphthalene	ND		54	54	ug/m3			07/11/17 19:51	12.94
Tetrachloroethene	ND		140	28	ug/m3			07/11/17 19:51	12.94
Toluene	ND		120	120	ug/m3			07/11/17 19:51	12.94
trans-1,2-Dichloroethene	**28**	**J**	82	21	ug/m3			07/11/17 19:51	12.94
1,2,4-Trichlorobenzene	ND		150	75	ug/m3			07/11/17 19:51	12.94
1,1,1-Trichloroethane	ND		110	17	ug/m3			07/11/17 19:51	12.94
1,1,2-Trichloroethane	ND		110	30	ug/m3			07/11/17 19:51	12.94
Trichloroethene	**7300**		56	19	ug/m3			07/11/17 19:51	12.94
1,2,3-Trimethylbenzene	ND		100	43	ug/m3			07/11/17 19:51	12.94
1,2,4-Trimethylbenzene	ND		100	32	ug/m3			07/11/17 19:51	12.94

Client Sample Results

Client: Tetra Tech GEO
Project/Site: Lockheed Martin MRAS - BLDG-A/Basement

TestAmerica Job ID: 140-8631-1

Client Sample ID: A-BSMT 25 END

Lab Sample ID: 140-8631-2
Matrix: Air

Date Collected: 07/06/17 12:02
Date Received: 07/07/17 09:40
Sample Container: Summa Canister 1L

Method: TO 15 LL - Volatile Organic Compounds in Ambient Air, Low Concentration (GC/MS) (Continued)

Analyte	Result	Qualifier	RL	MDL	Unit	D	Prepared	Analyzed	Dil Fac
1,3,5-Trimethylbenzene	ND		100	33	ug/m3			07/11/17 19:51	12.94
Vinyl chloride	ND		26	19	ug/m3			07/11/17 19:51	12.94
Xylenes, Total	ND		180	27	ug/m3			07/11/17 19:51	12.94

Surrogate	*%Recovery*	*Qualifier*	*Limits*	*Prepared*	*Analyzed*	*Dil Fac*
4-Bromofluorobenzene (Surr)	*96*		*60 - 140*		*07/11/17 19:51*	*12.94*

Client Sample Results

Client: Tetra Tech GEO
Project/Site: Lockheed Martin MRAS - BLDG-A/Basement

TestAmerica Job ID: 140-8631-1

Client Sample ID: A-BSMT 50 START

Lab Sample ID: 140-8631-3

Date Collected: 07/06/17 12:12
Date Received: 07/07/17 09:40
Sample Container: Summa Canister 1L

Matrix: Air

Method: TO 15 LL - Volatile Organic Compounds in Ambient Air, Low Concentration (GC/MS)

Analyte	Result	Qualifier	RL	MDL	Unit	D	Prepared	Analyzed	Dil Fac
Benzene	ND		16	4.7	ppb v/v			07/11/17 20:36	12.37
Carbon tetrachloride	ND		16	3.1	ppb v/v			07/11/17 20:36	12.37
Chlorodifluoromethane	ND		16	3.1	ppb v/v			07/11/17 20:36	12.37
Chloroform	ND		16	3.1	ppb v/v			07/11/17 20:36	12.37
cis-1,2-Dichloroethene	**30**		16	4.9	ppb v/v			07/11/17 20:36	12.37
Dichlorodifluoromethane	ND		16	5.6	ppb v/v			07/11/17 20:36	12.37
1,1-Dichloroethane	**6.0**	**J**	16	2.1	ppb v/v			07/11/17 20:36	12.37
1,2-Dichloroethane	ND		16	3.9	ppb v/v			07/11/17 20:36	12.37
1,1-Dichloroethene	**100**		16	2.9	ppb v/v			07/11/17 20:36	12.37
Ethylbenzene	ND		16	5.6	ppb v/v			07/11/17 20:36	12.37
Methylene Chloride	ND		41	27	ppb v/v			07/11/17 20:36	12.37
Methyl tert-butyl ether	ND		82	14	ppb v/v			07/11/17 20:36	12.37
Naphthalene	ND		8.2	8.2	ppb v/v			07/11/17 20:36	12.37
Tetrachloroethene	ND		16	3.3	ppb v/v			07/11/17 20:36	12.37
Toluene	ND		25	25	ppb v/v			07/11/17 20:36	12.37
trans-1,2-Dichloroethene	**5.5**	**J**	16	4.1	ppb v/v			07/11/17 20:36	12.37
1,2,4-Trichlorobenzene	ND		16	8.0	ppb v/v			07/11/17 20:36	12.37
1,1,1-Trichloroethane	ND		16	2.5	ppb v/v			07/11/17 20:36	12.37
1,1,2-Trichloroethane	ND		16	4.3	ppb v/v			07/11/17 20:36	12.37
Trichloroethene	**1200**		8.2	2.9	ppb v/v			07/11/17 20:36	12.37
1,2,3-Trimethylbenzene	ND		16	7.0	ppb v/v			07/11/17 20:36	12.37
1,2,4-Trimethylbenzene	ND		16	5.2	ppb v/v			07/11/17 20:36	12.37
1,3,5-Trimethylbenzene	ND		16	5.4	ppb v/v			07/11/17 20:36	12.37
Vinyl chloride	ND		8.2	6.0	ppb v/v			07/11/17 20:36	12.37
Xylenes, Total	ND		33	4.9	ppb v/v			07/11/17 20:36	12.37

Analyte	Result	Qualifier	RL	MDL	Unit	D	Prepared	Analyzed	Dil Fac
Benzene	ND		53	15	ug/m3			07/11/17 20:36	12.37
Carbon tetrachloride	ND		100	19	ug/m3			07/11/17 20:36	12.37
Chlorodifluoromethane	ND		58	11	ug/m3			07/11/17 20:36	12.37
Chloroform	ND		81	15	ug/m3			07/11/17 20:36	12.37
cis-1,2-Dichloroethene	**120**		65	20	ug/m3			07/11/17 20:36	12.37
Dichlorodifluoromethane	ND		82	28	ug/m3			07/11/17 20:36	12.37
1,1-Dichloroethane	**24**	**J**	67	8.3	ug/m3			07/11/17 20:36	12.37
1,2-Dichloroethane	ND		67	16	ug/m3			07/11/17 20:36	12.37
1,1-Dichloroethene	**400**		65	11	ug/m3			07/11/17 20:36	12.37
Ethylbenzene	ND		72	24	ug/m3			07/11/17 20:36	12.37
Methylene Chloride	ND		140	93	ug/m3			07/11/17 20:36	12.37
Methyl tert-butyl ether	ND		300	51	ug/m3			07/11/17 20:36	12.37
Naphthalene	ND		43	43	ug/m3			07/11/17 20:36	12.37
Tetrachloroethene	ND		110	22	ug/m3			07/11/17 20:36	12.37
Toluene	ND		93	93	ug/m3			07/11/17 20:36	12.37
trans-1,2-Dichloroethene	**22**	**J**	65	16	ug/m3			07/11/17 20:36	12.37
1,2,4-Trichlorobenzene	ND		120	60	ug/m3			07/11/17 20:36	12.37
1,1,1-Trichloroethane	ND		90	13	ug/m3			07/11/17 20:36	12.37
1,1,2-Trichloroethane	ND		90	24	ug/m3			07/11/17 20:36	12.37
Trichloroethene	**6500**		44	16	ug/m3			07/11/17 20:36	12.37
1,2,3-Trimethylbenzene	ND		81	34	ug/m3			07/11/17 20:36	12.37
1,2,4-Trimethylbenzene	ND		81	25	ug/m3			07/11/17 20:36	12.37

Client Sample Results

Client: Tetra Tech GEO
Project/Site: Lockheed Martin MRAS - BLDG-A/Basement

TestAmerica Job ID: 140-8631-1

Client Sample ID: A-BSMT 50 START

Lab Sample ID: 140-8631-3
Matrix: Air

Date Collected: 07/06/17 12:12
Date Received: 07/07/17 09:40
Sample Container: Summa Canister 1L

Method: TO 15 LL - Volatile Organic Compounds in Ambient Air, Low Concentration (GC/MS) (Continued)

Analyte	Result	Qualifier	RL	MDL	Unit	D	Prepared	Analyzed	Dil Fac
1,3,5-Trimethylbenzene	ND		81	26	ug/m3			07/11/17 20:36	12.37
Vinyl chloride	ND		21	15	ug/m3			07/11/17 20:36	12.37
Xylenes, Total	ND		140	21	ug/m3			07/11/17 20:36	12.37

Surrogate	*%Recovery*	*Qualifier*	*Limits*	*Prepared*	*Analyzed*	*Dil Fac*
4-Bromofluorobenzene (Surr)	*97*		*60 - 140*		*07/11/17 20:36*	*12.37*

Client Sample Results

Client: Tetra Tech GEO
Project/Site: Lockheed Martin MRAS - BLDG-A/Basement

TestAmerica Job ID: 140-8631-1

Client Sample ID: A-BSMT 50 END

Lab Sample ID: 140-8631-4

Date Collected: 07/06/17 13:02
Matrix: Air
Date Received: 07/07/17 09:40
Sample Container: Summa Canister 1L

Method: TO 15 LL - Volatile Organic Compounds in Ambient Air, Low Concentration (GC/MS)

Analyte	Result	Qualifier	RL	MDL	Unit	D	Prepared	Analyzed	Dil Fac
Benzene	ND		9.1	2.6	ppb v/v			07/11/17 21:19	3.65
Carbon tetrachloride	ND		9.1	1.7	ppb v/v			07/11/17 21:19	3.65
Chlorodifluoromethane	**2.5**	**J**	9.1	1.7	ppb v/v			07/11/17 21:19	3.65
Chloroform	ND		9.1	1.7	ppb v/v			07/11/17 21:19	3.65
cis-1,2-Dichloroethene	**18**		9.1	2.7	ppb v/v			07/11/17 21:19	3.65
Dichlorodifluoromethane	ND		9.1	3.1	ppb v/v			07/11/17 21:19	3.65
1,1-Dichloroethane	**3.2**	**J**	9.1	1.1	ppb v/v			07/11/17 21:19	3.65
1,2-Dichloroethane	ND		9.1	2.2	ppb v/v			07/11/17 21:19	3.65
1,1-Dichloroethene	**52**		9.1	1.6	ppb v/v			07/11/17 21:19	3.65
Ethylbenzene	ND		9.1	3.1	ppb v/v			07/11/17 21:19	3.65
Methylene Chloride	ND		23	15	ppb v/v			07/11/17 21:19	3.65
Methyl tert-butyl ether	ND		46	7.8	ppb v/v			07/11/17 21:19	3.65
Naphthalene	ND		4.6	4.6	ppb v/v			07/11/17 21:19	3.65
Tetrachloroethene	ND		9.1	1.8	ppb v/v			07/11/17 21:19	3.65
Toluene	ND		14	14	ppb v/v			07/11/17 21:19	3.65
trans-1,2-Dichloroethene	**3.0**	**J**	9.1	2.3	ppb v/v			07/11/17 21:19	3.65
1,2,4-Trichlorobenzene	ND		9.1	4.4	ppb v/v			07/11/17 21:19	3.65
1,1,1-Trichloroethane	**1.5**	**J B**	9.1	1.4	ppb v/v			07/11/17 21:19	3.65
1,1,2-Trichloroethane	ND		9.1	2.4	ppb v/v			07/11/17 21:19	3.65
Trichloroethene	**910**		4.6	1.6	ppb v/v			07/11/17 21:19	3.65
1,2,3-Trimethylbenzene	ND		9.1	3.9	ppb v/v			07/11/17 21:19	3.65
1,2,4-Trimethylbenzene	ND		9.1	2.9	ppb v/v			07/11/17 21:19	3.65
1,3,5-Trimethylbenzene	ND		9.1	3.0	ppb v/v			07/11/17 21:19	3.65
Vinyl chloride	ND		4.6	3.3	ppb v/v			07/11/17 21:19	3.65
Xylenes, Total	ND		18	2.7	ppb v/v			07/11/17 21:19	3.65

Analyte	Result	Qualifier	RL	MDL	Unit	D	Prepared	Analyzed	Dil Fac
Benzene	ND		29	8.4	ug/m3			07/11/17 21:19	3.65
Carbon tetrachloride	ND		57	11	ug/m3			07/11/17 21:19	3.65
Chlorodifluoromethane	**8.9**	**J**	32	6.1	ug/m3			07/11/17 21:19	3.65
Chloroform	ND		45	8.4	ug/m3			07/11/17 21:19	3.65
cis-1,2-Dichloroethene	**73**		36	11	ug/m3			07/11/17 21:19	3.65
Dichlorodifluoromethane	ND		45	15	ug/m3			07/11/17 21:19	3.65
1,1-Dichloroethane	**13**	**J**	37	4.6	ug/m3			07/11/17 21:19	3.65
1,2-Dichloroethane	ND		37	8.8	ug/m3			07/11/17 21:19	3.65
1,1-Dichloroethene	**200**		36	6.3	ug/m3			07/11/17 21:19	3.65
Ethylbenzene	ND		40	13	ug/m3			07/11/17 21:19	3.65
Methylene Chloride	ND		79	52	ug/m3			07/11/17 21:19	3.65
Methyl tert-butyl ether	ND		160	28	ug/m3			07/11/17 21:19	3.65
Naphthalene	ND		24	24	ug/m3			07/11/17 21:19	3.65
Tetrachloroethene	ND		62	12	ug/m3			07/11/17 21:19	3.65
Toluene	ND		52	52	ug/m3			07/11/17 21:19	3.65
trans-1,2-Dichloroethene	**12**	**J**	36	9.0	ug/m3			07/11/17 21:19	3.65
1,2,4-Trichlorobenzene	ND		68	33	ug/m3			07/11/17 21:19	3.65
1,1,1-Trichloroethane	**7.9**	**J B**	50	7.5	ug/m3			07/11/17 21:19	3.65
1,1,2-Trichloroethane	ND		50	13	ug/m3			07/11/17 21:19	3.65
Trichloroethene	**4900**		25	8.6	ug/m3			07/11/17 21:19	3.65
1,2,3-Trimethylbenzene	ND		45	19	ug/m3			07/11/17 21:19	3.65
1,2,4-Trimethylbenzene	ND		45	14	ug/m3			07/11/17 21:19	3.65

Client Sample Results

Client: Tetra Tech GEO
Project/Site: Lockheed Martin MRAS - BLDG-A/Basement

TestAmerica Job ID: 140-8631-1

Client Sample ID: A-BSMT 50 END

Lab Sample ID: 140-8631-4
Matrix: Air

Date Collected: 07/06/17 13:02
Date Received: 07/07/17 09:40
Sample Container: Summa Canister 1L

Method: TO 15 LL - Volatile Organic Compounds in Ambient Air, Low Concentration (GC/MS) (Continued)

Analyte	Result	Qualifier	RL	MDL	Unit	D	Prepared	Analyzed	Dil Fac
1,3,5-Trimethylbenzene	ND		45	15	ug/m3			07/11/17 21:19	3.65
Vinyl chloride	ND		12	8.5	ug/m3			07/11/17 21:19	3.65
Xylenes, Total	ND		79	12	ug/m3			07/11/17 21:19	3.65

Surrogate	*%Recovery*	*Qualifier*	*Limits*	*Prepared*	*Analyzed*	*Dil Fac*
4-Bromofluorobenzene (Surr)	*97*		*60 - 140*		*07/11/17 21:19*	*3.65*

Default Detection Limits

Client: Tetra Tech GEO
Project/Site: Lockheed Martin MRAS - BLDG-A/Basement

TestAmerica Job ID: 140-8631-1

Method: TO 15 LL - Volatile Organic Compounds in Ambient Air, Low Concentration (GC/MS)

Analyte	RL	MDL	Units	Method
1,1,1-Trichloroethane	0.080	0.012	ppb v/v	TO 15 LL
1,1,1-Trichloroethane	0.44	0.065	ug/m3	TO 15 LL
1,1,2-Trichloroethane	0.080	0.021	ppb v/v	TO 15 LL
1,1,2-Trichloroethane	0.44	0.11	ug/m3	TO 15 LL
1,1-Dichloroethane	0.080	0.010	ppb v/v	TO 15 LL
1,1-Dichloroethane	0.32	0.040	ug/m3	TO 15 LL
1,1-Dichloroethene	0.080	0.014	ppb v/v	TO 15 LL
1,1-Dichloroethene	0.32	0.056	ug/m3	TO 15 LL
1,2,3-Trimethylbenzene	0.080	0.034	ppb v/v	TO 15 LL
1,2,3-Trimethylbenzene	0.39	0.17	ug/m3	TO 15 LL
1,2,4-Trichlorobenzene	0.080	0.039	ppb v/v	TO 15 LL
1,2,4-Trichlorobenzene	0.59	0.29	ug/m3	TO 15 LL
1,2,4-Trimethylbenzene	0.080	0.025	ppb v/v	TO 15 LL
1,2,4-Trimethylbenzene	0.39	0.12	ug/m3	TO 15 LL
1,2-Dichloroethane	0.080	0.019	ppb v/v	TO 15 LL
1,2-Dichloroethane	0.32	0.077	ug/m3	TO 15 LL
1,3,5-Trimethylbenzene	0.080	0.026	ppb v/v	TO 15 LL
1,3,5-Trimethylbenzene	0.39	0.13	ug/m3	TO 15 LL
Benzene	0.080	0.023	ppb v/v	TO 15 LL
Benzene	0.26	0.073	ug/m3	TO 15 LL
Carbon tetrachloride	0.080	0.015	ppb v/v	TO 15 LL
Carbon tetrachloride	0.50	0.094	ug/m3	TO 15 LL
Chlorodifluoromethane	0.080	0.015	ppb v/v	TO 15 LL
Chlorodifluoromethane	0.28	0.053	ug/m3	TO 15 LL
Chloroform	0.080	0.015	ppb v/v	TO 15 LL
Chloroform	0.39	0.073	ug/m3	TO 15 LL
cis-1,2-Dichloroethene	0.080	0.024	ppb v/v	TO 15 LL
cis-1,2-Dichloroethene	0.32	0.095	ug/m3	TO 15 LL
Dichlorodifluoromethane	0.080	0.027	ppb v/v	TO 15 LL
Dichlorodifluoromethane	0.40	0.13	ug/m3	TO 15 LL
Ethylbenzene	0.080	0.027	ppb v/v	TO 15 LL
Ethylbenzene	0.35	0.12	ug/m3	TO 15 LL
Methyl tert-butyl ether	0.40	0.068	ppb v/v	TO 15 LL
Methyl tert-butyl ether	1.4	0.25	ug/m3	TO 15 LL
Methylene Chloride	0.20	0.13	ppb v/v	TO 15 LL
Methylene Chloride	0.69	0.45	ug/m3	TO 15 LL
Naphthalene	0.040	0.040	ppb v/v	TO 15 LL
Naphthalene	0.21	0.21	ug/m3	TO 15 LL
Tetrachloroethene	0.080	0.016	ppb v/v	TO 15 LL
Tetrachloroethene	0.54	0.11	ug/m3	TO 15 LL
Toluene	0.12	0.12	ppb v/v	TO 15 LL
Toluene	0.45	0.45	ug/m3	TO 15 LL
trans-1,2-Dichloroethene	0.080	0.020	ppb v/v	TO 15 LL
trans-1,2-Dichloroethene	0.32	0.079	ug/m3	TO 15 LL
Trichloroethene	0.040	0.014	ppb v/v	TO 15 LL
Trichloroethene	0.21	0.075	ug/m3	TO 15 LL
Vinyl chloride	0.040	0.029	ppb v/v	TO 15 LL
Vinyl chloride	0.10	0.074	ug/m3	TO 15 LL
Xylenes, Total	0.16	0.024	ppb v/v	TO 15 LL
Xylenes, Total	0.69	0.10	ug/m3	TO 15 LL

Surrogate Summary

Client: Tetra Tech GEO
Project/Site: Lockheed Martin MRAS - BLDG-A/Basement

TestAmerica Job ID: 140-8631-1

Method: TO 15 LL - Volatile Organic Compounds in Ambient Air, Low Concentration (GC/MS)

Matrix: Air **Prep Type: Total/NA**

		Percent Surrogate Recovery (Acceptance Limits)							
Lab Sample ID	**Client Sample ID**	**BFB (60-140)**							
140-8631-1	A-BSMT 25 START	100							
140-8631-2	A-BSMT 25 END	96							
140-8631-3	A-BSMT 50 START	97							
140-8631-4	A-BSMT 50 END	97							
LCS 140-12612/1002	Lab Control Sample	105							
MB 140-12612/4	Method Blank	99							

Surrogate Legend

BFB = 4-Bromofluorobenzene (Surr)

Method: TO 15 LL - Volatile Organic Compounds in Ambient Air, Low Concentration (GC/MS)

Lab Sample ID: MB 140-12612/4
Matrix: Air
Analysis Batch: 12612

Client Sample ID: Method Blank
Prep Type: Total/NA

Analyte	MB Result	MB Qualifier	RL	MDL	Unit	D	Prepared	Analyzed	Dil Fac
Benzene	ND		0.080	0.023	ppb v/v			07/11/17 11:20	1
Carbon tetrachloride	ND		0.080	0.015	ppb v/v			07/11/17 11:20	1
Chlorodifluoromethane	ND		0.080	0.015	ppb v/v			07/11/17 11:20	1
Chloroform	ND		0.080	0.015	ppb v/v			07/11/17 11:20	1
cis-1,2-Dichloroethene	ND		0.080	0.024	ppb v/v			07/11/17 11:20	1
Dichlorodifluoromethane	ND		0.080	0.027	ppb v/v			07/11/17 11:20	1
1,1-Dichloroethane	ND		0.080	0.010	ppb v/v			07/11/17 11:20	1
1,2-Dichloroethane	ND		0.080	0.019	ppb v/v			07/11/17 11:20	1
1,1-Dichloroethene	ND		0.080	0.014	ppb v/v			07/11/17 11:20	1
Ethylbenzene	ND		0.080	0.027	ppb v/v			07/11/17 11:20	1
Methylene Chloride	ND		0.20	0.13	ppb v/v			07/11/17 11:20	1
Methyl tert-butyl ether	ND		0.40	0.068	ppb v/v			07/11/17 11:20	1
Naphthalene	ND		0.040	0.040	ppb v/v			07/11/17 11:20	1
Tetrachloroethene	ND		0.080	0.016	ppb v/v			07/11/17 11:20	1
Toluene	ND		0.12	0.12	ppb v/v			07/11/17 11:20	1
trans-1,2-Dichloroethene	ND		0.080	0.020	ppb v/v			07/11/17 11:20	1
1,2,4-Trichlorobenzene	ND		0.080	0.039	ppb v/v			07/11/17 11:20	1
1,1,1-Trichloroethane	0.0169	J	0.080	0.012	ppb v/v			07/11/17 11:20	1
1,1,2-Trichloroethane	ND		0.080	0.021	ppb v/v			07/11/17 11:20	1
Trichloroethene	ND		0.040	0.014	ppb v/v			07/11/17 11:20	1
1,2,3-Trimethylbenzene	ND		0.080	0.034	ppb v/v			07/11/17 11:20	1
1,2,4-Trimethylbenzene	ND		0.080	0.025	ppb v/v			07/11/17 11:20	1
1,3,5-Trimethylbenzene	ND		0.080	0.026	ppb v/v			07/11/17 11:20	1
Vinyl chloride	ND		0.040	0.029	ppb v/v			07/11/17 11:20	1
Xylenes, Total	ND		0.16	0.024	ppb v/v			07/11/17 11:20	1

Analyte	MB Result	MB Qualifier	RL	MDL	Unit	D	Prepared	Analyzed	Dil Fac
Benzene	ND		0.26	0.073	ug/m3			07/11/17 11:20	1
Carbon tetrachloride	ND		0.50	0.094	ug/m3			07/11/17 11:20	1
Chlorodifluoromethane	ND		0.28	0.053	ug/m3			07/11/17 11:20	1
Chloroform	ND		0.39	0.073	ug/m3			07/11/17 11:20	1
cis-1,2-Dichloroethene	ND		0.32	0.095	ug/m3			07/11/17 11:20	1
Dichlorodifluoromethane	ND		0.40	0.13	ug/m3			07/11/17 11:20	1
1,1-Dichloroethane	ND		0.32	0.040	ug/m3			07/11/17 11:20	1
1,2-Dichloroethane	ND		0.32	0.077	ug/m3			07/11/17 11:20	1
1,1-Dichloroethene	ND		0.32	0.056	ug/m3			07/11/17 11:20	1
Ethylbenzene	ND		0.35	0.12	ug/m3			07/11/17 11:20	1
Methylene Chloride	ND		0.69	0.45	ug/m3			07/11/17 11:20	1
Methyl tert-butyl ether	ND		1.4	0.25	ug/m3			07/11/17 11:20	1
Naphthalene	ND		0.21	0.21	ug/m3			07/11/17 11:20	1
Tetrachloroethene	ND		0.54	0.11	ug/m3			07/11/17 11:20	1
Toluene	ND		0.45	0.45	ug/m3			07/11/17 11:20	1
trans-1,2-Dichloroethene	ND		0.32	0.079	ug/m3			07/11/17 11:20	1
1,2,4-Trichlorobenzene	ND		0.59	0.29	ug/m3			07/11/17 11:20	1
1,1,1-Trichloroethane	0.0920	J	0.44	0.065	ug/m3			07/11/17 11:20	1
1,1,2-Trichloroethane	ND		0.44	0.11	ug/m3			07/11/17 11:20	1
Trichloroethene	ND		0.21	0.075	ug/m3			07/11/17 11:20	1
1,2,3-Trimethylbenzene	ND		0.39	0.17	ug/m3			07/11/17 11:20	1

Method: TO 15 LL - Volatile Organic Compounds in Ambient Air, Low Concentration (GC/MS) (Continued)

Lab Sample ID: MB 140-12612/4
Matrix: Air
Analysis Batch: 12612

Client Sample ID: Method Blank
Prep Type: Total/NA

Analyte	MB Result	MB Qualifier	RL	MDL	Unit	D	Prepared	Analyzed	Dil Fac
1,2,4-Trimethylbenzene	ND		0.39	0.12	ug/m3			07/11/17 11:20	1
1,3,5-Trimethylbenzene	ND		0.39	0.13	ug/m3			07/11/17 11:20	1
Vinyl chloride	ND		0.10	0.074	ug/m3			07/11/17 11:20	1
Xylenes, Total	ND		0.69	0.10	ug/m3			07/11/17 11:20	1

Surrogate	*MB %Recovery*	*MB Qualifier*	*Limits*	*Prepared*	*Analyzed*	*Dil Fac*
4-Bromofluorobenzene (Surr)	*99*		*60 - 140*		*07/11/17 11:20*	*1*

Lab Sample ID: LCS 140-12612/1002
Matrix: Air
Analysis Batch: 12612

Client Sample ID: Lab Control Sample
Prep Type: Total/NA

Analyte	Spike Added	LCS Result	LCS Qualifier	Unit	D	%Rec	%Rec. Limits
Benzene	2.00	2.09		ppb v/v		104	70 - 130
Carbon tetrachloride	2.00	2.09		ppb v/v		105	70 - 130
Chlorodifluoromethane	2.00	1.82		ppb v/v		91	60 - 140
Chloroform	2.00	2.14		ppb v/v		107	70 - 130
cis-1,2-Dichloroethene	2.00	2.00		ppb v/v		100	70 - 130
Dichlorodifluoromethane	2.00	1.84		ppb v/v		92	60 - 140
1,1-Dichloroethane	2.00	2.20		ppb v/v		110	70 - 130
1,2-Dichloroethane	2.00	2.06		ppb v/v		103	70 - 130
1,1-Dichloroethene	2.00	2.09		ppb v/v		104	70 - 130
Ethylbenzene	2.00	1.89		ppb v/v		95	70 - 130
Methylene Chloride	2.00	2.07		ppb v/v		103	70 - 130
Methyl tert-butyl ether	2.00	2.00		ppb v/v		100	60 - 140
Naphthalene	2.00	1.55		ppb v/v		77	60 - 140
Tetrachloroethene	2.00	1.83		ppb v/v		91	70 - 130
Toluene	2.00	1.89		ppb v/v		94	70 - 130
trans-1,2-Dichloroethene	2.00	1.98		ppb v/v		99	70 - 130
1,2,4-Trichlorobenzene	2.00	1.42		ppb v/v		71	60 - 140
1,1,1-Trichloroethane	2.00	2.03		ppb v/v		101	70 - 130
1,1,2-Trichloroethane	2.00	1.89		ppb v/v		95	70 - 130
Trichloroethene	2.00	1.97		ppb v/v		98	70 - 130
1,2,3-Trimethylbenzene	2.00	1.80		ppb v/v		90	70 - 130
1,2,4-Trimethylbenzene	2.00	1.84		ppb v/v		92	70 - 130
1,3,5-Trimethylbenzene	2.00	1.71		ppb v/v		86	70 - 130
Vinyl chloride	2.00	2.11		ppb v/v		105	70 - 130
Xylenes, Total	6.00	5.62		ppb v/v		94	70 - 130

Analyte	Spike Added	LCS Result	LCS Qualifier	Unit	D	%Rec	%Rec. Limits
Benzene	6.4	6.67		ug/m3		104	70 - 130
Carbon tetrachloride	13	13.2		ug/m3		105	70 - 130
Chlorodifluoromethane	7.1	6.45		ug/m3		91	60 - 140
Chloroform	9.8	10.5		ug/m3		107	70 - 130
cis-1,2-Dichloroethene	7.9	7.94		ug/m3		100	70 - 130
Dichlorodifluoromethane	9.9	9.11		ug/m3		92	60 - 140
1,1-Dichloroethane	8.1	8.91		ug/m3		110	70 - 130

Method: TO 15 LL - Volatile Organic Compounds in Ambient Air, Low Concentration (GC/MS) (Continued)

Lab Sample ID: LCS 140-12612/1002
Matrix: Air
Analysis Batch: 12612

Client Sample ID: Lab Control Sample
Prep Type: Total/NA

Analyte	Spike Added	LCS Result	LCS Qualifier	Unit	D	%Rec	%Rec. Limits
1,2-Dichloroethane	8.1	8.35		ug/m3		103	70 - 130
1,1-Dichloroethene	7.9	8.28		ug/m3		104	70 - 130
Ethylbenzene	8.7	8.22		ug/m3		95	70 - 130
Methylene Chloride	7.0	7.17		ug/m3		103	70 - 130
Methyl tert-butyl ether	7.2	7.22		ug/m3		100	60 - 140
Naphthalene	10	8.11		ug/m3		77	60 - 140
Tetrachloroethene	14	12.4		ug/m3		91	70 - 130
Toluene	7.5	7.12		ug/m3		94	70 - 130
trans-1,2-Dichloroethene	7.9	7.83		ug/m3		99	70 - 130
1,2,4-Trichlorobenzene	15	10.5		ug/m3		71	60 - 140
1,1,1-Trichloroethane	11	11.1		ug/m3		101	70 - 130
1,1,2-Trichloroethane	11	10.3		ug/m3		95	70 - 130
Trichloroethene	11	10.6		ug/m3		98	70 - 130
1,2,3-Trimethylbenzene	9.8	8.84		ug/m3		90	70 - 130
1,2,4-Trimethylbenzene	9.8	9.04		ug/m3		92	70 - 130
1,3,5-Trimethylbenzene	9.8	8.42		ug/m3		86	70 - 130
Vinyl chloride	5.1	5.38		ug/m3		105	70 - 130
Xylenes, Total	26	24.4		ug/m3		94	70 - 130

Surrogate	*LCS %Recovery*	*LCS Qualifier*	*Limits*
4-Bromofluorobenzene (Surr)	*105*		*60 - 140*

QC Association Summary

Client: Tetra Tech GEO
Project/Site: Lockheed Martin MRAS - BLDG-A/Basement

TestAmerica Job ID: 140-8631-1

Air - GC/MS VOA

Analysis Batch: 12612

Lab Sample ID	Client Sample ID	Prep Type	Matrix	Method	Prep Batch
140-8631-1	A-BSMT 25 START	Total/NA	Air	TO 15 LL	
140-8631-2	A-BSMT 25 END	Total/NA	Air	TO 15 LL	
140-8631-3	A-BSMT 50 START	Total/NA	Air	TO 15 LL	
140-8631-4	A-BSMT 50 END	Total/NA	Air	TO 15 LL	
MB 140-12612/4	Method Blank	Total/NA	Air	TO 15 LL	
LCS 140-12612/1002	Lab Control Sample	Total/NA	Air	TO 15 LL	

Lab Chronicle

Client: Tetra Tech GEO
Project/Site: Lockheed Martin MRAS - BLDG-A/Basement

TestAmerica Job ID: 140-8631-1

Client Sample ID: A-BSMT 25 START — Lab Sample ID: 140-8631-1

Date Collected: 07/06/17 10:58 — **Matrix: Air**
Date Received: 07/07/17 09:40

Prep Type	Batch Type	Batch Method	Run	Dil Factor	Initial Amount	Final Amount	Batch Number	Prepared or Analyzed	Analyst	Lab
Total/NA	Analysis	TO 15 LL		41.08	15 mL	500 mL	12612	07/11/17 19:09	HMT	TAL KNX
	Instrument ID: MG									

Client Sample ID: A-BSMT 25 END — Lab Sample ID: 140-8631-2

Date Collected: 07/06/17 12:02 — **Matrix: Air**
Date Received: 07/07/17 09:40

Prep Type	Batch Type	Batch Method	Run	Dil Factor	Initial Amount	Final Amount	Batch Number	Prepared or Analyzed	Analyst	Lab
Total/NA	Analysis	TO 15 LL		12.94	25 mL	500 mL	12612	07/11/17 19:51	HMT	TAL KNX
	Instrument ID: MG									

Client Sample ID: A-BSMT 50 START — Lab Sample ID: 140-8631-3

Date Collected: 07/06/17 12:12 — **Matrix: Air**
Date Received: 07/07/17 09:40

Prep Type	Batch Type	Batch Method	Run	Dil Factor	Initial Amount	Final Amount	Batch Number	Prepared or Analyzed	Analyst	Lab
Total/NA	Analysis	TO 15 LL		12.37	30 mL	500 mL	12612	07/11/17 20:36	HMT	TAL KNX
	Instrument ID: MG									

Client Sample ID: A-BSMT 50 END — Lab Sample ID: 140-8631-4

Date Collected: 07/06/17 13:02 — **Matrix: Air**
Date Received: 07/07/17 09:40

Prep Type	Batch Type	Batch Method	Run	Dil Factor	Initial Amount	Final Amount	Batch Number	Prepared or Analyzed	Analyst	Lab
Total/NA	Analysis	TO 15 LL		3.65	16 mL	500 mL	12612	07/11/17 21:19	HMT	TAL KNX
	Instrument ID: MG									

Client Sample ID: Method Blank — Lab Sample ID: MB 140-12612/4

Date Collected: N/A — **Matrix: Air**
Date Received: N/A

Prep Type	Batch Type	Batch Method	Run	Dil Factor	Initial Amount	Final Amount	Batch Number	Prepared or Analyzed	Analyst	Lab
Total/NA	Analysis	TO 15 LL		1	500 mL	500 mL	12612	07/11/17 11:20	HMT	TAL KNX
	Instrument ID: MG									

Client Sample ID: Lab Control Sample — Lab Sample ID: LCS 140-12612/1002

Date Collected: N/A — **Matrix: Air**
Date Received: N/A

Prep Type	Batch Type	Batch Method	Run	Dil Factor	Initial Amount	Final Amount	Batch Number	Prepared or Analyzed	Analyst	Lab
Total/NA	Analysis	TO 15 LL		1	500 mL	500 mL	12612	07/11/17 09:35	HMT	TAL KNX
	Instrument ID: MG									

Lab Chronicle

Client: Tetra Tech GEO
Project/Site: Lockheed Martin MRAS - BLDG-A/Basement

TestAmerica Job ID: 140-8631-1

Laboratory References:

TAL KNX = TestAmerica Knoxville, 5815 Middlebrook Pike, Knoxville, TN 37921, TEL (865)291-3000

Method Summary

Client: Tetra Tech GEO
Project/Site: Lockheed Martin MRAS - BLDG-A/Basement

TestAmerica Job ID: 140-8631-1

Method	Method Description	Protocol	Laboratory
TO 15 LL	Volatile Organic Compounds in Ambient Air, Low Concentration (GC/MS)	EPA	TAL KNX

Protocol References:

EPA = US Environmental Protection Agency

Laboratory References:

TAL KNX = TestAmerica Knoxville, 5815 Middlebrook Pike, Knoxville, TN 37921, TEL (865)291-3000

Sample Summary

Client: Tetra Tech GEO
Project/Site: Lockheed Martin MRAS - BLDG-A/Basement

TestAmerica Job ID: 140-8631-1

Lab Sample ID	Client Sample ID	Matrix	Collected	Received
140-8631-1	A-BSMT 25 START	Air	07/06/17 10:58	07/07/17 09:40
140-8631-2	A-BSMT 25 END	Air	07/06/17 12:02	07/07/17 09:40
140-8631-3	A-BSMT 50 START	Air	07/06/17 12:12	07/07/17 09:40
140-8631-4	A-BSMT 50 END	Air	07/06/17 13:02	07/07/17 09:40

TAL Knoxville
5815 Middlebrook Pike
Knoxville, TN 37921
phone 865-291-3000 fax 865-584-4315

180325
BALTIMORE

Canister Samples Chain of Custody Record

TestAmerica assumes no liability with respect to the collection and shipment of these samples.

TestAmerica
THE LEADER IN ENVIRONMENTAL TESTING

Client Contact Information
Company: ~~Lockheed Martin~~ Tetra Tech
Address: 51 Franklin St
City/State/Zip: Annapolis / MD / 21401
Phone: 410-990-4607
FAX:

Project Name: Lockheed Martin MRAS
Site/location: BLDG-A / Basement
PO # N7-0512124

Project Manager: Peter Rich
Phone: 410-990-4607
Site Contact:
TAL Contact:

Sampled By: J. M. Wilks

140-8631 Chain of Custody

Analysis Turnaround Time
Standard (Specify)
Rush (Specify)

___ of ___ COCs

Sample Identification	Sample Date(s)	Time Start	Time Stop	Canister Vacuum in Field, "Hg (Start)	Canister Vacuum in Field, "Hg (Stop)	Flow Controller ID	Canister ID	TO-15	TO-14A	EPA 3C	EPA 25C	ASTM D-1946	Other (Please specify in notes section)	Sample Type	Indoor Air	Ambient Air	Soil Gas	Landfill Gas	Other (Please specify in notes section)
A-BSMT ~~50~~ START	7-6-17	1055	1058	31	2	11594	11519	✓											
A-BSMT ~~50~~ END	7-6-17	1200	1202	29	0	09899	09667	✓											
A-BSMT 50 START	7-6-17	1210	1212	29	1	10614	09747	✓											
A-BSMT 50 END	7-6-17	~~1255~~ 1300	~~1256~~ 1302	~~29~~ 27	0	10078	11628	✓											

Sampled by :

Temperature (Fahrenheit)	Interior	Ambient	
Start			
Stop			

Pressure (inches of Hg)	Interior	Ambient	
Start			
Stop			

Received @ ambient / Fedex Sotrk# 7795 7297 6509
Custody seal intact
KW 7/7/17

Special Instructions/QC Requirements & Comments:

Canisters Shipped by:	Date/Time:	Canisters Received by:
Samples Relinquished by: J.M. Wilks	Date/Time: 7-6-17 / 1548	Received by:
Relinquished by:	Date/Time: 7-6-2017 / 1600	Received by: 7/7/17 0910

4 cans
4 KR

Loc: 140
8631

TESTAMERICA KNOXVILLE SAMPLE RECEIPT/CONDITION UPON RECEIPT ANOMALY CHECKLIST

Log In Number:

Review Items	Yes	No	NA	If No, what was the problem?
1. Are the shipping containers intact?	/			☐ **Containers, Broken**
2. Were ambient air containers received intact?			/	☑ Checked in lab
3. The coolers/containers custody seal if present, is it intact?	/			☐ Yes ☐ NA
4. Is the cooler temperature within limits? (> freezing temp. of water to 6 °C, VOST: 10°C) Thermometer ID :_____ Correction factor: _____			/	☐ **Cooler Out of Temp, Client Contacted, Proceed/Cancel** ☐ **Cooler Out of Temp, Same Day Receipt**
5. Were all of the sample containers received intact?	/			☐ **Containers, Broken**
6. Were samples received in appropriate containers?	/			☐ **Containers, Improper; Client Contacted; Proceed/Cancel**
7. Do sample container labels match COC? (IDs, Dates, Times)	/			☐ **COC & Samples Do Not Match** ☐ **COC Incorrect/Incomplete** ☐ **COC Not Received**
8. Were all of the samples listed on the COC received?	/			☐ **Sample Received, Not on COC** ☐ **Sample on COC, Not Received**
9. Is the date/time of sample collection noted?	/			☐ **COC; No Date/Time; Client Contacted**
10. Was the sampler identified on the COC?	/			☐ **Sampler Not Listed on COC**
11. Is the client and project name/# identified?	/			☐ **COC Incorrect/Incomplete**
12. Are tests/parameters listed for each sample?	/			☐ **COC No tests on COC**
13. Is the matrix of the samples noted?	/			☐ **COC Incorrect/Incomplete**
14. Was COC relinquished? (Signed/Dated/Timed)	/			☐ **COC Incorrect/Incomplete**
15. Were samples received within holding time?	/			☐ **Holding Time - Receipt**
16. Were samples received with correct chemical preservative (excluding Encore)?			/	☐ **pH Adjusted, pH Included (See box 16A)** ☐ **Incorrect Preservative**
17. Were VOA samples received without headspace?			/	☐ **Headspace (VOA only)**
18. Did you check for residual chlorine, if necessary? (e.g. 1613B, 1668) Chlorine test strip lot number:_____			/	☐ **Residual Chlorine**
19. For 1613B water samples is pH<9?			/	☐ If no, lab will adjust
20. For rad samples was sample activity info. Provided?			/	☐ Project missing info

Comments/Actions Taken

Labeling Verified by: **Date:**

pH test strip lot number:

	Box 16A: pH Preservation	Box 18A: Residual Chlorine
Preservative:		
Lot Number:		
Exp Date:		
Analyst:		
Date:		
Time:		

Project #: 14002921 PM Instructions: _____

Sample Receiving Associate: [signature] Date: 7/7/17

QA026R30.doc, 080916

TestAmerica

THE LEADER IN ENVIRONMENTAL TESTING

ANALYTICAL REPORT

TestAmerica Laboratories, Inc.
TestAmerica Knoxville
5815 Middlebrook Pike
Knoxville, TN 37921
Tel: (865)291-3000

TestAmerica Job ID: 140-8632-1
Client Project/Site: Lockheed Martin MRAS Bldg-A/Dock

For:
Tetra Tech GEO
51 Franklin Street
Suite 400
Annapolis, Maryland 21401

Attn: Peter Rich

Authorized for release by:
7/17/2017 10:42:35 AM

Terry Walker Wasmund, Project Manager II
(865)291-3000
terry.wasmund@testamericainc.com

LINKS

Review your project results through TotalAccess

Have a Question? Ask The Expert

Visit us at: www.testamericainc.com

This report may not be reproduced except in full, and with written approval from the laboratory. For questions please contact the Project Manager at the e-mail address or telephone number listed on this page.

Table of Contents

Cover Page 1
Table of Contents 2
Definitions/Glossary 3
Case Narrative 4
Detection Summary 5
Client Sample Results 9
Default Detection Limits 21
Surrogate Summary 22
QC Sample Results 23
QC Association Summary 29
Lab Chronicle 30
Method Summary 32
Sample Summary 33
Chain of Custody 34

Definitions/Glossary

Client: Tetra Tech GEO
Project/Site: Lockheed Martin MRAS Bldg-A/Dock

TestAmerica Job ID: 140-8632-1

Qualifiers

Air - GC/MS VOA

Qualifier	Qualifier Description
B	Compound was found in the blank and sample.
J	Result is less than the RL but greater than or equal to the MDL and the concentration is an approximate value.

Glossary

Abbreviation	These commonly used abbreviations may or may not be present in this report.
¤	Listed under the "D" column to designate that the result is reported on a dry weight basis
%R	Percent Recovery
CFL	Contains Free Liquid
CNF	Contains No Free Liquid
DER	Duplicate Error Ratio (normalized absolute difference)
Dil Fac	Dilution Factor
DL	Detection Limit (DoD/DOE)
DL, RA, RE, IN	Indicates a Dilution, Re-analysis, Re-extraction, or additional Initial metals/anion analysis of the sample
DLC	Decision Level Concentration (Radiochemistry)
EDL	Estimated Detection Limit (Dioxin)
LOD	Limit of Detection (DoD/DOE)
LOQ	Limit of Quantitation (DoD/DOE)
MDA	Minimum Detectable Activity (Radiochemistry)
MDC	Minimum Detectable Concentration (Radiochemistry)
MDL	Method Detection Limit
ML	Minimum Level (Dioxin)
NC	Not Calculated
ND	Not Detected at the reporting limit (or MDL or EDL if shown)
PQL	Practical Quantitation Limit
QC	Quality Control
RER	Relative Error Ratio (Radiochemistry)
RL	Reporting Limit or Requested Limit (Radiochemistry)
RPD	Relative Percent Difference, a measure of the relative difference between two points
TEF	Toxicity Equivalent Factor (Dioxin)
TEQ	Toxicity Equivalent Quotient (Dioxin)

Job ID: 140-8632-1

Laboratory: TestAmerica Knoxville

Narrative

Job Narrative
140-8632-1

Receipt
The samples were received on 7/7/2017at 9:40 AM. The samples arrived in good condition and properly preserved.

Air - GC/MS VOA
Method(s) D1946, TO 15 LL, TO-15: EPA methods TO-14A and TO-15 specify the use of humidified “zero air” as the blank reagent for canister cleaning, instrument calibration and sample analysis. Ultra-high purity humidified nitrogen from a cryogenic reservoir is used in place of “zero air” by TestAmerica Knoxville.

No additional analytical or quality issues were noted, other than those described above or in the Definitions/Glossary page.

Comments
No additional comments.

Detection Summary

Client: Tetra Tech GEO
Project/Site: Lockheed Martin MRAS Bldg-A/Dock

TestAmerica Job ID: 140-8632-1

Client Sample ID: BLDG-A EFFLUENT — Lab Sample ID: 140-8632-1

Analyte	Result	Qualifier	RL	MDL	Unit	Dil Fac	D	Method	Prep Type
Benzene	0.14	J	0.40	0.12	ppb v/v	1		TO 15 LL	Total/NA
Chlorodifluoromethane	0.99		0.40	0.075	ppb v/v	1		TO 15 LL	Total/NA
Chloroform	0.25	J	0.40	0.075	ppb v/v	1		TO 15 LL	Total/NA
cis-1,2-Dichloroethene	24		0.40	0.12	ppb v/v	1		TO 15 LL	Total/NA
Dichlorodifluoromethane	0.47		0.40	0.14	ppb v/v	1		TO 15 LL	Total/NA
1,1-Dichloroethane	3.3		0.40	0.050	ppb v/v	1		TO 15 LL	Total/NA
1,1-Dichloroethene	20		0.40	0.070	ppb v/v	1		TO 15 LL	Total/NA
Ethylbenzene	0.30	J	0.40	0.14	ppb v/v	1		TO 15 LL	Total/NA
Methylene Chloride	1.1		1.0	0.65	ppb v/v	1		TO 15 LL	Total/NA
Tetrachloroethene	0.12	J	0.40	0.080	ppb v/v	1		TO 15 LL	Total/NA
Toluene	1.4		0.60	0.60	ppb v/v	1		TO 15 LL	Total/NA
trans-1,2-Dichloroethene	0.47		0.40	0.10	ppb v/v	1		TO 15 LL	Total/NA
1,1,1-Trichloroethane	33	B	0.40	0.060	ppb v/v	1		TO 15 LL	Total/NA
Trichloroethene	27		0.20	0.070	ppb v/v	1		TO 15 LL	Total/NA
Vinyl chloride	0.35		0.20	0.15	ppb v/v	1		TO 15 LL	Total/NA
Xylenes, Total	0.95		0.80	0.12	ppb v/v	1		TO 15 LL	Total/NA

Analyte	Result	Qualifier	RL	MDL	Unit	Dil Fac	D	Method	Prep Type
Benzene	0.44	J	1.3	0.37	ug/m3	1		TO 15 LL	Total/NA
Chlorodifluoromethane	3.5		1.4	0.27	ug/m3	1		TO 15 LL	Total/NA
Chloroform	1.2	J	2.0	0.37	ug/m3	1		TO 15 LL	Total/NA
cis-1,2-Dichloroethene	96		1.6	0.48	ug/m3	1		TO 15 LL	Total/NA
Dichlorodifluoromethane	2.3		2.0	0.67	ug/m3	1		TO 15 LL	Total/NA
1,1-Dichloroethane	14		1.6	0.20	ug/m3	1		TO 15 LL	Total/NA
1,1-Dichloroethene	78		1.6	0.28	ug/m3	1		TO 15 LL	Total/NA
Ethylbenzene	1.3	J	1.7	0.59	ug/m3	1		TO 15 LL	Total/NA
Methylene Chloride	3.7		3.5	2.3	ug/m3	1		TO 15 LL	Total/NA
Tetrachloroethene	0.79	J	2.7	0.54	ug/m3	1		TO 15 LL	Total/NA
Toluene	5.3		2.3	2.3	ug/m3	1		TO 15 LL	Total/NA
trans-1,2-Dichloroethene	1.9		1.6	0.40	ug/m3	1		TO 15 LL	Total/NA
1,1,1-Trichloroethane	180	B	2.2	0.33	ug/m3	1		TO 15 LL	Total/NA
Trichloroethene	150		1.1	0.38	ug/m3	1		TO 15 LL	Total/NA
Vinyl chloride	0.89		0.51	0.37	ug/m3	1		TO 15 LL	Total/NA
Xylenes, Total	4.1		3.5	0.52	ug/m3	1		TO 15 LL	Total/NA

Client Sample ID: BLDG-A MID-GAC — Lab Sample ID: 140-8632-2

Analyte	Result	Qualifier	RL	MDL	Unit	Dil Fac	D	Method	Prep Type
Chlorodifluoromethane	1.1		0.40	0.075	ppb v/v	1		TO 15 LL	Total/NA
Chloroform	0.23	J	0.40	0.075	ppb v/v	1		TO 15 LL	Total/NA
cis-1,2-Dichloroethene	17		0.40	0.12	ppb v/v	1		TO 15 LL	Total/NA
Dichlorodifluoromethane	0.48		0.40	0.14	ppb v/v	1		TO 15 LL	Total/NA
1,1-Dichloroethane	2.5		0.40	0.050	ppb v/v	1		TO 15 LL	Total/NA
1,1-Dichloroethene	19		0.40	0.070	ppb v/v	1		TO 15 LL	Total/NA
Ethylbenzene	0.26	J	0.40	0.14	ppb v/v	1		TO 15 LL	Total/NA
Methylene Chloride	0.96	J	1.0	0.65	ppb v/v	1		TO 15 LL	Total/NA
Toluene	1.3		0.60	0.60	ppb v/v	1		TO 15 LL	Total/NA
trans-1,2-Dichloroethene	0.33	J	0.40	0.10	ppb v/v	1		TO 15 LL	Total/NA
1,1,1-Trichloroethane	10	B	0.40	0.060	ppb v/v	1		TO 15 LL	Total/NA
Trichloroethene	0.18	J	0.20	0.070	ppb v/v	1		TO 15 LL	Total/NA
Xylenes, Total	0.79	J	0.80	0.12	ppb v/v	1		TO 15 LL	Total/NA

This Detection Summary does not include radiochemical test results.

Detection Summary

Client: Tetra Tech GEO
Project/Site: Lockheed Martin MRAS Bldg-A/Dock

TestAmerica Job ID: 140-8632-1

Client Sample ID: BLDG-A MID-GAC (Continued) — Lab Sample ID: 140-8632-2

Analyte	Result	Qualifier	RL	MDL	Unit	Dil Fac	D	Method	Prep Type
Chlorodifluoromethane	3.8		1.4	0.27	ug/m3	1		TO 15 LL	Total/NA
Chloroform	1.1	J	2.0	0.37	ug/m3	1		TO 15 LL	Total/NA
cis-1,2-Dichloroethene	67		1.6	0.48	ug/m3	1		TO 15 LL	Total/NA
Dichlorodifluoromethane	2.4		2.0	0.67	ug/m3	1		TO 15 LL	Total/NA
1,1-Dichloroethane	10		1.6	0.20	ug/m3	1		TO 15 LL	Total/NA
1,1-Dichloroethene	76		1.6	0.28	ug/m3	1		TO 15 LL	Total/NA
Ethylbenzene	1.1	J	1.7	0.59	ug/m3	1		TO 15 LL	Total/NA
Methylene Chloride	3.3	J	3.5	2.3	ug/m3	1		TO 15 LL	Total/NA
Toluene	4.8		2.3	2.3	ug/m3	1		TO 15 LL	Total/NA
trans-1,2-Dichloroethene	1.3	J	1.6	0.40	ug/m3	1		TO 15 LL	Total/NA
1,1,1-Trichloroethane	57	B	2.2	0.33	ug/m3	1		TO 15 LL	Total/NA
Trichloroethene	0.95	J	1.1	0.38	ug/m3	1		TO 15 LL	Total/NA
Xylenes, Total	3.4	J	3.5	0.52	ug/m3	1		TO 15 LL	Total/NA

Client Sample ID: BLDG-A INFLUENT — Lab Sample ID: 140-8632-3

Analyte	Result	Qualifier	RL	MDL	Unit	Dil Fac	D	Method	Prep Type
Benzene	8.0		4.0	1.2	ppb v/v	1		TO 15 LL	Total/NA
Chlorodifluoromethane	2.0	J	4.0	0.75	ppb v/v	1		TO 15 LL	Total/NA
cis-1,2-Dichloroethene	24		4.0	1.2	ppb v/v	1		TO 15 LL	Total/NA
1,1-Dichloroethane	4.9		4.0	0.50	ppb v/v	1		TO 15 LL	Total/NA
1,1-Dichloroethene	31		4.0	0.70	ppb v/v	1		TO 15 LL	Total/NA
trans-1,2-Dichloroethene	1.2	J	4.0	1.0	ppb v/v	1		TO 15 LL	Total/NA
1,1,1-Trichloroethane	82	B	4.0	0.60	ppb v/v	1		TO 15 LL	Total/NA
Trichloroethene	250		2.0	0.70	ppb v/v	1		TO 15 LL	Total/NA

Analyte	Result	Qualifier	RL	MDL	Unit	Dil Fac	D	Method	Prep Type
Benzene	25		13	3.7	ug/m3	1		TO 15 LL	Total/NA
Chlorodifluoromethane	7.2	J	14	2.7	ug/m3	1		TO 15 LL	Total/NA
cis-1,2-Dichloroethene	94		16	4.8	ug/m3	1		TO 15 LL	Total/NA
1,1-Dichloroethane	20		16	2.0	ug/m3	1		TO 15 LL	Total/NA
1,1-Dichloroethene	120		16	2.8	ug/m3	1		TO 15 LL	Total/NA
trans-1,2-Dichloroethene	4.6	J	16	4.0	ug/m3	1		TO 15 LL	Total/NA
1,1,1-Trichloroethane	450	B	22	3.3	ug/m3	1		TO 15 LL	Total/NA
Trichloroethene	1400		11	3.8	ug/m3	1		TO 15 LL	Total/NA

Client Sample ID: BLDG-C EFFLUENT — Lab Sample ID: 140-8632-4

Analyte	Result	Qualifier	RL	MDL	Unit	Dil Fac	D	Method	Prep Type
Benzene	2.0		0.40	0.12	ppb v/v	1		TO 15 LL	Total/NA
Chlorodifluoromethane	3.9		0.40	0.075	ppb v/v	1		TO 15 LL	Total/NA
Chloroform	0.19	J	0.40	0.075	ppb v/v	1		TO 15 LL	Total/NA
cis-1,2-Dichloroethene	0.21	J	0.40	0.12	ppb v/v	1		TO 15 LL	Total/NA
Dichlorodifluoromethane	0.42		0.40	0.14	ppb v/v	1		TO 15 LL	Total/NA
1,1-Dichloroethane	0.19	J	0.40	0.050	ppb v/v	1		TO 15 LL	Total/NA
Ethylbenzene	0.27	J	0.40	0.14	ppb v/v	1		TO 15 LL	Total/NA
Methylene Chloride	1.3		1.0	0.65	ppb v/v	1		TO 15 LL	Total/NA
Tetrachloroethene	0.094	J	0.40	0.080	ppb v/v	1		TO 15 LL	Total/NA
Toluene	1.7		0.60	0.60	ppb v/v	1		TO 15 LL	Total/NA
1,1,1-Trichloroethane	0.36	J B	0.40	0.060	ppb v/v	1		TO 15 LL	Total/NA
Trichloroethene	0.079	J	0.20	0.070	ppb v/v	1		TO 15 LL	Total/NA

This Detection Summary does not include radiochemical test results.

Detection Summary

Client: Tetra Tech GEO
Project/Site: Lockheed Martin MRAS Bldg-A/Dock

TestAmerica Job ID: 140-8632-1

Client Sample ID: BLDG-C EFFLUENT (Continued) — Lab Sample ID: 140-8632-4

Analyte	Result	Qualifier	RL	MDL	Unit	Dil Fac	D	Method	Prep Type
1,2,3-Trimethylbenzene	0.17	J	0.40	0.17	ppb v/v	1		TO 15 LL	Total/NA
1,2,4-Trimethylbenzene	0.76		0.40	0.13	ppb v/v	1		TO 15 LL	Total/NA
1,3,5-Trimethylbenzene	0.29	J	0.40	0.13	ppb v/v	1		TO 15 LL	Total/NA
Xylenes, Total	0.80		0.80	0.12	ppb v/v	1		TO 15 LL	Total/NA

Analyte	Result	Qualifier	RL	MDL	Unit	Dil Fac	D	Method	Prep Type
Benzene	6.3		1.3	0.37	ug/m3	1		TO 15 LL	Total/NA
Chlorodifluoromethane	14		1.4	0.27	ug/m3	1		TO 15 LL	Total/NA
Chloroform	0.92	J	2.0	0.37	ug/m3	1		TO 15 LL	Total/NA
cis-1,2-Dichloroethene	0.85	J	1.6	0.48	ug/m3	1		TO 15 LL	Total/NA
Dichlorodifluoromethane	2.1		2.0	0.67	ug/m3	1		TO 15 LL	Total/NA
1,1-Dichloroethane	0.75	J	1.6	0.20	ug/m3	1		TO 15 LL	Total/NA
Ethylbenzene	1.2	J	1.7	0.59	ug/m3	1		TO 15 LL	Total/NA
Methylene Chloride	4.6		3.5	2.3	ug/m3	1		TO 15 LL	Total/NA
Tetrachloroethene	0.64	J	2.7	0.54	ug/m3	1		TO 15 LL	Total/NA
Toluene	6.4		2.3	2.3	ug/m3	1		TO 15 LL	Total/NA
1,1,1-Trichloroethane	2.0	J B	2.2	0.33	ug/m3	1		TO 15 LL	Total/NA
Trichloroethene	0.43	J	1.1	0.38	ug/m3	1		TO 15 LL	Total/NA
1,2,3-Trimethylbenzene	0.84	J	2.0	0.84	ug/m3	1		TO 15 LL	Total/NA
1,2,4-Trimethylbenzene	3.7		2.0	0.61	ug/m3	1		TO 15 LL	Total/NA
1,3,5-Trimethylbenzene	1.4	J	2.0	0.64	ug/m3	1		TO 15 LL	Total/NA
Xylenes, Total	3.5		3.5	0.52	ug/m3	1		TO 15 LL	Total/NA

Client Sample ID: BLDG-C MID-GAC — Lab Sample ID: 140-8632-5

Analyte	Result	Qualifier	RL	MDL	Unit	Dil Fac	D	Method	Prep Type
Benzene	2.6		0.40	0.12	ppb v/v	1		TO 15 LL	Total/NA
Chlorodifluoromethane	5.1		0.40	0.075	ppb v/v	1		TO 15 LL	Total/NA
Chloroform	0.21	J	0.40	0.075	ppb v/v	1		TO 15 LL	Total/NA
cis-1,2-Dichloroethene	1.4		0.40	0.12	ppb v/v	1		TO 15 LL	Total/NA
Dichlorodifluoromethane	0.46		0.40	0.14	ppb v/v	1		TO 15 LL	Total/NA
1,1-Dichloroethane	0.12	J	0.40	0.050	ppb v/v	1		TO 15 LL	Total/NA
Ethylbenzene	0.36	J	0.40	0.14	ppb v/v	1		TO 15 LL	Total/NA
Methylene Chloride	1.7		1.0	0.65	ppb v/v	1		TO 15 LL	Total/NA
Tetrachloroethene	0.32	J	0.40	0.080	ppb v/v	1		TO 15 LL	Total/NA
Toluene	1.6		0.60	0.60	ppb v/v	1		TO 15 LL	Total/NA
trans-1,2-Dichloroethene	0.12	J	0.40	0.10	ppb v/v	1		TO 15 LL	Total/NA
1,1,1-Trichloroethane	1.1	B	0.40	0.060	ppb v/v	1		TO 15 LL	Total/NA
Trichloroethene	0.13	J	0.20	0.070	ppb v/v	1		TO 15 LL	Total/NA
1,2,4-Trimethylbenzene	0.16	J	0.40	0.13	ppb v/v	1		TO 15 LL	Total/NA
Xylenes, Total	0.98		0.80	0.12	ppb v/v	1		TO 15 LL	Total/NA

Analyte	Result	Qualifier	RL	MDL	Unit	Dil Fac	D	Method	Prep Type
Benzene	8.4		1.3	0.37	ug/m3	1		TO 15 LL	Total/NA
Chlorodifluoromethane	18		1.4	0.27	ug/m3	1		TO 15 LL	Total/NA
Chloroform	1.0	J	2.0	0.37	ug/m3	1		TO 15 LL	Total/NA
cis-1,2-Dichloroethene	5.7		1.6	0.48	ug/m3	1		TO 15 LL	Total/NA
Dichlorodifluoromethane	2.3		2.0	0.67	ug/m3	1		TO 15 LL	Total/NA
1,1-Dichloroethane	0.49	J	1.6	0.20	ug/m3	1		TO 15 LL	Total/NA
Ethylbenzene	1.6	J	1.7	0.59	ug/m3	1		TO 15 LL	Total/NA
Methylene Chloride	5.9		3.5	2.3	ug/m3	1		TO 15 LL	Total/NA
Tetrachloroethene	2.2	J	2.7	0.54	ug/m3	1		TO 15 LL	Total/NA

This Detection Summary does not include radiochemical test results.

Detection Summary

Client: Tetra Tech GEO
Project/Site: Lockheed Martin MRAS Bldg-A/Dock

TestAmerica Job ID: 140-8632-1

Client Sample ID: BLDG-C MID-GAC (Continued) — Lab Sample ID: 140-8632-5

Analyte	Result	Qualifier	RL	MDL	Unit	Dil Fac	D	Method	Prep Type
Toluene	6.2		2.3	2.3	ug/m3	1		TO 15 LL	Total/NA
trans-1,2-Dichloroethene	0.47	J	1.6	0.40	ug/m3	1		TO 15 LL	Total/NA
1,1,1-Trichloroethane	6.0	B	2.2	0.33	ug/m3	1		TO 15 LL	Total/NA
Trichloroethene	0.68	J	1.1	0.38	ug/m3	1		TO 15 LL	Total/NA
1,2,4-Trimethylbenzene	0.79	J	2.0	0.61	ug/m3	1		TO 15 LL	Total/NA
Xylenes, Total	4.3		3.5	0.52	ug/m3	1		TO 15 LL	Total/NA

Client Sample ID: BLDG-C INFLUENT — Lab Sample ID: 140-8632-6

Analyte	Result	Qualifier	RL	MDL	Unit	Dil Fac	D	Method	Prep Type
Benzene	1.9		0.40	0.12	ppb v/v	1		TO 15 LL	Total/NA
Carbon tetrachloride	0.12	J	0.40	0.075	ppb v/v	1		TO 15 LL	Total/NA
Chlorodifluoromethane	4.3		0.40	0.075	ppb v/v	1		TO 15 LL	Total/NA
Chloroform	0.60		0.40	0.075	ppb v/v	1		TO 15 LL	Total/NA
cis-1,2-Dichloroethene	1.4		0.40	0.12	ppb v/v	1		TO 15 LL	Total/NA
Dichlorodifluoromethane	0.38	J	0.40	0.14	ppb v/v	1		TO 15 LL	Total/NA
1,1-Dichloroethane	0.10	J	0.40	0.050	ppb v/v	1		TO 15 LL	Total/NA
Ethylbenzene	0.43		0.40	0.14	ppb v/v	1		TO 15 LL	Total/NA
Methylene Chloride	1.5		1.0	0.65	ppb v/v	1		TO 15 LL	Total/NA
Naphthalene	0.38		0.20	0.20	ppb v/v	1		TO 15 LL	Total/NA
Tetrachloroethene	0.21	J	0.40	0.080	ppb v/v	1		TO 15 LL	Total/NA
Toluene	1.9		0.60	0.60	ppb v/v	1		TO 15 LL	Total/NA
1,1,1-Trichloroethane	0.21	J B	0.40	0.060	ppb v/v	1		TO 15 LL	Total/NA
Trichloroethene	5.8		0.20	0.070	ppb v/v	1		TO 15 LL	Total/NA
1,2,4-Trimethylbenzene	0.51		0.40	0.13	ppb v/v	1		TO 15 LL	Total/NA
1,3,5-Trimethylbenzene	0.19	J	0.40	0.13	ppb v/v	1		TO 15 LL	Total/NA
Xylenes, Total	1.6		0.80	0.12	ppb v/v	1		TO 15 LL	Total/NA

Analyte	Result	Qualifier	RL	MDL	Unit	Dil Fac	D	Method	Prep Type
Benzene	6.1		1.3	0.37	ug/m3	1		TO 15 LL	Total/NA
Carbon tetrachloride	0.76	J	2.5	0.47	ug/m3	1		TO 15 LL	Total/NA
Chlorodifluoromethane	15		1.4	0.27	ug/m3	1		TO 15 LL	Total/NA
Chloroform	2.9		2.0	0.37	ug/m3	1		TO 15 LL	Total/NA
cis-1,2-Dichloroethene	5.4		1.6	0.48	ug/m3	1		TO 15 LL	Total/NA
Dichlorodifluoromethane	1.9	J	2.0	0.67	ug/m3	1		TO 15 LL	Total/NA
1,1-Dichloroethane	0.42	J	1.6	0.20	ug/m3	1		TO 15 LL	Total/NA
Ethylbenzene	1.9		1.7	0.59	ug/m3	1		TO 15 LL	Total/NA
Methylene Chloride	5.4		3.5	2.3	ug/m3	1		TO 15 LL	Total/NA
Naphthalene	2.0		1.0	1.0	ug/m3	1		TO 15 LL	Total/NA
Tetrachloroethene	1.4	J	2.7	0.54	ug/m3	1		TO 15 LL	Total/NA
Toluene	7.1		2.3	2.3	ug/m3	1		TO 15 LL	Total/NA
1,1,1-Trichloroethane	1.1	J B	2.2	0.33	ug/m3	1		TO 15 LL	Total/NA
Trichloroethene	31		1.1	0.38	ug/m3	1		TO 15 LL	Total/NA
1,2,4-Trimethylbenzene	2.5		2.0	0.61	ug/m3	1		TO 15 LL	Total/NA
1,3,5-Trimethylbenzene	0.91	J	2.0	0.64	ug/m3	1		TO 15 LL	Total/NA
Xylenes, Total	7.0		3.5	0.52	ug/m3	1		TO 15 LL	Total/NA

This Detection Summary does not include radiochemical test results.

Client Sample Results

Client: Tetra Tech GEO
Project/Site: Lockheed Martin MRAS Bldg-A/Dock

TestAmerica Job ID: 140-8632-1

Client Sample ID: BLDG-A EFFLUENT

Lab Sample ID: 140-8632-1
Matrix: Air

Date Collected: 07/06/17 12:44
Date Received: 07/07/17 09:40
Sample Container: Summa Canister 1L

Method: TO 15 LL - Volatile Organic Compounds in Ambient Air, Low Concentration (GC/MS)

Analyte	Result	Qualifier	RL	MDL	Unit	D	Prepared	Analyzed	Dil Fac
Benzene	**0.14**	**J**	0.40	0.12	ppb v/v			07/12/17 00:08	1
Carbon tetrachloride	ND		0.40	0.075	ppb v/v			07/12/17 00:08	1
Chlorodifluoromethane	**0.99**		0.40	0.075	ppb v/v			07/12/17 00:08	1
Chloroform	**0.25**	**J**	0.40	0.075	ppb v/v			07/12/17 00:08	1
cis-1,2-Dichloroethene	**24**		0.40	0.12	ppb v/v			07/12/17 00:08	1
Dichlorodifluoromethane	**0.47**		0.40	0.14	ppb v/v			07/12/17 00:08	1
1,1-Dichloroethane	**3.3**		0.40	0.050	ppb v/v			07/12/17 00:08	1
1,2-Dichloroethane	ND		0.40	0.095	ppb v/v			07/12/17 00:08	1
1,1-Dichloroethene	**20**		0.40	0.070	ppb v/v			07/12/17 00:08	1
Ethylbenzene	**0.30**	**J**	0.40	0.14	ppb v/v			07/12/17 00:08	1
Methylene Chloride	**1.1**		1.0	0.65	ppb v/v			07/12/17 00:08	1
Methyl tert-butyl ether	ND		2.0	0.34	ppb v/v			07/12/17 00:08	1
Naphthalene	ND		0.20	0.20	ppb v/v			07/12/17 00:08	1
Tetrachloroethene	**0.12**	**J**	0.40	0.080	ppb v/v			07/12/17 00:08	1
Toluene	**1.4**		0.60	0.60	ppb v/v			07/12/17 00:08	1
trans-1,2-Dichloroethene	**0.47**		0.40	0.10	ppb v/v			07/12/17 00:08	1
1,2,4-Trichlorobenzene	ND		0.40	0.20	ppb v/v			07/12/17 00:08	1
1,1,1-Trichloroethane	**33**	**B**	0.40	0.060	ppb v/v			07/12/17 00:08	1
1,1,2-Trichloroethane	ND		0.40	0.11	ppb v/v			07/12/17 00:08	1
Trichloroethene	**27**		0.20	0.070	ppb v/v			07/12/17 00:08	1
1,2,3-Trimethylbenzene	ND		0.40	0.17	ppb v/v			07/12/17 00:08	1
1,2,4-Trimethylbenzene	ND		0.40	0.13	ppb v/v			07/12/17 00:08	1
1,3,5-Trimethylbenzene	ND		0.40	0.13	ppb v/v			07/12/17 00:08	1
Vinyl chloride	**0.35**		0.20	0.15	ppb v/v			07/12/17 00:08	1
Xylenes, Total	**0.95**		0.80	0.12	ppb v/v			07/12/17 00:08	1

Analyte	Result	Qualifier	RL	MDL	Unit	D	Prepared	Analyzed	Dil Fac
Benzene	**0.44**	**J**	1.3	0.37	ug/m3			07/12/17 00:08	1
Carbon tetrachloride	ND		2.5	0.47	ug/m3			07/12/17 00:08	1
Chlorodifluoromethane	**3.5**		1.4	0.27	ug/m3			07/12/17 00:08	1
Chloroform	**1.2**	**J**	2.0	0.37	ug/m3			07/12/17 00:08	1
cis-1,2-Dichloroethene	**96**		1.6	0.48	ug/m3			07/12/17 00:08	1
Dichlorodifluoromethane	**2.3**		2.0	0.67	ug/m3			07/12/17 00:08	1
1,1-Dichloroethane	**14**		1.6	0.20	ug/m3			07/12/17 00:08	1
1,2-Dichloroethane	ND		1.6	0.38	ug/m3			07/12/17 00:08	1
1,1-Dichloroethene	**78**		1.6	0.28	ug/m3			07/12/17 00:08	1
Ethylbenzene	**1.3**	**J**	1.7	0.59	ug/m3			07/12/17 00:08	1
Methylene Chloride	**3.7**		3.5	2.3	ug/m3			07/12/17 00:08	1
Methyl tert-butyl ether	ND		7.2	1.2	ug/m3			07/12/17 00:08	1
Naphthalene	ND		1.0	1.0	ug/m3			07/12/17 00:08	1
Tetrachloroethene	**0.79**	**J**	2.7	0.54	ug/m3			07/12/17 00:08	1
Toluene	**5.3**		2.3	2.3	ug/m3			07/12/17 00:08	1
trans-1,2-Dichloroethene	**1.9**		1.6	0.40	ug/m3			07/12/17 00:08	1
1,2,4-Trichlorobenzene	ND		3.0	1.4	ug/m3			07/12/17 00:08	1
1,1,1-Trichloroethane	**180**	**B**	2.2	0.33	ug/m3			07/12/17 00:08	1
1,1,2-Trichloroethane	ND		2.2	0.57	ug/m3			07/12/17 00:08	1
Trichloroethene	**150**		1.1	0.38	ug/m3			07/12/17 00:08	1
1,2,3-Trimethylbenzene	ND		2.0	0.84	ug/m3			07/12/17 00:08	1
1,2,4-Trimethylbenzene	ND		2.0	0.61	ug/m3			07/12/17 00:08	1

Client Sample Results

Client: Tetra Tech GEO
Project/Site: Lockheed Martin MRAS Bldg-A/Dock

TestAmerica Job ID: 140-8632-1

Client Sample ID: BLDG-A EFFLUENT

Lab Sample ID: 140-8632-1
Matrix: Air

Date Collected: 07/06/17 12:44
Date Received: 07/07/17 09:40
Sample Container: Summa Canister 1L

Method: TO 15 LL - Volatile Organic Compounds in Ambient Air, Low Concentration (GC/MS) (Continued)

Analyte	Result	Qualifier	RL	MDL	Unit	D	Prepared	Analyzed	Dil Fac
1,3,5-Trimethylbenzene	ND		2.0	0.64	ug/m3			07/12/17 00:08	1
Vinyl chloride	**0.89**		0.51	0.37	ug/m3			07/12/17 00:08	1
Xylenes, Total	**4.1**		3.5	0.52	ug/m3			07/12/17 00:08	1

Surrogate	*%Recovery*	*Qualifier*	*Limits*	*Prepared*	*Analyzed*	*Dil Fac*
4-Bromofluorobenzene (Surr)	*102*		*60 - 140*		*07/12/17 00:08*	*1*

Client Sample Results

Client: Tetra Tech GEO
Project/Site: Lockheed Martin MRAS Bldg-A/Dock

TestAmerica Job ID: 140-8632-1

Client Sample ID: BLDG-A MID-GAC

Lab Sample ID: 140-8632-2

Date Collected: 07/06/17 12:53
Matrix: Air
Date Received: 07/07/17 09:40
Sample Container: Summa Canister 1L

Method: TO 15 LL - Volatile Organic Compounds in Ambient Air, Low Concentration (GC/MS)

Analyte	Result	Qualifier	RL	MDL	Unit	D	Prepared	Analyzed	Dil Fac
Benzene	ND		0.40	0.12	ppb v/v			07/12/17 00:53	1
Carbon tetrachloride	ND		0.40	0.075	ppb v/v			07/12/17 00:53	1
Chlorodifluoromethane	**1.1**		0.40	0.075	ppb v/v			07/12/17 00:53	1
Chloroform	**0.23**	**J**	0.40	0.075	ppb v/v			07/12/17 00:53	1
cis-1,2-Dichloroethene	**17**		0.40	0.12	ppb v/v			07/12/17 00:53	1
Dichlorodifluoromethane	**0.48**		0.40	0.14	ppb v/v			07/12/17 00:53	1
1,1-Dichloroethane	**2.5**		0.40	0.050	ppb v/v			07/12/17 00:53	1
1,2-Dichloroethane	ND		0.40	0.095	ppb v/v			07/12/17 00:53	1
1,1-Dichloroethene	**19**		0.40	0.070	ppb v/v			07/12/17 00:53	1
Ethylbenzene	**0.26**	**J**	0.40	0.14	ppb v/v			07/12/17 00:53	1
Methylene Chloride	**0.96**	**J**	1.0	0.65	ppb v/v			07/12/17 00:53	1
Methyl tert-butyl ether	ND		2.0	0.34	ppb v/v			07/12/17 00:53	1
Naphthalene	ND		0.20	0.20	ppb v/v			07/12/17 00:53	1
Tetrachloroethene	ND		0.40	0.080	ppb v/v			07/12/17 00:53	1
Toluene	**1.3**		0.60	0.60	ppb v/v			07/12/17 00:53	1
trans-1,2-Dichloroethene	**0.33**	**J**	0.40	0.10	ppb v/v			07/12/17 00:53	1
1,2,4-Trichlorobenzene	ND		0.40	0.20	ppb v/v			07/12/17 00:53	1
1,1,1-Trichloroethane	**10**	**B**	0.40	0.060	ppb v/v			07/12/17 00:53	1
1,1,2-Trichloroethane	ND		0.40	0.11	ppb v/v			07/12/17 00:53	1
Trichloroethene	**0.18**	**J**	0.20	0.070	ppb v/v			07/12/17 00:53	1
1,2,3-Trimethylbenzene	ND		0.40	0.17	ppb v/v			07/12/17 00:53	1
1,2,4-Trimethylbenzene	ND		0.40	0.13	ppb v/v			07/12/17 00:53	1
1,3,5-Trimethylbenzene	ND		0.40	0.13	ppb v/v			07/12/17 00:53	1
Vinyl chloride	ND		0.20	0.15	ppb v/v			07/12/17 00:53	1
Xylenes, Total	**0.79**	**J**	0.80	0.12	ppb v/v			07/12/17 00:53	1

Analyte	Result	Qualifier	RL	MDL	Unit	D	Prepared	Analyzed	Dil Fac
Benzene	ND		1.3	0.37	ug/m3			07/12/17 00:53	1
Carbon tetrachloride	ND		2.5	0.47	ug/m3			07/12/17 00:53	1
Chlorodifluoromethane	**3.8**		1.4	0.27	ug/m3			07/12/17 00:53	1
Chloroform	**1.1**	**J**	2.0	0.37	ug/m3			07/12/17 00:53	1
cis-1,2-Dichloroethene	**67**		1.6	0.48	ug/m3			07/12/17 00:53	1
Dichlorodifluoromethane	**2.4**		2.0	0.67	ug/m3			07/12/17 00:53	1
1,1-Dichloroethane	**10**		1.6	0.20	ug/m3			07/12/17 00:53	1
1,2-Dichloroethane	ND		1.6	0.38	ug/m3			07/12/17 00:53	1
1,1-Dichloroethene	**76**		1.6	0.28	ug/m3			07/12/17 00:53	1
Ethylbenzene	**1.1**	**J**	1.7	0.59	ug/m3			07/12/17 00:53	1
Methylene Chloride	**3.3**	**J**	3.5	2.3	ug/m3			07/12/17 00:53	1
Methyl tert-butyl ether	ND		7.2	1.2	ug/m3			07/12/17 00:53	1
Naphthalene	ND		1.0	1.0	ug/m3			07/12/17 00:53	1
Tetrachloroethene	ND		2.7	0.54	ug/m3			07/12/17 00:53	1
Toluene	**4.8**		2.3	2.3	ug/m3			07/12/17 00:53	1
trans-1,2-Dichloroethene	**1.3**	**J**	1.6	0.40	ug/m3			07/12/17 00:53	1
1,2,4-Trichlorobenzene	ND		3.0	1.4	ug/m3			07/12/17 00:53	1
1,1,1-Trichloroethane	**57**	**B**	2.2	0.33	ug/m3			07/12/17 00:53	1
1,1,2-Trichloroethane	ND		2.2	0.57	ug/m3			07/12/17 00:53	1
Trichloroethene	**0.95**	**J**	1.1	0.38	ug/m3			07/12/17 00:53	1
1,2,3-Trimethylbenzene	ND		2.0	0.84	ug/m3			07/12/17 00:53	1
1,2,4-Trimethylbenzene	ND		2.0	0.61	ug/m3			07/12/17 00:53	1

Client Sample Results

Client: Tetra Tech GEO
Project/Site: Lockheed Martin MRAS Bldg-A/Dock

TestAmerica Job ID: 140-8632-1

Client Sample ID: BLDG-A MID-GAC

Lab Sample ID: 140-8632-2
Matrix: Air

Date Collected: 07/06/17 12:53
Date Received: 07/07/17 09:40
Sample Container: Summa Canister 1L

Method: TO 15 LL - Volatile Organic Compounds in Ambient Air, Low Concentration (GC/MS) (Continued)

Analyte	Result	Qualifier	RL	MDL	Unit	D	Prepared	Analyzed	Dil Fac
1,3,5-Trimethylbenzene	ND		2.0	0.64	ug/m3			07/12/17 00:53	1
Vinyl chloride	ND		0.51	0.37	ug/m3			07/12/17 00:53	1
Xylenes, Total	**3.4**	**J**	3.5	0.52	ug/m3			07/12/17 00:53	1

Surrogate	*%Recovery*	*Qualifier*	*Limits*	*Prepared*	*Analyzed*	*Dil Fac*
4-Bromofluorobenzene (Surr)	*97*		*60 - 140*		*07/12/17 00:53*	*1*

Client Sample Results

Client: Tetra Tech GEO
Project/Site: Lockheed Martin MRAS Bldg-A/Dock

TestAmerica Job ID: 140-8632-1

Client Sample ID: BLDG-A INFLUENT

Lab Sample ID: 140-8632-3

Date Collected: 07/06/17 12:56
Matrix: Air
Date Received: 07/07/17 09:40
Sample Container: Summa Canister 1L

Method: TO 15 LL - Volatile Organic Compounds in Ambient Air, Low Concentration (GC/MS)

Analyte	Result	Qualifier	RL	MDL	Unit	D	Prepared	Analyzed	Dil Fac
Benzene	**8.0**		4.0	1.2	ppb v/v			07/12/17 01:34	1
Carbon tetrachloride	ND		4.0	0.75	ppb v/v			07/12/17 01:34	1
Chlorodifluoromethane	**2.0**	**J**	4.0	0.75	ppb v/v			07/12/17 01:34	1
Chloroform	ND		4.0	0.75	ppb v/v			07/12/17 01:34	1
cis-1,2-Dichloroethene	**24**		4.0	1.2	ppb v/v			07/12/17 01:34	1
Dichlorodifluoromethane	ND		4.0	1.4	ppb v/v			07/12/17 01:34	1
1,1-Dichloroethane	**4.9**		4.0	0.50	ppb v/v			07/12/17 01:34	1
1,2-Dichloroethane	ND		4.0	0.95	ppb v/v			07/12/17 01:34	1
1,1-Dichloroethene	**31**		4.0	0.70	ppb v/v			07/12/17 01:34	1
Ethylbenzene	ND		4.0	1.4	ppb v/v			07/12/17 01:34	1
Methylene Chloride	ND		10	6.5	ppb v/v			07/12/17 01:34	1
Methyl tert-butyl ether	ND		20	3.4	ppb v/v			07/12/17 01:34	1
Naphthalene	ND		2.0	2.0	ppb v/v			07/12/17 01:34	1
Tetrachloroethene	ND		4.0	0.80	ppb v/v			07/12/17 01:34	1
Toluene	ND		6.0	6.0	ppb v/v			07/12/17 01:34	1
trans-1,2-Dichloroethene	**1.2**	**J**	4.0	1.0	ppb v/v			07/12/17 01:34	1
1,2,4-Trichlorobenzene	ND		4.0	2.0	ppb v/v			07/12/17 01:34	1
1,1,1-Trichloroethane	**82**	**B**	4.0	0.60	ppb v/v			07/12/17 01:34	1
1,1,2-Trichloroethane	ND		4.0	1.1	ppb v/v			07/12/17 01:34	1
Trichloroethene	**250**		2.0	0.70	ppb v/v			07/12/17 01:34	1
1,2,3-Trimethylbenzene	ND		4.0	1.7	ppb v/v			07/12/17 01:34	1
1,2,4-Trimethylbenzene	ND		4.0	1.3	ppb v/v			07/12/17 01:34	1
1,3,5-Trimethylbenzene	ND		4.0	1.3	ppb v/v			07/12/17 01:34	1
Vinyl chloride	ND		2.0	1.5	ppb v/v			07/12/17 01:34	1
Xylenes, Total	ND		8.0	1.2	ppb v/v			07/12/17 01:34	1

Analyte	Result	Qualifier	RL	MDL	Unit	D	Prepared	Analyzed	Dil Fac
Benzene	**25**		13	3.7	ug/m3			07/12/17 01:34	1
Carbon tetrachloride	ND		25	4.7	ug/m3			07/12/17 01:34	1
Chlorodifluoromethane	**7.2**	**J**	14	2.7	ug/m3			07/12/17 01:34	1
Chloroform	ND		20	3.7	ug/m3			07/12/17 01:34	1
cis-1,2-Dichloroethene	**94**		16	4.8	ug/m3			07/12/17 01:34	1
Dichlorodifluoromethane	ND		20	6.7	ug/m3			07/12/17 01:34	1
1,1-Dichloroethane	**20**		16	2.0	ug/m3			07/12/17 01:34	1
1,2-Dichloroethane	ND		16	3.8	ug/m3			07/12/17 01:34	1
1,1-Dichloroethene	**120**		16	2.8	ug/m3			07/12/17 01:34	1
Ethylbenzene	ND		17	5.9	ug/m3			07/12/17 01:34	1
Methylene Chloride	ND		35	23	ug/m3			07/12/17 01:34	1
Methyl tert-butyl ether	ND		72	12	ug/m3			07/12/17 01:34	1
Naphthalene	ND		10	10	ug/m3			07/12/17 01:34	1
Tetrachloroethene	ND		27	5.4	ug/m3			07/12/17 01:34	1
Toluene	ND		23	23	ug/m3			07/12/17 01:34	1
trans-1,2-Dichloroethene	**4.6**	**J**	16	4.0	ug/m3			07/12/17 01:34	1
1,2,4-Trichlorobenzene	ND		30	14	ug/m3			07/12/17 01:34	1
1,1,1-Trichloroethane	**450**	**B**	22	3.3	ug/m3			07/12/17 01:34	1
1,1,2-Trichloroethane	ND		22	5.7	ug/m3			07/12/17 01:34	1
Trichloroethene	**1400**		11	3.8	ug/m3			07/12/17 01:34	1
1,2,3-Trimethylbenzene	ND		20	8.4	ug/m3			07/12/17 01:34	1
1,2,4-Trimethylbenzene	ND		20	6.1	ug/m3			07/12/17 01:34	1

Client Sample Results

Client: Tetra Tech GEO
Project/Site: Lockheed Martin MRAS Bldg-A/Dock

TestAmerica Job ID: 140-8632-1

Client Sample ID: BLDG-A INFLUENT

Lab Sample ID: 140-8632-3
Matrix: Air

Date Collected: 07/06/17 12:56
Date Received: 07/07/17 09:40
Sample Container: Summa Canister 1L

Method: TO 15 LL - Volatile Organic Compounds in Ambient Air, Low Concentration (GC/MS) (Continued)

Analyte	Result	Qualifier	RL	MDL	Unit	D	Prepared	Analyzed	Dil Fac
1,3,5-Trimethylbenzene	ND		20	6.4	ug/m3			07/12/17 01:34	1
Vinyl chloride	ND		5.1	3.7	ug/m3			07/12/17 01:34	1
Xylenes, Total	ND		35	5.2	ug/m3			07/12/17 01:34	1

Surrogate	*%Recovery*	*Qualifier*	*Limits*	*Prepared*	*Analyzed*	*Dil Fac*
4-Bromofluorobenzene (Surr)	*96*		*60 - 140*		*07/12/17 01:34*	*1*

Client Sample Results

Client: Tetra Tech GEO
Project/Site: Lockheed Martin MRAS Bldg-A/Dock

TestAmerica Job ID: 140-8632-1

Client Sample ID: BLDG-C EFFLUENT

Lab Sample ID: 140-8632-4
Matrix: Air

Date Collected: 07/06/17 10:14
Date Received: 07/07/17 09:40
Sample Container: Summa Canister 1L

Method: TO 15 LL - Volatile Organic Compounds in Ambient Air, Low Concentration (GC/MS)

Analyte	Result	Qualifier	RL	MDL	Unit	D	Prepared	Analyzed	Dil Fac
Benzene	**2.0**		0.40	0.12	ppb v/v			07/12/17 02:17	1
Carbon tetrachloride	ND		0.40	0.075	ppb v/v			07/12/17 02:17	1
Chlorodifluoromethane	**3.9**		0.40	0.075	ppb v/v			07/12/17 02:17	1
Chloroform	**0.19**	**J**	0.40	0.075	ppb v/v			07/12/17 02:17	1
cis-1,2-Dichloroethene	**0.21**	**J**	0.40	0.12	ppb v/v			07/12/17 02:17	1
Dichlorodifluoromethane	**0.42**		0.40	0.14	ppb v/v			07/12/17 02:17	1
1,1-Dichloroethane	**0.19**	**J**	0.40	0.050	ppb v/v			07/12/17 02:17	1
1,2-Dichloroethane	ND		0.40	0.095	ppb v/v			07/12/17 02:17	1
1,1-Dichloroethene	ND		0.40	0.070	ppb v/v			07/12/17 02:17	1
Ethylbenzene	**0.27**	**J**	0.40	0.14	ppb v/v			07/12/17 02:17	1
Methylene Chloride	**1.3**		1.0	0.65	ppb v/v			07/12/17 02:17	1
Methyl tert-butyl ether	ND		2.0	0.34	ppb v/v			07/12/17 02:17	1
Naphthalene	ND		0.20	0.20	ppb v/v			07/12/17 02:17	1
Tetrachloroethene	**0.094**	**J**	0.40	0.080	ppb v/v			07/12/17 02:17	1
Toluene	**1.7**		0.60	0.60	ppb v/v			07/12/17 02:17	1
trans-1,2-Dichloroethene	ND		0.40	0.10	ppb v/v			07/12/17 02:17	1
1,2,4-Trichlorobenzene	ND		0.40	0.20	ppb v/v			07/12/17 02:17	1
1,1,1-Trichloroethane	**0.36**	**J B**	0.40	0.060	ppb v/v			07/12/17 02:17	1
1,1,2-Trichloroethane	ND		0.40	0.11	ppb v/v			07/12/17 02:17	1
Trichloroethene	**0.079**	**J**	0.20	0.070	ppb v/v			07/12/17 02:17	1
1,2,3-Trimethylbenzene	**0.17**	**J**	0.40	0.17	ppb v/v			07/12/17 02:17	1
1,2,4-Trimethylbenzene	**0.76**		0.40	0.13	ppb v/v			07/12/17 02:17	1
1,3,5-Trimethylbenzene	**0.29**	**J**	0.40	0.13	ppb v/v			07/12/17 02:17	1
Vinyl chloride	ND		0.20	0.15	ppb v/v			07/12/17 02:17	1
Xylenes, Total	**0.80**		0.80	0.12	ppb v/v			07/12/17 02:17	1

Analyte	Result	Qualifier	RL	MDL	Unit	D	Prepared	Analyzed	Dil Fac
Benzene	**6.3**		1.3	0.37	ug/m3			07/12/17 02:17	1
Carbon tetrachloride	ND		2.5	0.47	ug/m3			07/12/17 02:17	1
Chlorodifluoromethane	**14**		1.4	0.27	ug/m3			07/12/17 02:17	1
Chloroform	**0.92**	**J**	2.0	0.37	ug/m3			07/12/17 02:17	1
cis-1,2-Dichloroethene	**0.85**	**J**	1.6	0.48	ug/m3			07/12/17 02:17	1
Dichlorodifluoromethane	**2.1**		2.0	0.67	ug/m3			07/12/17 02:17	1
1,1-Dichloroethane	**0.75**	**J**	1.6	0.20	ug/m3			07/12/17 02:17	1
1,2-Dichloroethane	ND		1.6	0.38	ug/m3			07/12/17 02:17	1
1,1-Dichloroethene	ND		1.6	0.28	ug/m3			07/12/17 02:17	1
Ethylbenzene	**1.2**	**J**	1.7	0.59	ug/m3			07/12/17 02:17	1
Methylene Chloride	**4.6**		3.5	2.3	ug/m3			07/12/17 02:17	1
Methyl tert-butyl ether	ND		7.2	1.2	ug/m3			07/12/17 02:17	1
Naphthalene	ND		1.0	1.0	ug/m3			07/12/17 02:17	1
Tetrachloroethene	**0.64**	**J**	2.7	0.54	ug/m3			07/12/17 02:17	1
Toluene	**6.4**		2.3	2.3	ug/m3			07/12/17 02:17	1
trans-1,2-Dichloroethene	ND		1.6	0.40	ug/m3			07/12/17 02:17	1
1,2,4-Trichlorobenzene	ND		3.0	1.4	ug/m3			07/12/17 02:17	1
1,1,1-Trichloroethane	**2.0**	**J B**	2.2	0.33	ug/m3			07/12/17 02:17	1
1,1,2-Trichloroethane	ND		2.2	0.57	ug/m3			07/12/17 02:17	1
Trichloroethene	**0.43**	**J**	1.1	0.38	ug/m3			07/12/17 02:17	1
1,2,3-Trimethylbenzene	**0.84**	**J**	2.0	0.84	ug/m3			07/12/17 02:17	1
1,2,4-Trimethylbenzene	**3.7**		2.0	0.61	ug/m3			07/12/17 02:17	1

Client Sample Results

Client: Tetra Tech GEO
Project/Site: Lockheed Martin MRAS Bldg-A/Dock

TestAmerica Job ID: 140-8632-1

Client Sample ID: BLDG-C EFFLUENT

Lab Sample ID: 140-8632-4
Matrix: Air

Date Collected: 07/06/17 10:14
Date Received: 07/07/17 09:40
Sample Container: Summa Canister 1L

Method: TO 15 LL - Volatile Organic Compounds in Ambient Air, Low Concentration (GC/MS) (Continued)

Analyte	Result	Qualifier	RL	MDL	Unit	D	Prepared	Analyzed	Dil Fac
1,3,5-Trimethylbenzene	**1.4**	**J**	2.0	0.64	ug/m3			07/12/17 02:17	1
Vinyl chloride	ND		0.51	0.37	ug/m3			07/12/17 02:17	1
Xylenes, Total	**3.5**		3.5	0.52	ug/m3			07/12/17 02:17	1

Surrogate	*%Recovery*	*Qualifier*	*Limits*	*Prepared*	*Analyzed*	*Dil Fac*
4-Bromofluorobenzene (Surr)	*101*		*60 - 140*		*07/12/17 02:17*	*1*

Client Sample Results

Client: Tetra Tech GEO
Project/Site: Lockheed Martin MRAS Bldg-A/Dock

TestAmerica Job ID: 140-8632-1

Client Sample ID: BLDG-C MID-GAC

Lab Sample ID: 140-8632-5

Date Collected: 07/06/17 10:18
Matrix: Air
Date Received: 07/07/17 09:40
Sample Container: Summa Canister 1L

Method: TO 15 LL - Volatile Organic Compounds in Ambient Air, Low Concentration (GC/MS)

Analyte	Result	Qualifier	RL	MDL	Unit	D	Prepared	Analyzed	Dil Fac
Benzene	**2.6**		0.40	0.12	ppb v/v			07/12/17 02:58	1
Carbon tetrachloride	ND		0.40	0.075	ppb v/v			07/12/17 02:58	1
Chlorodifluoromethane	**5.1**		0.40	0.075	ppb v/v			07/12/17 02:58	1
Chloroform	**0.21**	**J**	0.40	0.075	ppb v/v			07/12/17 02:58	1
cis-1,2-Dichloroethene	**1.4**		0.40	0.12	ppb v/v			07/12/17 02:58	1
Dichlorodifluoromethane	**0.46**		0.40	0.14	ppb v/v			07/12/17 02:58	1
1,1-Dichloroethane	**0.12**	**J**	0.40	0.050	ppb v/v			07/12/17 02:58	1
1,2-Dichloroethane	ND		0.40	0.095	ppb v/v			07/12/17 02:58	1
1,1-Dichloroethene	ND		0.40	0.070	ppb v/v			07/12/17 02:58	1
Ethylbenzene	**0.36**	**J**	0.40	0.14	ppb v/v			07/12/17 02:58	1
Methylene Chloride	**1.7**		1.0	0.65	ppb v/v			07/12/17 02:58	1
Methyl tert-butyl ether	ND		2.0	0.34	ppb v/v			07/12/17 02:58	1
Naphthalene	ND		0.20	0.20	ppb v/v			07/12/17 02:58	1
Tetrachloroethene	**0.32**	**J**	0.40	0.080	ppb v/v			07/12/17 02:58	1
Toluene	**1.6**		0.60	0.60	ppb v/v			07/12/17 02:58	1
trans-1,2-Dichloroethene	**0.12**	**J**	0.40	0.10	ppb v/v			07/12/17 02:58	1
1,2,4-Trichlorobenzene	ND		0.40	0.20	ppb v/v			07/12/17 02:58	1
1,1,1-Trichloroethane	**1.1**	**B**	0.40	0.060	ppb v/v			07/12/17 02:58	1
1,1,2-Trichloroethane	ND		0.40	0.11	ppb v/v			07/12/17 02:58	1
Trichloroethene	**0.13**	**J**	0.20	0.070	ppb v/v			07/12/17 02:58	1
1,2,3-Trimethylbenzene	ND		0.40	0.17	ppb v/v			07/12/17 02:58	1
1,2,4-Trimethylbenzene	**0.16**	**J**	0.40	0.13	ppb v/v			07/12/17 02:58	1
1,3,5-Trimethylbenzene	ND		0.40	0.13	ppb v/v			07/12/17 02:58	1
Vinyl chloride	ND		0.20	0.15	ppb v/v			07/12/17 02:58	1
Xylenes, Total	**0.98**		0.80	0.12	ppb v/v			07/12/17 02:58	1

Analyte	Result	Qualifier	RL	MDL	Unit	D	Prepared	Analyzed	Dil Fac
Benzene	**8.4**		1.3	0.37	ug/m3			07/12/17 02:58	1
Carbon tetrachloride	ND		2.5	0.47	ug/m3			07/12/17 02:58	1
Chlorodifluoromethane	**18**		1.4	0.27	ug/m3			07/12/17 02:58	1
Chloroform	**1.0**	**J**	2.0	0.37	ug/m3			07/12/17 02:58	1
cis-1,2-Dichloroethene	**5.7**		1.6	0.48	ug/m3			07/12/17 02:58	1
Dichlorodifluoromethane	**2.3**		2.0	0.67	ug/m3			07/12/17 02:58	1
1,1-Dichloroethane	**0.49**	**J**	1.6	0.20	ug/m3			07/12/17 02:58	1
1,2-Dichloroethane	ND		1.6	0.38	ug/m3			07/12/17 02:58	1
1,1-Dichloroethene	ND		1.6	0.28	ug/m3			07/12/17 02:58	1
Ethylbenzene	**1.6**	**J**	1.7	0.59	ug/m3			07/12/17 02:58	1
Methylene Chloride	**5.9**		3.5	2.3	ug/m3			07/12/17 02:58	1
Methyl tert-butyl ether	ND		7.2	1.2	ug/m3			07/12/17 02:58	1
Naphthalene	ND		1.0	1.0	ug/m3			07/12/17 02:58	1
Tetrachloroethene	**2.2**	**J**	2.7	0.54	ug/m3			07/12/17 02:58	1
Toluene	**6.2**		2.3	2.3	ug/m3			07/12/17 02:58	1
trans-1,2-Dichloroethene	**0.47**	**J**	1.6	0.40	ug/m3			07/12/17 02:58	1
1,2,4-Trichlorobenzene	ND		3.0	1.4	ug/m3			07/12/17 02:58	1
1,1,1-Trichloroethane	**6.0**	**B**	2.2	0.33	ug/m3			07/12/17 02:58	1
1,1,2-Trichloroethane	ND		2.2	0.57	ug/m3			07/12/17 02:58	1
Trichloroethene	**0.68**	**J**	1.1	0.38	ug/m3			07/12/17 02:58	1
1,2,3-Trimethylbenzene	ND		2.0	0.84	ug/m3			07/12/17 02:58	1
1,2,4-Trimethylbenzene	**0.79**	**J**	2.0	0.61	ug/m3			07/12/17 02:58	1

Client Sample Results

Client: Tetra Tech GEO
Project/Site: Lockheed Martin MRAS Bldg-A/Dock

TestAmerica Job ID: 140-8632-1

Client Sample ID: BLDG-C MID-GAC

Lab Sample ID: 140-8632-5
Matrix: Air

Date Collected: 07/06/17 10:18
Date Received: 07/07/17 09:40
Sample Container: Summa Canister 1L

Method: TO 15 LL - Volatile Organic Compounds in Ambient Air, Low Concentration (GC/MS) (Continued)

Analyte	Result	Qualifier	RL	MDL	Unit	D	Prepared	Analyzed	Dil Fac
1,3,5-Trimethylbenzene	ND		2.0	0.64	ug/m3			07/12/17 02:58	1
Vinyl chloride	ND		0.51	0.37	ug/m3			07/12/17 02:58	1
Xylenes, Total	**4.3**		3.5	0.52	ug/m3			07/12/17 02:58	1

Surrogate	*%Recovery*	*Qualifier*	*Limits*	*Prepared*	*Analyzed*	*Dil Fac*
4-Bromofluorobenzene (Surr)	*99*		*60 - 140*		*07/12/17 02:58*	*1*

Client Sample Results

Client: Tetra Tech GEO
Project/Site: Lockheed Martin MRAS Bldg-A/Dock

TestAmerica Job ID: 140-8632-1

Client Sample ID: BLDG-C INFLUENT

Lab Sample ID: 140-8632-6

Date Collected: 07/06/17 10:22
Matrix: Air
Date Received: 07/07/17 09:40
Sample Container: Summa Canister 1L

Method: TO 15 LL - Volatile Organic Compounds in Ambient Air, Low Concentration (GC/MS)

Analyte	Result	Qualifier	RL	MDL	Unit	D	Prepared	Analyzed	Dil Fac
Benzene	**1.9**		0.40	0.12	ppb v/v			07/12/17 20:17	1
Carbon tetrachloride	**0.12**	**J**	0.40	0.075	ppb v/v			07/12/17 20:17	1
Chlorodifluoromethane	**4.3**		0.40	0.075	ppb v/v			07/12/17 20:17	1
Chloroform	**0.60**		0.40	0.075	ppb v/v			07/12/17 20:17	1
cis-1,2-Dichloroethene	**1.4**		0.40	0.12	ppb v/v			07/12/17 20:17	1
Dichlorodifluoromethane	**0.38**	**J**	0.40	0.14	ppb v/v			07/12/17 20:17	1
1,1-Dichloroethane	**0.10**	**J**	0.40	0.050	ppb v/v			07/12/17 20:17	1
1,2-Dichloroethane	ND		0.40	0.095	ppb v/v			07/12/17 20:17	1
1,1-Dichloroethene	ND		0.40	0.070	ppb v/v			07/12/17 20:17	1
Ethylbenzene	**0.43**		0.40	0.14	ppb v/v			07/12/17 20:17	1
Methylene Chloride	**1.5**		1.0	0.65	ppb v/v			07/12/17 20:17	1
Methyl tert-butyl ether	ND		2.0	0.34	ppb v/v			07/12/17 20:17	1
Naphthalene	**0.38**		0.20	0.20	ppb v/v			07/12/17 20:17	1
Tetrachloroethene	**0.21**	**J**	0.40	0.080	ppb v/v			07/12/17 20:17	1
Toluene	**1.9**		0.60	0.60	ppb v/v			07/12/17 20:17	1
trans-1,2-Dichloroethene	ND		0.40	0.10	ppb v/v			07/12/17 20:17	1
1,2,4-Trichlorobenzene	ND		0.40	0.20	ppb v/v			07/12/17 20:17	1
1,1,1-Trichloroethane	**0.21**	**J B**	0.40	0.060	ppb v/v			07/12/17 20:17	1
1,1,2-Trichloroethane	ND		0.40	0.11	ppb v/v			07/12/17 20:17	1
Trichloroethene	**5.8**		0.20	0.070	ppb v/v			07/12/17 20:17	1
1,2,3-Trimethylbenzene	ND		0.40	0.17	ppb v/v			07/12/17 20:17	1
1,2,4-Trimethylbenzene	**0.51**		0.40	0.13	ppb v/v			07/12/17 20:17	1
1,3,5-Trimethylbenzene	**0.19**	**J**	0.40	0.13	ppb v/v			07/12/17 20:17	1
Vinyl chloride	ND		0.20	0.15	ppb v/v			07/12/17 20:17	1
Xylenes, Total	**1.6**		0.80	0.12	ppb v/v			07/12/17 20:17	1

Analyte	Result	Qualifier	RL	MDL	Unit	D	Prepared	Analyzed	Dil Fac
Benzene	**6.1**		1.3	0.37	ug/m3			07/12/17 20:17	1
Carbon tetrachloride	**0.76**	**J**	2.5	0.47	ug/m3			07/12/17 20:17	1
Chlorodifluoromethane	**15**		1.4	0.27	ug/m3			07/12/17 20:17	1
Chloroform	**2.9**		2.0	0.37	ug/m3			07/12/17 20:17	1
cis-1,2-Dichloroethene	**5.4**		1.6	0.48	ug/m3			07/12/17 20:17	1
Dichlorodifluoromethane	**1.9**	**J**	2.0	0.67	ug/m3			07/12/17 20:17	1
1,1-Dichloroethane	**0.42**	**J**	1.6	0.20	ug/m3			07/12/17 20:17	1
1,2-Dichloroethane	ND		1.6	0.38	ug/m3			07/12/17 20:17	1
1,1-Dichloroethene	ND		1.6	0.28	ug/m3			07/12/17 20:17	1
Ethylbenzene	**1.9**		1.7	0.59	ug/m3			07/12/17 20:17	1
Methylene Chloride	**5.4**		3.5	2.3	ug/m3			07/12/17 20:17	1
Methyl tert-butyl ether	ND		7.2	1.2	ug/m3			07/12/17 20:17	1
Naphthalene	**2.0**		1.0	1.0	ug/m3			07/12/17 20:17	1
Tetrachloroethene	**1.4**	**J**	2.7	0.54	ug/m3			07/12/17 20:17	1
Toluene	**7.1**		2.3	2.3	ug/m3			07/12/17 20:17	1
trans-1,2-Dichloroethene	ND		1.6	0.40	ug/m3			07/12/17 20:17	1
1,2,4-Trichlorobenzene	ND		3.0	1.4	ug/m3			07/12/17 20:17	1
1,1,1-Trichloroethane	**1.1**	**J B**	2.2	0.33	ug/m3			07/12/17 20:17	1
1,1,2-Trichloroethane	ND		2.2	0.57	ug/m3			07/12/17 20:17	1
Trichloroethene	**31**		1.1	0.38	ug/m3			07/12/17 20:17	1
1,2,3-Trimethylbenzene	ND		2.0	0.84	ug/m3			07/12/17 20:17	1
1,2,4-Trimethylbenzene	**2.5**		2.0	0.61	ug/m3			07/12/17 20:17	1

Client Sample Results

Client: Tetra Tech GEO
Project/Site: Lockheed Martin MRAS Bldg-A/Dock

TestAmerica Job ID: 140-8632-1

Client Sample ID: BLDG-C INFLUENT

Lab Sample ID: 140-8632-6
Matrix: Air

Date Collected: 07/06/17 10:22
Date Received: 07/07/17 09:40
Sample Container: Summa Canister 1L

Method: TO 15 LL - Volatile Organic Compounds in Ambient Air, Low Concentration (GC/MS) (Continued)

Analyte	Result	Qualifier	RL	MDL	Unit	D	Prepared	Analyzed	Dil Fac
1,3,5-Trimethylbenzene	**0.91**	**J**	2.0	0.64	ug/m3			07/12/17 20:17	1
Vinyl chloride	ND		0.51	0.37	ug/m3			07/12/17 20:17	1
Xylenes, Total	**7.0**		3.5	0.52	ug/m3			07/12/17 20:17	1

Surrogate	*%Recovery*	*Qualifier*	*Limits*	*Prepared*	*Analyzed*	*Dil Fac*
4-Bromofluorobenzene (Surr)	*99*		*60 - 140*		*07/12/17 20:17*	*1*

Default Detection Limits

Client: Tetra Tech GEO
Project/Site: Lockheed Martin MRAS Bldg-A/Dock

TestAmerica Job ID: 140-8632-1

Method: TO 15 LL - Volatile Organic Compounds in Ambient Air, Low Concentration (GC/MS)

Analyte	RL	MDL	Units	Method
1,1,1-Trichloroethane	0.080	0.012	ppb v/v	TO 15 LL
1,1,1-Trichloroethane	0.44	0.065	ug/m3	TO 15 LL
1,1,2-Trichloroethane	0.080	0.021	ppb v/v	TO 15 LL
1,1,2-Trichloroethane	0.44	0.11	ug/m3	TO 15 LL
1,1-Dichloroethane	0.080	0.010	ppb v/v	TO 15 LL
1,1-Dichloroethane	0.32	0.040	ug/m3	TO 15 LL
1,1-Dichloroethene	0.080	0.014	ppb v/v	TO 15 LL
1,1-Dichloroethene	0.32	0.056	ug/m3	TO 15 LL
1,2,3-Trimethylbenzene	0.080	0.034	ppb v/v	TO 15 LL
1,2,3-Trimethylbenzene	0.39	0.17	ug/m3	TO 15 LL
1,2,4-Trichlorobenzene	0.080	0.039	ppb v/v	TO 15 LL
1,2,4-Trichlorobenzene	0.59	0.29	ug/m3	TO 15 LL
1,2,4-Trimethylbenzene	0.080	0.025	ppb v/v	TO 15 LL
1,2,4-Trimethylbenzene	0.39	0.12	ug/m3	TO 15 LL
1,2-Dichloroethane	0.080	0.019	ppb v/v	TO 15 LL
1,2-Dichloroethane	0.32	0.077	ug/m3	TO 15 LL
1,3,5-Trimethylbenzene	0.080	0.026	ppb v/v	TO 15 LL
1,3,5-Trimethylbenzene	0.39	0.13	ug/m3	TO 15 LL
Benzene	0.080	0.023	ppb v/v	TO 15 LL
Benzene	0.26	0.073	ug/m3	TO 15 LL
Carbon tetrachloride	0.080	0.015	ppb v/v	TO 15 LL
Carbon tetrachloride	0.50	0.094	ug/m3	TO 15 LL
Chlorodifluoromethane	0.080	0.015	ppb v/v	TO 15 LL
Chlorodifluoromethane	0.28	0.053	ug/m3	TO 15 LL
Chloroform	0.080	0.015	ppb v/v	TO 15 LL
Chloroform	0.39	0.073	ug/m3	TO 15 LL
cis-1,2-Dichloroethene	0.080	0.024	ppb v/v	TO 15 LL
cis-1,2-Dichloroethene	0.32	0.095	ug/m3	TO 15 LL
Dichlorodifluoromethane	0.080	0.027	ppb v/v	TO 15 LL
Dichlorodifluoromethane	0.40	0.13	ug/m3	TO 15 LL
Ethylbenzene	0.080	0.027	ppb v/v	TO 15 LL
Ethylbenzene	0.35	0.12	ug/m3	TO 15 LL
Methyl tert-butyl ether	0.40	0.068	ppb v/v	TO 15 LL
Methyl tert-butyl ether	1.4	0.25	ug/m3	TO 15 LL
Methylene Chloride	0.20	0.13	ppb v/v	TO 15 LL
Methylene Chloride	0.69	0.45	ug/m3	TO 15 LL
Naphthalene	0.040	0.040	ppb v/v	TO 15 LL
Naphthalene	0.21	0.21	ug/m3	TO 15 LL
Tetrachloroethene	0.080	0.016	ppb v/v	TO 15 LL
Tetrachloroethene	0.54	0.11	ug/m3	TO 15 LL
Toluene	0.12	0.12	ppb v/v	TO 15 LL
Toluene	0.45	0.45	ug/m3	TO 15 LL
trans-1,2-Dichloroethene	0.080	0.020	ppb v/v	TO 15 LL
trans-1,2-Dichloroethene	0.32	0.079	ug/m3	TO 15 LL
Trichloroethene	0.040	0.014	ppb v/v	TO 15 LL
Trichloroethene	0.21	0.075	ug/m3	TO 15 LL
Vinyl chloride	0.040	0.029	ppb v/v	TO 15 LL
Vinyl chloride	0.10	0.074	ug/m3	TO 15 LL
Xylenes, Total	0.16	0.024	ppb v/v	TO 15 LL
Xylenes, Total	0.69	0.10	ug/m3	TO 15 LL

Surrogate Summary

Client: Tetra Tech GEO
Project/Site: Lockheed Martin MRAS Bldg-A/Dock

TestAmerica Job ID: 140-8632-1

Method: TO 15 LL - Volatile Organic Compounds in Ambient Air, Low Concentration (GC/MS)

Matrix: Air **Prep Type: Total/NA**

		Percent Surrogate Recovery (Acceptance Limits)							
Lab Sample ID	**Client Sample ID**	**BFB (60-140)**							
140-8632-1	BLDG-A EFFLUENT	102							
140-8632-2	BLDG-A MID-GAC	97							
140-8632-3	BLDG-A INFLUENT	96							
140-8632-4	BLDG-C EFFLUENT	101							
140-8632-5	BLDG-C MID-GAC	99							
140-8632-6	BLDG-C INFLUENT	99							
LCS 140-12612/1002	Lab Control Sample	105							
LCS 140-12613/1002	Lab Control Sample	105							
MB 140-12612/4	Method Blank	99							
MB 140-12613/5	Method Blank	98							

Surrogate Legend

BFB = 4-Bromofluorobenzene (Surr)

Method: TO 15 LL - Volatile Organic Compounds in Ambient Air, Low Concentration (GC/MS)

Lab Sample ID: MB 140-12612/4
Matrix: Air
Analysis Batch: 12612

Client Sample ID: Method Blank
Prep Type: Total/NA

Analyte	MB Result	MB Qualifier	RL	MDL	Unit	D	Prepared	Analyzed	Dil Fac
Benzene	ND		0.080	0.023	ppb v/v			07/11/17 11:20	1
Carbon tetrachloride	ND		0.080	0.015	ppb v/v			07/11/17 11:20	1
Chlorodifluoromethane	ND		0.080	0.015	ppb v/v			07/11/17 11:20	1
Chloroform	ND		0.080	0.015	ppb v/v			07/11/17 11:20	1
cis-1,2-Dichloroethene	ND		0.080	0.024	ppb v/v			07/11/17 11:20	1
Dichlorodifluoromethane	ND		0.080	0.027	ppb v/v			07/11/17 11:20	1
1,1-Dichloroethane	ND		0.080	0.010	ppb v/v			07/11/17 11:20	1
1,2-Dichloroethane	ND		0.080	0.019	ppb v/v			07/11/17 11:20	1
1,1-Dichloroethene	ND		0.080	0.014	ppb v/v			07/11/17 11:20	1
Ethylbenzene	ND		0.080	0.027	ppb v/v			07/11/17 11:20	1
Methylene Chloride	ND		0.20	0.13	ppb v/v			07/11/17 11:20	1
Methyl tert-butyl ether	ND		0.40	0.068	ppb v/v			07/11/17 11:20	1
Naphthalene	ND		0.040	0.040	ppb v/v			07/11/17 11:20	1
Tetrachloroethene	ND		0.080	0.016	ppb v/v			07/11/17 11:20	1
Toluene	ND		0.12	0.12	ppb v/v			07/11/17 11:20	1
trans-1,2-Dichloroethene	ND		0.080	0.020	ppb v/v			07/11/17 11:20	1
1,2,4-Trichlorobenzene	ND		0.080	0.039	ppb v/v			07/11/17 11:20	1
1,1,1-Trichloroethane	0.0169	J	0.080	0.012	ppb v/v			07/11/17 11:20	1
1,1,2-Trichloroethane	ND		0.080	0.021	ppb v/v			07/11/17 11:20	1
Trichloroethene	ND		0.040	0.014	ppb v/v			07/11/17 11:20	1
1,2,3-Trimethylbenzene	ND		0.080	0.034	ppb v/v			07/11/17 11:20	1
1,2,4-Trimethylbenzene	ND		0.080	0.025	ppb v/v			07/11/17 11:20	1
1,3,5-Trimethylbenzene	ND		0.080	0.026	ppb v/v			07/11/17 11:20	1
Vinyl chloride	ND		0.040	0.029	ppb v/v			07/11/17 11:20	1
Xylenes, Total	ND		0.16	0.024	ppb v/v			07/11/17 11:20	1

Analyte	MB Result	MB Qualifier	RL	MDL	Unit	D	Prepared	Analyzed	Dil Fac
Benzene	ND		0.26	0.073	ug/m3			07/11/17 11:20	1
Carbon tetrachloride	ND		0.50	0.094	ug/m3			07/11/17 11:20	1
Chlorodifluoromethane	ND		0.28	0.053	ug/m3			07/11/17 11:20	1
Chloroform	ND		0.39	0.073	ug/m3			07/11/17 11:20	1
cis-1,2-Dichloroethene	ND		0.32	0.095	ug/m3			07/11/17 11:20	1
Dichlorodifluoromethane	ND		0.40	0.13	ug/m3			07/11/17 11:20	1
1,1-Dichloroethane	ND		0.32	0.040	ug/m3			07/11/17 11:20	1
1,2-Dichloroethane	ND		0.32	0.077	ug/m3			07/11/17 11:20	1
1,1-Dichloroethene	ND		0.32	0.056	ug/m3			07/11/17 11:20	1
Ethylbenzene	ND		0.35	0.12	ug/m3			07/11/17 11:20	1
Methylene Chloride	ND		0.69	0.45	ug/m3			07/11/17 11:20	1
Methyl tert-butyl ether	ND		1.4	0.25	ug/m3			07/11/17 11:20	1
Naphthalene	ND		0.21	0.21	ug/m3			07/11/17 11:20	1
Tetrachloroethene	ND		0.54	0.11	ug/m3			07/11/17 11:20	1
Toluene	ND		0.45	0.45	ug/m3			07/11/17 11:20	1
trans-1,2-Dichloroethene	ND		0.32	0.079	ug/m3			07/11/17 11:20	1
1,2,4-Trichlorobenzene	ND		0.59	0.29	ug/m3			07/11/17 11:20	1
1,1,1-Trichloroethane	0.0920	J	0.44	0.065	ug/m3			07/11/17 11:20	1
1,1,2-Trichloroethane	ND		0.44	0.11	ug/m3			07/11/17 11:20	1
Trichloroethene	ND		0.21	0.075	ug/m3			07/11/17 11:20	1
1,2,3-Trimethylbenzene	ND		0.39	0.17	ug/m3			07/11/17 11:20	1

Method: TO 15 LL - Volatile Organic Compounds in Ambient Air, Low Concentration (GC/MS) (Continued)

Lab Sample ID: MB 140-12612/4
Matrix: Air
Analysis Batch: 12612

Client Sample ID: Method Blank
Prep Type: Total/NA

Analyte	MB Result	MB Qualifier	RL	MDL	Unit	D	Prepared	Analyzed	Dil Fac
1,2,4-Trimethylbenzene	ND		0.39	0.12	ug/m3			07/11/17 11:20	1
1,3,5-Trimethylbenzene	ND		0.39	0.13	ug/m3			07/11/17 11:20	1
Vinyl chloride	ND		0.10	0.074	ug/m3			07/11/17 11:20	1
Xylenes, Total	ND		0.69	0.10	ug/m3			07/11/17 11:20	1

Surrogate	*MB %Recovery*	*MB Qualifier*	*Limits*	*Prepared*	*Analyzed*	*Dil Fac*
4-Bromofluorobenzene (Surr)	*99*		*60 - 140*		*07/11/17 11:20*	*1*

Lab Sample ID: LCS 140-12612/1002
Matrix: Air
Analysis Batch: 12612

Client Sample ID: Lab Control Sample
Prep Type: Total/NA

Analyte	Spike Added	LCS Result	LCS Qualifier	Unit	D	%Rec	%Rec. Limits
Benzene	2.00	2.09		ppb v/v		104	70 - 130
Carbon tetrachloride	2.00	2.09		ppb v/v		105	70 - 130
Chlorodifluoromethane	2.00	1.82		ppb v/v		91	60 - 140
Chloroform	2.00	2.14		ppb v/v		107	70 - 130
cis-1,2-Dichloroethene	2.00	2.00		ppb v/v		100	70 - 130
Dichlorodifluoromethane	2.00	1.84		ppb v/v		92	60 - 140
1,1-Dichloroethane	2.00	2.20		ppb v/v		110	70 - 130
1,2-Dichloroethane	2.00	2.06		ppb v/v		103	70 - 130
1,1-Dichloroethene	2.00	2.09		ppb v/v		104	70 - 130
Ethylbenzene	2.00	1.89		ppb v/v		95	70 - 130
Methylene Chloride	2.00	2.07		ppb v/v		103	70 - 130
Methyl tert-butyl ether	2.00	2.00		ppb v/v		100	60 - 140
Naphthalene	2.00	1.55		ppb v/v		77	60 - 140
Tetrachloroethene	2.00	1.83		ppb v/v		91	70 - 130
Toluene	2.00	1.89		ppb v/v		94	70 - 130
trans-1,2-Dichloroethene	2.00	1.98		ppb v/v		99	70 - 130
1,2,4-Trichlorobenzene	2.00	1.42		ppb v/v		71	60 - 140
1,1,1-Trichloroethane	2.00	2.03		ppb v/v		101	70 - 130
1,1,2-Trichloroethane	2.00	1.89		ppb v/v		95	70 - 130
Trichloroethene	2.00	1.97		ppb v/v		98	70 - 130
1,2,3-Trimethylbenzene	2.00	1.80		ppb v/v		90	70 - 130
1,2,4-Trimethylbenzene	2.00	1.84		ppb v/v		92	70 - 130
1,3,5-Trimethylbenzene	2.00	1.71		ppb v/v		86	70 - 130
Vinyl chloride	2.00	2.11		ppb v/v		105	70 - 130
Xylenes, Total	6.00	5.62		ppb v/v		94	70 - 130

Analyte	Spike Added	LCS Result	LCS Qualifier	Unit	D	%Rec	%Rec. Limits
Benzene	6.4	6.67		ug/m3		104	70 - 130
Carbon tetrachloride	13	13.2		ug/m3		105	70 - 130
Chlorodifluoromethane	7.1	6.45		ug/m3		91	60 - 140
Chloroform	9.8	10.5		ug/m3		107	70 - 130
cis-1,2-Dichloroethene	7.9	7.94		ug/m3		100	70 - 130
Dichlorodifluoromethane	9.9	9.11		ug/m3		92	60 - 140
1,1-Dichloroethane	8.1	8.91		ug/m3		110	70 - 130

Method: TO 15 LL - Volatile Organic Compounds in Ambient Air, Low Concentration (GC/MS) (Continued)

Lab Sample ID: LCS 140-12612/1002
Matrix: Air
Analysis Batch: 12612

Client Sample ID: Lab Control Sample
Prep Type: Total/NA

Analyte	Spike Added	LCS Result	LCS Qualifier	Unit	D	%Rec	%Rec. Limits
1,2-Dichloroethane	8.1	8.35		ug/m3		103	70 - 130
1,1-Dichloroethene	7.9	8.28		ug/m3		104	70 - 130
Ethylbenzene	8.7	8.22		ug/m3		95	70 - 130
Methylene Chloride	7.0	7.17		ug/m3		103	70 - 130
Methyl tert-butyl ether	7.2	7.22		ug/m3		100	60 - 140
Naphthalene	10	8.11		ug/m3		77	60 - 140
Tetrachloroethene	14	12.4		ug/m3		91	70 - 130
Toluene	7.5	7.12		ug/m3		94	70 - 130
trans-1,2-Dichloroethene	7.9	7.83		ug/m3		99	70 - 130
1,2,4-Trichlorobenzene	15	10.5		ug/m3		71	60 - 140
1,1,1-Trichloroethane	11	11.1		ug/m3		101	70 - 130
1,1,2-Trichloroethane	11	10.3		ug/m3		95	70 - 130
Trichloroethene	11	10.6		ug/m3		98	70 - 130
1,2,3-Trimethylbenzene	9.8	8.84		ug/m3		90	70 - 130
1,2,4-Trimethylbenzene	9.8	9.04		ug/m3		92	70 - 130
1,3,5-Trimethylbenzene	9.8	8.42		ug/m3		86	70 - 130
Vinyl chloride	5.1	5.38		ug/m3		105	70 - 130
Xylenes, Total	26	24.4		ug/m3		94	70 - 130

Surrogate	*LCS %Recovery*	*LCS Qualifier*	*Limits*
4-Bromofluorobenzene (Surr)	*105*		*60 - 140*

Lab Sample ID: MB 140-12613/5
Matrix: Air
Analysis Batch: 12613

Client Sample ID: Method Blank
Prep Type: Total/NA

Analyte	MB Result	MB Qualifier	RL	MDL	Unit	D	Prepared	Analyzed	Dil Fac
Benzene	ND		0.080	0.023	ppb v/v			07/12/17 12:48	1
Carbon tetrachloride	ND		0.080	0.015	ppb v/v			07/12/17 12:48	1
Chlorodifluoromethane	ND		0.080	0.015	ppb v/v			07/12/17 12:48	1
Chloroform	ND		0.080	0.015	ppb v/v			07/12/17 12:48	1
cis-1,2-Dichloroethene	ND		0.080	0.024	ppb v/v			07/12/17 12:48	1
Dichlorodifluoromethane	ND		0.080	0.027	ppb v/v			07/12/17 12:48	1
1,1-Dichloroethane	ND		0.080	0.010	ppb v/v			07/12/17 12:48	1
1,2-Dichloroethane	ND		0.080	0.019	ppb v/v			07/12/17 12:48	1
1,1-Dichloroethene	ND		0.080	0.014	ppb v/v			07/12/17 12:48	1
Ethylbenzene	ND		0.080	0.027	ppb v/v			07/12/17 12:48	1
Methylene Chloride	ND		0.20	0.13	ppb v/v			07/12/17 12:48	1
Methyl tert-butyl ether	ND		0.40	0.068	ppb v/v			07/12/17 12:48	1
Naphthalene	ND		0.040	0.040	ppb v/v			07/12/17 12:48	1
Tetrachloroethene	ND		0.080	0.016	ppb v/v			07/12/17 12:48	1
Toluene	ND		0.12	0.12	ppb v/v			07/12/17 12:48	1
trans-1,2-Dichloroethene	ND		0.080	0.020	ppb v/v			07/12/17 12:48	1
1,2,4-Trichlorobenzene	ND		0.080	0.039	ppb v/v			07/12/17 12:48	1
1,1,1-Trichloroethane	0.0158	J	0.080	0.012	ppb v/v			07/12/17 12:48	1
1,1,2-Trichloroethane	ND		0.080	0.021	ppb v/v			07/12/17 12:48	1
Trichloroethene	ND		0.040	0.014	ppb v/v			07/12/17 12:48	1

Method: TO 15 LL - Volatile Organic Compounds in Ambient Air, Low Concentration (GC/MS) (Continued)

Lab Sample ID: MB 140-12613/5
Matrix: Air
Analysis Batch: 12613

Client Sample ID: Method Blank
Prep Type: Total/NA

Analyte	MB Result	MB Qualifier	RL	MDL	Unit	D	Prepared	Analyzed	Dil Fac
1,2,3-Trimethylbenzene	ND		0.080	0.034	ppb v/v			07/12/17 12:48	1
1,2,4-Trimethylbenzene	ND		0.080	0.025	ppb v/v			07/12/17 12:48	1
1,3,5-Trimethylbenzene	ND		0.080	0.026	ppb v/v			07/12/17 12:48	1
Vinyl chloride	ND		0.040	0.029	ppb v/v			07/12/17 12:48	1
Xylenes, Total	ND		0.16	0.024	ppb v/v			07/12/17 12:48	1

Analyte	MB Result	MB Qualifier	RL	MDL	Unit	D	Prepared	Analyzed	Dil Fac
Benzene	ND		0.26	0.073	ug/m3			07/12/17 12:48	1
Carbon tetrachloride	ND		0.50	0.094	ug/m3			07/12/17 12:48	1
Chlorodifluoromethane	ND		0.28	0.053	ug/m3			07/12/17 12:48	1
Chloroform	ND		0.39	0.073	ug/m3			07/12/17 12:48	1
cis-1,2-Dichloroethene	ND		0.32	0.095	ug/m3			07/12/17 12:48	1
Dichlorodifluoromethane	ND		0.40	0.13	ug/m3			07/12/17 12:48	1
1,1-Dichloroethane	ND		0.32	0.040	ug/m3			07/12/17 12:48	1
1,2-Dichloroethane	ND		0.32	0.077	ug/m3			07/12/17 12:48	1
1,1-Dichloroethene	ND		0.32	0.056	ug/m3			07/12/17 12:48	1
Ethylbenzene	ND		0.35	0.12	ug/m3			07/12/17 12:48	1
Methylene Chloride	ND		0.69	0.45	ug/m3			07/12/17 12:48	1
Methyl tert-butyl ether	ND		1.4	0.25	ug/m3			07/12/17 12:48	1
Naphthalene	ND		0.21	0.21	ug/m3			07/12/17 12:48	1
Tetrachloroethene	ND		0.54	0.11	ug/m3			07/12/17 12:48	1
Toluene	ND		0.45	0.45	ug/m3			07/12/17 12:48	1
trans-1,2-Dichloroethene	ND		0.32	0.079	ug/m3			07/12/17 12:48	1
1,2,4-Trichlorobenzene	ND		0.59	0.29	ug/m3			07/12/17 12:48	1
1,1,1-Trichloroethane	0.0862	J	0.44	0.065	ug/m3			07/12/17 12:48	1
1,1,2-Trichloroethane	ND		0.44	0.11	ug/m3			07/12/17 12:48	1
Trichloroethene	ND		0.21	0.075	ug/m3			07/12/17 12:48	1
1,2,3-Trimethylbenzene	ND		0.39	0.17	ug/m3			07/12/17 12:48	1
1,2,4-Trimethylbenzene	ND		0.39	0.12	ug/m3			07/12/17 12:48	1
1,3,5-Trimethylbenzene	ND		0.39	0.13	ug/m3			07/12/17 12:48	1
Vinyl chloride	ND		0.10	0.074	ug/m3			07/12/17 12:48	1
Xylenes, Total	ND		0.69	0.10	ug/m3			07/12/17 12:48	1

Surrogate	*MB %Recovery*	*MB Qualifier*	*Limits*	*Prepared*	*Analyzed*	*Dil Fac*
4-Bromofluorobenzene (Surr)	*98*		*60 - 140*		*07/12/17 12:48*	*1*

Lab Sample ID: LCS 140-12613/1002
Matrix: Air
Analysis Batch: 12613

Client Sample ID: Lab Control Sample
Prep Type: Total/NA

Analyte	Spike Added	LCS Result	LCS Qualifier	Unit	D	%Rec	%Rec. Limits
Benzene	2.00	2.05		ppb v/v		102	70 - 130
Carbon tetrachloride	2.00	2.06		ppb v/v		103	70 - 130
Chlorodifluoromethane	2.00	1.78		ppb v/v		89	60 - 140
Chloroform	2.00	2.14		ppb v/v		107	70 - 130
cis-1,2-Dichloroethene	2.00	1.97		ppb v/v		98	70 - 130
Dichlorodifluoromethane	2.00	1.83		ppb v/v		92	60 - 140

Method: TO 15 LL - Volatile Organic Compounds in Ambient Air, Low Concentration (GC/MS) (Continued)

Lab Sample ID: LCS 140-12613/1002
Matrix: Air
Analysis Batch: 12613

Client Sample ID: Lab Control Sample
Prep Type: Total/NA

Analyte	Spike Added	LCS Result	LCS Qualifier	Unit	D	%Rec	%Rec. Limits
1,1-Dichloroethane	2.00	2.22		ppb v/v		111	70 - 130
1,2-Dichloroethane	2.00	2.03		ppb v/v		102	70 - 130
1,1-Dichloroethene	2.00	2.04		ppb v/v		102	70 - 130
Ethylbenzene	2.00	2.08		ppb v/v		104	70 - 130
Methylene Chloride	2.00	2.06		ppb v/v		103	70 - 130
Methyl tert-butyl ether	2.00	2.29		ppb v/v		114	60 - 140
Naphthalene	2.00	1.75		ppb v/v		87	60 - 140
Tetrachloroethene	2.00	1.83		ppb v/v		92	70 - 130
Toluene	2.00	1.96		ppb v/v		98	70 - 130
trans-1,2-Dichloroethene	2.00	1.93		ppb v/v		97	70 - 130
1,2,4-Trichlorobenzene	2.00	1.61		ppb v/v		80	60 - 140
1,1,1-Trichloroethane	2.00	2.03		ppb v/v		102	70 - 130
1,1,2-Trichloroethane	2.00	1.96		ppb v/v		98	70 - 130
Trichloroethene	2.00	1.84		ppb v/v		92	70 - 130
1,2,3-Trimethylbenzene	2.00	2.04		ppb v/v		102	70 - 130
1,2,4-Trimethylbenzene	2.00	2.13		ppb v/v		106	70 - 130
1,3,5-Trimethylbenzene	2.00	2.02		ppb v/v		101	70 - 130
Vinyl chloride	2.00	2.14		ppb v/v		107	70 - 130
Xylenes, Total	6.00	6.36		ppb v/v		106	70 - 130

Analyte	Spike Added	LCS Result	LCS Qualifier	Unit	D	%Rec	%Rec. Limits
Benzene	6.4	6.54		ug/m3		102	70 - 130
Carbon tetrachloride	13	13.0		ug/m3		103	70 - 130
Chlorodifluoromethane	7.1	6.29		ug/m3		89	60 - 140
Chloroform	9.8	10.4		ug/m3		107	70 - 130
cis-1,2-Dichloroethene	7.9	7.80		ug/m3		98	70 - 130
Dichlorodifluoromethane	9.9	9.07		ug/m3		92	60 - 140
1,1-Dichloroethane	8.1	8.98		ug/m3		111	70 - 130
1,2-Dichloroethane	8.1	8.23		ug/m3		102	70 - 130
1,1-Dichloroethene	7.9	8.10		ug/m3		102	70 - 130
Ethylbenzene	8.7	9.03		ug/m3		104	70 - 130
Methylene Chloride	7.0	7.17		ug/m3		103	70 - 130
Methyl tert-butyl ether	7.2	8.26		ug/m3		114	60 - 140
Naphthalene	10	9.15		ug/m3		87	60 - 140
Tetrachloroethene	14	12.4		ug/m3		92	70 - 130
Toluene	7.5	7.37		ug/m3		98	70 - 130
trans-1,2-Dichloroethene	7.9	7.67		ug/m3		97	70 - 130
1,2,4-Trichlorobenzene	15	11.9		ug/m3		80	60 - 140
1,1,1-Trichloroethane	11	11.1		ug/m3		102	70 - 130
1,1,2-Trichloroethane	11	10.7		ug/m3		98	70 - 130
Trichloroethene	11	9.89		ug/m3		92	70 - 130
1,2,3-Trimethylbenzene	9.8	10.0		ug/m3		102	70 - 130
1,2,4-Trimethylbenzene	9.8	10.4		ug/m3		106	70 - 130
1,3,5-Trimethylbenzene	9.8	9.94		ug/m3		101	70 - 130
Vinyl chloride	5.1	5.48		ug/m3		107	70 - 130
Xylenes, Total	26	27.6		ug/m3		106	70 - 130

Method: TO 15 LL - Volatile Organic Compounds in Ambient Air, Low Concentration (GC/MS) (Continued)

Lab Sample ID: LCS 140-12613/1002
Matrix: Air
Analysis Batch: 12613

Client Sample ID: Lab Control Sample
Prep Type: Total/NA

Surrogate	*LCS %Recovery*	*LCS Qualifier*	*Limits*
4-Bromofluorobenzene (Surr)	*105*		*60 - 140*

QC Association Summary

Client: Tetra Tech GEO
Project/Site: Lockheed Martin MRAS Bldg-A/Dock

TestAmerica Job ID: 140-8632-1

Air - GC/MS VOA

Analysis Batch: 12612

Lab Sample ID	Client Sample ID	Prep Type	Matrix	Method	Prep Batch
140-8632-1	BLDG-A EFFLUENT	Total/NA	Air	TO 15 LL	
140-8632-2	BLDG-A MID-GAC	Total/NA	Air	TO 15 LL	
140-8632-3	BLDG-A INFLUENT	Total/NA	Air	TO 15 LL	
140-8632-4	BLDG-C EFFLUENT	Total/NA	Air	TO 15 LL	
140-8632-5	BLDG-C MID-GAC	Total/NA	Air	TO 15 LL	
MB 140-12612/4	Method Blank	Total/NA	Air	TO 15 LL	
LCS 140-12612/1002	Lab Control Sample	Total/NA	Air	TO 15 LL	

Analysis Batch: 12613

Lab Sample ID	Client Sample ID	Prep Type	Matrix	Method	Prep Batch
140-8632-6	BLDG-C INFLUENT	Total/NA	Air	TO 15 LL	
MB 140-12613/5	Method Blank	Total/NA	Air	TO 15 LL	
LCS 140-12613/1002	Lab Control Sample	Total/NA	Air	TO 15 LL	

Lab Chronicle

Client: Tetra Tech GEO
Project/Site: Lockheed Martin MRAS Bldg-A/Dock

TestAmerica Job ID: 140-8632-1

Client Sample ID: BLDG-A EFFLUENT — Lab Sample ID: 140-8632-1

Date Collected: 07/06/17 12:44 — **Matrix: Air**
Date Received: 07/07/17 09:40

Prep Type	Batch Type	Batch Method	Run	Dil Factor	Initial Amount	Final Amount	Batch Number	Prepared or Analyzed	Analyst	Lab
Total/NA	Analysis	TO 15 LL		1	100 mL	500 mL	12612	07/12/17 00:08	HMT	TAL KNX
	Instrument ID: MG									

Client Sample ID: BLDG-A MID-GAC — Lab Sample ID: 140-8632-2

Date Collected: 07/06/17 12:53 — **Matrix: Air**
Date Received: 07/07/17 09:40

Prep Type	Batch Type	Batch Method	Run	Dil Factor	Initial Amount	Final Amount	Batch Number	Prepared or Analyzed	Analyst	Lab
Total/NA	Analysis	TO 15 LL		1	100 mL	500 mL	12612	07/12/17 00:53	HMT	TAL KNX
	Instrument ID: MG									

Client Sample ID: BLDG-A INFLUENT — Lab Sample ID: 140-8632-3

Date Collected: 07/06/17 12:56 — **Matrix: Air**
Date Received: 07/07/17 09:40

Prep Type	Batch Type	Batch Method	Run	Dil Factor	Initial Amount	Final Amount	Batch Number	Prepared or Analyzed	Analyst	Lab
Total/NA	Analysis	TO 15 LL		1	10 mL	500 mL	12612	07/12/17 01:34	HMT	TAL KNX
	Instrument ID: MG									

Client Sample ID: BLDG-C EFFLUENT — Lab Sample ID: 140-8632-4

Date Collected: 07/06/17 10:14 — **Matrix: Air**
Date Received: 07/07/17 09:40

Prep Type	Batch Type	Batch Method	Run	Dil Factor	Initial Amount	Final Amount	Batch Number	Prepared or Analyzed	Analyst	Lab
Total/NA	Analysis	TO 15 LL		1	100 mL	500 mL	12612	07/12/17 02:17	HMT	TAL KNX
	Instrument ID: MG									

Client Sample ID: BLDG-C MID-GAC — Lab Sample ID: 140-8632-5

Date Collected: 07/06/17 10:18 — **Matrix: Air**
Date Received: 07/07/17 09:40

Prep Type	Batch Type	Batch Method	Run	Dil Factor	Initial Amount	Final Amount	Batch Number	Prepared or Analyzed	Analyst	Lab
Total/NA	Analysis	TO 15 LL		1	100 mL	500 mL	12612	07/12/17 02:58	HMT	TAL KNX
	Instrument ID: MG									

Client Sample ID: BLDG-C INFLUENT — Lab Sample ID: 140-8632-6

Date Collected: 07/06/17 10:22 — **Matrix: Air**
Date Received: 07/07/17 09:40

Prep Type	Batch Type	Batch Method	Run	Dil Factor	Initial Amount	Final Amount	Batch Number	Prepared or Analyzed	Analyst	Lab
Total/NA	Analysis	TO 15 LL		1	100 mL	500 mL	12613	07/12/17 20:17	AFB	TAL KNX
	Instrument ID: MG									

Lab Chronicle

Client: Tetra Tech GEO
Project/Site: Lockheed Martin MRAS Bldg-A/Dock

TestAmerica Job ID: 140-8632-1

Client Sample ID: Method Blank — Lab Sample ID: MB 140-12612/4

Date Collected: N/A — **Matrix: Air**
Date Received: N/A

Prep Type	Batch Type	Batch Method	Run	Dil Factor	Initial Amount	Final Amount	Batch Number	Prepared or Analyzed	Analyst	Lab
Total/NA	Analysis	TO 15 LL		1	500 mL	500 mL	12612	07/11/17 11:20	HMT	TAL KNX
	Instrument ID: MG									

Client Sample ID: Method Blank — Lab Sample ID: MB 140-12613/5

Date Collected: N/A — **Matrix: Air**
Date Received: N/A

Prep Type	Batch Type	Batch Method	Run	Dil Factor	Initial Amount	Final Amount	Batch Number	Prepared or Analyzed	Analyst	Lab
Total/NA	Analysis	TO 15 LL		1	500 mL	500 mL	12613	07/12/17 12:48	AFB	TAL KNX
	Instrument ID: MG									

Client Sample ID: Lab Control Sample — Lab Sample ID: LCS 140-12612/1002

Date Collected: N/A — **Matrix: Air**
Date Received: N/A

Prep Type	Batch Type	Batch Method	Run	Dil Factor	Initial Amount	Final Amount	Batch Number	Prepared or Analyzed	Analyst	Lab
Total/NA	Analysis	TO 15 LL		1	500 mL	500 mL	12612	07/11/17 09:35	HMT	TAL KNX
	Instrument ID: MG									

Client Sample ID: Lab Control Sample — Lab Sample ID: LCS 140-12613/1002

Date Collected: N/A — **Matrix: Air**
Date Received: N/A

Prep Type	Batch Type	Batch Method	Run	Dil Factor	Initial Amount	Final Amount	Batch Number	Prepared or Analyzed	Analyst	Lab
Total/NA	Analysis	TO 15 LL		1	500 mL	500 mL	12613	07/12/17 10:24	AFB	TAL KNX
	Instrument ID: MG									

Laboratory References:
TAL KNX = TestAmerica Knoxville, 5815 Middlebrook Pike, Knoxville, TN 37921, TEL (865)291-3000

Method Summary

Client: Tetra Tech GEO
Project/Site: Lockheed Martin MRAS Bldg-A/Dock

TestAmerica Job ID: 140-8632-1

Method	Method Description	Protocol	Laboratory
TO 15 LL	Volatile Organic Compounds in Ambient Air, Low Concentration (GC/MS)	EPA	TAL KNX

Protocol References:

EPA = US Environmental Protection Agency

Laboratory References:

TAL KNX = TestAmerica Knoxville, 5815 Middlebrook Pike, Knoxville, TN 37921, TEL (865)291-3000

Sample Summary

Client: Tetra Tech GEO
Project/Site: Lockheed Martin MRAS Bldg-A/Dock

TestAmerica Job ID: 140-8632-1

Lab Sample ID	Client Sample ID	Matrix	Collected	Received
140-8632-1	BLDG-A EFFLUENT	Air	07/06/17 12:44	07/07/17 09:40
140-8632-2	BLDG-A MID-GAC	Air	07/06/17 12:53	07/07/17 09:40
140-8632-3	BLDG-A INFLUENT	Air	07/06/17 12:56	07/07/17 09:40
140-8632-4	BLDG-C EFFLUENT	Air	07/06/17 10:14	07/07/17 09:40
140-8632-5	BLDG-C MID-GAC	Air	07/06/17 10:18	07/07/17 09:40
140-8632-6	BLDG-C INFLUENT	Air	07/06/17 10:22	07/07/17 09:40

180325

BALTIMORE

TAL Knoxville
5815 Middlebrook Pike
Knoxville, TN 37921
phone 865-291-3000 fax 865-584-4315

Canister Samples Chain of Custody Record

TestAmerica assumes no liability with respect to the collection and shipment of these samples.

TestAmerica
THE LEADER IN ENVIRONMENTAL TESTING

Client Contact Information
Company: Tetra Tech
Address: 51 Franklin St
City/State/Zip Annapolis/MD/21401
Phone 410-990-4607
FAX:
Project Name: Lockheed Martin MRAS
Site/location: BLDG-A / Dock
PO # N7-0512124

Project Manager: Peter Rich
Phone: 410-990-4607
Site Contact:
TAL Contact:

Sampled By: J. M. Wilks

___ of ___ COCs

140-8632 Chain of Custody

Analysis Turnaround Time
Standard (Specify)
Rush (Specify)

Sample Identification	Sample Date(s)	Time Start	Time Stop	Canister Vacuum in Field, "Hg (Start)	Canister Vacuum in Field, "Hg (Stop)	Flow Controller ID	Canister ID	TO-15	TO-14A	EPA 3C	EPA 25C	ASTM D-1946	Other (Please specify in notes section)	Sample Type	Indoor Air	Ambient Air	Soil Gas	Landfill Gas	Other (Please specify in notes section)
BLDG-A EFFLUENT	7-6-17	1242	1244	31	2	09958	10344	✓											
BLDG-A MID-GAC	↓	1251	1253	29.5	0	10911	09831	✓											
BLDG-A INFLUENT	↓	1255	1256	29	0	10930	09798	✓											
BLDG-C EFFLUENT	↓	1012	1014	29	1	10104	09581	✓											
BLDG-C MID-GAC	↓	1016	1018	29.5	0	09569	10744	✓											
BLDG-C INFLUENT	↓	1020	1022	28	0	10901	N255	✓											

Sampled by :

Temperature (Fahrenheit)	Interior	Ambient	
Start			
Stop			

Pressure (inches of Hg)	Interior	Ambient	
Start			
Stop			

Received @ ambient, Dock
FedEx Ground #7957297 6417
Custody seal intact
KW 7/7/17

Special Instructions/QC Requirements & Comments:

Canisters Shipped by:	Date/Time:	Canisters Received by:
Samples Relinquished by: J. M. Wilks	Date/Time: 7-6-17 / 1548	Received by:
Relinquished by:	Date/Time: 7-6-2017 / 1600	Received by: 7/7/17 0910

6 Cans
6 KR

Loc: 140
8632

TESTAMERICA KNOXVILLE SAMPLE RECEIPT/CONDITION UPON RECEIPT ANOMALY CHECKLIST **Log In Number:**

Review Items	Yes	No	NA	If No, what was the problem?
1. Are the shipping containers intact?	/			☐ **Containers, Broken**
2. Were ambient air containers received intact?			/	☑ Checked in lab
3. The coolers/containers custody seal if present, is it intact?	/			☐ Yes ☐ NA
4. Is the cooler temperature within limits? (> freezing temp. of water to 6 °C, VOST: 10°C) Thermometer ID :_____ Correction factor: _____			/	☐ **Cooler Out of Temp, Client Contacted, Proceed/Cancel** ☐ **Cooler Out of Temp, Same Day Receipt**
5. Were all of the sample containers received intact?	/			☐ **Containers, Broken**
6. Were samples received in appropriate containers?	/			☐ **Containers, Improper; Client Contacted; Proceed/Cancel**
7. Do sample container labels match COC? (IDs, Dates, Times)	/			☐ **COC & Samples Do Not Match** ☐ **COC Incorrect/Incomplete** ☐ **COC Not Received**
8. Were all of the samples listed on the COC received?	/			☐ **Sample Received, Not on COC** ☐ **Sample on COC, Not Received**
9. Is the date/time of sample collection noted?	/			☐ **COC; No Date/Time; Client Contacted**
10. Was the sampler identified on the COC?	/			☐ **Sampler Not Listed on COC**
11. Is the client and project name/# identified?	/			☐ **COC Incorrect/Incomplete**
12. Are tests/parameters listed for each sample?	/			☐ **COC No tests on COC**
13. Is the matrix of the samples noted?	/			☐ **COC Incorrect/Incomplete**
14. Was COC relinquished? (Signed/Dated/Timed)	/			☐ **COC Incorrect/Incomplete**
15. Were samples received within holding time?	/			☐ **Holding Time - Receipt**
16. Were samples received with correct chemical preservative (excluding Encore)?			/	☐ **pH Adjusted, pH Included (See box 16A)** ☐ **Incorrect Preservative**
17. Were VOA samples received without headspace?			/	☐ **Headspace (VOA only)**
18. Did you check for residual chlorine, if necessary? (e.g. 1613B, 1668) Chlorine test strip lot number:_____			/	☐ **Residual Chlorine**
19. For 1613B water samples is pH<9?			/	☐ If no, lab will adjust
20. For rad samples was sample activity info. Provided?			/	☐ Project missing info

Comments/Actions Taken

Labeling Verified by: **Date:**

pH test strip lot number:

	Box 16A: pH Preservation	Box 18A: Residual Chlorine
Preservative:		
Lot Number:		
Exp Date:		
Analyst:		
Date:		
Time:		

Project #: 14002921 PM Instructions: _____

Sample Receiving Associate: [signature] Date: 7/7/17

QA026R30.doc, 080916

ANALYTICAL REPORT

Job Number: 240-81698-1

Job Description: MRC Waste Characterization

For:
Tetra Tech, Inc.
20251 Century Blvd
Suite 200
Germantown, MD 20874

Attention: Tony Apanavage

Approved for release.
John McFadden
Project Manager I
7/12/2017 5:22 PM

John McFadden, Project Manager I
4101 Shuffel Street NW, North Canton, OH, 44720
john.mcfadden@testamericainc.com
07/12/2017

cc: Samantha Brenner
Kelly Carper
Tobrena Sedlmyer

The test results in this report meet all NELAP requirements for parameters for which accreditation is required or available. Any exceptions to the NELAP requirements are noted in this report. Pursuant to NELAP, this report may not be reproduced, except in full, without the written approval of the laboratory. This report is confidential and is intended for the sole use of TestAmerica and its client. All questions regarding this report should be directed to the TestAmerica Project Manager who has signed this report.

Table of Contents

Cover Title Page 1

Data Summaries 5

- Report Narrative 5
- Manual Integration Summary 8
- Sample Summary 22
- Executive Summary 23
- Method Summary 25
- Method / Analyst Summary 26
- Sample Datasheets 27
- Surrogate Summary 50
- QC Data Summary 54
- Data Qualifiers 95
- QC Association Summary 96
- Lab Chronicle 101
- Reagent Traceability 107
- Certification Summary 160

Organic Sample Data 161

- GC/MS VOA 161
  - Method 8260C 161
    - Method 8260C QC Summary 162
    - Method 8260C Sample Data 195
    - Standards Data 210
      - Method 8260C ICAL Data 210
      - Method 8260C CCAL Data 238
    - Raw QC Data 260
      - Method 8260C Blank Data 260

Table of Contents

Method 8260C LCS/LCSD Data 269

Method 8260C MS/MSD Data 279

Method 8260C Run Logs 293

Method 8260C Prep Data 298

GC Semi VOA 299

Method 8082A 299

Method 8082A QC Summary 300

Method 8082A Sample Data 320

Standards Data 325

Method 8082A ICAL Data 325

Method 8082A CCAL Data 365

Raw QC Data 437

Method 8082A Blank Data 437

Method 8082A LCS/LCSD Data 439

Method 8082A MS/MSD Data 441

Method 8082A Run Logs 443

Method 8082A Prep Data 453

Inorganic Sample Data 455

Metals Data 455

Met Cover Page 456

Met Sample Data 457

Met QC Data 461

Met ICV/CCV 461

Met CRQL 473

Met Blanks 474

Met ICSA/ICSAB 489

Table of Contents

Met MS/MSD/PDS 493

Met LCS/LCSD 501

Met Serial Dilution 505

Met MDL 507

Met IECF 515

Met Linear Ranges 517

Met Preparation Log 519

Met Analysis Run Log 523

Met Prep Data 541

General Chemistry Data 551

Gen Chem Cover Page 552

Gen Chem Sample Data 553

Gen Chem QC Data 557

Gen Chem Duplicates 557

Gen Chem LCS/LCSD 559

Gen Chem MDL 561

Gen Chem Analysis Run Log 567

Gen Chem Prep Data 574

Shipping and Receiving Documents 577

Client Chain of Custody 578

CASE NARRATIVE

Client: Tetra Tech, Inc.

Project: MRC Waste Characterization

Report Number: 240-81698-1

With the exceptions noted as flags or footnotes, standard analytical protocols were followed in the analysis of the samples and no problems were encountered or anomalies observed. In addition all laboratory quality control samples were within established control limits, with any exceptions noted below. Each sample was analyzed to achieve the lowest possible reporting limit within the constraints of the method. In some cases, due to interference or analytes present at high concentrations, samples were diluted. For diluted samples, the reporting limits are adjusted relative to the dilution required.

TestAmerica Canton attests to the validity of the laboratory data generated by TestAmerica facilities reported herein. All analyses performed by TestAmerica facilities were done using established laboratory SOPs that incorporate QA/QC procedures described in the application methods. TestAmerica's operations groups have reviewed the data for compliance with the laboratory QA/QC plan, and data have been found to be compliant with laboratory protocols unless otherwise noted below.

The test results in this report meet all NELAP requirements for parameters for which accreditation is required or available. Any exceptions to NELAP requirements are noted in this report. Pursuant to NELAP, this report may not be reproduced, except in full, without the written approval of the laboratory.

Calculations are performed before rounding to avoid round-off errors in calculated results.

All holding times were met and proper preservation noted for the methods performed on these samples, unless otherwise detailed in the individual sections below.

All solid sample results are reported on an "as received" basis unless otherwise indicated by the presence of a % solids value in the method header.

This laboratory report is confidential and is intended for the sole use of TestAmerica and its client.

RECEIPT
The samples were received on 6/29/2017 9:20 AM; the samples arrived in good condition, properly preserved and, where required, on ice. The temperatures of the 2 coolers at receipt time were 1.3º C and 1.8º C.

VOLATILE ORGANIC COMPOUNDS (GCMS)
Samples WC-FSOIL-062817 (240-81698-3) and WC-SGEO-062817 (240-81698-5) were analyzed for volatile organic compounds (GCMS) in accordance with EPA SW-846 Method 8260C. The samples were prepared and analyzed on 07/03/2017.

Several analytes were detected in method blank MB 240-285711/7 at levels that were above the method detection limit but below the reporting limit. The values should be considered estimates, and have been flagged. If the associated sample reported a result above the MDL and/or RL, the result has been flagged.

No additional analytical or quality issues were noted, other than those described above or in the Definitions/Glossary page.

VOLATILE ORGANIC COMPOUNDS (GCMS)
Samples TB-062817 (240-81698-1), WC-FDCON-062817 (240-81698-4) and WC-WGEO-062817 (240-81698-6) were analyzed for volatile organic compounds (GCMS) in accordance with EPA SW-846 Method 8260C. The samples were analyzed on 07/05/2017 and 07/06/2017.

2-Butanone (MEK) was detected in method blank MB 240-285874/6 at a level that was above the method detection limit but below the reporting limit. The value should be considered an estimate, and has been flagged. If the associated sample reported a result above the MDL and/or RL, the result has been flagged.

Samples WC-FDCON-062817 (240-81698-4)[6.25X] and WC-WGEO-062817 (240-81698-6)[50X] required dilution prior to analysis. The reporting limits have been adjusted accordingly.

The continuing calibration verification (CCV) analyzed in batch 240-286045 was outside the method criteria for the following analyte: Chloromethane. A CCV standard at or below the reporting limit (RL) was analyzed with the affected samples and found to be acceptable. As indicated in the reference method, sample analysis may proceed; however, any detection for the affected analyte is considered estimated.

The following samples were received preserved with hydrochloric acid: TB-062817 (240-81698-1), WC-FDCON-062817 (240-81698-4)

and WC-WGEO-062817 (240-81698-6). The requested target analyte list includes 2-chloroethyl vinyl ether, an acid-labile compound that degrades in an acidic medium.

The continuing calibration verification (CCV) analyzed in batch 240-285874 was outside the method criteria for the following analytes: 1,1,2,2-tetrachloroethane and Dichlorodi fluoromethane. A CCV standard at or below the reporting limit (RL) was analyzed with the affected samples and found to be acceptable. As indicated in the reference method, sample analysis may proceed; however, any detection for the affected analytes is considered estimated.

No additional analytical or quality issues were noted, other than those described above or in the Definitions/Glossary page.

POLYCHLORINATED BIPHENYLS (PCBS)

Samples WC-FSOIL-062817 (240-81698-3) and WC-SGEO-062817 (240-81698-5) were analyzed for polychlorinated biphenyls (PCBs) in accordance with EPA SW-846 Method 8082A. The samples were prepared on 07/05/2017 and analyzed on 07/07/2017.

Surrogates are added during the extraction process prior to dilution. When the sample dilution is 5X or greater, surrogate recoveries are diluted out and no corrective action is required. All of the samples in this data set analyzed for PCBs were subjected to the sulfuric acid cleanup procedure before instrumental analysis, per EPA Method 3665A.

The following samples appear to contain polychlorinated biphenyls (PCBs); however, the Aroclor patterns of the PCBs in the samples are altered and do not directly match the laboratory's individual Aroclor standards used for instrument calibration: WC-FSOIL-062817 (240-81698-3) and WC-SGEO-062817 (240-81698-5). These altered PCB patterns may be caused by weathering, other environmental processes, and/or contributions from the presence of multiple Aroclors resulting in overlapping PCB patterns. The samples have been quantified and reported using the best overall Aroclor/standard pattern match. Due to the reasons stated above there is increased quantitative uncertainty associated with the reported results.

No additional analytical or quality issues were noted, other than those described above or in the Definitions/Glossary page.

POLYCHLORINATED BIPHENYLS (PCBS)

Samples WC-FDCON-062817 (240-81698-4) and WC-WGEO-062817 (240-81698-6) were analyzed for polychlorinated biphenyls (PCBs) in accordance with EPA SW-846 Method 8082A. The samples were prepared on 06/30/2017 and analyzed on 07/05/2017.

Surrogates are added during the extraction process prior to dilution. When the sample dilution is 5X or greater, surrogate recoveries are diluted out and no corrective action is required. All of the samples in this data set analyzed for PCBs were subjected to the sulfuric acid cleanup procedure before instrumental analysis, per EPA Method 3665A.

Insufficient sample volume was available to perform a matrix spike/matrix spike duplicate (MS/MSD) associated with preparation batch 240-285524.

The %RPD between the primary and confirmation column exceeded 40% for the following sample: WC-WGEO-062817 (240-81698-6). The lower value has been reported and qualified.

The following samples required a tetrabutylammonium sulfite (TBA) clean-up to reduce matrix interferences caused by sulfur: WC-FDCON-062817 (240-81698-4) and WC-WGEO-062817 (240-81698-6).

The following sample appears to contain polychlorinated biphenyls (PCBs); however, due to weathering, other environmental processes and/or contributions from the presence of multiple Aroclors, resulting in overlapping PCB patterns, the PCBs in the samples do not directly match any of the laboratory's Aroclor standards used for instrument calibration: WC-WGEO-062817 (240-81698-6). The samples have been quantified and reported using the best overall Aroclor/standard pattern match. Due to the reasons stated above there is increased quantitative uncertainty associated with this result.

No additional analytical or quality issues were noted, other than those described above or in the Definitions/Glossary page.

TCLP METALS (ICP)

Samples WC-FSOIL-062817 (240-81698-3), WC-FDCON-062817 (240-81698-4), WC-SGEO-062817 (240-81698-5) and WC-WGEO-062817 (240-81698-6) were analyzed for TCLP metals (ICP) in accordance with EPA SW-846 Methods 1311/6010B. The samples were leached on 07/05/2017 and 07/06/2017, prepared on 07/06/2017 and 07/07/2017 and analyzed on 07/07/2017 and 07/11/2017.

Arsenic, Barium and Chromium were detected in method blank LB 240-286004/1-B at levels that were above the method detection limit but below the reporting limit. The values should be considered estimates, and have been flagged. If the associated sample reported a result above the MDL and/or RL, the result has been flagged.

Arsenic, Barium, Chromium and Selenium were detected in method blank LB 240-286170/1-B at levels that were above the method detection limit but below the reporting limit. The values should be considered estimates, and have been flagged. If the associated sample reported a result above the MDL and/or RL, the result has been flagged.

No additional analytical or quality issues were noted, other than those described above or in the Definitions/Glossary page.

TCLP MERCURY

Samples WC-FSOIL-062817 (240-81698-3), WC-FDCON-062817 (240-81698-4), WC-SGEO-062817 (240-81698-5) and WC-WGEO-062817 (240-81698-6) were analyzed for TCLP mercury in accordance with EPA SW-846 Methods 1311/7470A. The samples were leached on 07/05/2017 and 07/06/2017, prepared on 07/06/2017 and 07/07/2017 and analyzed on 07/07/2017 and 07/10/2017.

No analytical or quality issues were noted, other than those described above or in the Definitions/Glossary page.

FLASHPOINT
Samples WC-FSOIL-062817 (240-81698-3) and WC-SGEO-062817 (240-81698-5) were analyzed for flashpoint in accordance with EPA SW-846 Method 1010. The samples were analyzed on 07/07/2017.

No analytical or quality issues were noted, other than those described above or in the Definitions/Glossary page.

FLASHPOINT
Samples WC-FDCON-062817 (240-81698-4) and WC-WGEO-062817 (240-81698-6) were analyzed for flashpoint in accordance with EPA SW-846 Method 1010. The samples were analyzed on 07/11/2017.

No analytical or quality issues were noted, other than those described above or in the Definitions/Glossary page.

PERCENT SOLIDS
Samples WC-FSOIL-062817 (240-81698-3) and WC-SGEO-062817 (240-81698-5) were analyzed for percent solids in accordance with EPA Method 160.3 MOD. The samples were analyzed on 06/30/2017.

No analytical or quality issues were noted, other than those described above or in the Definitions/Glossary page.

GC/MS VOA MANUAL INTEGRATION SUMMARY

Lab Name: TestAmerica Canton Job No.: 240-81698-1

SDG No.:

Instrument ID: A3UX16 Analysis Batch Number: 272263

Lab Sample ID: STD8260 240-272263/7 IC Client Sample ID:

Date Analyzed: 03/29/17 14:25 Lab File ID: UXM1389.D GC Column: DB-624 ID: 0.18(mm)

COMPOUND NAME	RETENTION TIME	MANUAL INTEGRATION		
		REASON	ANALYST	DATE
1,2-Dibromo-3-Chloropropane	11.32	Missed Peak	laveyt	03/29/17 15:11

PCBS MANUAL INTEGRATION SUMMARY

Lab Name: TestAmerica Canton Job No.: 240-81698-1

SDG No.:

Instrument ID: A2HP11 Analysis Batch Number: 281427

Lab Sample ID: STD005 240-281427/4 IC Client Sample ID:

Date Analyzed: 06/04/17 11:28 Lab File ID: P11060404.D GC Column: CLP-1 (0.53mm ID: 0.53(mm)

COMPOUND NAME	RETENTION TIME	MANUAL INTEGRATION		
		REASON	ANALYST	DATE
PCB-1232 Peak 1	5.06	Baseline Smoothing	hassl	06/05/17 05:49
PCB-1232 Peak 2	5.52	Baseline Smoothing	hassl	06/05/17 05:49
PCB-1232 Peak 3	6.11	Baseline Smoothing	hassl	06/05/17 05:49
PCB-1232 Peak 4	6.28	Baseline Smoothing	hassl	06/05/17 05:49
PCB-1232 Peak 5	6.79	Baseline Smoothing	hassl	06/05/17 05:49
PCB-1262 Peak 1	8.25	Baseline Smoothing	hassl	06/05/17 05:50
PCB-1262 Peak 2	8.58	Baseline Smoothing	hassl	06/05/17 05:50
PCB-1262 Peak 3	9.04	Baseline Smoothing	hassl	06/05/17 05:50
PCB-1262 Peak 4	9.68	Baseline Smoothing	hassl	06/05/17 05:50
PCB-1262 Peak 5	10.04	Baseline Smoothing	hassl	06/05/17 05:50

Lab Sample ID: STD01 240-281427/5 IC Client Sample ID:

Date Analyzed: 06/04/17 11:47 Lab File ID: P11060405.D GC Column: CLP-1 (0.53mm ID: 0.53(mm)

COMPOUND NAME	RETENTION TIME	MANUAL INTEGRATION		
		REASON	ANALYST	DATE
PCB-1232 Peak 1	5.06	Baseline Smoothing	hassl	06/05/17 05:50
PCB-1232 Peak 2	5.52	Baseline Smoothing	hassl	06/05/17 05:50
PCB-1232 Peak 3	6.11	Baseline Smoothing	hassl	06/05/17 05:50
PCB-1232 Peak 4	6.28	Baseline Smoothing	hassl	06/05/17 05:50
PCB-1232 Peak 5	6.79	Baseline Smoothing	hassl	06/05/17 05:50
PCB-1262 Peak 1	8.25	Baseline Smoothing	hassl	06/05/17 05:50
PCB-1262 Peak 2	8.58	Baseline Smoothing	hassl	06/05/17 05:50
PCB-1262 Peak 3	9.04	Baseline Smoothing	hassl	06/05/17 05:50
PCB-1262 Peak 4	9.68	Baseline Smoothing	hassl	06/05/17 05:50
PCB-1262 Peak 5	10.04	Baseline Smoothing	hassl	06/05/17 05:50

PCBS MANUAL INTEGRATION SUMMARY

Lab Name: TestAmerica Canton Job No.: 240-81698-1

SDG No.:

Instrument ID: A2HP11 Analysis Batch Number: 281427

Lab Sample ID: STD02 240-281427/6 IC Client Sample ID:

Date Analyzed: 06/04/17 12:06 Lab File ID: P11060406.D GC Column: CLP-1 (0.53mm ID: 0.53(mm)

COMPOUND NAME	RETENTION TIME	MANUAL INTEGRATION		
		REASON	ANALYST	DATE
PCB-1232 Peak 1	5.06	Baseline Smoothing	hassl	06/05/17 06:07
PCB-1232 Peak 2	5.52	Baseline Smoothing	hassl	06/05/17 06:07
PCB-1232 Peak 3	6.11	Baseline Smoothing	hassl	06/05/17 06:07
PCB-1232 Peak 4	6.28	Baseline Smoothing	hassl	06/05/17 06:07
PCB-1232 Peak 5	6.79	Baseline Smoothing	hassl	06/05/17 06:07
PCB-1262 Peak 1	8.25	Baseline Smoothing	hassl	06/05/17 06:07
PCB-1262 Peak 2	8.58	Baseline Smoothing	hassl	06/05/17 06:07
PCB-1262 Peak 3	9.04	Baseline Smoothing	hassl	06/05/17 06:07
PCB-1262 Peak 4	9.68	Baseline Smoothing	hassl	06/05/17 06:07
PCB-1262 Peak 5	10.04	Baseline Smoothing	hassl	06/05/17 06:07

Lab Sample ID: STD02 240-281427/6 IC Client Sample ID:

Date Analyzed: 06/04/17 12:06 Lab File ID: P11060406.D GC Column: CLP-2 (0.53mm ID: 0.53(mm)

COMPOUND NAME	RETENTION TIME	MANUAL INTEGRATION		
		REASON	ANALYST	DATE
PCB-1232 Peak 1	6.02	Split Peak	hassl	06/05/17 06:07
PCB-1232 Peak 2	6.58	Split Peak	hassl	06/05/17 06:07
PCB-1232 Peak 3	7.16	Split Peak	hassl	06/05/17 06:07
PCB-1232 Peak 4	7.34	Split Peak	hassl	06/05/17 06:07
PCB-1232 Peak 5	7.93	Split Peak	hassl	06/05/17 06:07

PCBS MANUAL INTEGRATION SUMMARY

Lab Name: TestAmerica Canton Job No.: 240-81698-1

SDG No.:

Instrument ID: A2HP11 Analysis Batch Number: 281427

Lab Sample ID: std1.5 1232 1262 IC Client Sample ID:

Date Analyzed: 06/04/17 13:02 Lab File ID: P11060409.D GC Column: CLP-1 (0.53mm ID: 0.53(mm)

COMPOUND NAME	RETENTION TIME	MANUAL INTEGRATION		
		REASON	ANALYST	DATE
PCB-1232 Peak 1	5.06	Baseline Smoothing	hassl	06/05/17 05:51
PCB-1232 Peak 2	5.52	Baseline Smoothing	hassl	06/05/17 05:51
PCB-1232 Peak 3	6.11	Baseline Smoothing	hassl	06/05/17 05:51
PCB-1232 Peak 4	6.28	Baseline Smoothing	hassl	06/05/17 05:51
PCB-1232 Peak 5	6.79	Baseline Smoothing	hassl	06/05/17 05:51

Lab Sample ID: std1.5 1232 1262 IC Client Sample ID:

Date Analyzed: 06/04/17 13:02 Lab File ID: P11060409.D GC Column: CLP-2 (0.53mm ID: 0.53(mm)

COMPOUND NAME	RETENTION TIME	MANUAL INTEGRATION		
		REASON	ANALYST	DATE
PCB-1232 Peak 1	6.02	Baseline Smoothing	hassl	06/05/17 06:00
PCB-1232 Peak 2	6.58	Baseline Smoothing	hassl	06/05/17 06:00
PCB-1232 Peak 3	7.17	Baseline Smoothing	hassl	06/05/17 06:00
PCB-1232 Peak 4	7.34	Baseline Smoothing	hassl	06/05/17 06:00
PCB-1232 Peak 5	7.93	Baseline Smoothing	hassl	06/05/17 06:00

Lab Sample ID: std1.5 1242 1268 IC Client Sample ID:

Date Analyzed: 06/04/17 14:53 Lab File ID: P11060415.D GC Column: CLP-1 (0.53mm ID: 0.53(mm)

COMPOUND NAME	RETENTION TIME	MANUAL INTEGRATION		
		REASON	ANALYST	DATE
PCB-1242 Peak 1	5.06	Baseline Smoothing	hassl	06/05/17 05:51
PCB-1242 Peak 2	5.52	Baseline Smoothing	hassl	06/05/17 05:51
PCB-1242 Peak 3	6.11	Baseline Smoothing	hassl	06/05/17 05:51
PCB-1242 Peak 4	6.28	Baseline Smoothing	hassl	06/05/17 05:51
PCB-1242 Peak 5	6.79	Baseline Smoothing	hassl	06/05/17 05:51

PCBS MANUAL INTEGRATION SUMMARY

Lab Name: TestAmerica Canton Job No.: 240-81698-1

SDG No.:

Instrument ID: A2HP11 Analysis Batch Number: 281427

Lab Sample ID: STD005 240-281427/16 IC Client Sample ID:

Date Analyzed: 06/04/17 15:12 Lab File ID: P11060416.D GC Column: CLP-1 (0.53mm ID: 0.53(mm)

COMPOUND NAME	RETENTION TIME	MANUAL INTEGRATION		
		REASON	ANALYST	DATE
PCB-1248 Peak 1	6.11	Baseline Smoothing	hassl	06/05/17 06:18
PCB-1248 Peak 2	6.79	Baseline Smoothing	hassl	06/05/17 06:18
PCB-1248 Peak 3	7.31	Split Peak	hassl	06/05/17 06:18
PCB-1248 Peak 4	7.57	Baseline Smoothing	hassl	06/05/17 06:18
PCB-1248 Peak 5	8.04	Baseline Smoothing	hassl	06/05/17 06:18

Lab Sample ID: STD02 240-281427/18 IC Client Sample ID:

Date Analyzed: 06/04/17 15:49 Lab File ID: P11060418.D GC Column: CLP-1 (0.53mm ID: 0.53(mm)

COMPOUND NAME	RETENTION TIME	MANUAL INTEGRATION		
		REASON	ANALYST	DATE
PCB-1248 Peak 1	6.10	Baseline Smoothing	hassl	06/05/17 06:17
PCB-1248 Peak 2	6.79	Baseline Smoothing	hassl	06/05/17 06:17
PCB-1248 Peak 3	7.31	Split Peak	hassl	06/05/17 06:18
PCB-1248 Peak 4	7.57	Baseline Smoothing	hassl	06/05/17 06:17
PCB-1248 Peak 5	8.03	Baseline Smoothing	hassl	06/05/17 06:17

Lab Sample ID: STD05 240-281427/19 IC Client Sample ID:

Date Analyzed: 06/04/17 16:08 Lab File ID: P11060419.D GC Column: CLP-1 (0.53mm ID: 0.53(mm)

COMPOUND NAME	RETENTION TIME	MANUAL INTEGRATION		
		REASON	ANALYST	DATE
PCB-1248 Peak 1	6.10	Split Peak	hassl	06/05/17 06:17
PCB-1248 Peak 2	6.79	Split Peak	hassl	06/05/17 06:17
PCB-1248 Peak 3	7.31	Split Peak	hassl	06/05/17 06:17
PCB-1248 Peak 4	7.57	Split Peak	hassl	06/05/17 06:17
PCB-1248 Peak 5	8.04	Split Peak	hassl	06/05/17 06:17

PCBS MANUAL INTEGRATION SUMMARY

Lab Name: TestAmerica Canton Job No.: 240-81698-1

SDG No.:

Instrument ID: A2HP11 Analysis Batch Number: 281427

Lab Sample ID: STD005 240-281427/28 IC Client Sample ID:

Date Analyzed: 06/04/17 18:55 Lab File ID: P11060428.D GC Column: CLP-1 (0.53mm ID: 0.53(mm)

COMPOUND NAME	RETENTION TIME	MANUAL INTEGRATION		
		REASON	ANALYST	DATE
PCB-1260 Peak 1	8.25	Baseline Smoothing	hassl	06/05/17 05:54
PCB-1260 Peak 2	8.58	Baseline Smoothing	hassl	06/05/17 05:54
PCB-1260 Peak 3	8.90	Baseline Smoothing	hassl	06/05/17 05:54
PCB-1260 Peak 4	9.68	Baseline Smoothing	hassl	06/05/17 05:54
PCB-1260 Peak 5	9.99	Baseline Smoothing	hassl	06/05/17 05:54

Lab Sample ID: STD01 240-281427/29 IC Client Sample ID:

Date Analyzed: 06/04/17 19:14 Lab File ID: P11060429.D GC Column: CLP-1 (0.53mm ID: 0.53(mm)

COMPOUND NAME	RETENTION TIME	MANUAL INTEGRATION		
		REASON	ANALYST	DATE
PCB-1260 Peak 1	8.26	Baseline Smoothing	hassl	06/05/17 05:55
PCB-1260 Peak 2	8.58	Baseline Smoothing	hassl	06/05/17 05:55
PCB-1260 Peak 3	8.90	Baseline Smoothing	hassl	06/05/17 05:55
PCB-1260 Peak 4	9.68	Baseline Smoothing	hassl	06/05/17 05:55
PCB-1260 Peak 5	9.99	Baseline Smoothing	hassl	06/05/17 05:55

Lab Sample ID: STD05 240-281427/31 ICI Client Sample ID:

Date Analyzed: 06/04/17 19:51 Lab File ID: P11060431.D GC Column: CLP-1 (0.53mm ID: 0.53(mm)

COMPOUND NAME	RETENTION TIME	MANUAL INTEGRATION		
		REASON	ANALYST	DATE
PCB-1016 Peak 1	5.06	Baseline Smoothing	hassl	06/05/17 05:56
PCB-1016 Peak 2	5.52	Baseline Smoothing	hassl	06/05/17 05:56
PCB-1016 Peak 3	6.11	Baseline Smoothing	hassl	06/05/17 05:56
PCB-1016 Peak 4	6.28	Baseline Smoothing	hassl	06/05/17 05:56
PCB-1016 Peak 5	6.79	Baseline Smoothing	hassl	06/05/17 05:56

PCBS MANUAL INTEGRATION SUMMARY

Lab Name: TestAmerica Canton Job No.: 240-81698-1

SDG No.:

Instrument ID: A2HP11 Analysis Batch Number: 281427

Lab Sample ID: std1.5 1660 IC Client Sample ID:

Date Analyzed: 06/04/17 20:29 Lab File ID: P11060433.D GC Column: CLP-1 (0.53mm ID: 0.53(mm)

COMPOUND NAME	RETENTION TIME	MANUAL INTEGRATION		
		REASON	ANALYST	DATE
PCB-1016 Peak 1	5.06	Baseline Smoothing	hassl	06/05/17 05:57
PCB-1016 Peak 2	5.52	Baseline Smoothing	hassl	06/05/17 05:57
PCB-1016 Peak 3	6.11	Baseline Smoothing	hassl	06/05/17 05:57
PCB-1016 Peak 4	6.28	Baseline Smoothing	hassl	06/05/17 05:57
PCB-1016 Peak 5	6.79	Baseline Smoothing	hassl	06/05/17 05:57

Lab Sample ID: ICV 240-281427/36 Client Sample ID:

Date Analyzed: 06/04/17 21:24 Lab File ID: P11060436.D GC Column: CLP-1 (0.53mm ID: 0.53(mm)

COMPOUND NAME	RETENTION TIME	MANUAL INTEGRATION		
		REASON	ANALYST	DATE
PCB-1016 Peak 1	5.06	Baseline Smoothing	hassl	06/05/17 06:37
PCB-1016 Peak 2	5.52	Baseline Smoothing	hassl	06/05/17 06:37
PCB-1016 Peak 3	6.11	Baseline Smoothing	hassl	06/05/17 06:37
PCB-1016 Peak 4	6.28	Baseline Smoothing	hassl	06/05/17 06:37
PCB-1016 Peak 5	6.79	Baseline Smoothing	hassl	06/05/17 06:37
PCB-1260 Peak 1	8.25	Baseline Smoothing	hassl	06/05/17 06:37
PCB-1260 Peak 2	8.58	Baseline Smoothing	hassl	06/05/17 06:37
PCB-1260 Peak 3	8.90	Baseline Smoothing	hassl	06/05/17 06:37
PCB-1260 Peak 4	9.67	Baseline Smoothing	hassl	06/05/17 06:37
PCB-1260 Peak 5	9.99	Baseline Smoothing	hassl	06/05/17 06:37

PCBS MANUAL INTEGRATION SUMMARY

Lab Name: TestAmerica Canton Job No.: 240-81698-1

SDG No.:

Instrument ID: A2HP11 Analysis Batch Number: 281427

Lab Sample ID: ICV 240-281427/40 Client Sample ID:

Date Analyzed: 06/04/17 22:39 Lab File ID: P11060440.D GC Column: CLP-1 (0.53mm ID: 0.53(mm)

COMPOUND NAME	RETENTION TIME	MANUAL INTEGRATION		
		REASON	ANALYST	DATE
PCB-1232 Peak 1	5.06	Baseline Smoothing	hassl	06/05/17 06:39
PCB-1232 Peak 2	5.53	Baseline Smoothing	hassl	06/05/17 06:39
PCB-1232 Peak 3	6.11	Baseline Smoothing	hassl	06/05/17 06:39
PCB-1232 Peak 4	6.28	Baseline Smoothing	hassl	06/05/17 06:39
PCB-1232 Peak 5	6.79	Baseline Smoothing	hassl	06/05/17 06:39

Lab Sample ID: ICV 240-281427/40 Client Sample ID:

Date Analyzed: 06/04/17 22:39 Lab File ID: P11060440.D GC Column: CLP-2 (0.53mm ID: 0.53(mm)

COMPOUND NAME	RETENTION TIME	MANUAL INTEGRATION		
		REASON	ANALYST	DATE
PCB-1232 Peak 1	6.02	Baseline Smoothing	hassl	06/05/17 06:39
PCB-1232 Peak 2	6.58	Baseline Smoothing	hassl	06/05/17 06:39
PCB-1232 Peak 3	7.17	Baseline Smoothing	hassl	06/05/17 06:39
PCB-1232 Peak 4	7.34	Baseline Smoothing	hassl	06/05/17 06:39
PCB-1232 Peak 5	7.93	Baseline Smoothing	hassl	06/05/17 06:39

PCBS MANUAL INTEGRATION SUMMARY

Lab Name: TestAmerica Canton Job No.: 240-81698-1

SDG No.:

Instrument ID: A2HP11 Analysis Batch Number: 285854

Lab Sample ID: 240-81698-6 Client Sample ID:

Date Analyzed: 07/05/17 14:42 Lab File ID: P11070519.D GC Column: CLP-1 (0.53mm ID: 0.53(mm)

COMPOUND NAME	RETENTION TIME	MANUAL INTEGRATION		
		REASON	ANALYST	DATE
1-Bromo-2-nitrobenzene	3.12	Incomplete Integration	grantk	07/06/17 08:03

Lab Sample ID: 240-81698-6 Client Sample ID: WC-WGEO-062817

Date Analyzed: 07/05/17 14:42 Lab File ID: P11070519.D GC Column: CLP-2 (0.53mm ID: 0.53(mm)

COMPOUND NAME	RETENTION TIME	MANUAL INTEGRATION		
		REASON	ANALYST	DATE
PCB-1248 Peak 2	7.59	Baseline Smoothing	grantk	07/06/17 08:04
PCB-1248 Peak 3	7.91	Baseline Smoothing	grantk	07/06/17 08:04
PCB-1248 Peak 4	8.42	Baseline Smoothing	grantk	07/06/17 08:04
PCB-1248 Peak 5	9.19	Baseline Smoothing	grantk	07/06/17 08:04

Lab Sample ID: LCS 240-285524/16-A Client Sample ID:

Date Analyzed: 07/05/17 17:32 Lab File ID: P11070528.D GC Column: CLP-1 (0.53mm ID: 0.53(mm)

COMPOUND NAME	RETENTION TIME	MANUAL INTEGRATION		
		REASON	ANALYST	DATE
PCB-1016 Peak 1	5.05	Baseline Smoothing	grantk	07/06/17 08:11
PCB-1016 Peak 2	5.51	Baseline Smoothing	grantk	07/06/17 08:11
PCB-1016 Peak 3	6.10	Baseline Smoothing	grantk	07/06/17 08:11
PCB-1016 Peak 4	6.27	Baseline Smoothing	grantk	07/06/17 08:11
PCB-1016 Peak 5	6.78	Baseline Smoothing	grantk	07/06/17 08:11

PCBS MANUAL INTEGRATION SUMMARY

Lab Name: TestAmerica Canton Job No.: 240-81698-1

SDG No.:

Instrument ID: A2HP4 Analysis Batch Number: 285960

Lab Sample ID: STD05 240-285960/7 IC Client Sample ID:

Date Analyzed: 07/05/17 15:54 Lab File ID: P40705007.D GC Column: CLP-1 (0.53mm ID: 0.53(mm)

COMPOUND NAME	RETENTION TIME	MANUAL INTEGRATION		
		REASON	ANALYST	DATE
PCB-1262 Peak 1	7.06	Baseline Smoothing	hassl	07/06/17 06:12
PCB-1262 Peak 2	7.36	Baseline Smoothing	hassl	07/06/17 06:12
PCB-1262 Peak 3	7.98	Baseline Smoothing	hassl	07/06/17 06:12
PCB-1262 Peak 4	8.27	Baseline Smoothing	hassl	07/06/17 06:12
PCB-1262 Peak 5	8.55	Baseline Smoothing	hassl	07/06/17 06:12

Lab Sample ID: STD01 240-285960/17 IC Client Sample ID:

Date Analyzed: 07/05/17 19:08 Lab File ID: P40705017.D GC Column: CLP-1 (0.53mm ID: 0.53(mm)

COMPOUND NAME	RETENTION TIME	MANUAL INTEGRATION		
		REASON	ANALYST	DATE
PCB-1248 Peak 1	3.89	Baseline Smoothing	hassl	07/06/17 06:13
PCB-1248 Peak 2	5.47	Baseline Smoothing	hassl	07/06/17 06:13
PCB-1248 Peak 3	6.09	Baseline Smoothing	hassl	07/06/17 06:13
PCB-1248 Peak 4	6.38	Baseline Smoothing	hassl	07/06/17 06:13
PCB-1248 Peak 5	6.86	Baseline Smoothing	hassl	07/06/17 06:13

Lab Sample ID: STD02 240-285960/18 IC Client Sample ID:

Date Analyzed: 07/05/17 19:28 Lab File ID: P40705018.D GC Column: CLP-2 (0.53mm ID: 0.53(mm)

COMPOUND NAME	RETENTION TIME	MANUAL INTEGRATION		
		REASON	ANALYST	DATE
PCB-1248 Peak 1	4.90	Baseline Smoothing	hassl	07/06/17 06:13
PCB-1248 Peak 2	5.60	Baseline Smoothing	hassl	07/06/17 06:13
PCB-1248 Peak 3	6.47	Baseline Smoothing	hassl	07/06/17 06:13
PCB-1248 Peak 4	6.99	Baseline Smoothing	hassl	07/06/17 06:13
PCB-1248 Peak 5	7.66	Baseline Smoothing	hassl	07/06/17 06:13

PCBS MANUAL INTEGRATION SUMMARY

Lab Name: TestAmerica Canton Job No.: 240-81698-1

SDG No.:

Instrument ID: A2HP4 Analysis Batch Number: 285960

Lab Sample ID: STD15 240-285960/21 IC Client Sample ID:

Date Analyzed: 07/05/17 20:28 Lab File ID: P40705021.D GC Column: CLP-2 (0.53mm ID: 0.53(mm)

COMPOUND NAME	RETENTION TIME	MANUAL INTEGRATION		
		REASON	ANALYST	DATE
PCB-1248 Peak 1	4.91	Baseline Smoothing	hassl	07/06/17 06:14
PCB-1248 Peak 2	5.61	Baseline Smoothing	hassl	07/06/17 06:14
PCB-1248 Peak 3	6.48	Baseline Smoothing	hassl	07/06/17 06:14
PCB-1248 Peak 4	6.99	Baseline Smoothing	hassl	07/06/17 06:14
PCB-1248 Peak 5	7.67	Baseline Smoothing	hassl	07/06/17 06:14

Lab Sample ID: STD01 240-285960/29 IC Client Sample ID:

Date Analyzed: 07/05/17 23:06 Lab File ID: P40705029.D GC Column: CLP-1 (0.53mm ID: 0.53(mm)

COMPOUND NAME	RETENTION TIME	MANUAL INTEGRATION		
		REASON	ANALYST	DATE
PCB-1260 Peak 1	7.07	Baseline Smoothing	hassl	07/06/17 06:14
PCB-1260 Peak 2	7.37	Baseline Smoothing	hassl	07/06/17 06:14
PCB-1260 Peak 3	7.65	Baseline Smoothing	hassl	07/06/17 06:14
PCB-1260 Peak 4	8.28	Baseline Smoothing	hassl	07/06/17 06:14
PCB-1260 Peak 5	8.52	Baseline Smoothing	hassl	07/06/17 06:14

Lab Sample ID: STD02 240-285960/30 IC Client Sample ID:

Date Analyzed: 07/05/17 23:25 Lab File ID: P40705030.D GC Column: CLP-1 (0.53mm ID: 0.53(mm)

COMPOUND NAME	RETENTION TIME	MANUAL INTEGRATION		
		REASON	ANALYST	DATE
PCB-1260 Peak 1	7.07	Baseline Smoothing	hassl	07/06/17 06:15
PCB-1260 Peak 2	7.37	Baseline Smoothing	hassl	07/06/17 06:15
PCB-1260 Peak 3	7.65	Baseline Smoothing	hassl	07/06/17 06:15
PCB-1260 Peak 4	8.28	Baseline Smoothing	hassl	07/06/17 06:15
PCB-1260 Peak 5	8.52	Baseline Smoothing	hassl	07/06/17 06:15

PCBS MANUAL INTEGRATION SUMMARY

Lab Name: TestAmerica Canton Job No.: 240-81698-1

SDG No.:

Instrument ID: A2HP4 Analysis Batch Number: 285960

Lab Sample ID: STD1 240-285960/32 IC Client Sample ID:

Date Analyzed: 07/06/17 00:04 Lab File ID: P40705032.D GC Column: CLP-1 (0.53mm ID: 0.53(mm)

COMPOUND NAME	RETENTION TIME	MANUAL INTEGRATION		
		REASON	ANALYST	DATE
PCB-1260 Peak 1	7.07	Baseline Smoothing	hassl	07/06/17 06:15
PCB-1260 Peak 2	7.37	Baseline Smoothing	hassl	07/06/17 06:15
PCB-1260 Peak 3	7.64	Baseline Smoothing	hassl	07/06/17 06:15
PCB-1260 Peak 4	8.28	Baseline Smoothing	hassl	07/06/17 06:15
PCB-1260 Peak 5	8.52	Baseline Smoothing	hassl	07/06/17 06:15

Lab Sample ID: STD15 240-285960/33 IC Client Sample ID:

Date Analyzed: 07/06/17 00:24 Lab File ID: P40705033.D GC Column: CLP-1 (0.53mm ID: 0.53(mm)

COMPOUND NAME	RETENTION TIME	MANUAL INTEGRATION		
		REASON	ANALYST	DATE
PCB-1016 Peak 1	3.29	Baseline Smoothing	hassl	07/06/17 06:15
PCB-1016 Peak 2	3.90	Baseline Smoothing	hassl	07/06/17 06:15
PCB-1016 Peak 3	4.65	Baseline Smoothing	hassl	07/06/17 06:15
PCB-1016 Peak 4	4.85	Baseline Smoothing	hassl	07/06/17 06:15
PCB-1016 Peak 5	5.23	Baseline Smoothing	hassl	07/06/17 06:15
PCB-1260 Peak 1	7.07	Baseline Smoothing	hassl	07/06/17 06:15
PCB-1260 Peak 2	7.37	Baseline Smoothing	hassl	07/06/17 06:15
PCB-1260 Peak 3	7.64	Baseline Smoothing	hassl	07/06/17 06:15
PCB-1260 Peak 4	8.28	Baseline Smoothing	hassl	07/06/17 06:15
PCB-1260 Peak 5	8.52	Baseline Smoothing	hassl	07/06/17 06:15

PCBS MANUAL INTEGRATION SUMMARY

Lab Name: TestAmerica Canton Job No.: 240-81698-1

SDG No.:

Instrument ID: A2HP4 Analysis Batch Number: 286194

Lab Sample ID: 240-81698-5 MS Client Sample ID: WC-SGEO-062817 MS

Date Analyzed: 07/07/17 08:01 Lab File ID: P40707011.D GC Column: CLP-1 (0.53mm ID: 0.53(mm)

COMPOUND NAME	RETENTION TIME	MANUAL INTEGRATION		
		REASON	ANALYST	DATE
PCB-1016 Peak 1	3.30	Baseline Smoothing	hassl	07/07/17 10:58
PCB-1016 Peak 2	3.91	Baseline Smoothing	hassl	07/07/17 10:58
PCB-1016 Peak 3	4.66	Baseline Smoothing	hassl	07/07/17 10:58
PCB-1016 Peak 4	4.86	Baseline Smoothing	hassl	07/07/17 10:58
PCB-1016 Peak 5	5.24	Baseline Smoothing	hassl	07/07/17 10:58
PCB-1260 Peak 1	7.08	Baseline Smoothing	hassl	07/07/17 10:58
PCB-1260 Peak 2	7.37	Baseline Smoothing	hassl	07/07/17 10:58
PCB-1260 Peak 3	7.65	Baseline Smoothing	hassl	07/07/17 10:58
PCB-1260 Peak 4	8.28	Baseline Smoothing	hassl	07/07/17 10:58
PCB-1260 Peak 5	8.53	Baseline Smoothing	hassl	07/07/17 10:58

Lab Sample ID: 240-81698-5 MSD Client Sample ID: WC-SGEO-062817 MSD

Date Analyzed: 07/07/17 08:21 Lab File ID: P40707012.D GC Column: CLP-2 (0.53mm ID: 0.53(mm)

COMPOUND NAME	RETENTION TIME	MANUAL INTEGRATION		
		REASON	ANALYST	DATE
PCB-1016 Peak 1	4.23	Baseline Smoothing	hassl	07/07/17 10:59
PCB-1016 Peak 2	4.91	Baseline Smoothing	hassl	07/07/17 10:59
PCB-1016 Peak 3	5.62	Baseline Smoothing	hassl	07/07/17 10:59
PCB-1016 Peak 4	5.82	Baseline Smoothing	hassl	07/07/17 10:59
PCB-1016 Peak 5	6.48	Baseline Smoothing	hassl	07/07/17 10:59

PCBS MANUAL INTEGRATION SUMMARY

Lab Name: TestAmerica Canton Job No.: 240-81698-1

SDG No.:

Instrument ID: A2HP4 Analysis Batch Number: 286194

Lab Sample ID: LCS 240-285979/23-A Client Sample ID:

Date Analyzed: 07/07/17 13:37 Lab File ID: P40707028.D GC Column: CLP-1 (0.53mm ID: 0.53(mm)

COMPOUND NAME	RETENTION TIME	MANUAL INTEGRATION		
		REASON	ANALYST	DATE
PCB-1260 Peak 1	7.08	Isomers	hassl	07/10/17 09:49
PCB-1260 Peak 2	7.37	Isomers	hassl	07/10/17 09:49
PCB-1260 Peak 3	7.65	Isomers	hassl	07/10/17 09:49
PCB-1260 Peak 4	8.28	Isomers	hassl	07/10/17 09:49
PCB-1260 Peak 5	8.53	Isomers	hassl	07/10/17 09:49

SAMPLE SUMMARY

Client: Tetra Tech, Inc. Job Number: 240-81698-1

Lab Sample ID	Client Sample ID	Client Matrix	Date/Time Sampled	Date/Time Received
240-81698-1	TB-062817	Water	06/28/2017 0000	06/29/2017 0920
240-81698-3	WC-FSOIL-062817	Solid	06/28/2017 0840	06/29/2017 0920
240-81698-4	WC-FDCON-062817	Water	06/28/2017 0855	06/29/2017 0920
240-81698-5	WC-SGEO-062817	Solid	06/28/2017 0815	06/29/2017 0920
240-81698-6	WC-WGEO-062817	Water	06/28/2017 0825	06/29/2017 0920

EXECUTIVE SUMMARY - Detections

Client: Tetra Tech, Inc. Job Number: 240-81698-1

Lab Sample ID / Analyte	Client Sample ID	Result	Qualifier	Reporting Limit	Units	Method
240-81698-3	**WC-FSOIL-062817**					
Chlorobenzene		0.55	J	5.7	ug/Kg	8260C
Chloroform		0.30	J	5.7	ug/Kg	8260C
cis-1,2-Dichloroethene		0.54	J	5.7	ug/Kg	8260C
Trichloroethene		230		5.7	ug/Kg	8260C
Flashpoint		>200		1.00	Degrees F	1010A
Percent Solids		84.7		0.1	%	Moisture
Percent Moisture		15.3		0.1	%	Moisture
TCLP						
Arsenic		0.0050	J B	0.050	mg/L	6010B
Barium		0.33	J B	0.50	mg/L	6010B
Chromium		0.0029	J B	0.050	mg/L	6010B
Selenium		0.0067	J B	0.050	mg/L	6010B
240-81698-4	**WC-FDCON-062817**					
2-Butanone (MEK)		8.0	J B	63	ug/L	8260C
Chloroform		13		6.3	ug/L	8260C
cis-1,2-Dichloroethene		8.1		6.3	ug/L	8260C
Methyl tert-butyl ether		3.5	J	6.3	ug/L	8260C
Trichloroethene		320		6.3	ug/L	8260C
Flashpoint		>200		1.00	Degrees F	1010A
TCLP						
Barium		0.10	J B	0.50	mg/L	6010B
Chromium		0.0016	J B	0.050	mg/L	6010B
240-81698-5	**WC-SGEO-062817**					
1,2,4-Trimethylbenzene		0.37	J	5.6	ug/Kg	8260C
Acetone		5.2	J	23	ug/Kg	8260C
Chlorobenzene		2.3	J	5.6	ug/Kg	8260C
Naphthalene		1.0	J B	5.6	ug/Kg	8260C
Aroclor-1248		350		57	ug/Kg	8082A
Flashpoint		>200		1.00	Degrees F	1010A
Percent Solids		88.0		0.1	%	Moisture
Percent Moisture		12.0		0.1	%	Moisture
TCLP						
Arsenic		0.0052	J B	0.050	mg/L	6010B
Barium		0.61	B	0.50	mg/L	6010B
Cadmium		0.0014	J	0.050	mg/L	6010B
Chromium		0.0051	J B	0.050	mg/L	6010B
Lead		0.0056	J	0.050	mg/L	6010B
Selenium		0.0073	J B	0.050	mg/L	6010B

EXECUTIVE SUMMARY - Detections

Client: Tetra Tech, Inc. Job Number: 240-81698-1

Lab Sample ID / Analyte	Client Sample ID	Result	Qualifier	Reporting Limit	Units	Method
240-81698-6	**WC-WGEO-062817**					
1,2,4-Trimethylbenzene		19	J	50	ug/L	8260C
2-Butanone (MEK)		110	J	500	ug/L	8260C
Acetone		2300		500	ug/L	8260C
Toluene		130		50	ug/L	8260C
Aroclor-1248		0.86	p	0.098	ug/L	8082A
Flashpoint		>200		1.00	Degrees F	1010A
TCLP						
Barium		0.14	J B	0.50	mg/L	6010B
Chromium		0.056	B	0.050	mg/L	6010B
Selenium		0.0052	J	0.050	mg/L	6010B

METHOD SUMMARY

Client: Tetra Tech, Inc. Job Number: 240-81698-1

Description	Lab Location	Method	Preparation Method
Matrix: Solid			
Volatile Organic Compounds by GC/MS	TAL CAN	SW846 8260C	
Purge and Trap	TAL CAN		SW846 5030C
Polychlorinated Biphenyls (PCBs) by Gas Chromatography	TAL CAN	SW846 8082A	
Soxhlet Extraction	TAL CAN		SW846 3540C
Metals (ICP)	TAL CAN	SW846 6010B	
TCLP Extraction	TAL CAN		SW846 1311
Preparation, Total Metals	TAL CAN		SW846 3010A
Mercury (CVAA)	TAL CAN	SW846 7470A	
TCLP Extraction	TAL CAN		SW846 1311
Preparation, Mercury	TAL CAN		SW846 7470A
Ignitability, Pensky-Martens Closed-Cup Method	TAL CAN	SW846 1010A	
Percent Moisture	TAL CAN	EPA Moisture	
Matrix: Water			
Volatile Organic Compounds by GC/MS	TAL CAN	SW846 8260C	
Purge and Trap	TAL CAN		SW846 5030C
Polychlorinated Biphenyls (PCBs) by Gas Chromatography	TAL CAN	SW846 8082A	
Liquid-Liquid Extraction (Continuous)	TAL CAN		SW846 3520C
Metals (ICP)	TAL CAN	SW846 6010B	
TCLP Extraction	TAL CAN		SW846 1311
Preparation, Total Metals	TAL CAN		SW846 3010A
Mercury (CVAA)	TAL CAN	SW846 7470A	
TCLP Extraction	TAL CAN		SW846 1311
Preparation, Mercury	TAL CAN		SW846 7470A
Ignitability, Pensky-Martens Closed-Cup Method	TAL CAN	SW846 1010A	

Lab References:

TAL CAN = TestAmerica Canton

Method References:

EPA = US Environmental Protection Agency

SW846 = "Test Methods For Evaluating Solid Waste, Physical/Chemical Methods", Third Edition, November 1986 And Its Updates.

METHOD / ANALYST SUMMARY

Client: Tetra Tech, Inc. Job Number: 240-81698-1

Method	Analyst	Analyst ID
SW846 8260C	Bosworth, Heather M	HMB
SW846 8260C	Lata, Todd	TJL2
SW846 8082A	Grant, Katie	KMG
SW846 8082A	Hass, Lori	LSH
SW846 6010B	Counts, Karen	KLC
SW846 7470A	Nguyen, Diem	DTN
SW846 1010A	Harshman, Tom	TPH
SW846 1010A	Woodward, Bruce	BLW
EPA Moisture	Wu, Patrick	PW

Client: Tetra Tech, Inc. Job Number: 240-81698-1

Client Sample ID: **TB-062817**

Lab Sample ID: 240-81698-1 Date Sampled: 06/28/2017 0000
Client Matrix: Water Date Received: 06/29/2017 0920

8260C Volatile Organic Compounds by GC/MS

Analysis Method:	8260C	Analysis Batch:	240-285874	Instrument ID:	A3UX16
Prep Method:	5030C	Prep Batch:	N/A	Lab File ID:	UXM4244.D
Dilution:	1.0			Initial Weight/Volume:	5 mL
Analysis Date:	07/05/2017 1313			Final Weight/Volume:	5 mL
Prep Date:	07/05/2017 1313				

Analyte	Result (ug/L)	Qualifier	MDL	RL
1,1,1,2-Tetrachloroethane	0.46	U	0.46	1.0
1,1,1-Trichloroethane	0.23	U	0.23	1.0
1,1,2,2-Tetrachloroethane	0.32	U	0.32	1.0
1,1,2-Trichloro-1,2,2-trifluoroethane	0.41	U	0.41	1.0
1,1-Dichloroethane	0.25	U	0.25	1.0
1,1-Dichloroethene	0.27	U	0.27	1.0
1,1-Dichloropropene	0.28	U	0.28	1.0
1,2,3-Trichlorobenzene	0.35	U	0.35	1.0
1,2,3-Trichloropropane	0.54	U	0.54	1.0
1,2,3-Trimethylbenzene	0.22	U	0.22	5.0
1,2,4-Trichlorobenzene	0.27	U	0.27	1.0
1,2,4-Trimethylbenzene	0.24	U	0.24	1.0
1,2-Dibromo-3-Chloropropane	0.47	U	0.47	2.0
1,2-Dichlorobenzene	0.26	U	0.26	1.0
1,2-Dichloroethane	0.30	U	0.30	1.0
1,2-Dichloropropane	0.30	U	0.30	1.0
1,3-Dichlorobenzene	0.32	U	0.32	1.0
1,3-Dichloropropane	0.29	U	0.29	1.0
1,4-Dichlorobenzene	0.23	U	0.23	1.0
2,2-Dichloropropane	0.34	U	0.34	1.0
2-Butanone (MEK)	1.0	U	1.0	10
2-Chloroethyl vinyl ether	0.65	U	0.65	10
2-Chlorotoluene	0.28	U	0.28	1.0
2-Hexanone	1.2	U	1.2	10
4-Chlorotoluene	0.23	U	0.23	1.0
p-Isopropyltoluene	0.29	U	0.29	1.0
4-Methyl-2-pentanone (MIBK)	0.71	U	0.71	10
Acetone	1.8	U	1.8	10
Benzene	0.28	U	0.28	1.0
Bromobenzene	0.31	U	0.31	1.0
Bromoform	0.43	U	0.43	1.0
Bromomethane	0.42	U	0.42	1.0
Carbon disulfide	0.34	U	0.34	1.0
Carbon tetrachloride	0.35	U	0.35	1.0
Chlorobenzene	0.32	U	0.32	1.0
Dibromochloromethane	0.25	U	0.25	1.0
Chloroethane	0.41	U	0.41	1.0
Chloroform	0.31	U	0.31	1.0
Chloromethane	0.43	U	0.43	1.0
cis-1,2-Dichloroethene	0.30	U	0.30	1.0
cis-1,3-Dichloropropene	0.26	U	0.26	1.0
Dibromomethane	0.46	U	0.46	1.0
Bromochloromethane	0.47	U	0.47	1.0
Dichlorodifluoromethane	0.50	U	0.50	1.0
Bromodichloromethane	0.30	U	0.30	1.0
tert-Butyl alcohol (TBA)	4.6	U	4.6	50

Client: Tetra Tech, Inc. Job Number: 240-81698-1

Client Sample ID: **TB-062817**

Lab Sample ID: 240-81698-1 Date Sampled: 06/28/2017 0000
Client Matrix: Water Date Received: 06/29/2017 0920

8260C Volatile Organic Compounds by GC/MS

Analysis Method:	8260C	Analysis Batch:	240-285874	Instrument ID:	A3UX16
Prep Method:	5030C	Prep Batch:	N/A	Lab File ID:	UXM4244.D
Dilution:	1.0			Initial Weight/Volume:	5 mL
Analysis Date:	07/05/2017 1313			Final Weight/Volume:	5 mL
Prep Date:	07/05/2017 1313				

Analyte	Result (ug/L)	Qualifier	MDL	RL
Ethylbenzene	0.26	U	0.26	1.0
Hexachlorobutadiene	0.36	U	0.36	1.0
Diisopropyl ether	0.44	U	0.44	10
Isopropylbenzene	0.21	U	0.21	1.0
Methyl tert-butyl ether	0.27	U	0.27	1.0
Methylene Chloride	0.53	U	0.53	1.0
m-Xylene & p-Xylene	0.24	U	0.24	2.0
Naphthalene	0.25	U	0.25	1.0
n-Butylbenzene	0.21	U	0.21	1.0
N-Propylbenzene	0.45	U	0.45	1.0
o-Xylene	0.28	U	0.28	1.0
sec-Butylbenzene	0.27	U	0.27	1.0
Styrene	0.23	U	0.23	1.0
Tert-amyl methyl ether	0.29	U	0.29	5.0
Ethyl t-butyl ether	0.35	U	0.35	5.0
Tetrachloroethene	0.30	U	0.30	1.0
Toluene	0.23	U	0.23	1.0
trans-1,2-Dichloroethene	0.29	U	0.29	1.0
trans-1,3-Dichloropropene	0.31	U	0.31	1.0
Trichloroethene	0.33	U	0.33	1.0
Trichlorofluoromethane	0.50	U	0.50	1.0
Vinyl acetate	0.28	U	0.28	2.0
Vinyl chloride	0.45	U	0.45	1.0
Xylenes, Total	0.24	U	0.24	2.0
tert-Butylbenzene	0.26	U	0.26	1.0
1,2-Dibromoethane	0.23	U	0.23	1.0

Surrogate	%Rec	Qualifier	Acceptance Limits
Toluene-d8 (Surr)	104		73 - 120
Dibromofluoromethane (Surr)	89		69 - 124
4-Bromofluorobenzene (Surr)	91		69 - 120
1,2-Dichloroethane-d4 (Surr)	89		61 - 138

Client: Tetra Tech, Inc. Job Number: 240-81698-1

Client Sample ID: **WC-FSOIL-062817**

Lab Sample ID: 240-81698-3 Date Sampled: 06/28/2017 0840
Client Matrix: Solid % Moisture: 15.3 Date Received: 06/29/2017 0920

8260C Volatile Organic Compounds by GC/MS

Analysis Method:	8260C	Analysis Batch:	240-285711	Instrument ID:	A3UX8
Prep Method:	5030C	Prep Batch:	240-285712	Lab File ID:	UX81026.D
Dilution:	1.0			Initial Weight/Volume:	5.16 g
Analysis Date:	07/03/2017 0920			Final Weight/Volume:	5 mL
Prep Date:	07/03/2017 0332				

Analyte DryWt Corrected: Y	Result (ug/Kg)	Qualifier	MDL	RL
1,1,1,2-Tetrachloroethane	0.41	U	0.41	5.7
1,1,1-Trichloroethane	0.26	U	0.26	5.7
1,1,2,2-Tetrachloroethane	0.30	U	0.30	5.7
1,1,2-Trichloro-1,2,2-trifluoroethane	0.56	U	0.56	5.7
1,1-Dichloroethane	0.38	U	0.38	5.7
1,1-Dichloroethene	0.62	U	0.62	5.7
1,1-Dichloropropene	0.22	U	0.22	5.7
1,2,3-Trichlorobenzene	0.40	U	0.40	5.7
1,2,3-Trichloropropane	0.45	U	0.45	5.7
1,2,3-Trimethylbenzene	0.11	U	0.11	5.7
1,2,4-Trichlorobenzene	0.27	U	0.27	5.7
1,2,4-Trimethylbenzene	0.29	U	0.29	5.7
1,2-Dibromo-3-Chloropropane	0.78	U	0.78	11
1,2-Dichlorobenzene	0.25	U	0.25	5.7
1,2-Dichloroethane	0.33	U	0.33	5.7
1,2-Dichloropropane	0.35	U	0.35	5.7
1,3-Dichlorobenzene	0.33	U	0.33	5.7
1,3-Dichloropropane	0.26	U	0.26	5.7
1,4-Dichlorobenzene	0.40	U	0.40	5.7
2,2-Dichloropropane	0.34	U	0.34	5.7
2-Butanone (MEK)	1.5	U	1.5	23
2-Chloroethyl vinyl ether	3.2	U	3.2	57
2-Chlorotoluene	0.42	U	0.42	5.7
2-Hexanone	0.66	U	0.66	23
4-Chlorotoluene	0.27	U	0.27	5.7
p-Isopropyltoluene	0.21	U	0.21	5.7
4-Methyl-2-pentanone (MIBK)	1.0	U	1.0	23
Acetone	3.5	U	3.5	23
Benzene	0.37	U	0.37	5.7
Bromobenzene	0.31	U	0.31	5.7
Bromoform	0.46	U	0.46	5.7
Bromomethane	0.68	U	0.68	5.7
Carbon disulfide	0.24	U	0.24	5.7
Carbon tetrachloride	0.29	U	0.29	5.7
Chlorobenzene	0.55	J	0.38	5.7
Dibromochloromethane	0.34	U	0.34	5.7
Chloroethane	0.43	U	0.43	5.7
Chloroform	0.30	J	0.26	5.7
Chloromethane	0.43	U	0.43	5.7
cis-1,2-Dichloroethene	0.54	J	0.32	5.7
cis-1,3-Dichloropropene	0.30	U	0.30	5.7
Dibromomethane	0.43	U	0.43	5.7
Bromochloromethane	0.41	U	0.41	5.7
Dichlorodifluoromethane	0.40	U	0.40	5.7
Bromodichloromethane	0.38	U	0.38	5.7
tert-Butyl alcohol (TBA)	2.7	U	2.7	230

Client: Tetra Tech, Inc. Job Number: 240-81698-1

Client Sample ID: **WC-FSOIL-062817**

Lab Sample ID: 240-81698-3 Date Sampled: 06/28/2017 0840
Client Matrix: Solid % Moisture: 15.3 Date Received: 06/29/2017 0920

8260C Volatile Organic Compounds by GC/MS

Analysis Method:	8260C	Analysis Batch:	240-285711	Instrument ID:	A3UX8
Prep Method:	5030C	Prep Batch:	240-285712	Lab File ID:	UX81026.D
Dilution:	1.0			Initial Weight/Volume:	5.16 g
Analysis Date:	07/03/2017 0920			Final Weight/Volume:	5 mL
Prep Date:	07/03/2017 0332				

Analyte	DryWt Corrected: Y	Result (ug/Kg)	Qualifier	MDL	RL
Ethylbenzene		0.31	U	0.31	5.7
Hexachlorobutadiene		0.50	U	0.50	5.7
Diisopropyl ether		0.27	U	0.27	11
Isopropylbenzene		0.23	U	0.23	5.7
Methyl tert-butyl ether		0.31	U	0.31	5.7
Methylene Chloride		0.27	U	0.27	5.7
m-Xylene & p-Xylene		0.46	U	0.46	11
Naphthalene		0.38	U	0.38	5.7
n-Butylbenzene		0.29	U	0.29	5.7
N-Propylbenzene		0.32	U	0.32	5.7
o-Xylene		0.25	U	0.25	5.7
sec-Butylbenzene		0.22	U	0.22	5.7
Styrene		0.31	U	0.31	5.7
Tert-amyl methyl ether		0.24	U	0.24	5.7
Ethyl t-butyl ether		0.15	U	0.15	5.7
Tetrachloroethene		0.42	U	0.42	5.7
Toluene		0.39	U	0.39	5.7
trans-1,2-Dichloroethene		0.43	U	0.43	5.7
trans-1,3-Dichloropropene		0.24	U	0.24	5.7
Trichloroethene		230		0.47	5.7
Trichlorofluoromethane		0.27	U	0.27	5.7
Vinyl acetate		1.0	U	1.0	11
Vinyl chloride		0.32	U	0.32	5.7
Xylenes, Total		0.46	U	0.46	11
tert-Butylbenzene		0.24	U	0.24	5.7
1,2-Dibromoethane		0.40	U	0.40	5.7

Surrogate	%Rec	Qualifier	Acceptance Limits
Toluene-d8 (Surr)	96		66 - 125
Dibromofluoromethane (Surr)	86		43 - 131
4-Bromofluorobenzene (Surr)	89		61 - 132
1,2-Dichloroethane-d4 (Surr)	83		61 - 127

Client: Tetra Tech, Inc. Job Number: 240-81698-1

Client Sample ID: **WC-FDCON-062817**

Lab Sample ID: 240-81698-4 Date Sampled: 06/28/2017 0855
Client Matrix: Water Date Received: 06/29/2017 0920

8260C Volatile Organic Compounds by GC/MS

Analysis Method:	8260C	Analysis Batch:	240-285874	Instrument ID:	A3UX16
Prep Method:	5030C	Prep Batch:	N/A	Lab File ID:	UXM4245.D
Dilution:	6.25			Initial Weight/Volume:	5 mL
Analysis Date:	07/05/2017 1336			Final Weight/Volume:	5 mL
Prep Date:	07/05/2017 1336				

Analyte	Result (ug/L)	Qualifier	MDL	RL
1,1,1,2-Tetrachloroethane	2.9	U	2.9	6.3
1,1,1-Trichloroethane	1.4	U	1.4	6.3
1,1,2,2-Tetrachloroethane	2.0	U	2.0	6.3
1,1,2-Trichloro-1,2,2-trifluoroethane	2.6	U	2.6	6.3
1,1-Dichloroethane	1.6	U	1.6	6.3
1,1-Dichloroethene	1.7	U	1.7	6.3
1,1-Dichloropropene	1.8	U	1.8	6.3
1,2,3-Trichlorobenzene	2.2	U	2.2	6.3
1,2,3-Trichloropropane	3.4	U	3.4	6.3
1,2,3-Trimethylbenzene	1.4	U	1.4	31
1,2,4-Trichlorobenzene	1.7	U	1.7	6.3
1,2,4-Trimethylbenzene	1.5	U	1.5	6.3
1,2-Dibromo-3-Chloropropane	2.9	U	2.9	13
1,2-Dichlorobenzene	1.6	U	1.6	6.3
1,2-Dichloroethane	1.9	U	1.9	6.3
1,2-Dichloropropane	1.9	U	1.9	6.3
1,3-Dichlorobenzene	2.0	U	2.0	6.3
1,3-Dichloropropane	1.8	U	1.8	6.3
1,4-Dichlorobenzene	1.4	U	1.4	6.3
2,2-Dichloropropane	2.1	U	2.1	6.3
2-Butanone (MEK)	8.0	J B	6.4	63
2-Chloroethyl vinyl ether	4.1	U F1	4.1	63
2-Chlorotoluene	1.8	U	1.8	6.3
2-Hexanone	7.7	U	7.7	63
4-Chlorotoluene	1.4	U	1.4	6.3
p-Isopropyltoluene	1.8	U	1.8	6.3
4-Methyl-2-pentanone (MIBK)	4.4	U	4.4	63
Acetone	11	U	11	63
Benzene	1.8	U	1.8	6.3
Bromobenzene	1.9	U	1.9	6.3
Bromoform	2.7	U	2.7	6.3
Bromomethane	2.6	U	2.6	6.3
Carbon disulfide	2.1	U	2.1	6.3
Carbon tetrachloride	2.2	U	2.2	6.3
Chlorobenzene	2.0	U	2.0	6.3
Dibromochloromethane	1.6	U	1.6	6.3
Chloroethane	2.6	U	2.6	6.3
Chloroform	13		1.9	6.3
Chloromethane	2.7	U	2.7	6.3
cis-1,2-Dichloroethene	8.1		1.9	6.3
cis-1,3-Dichloropropene	1.6	U	1.6	6.3
Dibromomethane	2.9	U	2.9	6.3
Bromochloromethane	2.9	U	2.9	6.3
Dichlorodifluoromethane	3.1	U	3.1	6.3
Bromodichloromethane	1.9	U	1.9	6.3
tert-Butyl alcohol (TBA)	28	U	28	310

Client: Tetra Tech, Inc. Job Number: 240-81698-1

Client Sample ID: **WC-FDCON-062817**

Lab Sample ID: 240-81698-4 Date Sampled: 06/28/2017 0855
Client Matrix: Water Date Received: 06/29/2017 0920

8260C Volatile Organic Compounds by GC/MS

Analysis Method:	8260C	Analysis Batch:	240-285874	Instrument ID:	A3UX16
Prep Method:	5030C	Prep Batch:	N/A	Lab File ID:	UXM4245.D
Dilution:	6.25			Initial Weight/Volume:	5 mL
Analysis Date:	07/05/2017 1336			Final Weight/Volume:	5 mL
Prep Date:	07/05/2017 1336				

Analyte	Result (ug/L)	Qualifier	MDL	RL
Ethylbenzene	1.6	U	1.6	6.3
Hexachlorobutadiene	2.3	U	2.3	6.3
Diisopropyl ether	2.8	U	2.8	63
Isopropylbenzene	1.3	U	1.3	6.3
Methyl tert-butyl ether	3.5	J	1.7	6.3
Methylene Chloride	3.3	U	3.3	6.3
m-Xylene & p-Xylene	1.5	U	1.5	13
Naphthalene	1.6	U	1.6	6.3
n-Butylbenzene	1.3	U	1.3	6.3
N-Propylbenzene	2.8	U	2.8	6.3
o-Xylene	1.8	U	1.8	6.3
sec-Butylbenzene	1.7	U	1.7	6.3
Styrene	1.4	U	1.4	6.3
Tert-amyl methyl ether	1.8	U	1.8	31
Ethyl t-butyl ether	2.2	U	2.2	31
Tetrachloroethene	1.9	U	1.9	6.3
Toluene	1.4	U	1.4	6.3
trans-1,2-Dichloroethene	1.8	U	1.8	6.3
trans-1,3-Dichloropropene	1.9	U	1.9	6.3
Trichloroethene	320		2.1	6.3
Trichlorofluoromethane	3.1	U	3.1	6.3
Vinyl acetate	1.8	U	1.8	13
Vinyl chloride	2.8	U	2.8	6.3
Xylenes, Total	1.5	U	1.5	13
tert-Butylbenzene	1.6	U	1.6	6.3
1,2-Dibromoethane	1.4	U	1.4	6.3

Surrogate	%Rec	Qualifier	Acceptance Limits
Toluene-d8 (Surr)	106		73 - 120
Dibromofluoromethane (Surr)	87		69 - 124
4-Bromofluorobenzene (Surr)	92		69 - 120
1,2-Dichloroethane-d4 (Surr)	88		61 - 138

Client: Tetra Tech, Inc. Job Number: 240-81698-1

Client Sample ID: **WC-SGEO-062817**

Lab Sample ID: 240-81698-5 Date Sampled: 06/28/2017 0815
Client Matrix: Solid % Moisture: 12.0 Date Received: 06/29/2017 0920

8260C Volatile Organic Compounds by GC/MS

Analysis Method:	8260C	Analysis Batch:	240-285711	Instrument ID:	A3UX8
Prep Method:	5030C	Prep Batch:	240-285712	Lab File ID:	UX81027.D
Dilution:	1.0			Initial Weight/Volume:	5.03 g
Analysis Date:	07/03/2017 0942			Final Weight/Volume:	5 mL
Prep Date:	07/03/2017 0332				

Analyte DryWt Corrected: Y	Result (ug/Kg)	Qualifier	MDL	RL
1,1,1,2-Tetrachloroethane	0.41	U	0.41	5.6
1,1,1-Trichloroethane	0.26	U	0.26	5.6
1,1,2,2-Tetrachloroethane	0.29	U	0.29	5.6
1,1,2-Trichloro-1,2,2-trifluoroethane	0.55	U	0.55	5.6
1,1-Dichloroethane	0.37	U	0.37	5.6
1,1-Dichloroethene	0.61	U	0.61	5.6
1,1-Dichloropropene	0.21	U	0.21	5.6
1,2,3-Trichlorobenzene	0.40	U	0.40	5.6
1,2,3-Trichloropropane	0.44	U	0.44	5.6
1,2,3-Trimethylbenzene	0.11	U	0.11	5.6
1,2,4-Trichlorobenzene	0.27	U	0.27	5.6
1,2,4-Trimethylbenzene	0.37	J	0.28	5.6
1,2-Dibromo-3-Chloropropane	0.77	U	0.77	11
1,2-Dichlorobenzene	0.25	U	0.25	5.6
1,2-Dichloroethane	0.33	U	0.33	5.6
1,2-Dichloropropane	0.35	U	0.35	5.6
1,3-Dichlorobenzene	0.33	U	0.33	5.6
1,3-Dichloropropane	0.26	U	0.26	5.6
1,4-Dichlorobenzene	0.40	U	0.40	5.6
2,2-Dichloropropane	0.34	U	0.34	5.6
2-Butanone (MEK)	1.4	U	1.4	23
2-Chloroethyl vinyl ether	3.2	U	3.2	56
2-Chlorotoluene	0.42	U	0.42	5.6
2-Hexanone	0.66	U	0.66	23
4-Chlorotoluene	0.27	U	0.27	5.6
p-Isopropyltoluene	0.20	U	0.20	5.6
4-Methyl-2-pentanone (MIBK)	1.0	U	1.0	23
Acetone	5.2	J	3.5	23
Benzene	0.36	U	0.36	5.6
Bromobenzene	0.30	U	0.30	5.6
Bromoform	0.45	U	0.45	5.6
Bromomethane	0.67	U	0.67	5.6
Carbon disulfide	0.24	U	0.24	5.6
Carbon tetrachloride	0.28	U	0.28	5.6
Chlorobenzene	2.3	J	0.37	5.6
Dibromochloromethane	0.34	U	0.34	5.6
Chloroethane	0.43	U	0.43	5.6
Chloroform	0.26	U	0.26	5.6
Chloromethane	0.43	U	0.43	5.6
cis-1,2-Dichloroethene	0.32	U	0.32	5.6
cis-1,3-Dichloropropene	0.29	U	0.29	5.6
Dibromomethane	0.43	U	0.43	5.6
Bromochloromethane	0.41	U	0.41	5.6
Dichlorodifluoromethane	0.40	U	0.40	5.6
Bromodichloromethane	0.37	U	0.37	5.6
tert-Butyl alcohol (TBA)	2.7	U	2.7	230

Client: Tetra Tech, Inc. Job Number: 240-81698-1

Client Sample ID: **WC-SGEO-062817**

Lab Sample ID: 240-81698-5 Date Sampled: 06/28/2017 0815
Client Matrix: Solid % Moisture: 12.0 Date Received: 06/29/2017 0920

8260C Volatile Organic Compounds by GC/MS

Analysis Method:	8260C	Analysis Batch:	240-285711	Instrument ID:	A3UX8
Prep Method:	5030C	Prep Batch:	240-285712	Lab File ID:	UX81027.D
Dilution:	1.0			Initial Weight/Volume:	5.03 g
Analysis Date:	07/03/2017 0942			Final Weight/Volume:	5 mL
Prep Date:	07/03/2017 0332				

Analyte	DryWt Corrected: Y	Result (ug/Kg)	Qualifier	MDL	RL
Ethylbenzene		0.30	U	0.30	5.6
Hexachlorobutadiene		0.50	U	0.50	5.6
Diisopropyl ether		0.27	U	0.27	11
Isopropylbenzene		0.23	U	0.23	5.6
Methyl tert-butyl ether		0.30	U	0.30	5.6
Methylene Chloride		0.27	U	0.27	5.6
m-Xylene & p-Xylene		0.45	U	0.45	11
Naphthalene		1.0	J B	0.37	5.6
n-Butylbenzene		0.28	U	0.28	5.6
N-Propylbenzene		0.32	U	0.32	5.6
o-Xylene		0.25	U	0.25	5.6
sec-Butylbenzene		0.21	U	0.21	5.6
Styrene		0.30	U	0.30	5.6
Tert-amyl methyl ether		0.24	U	0.24	5.6
Ethyl t-butyl ether		0.15	U	0.15	5.6
Tetrachloroethene		0.42	U	0.42	5.6
Toluene		0.38	U	0.38	5.6
trans-1,2-Dichloroethene		0.43	U	0.43	5.6
trans-1,3-Dichloropropene		0.24	U	0.24	5.6
Trichloroethene		0.46	U	0.46	5.6
Trichlorofluoromethane		0.27	U	0.27	5.6
Vinyl acetate		0.98	U	0.98	11
Vinyl chloride		0.32	U	0.32	5.6
Xylenes, Total		0.45	U	0.45	11
tert-Butylbenzene		0.24	U	0.24	5.6
1,2-Dibromoethane		0.40	U	0.40	5.6

Surrogate	%Rec	Qualifier	Acceptance Limits
Toluene-d8 (Surr)	91		66 - 125
Dibromofluoromethane (Surr)	82		43 - 131
4-Bromofluorobenzene (Surr)	86		61 - 132
1,2-Dichloroethane-d4 (Surr)	87		61 - 127

Client: Tetra Tech, Inc. Job Number: 240-81698-1

Client Sample ID: **WC-WGEO-062817**

Lab Sample ID: 240-81698-6 Date Sampled: 06/28/2017 0825
Client Matrix: Water Date Received: 06/29/2017 0920

8260C Volatile Organic Compounds by GC/MS

Analysis Method:	8260C	Analysis Batch:	240-286045	Instrument ID:	A3UX16
Prep Method:	5030C	Prep Batch:	N/A	Lab File ID:	UXM4298.D
Dilution:	50			Initial Weight/Volume:	5 mL
Analysis Date:	07/06/2017 1358			Final Weight/Volume:	5 mL
Prep Date:	07/06/2017 1358				

Analyte	Result (ug/L)	Qualifier	MDL	RL
1,1,1,2-Tetrachloroethane	23	U	23	50
1,1,1-Trichloroethane	12	U	12	50
1,1,2,2-Tetrachloroethane	16	U	16	50
1,1,2-Trichloro-1,2,2-trifluoroethane	21	U	21	50
1,1-Dichloroethane	13	U	13	50
1,1-Dichloroethene	14	U	14	50
1,1-Dichloropropene	14	U	14	50
1,2,3-Trichlorobenzene	18	U	18	50
1,2,3-Trichloropropane	27	U	27	50
1,2,3-Trimethylbenzene	11	U	11	250
1,2,4-Trichlorobenzene	14	U	14	50
1,2,4-Trimethylbenzene	19	J	12	50
1,2-Dibromo-3-Chloropropane	24	U	24	100
1,2-Dichlorobenzene	13	U	13	50
1,2-Dichloroethane	15	U	15	50
1,2-Dichloropropane	15	U	15	50
1,3-Dichlorobenzene	16	U	16	50
1,3-Dichloropropane	15	U	15	50
1,4-Dichlorobenzene	12	U	12	50
2,2-Dichloropropane	17	U	17	50
2-Butanone (MEK)	110	J	51	500
2-Chloroethyl vinyl ether	33	U	33	500
2-Chlorotoluene	14	U	14	50
2-Hexanone	62	U	62	500
4-Chlorotoluene	12	U	12	50
p-Isopropyltoluene	15	U	15	50
4-Methyl-2-pentanone (MIBK)	36	U	36	500
Acetone	2300		88	500
Benzene	14	U	14	50
Bromobenzene	16	U	16	50
Bromoform	22	U	22	50
Bromomethane	21	U	21	50
Carbon disulfide	17	U	17	50
Carbon tetrachloride	18	U	18	50
Chlorobenzene	16	U	16	50
Dibromochloromethane	13	U	13	50
Chloroethane	21	U	21	50
Chloroform	16	U	16	50
Chloromethane	22	U	22	50
cis-1,2-Dichloroethene	15	U	15	50
cis-1,3-Dichloropropene	13	U	13	50
Dibromomethane	23	U	23	50
Bromochloromethane	24	U	24	50
Dichlorodifluoromethane	25	U	25	50
Bromodichloromethane	15	U	15	50
tert-Butyl alcohol (TBA)	230	U	230	2500

Client: Tetra Tech, Inc. Job Number: 240-81698-1

Client Sample ID: **WC-WGEO-062817**

Lab Sample ID: 240-81698-6 Date Sampled: 06/28/2017 0825
Client Matrix: Water Date Received: 06/29/2017 0920

8260C Volatile Organic Compounds by GC/MS

Analysis Method:	8260C	Analysis Batch:	240-286045	Instrument ID:	A3UX16
Prep Method:	5030C	Prep Batch:	N/A	Lab File ID:	UXM4298.D
Dilution:	50			Initial Weight/Volume:	5 mL
Analysis Date:	07/06/2017 1358			Final Weight/Volume:	5 mL
Prep Date:	07/06/2017 1358				

Analyte	Result (ug/L)	Qualifier	MDL	RL
Ethylbenzene	13	U	13	50
Hexachlorobutadiene	18	U	18	50
Diisopropyl ether	22	U	22	500
Isopropylbenzene	11	U	11	50
Methyl tert-butyl ether	14	U	14	50
Methylene Chloride	27	U	27	50
m-Xylene & p-Xylene	12	U	12	100
Naphthalene	13	U	13	50
n-Butylbenzene	11	U	11	50
N-Propylbenzene	23	U	23	50
o-Xylene	14	U	14	50
sec-Butylbenzene	14	U	14	50
Styrene	12	U	12	50
Tert-amyl methyl ether	15	U	15	250
Ethyl t-butyl ether	18	U	18	250
Tetrachloroethene	15	U	15	50
Toluene	130		12	50
trans-1,2-Dichloroethene	15	U	15	50
trans-1,3-Dichloropropene	16	U	16	50
Trichloroethene	17	U	17	50
Trichlorofluoromethane	25	U	25	50
Vinyl acetate	14	U	14	100
Vinyl chloride	23	U	23	50
Xylenes, Total	12	U	12	100
tert-Butylbenzene	13	U	13	50
1,2-Dibromoethane	12	U	12	50

Surrogate	%Rec	Qualifier	Acceptance Limits
Toluene-d8 (Surr)	99		73 - 120
Dibromofluoromethane (Surr)	86		69 - 124
4-Bromofluorobenzene (Surr)	89		69 - 120
1,2-Dichloroethane-d4 (Surr)	84		61 - 138

Client: Tetra Tech, Inc. Job Number: 240-81698-1

Client Sample ID: **WC-FSOIL-062817**

Lab Sample ID: 240-81698-3 Date Sampled: 06/28/2017 0840
Client Matrix: Solid % Moisture: 15.3 Date Received: 06/29/2017 0920

8082A Polychlorinated Biphenyls (PCBs) by Gas Chromatography

Analysis Method:	8082A	Analysis Batch:	240-286194	Instrument ID:	A2HP4
Prep Method:	3540C	Prep Batch:	240-285979	Initial Weight/Volume:	10.16 g
Dilution:	1.0			Final Weight/Volume:	10 mL
Analysis Date:	07/07/2017 0722			Injection Volume:	1 uL
Prep Date:	07/05/2017 1332			Result Type:	PRIMARY

Analyte	DryWt Corrected: Y	Result (ug/Kg)	Qualifier	MDL	RL
Aroclor-1016		28	U	28	58
Aroclor-1221		27	U	27	58
Aroclor-1232		19	U	19	58
Aroclor-1242		23	U	23	58
Aroclor-1248		20	U	20	58
Aroclor-1254		16	U	16	58
Aroclor-1260		21	U	21	58

Surrogate	%Rec	Qualifier	Acceptance Limits
Tetrachloro-m-xylene	71		14 - 128
DCB Decachlorobiphenyl	78		10 - 132

Client: Tetra Tech, Inc. Job Number: 240-81698-1

Client Sample ID: **WC-FDCON-062817**

Lab Sample ID: 240-81698-4 Date Sampled: 06/28/2017 0855
Client Matrix: Water Date Received: 06/29/2017 0920

8082A Polychlorinated Biphenyls (PCBs) by Gas Chromatography

Analysis Method:	8082A	Analysis Batch:	240-285854	Instrument ID:	A2HP11
Prep Method:	3520C	Prep Batch:	240-285524	Initial Weight/Volume:	1040 mL
Dilution:	1.0			Final Weight/Volume:	2 mL
Analysis Date:	07/05/2017 1423			Injection Volume:	1 uL
Prep Date:	06/30/2017 0917			Result Type:	PRIMARY

Analyte	Result (ug/L)	Qualifier	MDL	RL
Aroclor-1016	0.048	U	0.048	0.096
Aroclor-1221	0.087	U	0.087	0.096
Aroclor-1232	0.067	U	0.067	0.096
Aroclor-1242	0.058	U	0.058	0.096
Aroclor-1248	0.048	U	0.048	0.096
Aroclor-1254	0.029	U	0.029	0.096
Aroclor-1260	0.038	U	0.038	0.096

Surrogate	%Rec	Qualifier	Acceptance Limits
Tetrachloro-m-xylene	43		21 - 120
DCB Decachlorobiphenyl	55		10 - 120

Client: Tetra Tech, Inc. Job Number: 240-81698-1

Client Sample ID: **WC-SGEO-062817**

Lab Sample ID: 240-81698-5 Date Sampled: 06/28/2017 0815
Client Matrix: Solid % Moisture: 12.0 Date Received: 06/29/2017 0920

8082A Polychlorinated Biphenyls (PCBs) by Gas Chromatography

Analysis Method:	8082A	Analysis Batch:	240-286194	Instrument ID:	A2HP4
Prep Method:	3540C	Prep Batch:	240-285979	Initial Weight/Volume:	9.94 g
Dilution:	1.0			Final Weight/Volume:	10 mL
Analysis Date:	07/07/2017 0742			Injection Volume:	1 uL
Prep Date:	07/05/2017 1332			Result Type:	PRIMARY

Analyte	DryWt Corrected: Y	Result (ug/Kg)	Qualifier	MDL	RL
Aroclor-1016		27	U	27	57
Aroclor-1221		26	U	26	57
Aroclor-1232		18	U	18	57
Aroclor-1242		23	U	23	57
Aroclor-1248		350		19	57
Aroclor-1254		16	U	16	57
Aroclor-1260		21	U	21	57

Surrogate	%Rec	Qualifier	Acceptance Limits
Tetrachloro-m-xylene	86		14 - 128
DCB Decachlorobiphenyl	91		10 - 132

Client: Tetra Tech, Inc. Job Number: 240-81698-1

Client Sample ID: **WC-WGEO-062817**

Lab Sample ID: 240-81698-6 Date Sampled: 06/28/2017 0825
Client Matrix: Water Date Received: 06/29/2017 0920

8082A Polychlorinated Biphenyls (PCBs) by Gas Chromatography

Analysis Method:	8082A	Analysis Batch:	240-285854	Instrument ID:	A2HP11
Prep Method:	3520C	Prep Batch:	240-285524	Initial Weight/Volume:	1020 mL
Dilution:	1.0			Final Weight/Volume:	2 mL
Analysis Date:	07/05/2017 1442			Injection Volume:	1 uL
Prep Date:	06/30/2017 0917			Result Type:	PRIMARY

Analyte	Result (ug/L)	Qualifier	MDL	RL
Aroclor-1016	0.049	U	0.049	0.098
Aroclor-1221	0.088	U	0.088	0.098
Aroclor-1232	0.069	U	0.069	0.098
Aroclor-1242	0.059	U	0.059	0.098
Aroclor-1248	0.86	p	0.049	0.098
Aroclor-1254	0.029	U	0.029	0.098
Aroclor-1260	0.039	U	0.039	0.098

Surrogate	%Rec	Qualifier	Acceptance Limits
Tetrachloro-m-xylene	46		21 - 120
DCB Decachlorobiphenyl	27		10 - 120

Client: Tetra Tech, Inc. Job Number: 240-81698-1

Client Sample ID: **WC-WGEO-062817**

Lab Sample ID: 240-81698-6 Date Sampled: 06/28/2017 0825
Client Matrix: Water Date Received: 06/29/2017 0920

8082A Polychlorinated Biphenyls (PCBs) by Gas Chromatography

Analysis Method:	8082A	Analysis Batch:	240-285854	Instrument ID:	A2HP11
Prep Method:	3520C	Prep Batch:	240-285524	Initial Weight/Volume:	1020 mL
Dilution:	1.0			Final Weight/Volume:	2 mL
Analysis Date:	07/05/2017 1442			Injection Volume:	1 uL
Prep Date:	06/30/2017 0917			Result Type:	SECONDARY

Surrogate	%Rec	Qualifier	Acceptance Limits
Tetrachloro-m-xylene	49		21 - 120
DCB Decachlorobiphenyl	27		10 - 120

Client: Tetra Tech, Inc. Job Number: 240-81698-1

Client Sample ID: **WC-FSOIL-062817**

Lab Sample ID: 240-81698-3 Date Sampled: 06/28/2017 0840
Client Matrix: Solid Date Received: 06/29/2017 0920

6010B Metals (ICP)-TCLP

Analysis Method:	6010B	Analysis Batch:	240-286626	Instrument ID:	I9
Prep Method:	3010A	Prep Batch:	240-286297	Lab File ID:	I9071017B.asc
Dilution:	1.0	Leach Batch:	240-286170	Initial Weight/Volume:	50 mL
Analysis Date:	07/11/2017 0009			Final Weight/Volume:	50 mL
Prep Date:	07/07/2017 1400				
Leach Date:	07/06/2017 1625				

Analyte	DryWt Corrected: N	Result (mg/L)	Qualifier	MDL	RL
Arsenic		0.0050	J B	0.0033	0.050
Barium		0.33	J B	0.0024	0.50
Cadmium		0.00029	U	0.00029	0.050
Chromium		0.0029	J B	0.00055	0.050
Lead		0.0019	U	0.0019	0.050
Selenium		0.0067	J B	0.0051	0.050
Silver		0.00092	U	0.00092	0.050

7470A Mercury (CVAA)-TCLP

Analysis Method:	7470A	Analysis Batch:	240-286634	Instrument ID:	H3
Prep Method:	7470A	Prep Batch:	240-286299	Lab File ID:	0710A17H3.CSV
Dilution:	1.0	Leach Batch:	240-286170	Initial Weight/Volume:	50 mL
Analysis Date:	07/10/2017 1328			Final Weight/Volume:	50 mL
Prep Date:	07/07/2017 1400				
Leach Date:	07/06/2017 1625				

Analyte	DryWt Corrected: N	Result (mg/L)	Qualifier	MDL	RL
Mercury		0.00013	U	0.00013	0.0020

Client: Tetra Tech, Inc. Job Number: 240-81698-1

Client Sample ID: **WC-FDCON-062817**

Lab Sample ID: 240-81698-4 Date Sampled: 06/28/2017 0855
Client Matrix: Water Date Received: 06/29/2017 0920

6010B Metals (ICP)-TCLP

Analysis Method:	6010B	Analysis Batch:	240-286324	Instrument ID:	I12
Prep Method:	3010A	Prep Batch:	240-286066	Lab File ID:	I12070717A.asc
Dilution:	1.0	Leach Batch:	240-286004	Initial Weight/Volume:	50 mL
Analysis Date:	07/07/2017 1434			Final Weight/Volume:	50 mL
Prep Date:	07/06/2017 1400				
Leach Date:	07/05/2017 1520				

Analyte	Result (mg/L)	Qualifier	MDL	RL
Arsenic	0.0033	U	0.0033	0.050
Barium	0.10	J B	0.0024	0.50
Cadmium	0.00029	U	0.00029	0.050
Chromium	0.0016	J B	0.00055	0.050
Lead	0.0019	U	0.0019	0.050
Selenium	0.0051	U	0.0051	0.050
Silver	0.00092	U	0.00092	0.050

7470A Mercury (CVAA)-TCLP

Analysis Method:	7470A	Analysis Batch:	240-286335	Instrument ID:	H3
Prep Method:	7470A	Prep Batch:	240-286067	Lab File ID:	0707A17H3.CSV
Dilution:	1.0	Leach Batch:	240-286004	Initial Weight/Volume:	50 mL
Analysis Date:	07/07/2017 1343			Final Weight/Volume:	50 mL
Prep Date:	07/06/2017 1400				
Leach Date:	07/05/2017 1520				

Analyte	Result (mg/L)	Qualifier	MDL	RL
Mercury	0.00013	U	0.00013	0.0020

Client: Tetra Tech, Inc. Job Number: 240-81698-1

Client Sample ID: **WC-SGEO-062817**

Lab Sample ID: 240-81698-5 Date Sampled: 06/28/2017 0815
Client Matrix: Solid Date Received: 06/29/2017 0920

6010B Metals (ICP)-TCLP

Analysis Method:	6010B	Analysis Batch:	240-286626	Instrument ID:	I9
Prep Method:	3010A	Prep Batch:	240-286297	Lab File ID:	I9071017B.asc
Dilution:	1.0	Leach Batch:	240-286170	Initial Weight/Volume:	50 mL
Analysis Date:	07/11/2017 0022			Final Weight/Volume:	50 mL
Prep Date:	07/07/2017 1400				
Leach Date:	07/06/2017 1625				

Analyte	DryWt Corrected: N	Result (mg/L)	Qualifier	MDL	RL
Arsenic		0.0052	J B	0.0033	0.050
Barium		0.61	B	0.0024	0.50
Cadmium		0.0014	J	0.00029	0.050
Chromium		0.0051	J B	0.00055	0.050
Lead		0.0056	J	0.0019	0.050
Selenium		0.0073	J B	0.0051	0.050
Silver		0.00092	U	0.00092	0.050

7470A Mercury (CVAA)-TCLP

Analysis Method:	7470A	Analysis Batch:	240-286634	Instrument ID:	H3
Prep Method:	7470A	Prep Batch:	240-286299	Lab File ID:	0710A17H3.CSV
Dilution:	1.0	Leach Batch:	240-286170	Initial Weight/Volume:	50 mL
Analysis Date:	07/10/2017 1330			Final Weight/Volume:	50 mL
Prep Date:	07/07/2017 1400				
Leach Date:	07/06/2017 1625				

Analyte	DryWt Corrected: N	Result (mg/L)	Qualifier	MDL	RL
Mercury		0.00013	U	0.00013	0.0020

Client: Tetra Tech, Inc. Job Number: 240-81698-1

Client Sample ID: **WC-WGEO-062817**

Lab Sample ID: 240-81698-6 Date Sampled: 06/28/2017 0825
Client Matrix: Water Date Received: 06/29/2017 0920

6010B Metals (ICP)-TCLP

Analysis Method:	6010B	Analysis Batch:	240-286324	Instrument ID:	I12
Prep Method:	3010A	Prep Batch:	240-286066	Lab File ID:	I12070717A.asc
Dilution:	1.0	Leach Batch:	240-286004	Initial Weight/Volume:	50 mL
Analysis Date:	07/07/2017 1438			Final Weight/Volume:	50 mL
Prep Date:	07/06/2017 1400				
Leach Date:	07/05/2017 1520				

Analyte	Result (mg/L)	Qualifier	MDL	RL
Arsenic	0.0033	U	0.0033	0.050
Barium	0.14	J B	0.0024	0.50
Cadmium	0.00029	U	0.00029	0.050
Chromium	0.056	B	0.00055	0.050
Lead	0.0019	U	0.0019	0.050
Selenium	0.0052	J	0.0051	0.050
Silver	0.00092	U	0.00092	0.050

7470A Mercury (CVAA)-TCLP

Analysis Method:	7470A	Analysis Batch:	240-286335	Instrument ID:	H3
Prep Method:	7470A	Prep Batch:	240-286067	Lab File ID:	0707A17H3.CSV
Dilution:	1.0	Leach Batch:	240-286004	Initial Weight/Volume:	50 mL
Analysis Date:	07/07/2017 1345			Final Weight/Volume:	50 mL
Prep Date:	07/06/2017 1400				
Leach Date:	07/05/2017 1520				

Analyte	Result (mg/L)	Qualifier	MDL	RL
Mercury	0.00013	U	0.00013	0.0020

General Chemistry

Client Sample ID: **WC-FSOIL-062817**

Lab Sample ID: 240-81698-3 Date Sampled: 06/28/2017 0840
Client Matrix: Solid Date Received: 06/29/2017 0920

Analyte	Result	Qual	Units	MDL	RL	Dil	Method
Flashpoint	>200		Degrees F	1.00	1.00	1.0	1010A
Analysis Batch: 240-286224	Analysis Date: 07/07/2017 1123					DryWt Corrected: N	
Percent Solids	84.7		%	0.1	0.1	1.0	Moisture
Analysis Batch: 240-285512	Analysis Date: 06/30/2017 0830					DryWt Corrected: N	
Percent Moisture	15.3		%	0.1	0.1	1.0	Moisture
Analysis Batch: 240-285512	Analysis Date: 06/30/2017 0830					DryWt Corrected: N	

General Chemistry

Client Sample ID: **WC-FDCON-062817**

Lab Sample ID: 240-81698-4 Date Sampled: 06/28/2017 0855
Client Matrix: Water Date Received: 06/29/2017 0920

Analyte	Result	Qual	Units	MDL	RL	Dil	Method
Flashpoint	>200		Degrees F	1.00	1.00	1.0	1010A

Analysis Batch: 240-286734 Analysis Date: 07/11/2017 1453

General Chemistry

Client Sample ID: **WC-SGEO-062817**

Lab Sample ID: 240-81698-5 Date Sampled: 06/28/2017 0815
Client Matrix: Solid Date Received: 06/29/2017 0920

Analyte	Result	Qual	Units	MDL	RL	Dil	Method
Flashpoint	>200		Degrees F	1.00	1.00	1.0	1010A
Analysis Batch: 240-286224	Analysis Date: 07/07/2017 1152					DryWt Corrected: N	
Percent Solids	88.0		%	0.1	0.1	1.0	Moisture
Analysis Batch: 240-285512	Analysis Date: 06/30/2017 0830					DryWt Corrected: N	
Percent Moisture	12.0		%	0.1	0.1	1.0	Moisture
Analysis Batch: 240-285512	Analysis Date: 06/30/2017 0830					DryWt Corrected: N	

General Chemistry

Client Sample ID: **WC-WGEO-062817**

Lab Sample ID: 240-81698-6 Date Sampled: 06/28/2017 0825
Client Matrix: Water Date Received: 06/29/2017 0920

Analyte	Result	Qual	Units	MDL	RL	Dil	Method
Flashpoint	>200		Degrees F	1.00	1.00	1.0	1010A

Analysis Batch: 240-286734 Analysis Date: 07/11/2017 1512

Client: Tetra Tech, Inc.

Job Number: 240-81698-1

Surrogate Recovery Report

8260C Volatile Organic Compounds by GC/MS

Client Matrix: Solid

Lab Sample ID	Client Sample ID	DBFM %Rec	DCA %Rec	TOL %Rec	BFB %Rec
240-81698-3	WC-FSOIL-062817	86	83	96	89
240-81698-5	WC-SGEO-062817	82	87	91	86
MB 240-285711/7		91	85	94	89
LCS 240-285711/6		94	86	95	89
LCS 240-285711/8		90	86	91	89
240-81733-B-18-D MS		59	85	97	87
240-81733-B-18-E MSD		70	88	96	93

Surrogate	Acceptance Limits
DBFM = Dibromofluoromethane (Surr)	43-131
DCA = 1,2-Dichloroethane-d4 (Surr)	61-127
TOL = Toluene-d8 (Surr)	66-125
BFB = 4-Bromofluorobenzene (Surr)	61-132

Client: Tetra Tech, Inc.

Job Number: 240-81698-1

Surrogate Recovery Report

8260C Volatile Organic Compounds by GC/MS

Client Matrix: Water

Lab Sample ID	Client Sample ID	DBFM %Rec	DCA %Rec	TOL %Rec	BFB %Rec
240-81698-1	TB-062817	89	89	104	91
240-81698-4	WC-FDCON-062817	87	88	106	92
240-81698-6	WC-WGEO-062817	86	84	99	89
MB 240-285874/6		91	90	108	95
MB 240-286045/6		85	86	103	90
LCS 240-285874/3		88	88	106	96
LCS 240-286045/3		83	85	106	95
240-81698-4 MS	WC-FDCON-062817 MS	86	86	107	96
240-81718-E-1 MS		87	90	107	96
240-81698-4 MSD	WC-FDCON-062817 MSD	85	86	106	93
240-81718-H-1 MSD		88	87	109	98

Surrogate	Acceptance Limits
DBFM = Dibromofluoromethane (Surr)	69-124
DCA = 1,2-Dichloroethane-d4 (Surr)	61-138
TOL = Toluene-d8 (Surr)	73-120
BFB = 4-Bromofluorobenzene (Surr)	69-120

Client: Tetra Tech, Inc.

Job Number: 240-81698-1

Surrogate Recovery Report

8082A Polychlorinated Biphenyls (PCBs) by Gas Chromatography

Client Matrix: Solid

Lab Sample ID	Client Sample ID	TCX2 %Rec	DCBP2 %Rec
240-81698-3	WC-FSOIL-062817	71	78
240-81698-5	WC-SGEO-062817	86	91
MB 240-285979/22-A		72	83
LCS 240-285979/23-A		63	72
240-81698-5 MS	WC-SGEO-062817 MS	101	108
240-81698-5 MSD	WC-SGEO-062817 MSD	90	117

Surrogate	Acceptance Limits
TCX = Tetrachloro-m-xylene	14-128
DCBP = DCB Decachlorobiphenyl	10-132

Client: Tetra Tech, Inc.

Job Number: 240-81698-1

Surrogate Recovery Report

8082A Polychlorinated Biphenyls (PCBs) by Gas Chromatography

Client Matrix: Water

Lab Sample ID	Client Sample ID	TCX1 %Rec	TCX2 %Rec	DCBP1 %Rec	DCBP2 %Rec
240-81698-4	WC-FDCON-062817	43		55	
240-81698-6	WC-WGEO-062817	46	49	27	27
MB 240-285524/15-A		59		68	
LCS 240-285524/16-A		54		68	

Surrogate	Acceptance Limits
TCX = Tetrachloro-m-xylene	21-120
DCBP = DCB Decachlorobiphenyl	10-120

Client: Tetra Tech, Inc. Job Number: 240-81698-1

Method Blank - Batch: 240-285711 **Method: 8260C**
Preparation: N/A

Lab Sample ID:	MB 240-285711/7	Analysis Batch:	240-285711	Instrument ID:	A3UX8
Client Matrix:	Solid	Prep Batch:	N/A	Lab File ID:	UX81010.D
Dilution:	1.0	Leach Batch:	N/A	Initial Weight/Volume:	5 g
Analysis Date:	07/03/2017 0331	Units:	ug/Kg	Final Weight/Volume:	5 mL
Prep Date:	N/A				
Leach Date:	N/A				

Analyte	Result	Qual	MDL	RL
1,1,1,2-Tetrachloroethane	0.36	U	0.36	5.0
1,1,1-Trichloroethane	0.23	U	0.23	5.0
1,1,2,2-Tetrachloroethane	0.26	U	0.26	5.0
1,1,2-Trichloro-1,2,2-trifluoroethane	0.49	U	0.49	5.0
1,1-Dichloroethane	0.33	U	0.33	5.0
1,1-Dichloroethene	0.54	U	0.54	5.0
1,1-Dichloropropene	0.19	U	0.19	5.0
1,2,3-Trichlorobenzene	0.946	J	0.35	5.0
1,2,3-Trichloropropane	0.39	U	0.39	5.0
1,2,3-Trimethylbenzene	0.10	U	0.10	5.0
1,2,4-Trichlorobenzene	0.762	J	0.24	5.0
1,2,4-Trimethylbenzene	0.25	U	0.25	5.0
1,2-Dibromo-3-Chloropropane	0.68	U	0.68	10
1,2-Dichlorobenzene	0.221	J	0.22	5.0
1,2-Dichloroethane	0.29	U	0.29	5.0
1,2-Dichloropropane	0.31	U	0.31	5.0
1,3-Dichlorobenzene	0.29	U	0.29	5.0
1,3-Dichloropropane	0.23	U	0.23	5.0
1,4-Dichlorobenzene	0.35	U	0.35	5.0
2,2-Dichloropropane	0.30	U	0.30	5.0
2-Butanone (MEK)	1.3	U	1.3	20
2-Chloroethyl vinyl ether	2.8	U	2.8	50
2-Chlorotoluene	0.37	U	0.37	5.0
2-Hexanone	0.726	J	0.58	20
4-Chlorotoluene	0.24	U	0.24	5.0
p-Isopropyltoluene	0.18	U	0.18	5.0
4-Methyl-2-pentanone (MIBK)	0.89	U	0.89	20
Acetone	3.1	U	3.1	20
Benzene	0.32	U	0.32	5.0
Bromobenzene	0.27	U	0.27	5.0
Bromoform	0.40	U	0.40	5.0
Bromomethane	0.59	U	0.59	5.0
Carbon disulfide	0.21	U	0.21	5.0
Carbon tetrachloride	0.25	U	0.25	5.0
Chlorobenzene	0.33	U	0.33	5.0
Dibromochloromethane	0.30	U	0.30	5.0
Chloroethane	0.38	U	0.38	5.0
Chloroform	0.23	U	0.23	5.0
Chloromethane	0.38	U	0.38	5.0
cis-1,2-Dichloroethene	0.28	U	0.28	5.0
cis-1,3-Dichloropropene	0.26	U	0.26	5.0
Dibromomethane	0.38	U	0.38	5.0
Bromochloromethane	0.36	U	0.36	5.0
Dichlorodifluoromethane	0.35	U	0.35	5.0
Bromodichloromethane	0.33	U	0.33	5.0

Client: Tetra Tech, Inc. Job Number: 240-81698-1

Method Blank - Batch: 240-285711

Method: 8260C
Preparation: N/A

Lab Sample ID:	MB 240-285711/7	Analysis Batch:	240-285711	Instrument ID:	A3UX8
Client Matrix:	Solid	Prep Batch:	N/A	Lab File ID:	UX81010.D
Dilution:	1.0	Leach Batch:	N/A	Initial Weight/Volume:	5 g
Analysis Date:	07/03/2017 0331	Units:	ug/Kg	Final Weight/Volume:	5 mL
Prep Date:	N/A				
Leach Date:	N/A				

Analyte	Result	Qual	MDL	RL
tert-Butyl alcohol (TBA)	2.4	U	2.4	200
Ethylbenzene	0.27	U	0.27	5.0
Hexachlorobutadiene	0.526	J	0.44	5.0
Diisopropyl ether	0.24	U	0.24	10
Isopropylbenzene	0.20	U	0.20	5.0
Methyl tert-butyl ether	0.27	U	0.27	5.0
Methylene Chloride	0.24	U	0.24	5.0
m-Xylene & p-Xylene	0.40	U	0.40	10
Naphthalene	0.844	J	0.33	5.0
n-Butylbenzene	0.25	U	0.25	5.0
N-Propylbenzene	0.28	U	0.28	5.0
o-Xylene	0.22	U	0.22	5.0
sec-Butylbenzene	0.19	U	0.19	5.0
Styrene	0.27	U	0.27	5.0
Tert-amyl methyl ether	0.21	U	0.21	5.0
Ethyl t-butyl ether	0.13	U	0.13	5.0
Tetrachloroethene	0.37	U	0.37	5.0
Toluene	0.34	U	0.34	5.0
trans-1,2-Dichloroethene	0.38	U	0.38	5.0
trans-1,3-Dichloropropene	0.21	U	0.21	5.0
Trichloroethene	0.41	U	0.41	5.0
Trichlorofluoromethane	0.24	U	0.24	5.0
Vinyl acetate	0.87	U	0.87	10
Vinyl chloride	0.28	U	0.28	5.0
Xylenes, Total	0.40	U	0.40	10
tert-Butylbenzene	0.21	U	0.21	5.0
1,2-Dibromoethane	0.35	U	0.35	5.0

Surrogate	% Rec	Acceptance Limits
Toluene-d8 (Surr)	94	66 - 125
Dibromofluoromethane (Surr)	91	43 - 131
4-Bromofluorobenzene (Surr)	89	61 - 132
1,2-Dichloroethane-d4 (Surr)	85	61 - 127

Client: Tetra Tech, Inc. Job Number: 240-81698-1

Lab Control Sample - Batch: 240-285711

Method: 8260C
Preparation: N/A

Lab Sample ID:	LCS 240-285711/6	Analysis Batch:	240-285711	Instrument ID:	A3UX8
Client Matrix:	Solid	Prep Batch:	N/A	Lab File ID:	UX81009.D
Dilution:	1.0	Leach Batch:	N/A	Initial Weight/Volume:	5 g
Analysis Date:	07/03/2017 0310	Units:	ug/Kg	Final Weight/Volume:	5 mL
Prep Date:	N/A				
Leach Date:	N/A				

Analyte	Spike Amount	Result	% Rec.	Limit	Qual
1,1,1,2-Tetrachloroethane	50.0	54.6	109	64 - 130	
1,1,1-Trichloroethane	50.0	58.1	116	60 - 136	
1,1,2,2-Tetrachloroethane	50.0	51.1	102	78 - 120	
1,1,2-Trichloro-1,2,2-trifluoroethane	50.0	56.2	112	64 - 125	
1,1-Dichloroethane	50.0	51.7	103	72 - 120	
1,1-Dichloroethene	50.0	54.7	109	58 - 130	
1,1-Dichloropropene	50.0	53.4	107	70 - 126	
1,2,3-Trichlorobenzene	50.0	45.8	92	59 - 121	
1,2,3-Trichloropropane	50.0	53.3	107	79 - 120	
1,2,4-Trichlorobenzene	50.0	48.4	97	60 - 124	
1,2,4-Trimethylbenzene	50.0	53.1	106	78 - 122	
1,2-Dibromo-3-Chloropropane	50.0	50.9	102	40 - 133	
1,2-Dichlorobenzene	50.0	48.5	97	75 - 120	
1,2-Dichloroethane	50.0	48.3	97	71 - 120	
1,2-Dichloropropane	50.0	50.3	101	78 - 122	
1,3-Dichlorobenzene	50.0	49.8	100	72 - 120	
1,3-Dichloropropane	50.0	48.6	97	78 - 120	
1,4-Dichlorobenzene	50.0	47.0	94	71 - 120	
2,2-Dichloropropane	50.0	58.9	118	40 - 150	
2-Butanone (MEK)	100	99.9	100	51 - 120	
2-Chloroethyl vinyl ether	50.0	50.8	102	61 - 143	
2-Chlorotoluene	50.0	50.4	101	78 - 120	
2-Hexanone	100	96.7	97	52 - 129	
4-Chlorotoluene	50.0	49.2	98	75 - 120	
p-Isopropyltoluene	50.0	56.2	112	76 - 126	
4-Methyl-2-pentanone (MIBK)	100	99.6	100	65 - 131	
Acetone	100	106	106	24 - 125	
Benzene	50.0	50.2	100	77 - 120	
Bromobenzene	50.0	48.4	97	75 - 120	
Bromoform	50.0	48.5	97	40 - 140	
Bromomethane	50.0	54.7	109	10 - 153	
Carbon disulfide	50.0	59.6	119	17 - 163	
Carbon tetrachloride	50.0	58.5	117	43 - 144	
Chlorobenzene	50.0	49.5	99	76 - 120	
Dibromochloromethane	50.0	53.7	107	46 - 125	
Chloroethane	50.0	54.4	109	10 - 166	
Chloroform	50.0	50.1	100	74 - 120	
Chloromethane	50.0	54.0	108	41 - 124	
cis-1,2-Dichloroethene	50.0	50.5	101	78 - 120	
cis-1,3-Dichloropropene	50.0	50.3	101	66 - 126	
Dibromomethane	50.0	50.1	100	76 - 120	
Bromochloromethane	50.0	49.9	100	76 - 120	
Dichlorodifluoromethane	50.0	56.0	112	15 - 127	
Bromodichloromethane	50.0	55.0	110	61 - 132	
tert-Butyl alcohol (TBA)	500	471	94	39 - 141	
Ethylbenzene	50.0	51.6	103	76 - 120	

Client: Tetra Tech, Inc. Job Number: 240-81698-1

Lab Control Sample - Batch: 240-285711

Method: 8260C
Preparation: N/A

Lab Sample ID:	LCS 240-285711/6	Analysis Batch:	240-285711	Instrument ID:	A3UX8
Client Matrix:	Solid	Prep Batch:	N/A	Lab File ID:	UX81009.D
Dilution:	1.0	Leach Batch:	N/A	Initial Weight/Volume:	5 g
Analysis Date:	07/03/2017 0310	Units:	ug/Kg	Final Weight/Volume:	5 mL
Prep Date:	N/A				
Leach Date:	N/A				

Analyte	Spike Amount	Result	% Rec.	Limit	Qual
Hexachlorobutadiene	50.0	49.3	99	62 - 133	
Isopropylbenzene	50.0	54.5	109	76 - 124	
Methyl tert-butyl ether	50.0	49.9	100	68 - 129	
Methylene Chloride	50.0	50.9	102	64 - 126	
m-Xylene & p-Xylene	50.0	52.1	104	78 - 120	
Naphthalene	50.0	48.9	98	68 - 123	
n-Butylbenzene	50.0	55.7	111	72 - 130	
N-Propylbenzene	50.0	54.7	109	77 - 126	
o-Xylene	50.0	51.6	103	77 - 120	
sec-Butylbenzene	50.0	54.7	109	78 - 125	
Styrene	50.0	49.6	99	80 - 120	
Tetrachloroethene	50.0	54.1	108	68 - 122	
Toluene	50.0	51.1	102	74 - 120	
trans-1,2-Dichloroethene	50.0	55.8	112	74 - 124	
trans-1,3-Dichloropropene	50.0	46.7	93	55 - 121	
Trichloroethene	50.0	52.3	105	73 - 123	
Trichlorofluoromethane	50.0	58.1	116	28 - 152	
Vinyl acetate	50.0	52.4	105	36 - 132	
Vinyl chloride	50.0	53.7	107	49 - 131	
Xylenes, Total	100	104	104	78 - 120	
tert-Butylbenzene	50.0	53.9	108	75 - 125	
1,2-Dibromoethane	50.0	50.5	101	80 - 120	

Surrogate	% Rec	Acceptance Limits
Toluene-d8 (Surr)	95	66 - 125
Dibromofluoromethane (Surr)	94	43 - 131
4-Bromofluorobenzene (Surr)	89	61 - 132
1,2-Dichloroethane-d4 (Surr)	86	61 - 127

Surrogate	% Rec	Acceptance Limits
Toluene-d8 (Surr)	91	66 - 125
Dibromofluoromethane (Surr)	90	43 - 131
4-Bromofluorobenzene (Surr)	89	61 - 132
1,2-Dichloroethane-d4 (Surr)	86	61 - 127

Client: Tetra Tech, Inc. Job Number: 240-81698-1

Matrix Spike/
Matrix Spike Duplicate Recovery Report - Batch: 240-285712

Method: 8260C
Preparation: 5030C

MS Lab Sample ID:	240-81733-B-18-D MS	Analysis Batch:	240-285711	Instrument ID:	A3UX8
Client Matrix:	Solid	Prep Batch:	240-285712	Lab File ID:	UX81023.D
Dilution:	1.0	Leach Batch:	N/A	Initial Weight/Volume:	5.08 g
Analysis Date:	07/03/2017 0815			Final Weight/Volume:	5 mL
Prep Date:	07/03/2017 0332				5 mL
Leach Date:	N/A				

MSD Lab Sample ID:	240-81733-B-18-E MSD	Analysis Batch:	240-285711	Instrument ID:	A3UX8
Client Matrix:	Solid	Prep Batch:	240-285712	Lab File ID:	UX81024.D
Dilution:	1.0	Leach Batch:	N/A	Initial Weight/Volume:	5.40 g
Analysis Date:	07/03/2017 0837			Final Weight/Volume:	5 mL
Prep Date:	07/03/2017 0332				5 mL
Leach Date:	N/A				

	% Rec.						
Analyte	MS	MSD	Limit	RPD	RPD Limit	MS Qual	MSD Qual
1,1,1-Trichloroethane	84	72	33 - 130	21	40		
1,1,2,2-Tetrachloroethane	3	2	16 - 157	45	40	J F1	J F1 F2
1,1,2-Trichloro-1,2,2-trifluoroethane	84	73	26 - 130	20	40		
1,1-Dichloroethane	82	71	41 - 122	20	40		
1,1-Dichloroethene	93	81	30 - 139	19	40		
1,2,4-Trichlorobenzene	35	30	10 - 120	22	40		
1,2,4-Trimethylbenzene	70	52	10 - 146	34	40		
1,2-Dibromo-3-Chloropropane	46	38	10 - 128	27	40		J
1,2-Dichlorobenzene	59	49	10 - 120	26	40		
1,2-Dichloroethane	78	69	35 - 122	19	40		
1,2-Dichloropropane	79	72	38 - 130	15	40		
1,3-Dichlorobenzene	59	47	10 - 120	30	40		
1,4-Dichlorobenzene	56	44	10 - 120	30	40		
2-Butanone (MEK)	81	67	29 - 127	26	40		
2-Hexanone	112	87	21 - 136	31	40		
4-Methyl-2-pentanone (MIBK)	86	71	16 - 164	25	40		
Acetone	93	80	15 - 127	21	40		
Benzene	77	69	33 - 127	17	40		
Bromoform	55	53	10 - 120	11	40		
Bromomethane	81	72	13 - 138	18	40		
Carbon disulfide	68	57	15 - 131	23	40		
Carbon tetrachloride	74	65	17 - 127	18	40		
Chlorobenzene	68	58	15 - 122	21	40		
Dibromochloromethane	62	57	19 - 120	16	40		
Chloroethane	85	75	15 - 148	18	40		
Chloroform	77	68	41 - 121	18	40		
Chloromethane	86	79	33 - 122	15	40		
cis-1,2-Dichloroethene	78	68	46 - 120	19	40		
cis-1,3-Dichloropropene	64	55	13 - 127	22	40		
Dichlorodifluoromethane	86	75	10 - 126	20	40		
Bromodichloromethane	69	61	22 - 127	18	40		
Ethylbenzene	67	56	18 - 126	22	40		
Isopropylbenzene	67	58	10 - 128	21	40		

Client: Tetra Tech, Inc. Job Number: 240-81698-1

Matrix Spike/
Matrix Spike Duplicate Recovery Report - Batch: 240-285712

Method: 8260C
Preparation: 5030C

MS Lab Sample ID:	240-81733-B-18-D MS	Analysis Batch:	240-285711	Instrument ID:	A3UX8
Client Matrix:	Solid	Prep Batch:	240-285712	Lab File ID:	UX81023.D
Dilution:	1.0	Leach Batch:	N/A	Initial Weight/Volume:	5.08 g
Analysis Date:	07/03/2017 0815			Final Weight/Volume:	5 mL
Prep Date:	07/03/2017 0332				5 mL
Leach Date:	N/A				

MSD Lab Sample ID:	240-81733-B-18-E MSD	Analysis Batch:	240-285711	Instrument ID:	A3UX8
Client Matrix:	Solid	Prep Batch:	240-285712	Lab File ID:	UX81024.D
Dilution:	1.0	Leach Batch:	N/A	Initial Weight/Volume:	5.40 g
Analysis Date:	07/03/2017 0837			Final Weight/Volume:	5 mL
Prep Date:	07/03/2017 0332				5 mL
Leach Date:	N/A				

Analyte	% Rec. MS	% Rec. MSD	Limit	RPD	RPD Limit	MS Qual	MSD Qual
Methyl tert-butyl ether	85	74	49 - 134	20	40		
Methylene Chloride	84	72	34 - 134	22	40		
m-Xylene & p-Xylene	70	58	10 - 136	23	40		
n-Butylbenzene	54	41	10 - 120	32	40		
N-Propylbenzene	72	54	10 - 146	35	40		
o-Xylene	71	61	17 - 128	22	40		
sec-Butylbenzene	68	53	10 - 132	32	40		
Styrene	61	52	10 - 128	21	40		
Tetrachloroethene	69	61	17 - 126	18	40		
Toluene	76	64	29 - 127	23	40		
trans-1,2-Dichloroethene	86	71	32 - 134	25	40		
trans-1,3-Dichloropropene	56	49	11 - 120	19	40		
Trichloroethene	127	111	10 - 160	19	40		
Trichlorofluoromethane	83	74	24 - 137	17	40		
Vinyl chloride	87	76	31 - 134	18	40		
Xylenes, Total	70	60	10 - 137	23	40		
tert-Butylbenzene	78	59	10 - 143	33	40		
1,2-Dibromoethane	72	65	25 - 137	16	40		

Surrogate	MS % Rec	MSD % Rec	Acceptance Limits
Toluene-d8 (Surr)	97	96	66 - 125
Dibromofluoromethane (Surr)	59	70	43 - 131
4-Bromofluorobenzene (Surr)	87	93	61 - 132
1,2-Dichloroethane-d4 (Surr)	85	88	61 - 127

Client: Tetra Tech, Inc. Job Number: 240-81698-1

Matrix Spike/
Matrix Spike Duplicate Recovery Report - Batch: 240-285712

Method: 8260C
Preparation: 5030C

MS Lab Sample ID:	240-81733-B-18-D MS	Units: ug/Kg	MSD Lab Sample ID:	240-81733-B-18-E MSD	
Client Matrix:	Solid		Client Matrix:	Solid	
Dilution:	1.0		Dilution:	1.0	
Analysis Date:	07/03/2017 0815		Analysis Date:	07/03/2017 0837	
Prep Date:	07/03/2017 0332		Prep Date:	07/03/2017 0332	
Leach Date:	N/A		Leach Date:	N/A	

Analyte	Sample Result/Qual		MS Spike Amount	MSD Spike Amount	MS Result/Qual		MSD Result/Qual	
1,1,1-Trichloroethane	0.24	U	26.7	25.1	22.3		18.1	
1,1,2,2-Tetrachloroethane	0.27	U	26.7	25.1	0.695	J F1	0.442	J F1 F
1,1,2-Trichloro-1,2,2-trifluoroethane	0.50	U	26.7	25.1	22.4		18.4	
1,1-Dichloroethane	0.34	U	26.7	25.1	21.9		17.8	
1,1-Dichloroethene	0.55	U	26.7	25.1	24.8		20.4	
1,2,4-Trichlorobenzene	0.25	U	26.7	25.1	9.47		7.62	
1,2,4-Trimethylbenzene	0.41	J	26.7	25.1	19.1		13.6	
1,2-Dibromo-3-Chloropropane	0.70	U	26.7	25.1	12.4		9.46	J
1,2-Dichlorobenzene	0.23	U	26.7	25.1	15.9		12.2	
1,2-Dichloroethane	0.30	U	26.7	25.1	21.0		17.3	
1,2-Dichloropropane	0.32	U	26.7	25.1	21.2		18.1	
1,3-Dichlorobenzene	0.30	U	26.7	25.1	15.9		11.8	
1,4-Dichlorobenzene	0.36	U	26.7	25.1	15.1		11.1	
2-Butanone (MEK)	1.3	U	53.4	50.2	43.5		33.6	
2-Hexanone	0.59	U	53.4	50.2	60.0		43.7	
4-Methyl-2-pentanone (MIBK)	0.91	U	53.4	50.2	45.9		35.8	
Acetone	3.1	U	53.4	50.2	49.4		40.2	
Benzene	0.33	U	26.7	25.1	20.6		17.4	
Bromoform	0.41	U	26.7	25.1	14.8		13.3	
Bromomethane	0.60	U	26.7	25.1	21.6		18.1	
Carbon disulfide	0.21	U	26.7	25.1	18.2		14.4	
Carbon tetrachloride	0.26	U	26.7	25.1	19.6		16.3	
Chlorobenzene	0.34	U	26.7	25.1	18.1		14.6	
Dibromochloromethane	0.31	U	26.7	25.1	16.7		14.2	
Chloroethane	0.39	U	26.7	25.1	22.6		18.8	
Chloroform	0.24	U	26.7	25.1	20.5		17.0	
Chloromethane	0.39	U	26.7	25.1	23.1		19.8	
cis-1,2-Dichloroethene	0.29	U	26.7	25.1	20.8		17.2	
cis-1,3-Dichloropropene	0.27	U	26.7	25.1	17.1		13.7	
Dichlorodifluoromethane	0.36	U	26.7	25.1	23.0		18.9	
Bromodichloromethane	0.34	U	26.7	25.1	18.4		15.3	
Ethylbenzene	0.28	U	26.7	25.1	17.8		14.2	
Isopropylbenzene	0.20	U	26.7	25.1	18.0		14.5	
Methyl tert-butyl ether	0.28	U	26.7	25.1	22.6		18.5	
Methylene Chloride	0.25	U	26.7	25.1	22.5		18.0	
m-Xylene & p-Xylene	0.41	U	26.7	25.1	18.6		14.7	
n-Butylbenzene	0.26	U	26.7	25.1	14.3		10.4	
N-Propylbenzene	0.29	U	26.7	25.1	19.3		13.6	
o-Xylene	0.23	U	26.7	25.1	19.0		15.2	
sec-Butylbenzene	0.19	U	26.7	25.1	18.2		13.2	
Styrene	0.28	U	26.7	25.1	16.2		13.2	
Tetrachloroethene	0.38	U	26.7	25.1	18.3		15.3	
Toluene	0.35	U	26.7	25.1	20.2		16.0	

Client: Tetra Tech, Inc.

Job Number: 240-81698-1

Matrix Spike/
Matrix Spike Duplicate Recovery Report - Batch: 240-285712

Method: 8260C
Preparation: 5030C

MS Lab Sample ID:	240-81733-B-18-D MS	Units:	ug/Kg
Client Matrix:	Solid		
Dilution:	1.0		
Analysis Date:	07/03/2017 0815		
Prep Date:	07/03/2017 0332		
Leach Date:	N/A		

MSD Lab Sample ID:	240-81733-B-18-E MSD
Client Matrix:	Solid
Dilution:	1.0
Analysis Date:	07/03/2017 0837
Prep Date:	07/03/2017 0332
Leach Date:	N/A

Analyte	Sample Result/Qual		MS Spike Amount	MSD Spike Amount	MS Result/Qual	MSD Result/Qual
trans-1,2-Dichloroethene	0.39	U	26.7	25.1	22.9	17.9
trans-1,3-Dichloropropene	0.21	U	26.7	25.1	15.0	12.3
Trichloroethene	0.42	U	26.7	25.1	33.9	27.9
Trichlorofluoromethane	0.25	U	26.7	25.1	22.1	18.7
Vinyl chloride	0.29	U	26.7	25.1	23.1	19.2
Xylenes, Total	0.41	U	53.4	50.2	37.6	29.9
tert-Butylbenzene	0.21	U	26.7	25.1	20.8	14.9
1,2-Dibromoethane	0.36	U	26.7	25.1	19.2	16.4

Client: Tetra Tech, Inc. Job Number: 240-81698-1

Method Blank - Batch: 240-285874

Method: 8260C
Preparation: 5030C

Lab Sample ID:	MB 240-285874/6	Analysis Batch:	240-285874	Instrument ID:	A3UX16
Client Matrix:	Water	Prep Batch:	N/A	Lab File ID:	UXM4232.D
Dilution:	1.0	Leach Batch:	N/A	Initial Weight/Volume:	5 mL
Analysis Date:	07/05/2017 0832	Units:	ug/L	Final Weight/Volume:	5 mL
Prep Date:	07/05/2017 0832				
Leach Date:	N/A				

Analyte	Result	Qual	MDL	RL
1,1,1,2-Tetrachloroethane	0.46	U	0.46	1.0
1,1,1-Trichloroethane	0.23	U	0.23	1.0
1,1,2,2-Tetrachloroethane	0.32	U	0.32	1.0
1,1,2-Trichloro-1,2,2-trifluoroethane	0.41	U	0.41	1.0
1,1-Dichloroethane	0.25	U	0.25	1.0
1,1-Dichloroethene	0.27	U	0.27	1.0
1,1-Dichloropropene	0.28	U	0.28	1.0
1,2,3-Trichlorobenzene	0.35	U	0.35	1.0
1,2,3-Trichloropropane	0.54	U	0.54	1.0
1,2,3-Trimethylbenzene	0.22	U	0.22	5.0
1,2,4-Trichlorobenzene	0.27	U	0.27	1.0
1,2,4-Trimethylbenzene	0.24	U	0.24	1.0
1,2-Dibromo-3-Chloropropane	0.47	U	0.47	2.0
1,2-Dichlorobenzene	0.26	U	0.26	1.0
1,2-Dichloroethane	0.30	U	0.30	1.0
1,2-Dichloropropane	0.30	U	0.30	1.0
1,3-Dichlorobenzene	0.32	U	0.32	1.0
1,3-Dichloropropane	0.29	U	0.29	1.0
1,4-Dichlorobenzene	0.23	U	0.23	1.0
2,2-Dichloropropane	0.34	U	0.34	1.0
2-Butanone (MEK)	1.80	J	1.0	10
2-Chloroethyl vinyl ether	0.65	U	0.65	10
2-Chlorotoluene	0.28	U	0.28	1.0
2-Hexanone	1.2	U	1.2	10
4-Chlorotoluene	0.23	U	0.23	1.0
p-Isopropyltoluene	0.29	U	0.29	1.0
4-Methyl-2-pentanone (MIBK)	0.71	U	0.71	10
Acetone	1.8	U	1.8	10
Benzene	0.28	U	0.28	1.0
Bromobenzene	0.31	U	0.31	1.0
Bromoform	0.43	U	0.43	1.0
Bromomethane	0.42	U	0.42	1.0
Carbon disulfide	0.34	U	0.34	1.0
Carbon tetrachloride	0.35	U	0.35	1.0
Chlorobenzene	0.32	U	0.32	1.0
Dibromochloromethane	0.25	U	0.25	1.0
Chloroethane	0.41	U	0.41	1.0
Chloroform	0.31	U	0.31	1.0
Chloromethane	0.43	U	0.43	1.0
cis-1,2-Dichloroethene	0.30	U	0.30	1.0
cis-1,3-Dichloropropene	0.26	U	0.26	1.0
Dibromomethane	0.46	U	0.46	1.0
Bromochloromethane	0.47	U	0.47	1.0
Dichlorodifluoromethane	0.50	U	0.50	1.0
Bromodichloromethane	0.30	U	0.30	1.0

Client: Tetra Tech, Inc. Job Number: 240-81698-1

Method Blank - Batch: 240-285874

Method: 8260C
Preparation: 5030C

Lab Sample ID:	MB 240-285874/6	Analysis Batch:	240-285874	Instrument ID:	A3UX16
Client Matrix:	Water	Prep Batch:	N/A	Lab File ID:	UXM4232.D
Dilution:	1.0	Leach Batch:	N/A	Initial Weight/Volume:	5 mL
Analysis Date:	07/05/2017 0832	Units:	ug/L	Final Weight/Volume:	5 mL
Prep Date:	07/05/2017 0832				
Leach Date:	N/A				

Analyte	Result	Qual	MDL	RL
tert-Butyl alcohol (TBA)	4.6	U	4.6	50
Ethylbenzene	0.26	U	0.26	1.0
Hexachlorobutadiene	0.36	U	0.36	1.0
Diisopropyl ether	0.44	U	0.44	10
Isopropylbenzene	0.21	U	0.21	1.0
Methyl tert-butyl ether	0.27	U	0.27	1.0
Methylene Chloride	0.53	U	0.53	1.0
m-Xylene & p-Xylene	0.24	U	0.24	2.0
Naphthalene	0.25	U	0.25	1.0
n-Butylbenzene	0.21	U	0.21	1.0
N-Propylbenzene	0.45	U	0.45	1.0
o-Xylene	0.28	U	0.28	1.0
sec-Butylbenzene	0.27	U	0.27	1.0
Styrene	0.23	U	0.23	1.0
Tert-amyl methyl ether	0.29	U	0.29	5.0
Ethyl t-butyl ether	0.35	U	0.35	5.0
Tetrachloroethene	0.30	U	0.30	1.0
Toluene	0.23	U	0.23	1.0
trans-1,2-Dichloroethene	0.29	U	0.29	1.0
trans-1,3-Dichloropropene	0.31	U	0.31	1.0
Trichloroethene	0.33	U	0.33	1.0
Trichlorofluoromethane	0.50	U	0.50	1.0
Vinyl acetate	0.28	U	0.28	2.0
Vinyl chloride	0.45	U	0.45	1.0
Xylenes, Total	0.24	U	0.24	2.0
tert-Butylbenzene	0.26	U	0.26	1.0
1,2-Dibromoethane	0.23	U	0.23	1.0

Surrogate	% Rec	Acceptance Limits
Toluene-d8 (Surr)	108	73 - 120
Dibromofluoromethane (Surr)	91	69 - 124
4-Bromofluorobenzene (Surr)	95	69 - 120
1,2-Dichloroethane-d4 (Surr)	90	61 - 138

Client: Tetra Tech, Inc. Job Number: 240-81698-1

Lab Control Sample - Batch: 240-285874

Method: 8260C
Preparation: 5030C

Lab Sample ID:	LCS 240-285874/3	Analysis Batch:	240-285874	Instrument ID:	A3UX16
Client Matrix:	Water	Prep Batch:	N/A	Lab File ID:	UXM4229.D
Dilution:	1.0	Leach Batch:	N/A	Initial Weight/Volume:	5 mL
Analysis Date:	07/05/2017 0720	Units:	ug/L	Final Weight/Volume:	5 mL
Prep Date:	07/05/2017 0720				
Leach Date:	N/A				

Analyte	Spike Amount	Result	% Rec.	Limit	Qual
1,1,1,2-Tetrachloroethane	20.0	18.7	93	73 - 136	
1,1,1-Trichloroethane	20.0	17.1	86	64 - 147	
1,1,2,2-Tetrachloroethane	20.0	22.7	113	58 - 122	
1,1,2-Trichloro-1,2,2-trifluoroethane	20.0	18.9	95	65 - 144	
1,1-Dichloroethane	20.0	18.4	92	74 - 120	
1,1-Dichloroethene	20.0	17.3	86	65 - 127	
1,1-Dichloropropene	20.0	19.4	97	80 - 122	
1,2,3-Trichlorobenzene	20.0	20.6	103	31 - 144	
1,2,3-Trichloropropane	20.0	23.3	117	53 - 134	
1,2,4-Trichlorobenzene	20.0	19.4	97	34 - 141	
1,2,4-Trimethylbenzene	20.0	20.5	102	80 - 120	
1,2-Dibromo-3-Chloropropane	20.0	19.7	99	50 - 130	
1,2-Dichlorobenzene	20.0	20.3	102	80 - 120	
1,2-Dichloroethane	20.0	17.9	90	68 - 133	
1,2-Dichloropropane	20.0	20.3	102	78 - 127	
1,3-Dichlorobenzene	20.0	19.8	99	80 - 120	
1,3-Dichloropropane	20.0	22.1	110	71 - 124	
1,4-Dichlorobenzene	20.0	19.8	99	80 - 120	
2,2-Dichloropropane	20.0	18.1	91	32 - 178	
2-Butanone (MEK)	40.0	38.5	96	43 - 149	
2-Chloroethyl vinyl ether	20.0	16.9	85	58 - 123	
2-Chlorotoluene	20.0	21.5	107	80 - 120	
2-Hexanone	40.0	42.1	105	28 - 169	
4-Chlorotoluene	20.0	22.0	110	79 - 120	
p-Isopropyltoluene	20.0	20.3	101	78 - 125	
4-Methyl-2-pentanone (MIBK)	40.0	38.5	96	53 - 144	
Acetone	40.0	27.7	69	35 - 131	
Benzene	20.0	18.9	94	79 - 120	
Bromobenzene	20.0	20.7	103	73 - 120	
Bromoform	20.0	17.9	89	55 - 145	
Bromomethane	20.0	16.4	82	17 - 158	
Carbon disulfide	20.0	17.8	89	49 - 141	
Carbon tetrachloride	20.0	16.6	83	55 - 171	
Chlorobenzene	20.0	20.0	100	80 - 120	
Dibromochloromethane	20.0	19.4	97	64 - 129	
Chloroethane	20.0	19.0	95	10 - 149	
Chloroform	20.0	17.2	86	80 - 120	
Chloromethane	20.0	16.3	81	59 - 124	
cis-1,2-Dichloroethene	20.0	17.4	87	77 - 120	
cis-1,3-Dichloropropene	20.0	18.9	95	75 - 120	
Dibromomethane	20.0	17.3	87	80 - 120	
Bromochloromethane	20.0	18.0	90	78 - 120	
Dichlorodifluoromethane	20.0	14.8	74	42 - 141	
Bromodichloromethane	20.0	17.6	88	79 - 125	
tert-Butyl alcohol (TBA)	200	189	95	52 - 136	
Ethylbenzene	20.0	20.3	102	80 - 120	

Client: Tetra Tech, Inc. Job Number: 240-81698-1

Lab Control Sample - Batch: 240-285874

Method: 8260C
Preparation: 5030C

Lab Sample ID:	LCS 240-285874/3	Analysis Batch:	240-285874	Instrument ID:	A3UX16
Client Matrix:	Water	Prep Batch:	N/A	Lab File ID:	UXM4229.D
Dilution:	1.0	Leach Batch:	N/A	Initial Weight/Volume:	5 mL
Analysis Date:	07/05/2017 0720	Units:	ug/L	Final Weight/Volume:	5 mL
Prep Date:	07/05/2017 0720				
Leach Date:	N/A				

Analyte	Spike Amount	Result	% Rec.	Limit	Qual
Hexachlorobutadiene	20.0	18.0	90	36 - 146	
Isopropylbenzene	20.0	19.0	95	80 - 128	
Methyl tert-butyl ether	20.0	17.5	87	73 - 120	
Methylene Chloride	20.0	17.0	85	64 - 140	
m-Xylene & p-Xylene	20.0	19.7	99	80 - 120	
Naphthalene	20.0	20.6	103	31 - 127	
n-Butylbenzene	20.0	20.2	101	60 - 137	
N-Propylbenzene	20.0	21.9	109	76 - 120	
o-Xylene	20.0	19.4	97	80 - 120	
sec-Butylbenzene	20.0	20.4	102	76 - 124	
Styrene	20.0	19.7	99	80 - 121	
Tetrachloroethene	20.0	20.3	101	80 - 122	
Toluene	20.0	21.1	105	78 - 120	
trans-1,2-Dichloroethene	20.0	18.2	91	74 - 124	
trans-1,3-Dichloropropene	20.0	20.0	100	67 - 120	
Trichloroethene	20.0	17.7	89	76 - 124	
Trichlorofluoromethane	20.0	15.0	75	27 - 176	
Vinyl acetate	20.0	22.1	110	42 - 141	
Vinyl chloride	20.0	17.2	86	65 - 124	
Xylenes, Total	40.0	39.1	98	80 - 120	
tert-Butylbenzene	20.0	20.2	101	79 - 120	
1,2-Dibromoethane	20.0	20.8	104	80 - 120	

Surrogate	% Rec	Acceptance Limits
Toluene-d8 (Surr)	106	73 - 120
Dibromofluoromethane (Surr)	88	69 - 124
4-Bromofluorobenzene (Surr)	96	69 - 120
1,2-Dichloroethane-d4 (Surr)	88	61 - 138

Client: Tetra Tech, Inc. Job Number: 240-81698-1

Matrix Spike/
Matrix Spike Duplicate Recovery Report - Batch: 240-285874

Method: 8260C
Preparation: 5030C

MS Lab Sample ID:	240-81698-4	Analysis Batch:	240-285874	Instrument ID:	A3UX16
Client Matrix:	Water	Prep Batch:	N/A	Lab File ID:	UXM4254.D
Dilution:	6.25	Leach Batch:	N/A	Initial Weight/Volume:	5 mL
Analysis Date:	07/05/2017 1705			Final Weight/Volume:	5 mL
Prep Date:	07/05/2017 1705				5 mL
Leach Date:	N/A				

MSD Lab Sample ID:	240-81698-4	Analysis Batch:	240-285874	Instrument ID:	A3UX16
Client Matrix:	Water	Prep Batch:	N/A	Lab File ID:	UXM4255.D
Dilution:	6.25	Leach Batch:	N/A	Initial Weight/Volume:	5 mL
Analysis Date:	07/05/2017 1728			Final Weight/Volume:	5 mL
Prep Date:	07/05/2017 1728				5 mL
Leach Date:	N/A				

	% Rec.						
Analyte	MS	MSD	Limit	RPD	RPD Limit	MS Qual	MSD Qual
1,1,1,2-Tetrachloroethane	93	90	67 - 142	3	18		
1,1,1-Trichloroethane	85	83	57 - 156	2	13		
1,1,2,2-Tetrachloroethane	113	110	51 - 123	3	17		
1,1,2-Trichloro-1,2,2-trifluoroethane	89	90	58 - 137	1	35		
1,1-Dichloroethane	91	89	69 - 122	2	11		
1,1-Dichloroethene	88	85	62 - 127	3	14		
1,1-Dichloropropene	94	91	55 - 136	3	35		
1,2,3-Trichlorobenzene	90	90	40 - 139	0	35		
1,2,3-Trichloropropane	110	109	41 - 152	1	12		
1,2,4-Trichlorobenzene	84	85	26 - 138	1	35		
1,2,4-Trimethylbenzene	96	95	64 - 120	1	22		
1,2-Dibromo-3-Chloropropane	93	88	48 - 130	6	31		
1,2-Dichlorobenzene	97	95	70 - 120	2	19		
1,2-Dichloroethane	88	85	64 - 138	3	11		
1,2-Dichloropropane	98	96	72 - 131	2	12		
1,3-Dichlorobenzene	95	92	71 - 120	3	18		
1,3-Dichloropropane	104	103	58 - 137	1	35		
1,4-Dichlorobenzene	92	92	72 - 120	0	17		
2,2-Dichloropropane	80	81	34 - 153	2	35		
2-Butanone (MEK)	86	88	34 - 153	2	23		
2-Chloroethyl vinyl ether	0	0	10 - 120	NC	35	U F1	U F1
2-Chlorotoluene	100	99	52 - 134	1	35		
2-Hexanone	98	99	21 - 184	0	12		
4-Chlorotoluene	100	97	52 - 133	3	35		
p-Isopropyltoluene	92	90	70 - 120	3	22		
4-Methyl-2-pentanone (MIBK)	91	90	53 - 147	2	16		
Acetone	69	70	19 - 133	1	35		
Benzene	92	90	69 - 127	2	10		
Bromobenzene	98	96	59 - 131	2	35		
Bromoform	88	86	61 - 135	2	13		
Bromomethane	76	80	10 - 148	4	35		
Carbon disulfide	88	87	46 - 143	0	18		
Carbon tetrachloride	80	80	53 - 175	0	17		

Client: Tetra Tech, Inc. Job Number: 240-81698-1

Matrix Spike/
Matrix Spike Duplicate Recovery Report - Batch: 240-285874

Method: 8260C
Preparation: 5030C

MS Lab Sample ID:	240-81698-4	Analysis Batch:	240-285874	Instrument ID:	A3UX16
Client Matrix:	Water	Prep Batch:	N/A	Lab File ID:	UXM4254.D
Dilution:	6.25	Leach Batch:	N/A	Initial Weight/Volume:	5 mL
Analysis Date:	07/05/2017 1705			Final Weight/Volume:	5 mL
Prep Date:	07/05/2017 1705				5 mL
Leach Date:	N/A				

MSD Lab Sample ID:	240-81698-4	Analysis Batch:	240-285874	Instrument ID:	A3UX16
Client Matrix:	Water	Prep Batch:	N/A	Lab File ID:	UXM4255.D
Dilution:	6.25	Leach Batch:	N/A	Initial Weight/Volume:	5 mL
Analysis Date:	07/05/2017 1728			Final Weight/Volume:	5 mL
Prep Date:	07/05/2017 1728				5 mL
Leach Date:	N/A				

	% Rec.						
Analyte	MS	MSD	Limit	RPD	RPD Limit	MS Qual	MSD Qual
Chlorobenzene	97	93	76 - 120	4	12		
Dibromochloromethane	95	94	62 - 131	1	15		
Chloroethane	88	91	10 - 141	3	35		
Chloroform	84	83	74 - 125	1	11		
Chloromethane	77	79	34 - 127	2	25		
cis-1,2-Dichloroethene	86	84	69 - 127	2	11		
cis-1,3-Dichloropropene	85	84	68 - 120	0	13		
Dibromomethane	82	82	73 - 120	0	16		
Bromochloromethane	85	88	66 - 132	4	15		
Dichlorodifluoromethane	79	75	45 - 130	4	34		
Bromodichloromethane	84	86	75 - 128	2	13		
tert-Butyl alcohol (TBA)	82	83	70 - 130	0	35		
Ethylbenzene	98	95	72 - 121	4	15		
Hexachlorobutadiene	70	76	30 - 134	8	35		
Isopropylbenzene	89	86	70 - 132	4	16		
Methyl tert-butyl ether	82	83	67 - 125	1	12		
Methylene Chloride	83	84	52 - 137	1	12		
m-Xylene & p-Xylene	97	92	70 - 121	6	15		
Naphthalene	91	93	28 - 150	2	35		
n-Butylbenzene	89	89	38 - 133	0	35		
N-Propylbenzene	102	98	50 - 134	4	35		
o-Xylene	93	92	71 - 125	2	15		
sec-Butylbenzene	93	91	43 - 133	3	35		
Styrene	94	92	74 - 125	2	14		
Tetrachloroethene	96	93	69 - 126	3	18		
Toluene	102	100	69 - 125	2	14		
trans-1,2-Dichloroethene	90	88	66 - 131	3	11		
trans-1,3-Dichloropropene	92	92	59 - 120	1	14		
Trichloroethene	72	69	68 - 129	1	12	E	E
Trichlorofluoromethane	79	78	28 - 172	1	26		
Vinyl acetate	102	102	51 - 134	0	12		
Vinyl chloride	87	87	55 - 123	0	12		
Xylenes, Total	95	92	71 - 122	4	14		

Client: Tetra Tech, Inc.

Job Number: 240-81698-1

Matrix Spike/
Matrix Spike Duplicate Recovery Report - Batch: 240-285874

Method: 8260C
Preparation: 5030C

MS Lab Sample ID:	240-81698-4	Analysis Batch:	240-285874	Instrument ID:	A3UX16
Client Matrix:	Water	Prep Batch:	N/A	Lab File ID:	UXM4254.D
Dilution:	6.25	Leach Batch:	N/A	Initial Weight/Volume:	5 mL
Analysis Date:	07/05/2017 1705			Final Weight/Volume:	5 mL
Prep Date:	07/05/2017 1705				5 mL
Leach Date:	N/A				

MSD Lab Sample ID:	240-81698-4	Analysis Batch:	240-285874	Instrument ID:	A3UX16
Client Matrix:	Water	Prep Batch:	N/A	Lab File ID:	UXM4255.D
Dilution:	6.25	Leach Batch:	N/A	Initial Weight/Volume:	5 mL
Analysis Date:	07/05/2017 1728			Final Weight/Volume:	5 mL
Prep Date:	07/05/2017 1728				5 mL
Leach Date:	N/A				

	% Rec.						
Analyte	MS	MSD	Limit	RPD	RPD Limit	MS Qual	MSD Qual
tert-Butylbenzene	93	91	48 - 131	2	35		
1,2-Dibromoethane	100	99	73 - 121	1	12		

Surrogate	MS % Rec	MSD % Rec	Acceptance Limits
Toluene-d8 (Surr)	107	106	73 - 120
Dibromofluoromethane (Surr)	86	85	69 - 124
4-Bromofluorobenzene (Surr)	96	93	69 - 120
1,2-Dichloroethane-d4 (Surr)	86	86	61 - 138

Client: Tetra Tech, Inc. Job Number: 240-81698-1

Matrix Spike/
Matrix Spike Duplicate Recovery Report - Batch: 240-285874

Method: 8260C
Preparation: 5030C

MS Lab Sample ID:	240-81698-4	Units: ug/L		MSD Lab Sample ID:	240-81698-4
Client Matrix:	Water			Client Matrix:	Water
Dilution:	6.25			Dilution:	6.25
Analysis Date:	07/05/2017 1705			Analysis Date:	07/05/2017 1728
Prep Date:	07/05/2017 1705			Prep Date:	07/05/2017 1728
Leach Date:	N/A			Leach Date:	N/A

Analyte	Sample Result/Qual		MS Spike Amount	MSD Spike Amount	MS Result/Qual		MSD Result/Qual	
1,1,1,2-Tetrachloroethane	2.9	U	125	125	116		112	
1,1,1-Trichloroethane	1.4	U	125	125	106		104	
1,1,2,2-Tetrachloroethane	2.0	U	125	125	141		137	
1,1,2-Trichloro-1,2,2-trifluoroethane	2.6	U	125	125	111		112	
1,1-Dichloroethane	1.6	U	125	125	114		112	
1,1-Dichloroethene	1.7	U	125	125	109		106	
1,1-Dichloropropene	1.8	U	125	125	117		113	
1,2,3-Trichlorobenzene	2.2	U	125	125	112		112	
1,2,3-Trichloropropane	3.4	U	125	125	138		137	
1,2,4-Trichlorobenzene	1.7	U	125	125	105		106	
1,2,4-Trimethylbenzene	1.5	U	125	125	121		119	
1,2-Dibromo-3-Chloropropane	2.9	U	125	125	117		110	
1,2-Dichlorobenzene	1.6	U	125	125	121		119	
1,2-Dichloroethane	1.9	U	125	125	109		106	
1,2-Dichloropropane	1.9	U	125	125	123		120	
1,3-Dichlorobenzene	2.0	U	125	125	118		115	
1,3-Dichloropropane	1.8	U	125	125	130		129	
1,4-Dichlorobenzene	1.4	U	125	125	115		115	
2,2-Dichloropropane	2.1	U	125	125	99.5		102	
2-Butanone (MEK)	8.0	J	250	250	224		228	
2-Chloroethyl vinyl ether	4.1	U	125	125	4.1	U F1	4.1	U F1
2-Chlorotoluene	1.8	U	125	125	126		124	
2-Hexanone	7.7	U	250	250	246		247	
4-Chlorotoluene	1.4	U	125	125	125		122	
p-Isopropyltoluene	1.8	U	125	125	115		112	
4-Methyl-2-pentanone (MIBK)	4.4	U	250	250	229		225	
Acetone	11	U	250	250	173		175	
Benzene	1.8	U	125	125	116		113	
Bromobenzene	1.9	U	125	125	122		120	
Bromoform	2.7	U	125	125	110		107	
Bromomethane	2.6	U	125	125	95.6		99.6	
Carbon disulfide	2.1	U	125	125	109		109	
Carbon tetrachloride	2.2	U	125	125	100		99.8	
Chlorobenzene	2.0	U	125	125	121		116	
Dibromochloromethane	1.6	U	125	125	119		118	
Chloroethane	2.6	U	125	125	110		114	
Chloroform	13		125	125	118		116	
Chloromethane	2.7	U	125	125	96.8		98.4	
cis-1,2-Dichloroethene	8.1		125	125	115		113	
cis-1,3-Dichloropropene	1.6	U	125	125	106		105	
Dibromomethane	2.9	U	125	125	103		102	
Bromochloromethane	2.9	U	125	125	106		110	
Dichlorodifluoromethane	3.1	U	125	125	98.2		93.9	

Client: Tetra Tech, Inc.

Job Number: 240-81698-1

Matrix Spike/
Matrix Spike Duplicate Recovery Report - Batch: 240-285874

Method: 8260C
Preparation: 5030C

MS Lab Sample ID:	240-81698-4	Units:	ug/L	MSD Lab Sample ID:	240-81698-4
Client Matrix:	Water			Client Matrix:	Water
Dilution:	6.25			Dilution:	6.25
Analysis Date:	07/05/2017 1705			Analysis Date:	07/05/2017 1728
Prep Date:	07/05/2017 1705			Prep Date:	07/05/2017 1728
Leach Date:	N/A			Leach Date:	N/A

Analyte	Sample Result/Qual		MS Spike Amount	MSD Spike Amount	MS Result/Qual		MSD Result/Qual	
Bromodichloromethane	1.9	U	125	125	105		107	
tert-Butyl alcohol (TBA)	28	U	1250	1250	1030		1030	
Ethylbenzene	1.6	U	125	125	123		118	
Hexachlorobutadiene	2.3	U	125	125	88.1		95.4	
Isopropylbenzene	1.3	U	125	125	111		108	
Methyl tert-butyl ether	3.5	J	125	125	106		107	
Methylene Chloride	3.3	U	125	125	103		105	
m-Xylene & p-Xylene	1.5	U	125	125	121		115	
Naphthalene	1.6	U	125	125	114		117	
n-Butylbenzene	1.3	U	125	125	111		112	
N-Propylbenzene	2.8	U	125	125	127		122	
o-Xylene	1.8	U	125	125	117		114	
sec-Butylbenzene	1.7	U	125	125	117		113	
Styrene	1.4	U	125	125	118		116	
Tetrachloroethene	1.9	U	125	125	120		116	
Toluene	1.4	U	125	125	128		125	
trans-1,2-Dichloroethene	1.8	U	125	125	113		109	
trans-1,3-Dichloropropene	1.9	U	125	125	115		115	
Trichloroethene	320		125	125	406	E	403	E
Trichlorofluoromethane	3.1	U	125	125	99.1		97.6	
Vinyl acetate	1.8	U	125	125	128		127	
Vinyl chloride	2.8	U	125	125	108		109	
Xylenes, Total	1.5	U	250	250	238		229	
tert-Butylbenzene	1.6	U	125	125	117		114	
1,2-Dibromoethane	1.4	U	125	125	125		124	

Client: Tetra Tech, Inc. Job Number: 240-81698-1

Method Blank - Batch: 240-286045

Method: 8260C
Preparation: 5030C

Lab Sample ID:	MB 240-286045/6	Analysis Batch:	240-286045	Instrument ID:	A3UX16
Client Matrix:	Water	Prep Batch:	N/A	Lab File ID:	UXM4287.D
Dilution:	1.0	Leach Batch:	N/A	Initial Weight/Volume:	5 mL
Analysis Date:	07/06/2017 0938	Units:	ug/L	Final Weight/Volume:	5 mL
Prep Date:	07/06/2017 0938				
Leach Date:	N/A				

Analyte	Result	Qual	MDL	RL
1,1,1,2-Tetrachloroethane	0.46	U	0.46	1.0
1,1,1-Trichloroethane	0.23	U	0.23	1.0
1,1,2,2-Tetrachloroethane	0.32	U	0.32	1.0
1,1,2-Trichloro-1,2,2-trifluoroethane	0.41	U	0.41	1.0
1,1-Dichloroethane	0.25	U	0.25	1.0
1,1-Dichloroethene	0.27	U	0.27	1.0
1,1-Dichloropropene	0.28	U	0.28	1.0
1,2,3-Trichlorobenzene	0.35	U	0.35	1.0
1,2,3-Trichloropropane	0.54	U	0.54	1.0
1,2,3-Trimethylbenzene	0.22	U	0.22	5.0
1,2,4-Trichlorobenzene	0.27	U	0.27	1.0
1,2,4-Trimethylbenzene	0.24	U	0.24	1.0
1,2-Dibromo-3-Chloropropane	0.47	U	0.47	2.0
1,2-Dichlorobenzene	0.26	U	0.26	1.0
1,2-Dichloroethane	0.30	U	0.30	1.0
1,2-Dichloropropane	0.30	U	0.30	1.0
1,3-Dichlorobenzene	0.32	U	0.32	1.0
1,3-Dichloropropane	0.29	U	0.29	1.0
1,4-Dichlorobenzene	0.23	U	0.23	1.0
2,2-Dichloropropane	0.34	U	0.34	1.0
2-Butanone (MEK)	1.0	U	1.0	10
2-Chloroethyl vinyl ether	0.65	U	0.65	10
2-Chlorotoluene	0.28	U	0.28	1.0
2-Hexanone	1.2	U	1.2	10
4-Chlorotoluene	0.23	U	0.23	1.0
p-Isopropyltoluene	0.29	U	0.29	1.0
4-Methyl-2-pentanone (MIBK)	0.71	U	0.71	10
Acetone	1.8	U	1.8	10
Benzene	0.28	U	0.28	1.0
Bromobenzene	0.31	U	0.31	1.0
Bromoform	0.43	U	0.43	1.0
Bromomethane	0.42	U	0.42	1.0
Carbon disulfide	0.34	U	0.34	1.0
Carbon tetrachloride	0.35	U	0.35	1.0
Chlorobenzene	0.32	U	0.32	1.0
Dibromochloromethane	0.25	U	0.25	1.0
Chloroethane	0.41	U	0.41	1.0
Chloroform	0.31	U	0.31	1.0
Chloromethane	0.43	U	0.43	1.0
cis-1,2-Dichloroethene	0.30	U	0.30	1.0
cis-1,3-Dichloropropene	0.26	U	0.26	1.0
Dibromomethane	0.46	U	0.46	1.0
Bromochloromethane	0.47	U	0.47	1.0
Dichlorodifluoromethane	0.50	U	0.50	1.0
Bromodichloromethane	0.30	U	0.30	1.0

Client: Tetra Tech, Inc. Job Number: 240-81698-1

Method Blank - Batch: 240-286045

Method: 8260C
Preparation: 5030C

Lab Sample ID:	MB 240-286045/6	Analysis Batch:	240-286045	Instrument ID:	A3UX16
Client Matrix:	Water	Prep Batch:	N/A	Lab File ID:	UXM4287.D
Dilution:	1.0	Leach Batch:	N/A	Initial Weight/Volume:	5 mL
Analysis Date:	07/06/2017 0938	Units:	ug/L	Final Weight/Volume:	5 mL
Prep Date:	07/06/2017 0938				
Leach Date:	N/A				

Analyte	Result	Qual	MDL	RL
tert-Butyl alcohol (TBA)	4.6	U	4.6	50
Ethylbenzene	0.26	U	0.26	1.0
Hexachlorobutadiene	0.36	U	0.36	1.0
Diisopropyl ether	0.44	U	0.44	10
Isopropylbenzene	0.21	U	0.21	1.0
Methyl tert-butyl ether	0.27	U	0.27	1.0
Methylene Chloride	0.53	U	0.53	1.0
m-Xylene & p-Xylene	0.24	U	0.24	2.0
Naphthalene	0.25	U	0.25	1.0
n-Butylbenzene	0.21	U	0.21	1.0
N-Propylbenzene	0.45	U	0.45	1.0
o-Xylene	0.28	U	0.28	1.0
sec-Butylbenzene	0.27	U	0.27	1.0
Styrene	0.23	U	0.23	1.0
Tert-amyl methyl ether	0.29	U	0.29	5.0
Ethyl t-butyl ether	0.35	U	0.35	5.0
Tetrachloroethene	0.30	U	0.30	1.0
Toluene	0.23	U	0.23	1.0
trans-1,2-Dichloroethene	0.29	U	0.29	1.0
trans-1,3-Dichloropropene	0.31	U	0.31	1.0
Trichloroethene	0.33	U	0.33	1.0
Trichlorofluoromethane	0.50	U	0.50	1.0
Vinyl acetate	0.28	U	0.28	2.0
Vinyl chloride	0.45	U	0.45	1.0
Xylenes, Total	0.24	U	0.24	2.0
tert-Butylbenzene	0.26	U	0.26	1.0
1,2-Dibromoethane	0.23	U	0.23	1.0

Surrogate	% Rec	Acceptance Limits
Toluene-d8 (Surr)	103	73 - 120
Dibromofluoromethane (Surr)	85	69 - 124
4-Bromofluorobenzene (Surr)	90	69 - 120
1,2-Dichloroethane-d4 (Surr)	86	61 - 138

Client: Tetra Tech, Inc. Job Number: 240-81698-1

Lab Control Sample - Batch: 240-286045

Method: 8260C
Preparation: 5030C

Lab Sample ID:	LCS 240-286045/3	Analysis Batch:	240-286045	Instrument ID:	A3UX16
Client Matrix:	Water	Prep Batch:	N/A	Lab File ID:	UXM4284.D
Dilution:	1.0	Leach Batch:	N/A	Initial Weight/Volume:	5 mL
Analysis Date:	07/06/2017 0829	Units:	ug/L	Final Weight/Volume:	5 mL
Prep Date:	07/06/2017 0829				
Leach Date:	N/A				

Analyte	Spike Amount	Result	% Rec.	Limit	Qual
1,1,1,2-Tetrachloroethane	20.0	18.8	94	73 - 136	
1,1,1-Trichloroethane	20.0	17.4	87	64 - 147	
1,1,2,2-Tetrachloroethane	20.0	21.8	109	58 - 122	
1,1,2-Trichloro-1,2,2-trifluoroethane	20.0	19.2	96	65 - 144	
1,1-Dichloroethane	20.0	18.6	93	74 - 120	
1,1-Dichloroethene	20.0	17.2	86	65 - 127	
1,1-Dichloropropene	20.0	19.6	98	80 - 122	
1,2,3-Trichlorobenzene	20.0	19.8	99	31 - 144	
1,2,3-Trichloropropane	20.0	22.0	110	53 - 134	
1,2,4-Trichlorobenzene	20.0	18.6	93	34 - 141	
1,2,4-Trimethylbenzene	20.0	20.3	102	80 - 120	
1,2-Dibromo-3-Chloropropane	20.0	18.7	93	50 - 130	
1,2-Dichlorobenzene	20.0	20.1	101	80 - 120	
1,2-Dichloroethane	20.0	17.2	86	68 - 133	
1,2-Dichloropropane	20.0	19.9	99	78 - 127	
1,3-Dichlorobenzene	20.0	19.8	99	80 - 120	
1,3-Dichloropropane	20.0	21.6	108	71 - 124	
1,4-Dichlorobenzene	20.0	19.6	98	80 - 120	
2,2-Dichloropropane	20.0	18.8	94	32 - 178	
2-Butanone (MEK)	40.0	35.8	89	43 - 149	
2-Chloroethyl vinyl ether	20.0	18.7	93	58 - 123	
2-Chlorotoluene	20.0	21.0	105	80 - 120	
2-Hexanone	40.0	39.1	98	28 - 169	
4-Chlorotoluene	20.0	21.6	108	79 - 120	
p-Isopropyltoluene	20.0	20.2	101	78 - 125	
4-Methyl-2-pentanone (MIBK)	40.0	37.1	93	53 - 144	
Acetone	40.0	26.7	67	35 - 131	
Benzene	20.0	18.8	94	79 - 120	
Bromobenzene	20.0	20.6	103	73 - 120	
Bromoform	20.0	17.7	89	55 - 145	
Bromomethane	20.0	16.3	82	17 - 158	
Carbon disulfide	20.0	18.1	91	49 - 141	
Carbon tetrachloride	20.0	16.6	83	55 - 171	
Chlorobenzene	20.0	20.2	101	80 - 120	
Dibromochloromethane	20.0	19.4	97	64 - 129	
Chloroethane	20.0	18.4	92	10 - 149	
Chloroform	20.0	17.1	86	80 - 120	
Chloromethane	20.0	15.7	78	59 - 124	
cis-1,2-Dichloroethene	20.0	17.4	87	77 - 120	
cis-1,3-Dichloropropene	20.0	18.5	93	75 - 120	
Dibromomethane	20.0	16.9	84	80 - 120	
Bromochloromethane	20.0	18.0	90	78 - 120	
Dichlorodifluoromethane	20.0	16.7	83	42 - 141	
Bromodichloromethane	20.0	17.6	88	79 - 125	
tert-Butyl alcohol (TBA)	200	173	87	52 - 136	
Ethylbenzene	20.0	20.4	102	80 - 120	

Client: Tetra Tech, Inc.

Job Number: 240-81698-1

Lab Control Sample - Batch: 240-286045

Method: 8260C
Preparation: 5030C

Lab Sample ID:	LCS 240-286045/3	Analysis Batch:	240-286045	Instrument ID:	A3UX16
Client Matrix:	Water	Prep Batch:	N/A	Lab File ID:	UXM4284.D
Dilution:	1.0	Leach Batch:	N/A	Initial Weight/Volume:	5 mL
Analysis Date:	07/06/2017 0829	Units:	ug/L	Final Weight/Volume:	5 mL
Prep Date:	07/06/2017 0829				
Leach Date:	N/A				

Analyte	Spike Amount	Result	% Rec.	Limit	Qual
Hexachlorobutadiene	20.0	18.3	91	36 - 146	
Isopropylbenzene	20.0	19.1	95	80 - 128	
Methyl tert-butyl ether	20.0	17.0	85	73 - 120	
Methylene Chloride	20.0	16.7	83	64 - 140	
m-Xylene & p-Xylene	20.0	20.0	100	80 - 120	
Naphthalene	20.0	19.8	99	31 - 127	
n-Butylbenzene	20.0	20.5	102	60 - 137	
N-Propylbenzene	20.0	21.8	109	76 - 120	
o-Xylene	20.0	19.3	97	80 - 120	
sec-Butylbenzene	20.0	20.6	103	76 - 124	
Styrene	20.0	19.6	98	80 - 121	
Tetrachloroethene	20.0	20.4	102	80 - 122	
Toluene	20.0	21.1	105	78 - 120	
trans-1,2-Dichloroethene	20.0	18.5	93	74 - 124	
trans-1,3-Dichloropropene	20.0	19.5	98	67 - 120	
Trichloroethene	20.0	17.5	88	76 - 124	
Trichlorofluoromethane	20.0	16.1	81	27 - 176	
Vinyl acetate	20.0	20.8	104	42 - 141	
Vinyl chloride	20.0	17.4	87	65 - 124	
Xylenes, Total	40.0	39.3	98	80 - 120	
tert-Butylbenzene	20.0	20.2	101	79 - 120	
1,2-Dibromoethane	20.0	20.3	101	80 - 120	

Surrogate	% Rec	Acceptance Limits
Toluene-d8 (Surr)	106	73 - 120
Dibromofluoromethane (Surr)	83	69 - 124
4-Bromofluorobenzene (Surr)	95	69 - 120
1,2-Dichloroethane-d4 (Surr)	85	61 - 138

Client: Tetra Tech, Inc. Job Number: 240-81698-1

Matrix Spike/
Matrix Spike Duplicate Recovery Report - Batch: 240-286045

Method: 8260C
Preparation: 5030C

MS Lab Sample ID:	240-81718-E-1 MS	Analysis Batch:	240-286045	Instrument ID:	A3UX16
Client Matrix:	Water	Prep Batch:	N/A	Lab File ID:	UXM4306.D
Dilution:	1.0	Leach Batch:	N/A	Initial Weight/Volume:	5 mL
Analysis Date:	07/06/2017 1705			Final Weight/Volume:	5 mL
Prep Date:	07/06/2017 1705				5 mL
Leach Date:	N/A				

MSD Lab Sample ID:	240-81718-H-1 MSD	Analysis Batch:	240-286045	Instrument ID:	A3UX16
Client Matrix:	Water	Prep Batch:	N/A	Lab File ID:	UXM4307.D
Dilution:	1.0	Leach Batch:	N/A	Initial Weight/Volume:	5 mL
Analysis Date:	07/06/2017 1731			Final Weight/Volume:	5 mL
Prep Date:	07/06/2017 1731				5 mL
Leach Date:	N/A				

	% Rec.						
Analyte	MS	MSD	Limit	RPD	RPD Limit	MS Qual	MSD Qual
1,1,1,2-Tetrachloroethane	92	100	67 - 142	9	18		
1,1,1-Trichloroethane	86	91	57 - 156	6	13		
1,1,2,2-Tetrachloroethane	109	114	51 - 123	5	17		
1,1-Dichloroethane	93	99	69 - 122	7	11		
1,1-Dichloroethene	86	93	62 - 127	7	14		
1,2,3-Trichloropropane	108	113	41 - 152	5	12		
1,2-Dichlorobenzene	100	107	70 - 120	7	19		
1,2-Dichloroethane	86	91	64 - 138	6	11		
1,2-Dichloropropane	99	106	72 - 131	6	12		
1,4-Dichlorobenzene	96	105	72 - 120	9	17		
2-Butanone (MEK)	85	89	34 - 153	5	23		
2-Hexanone	102	109	21 - 184	7	12		
4-Methyl-2-pentanone (MIBK)	95	98	53 - 147	4	16		
Acetone	64	68	19 - 133	5	35		
Benzene	94	100	69 - 127	6	10		
Bromoform	83	91	61 - 135	9	13		
Bromomethane	83	85	10 - 148	3	35		
Carbon disulfide	92	97	46 - 143	6	18		
Carbon tetrachloride	83	89	53 - 175	7	17		
Chlorobenzene	99	105	76 - 120	6	12		
Dibromochloromethane	94	101	62 - 131	8	15		
Chloroethane	93	94	10 - 141	1	35		
Chloroform	86	92	74 - 125	7	11		
Chloromethane	80	82	34 - 127	3	25		
cis-1,2-Dichloroethene	87	92	69 - 127	5	11		
cis-1,3-Dichloropropene	87	94	68 - 120	8	13		
Dibromomethane	82	87	73 - 120	5	16		
Bromochloromethane	89	92	66 - 132	3	15		
Bromodichloromethane	87	93	75 - 128	7	13		
Ethylbenzene	100	108	72 - 121	8	15		
Methylene Chloride	83	90	52 - 137	8	12		
m-Xylene & p-Xylene	98	106	70 - 121	8	15		
o-Xylene	96	104	71 - 125	7	15		

Client: Tetra Tech, Inc.

Job Number: 240-81698-1

Matrix Spike/
Matrix Spike Duplicate Recovery Report - Batch: 240-286045

Method: 8260C
Preparation: 5030C

MS Lab Sample ID:	240-81718-E-1 MS	Analysis Batch:	240-286045	Instrument ID:	A3UX16
Client Matrix:	Water	Prep Batch:	N/A	Lab File ID:	UXM4306.D
Dilution:	1.0	Leach Batch:	N/A	Initial Weight/Volume:	5 mL
Analysis Date:	07/06/2017 1705			Final Weight/Volume:	5 mL
Prep Date:	07/06/2017 1705				5 mL
Leach Date:	N/A				

MSD Lab Sample ID:	240-81718-H-1 MSD	Analysis Batch:	240-286045	Instrument ID:	A3UX16
Client Matrix:	Water	Prep Batch:	N/A	Lab File ID:	UXM4307.D
Dilution:	1.0	Leach Batch:	N/A	Initial Weight/Volume:	5 mL
Analysis Date:	07/06/2017 1731			Final Weight/Volume:	5 mL
Prep Date:	07/06/2017 1731				5 mL
Leach Date:	N/A				

	% Rec.						
Analyte	MS	MSD	Limit	RPD	RPD Limit	MS Qual	MSD Qual
Styrene	98	103	74 - 125	5	14		
Tetrachloroethene	100	103	69 - 126	3	18		
Toluene	105	113	69 - 125	7	14		
trans-1,2-Dichloroethene	91	98	66 - 131	7	11		
trans-1,3-Dichloropropene	94	101	59 - 120	8	14		
Trichloroethene	87	92	68 - 129	6	12		
Trichlorofluoromethane	80	83	28 - 172	3	26		
Vinyl acetate	99	106	51 - 134	7	12		
Vinyl chloride	89	92	55 - 123	3	12		
Xylenes, Total	97	105	71 - 122	7	14		

Surrogate	MS % Rec	MSD % Rec	Acceptance Limits
Toluene-d8 (Surr)	107	109	73 - 120
Dibromofluoromethane (Surr)	87	88	69 - 124
4-Bromofluorobenzene (Surr)	96	98	69 - 120
1,2-Dichloroethane-d4 (Surr)	90	87	61 - 138

Client: Tetra Tech, Inc. Job Number: 240-81698-1

Matrix Spike/
Matrix Spike Duplicate Recovery Report - Batch: 240-286045

Method: 8260C
Preparation: 5030C

MS Lab Sample ID:	240-81718-E-1 MS	Units:	ug/L	MSD Lab Sample ID:	240-81718-H-1 MSD
Client Matrix:	Water			Client Matrix:	Water
Dilution:	1.0			Dilution:	1.0
Analysis Date:	07/06/2017 1705			Analysis Date:	07/06/2017 1731
Prep Date:	07/06/2017 1705			Prep Date:	07/06/2017 1731
Leach Date:	N/A			Leach Date:	N/A

Analyte	Sample Result/Qual		MS Spike Amount	MSD Spike Amount	MS Result/Qual	MSD Result/Qual
1,1,1,2-Tetrachloroethane	0.46	U	20.0	20.0	18.3	20.1
1,1,1-Trichloroethane	0.23	U	20.0	20.0	17.3	18.3
1,1,2,2-Tetrachloroethane	0.32	U	20.0	20.0	21.7	22.8
1,1-Dichloroethane	0.25	U	20.0	20.0	18.5	19.8
1,1-Dichloroethene	0.27	U	20.0	20.0	17.2	18.6
1,2,3-Trichloropropane	0.54	U	20.0	20.0	21.6	22.7
1,2-Dichlorobenzene	0.26	U	20.0	20.0	19.9	21.3
1,2-Dichloroethane	0.30	U	20.0	20.0	17.1	18.2
1,2-Dichloropropane	0.30	U	20.0	20.0	19.9	21.2
1,4-Dichlorobenzene	0.23	U	20.0	20.0	19.2	21.0
2-Butanone (MEK)	1.0	U	40.0	40.0	34.1	35.7
2-Hexanone	1.2	U	40.0	40.0	40.9	43.7
4-Methyl-2-pentanone (MIBK)	0.71	U	40.0	40.0	37.9	39.4
Acetone	1.8	U	40.0	40.0	25.8	27.1
Benzene	0.28	U	20.0	20.0	18.9	20.0
Bromoform	0.43	U	20.0	20.0	16.7	18.2
Bromomethane	0.42	U	20.0	20.0	16.5	17.0
Carbon disulfide	0.34	U	20.0	20.0	18.4	19.4
Carbon tetrachloride	0.35	U	20.0	20.0	16.6	17.8
Chlorobenzene	0.32	U	20.0	20.0	19.8	20.9
Dibromochloromethane	0.25	U	20.0	20.0	18.7	20.2
Chloroethane	0.41	U	20.0	20.0	18.7	18.8
Chloroform	0.31	U	20.0	20.0	17.2	18.5
Chloromethane	0.43	U	20.0	20.0	16.0	16.4
cis-1,2-Dichloroethene	0.30	U	20.0	20.0	17.5	18.4
cis-1,3-Dichloropropene	0.26	U	20.0	20.0	17.4	18.8
Dibromomethane	0.46	U	20.0	20.0	16.5	17.3
Bromochloromethane	0.47	U	20.0	20.0	17.8	18.3
Bromodichloromethane	0.30	U	20.0	20.0	17.4	18.6
Ethylbenzene	0.26	U	20.0	20.0	20.1	21.7
Methylene Chloride	0.53	U	20.0	20.0	16.6	17.9
m-Xylene & p-Xylene	0.24	U	20.0	20.0	19.6	21.2
o-Xylene	0.28	U	20.0	20.0	19.3	20.7
Styrene	0.23	U	20.0	20.0	19.5	20.6
Tetrachloroethene	0.30	U	20.0	20.0	19.9	20.6
Toluene	0.23	U	20.0	20.0	21.0	22.6
trans-1,2-Dichloroethene	0.29	U	20.0	20.0	18.3	19.6
trans-1,3-Dichloropropene	0.31	U	20.0	20.0	18.7	20.3
Trichloroethene	0.33	U	20.0	20.0	17.4	18.4
Trichlorofluoromethane	0.50	U	20.0	20.0	16.1	16.6
Vinyl acetate	0.28	U	20.0	20.0	19.8	21.2
Vinyl chloride	0.45	U	20.0	20.0	17.8	18.3
Xylenes, Total	0.24	U	40.0	40.0	38.9	41.9

Client: Tetra Tech, Inc. Job Number: 240-81698-1

Method Blank - Batch: 240-285524

Method: 8082A
Preparation: 3520C

Lab Sample ID:	MB 240-285524/15-A	Analysis Batch:	240-285854	Instrument ID:	A2HP11
Client Matrix:	Water	Prep Batch:	240-285524	Lab File ID:	P11070527.D
Dilution:	1.0	Leach Batch:	N/A	Initial Weight/Volume:	1000 mL
Analysis Date:	07/05/2017 1713	Units:	ug/L	Final Weight/Volume:	2 mL
Prep Date:	06/30/2017 0917			Injection Volume:	1 uL
Leach Date:	N/A			Column ID:	PRIMARY

Analyte	Result	Qual	MDL	RL
Aroclor-1016	0.050	U	0.050	0.10
Aroclor-1221	0.090	U	0.090	0.10
Aroclor-1232	0.070	U	0.070	0.10
Aroclor-1242	0.060	U	0.060	0.10
Aroclor-1248	0.050	U	0.050	0.10
Aroclor-1254	0.030	U	0.030	0.10
Aroclor-1260	0.040	U	0.040	0.10

Surrogate	% Rec	Acceptance Limits
Tetrachloro-m-xylene	59	21 - 120
DCB Decachlorobiphenyl	68	10 - 120

Lab Control Sample - Batch: 240-285524

Method: 8082A
Preparation: 3520C

Lab Sample ID:	LCS 240-285524/16-A	Analysis Batch:	240-285854	Instrument ID:	A2HP11
Client Matrix:	Water	Prep Batch:	240-285524	Lab File ID:	P11070528.D
Dilution:	1.0	Leach Batch:	N/A	Initial Weight/Volume:	1000 mL
Analysis Date:	07/05/2017 1732	Units:	ug/L	Final Weight/Volume:	2 mL
Prep Date:	06/30/2017 0917			Injection Volume:	1 uL
Leach Date:	N/A			Column ID:	PRIMARY

Analyte	Spike Amount	Result	% Rec.	Limit	Qual
Aroclor-1016	2.50	1.19	47	32 - 120	
Aroclor-1260	2.50	1.52	61	36 - 120	

Surrogate	% Rec	Acceptance Limits
Tetrachloro-m-xylene	54	21 - 120
DCB Decachlorobiphenyl	68	10 - 120

Client: Tetra Tech, Inc. Job Number: 240-81698-1

Method Blank - Batch: 240-285979

Method: 8082A
Preparation: 3540C

Lab Sample ID:	MB 240-285979/22-A	Analysis Batch:	240-286194	Instrument ID:	A2HP4
Client Matrix:	Solid	Prep Batch:	240-285979	Lab File ID:	P40707027.D
Dilution:	1.0	Leach Batch:	N/A	Initial Weight/Volume:	10 g
Analysis Date:	07/07/2017 1318	Units:	ug/Kg	Final Weight/Volume:	10 mL
Prep Date:	07/05/2017 1332			Injection Volume:	1 uL
Leach Date:	N/A			Column ID:	PRIMARY

Analyte	Result	Qual	MDL	RL
Aroclor-1016	24	U	24	50
Aroclor-1221	23	U	23	50
Aroclor-1232	16	U	16	50
Aroclor-1242	20	U	20	50
Aroclor-1248	17	U	17	50
Aroclor-1254	14	U	14	50
Aroclor-1260	18	U	18	50

Surrogate	% Rec	Acceptance Limits
Tetrachloro-m-xylene	72	14 - 128
DCB Decachlorobiphenyl	83	10 - 132

Lab Control Sample - Batch: 240-285979

Method: 8082A
Preparation: 3540C

Lab Sample ID:	LCS 240-285979/23-A	Analysis Batch:	240-286194	Instrument ID:	A2HP4
Client Matrix:	Solid	Prep Batch:	240-285979	Lab File ID:	P40707028.D
Dilution:	1.0	Leach Batch:	N/A	Initial Weight/Volume:	10 g
Analysis Date:	07/07/2017 1337	Units:	ug/Kg	Final Weight/Volume:	10 mL
Prep Date:	07/05/2017 1332			Injection Volume:	1 uL
Leach Date:	N/A			Column ID:	PRIMARY

Analyte	Spike Amount	Result	% Rec.	Limit	Qual
Aroclor-1016	1000	529	53	47 - 120	
Aroclor-1260	1000	610	61	46 - 120	

Surrogate	% Rec	Acceptance Limits
Tetrachloro-m-xylene	63	14 - 128
DCB Decachlorobiphenyl	72	10 - 132

Client: Tetra Tech, Inc. Job Number: 240-81698-1

Matrix Spike/
Matrix Spike Duplicate Recovery Report - Batch: 240-285979

Method: 8082A
Preparation: 3540C

MS Lab Sample ID:	240-81698-5	Analysis Batch:	240-286194	Instrument ID:	A2HP4
Client Matrix:	Solid	Prep Batch:	240-285979	Lab File ID:	P40707011.D
Dilution:	1.0	Leach Batch:	N/A	Initial Weight/Volume:	9.94 g
Analysis Date:	07/07/2017 0801			Final Weight/Volume:	10 mL
Prep Date:	07/05/2017 1332			Injection Volume:	1 uL
Leach Date:	N/A			Column ID:	PRIMARY

MSD Lab Sample ID:	240-81698-5	Analysis Batch:	240-286194	Instrument ID:	A2HP4
Client Matrix:	Solid	Prep Batch:	240-285979	Lab File ID:	P40707012.D
Dilution:	1.0	Leach Batch:	N/A	Initial Weight/Volume:	10.15 g
Analysis Date:	07/07/2017 0821			Final Weight/Volume:	10 mL
Prep Date:	07/05/2017 1332			Injection Volume:	1 uL
Leach Date:	N/A			Column ID:	PRIMARY

	% Rec.						
Analyte	MS	MSD	Limit	RPD	RPD Limit	MS Qual	MSD Qual
Aroclor-1016	92	83	31 - 120	12	30		
Aroclor-1260	87	81	21 - 122	10	30		

Surrogate	MS % Rec	MSD % Rec	Acceptance Limits
Tetrachloro-m-xylene	101	90	14 - 128
DCB Decachlorobiphenyl	108	117	10 - 132

Matrix Spike/
Matrix Spike Duplicate Recovery Report - Batch: 240-285979

Method: 8082A
Preparation: 3540C

MS Lab Sample ID:	240-81698-5	Units:	ug/Kg	MSD Lab Sample ID:	240-81698-5
Client Matrix:	Solid			Client Matrix:	Solid
Dilution:	1.0			Dilution:	1.0
Analysis Date:	07/07/2017 0801			Analysis Date:	07/07/2017 0821
Prep Date:	07/05/2017 1332			Prep Date:	07/05/2017 1332
Leach Date:	N/A			Leach Date:	N/A

Analyte	Sample Result/Qual		MS Spike Amount	MSD Spike Amount	MS Result/Qual	MSD Result/Qual
Aroclor-1016	27	U	1140	1120	1060	934
Aroclor-1260	21	U	1140	1120	996	903

Client: Tetra Tech, Inc. Job Number: 240-81698-1

TCLP SPLPE Leachate Blank - Batch: 240-286066

Method: 6010B
Preparation: 3010A
TCLP

Lab Sample ID:	LB 240-286004/1-B	Analysis Batch:	240-286324	Instrument ID:	I12
Client Matrix:	Water	Prep Batch:	240-286066	Lab File ID:	I12070717A.asc
Dilution:	1.0	Leach Batch:	240-286004	Initial Weight/Volume:	50 mL
Analysis Date:	07/07/2017 1058	Units:	mg/L	Final Weight/Volume:	50 mL
Prep Date:	07/06/2017 1400				
Leach Date:	07/05/2017 1520				

Analyte	Result	Qual	MDL	RL
Arsenic	0.00431	J	0.0033	0.050
Barium	0.123	J	0.0024	0.50
Cadmium	0.00029	U	0.00029	0.050
Chromium	0.00158	J	0.00055	0.050
Lead	0.0019	U	0.0019	0.050
Selenium	0.0051	U	0.0051	0.050
Silver	0.00092	U	0.00092	0.050

Method Blank - Batch: 240-286066

Method: 6010B
Preparation: 3010A

Lab Sample ID:	MB 240-286066/2-A	Analysis Batch:	240-286324	Instrument ID:	I12
Client Matrix:	Water	Prep Batch:	240-286066	Lab File ID:	I12070717A.asc
Dilution:	1.0	Leach Batch:	N/A	Initial Weight/Volume:	50 mL
Analysis Date:	07/07/2017 1103	Units:	mg/L	Final Weight/Volume:	50 mL
Prep Date:	07/06/2017 1400				
Leach Date:	N/A				

Analyte	Result	Qual	MDL	RL
Arsenic	0.0033	U	0.0033	0.050
Barium	0.0024	U	0.0024	0.50
Cadmium	0.00029	U	0.00029	0.050
Chromium	0.00055	U	0.00055	0.050
Lead	0.0019	U	0.0019	0.050
Selenium	0.0051	U	0.0051	0.050
Silver	0.00092	U	0.00092	0.050

Client: Tetra Tech, Inc. Job Number: 240-81698-1

Lab Control Sample - Batch: 240-286066

Method: 6010B
Preparation: 3010A

Lab Sample ID:	LCS 240-286066/3-A	Analysis Batch:	240-286324	Instrument ID:	I12
Client Matrix:	Water	Prep Batch:	240-286066	Lab File ID:	I12070717A.asc
Dilution:	1.0	Leach Batch:	N/A	Initial Weight/Volume:	50 mL
Analysis Date:	07/07/2017 1107	Units:	mg/L	Final Weight/Volume:	50 mL
Prep Date:	07/06/2017 1400				
Leach Date:	N/A				

Analyte	Spike Amount	Result	% Rec.	Limit	Qual
Arsenic	2.00	2.14	107	50 - 150	
Barium	2.00	2.11	105	50 - 150	
Cadmium	0.0500	0.0510	102	50 - 150	
Chromium	0.200	0.201	100	50 - 150	
Lead	0.500	0.470	94	50 - 150	
Selenium	2.00	2.18	109	50 - 150	
Silver	0.0500	0.0513	103	50 - 150	

Matrix Spike/
Matrix Spike Duplicate Recovery Report - Batch: 240-286066

Method: 6010B
Preparation: 3010A
TCLP

MS Lab Sample ID:	240-81623-B-1-D MS ^5	Analysis Batch:	240-286324	Instrument ID:	I12
Client Matrix:	Water	Prep Batch:	240-286066	Lab File ID:	I12070717A.asc
Dilution:	5.0	Leach Batch:	240-285395	Initial Weight/Volume:	50 mL
Analysis Date:	07/07/2017 1125			Final Weight/Volume:	50 mL
Prep Date:	07/06/2017 1400				
Leach Date:	06/29/2017 1248				

MSD Lab Sample ID:	240-81623-B-1-E MSD ^5	Analysis Batch:	240-286324	Instrument ID:	I12
Client Matrix:	Water	Prep Batch:	240-286066	Lab File ID:	I12070717A.asc
Dilution:	5.0	Leach Batch:	240-285395	Initial Weight/Volume:	50 mL
Analysis Date:	07/07/2017 1130			Final Weight/Volume:	50 mL
Prep Date:	07/06/2017 1400				
Leach Date:	06/29/2017 1248				

	% Rec.						
Analyte	MS	MSD	Limit	RPD	RPD Limit	MS Qual	MSD Qual
Arsenic	102	104	75 - 125	2	20		
Barium	98	101	75 - 125	3	20		
Cadmium	99	101	75 - 125	2	20		
Chromium	99	102	75 - 125	3	20		
Lead	98	101	75 - 125	3	20		
Selenium	105	106	75 - 125	0	20		
Silver	96	100	75 - 125	4	20		

Client: Tetra Tech, Inc. Job Number: 240-81698-1

Matrix Spike/
Matrix Spike Duplicate Recovery Report - Batch: 240-286066

Method: 6010B
Preparation: 3010A
TCLP

MS Lab Sample ID:	240-81623-B-1-D MS ^5	Units:	mg/L
Client Matrix:	Water		
Dilution:	5.0		
Analysis Date:	07/07/2017 1125		
Prep Date:	07/06/2017 1400		
Leach Date:	06/29/2017 1248		

MSD Lab Sample ID:	240-81623-B-1-E MSD ^5
Client Matrix:	Water
Dilution:	5.0
Analysis Date:	07/07/2017 1130
Prep Date:	07/06/2017 1400
Leach Date:	06/29/2017 1248

Analyte	Sample Result/Qual		MS Spike Amount	MSD Spike Amount	MS Result/Qual	MSD Result/Qual
Arsenic	0.0033	U	5.00	5.00	5.12	5.21
Barium	0.39	J	50.0	50.0	49.4	50.8
Cadmium	0.0015	J	1.00	1.00	0.989	1.01
Chromium	0.035	J	5.00	5.00	4.99	5.14
Lead	0.0034	J	5.00	5.00	4.90	5.04
Selenium	0.0051	U	1.00	1.00	1.05	1.06
Silver	0.00092	U	1.00	1.00	0.962	1.00

Serial Dilution - Batch: 240-286066

Method: 6010B
Preparation: 3010A
TCLP

Lab Sample ID:	240-81623-B-1-C SD ^5	Analysis Batch:	240-286324	Instrument ID:	I12
Client Matrix:	Water	Prep Batch:	240-286066	Lab File ID:	I12070717A.asc
Dilution:	5.0	Leach Batch:	240-285395	Initial Weight/Volume:	50 mL
Analysis Date:	07/07/2017 1116	Units:	mg/L	Final Weight/Volume:	50 mL
Prep Date:	07/06/2017 1400				
Leach Date:	06/29/2017 1248				

Analyte	Sample Result/Qual		Result	%Diff	Limit	Qual
Arsenic	0.0033	U	0.017	NC	10	U
Barium	0.39	J	0.370	4.9	10	J
Cadmium	0.0015	J	0.0015	NC	10	U
Chromium	0.035	J	0.0334	5.6	10	J
Lead	0.0034	J	0.0095	NC	10	U
Selenium	0.0051	U	0.026	NC	10	U
Silver	0.00092	U	0.0046	NC	10	U

Client: Tetra Tech, Inc. Job Number: 240-81698-1

TCLP SPLPE Leachate Blank - Batch: 240-286297

Method: 6010B
Preparation: 3010A
TCLP

Lab Sample ID:	LB 240-286170/1-B	Analysis Batch:	240-286626	Instrument ID:	I9
Client Matrix:	Solid	Prep Batch:	240-286297	Lab File ID:	I9071017B.asc
Dilution:	1.0	Leach Batch:	240-286170	Initial Weight/Volume:	50 mL
Analysis Date:	07/10/2017 2236	Units:	mg/L	Final Weight/Volume:	50 mL
Prep Date:	07/07/2017 1400				
Leach Date:	07/06/2017 1625				

Analyte	Result	Qual	MDL	RL
Arsenic	0.00641	J	0.0033	0.050
Barium	0.120	J	0.0024	0.50
Cadmium	0.00029	U	0.00029	0.050
Chromium	0.000745	J	0.00055	0.050
Lead	0.0019	U	0.0019	0.050
Selenium	0.00802	J	0.0051	0.050
Silver	0.00092	U	0.00092	0.050

Method Blank - Batch: 240-286297

Method: 6010B
Preparation: 3010A

Lab Sample ID:	MB 240-286297/2-A	Analysis Batch:	240-286626	Instrument ID:	I9
Client Matrix:	Water	Prep Batch:	240-286297	Lab File ID:	I9071017B.asc
Dilution:	1.0	Leach Batch:	N/A	Initial Weight/Volume:	50 mL
Analysis Date:	07/10/2017 2240	Units:	mg/L	Final Weight/Volume:	50 mL
Prep Date:	07/07/2017 1400				
Leach Date:	N/A				

Analyte	Result	Qual	MDL	RL
Arsenic	0.0033	U	0.0033	0.050
Barium	0.0024	U	0.0024	0.50
Cadmium	0.00029	U	0.00029	0.050
Chromium	0.00055	U	0.00055	0.050
Lead	0.0019	U	0.0019	0.050
Selenium	0.0051	U	0.0051	0.050
Silver	0.00092	U	0.00092	0.050

Client: Tetra Tech, Inc. Job Number: 240-81698-1

Lab Control Sample - Batch: 240-286297

Method: 6010B
Preparation: 3010A

Lab Sample ID:	LCS 240-286297/3-A	Analysis Batch:	240-286626	Instrument ID:	I9
Client Matrix:	Water	Prep Batch:	240-286297	Lab File ID:	I9071017B.asc
Dilution:	1.0	Leach Batch:	N/A	Initial Weight/Volume:	50 mL
Analysis Date:	07/10/2017 2245	Units:	mg/L	Final Weight/Volume:	50 mL
Prep Date:	07/07/2017 1400				
Leach Date:	N/A				

Analyte	Spike Amount	Result	% Rec.	Limit	Qual
Arsenic	2.00	2.18	109	50 - 150	
Barium	2.00	2.05	103	50 - 150	
Cadmium	0.0500	0.0512	102	50 - 150	
Chromium	0.200	0.194	97	50 - 150	
Lead	0.500	0.444	89	50 - 150	
Selenium	2.00	2.18	109	50 - 150	
Silver	0.0500	0.0547	109	50 - 150	

Matrix Spike/
Matrix Spike Duplicate Recovery Report - Batch: 240-286297

Method: 6010B
Preparation: 3010A
TCLP

MS Lab Sample ID:	240-81798-K-1-D MS ^5	Analysis Batch:	240-286626	Instrument ID:	I9
Client Matrix:	Solid	Prep Batch:	240-286297	Lab File ID:	I9071017B.asc
Dilution:	5.0	Leach Batch:	240-286170	Initial Weight/Volume:	50 mL
Analysis Date:	07/10/2017 2302			Final Weight/Volume:	50 mL
Prep Date:	07/07/2017 1400				
Leach Date:	07/06/2017 1625				

MSD Lab Sample ID:	240-81798-K-1-E MSD ^5	Analysis Batch:	240-286626	Instrument ID:	I9
Client Matrix:	Solid	Prep Batch:	240-286297	Lab File ID:	I9071017B.asc
Dilution:	5.0	Leach Batch:	240-286170	Initial Weight/Volume:	50 mL
Analysis Date:	07/10/2017 2307			Final Weight/Volume:	50 mL
Prep Date:	07/07/2017 1400				
Leach Date:	07/06/2017 1625				

	% Rec.						
Analyte	MS	MSD	Limit	RPD	RPD Limit	MS Qual	MSD Qual
Arsenic	103	104	75 - 125	1	20		
Barium	97	97	75 - 125	0	20		
Cadmium	101	102	75 - 125	2	20		
Chromium	92	94	75 - 125	2	20		
Lead	92	93	75 - 125	1	20		
Selenium	105	104	75 - 125	0	20		
Silver	100	102	75 - 125	2	20		

Client: Tetra Tech, Inc. Job Number: 240-81698-1

Matrix Spike/
Matrix Spike Duplicate Recovery Report - Batch: 240-286297

Method: 6010B
Preparation: 3010A
TCLP

MS Lab Sample ID:	240-81798-K-1-D MS ^5	Units:	mg/L
Client Matrix:	Solid		
Dilution:	5.0		
Analysis Date:	07/10/2017 2302		
Prep Date:	07/07/2017 1400		
Leach Date:	07/06/2017 1625		

MSD Lab Sample ID:	240-81798-K-1-E MSD ^5
Client Matrix:	Solid
Dilution:	5.0
Analysis Date:	07/10/2017 2307
Prep Date:	07/07/2017 1400
Leach Date:	07/06/2017 1625

Analyte	Sample Result/Qual		MS Spike Amount	MSD Spike Amount	MS Result/Qual	MSD Result/Qual
Arsenic	0.018	J	5.00	5.00	5.17	5.23
Barium	0.43	J	50.0	50.0	48.7	48.8
Cadmium	0.00036	J	1.00	1.00	1.01	1.02
Chromium	0.0017	J	5.00	5.00	4.62	4.71
Lead	0.0077	J	5.00	5.00	4.62	4.67
Selenium	0.0051	U	1.00	1.00	1.05	1.04
Silver	0.00092	U	1.00	1.00	1.00	1.02

Serial Dilution - Batch: 240-286297

Method: 6010B
Preparation: 3010A
TCLP

Lab Sample ID:	240-81798-K-1-C SD ^5	Analysis Batch:	240-286626	Instrument ID:	I9
Client Matrix:	Solid	Prep Batch:	240-286297	Lab File ID:	I9071017B.asc
Dilution:	5.0	Leach Batch:	240-286170	Initial Weight/Volume:	50 mL
Analysis Date:	07/10/2017 2253	Units:	mg/L	Final Weight/Volume:	50 mL
Prep Date:	07/07/2017 1400				
Leach Date:	07/06/2017 1625				

Analyte	Sample Result/Qual		Result	%Diff	Limit	Qual
Arsenic	0.018	J	0.017	NC	10	U
Barium	0.43	J	0.429	1.2	10	J
Cadmium	0.00036	J	0.0015	NC	10	U
Chromium	0.0017	J	0.0028	NC	10	U
Lead	0.0077	J	0.0095	NC	10	U
Selenium	0.0051	U	0.026	NC	10	U
Silver	0.00092	U	0.0046	NC	10	U

Client: Tetra Tech, Inc. Job Number: 240-81698-1

TCLP SPLPE Leachate Blank - Batch: 240-286067

Method: 7470A
Preparation: 7470A
TCLP

Lab Sample ID:	LB 240-286004/1-C	Analysis Batch:	240-286335	Instrument ID:	H3
Client Matrix:	Water	Prep Batch:	240-286067	Lab File ID:	0707A17H3.CSV
Dilution:	1.0	Leach Batch:	240-286004	Initial Weight/Volume:	50 mL
Analysis Date:	07/07/2017 1214	Units:	mg/L	Final Weight/Volume:	50 mL
Prep Date:	07/06/2017 1400				
Leach Date:	07/05/2017 1520				

Analyte	Result	Qual	MDL	RL
Mercury	0.00013	U	0.00013	0.0020

Method Blank - Batch: 240-286067

Method: 7470A
Preparation: 7470A

Lab Sample ID:	MB 240-286067/2-A	Analysis Batch:	240-286335	Instrument ID:	H3
Client Matrix:	Water	Prep Batch:	240-286067	Lab File ID:	0707A17H3.CSV
Dilution:	1.0	Leach Batch:	N/A	Initial Weight/Volume:	50 mL
Analysis Date:	07/07/2017 1216	Units:	mg/L	Final Weight/Volume:	50 mL
Prep Date:	07/06/2017 1400				
Leach Date:	N/A				

Analyte	Result	Qual	MDL	RL
Mercury	0.00013	U	0.00013	0.0020

Lab Control Sample - Batch: 240-286067

Method: 7470A
Preparation: 7470A

Lab Sample ID:	LCS 240-286067/3-A	Analysis Batch:	240-286335	Instrument ID:	H3
Client Matrix:	Water	Prep Batch:	240-286067	Lab File ID:	0707A17H3.CSV
Dilution:	1.0	Leach Batch:	N/A	Initial Weight/Volume:	50 mL
Analysis Date:	07/07/2017 1218	Units:	mg/L	Final Weight/Volume:	50 mL
Prep Date:	07/06/2017 1400				
Leach Date:	N/A				

Analyte	Spike Amount	Result	% Rec.	Limit	Qual
Mercury	0.00500	0.00533	107	80 - 120	

Client: Tetra Tech, Inc. Job Number: 240-81698-1

Matrix Spike/
Matrix Spike Duplicate Recovery Report - Batch: 240-286067

Method: 7470A
Preparation: 7470A
TCLP

MS Lab Sample ID:	240-81623-B-1-G MS	Analysis Batch:	240-286335	Instrument ID:	H3
Client Matrix:	Water	Prep Batch:	240-286067	Lab File ID:	0707A17H3.CSV
Dilution:	1.0	Leach Batch:	240-285395	Initial Weight/Volume:	50 mL
Analysis Date:	07/07/2017 1224			Final Weight/Volume:	50 mL
Prep Date:	07/06/2017 1400				
Leach Date:	06/29/2017 1248				

MSD Lab Sample ID:	240-81623-B-1-H MSD	Analysis Batch:	240-286335	Instrument ID:	H3
Client Matrix:	Water	Prep Batch:	240-286067	Lab File ID:	0707A17H3.CSV
Dilution:	1.0	Leach Batch:	240-285395	Initial Weight/Volume:	50 mL
Analysis Date:	07/07/2017 1226			Final Weight/Volume:	50 mL
Prep Date:	07/06/2017 1400				
Leach Date:	06/29/2017 1248				

Analyte	% Rec. MS	% Rec. MSD	Limit	RPD	RPD Limit	MS Qual	MSD Qual
Mercury	102	90	80 - 120	12	20		

Matrix Spike/
Matrix Spike Duplicate Recovery Report - Batch: 240-286067

Method: 7470A
Preparation: 7470A
TCLP

MS Lab Sample ID:	240-81623-B-1-G MS	Units: mg/L	MSD Lab Sample ID: 240-81623-B-1-H MSD
Client Matrix:	Water		Client Matrix: Water
Dilution:	1.0		Dilution: 1.0
Analysis Date:	07/07/2017 1224		Analysis Date: 07/07/2017 1226
Prep Date:	07/06/2017 1400		Prep Date: 07/06/2017 1400
Leach Date:	06/29/2017 1248		Leach Date: 06/29/2017 1248

Analyte	Sample Result/Qual		MS Spike Amount	MSD Spike Amount	MS Result/Qual	MSD Result/Qual
Mercury	0.00013	U	0.00500	0.00500	0.00510	0.00452

Client: Tetra Tech, Inc. Job Number: 240-81698-1

TCLP SPLPE Leachate Blank - Batch: 240-286299

Method: 7470A
Preparation: 7470A
TCLP

Lab Sample ID:	LB 240-286170/1-C	Analysis Batch:	240-286634	Instrument ID:	H3
Client Matrix:	Solid	Prep Batch:	240-286299	Lab File ID:	0710A17H3.CSV
Dilution:	1.0	Leach Batch:	240-286170	Initial Weight/Volume:	50 mL
Analysis Date:	07/10/2017 1249	Units:	mg/L	Final Weight/Volume:	50 mL
Prep Date:	07/07/2017 1400				
Leach Date:	07/06/2017 1625				

Analyte	Result	Qual	MDL	RL
Mercury	0.00013	U	0.00013	0.0020

Method Blank - Batch: 240-286299

Method: 7470A
Preparation: 7470A

Lab Sample ID:	MB 240-286299/2-A	Analysis Batch:	240-286634	Instrument ID:	H3
Client Matrix:	Water	Prep Batch:	240-286299	Lab File ID:	0710A17H3.CSV
Dilution:	1.0	Leach Batch:	N/A	Initial Weight/Volume:	50 mL
Analysis Date:	07/10/2017 1251	Units:	mg/L	Final Weight/Volume:	50 mL
Prep Date:	07/07/2017 1400				
Leach Date:	N/A				

Analyte	Result	Qual	MDL	RL
Mercury	0.00013	U	0.00013	0.0020

Lab Control Sample - Batch: 240-286299

Method: 7470A
Preparation: 7470A

Lab Sample ID:	LCS 240-286299/3-A	Analysis Batch:	240-286634	Instrument ID:	H3
Client Matrix:	Water	Prep Batch:	240-286299	Lab File ID:	0710A17H3.CSV
Dilution:	1.0	Leach Batch:	N/A	Initial Weight/Volume:	50 mL
Analysis Date:	07/10/2017 1253	Units:	mg/L	Final Weight/Volume:	50 mL
Prep Date:	07/07/2017 1400				
Leach Date:	N/A				

Analyte	Spike Amount	Result	% Rec.	Limit	Qual
Mercury	0.00500	0.00489	98	80 - 120	

Client: Tetra Tech, Inc. Job Number: 240-81698-1

Matrix Spike/
Matrix Spike Duplicate Recovery Report - Batch: 240-286299

Method: 7470A
Preparation: 7470A
TCLP

MS Lab Sample ID:	240-81798-K-1-G MS	Analysis Batch:	240-286634	Instrument ID:	H3
Client Matrix:	Solid	Prep Batch:	240-286299	Lab File ID:	0710A17H3.CSV
Dilution:	1.0	Leach Batch:	240-286170	Initial Weight/Volume:	50 mL
Analysis Date:	07/10/2017 1257			Final Weight/Volume:	50 mL
Prep Date:	07/07/2017 1400				
Leach Date:	07/06/2017 1625				

MSD Lab Sample ID:	240-81798-K-1-H MSD	Analysis Batch:	240-286634	Instrument ID:	H3
Client Matrix:	Solid	Prep Batch:	240-286299	Lab File ID:	0710A17H3.CSV
Dilution:	1.0	Leach Batch:	240-286170	Initial Weight/Volume:	50 mL
Analysis Date:	07/10/2017 1259			Final Weight/Volume:	50 mL
Prep Date:	07/07/2017 1400				
Leach Date:	07/06/2017 1625				

Analyte	% Rec. MS	% Rec. MSD	Limit	RPD	RPD Limit	MS Qual	MSD Qual
Mercury	87	91	80 - 120	4	20		

Matrix Spike/
Matrix Spike Duplicate Recovery Report - Batch: 240-286299

Method: 7470A
Preparation: 7470A
TCLP

MS Lab Sample ID:	240-81798-K-1-G MS	Units: mg/L	MSD Lab Sample ID: 240-81798-K-1-H MSD
Client Matrix:	Solid		Client Matrix: Solid
Dilution:	1.0		Dilution: 1.0
Analysis Date:	07/10/2017 1257		Analysis Date: 07/10/2017 1259
Prep Date:	07/07/2017 1400		Prep Date: 07/07/2017 1400
Leach Date:	07/06/2017 1625		Leach Date: 07/06/2017 1625

Analyte	Sample Result/Qual		MS Spike Amount	MSD Spike Amount	MS Result/Qual	MSD Result/Qual
Mercury	0.00013	U	0.00500	0.00500	0.00434	0.00454

Client: Tetra Tech, Inc. Job Number: 240-81698-1

Lab Control Sample - Batch: 240-286224 **Method: 1010A**
Preparation: N/A

Lab Sample ID:	LCS 240-286224/1	Analysis Batch:	240-286224	Instrument ID:	WHITEY
Client Matrix:	Solid	Prep Batch:	N/A	Lab File ID:	N/A
Dilution:	1.0	Leach Batch:	N/A	Initial Weight/Volume:	
Analysis Date:	07/07/2017 0728	Units:	Degrees F	Final Weight/Volume:	70 mL
Prep Date:	N/A				
Leach Date:	N/A				

Analyte	Spike Amount	Result	% Rec.	Limit	Qual
Flashpoint	81.0	83.00	102	97 - 103	

Duplicate - Batch: 240-286224 **Method: 1010A**
Preparation: N/A

Lab Sample ID:	240-81858-A-2 DU	Analysis Batch:	240-286224	Instrument ID:	WHITEY
Client Matrix:	Solid	Prep Batch:	N/A	Lab File ID:	N/A
Dilution:	1.0	Leach Batch:	N/A	Initial Weight/Volume:	
Analysis Date:	07/07/2017 0757	Units:	Degrees F	Final Weight/Volume:	70 mL
Prep Date:	N/A				
Leach Date:	N/A				

Analyte	Sample Result/Qual	Result	RPD	Limit	Qual
Flashpoint	133	133.0	0	20	

Client: Tetra Tech, Inc. Job Number: 240-81698-1

Lab Control Sample - Batch: 240-286734

Method: 1010A
Preparation: N/A

Lab Sample ID:	LCS 240-286734/1	Analysis Batch:	240-286734	Instrument ID:	WHITEY
Client Matrix:	Water	Prep Batch:	N/A	Lab File ID:	N/A
Dilution:	1.0	Leach Batch:	N/A	Initial Weight/Volume:	
Analysis Date:	07/11/2017 1315	Units:	Degrees F	Final Weight/Volume:	70 mL
Prep Date:	N/A				
Leach Date:	N/A				

Analyte	Spike Amount	Result	% Rec.	Limit	Qual
Flashpoint	81.0	79.00	98	97 - 103	

Duplicate - Batch: 240-286734

Method: 1010A
Preparation: N/A

Lab Sample ID:	240-82056-P-9 DU	Analysis Batch:	240-286734	Instrument ID:	WHITEY
Client Matrix:	Water	Prep Batch:	N/A	Lab File ID:	N/A
Dilution:	1.0	Leach Batch:	N/A	Initial Weight/Volume:	
Analysis Date:	07/11/2017 1354	Units:	Degrees F	Final Weight/Volume:	70 mL
Prep Date:	N/A				
Leach Date:	N/A				

Analyte	Sample Result/Qual	Result	RPD	Limit	Qual
Flashpoint	>200	>200	NC	20	

Client: Tetra Tech, Inc.

Job Number: 240-81698-1

Duplicate - Batch: 240-285512

Method: Moisture
Preparation: N/A

Lab Sample ID:	240-81733-A-17 DU	Analysis Batch:	240-285512	Instrument ID:	No Equipment Assigned
Client Matrix:	Solid	Prep Batch:	N/A	Lab File ID:	N/A
Dilution:	1.0	Leach Batch:	N/A	Initial Weight/Volume:	
Analysis Date:	06/30/2017 0830	Units:	%	Final Weight/Volume:	
Prep Date:	N/A				
Leach Date:	N/A				

Analyte	Sample Result/Qual	Result	RPD	Limit	Qual
Percent Solids	96.6	96.4	0.1	20	
Percent Moisture	3.4	3.6	3	20	

DATA REPORTING QUALIFIERS

Client: Tetra Tech, Inc. Job Number: 240-81698-1

Lab Section	Qualifier	Description
GC/MS VOA		
	B	Compound was found in the blank and sample.
	U	Indicates the analyte was analyzed for but not detected.
	F1	MS and/or MSD Recovery is outside acceptance limits.
	F2	MS/MSD RPD exceeds control limits
	E	Result exceeded calibration range.
	J	Result is less than the RL but greater than or equal to the MDL and the concentration is an approximate value.
GC Semi VOA		
	U	Indicates the analyte was analyzed for but not detected.
	p	The %RPD between the primary and confirmation column/detector is >40%. The lower value has been reported.
Metals		
	B	Compound was found in the blank and sample.
	U	Indicates the analyte was analyzed for but not detected.
	J	Result is less than the RL but greater than or equal to the MDL and the concentration is an approximate value.

Client: Tetra Tech, Inc. Job Number: 240-81698-1

QC Association Summary

Lab Sample ID	Client Sample ID	Report Basis	Client Matrix	Method	Prep Batch
GC/MS VOA					
Analysis Batch:240-285711					
LCS 240-285711/6	Lab Control Sample	T	Solid	8260C	
LCS 240-285711/8	Lab Control Sample	T	Solid	8260C	
MB 240-285711/7	Method Blank	T	Solid	8260C	
240-81698-3	WC-FSOIL-062817	T	Solid	8260C	240-285712
240-81698-5	WC-SGEO-062817	T	Solid	8260C	240-285712
240-81733-B-18-D MS	Matrix Spike	T	Solid	8260C	240-285712
240-81733-B-18-E MSD	Matrix Spike Duplicate	T	Solid	8260C	240-285712
Prep Batch: 240-285712					
240-81698-3	WC-FSOIL-062817	T	Solid	5030C	
240-81698-5	WC-SGEO-062817	T	Solid	5030C	
240-81733-B-18-D MS	Matrix Spike	T	Solid	5030C	
240-81733-B-18-E MSD	Matrix Spike Duplicate	T	Solid	5030C	
Analysis Batch:240-285874					
LCS 240-285874/3	Lab Control Sample	T	Water	8260C	
MB 240-285874/6	Method Blank	T	Water	8260C	
240-81698-1	TB-062817	T	Water	8260C	
240-81698-4	WC-FDCON-062817	T	Water	8260C	
240-81698-4MS	Matrix Spike	T	Water	8260C	
240-81698-4MSD	Matrix Spike Duplicate	T	Water	8260C	
Analysis Batch:240-286045					
LCS 240-286045/3	Lab Control Sample	T	Water	8260C	
MB 240-286045/6	Method Blank	T	Water	8260C	
240-81698-6	WC-WGEO-062817	T	Water	8260C	
240-81718-E-1 MS	Matrix Spike	T	Water	8260C	
240-81718-H-1 MSD	Matrix Spike Duplicate	T	Water	8260C	

Report Basis
T = Total

Client: Tetra Tech, Inc. Job Number: 240-81698-1

QC Association Summary

Lab Sample ID	Client Sample ID	Report Basis	Client Matrix	Method	Prep Batch
GC Semi VOA					
Prep Batch: 240-285524					
LCS 240-285524/16-A	Lab Control Sample	T	Water	3520C	
MB 240-285524/15-A	Method Blank	T	Water	3520C	
240-81698-4	WC-FDCON-062817	T	Water	3520C	
240-81698-6	WC-WGEO-062817	T	Water	3520C	
Analysis Batch:240-285854					
LCS 240-285524/16-A	Lab Control Sample	T	Water	8082A	240-285524
MB 240-285524/15-A	Method Blank	T	Water	8082A	240-285524
240-81698-4	WC-FDCON-062817	T	Water	8082A	240-285524
240-81698-6	WC-WGEO-062817	T	Water	8082A	240-285524
Prep Batch: 240-285979					
LCS 240-285979/23-A	Lab Control Sample	T	Solid	3540C	
MB 240-285979/22-A	Method Blank	T	Solid	3540C	
240-81698-3	WC-FSOIL-062817	T	Solid	3540C	
240-81698-5	WC-SGEO-062817	T	Solid	3540C	
240-81698-5MS	Matrix Spike	T	Solid	3540C	
240-81698-5MSD	Matrix Spike Duplicate	T	Solid	3540C	
Analysis Batch:240-286194					
LCS 240-285979/23-A	Lab Control Sample	T	Solid	8082A	240-285979
MB 240-285979/22-A	Method Blank	T	Solid	8082A	240-285979
240-81698-3	WC-FSOIL-062817	T	Solid	8082A	240-285979
240-81698-5	WC-SGEO-062817	T	Solid	8082A	240-285979
240-81698-5MS	Matrix Spike	T	Solid	8082A	240-285979
240-81698-5MSD	Matrix Spike Duplicate	T	Solid	8082A	240-285979

Report Basis
T = Total

Client: Tetra Tech, Inc. Job Number: 240-81698-1

QC Association Summary

Lab Sample ID	Client Sample ID	Report Basis	Client Matrix	Method	Prep Batch
Metals					
Prep Batch: 240-285395					
240-81623-B-1-D MS ^5	Matrix Spike	P	Water	1311	
240-81623-B-1-G MS	Matrix Spike	P	Water	1311	
240-81623-B-1-E MSD ^5	Matrix Spike Duplicate	P	Water	1311	
240-81623-B-1-H MSD	Matrix Spike Duplicate	P	Water	1311	
Prep Batch: 240-286004					
LB 240-286004/1-B	TCLP SPLPE Leachate Blank	P	Water	1311	
LB 240-286004/1-C	TCLP SPLPE Leachate Blank	P	Water	1311	
240-81698-4	WC-FDCON-062817	P	Water	1311	
240-81698-6	WC-WGEO-062817	P	Water	1311	
Prep Batch: 240-286066					
LCS 240-286066/3-A	Lab Control Sample	T	Water	3010A	
MB 240-286066/2-A	Method Blank	T	Water	3010A	
LB 240-286004/1-B	TCLP SPLPE Leachate Blank	P	Water	3010A	240-286004
240-81623-B-1-D MS ^5	Matrix Spike	P	Water	3010A	240-285395
240-81623-B-1-E MSD ^5	Matrix Spike Duplicate	P	Water	3010A	240-285395
240-81698-4	WC-FDCON-062817	P	Water	3010A	240-286004
240-81698-6	WC-WGEO-062817	P	Water	3010A	240-286004
Prep Batch: 240-286067					
LCS 240-286067/3-A	Lab Control Sample	T	Water	7470A	
MB 240-286067/2-A	Method Blank	T	Water	7470A	
LB 240-286004/1-C	TCLP SPLPE Leachate Blank	P	Water	7470A	240-286004
240-81623-B-1-G MS	Matrix Spike	P	Water	7470A	240-285395
240-81623-B-1-H MSD	Matrix Spike Duplicate	P	Water	7470A	240-285395
240-81698-4	WC-FDCON-062817	P	Water	7470A	240-286004
240-81698-6	WC-WGEO-062817	P	Water	7470A	240-286004
Prep Batch: 240-286170					
LB 240-286170/1-B	TCLP SPLPE Leachate Blank	P	Solid	1311	
LB 240-286170/1-C	TCLP SPLPE Leachate Blank	P	Solid	1311	
240-81698-3	WC-FSOIL-062817	P	Solid	1311	
240-81698-5	WC-SGEO-062817	P	Solid	1311	
240-81798-K-1-D MS ^5	Matrix Spike	P	Solid	1311	
240-81798-K-1-G MS	Matrix Spike	P	Solid	1311	
240-81798-K-1-E MSD ^5	Matrix Spike Duplicate	P	Solid	1311	
240-81798-K-1-H MSD	Matrix Spike Duplicate	P	Solid	1311	

Client: Tetra Tech, Inc. Job Number: 240-81698-1

QC Association Summary

Lab Sample ID	Client Sample ID	Report Basis	Client Matrix	Method	Prep Batch
Metals					
Prep Batch: 240-286297					
LCS 240-286297/3-A	Lab Control Sample	T	Water	3010A	
MB 240-286297/2-A	Method Blank	T	Water	3010A	
LB 240-286170/1-B	TCLP SPLPE Leachate Blank	P	Solid	3010A	240-286170
240-81698-3	WC-FSOIL-062817	P	Solid	3010A	240-286170
240-81698-5	WC-SGEO-062817	P	Solid	3010A	240-286170
240-81798-K-1-D MS ^5	Matrix Spike	P	Solid	3010A	240-286170
240-81798-K-1-E MSD ^5	Matrix Spike Duplicate	P	Solid	3010A	240-286170
Prep Batch: 240-286299					
LCS 240-286299/3-A	Lab Control Sample	T	Water	7470A	
MB 240-286299/2-A	Method Blank	T	Water	7470A	
LB 240-286170/1-C	TCLP SPLPE Leachate Blank	P	Solid	7470A	240-286170
240-81698-3	WC-FSOIL-062817	P	Solid	7470A	240-286170
240-81698-5	WC-SGEO-062817	P	Solid	7470A	240-286170
240-81798-K-1-G MS	Matrix Spike	P	Solid	7470A	240-286170
240-81798-K-1-H MSD	Matrix Spike Duplicate	P	Solid	7470A	240-286170
Analysis Batch:240-286324					
LCS 240-286066/3-A	Lab Control Sample	T	Water	6010B	240-286066
MB 240-286066/2-A	Method Blank	T	Water	6010B	240-286066
LB 240-286004/1-B	TCLP SPLPE Leachate Blank	P	Water	6010B	240-286066
240-81623-B-1-D MS ^5	Matrix Spike	P	Water	6010B	240-286066
240-81623-B-1-E MSD ^5	Matrix Spike Duplicate	P	Water	6010B	240-286066
240-81698-4	WC-FDCON-062817	P	Water	6010B	240-286066
240-81698-6	WC-WGEO-062817	P	Water	6010B	240-286066
Analysis Batch:240-286335					
LCS 240-286067/3-A	Lab Control Sample	T	Water	7470A	240-286067
MB 240-286067/2-A	Method Blank	T	Water	7470A	240-286067
LB 240-286004/1-C	TCLP SPLPE Leachate Blank	P	Water	7470A	240-286067
240-81623-B-1-G MS	Matrix Spike	P	Water	7470A	240-286067
240-81623-B-1-H MSD	Matrix Spike Duplicate	P	Water	7470A	240-286067
240-81698-4	WC-FDCON-062817	P	Water	7470A	240-286067
240-81698-6	WC-WGEO-062817	P	Water	7470A	240-286067
Analysis Batch:240-286626					
LB 240-286170/1-B	TCLP SPLPE Leachate Blank	P	Solid	6010B	240-286297
LCS 240-286297/3-A	Lab Control Sample	T	Water	6010B	240-286297
MB 240-286297/2-A	Method Blank	T	Water	6010B	240-286297
240-81698-3	WC-FSOIL-062817	P	Solid	6010B	240-286297
240-81698-5	WC-SGEO-062817	P	Solid	6010B	240-286297
240-81798-K-1-D MS ^5	Matrix Spike	P	Solid	6010B	240-286297
240-81798-K-1-E MSD ^5	Matrix Spike Duplicate	P	Solid	6010B	240-286297

Client: Tetra Tech, Inc. Job Number: 240-81698-1

QC Association Summary

Lab Sample ID	Client Sample ID	Report Basis	Client Matrix	Method	Prep Batch
Metals					
Analysis Batch:240-286634					
LB 240-286170/1-C	TCLP SPLPE Leachate Blank	P	Solid	7470A	240-286299
LCS 240-286299/3-A	Lab Control Sample	T	Water	7470A	240-286299
MB 240-286299/2-A	Method Blank	T	Water	7470A	240-286299
240-81698-3	WC-FSOIL-062817	P	Solid	7470A	240-286299
240-81698-5	WC-SGEO-062817	P	Solid	7470A	240-286299
240-81798-K-1-G MS	Matrix Spike	P	Solid	7470A	240-286299
240-81798-K-1-H MSD	Matrix Spike Duplicate	P	Solid	7470A	240-286299

Report Basis
P = TCLP
T = Total

General Chemistry					
Analysis Batch:240-285512					
240-81698-3	WC-FSOIL-062817	T	Solid	Moisture	
240-81698-5	WC-SGEO-062817	T	Solid	Moisture	
240-81733-A-17 DU	Duplicate	T	Solid	Moisture	
Analysis Batch:240-286224					
LCS 240-286224/1	Lab Control Sample	T	Solid	1010A	
240-81698-3	WC-FSOIL-062817	T	Solid	1010A	
240-81698-5	WC-SGEO-062817	T	Solid	1010A	
240-81858-A-2 DU	Duplicate	T	Solid	1010A	
Analysis Batch:240-286734					
LCS 240-286734/1	Lab Control Sample	T	Water	1010A	
240-81698-4	WC-FDCON-062817	T	Water	1010A	
240-81698-6	WC-WGEO-062817	T	Water	1010A	
240-82056-P-9 DU	Duplicate	T	Water	1010A	

Report Basis
T = Total

Client: Tetra Tech, Inc. Job Number: 240-81698-1

Laboratory Chronicle

Lab ID: 240-81698-1 **Client ID: TB-062817**

Sample Date/Time: 06/28/2017 00:00 Received Date/Time: 06/29/2017 09:20

Method	Bottle ID	Run	Analysis Batch	Prep Batch	Date Prepared / Analyzed	Dil	Lab	Analyst
P:5030C	240-81698-A-1		240-285874		07/05/2017 13:13	1	TAL CAN	HMB
A:8260C	240-81698-A-1		240-285874		07/05/2017 13:13	1	TAL CAN	HMB

Lab ID: 240-81698-3 **Client ID: WC-FSOIL-062817**

Sample Date/Time: 06/28/2017 08:40 Received Date/Time: 06/29/2017 09:20

Method	Bottle ID	Run	Analysis Batch	Prep Batch	Date Prepared / Analyzed	Dil	Lab	Analyst
P:5030C	240-81698-B-3-B		240-285711	240-285712	07/03/2017 03:32	1	TAL CAN	TJL2
A:8260C	240-81698-B-3-B		240-285711	240-285712	07/03/2017 09:20	1	TAL CAN	TJL2
P:3540C	240-81698-C-3-A		240-286194	240-285979	07/05/2017 13:32	1	TAL CAN	DT
A:8082A	240-81698-C-3-A		240-286194	240-285979	07/07/2017 07:22	1	TAL CAN	LSH
P:3010A	240-81698-C-3-C		240-286626	240-286297	07/07/2017 14:00	1	TAL CAN	WKD
A:6010B	240-81698-C-3-C		240-286626	240-286297	07/11/2017 00:09	1	TAL CAN	KLC
P:7470A	240-81698-C-3-D		240-286634	240-286299	07/07/2017 14:00	1	TAL CAN	WKD
A:7470A	240-81698-C-3-D		240-286634	240-286299	07/10/2017 13:28	1	TAL CAN	DTN
A:1010A	240-81698-C-3		240-286224		07/07/2017 11:23	1	TAL CAN	TPH
A:Moisture	240-81698-A-3		240-285512		06/30/2017 08:30	1	TAL CAN	PW

Lab ID: 240-81698-4 **Client ID: WC-FDCON-062817**

Sample Date/Time: 06/28/2017 08:55 Received Date/Time: 06/29/2017 09:20

Method	Bottle ID	Run	Analysis Batch	Prep Batch	Date Prepared / Analyzed	Dil	Lab	Analyst
P:5030C	240-81698-B-4		240-285874		07/05/2017 13:36	6.25	TAL CAN	HMB
A:8260C	240-81698-B-4		240-285874		07/05/2017 13:36	6.25	TAL CAN	HMB
P:3520C	240-81698-F-4-A		240-285854	240-285524	06/30/2017 09:17	1	TAL CAN	cs
A:8082A	240-81698-F-4-A		240-285854	240-285524	07/05/2017 14:23	1	TAL CAN	KMG
P:3010A	240-81698-H-4-B		240-286324	240-286066	07/06/2017 14:00	1	TAL CAN	WKD
A:6010B	240-81698-H-4-B		240-286324	240-286066	07/07/2017 14:34	1	TAL CAN	KLC
P:7470A	240-81698-H-4-C		240-286335	240-286067	07/06/2017 14:00	1	TAL CAN	WKD
A:7470A	240-81698-H-4-C		240-286335	240-286067	07/07/2017 13:43	1	TAL CAN	DTN
A:1010A	240-81698-D-4		240-286734		07/11/2017 14:53	1	TAL CAN	BLW

Lab ID: 240-81698-4 MS **Client ID: WC-FDCON-062817**

Sample Date/Time: 06/28/2017 08:55 Received Date/Time: 06/29/2017 09:20

Method	Bottle ID	Run	Analysis Batch	Prep Batch	Date Prepared / Analyzed	Dil	Lab	Analyst
P:5030C	240-81698-B-4 MS		240-285874		07/05/2017 17:05	6.25	TAL CAN	HMB
A:8260C	240-81698-B-4 MS		240-285874		07/05/2017 17:05	6.25	TAL CAN	HMB

Client: Tetra Tech, Inc. Job Number: 240-81698-1

Laboratory Chronicle

Lab ID: 240-81698-4 MSD **Client ID: WC-FDCON-062817**

Sample Date/Time: 06/28/2017 08:55 Received Date/Time: 06/29/2017 09:20

Method	Bottle ID	Run	Analysis Batch	Prep Batch	Date Prepared / Analyzed	Dil	Lab	Analyst
P:5030C	240-81698-B-4 MSD		240-285874		07/05/2017 17:28	6.25	TAL CAN	HMB
A:8260C	240-81698-B-4 MSD		240-285874		07/05/2017 17:28	6.25	TAL CAN	HMB

Lab ID: 240-81698-5 **Client ID: WC-SGEO-062817**

Sample Date/Time: 06/28/2017 08:15 Received Date/Time: 06/29/2017 09:20

Method	Bottle ID	Run	Analysis Batch	Prep Batch	Date Prepared / Analyzed	Dil	Lab	Analyst
P:5030C	240-81698-B-5-B		240-285711	240-285712	07/03/2017 03:32	1	TAL CAN	TJL2
A:8260C	240-81698-B-5-B		240-285711	240-285712	07/03/2017 09:42	1	TAL CAN	TJL2
P:3540C	240-81698-C-5-A		240-286194	240-285979	07/05/2017 13:32	1	TAL CAN	DT
A:8082A	240-81698-C-5-A		240-286194	240-285979	07/07/2017 07:42	1	TAL CAN	LSH
P:3010A	240-81698-D-5-B		240-286626	240-286297	07/07/2017 14:00	1	TAL CAN	WKD
A:6010B	240-81698-D-5-B		240-286626	240-286297	07/11/2017 00:22	1	TAL CAN	KLC
P:7470A	240-81698-D-5-C		240-286634	240-286299	07/07/2017 14:00	1	TAL CAN	WKD
A:7470A	240-81698-D-5-C		240-286634	240-286299	07/10/2017 13:30	1	TAL CAN	DTN
A:1010A	240-81698-C-5		240-286224		07/07/2017 11:52	1	TAL CAN	TPH
A:Moisture	240-81698-A-5		240-285512		06/30/2017 08:30	1	TAL CAN	PW

Lab ID: 240-81698-5 MS **Client ID: WC-SGEO-062817**

Sample Date/Time: 06/28/2017 08:15 Received Date/Time: 06/29/2017 09:20

Method	Bottle ID	Run	Analysis Batch	Prep Batch	Date Prepared / Analyzed	Dil	Lab	Analyst
P:3540C	240-81698-C-5-B MS		240-286194	240-285979	07/05/2017 13:32	1	TAL CAN	DT
A:8082A	240-81698-C-5-B MS		240-286194	240-285979	07/07/2017 08:01	1	TAL CAN	LSH

Lab ID: 240-81698-5 MSD **Client ID: WC-SGEO-062817**

Sample Date/Time: 06/28/2017 08:15 Received Date/Time: 06/29/2017 09:20

Method	Bottle ID	Run	Analysis Batch	Prep Batch	Date Prepared / Analyzed	Dil	Lab	Analyst
P:3540C	240-81698-C-5-C MSD		240-286194	240-285979	07/05/2017 13:32	1	TAL CAN	DT
A:8082A	240-81698-C-5-C MSD		240-286194	240-285979	07/07/2017 08:21	1	TAL CAN	LSH

Client: Tetra Tech, Inc. Job Number: 240-81698-1

Laboratory Chronicle

Lab ID: 240-81698-6 **Client ID: WC-WGEO-062817**

Sample Date/Time: 06/28/2017 08:25 Received Date/Time: 06/29/2017 09:20

Method	Bottle ID	Run	Analysis Batch	Prep Batch	Date Prepared / Analyzed	Dil	Lab	Analyst
P:5030C	240-81698-C-6		240-286045		07/06/2017 13:58	50	TAL CAN	HMB
A:8260C	240-81698-C-6		240-286045		07/06/2017 13:58	50	TAL CAN	HMB
P:3520C	240-81698-H-6-A		240-285854	240-285524	06/30/2017 09:17	1	TAL CAN	cs
A:8082A	240-81698-H-6-A		240-285854	240-285524	07/05/2017 14:42	1	TAL CAN	KMG
P:3010A	240-81698-F-6-B		240-286324	240-286066	07/06/2017 14:00	1	TAL CAN	WKD
A:6010B	240-81698-F-6-B		240-286324	240-286066	07/07/2017 14:38	1	TAL CAN	KLC
P:7470A	240-81698-F-6-C		240-286335	240-286067	07/06/2017 14:00	1	TAL CAN	WKD
A:7470A	240-81698-F-6-C		240-286335	240-286067	07/07/2017 13:45	1	TAL CAN	DTN
A:1010A	240-81698-D-6		240-286734		07/11/2017 15:12	1	TAL CAN	BLW

Lab ID: MB **Client ID: N/A**

Sample Date/Time: N/A Received Date/Time: N/A

Method	Bottle ID	Run	Analysis Batch	Prep Batch	Date Prepared / Analyzed	Dil	Lab	Analyst
A:8260C	MB 240-285711/7		240-285711		07/03/2017 03:31	1	TAL CAN	TJL2
P:5030C	MB 240-285874/6		240-285874		07/05/2017 08:32	1	TAL CAN	HMB
A:8260C	MB 240-285874/6		240-285874		07/05/2017 08:32	1	TAL CAN	HMB
P:5030C	MB 240-286045/6		240-286045		07/06/2017 09:38	1	TAL CAN	HMB
A:8260C	MB 240-286045/6		240-286045		07/06/2017 09:38	1	TAL CAN	HMB
P:3520C	MB 240-285524/15-A		240-285854	240-285524	06/30/2017 09:17	1	TAL CAN	cs
A:8082A	MB 240-285524/15-A		240-285854	240-285524	07/05/2017 17:13	1	TAL CAN	KMG
P:3540C	MB 240-285979/22-A		240-286194	240-285979	07/05/2017 13:32	1	TAL CAN	DT
A:8082A	MB 240-285979/22-A		240-286194	240-285979	07/07/2017 13:18	1	TAL CAN	LSH
P:3010A	MB 240-286066/2-A		240-286324	240-286066	07/06/2017 14:00	1	TAL CAN	WKD
A:6010B	MB 240-286066/2-A		240-286324	240-286066	07/07/2017 11:03	1	TAL CAN	KLC
P:3010A	MB 240-286297/2-A		240-286626	240-286297	07/07/2017 14:00	1	TAL CAN	WKD
A:6010B	MB 240-286297/2-A		240-286626	240-286297	07/10/2017 22:40	1	TAL CAN	KLC
P:7470A	MB 240-286067/2-A		240-286335	240-286067	07/06/2017 14:00	1	TAL CAN	WKD
A:7470A	MB 240-286067/2-A		240-286335	240-286067	07/07/2017 12:16	1	TAL CAN	DTN
P:7470A	MB 240-286299/2-A		240-286634	240-286299	07/07/2017 14:00	1	TAL CAN	WKD
A:7470A	MB 240-286299/2-A		240-286634	240-286299	07/10/2017 12:51	1	TAL CAN	DTN

Client: Tetra Tech, Inc. Job Number: 240-81698-1

Laboratory Chronicle

Lab ID: LB **Client ID: N/A**

Sample Date/Time: N/A Received Date/Time: N/A

Method	Bottle ID	Run	Analysis Batch	Prep Batch	Date Prepared / Analyzed	Dil	Lab	Analyst
P:3010A	LB 240-286004/1-B		240-286324	240-286066	07/06/2017 14:00	1	TAL CAN	WKD
A:6010B	LB 240-286004/1-B		240-286324	240-286066	07/07/2017 10:58	1	TAL CAN	KLC
P:3010A	LB 240-286170/1-B		240-286626	240-286297	07/07/2017 14:00	1	TAL CAN	WKD
A:6010B	LB 240-286170/1-B		240-286626	240-286297	07/10/2017 22:36	1	TAL CAN	KLC
P:7470A	LB 240-286004/1-C		240-286335	240-286067	07/06/2017 14:00	1	TAL CAN	WKD
A:7470A	LB 240-286004/1-C		240-286335	240-286067	07/07/2017 12:14	1	TAL CAN	DTN
P:7470A	LB 240-286170/1-C		240-286634	240-286299	07/07/2017 14:00	1	TAL CAN	WKD
A:7470A	LB 240-286170/1-C		240-286634	240-286299	07/10/2017 12:49	1	TAL CAN	DTN

Lab ID: LCS **Client ID: N/A**

Sample Date/Time: N/A Received Date/Time: N/A

Method	Bottle ID	Run	Analysis Batch	Prep Batch	Date Prepared / Analyzed	Dil	Lab	Analyst
A:8260C	LCS 240-285711/6		240-285711		07/03/2017 03:10	1	TAL CAN	TJL2
A:8260C	LCS 240-285711/8		240-285711		07/03/2017 03:53	1	TAL CAN	TJL2
P:5030C	LCS 240-285874/3		240-285874		07/05/2017 07:20	1	TAL CAN	HMB
A:8260C	LCS 240-285874/3		240-285874		07/05/2017 07:20	1	TAL CAN	HMB
P:5030C	LCS 240-286045/3		240-286045		07/06/2017 08:29	1	TAL CAN	HMB
A:8260C	LCS 240-286045/3		240-286045		07/06/2017 08:29	1	TAL CAN	HMB
P:3520C	LCS 240-285524/16-A		240-285854	240-285524	06/30/2017 09:17	1	TAL CAN	cs
A:8082A	LCS 240-285524/16-A		240-285854	240-285524	07/05/2017 17:32	1	TAL CAN	KMG
P:3540C	LCS 240-285979/23-A		240-286194	240-285979	07/05/2017 13:32	1	TAL CAN	DT
A:8082A	LCS 240-285979/23-A		240-286194	240-285979	07/07/2017 13:37	1	TAL CAN	LSH
P:3010A	LCS 240-286066/3-A		240-286324	240-286066	07/06/2017 14:00	1	TAL CAN	WKD
A:6010B	LCS 240-286066/3-A		240-286324	240-286066	07/07/2017 11:07	1	TAL CAN	KLC
P:3010A	LCS 240-286297/3-A		240-286626	240-286297	07/07/2017 14:00	1	TAL CAN	WKD
A:6010B	LCS 240-286297/3-A		240-286626	240-286297	07/10/2017 22:45	1	TAL CAN	KLC
P:7470A	LCS 240-286067/3-A		240-286335	240-286067	07/06/2017 14:00	1	TAL CAN	WKD
A:7470A	LCS 240-286067/3-A		240-286335	240-286067	07/07/2017 12:18	1	TAL CAN	DTN
P:7470A	LCS 240-286299/3-A		240-286634	240-286299	07/07/2017 14:00	1	TAL CAN	WKD
A:7470A	LCS 240-286299/3-A		240-286634	240-286299	07/10/2017 12:53	1	TAL CAN	DTN
A:1010A	LCS 240-286224/1		240-286224		07/07/2017 07:28	1	TAL CAN	TPH
A:1010A	LCS 240-286734/1		240-286734		07/11/2017 13:15	1	TAL CAN	BLW

Client: Tetra Tech, Inc. Job Number: 240-81698-1

Laboratory Chronicle

Lab ID: MS **Client ID: N/A**

Sample Date/Time: 06/27/2017 10:50 Received Date/Time: 06/29/2017 09:20

Method	Bottle ID	Run	Analysis Batch	Prep Batch	Date Prepared / Analyzed	Dil	Lab	Analyst
P:5030C	240-81733-B-18-D MS		240-285711	240-285712	07/03/2017 03:32	1	TAL CAN	TJL2
A:8260C	240-81733-B-18-D MS		240-285711	240-285712	07/03/2017 08:15	1	TAL CAN	TJL2
P:5030C	240-81718-E-1 MS		240-286045		07/06/2017 17:05	1	TAL CAN	HMB
A:8260C	240-81718-E-1 MS		240-286045		07/06/2017 17:05	1	TAL CAN	HMB
P:3010A	240-81623-B-1-D MS ^5		240-286324	240-286066	07/06/2017 14:00	5	TAL CAN	WKD
A:6010B	240-81623-B-1-D MS ^5		240-286324	240-286066	07/07/2017 11:25	5	TAL CAN	KLC
P:3010A	240-81798-K-1-D MS ^5		240-286626	240-286297	07/07/2017 14:00	5	TAL CAN	WKD
A:6010B	240-81798-K-1-D MS ^5		240-286626	240-286297	07/10/2017 23:02	5	TAL CAN	KLC
P:7470A	240-81623-B-1-G MS		240-286335	240-286067	07/06/2017 14:00	1	TAL CAN	WKD
A:7470A	240-81623-B-1-G MS		240-286335	240-286067	07/07/2017 12:24	1	TAL CAN	DTN
P:7470A	240-81798-K-1-G MS		240-286634	240-286299	07/07/2017 14:00	1	TAL CAN	WKD
A:7470A	240-81798-K-1-G MS		240-286634	240-286299	07/10/2017 12:57	1	TAL CAN	DTN

Lab ID: MSD **Client ID: N/A**

Sample Date/Time: 06/27/2017 10:50 Received Date/Time: 06/29/2017 09:20

Method	Bottle ID	Run	Analysis Batch	Prep Batch	Date Prepared / Analyzed	Dil	Lab	Analyst
P:5030C	240-81733-B-18-E MSD		240-285711	240-285712	07/03/2017 03:32	1	TAL CAN	TJL2
A:8260C	240-81733-B-18-E MSD		240-285711	240-285712	07/03/2017 08:37	1	TAL CAN	TJL2
P:5030C	240-81718-H-1 MSD		240-286045		07/06/2017 17:31	1	TAL CAN	HMB
A:8260C	240-81718-H-1 MSD		240-286045		07/06/2017 17:31	1	TAL CAN	HMB
P:3010A	240-81623-B-1-E MSD ^5		240-286324	240-286066	07/06/2017 14:00	5	TAL CAN	WKD
A:6010B	240-81623-B-1-E MSD ^5		240-286324	240-286066	07/07/2017 11:30	5	TAL CAN	KLC
P:3010A	240-81798-K-1-E MSD ^5		240-286626	240-286297	07/07/2017 14:00	5	TAL CAN	WKD
A:6010B	240-81798-K-1-E MSD ^5		240-286626	240-286297	07/10/2017 23:07	5	TAL CAN	KLC
P:7470A	240-81623-B-1-H MSD		240-286335	240-286067	07/06/2017 14:00	1	TAL CAN	WKD
A:7470A	240-81623-B-1-H MSD		240-286335	240-286067	07/07/2017 12:26	1	TAL CAN	DTN
P:7470A	240-81798-K-1-H MSD		240-286634	240-286299	07/07/2017 14:00	1	TAL CAN	WKD
A:7470A	240-81798-K-1-H MSD		240-286634	240-286299	07/10/2017 12:59	1	TAL CAN	DTN

Client: Tetra Tech, Inc. Job Number: 240-81698-1

Laboratory Chronicle

Lab ID: DU **Client ID: N/A**

Sample Date/Time: 06/29/2017 07:00 Received Date/Time: 07/01/2017 09:30

Method	Bottle ID	Run	Analysis Batch	Prep Batch	Date Prepared / Analyzed	Dil	Lab	Analyst
A:1010A	240-81858-A-2 DU		240-286224		07/07/2017 07:57	1	TAL CAN	TPH
A:1010A	240-82056-P-9 DU		240-286734		07/11/2017 13:54	1	TAL CAN	BLW
A:Moisture	240-81733-A-17 DU		240-285512		06/30/2017 08:30	1	TAL CAN	PW

Lab ID: SD **Client ID: N/A**

Sample Date/Time: 06/27/2017 15:00 Received Date/Time: 06/28/2017 08:00

Method	Bottle ID	Run	Analysis Batch	Prep Batch	Date Prepared / Analyzed	Dil	Lab	Analyst
P:3010A	240-81623-B-1-C SD ^5		240-286324	240-286066	07/06/2017 14:00	5	TAL CAN	WKD
A:6010B	240-81623-B-1-C SD ^5		240-286324	240-286066	07/07/2017 11:16	5	TAL CAN	KLC
P:3010A	240-81798-K-1-C SD ^5		240-286626	240-286297	07/07/2017 14:00	5	TAL CAN	WKD
A:6010B	240-81798-K-1-C SD ^5		240-286626	240-286297	07/10/2017 22:53	5	TAL CAN	KLC

Lab References:
TAL CAN = TestAmerica Canton

REAGENT TRACEABILITY SUMMARY

Lab Name: TestAmerica Canton Job No.: 240-81698-1

SDG No.:

Reagent ID	Exp Date	Prep Date	Dilutant Used	Reagent Final Volume	Parent Reagent		Analyte	Concentration
					Reagent ID	Volume Added		
ex10PPMSPK_00027	10/27/17	05/25/17	MEOH, Lot 0000127999	1000 mL	ex1016/1260st_00007	10 mL	Aroclor-1016	10 ug/mL
							Aroclor-1260	10 ug/mL
.ex1016/1260st_00007	10/30/22		Restek, Lot A0120262		(Purchased Reagent)		Aroclor-1016	1000 ug/mL
							Aroclor-1260	1000 ug/mL
ex2/.2SURRW_00086	06/01/18	06/07/17	MEOH, Lot 0000147462	2000 mL	exPESTSURRstd_00005	2 mL	DCB Decachlorobiphenyl	0.2 ug/mL
							Tetrachloro-m-xylene	0.2 ug/mL
.exPESTSURRstd_00005	12/30/22		Restek, Lot A0121594		(Purchased Reagent)		DCB Decachlorobiphenyl	200 ug/mL
							Tetrachloro-m-xylene	200 ug/mL
EXpH(0-14)_00019	05/26/22		Merck, Lot HC601355		(Purchased Reagent)		pH at time of analysis	1 No Unit
EXTCLPBUFF1_01191	07/05/17	07/05/17	DIWATER, Lot 07052017	48 L	EXTCLP5MNAOH_00033	751.49 g	Sodium Hydroxide	0.313121 %
					EXTCLPACETIC_00024	273.6 mL	Acetic acid	0.57 %
.EXTCLP5MNAOH_00033	04/22/18	12/12/16	DIWATER, Lot 12122016	3 L	EXTCLPNAOH_00025	600 g	Sodium Hydroxide	200 mol/L
..EXTCLPNAOH_00025	04/22/18		Macron, Lot 0000146370		(Purchased Reagent)		Sodium Hydroxide	1 g/g
.EXTCLPACETIC_00024	11/10/20		Macron, Lot 00000130626		(Purchased Reagent)		Acetic acid	1 g/g
EXTCLPBUFF1_01192	07/05/17	07/05/17	DIWATER, Lot 07052017	48 L	EXTCLP5MNAOH_00033	751.49 g	Sodium Hydroxide	0.313121 %
					EXTCLPACETIC_00024	273.6 mL	Acetic acid	0.57 %
.EXTCLP5MNAOH_00033	04/22/18	12/12/16	DIWATER, Lot 12122016	3 L	EXTCLPNAOH_00025	600 g	Sodium Hydroxide	200 mol/L
..EXTCLPNAOH_00025	04/22/18		Macron, Lot 0000146370		(Purchased Reagent)		Sodium Hydroxide	1 g/g
.EXTCLPACETIC_00024	11/10/20		Macron, Lot 00000130626		(Purchased Reagent)		Acetic acid	1 g/g
EXTCLPBUFF1_01194	07/06/17	07/06/17	DIWATER, Lot 07062017	48 L	EXTCLP5MNAOH_00033	751.49 g	Sodium Hydroxide	0.313121 %
					EXTCLPACETIC_00024	273.6 mL	Acetic acid	0.57 %
.EXTCLP5MNAOH_00033	04/22/18	12/12/16	DIWATER, Lot 12122016	3 L	EXTCLPNAOH_00025	600 g	Sodium Hydroxide	200 mol/L
..EXTCLPNAOH_00025	04/22/18		Macron, Lot 0000146370		(Purchased Reagent)		Sodium Hydroxide	1 g/g
.EXTCLPACETIC_00024	11/10/20		Macron, Lot 00000130626		(Purchased Reagent)		Acetic acid	1 g/g
EXTCLPBUFF1_01195	07/06/17	07/06/17	DIWATER, Lot 07062017	48 L	EXTCLP5MNAOH_00033	751.49 g	Sodium Hydroxide	0.313121 %
					EXTCLPACETIC_00024	273.6 mL	Acetic acid	0.57 %
.EXTCLP5MNAOH_00033	04/22/18	12/12/16	DIWATER, Lot 12122016	3 L	EXTCLPNAOH_00025	600 g	Sodium Hydroxide	200 mol/L
..EXTCLPNAOH_00025	04/22/18		Macron, Lot 0000146370		(Purchased Reagent)		Sodium Hydroxide	1 g/g
.EXTCLPACETIC_00024	11/10/20		Macron, Lot 00000130626		(Purchased Reagent)		Acetic acid	1 g/g
EXTCLPFILTERS_00033	05/26/22		Whatman, Lot 9769808		(Purchased Reagent)		Prep Analyte	100 Filter
EXTCLPHCLW_00055	05/12/19	05/22/17	DIWATER, Lot 05222017	2000 mL	MTTMHCL_00156	166 mL	Hydrogen Chloride	83 mol/L
.MTTMHCL_00156	05/12/19		JT Baker(Avantor), Lot 0000162118		(Purchased Reagent)		Hydrogen Chloride	100 %
K2S2O8_00065	06/13/19	06/13/17	DIWATER, Lot DIWATER	2.5 L	MTK2S208_00038	125 g	Potassium persulfate	0.05 g/g
.MTK2S208_00038	12/15/22		Macron, Lot 0000070212		(Purchased Reagent)		Potassium persulfate	1 g/g
MT1to1HCL_00070	09/16/17	03/16/17	DIWATER, Lot DIWATER	2500 mL	MTTMHCL_00148	1250 mL	Hydrogen Chloride	0.5 mL/mL
.MTTMHCL_00148	03/11/19		JT Baker(Avantor), Lot 0000162118		(Purchased Reagent)		Hydrogen Chloride	100 %
MT6500ICV_00038	12/14/17	06/14/17	DIWATER, Lot DIWATER	1000 mL	MTTRICV3_00008	6 mL	Barium	1500 ug/L
							Chromium	1500 ug/L
					MTTRICV5_00014	1.5 mL	Arsenic	375 ug/L
							Cadmium	375 ug/L
							Lead	375 ug/L
							Selenium	375 ug/L
					MTTRICVAG_00007	7.5 mL	Silver	750 ug/L
.MTTRICV3_00008	05/22/18		CPI, Lot 1099181		(Purchased Reagent)		Barium	250 mg/L

REAGENT TRACEABILITY SUMMARY

Lab Name: TestAmerica Canton Job No.: 240-81698-1

SDG No.:

Reagent ID	Exp Date	Prep Date	Dilutant Used	Reagent Final Volume	Parent Reagent		Analyte	Concentration
					Reagent ID	Volume Added		
							Chromium	250 mg/L
.MTTRICV5_00014	05/21/18	CPI, Lot 1099109			(Purchased Reagent)		Arsenic	250 ug/mL
							Cadmium	250 ug/mL
							Lead	250 ug/mL
							Selenium	250 ug/mL
.MTTRICVAG_00007	02/26/18	CPI, Lot 1095561			(Purchased Reagent)		Silver	100 mg/L
MTAGSPIKEW_00073	12/08/18	06/13/17	DIWATER, Lot DIWATER	1000 mL	MTAG_00007	2.5 mL	Silver	2500 ug/L
					MTTMHNO3_00120	50 mL	Nitric acid	50000000 ug/L
.MTAG_00007	12/08/18	HIGH PURITY STANDARDS, Lot 1713128			(Purchased Reagent)		Silver	1000 ug/mL
.MTTMHNO3_00120	05/25/19	Macron/Avantor, Lot 0000162025			(Purchased Reagent)		Nitric acid	100 %
MTH2S04_00044	11/20/21	Macron, Lot 0000161554			(Purchased Reagent)		Sulfuric acid	100 %
MTHGCALW_01549	07/06/17	07/06/17	DIWATER, Lot DIWATER	200 mL	MTHGCAL_00031	2 mL	Mercury	100 ug/L
					MTTMHNO3_00123	0.25 mL	Nitric acid	1250000 ug/L
.MTHGCAL_00031	04/18/18	High Purity, Lot 1706613			(Purchased Reagent)		Mercury	10 ug/mL
.MTTMHNO3_00123	06/26/19	Macron/Avantor, Lot 0000162025			(Purchased Reagent)		Nitric acid	100 %
MTHGCALW_01550	07/07/17	07/07/17	DIWATER, Lot DIWATER	200 mL	MTHGCAL_00031	2 mL	Mercury	100 ug/L
					MTTMHNO3_00123	0.25 mL	Nitric acid	1250000 ug/L
.MTHGCAL_00031	04/18/18	High Purity, Lot 1706613			(Purchased Reagent)		Mercury	10 ug/mL
.MTTMHNO3_00123	06/26/19	Macron/Avantor, Lot 0000162025			(Purchased Reagent)		Nitric acid	100 %
MTHGCALW_01551	07/10/17	07/10/17	DIWATER, Lot DIWATER	200 mL	MTHGCAL_00031	2 mL	Mercury	100 ug/L
					MTTMHNO3_00123	0.25 mL	Nitric acid	1250000 ug/L
.MTHGCAL_00031	04/18/18	High Purity, Lot 1706613			(Purchased Reagent)		Mercury	10 ug/mL
.MTTMHNO3_00123	06/26/19	Macron/Avantor, Lot 0000162025			(Purchased Reagent)		Nitric acid	100 %
MTHgICV_00001_00197	07/07/17	07/07/17	DIWATER, Lot DIWATER	100 mL	LLHg-ICV_00005	1 mL	Mercury	0.1 ug/mL
					MTTMHNO3_00123	0.125 mL	Nitric acid	1250 ug/mL
.LLHg-ICV_00005	06/07/18	Elemental Scientific, Lot 1712311			(Purchased Reagent)		Mercury	10 ug/mL
.MTTMHNO3_00123	06/26/19	Macron/Avantor, Lot 0000162025			(Purchased Reagent)		Nitric acid	100 %
MTHgICV_00001_00198	07/10/17	07/10/17	DIWATER, Lot DIWATER	100 mL	LLHg-ICV_00005	1 mL	Mercury	0.1 ug/mL
					MTTMHNO3_00123	0.125 mL	Nitric acid	1250 ug/mL
.LLHg-ICV_00005	06/07/18	Elemental Scientific, Lot 1712311			(Purchased Reagent)		Mercury	10 ug/mL
.MTTMHNO3_00123	06/26/19	Macron/Avantor, Lot 0000162025			(Purchased Reagent)		Nitric acid	100 %
MTICP1_00064	09/29/17	05/23/17	DIWATER, Lot DI WATER	1000 mL	MTICPSPIKE1A_00011	50 mL	Al	100000 ug/L
							Arsenic	100000 ug/L
							B	50000 ug/L
							Barium	100000 ug/L
							Be	2500 ug/L
							Cadmium	2500 ug/L
							Chromium	10000 ug/L
							Co	25000 ug/L
							Cu	12500 ug/L
							Fe	50000 ug/L
							Lead	25000 ug/L
							Mn	25000 ug/L
							Ni	25000 ug/L
							Selenium	100000 ug/L

REAGENT TRACEABILITY SUMMARY

Lab Name: TestAmerica Canton Job No.: 240-81698-1

SDG No.:

Reagent ID	Exp Date	Prep Date	Dilutant Used	Reagent Final Volume	Parent Reagent		Analyte	Concentration
					Reagent ID	Volume Added		
							Tl	100000 ug/L
							V	25000 ug/L
							Zn	25000 ug/L
					MTICPSPIKEB_00010	50 mL	Mo	50000 ug/L
							Sb	25000 ug/L
							Sn	100000 ug/L
							Ti	50000 ug/L
					MTICPSpikeOdd_00007	50 mL	Li	50000 ug/L
							Si	50000 ug/L
							SiO2	107000 ug/L
							Sr	50000 ug/L
					MTTMHNO3_00119	50 mL	Nitric acid	50000000 ug/L
.MTICPSPIKE1A_00011	09/29/17	High Purity Standards, Lot 1626724			(Purchased Reagent)		Al	2000 ug/mL
							Arsenic	2000 ug/mL
							B	1000 ug/mL
							Barium	2000 ug/mL
							Be	50 ug/mL
							Cadmium	50 ug/mL
							Chromium	200 ug/mL
							Co	500 ug/mL
							Cu	250 ug/mL
							Fe	1000 ug/mL
							Lead	500 ug/mL
							Mn	500 ug/mL
							Ni	500 ug/mL
							Selenium	2000 ug/mL
							Tl	2000 ug/mL
							V	500 ug/mL
							Zn	500 ug/mL
.MTICPSPIKEB_00010	09/29/17	High Purity Standards, Lot 1626731			(Purchased Reagent)		Mo	1000 ug/mL
							Sb	500 ug/mL
							Sn	2000 ug/mL
							Ti	1000 ug/mL
.MTICPSpikeOdd_00007	09/29/17	High Purity Standards, Lot 1626736			(Purchased Reagent)		Li	1000 ug/mL
							Si	1000 ug/mL
							SiO2	2140 ug/mL
							Sr	1000 ug/mL
.MTTMHNO3_00119	05/16/19	Macron/Avantor, Lot 0000162025			(Purchased Reagent)		Nitric acid	100 %
MTICP2A_00073	12/22/17	06/22/17	DIWATER, Lot NONE	1000 mL	MTTMHNO3_00122	50 mL	Nitric acid	50000 mg/L
					MTTRCAL2_00016	250 mL	Ca	2500 mg/L
							K	2500 mg/L
							Mg	2500 mg/L
							Na	2500 mg/L
.MTTMHNO3_00122	06/15/19	Macron/Avantor, Lot 0000162025			(Purchased Reagent)		Nitric acid	100 %
.MTTRCAL2_00016	01/06/18	HIGH PURITY STANDARDS, Lot 1625030			(Purchased Reagent)		Ca	10000 ug/mL
							K	10000 ug/mL
							Mg	10000 ug/mL

REAGENT TRACEABILITY SUMMARY

Lab Name: TestAmerica Canton Job No.: 240-81698-1

SDG No.:

Reagent ID	Exp Date	Prep Date	Dilutant Used	Reagent Final Volume	Parent Reagent		Analyte	Concentration
					Reagent ID	Volume Added		
							Na	10000 ug/mL
MTICPCCV_00103	12/22/17	06/22/17	DIWATER, Lot DIWATER	2000 mL	MTICPCCV1_00018	200 mL	Arsenic	500 ug/L
							Barium	2000 ug/L
							Cadmium	500 ug/L
							Chromium	2000 ug/L
							Lead	500 ug/L
							Selenium	500 ug/L
					MTICPCCV2_00018	200 mL	Silver	1000 ug/L
.MTICPCCV1_00018	05/10/18	INORGANIC VENTURES, Lot M2-MEB658053			(Purchased Reagent)		Arsenic	5000 ug/L
							Barium	20000 ug/L
							Cadmium	5000 ug/L
							Chromium	20000 ug/L
							Lead	5000 ug/L
							Selenium	5000 ug/L
.MTICPCCV2_00018	05/10/18	INORGANIC VENTURES, Lot m2-meb658054			(Purchased Reagent)		Silver	10000 ug/L
MTICPCCV_00104	01/07/18	07/07/17	DIWATER, Lot DIWATER	2000 mL	MTICPCCV1_00018	195 mL	Arsenic	500 ug/L
							Barium	2000 ug/L
							Cadmium	500 ug/L
							Chromium	2000 ug/L
							Lead	500 ug/L
							Selenium	500 ug/L
					MTICPCCV1_00019	5 mL	Arsenic	500 ug/L
							Barium	2000 ug/L
							Cadmium	500 ug/L
							Chromium	2000 ug/L
							Lead	500 ug/L
							Selenium	500 ug/L
					MTICPCCV2_00018	195 mL	Silver	1000 ug/L
					MTICPCCV2_00019	5 mL	Silver	1000 ug/L
.MTICPCCV1_00018	05/10/18	INORGANIC VENTURES, Lot M2-MEB658053			(Purchased Reagent)		Arsenic	5000 ug/L
							Barium	20000 ug/L
							Cadmium	5000 ug/L
							Chromium	20000 ug/L
							Lead	5000 ug/L
							Selenium	5000 ug/L
.MTICPCCV1_00019	07/07/18	INORGANIC VENTURES, Lot M2-MEB658053			(Purchased Reagent)		Arsenic	5000 ug/L
							Barium	20000 ug/L
							Cadmium	5000 ug/L
							Chromium	20000 ug/L
							Lead	5000 ug/L
							Selenium	5000 ug/L
.MTICPCCV2_00018	05/10/18	INORGANIC VENTURES, Lot m2-meb658054			(Purchased Reagent)		Silver	10000 ug/L
.MTICPCCV2_00019	07/07/18	INORGANIC VENTURES, Lot M2-MEB658054			(Purchased Reagent)		Silver	10000 ug/L
MTICPICSABW_00014	10/11/17	04/11/17	DIWATER, Lot DIWATER	1000 mL	MTICPICSAB1_00006	100 mL	Al	500000 ug/L
							Arsenic	1000 ug/L
							B	500 ug/L
							Barium	500 ug/L

REAGENT TRACEABILITY SUMMARY

Lab Name: TestAmerica Canton Job No.: 240-81698-1

SDG No.:

Reagent ID	Exp Date	Prep Date	Dilutant Used	Reagent Final Volume	Parent Reagent		Analyte	Concentration
					Reagent ID	Volume Added		
							Be	500 ug/L
							Ca	500000 ug/L
							Cadmium	1000 ug/L
							Chromium	500 ug/L
							Co	500 ug/L
							Cu	500 ug/L
							Fe	200000 ug/L
							K	10000 ug/L
							Lead	1000 ug/L
							Li	500 ug/L
							Mg	500000 ug/L
							Mn	500 ug/L
							Na	10000 ug/L
							Ni	1000 ug/L
							Selenium	1000 ug/L
							Sr	1500 ug/L
							Tl	1000 ug/L
							V	500 ug/L
							Zn	1000 ug/L
					MTICPICSAB2_00006	100 mL	Mo	1000 ug/L
							Sb	1000 ug/L
							Si	10000 ug/L
							Silver	1000 ug/L
							Sn	500 ug/L
							Ti	500 ug/L
.MTICPICSAB1_00006	12/08/17	INORGANIC VENTURES, Lot K2-MEB653538			(Purchased Reagent)		Al	5000000 ug/L
							Arsenic	10000 ug/L
							B	5000 ug/L
							Barium	5000 ug/L
							Be	5000 ug/L
							Ca	5000000 ug/L
							Cadmium	10000 ug/L
							Chromium	5000 ug/L
							Co	5000 ug/L
							Cu	5000 ug/L
							Fe	2000000 ug/L
							K	100000 ug/L
							Lead	10000 ug/L
							Li	5000 ug/L
							Mg	5000000 ug/L
							Mn	5000 ug/L
							Na	100000 ug/L
							Ni	10000 ug/L
							Selenium	10000 ug/L
							Sr	15000 ug/L
							Tl	10000 ug/L
							V	5000 ug/L
							Zn	10000 ug/L

REAGENT TRACEABILITY SUMMARY

Lab Name: TestAmerica Canton Job No.: 240-81698-1

SDG No.:

Reagent ID	Exp Date	Prep Date	Dilutant Used	Reagent Final Volume	Parent Reagent		Analyte	Concentration
					Reagent ID	Volume Added		
.MTICPICSAB2_00006	12/08/17	INORGANIC VENTURES, Lot K2-MEB653539			(Purchased Reagent)		Mo	10000 ug/L
							Sb	10000 ug/L
							Si	100000 ug/L
							Silver	10000 ug/L
							Sn	5000 ug/L
							Ti	5000 ug/L
MTKMN04W_00136	06/29/19	06/29/17	DIWATER, Lot DIWATER	2.5 L	MTKMN04_00039	125 g	Potassium Permanganate	50000 mg/L
.MTKMN04_00039	05/22/22	Fisher, Lot 164080			(Purchased Reagent)		Potassium Permanganate	1 g/g
MTNONRCRA+ODD_00008	02/28/18	High-Purity Standards, Lot 1705427			(Purchased Reagent)		Al	100 ug/mL
							B	50 ug/mL
							Be	2.5 ug/mL
							Co	25 ug/mL
							Cu	12.5 ug/mL
							Fe	50 ug/mL
							Li	50 ug/mL
							Mn	25 ug/mL
							Mo	50 ug/mL
							Ni	25 ug/mL
							Sb	25 ug/mL
							Si	50 ug/mL
							Sn	100 ug/mL
							Sr	50 ug/mL
							Ti	50 ug/mL
							Tl	100 ug/mL
							V	25 ug/mL
							Zn	25 ug/mL
MTRCRA_00012	10/28/17	High Purity Standards, Lot 1630101			(Purchased Reagent)		Arsenic	500 mg/L
							Barium	5000 mg/L
							Cadmium	100 mg/L
							Chromium	500 mg/L
							Lead	500 mg/L
							Selenium	100 mg/L
							Silver	100 mg/L
MTTMHNO3_00123	06/26/19	Macron/Avantor, Lot 0000162025			(Purchased Reagent)		Nitric acid	100 %
MTTRCRIC_00048	12/05/17	06/05/17	DIWATER, Lot DIWATER	1000 mL	MTTRCRI6010C_00015	50 mL	Arsenic	15 ug/L
							Barium	200 ug/L
							Cadmium	5 ug/L
							Chromium	10 ug/L
							Lead	10 ug/L
							Selenium	20 ug/L
							Silver	10 ug/L
.MTTRCRI6010C_00015	01/17/18	Inorganic Ventures, Lot K2-MEB653408			(Purchased Reagent)		Arsenic	300 ug/L
							Barium	4000 ug/L
							Cadmium	100 ug/L
							Chromium	200 ug/L
							Lead	200 ug/L

REAGENT TRACEABILITY SUMMARY

Lab Name: TestAmerica Canton Job No.: 240-81698-1

SDG No.:

Reagent ID	Exp Date	Prep Date	Dilutant Used	Reagent Final Volume	Parent Reagent		Analyte	Concentration
					Reagent ID	Volume Added		
							Selenium	400 ug/L
							Silver	200 ug/L
MTTRICSAW_00034	09/13/17	03/13/17	DIWATER, Lot DIWATER	1000 mL	MTTRICSA_00014	100 mL	Al	500000 ug/L
							Ca	500000 ug/L
							Fe	200000 ug/L
							Mg	500000 ug/L
.MTTRICSA_00014	04/02/18	INORGANIC VENTURES, Lot J2-MEB572053			(Purchased Reagent)		Al	5000 ug/mL
							Ca	5000 ug/mL
							Fe	2000 ug/mL
							Mg	5000 ug/mL
SG1221ICV@1.0_00017	11/04/17	05/04/17	HEXANE, Lot 0000160062	10 mL	SGPCBIS STOCk_00008	0.05 mL	1-Bromo-2-nitrobenzene	0.05 ug/mL
.SGPCBIS STOCk_00008	04/24/18	04/24/17	HEXANE, Lot 0000159594	50 mL	ISTD_00004	0.5 mL	1-Bromo-2-nitrobenzene	10 ug/mL
..ISTD_00004	04/30/20	Restek, Lot A0124315			(Purchased Reagent)		1-Bromo-2-nitrobenzene	1000 ug/mL
SG1221ICV@1.0_00017	11/04/17	05/04/17	HEXANE, Lot 0000160062	10 mL	SG1221ICV@100_00005	0.1 mL	Aroclor-1221	1 ug/mL
.SG1221ICV@100_00005	03/27/18	03/27/17	HEXANE, Lot 0000132636	10 mL	SG 1221 ICV_00009	1 mL	Aroclor-1221	100 ug/mL
..SG 1221 ICV_00009	06/30/19	restek, Lot a094157			(Purchased Reagent)		Aroclor-1221	1000 ug/mL
SG1232ICV@1.0_00019	11/04/17	05/04/17	HEXANE, Lot 0000160062	10 mL	SGPCBIS STOCk_00008	0.05 mL	1-Bromo-2-nitrobenzene	0.05 ug/mL
.SGPCBIS STOCk_00008	04/24/18	04/24/17	HEXANE, Lot 0000159594	50 mL	ISTD_00004	0.5 mL	1-Bromo-2-nitrobenzene	10 ug/mL
..ISTD_00004	04/30/20	Restek, Lot A0124315			(Purchased Reagent)		1-Bromo-2-nitrobenzene	1000 ug/mL
SG1232ICV@1.0_00019	11/04/17	05/04/17	HEXANE, Lot 0000160062	10 mL	SG1232ICV@100_00005	0.1 mL	Aroclor-1232	1 ug/mL
.SG1232ICV@100_00005	11/21/17	11/21/16	HEXANE, Lot 0000146278	10 mL	SG 1232 ICV_00009	1 mL	Aroclor-1232	100 ug/mL
..SG 1232 ICV_00009	01/31/19	ULTRA SCIENTIFIC, Lot CG-4471			(Purchased Reagent)		Aroclor-1232	1000 ug/mL
SG1242ICV@1.0_00018	11/04/17	05/04/17	HEXANE, Lot 0000160062	10 mL	SGPCBIS STOCk_00008	0.05 mL	1-Bromo-2-nitrobenzene	0.05 ug/mL
.SGPCBIS STOCk_00008	04/24/18	04/24/17	HEXANE, Lot 0000159594	50 mL	ISTD_00004	0.5 mL	1-Bromo-2-nitrobenzene	10 ug/mL
..ISTD_00004	04/30/20	Restek, Lot A0124315			(Purchased Reagent)		1-Bromo-2-nitrobenzene	1000 ug/mL
SG1242ICV@1.0_00018	11/04/17	05/04/17	HEXANE, Lot 0000160062	10 mL	SG1242ICV@100_00004	0.1 mL	Aroclor-1242	1 ug/mL
.SG1242ICV@100_00004	11/21/17	11/21/16	HEXANE, Lot 0000146278	10 mL	SG 1242 ICV_00008	1 mL	Aroclor-1242	100 ug/mL
..SG 1242 ICV_00008	01/31/20	ULTRA SCIENTIFIC, Lot CH-4123			(Purchased Reagent)		Aroclor-1242	1000 ug/mL
SG1248@.05ppm_00022	11/02/17	05/02/17	HEXANE, Lot 0000160062	50 mL	SG1248@10ppm_00010	0.25 mL	PCB-1248 Peak 1	0.05 ug/mL
							PCB-1248 Peak 2	0.05 ug/mL
							PCB-1248 Peak 3	0.05 ug/mL
							PCB-1248 Peak 4	0.05 ug/mL
							PCB-1248 Peak 5	0.05 ug/mL
					SGPCBIS STOCk_00008	0.25 mL	1-Bromo-2-nitrobenzene	0.05 ug/mL
.SG1248@10ppm_00010	11/29/17	11/29/16	Hexane, Lot 0000146278	100 mL	SG1248_00007	1 mL	PCB-1248 Peak 1	10 ug/mL
							PCB-1248 Peak 2	10 ug/mL
							PCB-1248 Peak 3	10 ug/mL
							PCB-1248 Peak 4	10 ug/mL
							PCB-1248 Peak 5	10 ug/mL
..SG1248_00007	02/28/21	Restek, Lot A0110957			(Purchased Reagent)		PCB-1248 Peak 1	1000 ug/mL
							PCB-1248 Peak 2	1000 ug/mL
							PCB-1248 Peak 3	1000 ug/mL
							PCB-1248 Peak 4	1000 ug/mL
							PCB-1248 Peak 5	1000 ug/mL
.SGPCBIS STOCk_00008	04/24/18	04/24/17	HEXANE, Lot 0000159594	50 mL	ISTD_00004	0.5 mL	1-Bromo-2-nitrobenzene	10 ug/mL
..ISTD_00004	04/30/20	Restek, Lot A0124315			(Purchased Reagent)		1-Bromo-2-nitrobenzene	1000 ug/mL

REAGENT TRACEABILITY SUMMARY

Lab Name: TestAmerica Canton Job No.: 240-81698-1

SDG No.:

Reagent ID	Exp Date	Prep Date	Dilutant Used	Reagent Final Volume	Parent Reagent		Analyte	Concentration
					Reagent ID	Volume Added		
SG1248@0.1PPM_00024	11/02/17	05/02/17	HEXANE, Lot 0000160062	50 mL	SG1248@10ppm_00010	0.5 mL	PCB-1248 Peak 1	0.1 ug/mL
							PCB-1248 Peak 2	0.1 ug/mL
							PCB-1248 Peak 3	0.1 ug/mL
							PCB-1248 Peak 4	0.1 ug/mL
							PCB-1248 Peak 5	0.1 ug/mL
					SGPCBIS STOCk_00008	0.25 mL	1-Bromo-2-nitrobenzene	0.05 ug/mL
.SG1248@10ppm_00010	11/29/17	11/29/16	Hexane, Lot 0000146278	100 mL	SG1248_00007	1 mL	PCB-1248 Peak 1	10 ug/mL
							PCB-1248 Peak 2	10 ug/mL
							PCB-1248 Peak 3	10 ug/mL
							PCB-1248 Peak 4	10 ug/mL
							PCB-1248 Peak 5	10 ug/mL
..SG1248_00007	02/28/21		Restek, Lot A0110957		(Purchased Reagent)		PCB-1248 Peak 1	1000 ug/mL
							PCB-1248 Peak 2	1000 ug/mL
							PCB-1248 Peak 3	1000 ug/mL
							PCB-1248 Peak 4	1000 ug/mL
							PCB-1248 Peak 5	1000 ug/mL
.SGPCBIS STOCk_00008	04/24/18	04/24/17	HEXANE, Lot 0000159594	50 mL	ISTD_00004	0.5 mL	1-Bromo-2-nitrobenzene	10 ug/mL
..ISTD_00004	04/30/20		Restek, Lot A0124315		(Purchased Reagent)		1-Bromo-2-nitrobenzene	1000 ug/mL
SG1248@0.2ppm_00020	11/02/17	05/02/17	HEXANE, Lot 0000160062	50 mL	SG1248@10ppm_00010	1 mL	PCB-1248 Peak 1	0.2 ug/mL
							PCB-1248 Peak 2	0.2 ug/mL
							PCB-1248 Peak 3	0.2 ug/mL
							PCB-1248 Peak 4	0.2 ug/mL
							PCB-1248 Peak 5	0.2 ug/mL
					SGPCBIS STOCk_00008	0.25 mL	1-Bromo-2-nitrobenzene	0.05 ug/mL
.SG1248@10ppm_00010	11/29/17	11/29/16	Hexane, Lot 0000146278	100 mL	SG1248_00007	1 mL	PCB-1248 Peak 1	10 ug/mL
							PCB-1248 Peak 2	10 ug/mL
							PCB-1248 Peak 3	10 ug/mL
							PCB-1248 Peak 4	10 ug/mL
							PCB-1248 Peak 5	10 ug/mL
..SG1248_00007	02/28/21		Restek, Lot A0110957		(Purchased Reagent)		PCB-1248 Peak 1	1000 ug/mL
							PCB-1248 Peak 2	1000 ug/mL
							PCB-1248 Peak 3	1000 ug/mL
							PCB-1248 Peak 4	1000 ug/mL
							PCB-1248 Peak 5	1000 ug/mL
.SGPCBIS STOCk_00008	04/24/18	04/24/17	HEXANE, Lot 0000159594	50 mL	ISTD_00004	0.5 mL	1-Bromo-2-nitrobenzene	10 ug/mL
..ISTD_00004	04/30/20		Restek, Lot A0124315		(Purchased Reagent)		1-Bromo-2-nitrobenzene	1000 ug/mL
SG1248@0.5ppm_00028	06/17/17	04/17/17	HEXANE, Lot 0000132636	100 mL	SG1248@10ppm_00010	5 mL	PCB-1248 Peak 1	0.5 ug/mL
							PCB-1248 Peak 2	0.5 ug/mL
							PCB-1248 Peak 3	0.5 ug/mL
							PCB-1248 Peak 4	0.5 ug/mL
							PCB-1248 Peak 5	0.5 ug/mL
					SGPCBIS STOCk_00007	0.5 mL	1-Bromo-2-nitrobenzene	0.05 ug/mL
.SG1248@10ppm_00010	11/29/17	11/29/16	Hexane, Lot 0000146278	100 mL	SG1248_00007	1 mL	PCB-1248 Peak 1	10 ug/mL
							PCB-1248 Peak 2	10 ug/mL
							PCB-1248 Peak 3	10 ug/mL
							PCB-1248 Peak 4	10 ug/mL
							PCB-1248 Peak 5	10 ug/mL

REAGENT TRACEABILITY SUMMARY

Lab Name: TestAmerica Canton Job No.: 240-81698-1

SDG No.:

Reagent ID	Exp Date	Prep Date	Dilutant Used	Reagent Final Volume	Parent Reagent		Analyte	Concentration
					Reagent ID	Volume Added		
..SG1248_00007	02/28/21		Restek, Lot A0110957		(Purchased Reagent)		PCB-1248 Peak 1	1000 ug/mL
							PCB-1248 Peak 2	1000 ug/mL
							PCB-1248 Peak 3	1000 ug/mL
							PCB-1248 Peak 4	1000 ug/mL
							PCB-1248 Peak 5	1000 ug/mL
.SGPCBIS STOCk_00007	06/17/17	06/17/16	HEXANE, Lot 0000135581	50 mL	ISTD_00003	0.5 mL	1-Bromo-2-nitrobenzene	10 ug/mL
..ISTD_00003	11/30/18		Restek, Lot A0113173		(Purchased Reagent)		1-Bromo-2-nitrobenzene	1000 ug/mL
SG1248@0.5ppm_00029	11/02/17	05/02/17	HEXANE, Lot 0000160062	100 mL	SG1248@10ppm_00010	5 mL	PCB-1248 Peak 1	0.5 ug/mL
							PCB-1248 Peak 2	0.5 ug/mL
							PCB-1248 Peak 3	0.5 ug/mL
							PCB-1248 Peak 4	0.5 ug/mL
							PCB-1248 Peak 5	0.5 ug/mL
					SGPCBIS STOCk_00008	0.5 mL	1-Bromo-2-nitrobenzene	0.05 ug/mL
.SG1248@10ppm_00010	11/29/17	11/29/16	Hexane, Lot 0000146278	100 mL	SG1248_00007	1 mL	PCB-1248 Peak 1	10 ug/mL
							PCB-1248 Peak 2	10 ug/mL
							PCB-1248 Peak 3	10 ug/mL
							PCB-1248 Peak 4	10 ug/mL
							PCB-1248 Peak 5	10 ug/mL
..SG1248_00007	02/28/21		Restek, Lot A0110957		(Purchased Reagent)		PCB-1248 Peak 1	1000 ug/mL
							PCB-1248 Peak 2	1000 ug/mL
							PCB-1248 Peak 3	1000 ug/mL
							PCB-1248 Peak 4	1000 ug/mL
							PCB-1248 Peak 5	1000 ug/mL
.SGPCBIS STOCk_00008	04/24/18	04/24/17	HEXANE, Lot 0000159594	50 mL	ISTD_00004	0.5 mL	1-Bromo-2-nitrobenzene	10 ug/mL
..ISTD_00004	04/30/20		Restek, Lot A0124315		(Purchased Reagent)		1-Bromo-2-nitrobenzene	1000 ug/mL
SG1248@0.5ppm_00029	11/02/17	05/02/17	HEXANE, Lot 0000160062	100 mL	SG1248@10ppm_00010	5 mL	Aroclor-1248	0.5 ug/mL
.SG1248@10ppm_00010	11/29/17	11/29/16	Hexane, Lot 0000146278	100 mL	SG1248_00007	1 mL	Aroclor-1248	10 ug/mL
..SG1248_00007	02/28/21		Restek, Lot A0110957		(Purchased Reagent)		Aroclor-1248	1000 ug/mL
SG1248@1.0ppm_00020	11/02/17	05/02/17	HEXANE, Lot 0000160062	50 mL	SG1248@10ppm_00010	5 mL	PCB-1248 Peak 1	1 ug/mL
							PCB-1248 Peak 2	1 ug/mL
							PCB-1248 Peak 3	1 ug/mL
							PCB-1248 Peak 4	1 ug/mL
							PCB-1248 Peak 5	1 ug/mL
					SGPCBIS STOCk_00008	0.25 mL	1-Bromo-2-nitrobenzene	0.05 ug/mL
.SG1248@10ppm_00010	11/29/17	11/29/16	Hexane, Lot 0000146278	100 mL	SG1248_00007	1 mL	PCB-1248 Peak 1	10 ug/mL
							PCB-1248 Peak 2	10 ug/mL
							PCB-1248 Peak 3	10 ug/mL
							PCB-1248 Peak 4	10 ug/mL
							PCB-1248 Peak 5	10 ug/mL
..SG1248_00007	02/28/21		Restek, Lot A0110957		(Purchased Reagent)		PCB-1248 Peak 1	1000 ug/mL
							PCB-1248 Peak 2	1000 ug/mL
							PCB-1248 Peak 3	1000 ug/mL
							PCB-1248 Peak 4	1000 ug/mL
							PCB-1248 Peak 5	1000 ug/mL
.SGPCBIS STOCk_00008	04/24/18	04/24/17	HEXANE, Lot 0000159594	50 mL	ISTD_00004	0.5 mL	1-Bromo-2-nitrobenzene	10 ug/mL
..ISTD_00004	04/30/20		Restek, Lot A0124315		(Purchased Reagent)		1-Bromo-2-nitrobenzene	1000 ug/mL
SG1248@1.5ppm_00001	11/02/17	05/02/17	HEXANE, Lot 0000160062	50 mL	SG1248@10ppm_00010	7.5 mL	PCB-1248 Peak 1	1.5 ug/mL

REAGENT TRACEABILITY SUMMARY

Lab Name: TestAmerica Canton Job No.: 240-81698-1

SDG No.:

Reagent ID	Exp Date	Prep Date	Dilutant Used	Reagent Final Volume	Parent Reagent		Analyte	Concentration
					Reagent ID	Volume Added		
							PCB-1248 Peak 2	1.5 ug/mL
							PCB-1248 Peak 3	1.5 ug/mL
							PCB-1248 Peak 4	1.5 ug/mL
							PCB-1248 Peak 5	1.5 ug/mL
					SGPCBIS STOCk_00008	0.25 mL	1-Bromo-2-nitrobenzene	0.05 ug/mL
.SG1248@10ppm_00010	11/29/17	11/29/16	Hexane, Lot 0000146278	100 mL	SG1248_00007	1 mL	PCB-1248 Peak 1	10 ug/mL
							PCB-1248 Peak 2	10 ug/mL
							PCB-1248 Peak 3	10 ug/mL
							PCB-1248 Peak 4	10 ug/mL
							PCB-1248 Peak 5	10 ug/mL
..SG1248_00007	02/28/21		Restek, Lot A0110957		(Purchased Reagent)		PCB-1248 Peak 1	1000 ug/mL
							PCB-1248 Peak 2	1000 ug/mL
							PCB-1248 Peak 3	1000 ug/mL
							PCB-1248 Peak 4	1000 ug/mL
							PCB-1248 Peak 5	1000 ug/mL
.SGPCBIS STOCk_00008	04/24/18	04/24/17	HEXANE, Lot 0000159594	50 mL	ISTD_00004	0.5 mL	1-Bromo-2-nitrobenzene	10 ug/mL
..ISTD_00004	04/30/20		Restek, Lot A0124315		(Purchased Reagent)		1-Bromo-2-nitrobenzene	1000 ug/mL
SG1248ICV@1.0_00018	09/15/17	05/04/17	HEXANE, Lot 0000160062	10 mL	SGPCBIS STOCk_00008	0.05 mL	1-Bromo-2-nitrobenzene	0.05 ug/mL
.SGPCBIS STOCk_00008	04/24/18	04/24/17	HEXANE, Lot 0000159594	50 mL	ISTD_00004	0.5 mL	1-Bromo-2-nitrobenzene	10 ug/mL
..ISTD_00004	04/30/20		Restek, Lot A0124315		(Purchased Reagent)		1-Bromo-2-nitrobenzene	1000 ug/mL
SG1248ICV@1.0_00018	09/15/17	05/04/17	HEXANE, Lot 0000160062	10 mL	SG1248ICV@100_00004	0.1 mL	Aroclor-1248	1 ug/mL
.SG1248ICV@100_00004	09/15/17	09/15/16	HEXANE, Lot 0000140376	10 mL	SG 1248 ICV_00008	1 mL	Aroclor-1248	100 ug/mL
..SG 1248 ICV_00008	02/28/21		restek, Lot a0107321		(Purchased Reagent)		Aroclor-1248	1000 ug/mL
SG1254ICV@1.0_00018	09/23/17	05/04/17	HEXANE, Lot 0000160062	10 mL	SGPCBIS STOCk_00008	0.05 mL	1-Bromo-2-nitrobenzene	0.05 ug/mL
.SGPCBIS STOCk_00008	04/24/18	04/24/17	HEXANE, Lot 0000159594	50 mL	ISTD_00004	0.5 mL	1-Bromo-2-nitrobenzene	10 ug/mL
..ISTD_00004	04/30/20		Restek, Lot A0124315		(Purchased Reagent)		1-Bromo-2-nitrobenzene	1000 ug/mL
SG1254ICV@1.0_00018	09/23/17	05/04/17	HEXANE, Lot 0000160062	10 mL	SG1254ICV@100_00005	0.1 mL	Aroclor-1254	1 ug/mL
.SG1254ICV@100_00005	09/23/17	09/23/16	HEXANE, Lot 000040376	10 mL	SGPCB1254_00009	1 mL	Aroclor-1254	100 ug/mL
..SGPCB1254_00009	10/31/21		ULTRA SCIENTIFIC, Lot CK-3221		(Purchased Reagent)		Aroclor-1254	1000 ug/mL
SG1262ICV@1.0_00020	10/06/17	05/03/17	HEXANE, Lot 0000160062	10 mL	SGPCBIS STOCk_00008	0.05 mL	1-Bromo-2-nitrobenzene	0.05 ug/mL
.SGPCBIS STOCk_00008	04/24/18	04/24/17	HEXANE, Lot 0000159594	50 mL	ISTD_00004	0.5 mL	1-Bromo-2-nitrobenzene	10 ug/mL
..ISTD_00004	04/30/20		Restek, Lot A0124315		(Purchased Reagent)		1-Bromo-2-nitrobenzene	1000 ug/mL
SG1268ICV_00027	09/07/17	05/03/17	HEXANE, Lot 0000160062	10 mL	SGPCBIS STOCk_00008	0.05 mL	1-Bromo-2-nitrobenzene	0.05 ug/mL
.SGPCBIS STOCk_00008	04/24/18	04/24/17	HEXANE, Lot 0000159594	50 mL	ISTD_00004	0.5 mL	1-Bromo-2-nitrobenzene	10 ug/mL
..ISTD_00004	04/30/20		Restek, Lot A0124315		(Purchased Reagent)		1-Bromo-2-nitrobenzene	1000 ug/mL
SG1660@.05PPM_00020	11/03/17	05/03/17	HEXANE, Lot 0000160062	100 mL	SG1016/1260_00022	0.5 mL	PCB-1016 Peak 1	0.05 ug/mL
							PCB-1016 Peak 2	0.05 ug/mL
							PCB-1016 Peak 3	0.05 ug/mL
							PCB-1016 Peak 4	0.05 ug/mL
							PCB-1016 Peak 5	0.05 ug/mL
							PCB-1260 Peak 1	0.05 ug/mL
							PCB-1260 Peak 2	0.05 ug/mL
							PCB-1260 Peak 3	0.05 ug/mL
							PCB-1260 Peak 4	0.05 ug/mL
							PCB-1260 Peak 5	0.05 ug/mL
					SGPCBIS STOCk_00008	0.5 mL	1-Bromo-2-nitrobenzene	0.05 ug/mL

REAGENT TRACEABILITY SUMMARY

Lab Name: TestAmerica Canton Job No.: 240-81698-1

SDG No.:

Reagent ID	Exp Date	Prep Date	Dilutant Used	Reagent Final Volume	Parent Reagent		Analyte	Concentration
					Reagent ID	Volume Added		
					SGPCGSURRSTK_00008	0.125 mL	DCB Decachlorobiphenyl	0.0025 ug/mL
							Tetrachloro-m-xylene	0.0025 ug/mL
.SG1016/1260_00022	04/24/18	04/24/17	HEXANE, Lot 0000159594	100 mL	SG1016/1260MX_00011	1 mL	PCB-1016 Peak 1	10 ug/mL
							PCB-1016 Peak 2	10 ug/mL
							PCB-1016 Peak 3	10 ug/mL
							PCB-1016 Peak 4	10 ug/mL
							PCB-1016 Peak 5	10 ug/mL
							PCB-1260 Peak 1	10 ug/mL
							PCB-1260 Peak 2	10 ug/mL
							PCB-1260 Peak 3	10 ug/mL
							PCB-1260 Peak 4	10 ug/mL
							PCB-1260 Peak 5	10 ug/mL
..SG1016/1260MX_00011	06/30/21	Restek, Lot A0109664			(Purchased Reagent)		PCB-1016 Peak 1	1000 ug/mL
							PCB-1016 Peak 2	1000 ug/mL
							PCB-1016 Peak 3	1000 ug/mL
							PCB-1016 Peak 4	1000 ug/mL
							PCB-1016 Peak 5	1000 ug/mL
							PCB-1260 Peak 1	1000 ug/mL
							PCB-1260 Peak 2	1000 ug/mL
							PCB-1260 Peak 3	1000 ug/mL
							PCB-1260 Peak 4	1000 ug/mL
							PCB-1260 Peak 5	1000 ug/mL
.SGPCBIS STOCk_00008	04/24/18	04/24/17	HEXANE, Lot 0000159594	50 mL	ISTD_00004	0.5 mL	1-Bromo-2-nitrobenzene	10 ug/mL
..ISTD_00004	04/30/20	Restek, Lot A0124315			(Purchased Reagent)		1-Bromo-2-nitrobenzene	1000 ug/mL
.SGPCGSURRSTK_00008	12/08/17	12/08/16	HEXANE, Lot 0000132636	100 mL	SGPESTSURR_00010	1 mL	DCB Decachlorobiphenyl	2 ug/mL
							Tetrachloro-m-xylene	2 ug/mL
..SGPESTSURR_00010	06/22/22	Restek, Lot A0117947			(Purchased Reagent)		DCB Decachlorobiphenyl	200 ug/mL
							Tetrachloro-m-xylene	200 ug/mL
SG1660@0.2ppm_00022	11/03/17	05/03/17	HEXANE, Lot 00000160062	50 mL	SG1016/1260_00022	1 mL	PCB-1016 Peak 1	0.2 ug/mL
							PCB-1016 Peak 2	0.2 ug/mL
							PCB-1016 Peak 3	0.2 ug/mL
							PCB-1016 Peak 4	0.2 ug/mL
							PCB-1016 Peak 5	0.2 ug/mL
							PCB-1260 Peak 1	0.2 ug/mL
							PCB-1260 Peak 2	0.2 ug/mL
							PCB-1260 Peak 3	0.2 ug/mL
							PCB-1260 Peak 4	0.2 ug/mL
							PCB-1260 Peak 5	0.2 ug/mL
					SGPCBIS STOCk_00008	0.25 mL	1-Bromo-2-nitrobenzene	0.05 ug/mL
					SGPCGSURRSTK_00008	0.25 mL	DCB Decachlorobiphenyl	0.01 ug/mL
							Tetrachloro-m-xylene	0.01 ug/mL
.SG1016/1260_00022	04/24/18	04/24/17	HEXANE, Lot 0000159594	100 mL	SG1016/1260MX_00011	1 mL	PCB-1016 Peak 1	10 ug/mL
							PCB-1016 Peak 2	10 ug/mL
							PCB-1016 Peak 3	10 ug/mL
							PCB-1016 Peak 4	10 ug/mL
							PCB-1016 Peak 5	10 ug/mL
							PCB-1260 Peak 1	10 ug/mL

REAGENT TRACEABILITY SUMMARY

Lab Name: TestAmerica Canton Job No.: 240-81698-1

SDG No.:

Reagent ID	Exp Date	Prep Date	Dilutant Used	Reagent Final Volume	Parent Reagent		Analyte	Concentration
					Reagent ID	Volume Added		
							PCB-1260 Peak 2	10 ug/mL
							PCB-1260 Peak 3	10 ug/mL
							PCB-1260 Peak 4	10 ug/mL
							PCB-1260 Peak 5	10 ug/mL
..SG1016/1260MX_00011	06/30/21		Restek, Lot A0109664		(Purchased Reagent)		PCB-1016 Peak 1	1000 ug/mL
							PCB-1016 Peak 2	1000 ug/mL
							PCB-1016 Peak 3	1000 ug/mL
							PCB-1016 Peak 4	1000 ug/mL
							PCB-1016 Peak 5	1000 ug/mL
							PCB-1260 Peak 1	1000 ug/mL
							PCB-1260 Peak 2	1000 ug/mL
							PCB-1260 Peak 3	1000 ug/mL
							PCB-1260 Peak 4	1000 ug/mL
							PCB-1260 Peak 5	1000 ug/mL
.SGPCBIS STOCk_00008	04/24/18	04/24/17	HEXANE, Lot 0000159594	50 mL	ISTD_00004	0.5 mL	1-Bromo-2-nitrobenzene	10 ug/mL
..ISTD_00004	04/30/20		Restek, Lot A0124315		(Purchased Reagent)		1-Bromo-2-nitrobenzene	1000 ug/mL
.SGPCGSURRSTK_00008	12/08/17	12/08/16	HEXANE, Lot 0000132636	100 mL	SGPESTSURR_00010	1 mL	DCB Decachlorobiphenyl	2 ug/mL
							Tetrachloro-m-xylene	2 ug/mL
..SGPESTSURR_00010	06/22/22		Restek, Lot A0117947		(Purchased Reagent)		DCB Decachlorobiphenyl	200 ug/mL
							Tetrachloro-m-xylene	200 ug/mL
SG1660@0.5PPM_00072	11/03/17	05/03/17	HEXANE, Lot 0000160062	100 mL	SG1016/1260_00022	5 mL	PCB-1016 Peak 1	0.5 ug/mL
							PCB-1016 Peak 2	0.5 ug/mL
							PCB-1016 Peak 3	0.5 ug/mL
							PCB-1016 Peak 4	0.5 ug/mL
							PCB-1016 Peak 5	0.5 ug/mL
							PCB-1260 Peak 1	0.5 ug/mL
							PCB-1260 Peak 2	0.5 ug/mL
							PCB-1260 Peak 3	0.5 ug/mL
							PCB-1260 Peak 4	0.5 ug/mL
							PCB-1260 Peak 5	0.5 ug/mL
					SGPCBIS STOCk_00008	0.5 mL	1-Bromo-2-nitrobenzene	0.05 ug/mL
					SGPCGSURRSTK_00008	1.25 mL	DCB Decachlorobiphenyl	0.025 ug/mL
							Tetrachloro-m-xylene	0.025 ug/mL
.SG1016/1260_00022	04/24/18	04/24/17	HEXANE, Lot 0000159594	100 mL	SG1016/1260MX_00011	1 mL	PCB-1016 Peak 1	10 ug/mL
							PCB-1016 Peak 2	10 ug/mL
							PCB-1016 Peak 3	10 ug/mL
							PCB-1016 Peak 4	10 ug/mL
							PCB-1016 Peak 5	10 ug/mL
							PCB-1260 Peak 1	10 ug/mL
							PCB-1260 Peak 2	10 ug/mL
							PCB-1260 Peak 3	10 ug/mL
							PCB-1260 Peak 4	10 ug/mL
							PCB-1260 Peak 5	10 ug/mL
..SG1016/1260MX_00011	06/30/21		Restek, Lot A0109664		(Purchased Reagent)		PCB-1016 Peak 1	1000 ug/mL
							PCB-1016 Peak 2	1000 ug/mL
							PCB-1016 Peak 3	1000 ug/mL
							PCB-1016 Peak 4	1000 ug/mL

REAGENT TRACEABILITY SUMMARY

Lab Name: TestAmerica Canton Job No.: 240-81698-1

SDG No.:

Reagent ID	Exp Date	Prep Date	Dilutant Used	Reagent Final Volume	Parent Reagent		Analyte	Concentration
					Reagent ID	Volume Added		
							PCB-1016 Peak 5	1000 ug/mL
							PCB-1260 Peak 1	1000 ug/mL
							PCB-1260 Peak 2	1000 ug/mL
							PCB-1260 Peak 3	1000 ug/mL
							PCB-1260 Peak 4	1000 ug/mL
							PCB-1260 Peak 5	1000 ug/mL
.SGPCBIS STOCk_00008	04/24/18	04/24/17	HEXANE, Lot 0000159594	50 mL	ISTD_00004	0.5 mL	1-Bromo-2-nitrobenzene	10 ug/mL
..ISTD_00004	04/30/20		Restek, Lot A0124315		(Purchased Reagent)		1-Bromo-2-nitrobenzene	1000 ug/mL
.SGPCGSURRSTK_00008	12/08/17	12/08/16	HEXANE, Lot 0000132636	100 mL	SGPESTSURR_00010	1 mL	DCB Decachlorobiphenyl	2 ug/mL
							Tetrachloro-m-xylene	2 ug/mL
..SGPESTSURR_00010	06/22/22		Restek, Lot A0117947		(Purchased Reagent)		DCB Decachlorobiphenyl	200 ug/mL
							Tetrachloro-m-xylene	200 ug/mL
SG1660@0.5PPM_00073	11/30/17	05/31/17	HEXANE, Lot 0000160062	100 mL	SGPCBIS STOCk_00008	0.5 mL	1-Bromo-2-nitrobenzene	0.05 ug/mL
.SGPCBIS STOCk_00008	04/24/18	04/24/17	HEXANE, Lot 0000159594	50 mL	ISTD_00004	0.5 mL	1-Bromo-2-nitrobenzene	10 ug/mL
..ISTD_00004	04/30/20		Restek, Lot A0124315		(Purchased Reagent)		1-Bromo-2-nitrobenzene	1000 ug/mL
SG1660@0.5PPM_00073	11/30/17	05/31/17	HEXANE, Lot 0000160062	100 mL	SG1016/1260_00022	5 mL	1260 Res 1	0.5 ug/mL
							1260 Res 2	0.5 ug/mL
							1260 Res 3	0.5 ug/mL
							Aroclor-1016	0.5 ug/mL
							Aroclor-1260	0.5 ug/mL
							PCB-1016 Peak 1	0.5 ug/mL
							PCB-1016 Peak 2	0.5 ug/mL
							PCB-1016 Peak 3	0.5 ug/mL
							PCB-1016 Peak 4	0.5 ug/mL
							PCB-1016 Peak 5	0.5 ug/mL
							PCB-1260 Peak 1	0.5 ug/mL
							PCB-1260 Peak 2	0.5 ug/mL
							PCB-1260 Peak 3	0.5 ug/mL
							PCB-1260 Peak 4	0.5 ug/mL
							PCB-1260 Peak 5	0.5 ug/mL
					SGPCGSURRSTK_00008	1.25 mL	DCB Decachlorobiphenyl	0.025 ug/mL
							Tetrachloro-m-xylene	0.025 ug/mL
.SG1016/1260_00022	04/24/18	04/24/17	HEXANE, Lot 0000159594	100 mL	SG1016/1260MX_00011	1 mL	1260 Res 1	10 ug/mL
							1260 Res 2	10 ug/mL
							1260 Res 3	10 ug/mL
							Aroclor-1016	10 ug/mL
							Aroclor-1260	10 ug/mL
							PCB-1016 Peak 1	10 ug/mL
							PCB-1016 Peak 2	10 ug/mL
							PCB-1016 Peak 3	10 ug/mL
							PCB-1016 Peak 4	10 ug/mL
							PCB-1016 Peak 5	10 ug/mL
							PCB-1260 Peak 1	10 ug/mL
							PCB-1260 Peak 2	10 ug/mL
							PCB-1260 Peak 3	10 ug/mL
							PCB-1260 Peak 4	10 ug/mL
							PCB-1260 Peak 5	10 ug/mL

REAGENT TRACEABILITY SUMMARY

Lab Name: TestAmerica Canton Job No.: 240-81698-1

SDG No.:

Reagent ID	Exp Date	Prep Date	Dilutant Used	Reagent Final Volume	Parent Reagent		Analyte	Concentration
					Reagent ID	Volume Added		
..SG1016/1260MX_00011	06/30/21		Restek, Lot A0109664		(Purchased Reagent)		1260 Res 1	1000 ug/mL
							1260 Res 2	1000 ug/mL
							1260 Res 3	1000 ug/mL
							Aroclor-1016	1000 ug/mL
							Aroclor-1260	1000 ug/mL
							PCB-1016 Peak 1	1000 ug/mL
							PCB-1016 Peak 2	1000 ug/mL
							PCB-1016 Peak 3	1000 ug/mL
							PCB-1016 Peak 4	1000 ug/mL
							PCB-1016 Peak 5	1000 ug/mL
							PCB-1260 Peak 1	1000 ug/mL
							PCB-1260 Peak 2	1000 ug/mL
							PCB-1260 Peak 3	1000 ug/mL
							PCB-1260 Peak 4	1000 ug/mL
							PCB-1260 Peak 5	1000 ug/mL
.SGPCGSURRSTK_00008	12/08/17	12/08/16	HEXANE, Lot 0000132636	100 mL	SGPESTSURR_00010	1 mL	DCB Decachlorobiphenyl	2 ug/mL
							Tetrachloro-m-xylene	2 ug/mL
..SGPESTSURR_00010	06/22/22		Restek, Lot A0117947		(Purchased Reagent)		DCB Decachlorobiphenyl	200 ug/mL
							Tetrachloro-m-xylene	200 ug/mL
SG1660@1.0PPM_00023	11/03/17	05/03/17	HEXANE, Lot 0000160062	50 mL	SG1016/1260_00022	5 mL	PCB-1016 Peak 1	1 ug/mL
							PCB-1016 Peak 2	1 ug/mL
							PCB-1016 Peak 3	1 ug/mL
							PCB-1016 Peak 4	1 ug/mL
							PCB-1016 Peak 5	1 ug/mL
							PCB-1260 Peak 1	1 ug/mL
							PCB-1260 Peak 2	1 ug/mL
							PCB-1260 Peak 3	1 ug/mL
							PCB-1260 Peak 4	1 ug/mL
							PCB-1260 Peak 5	1 ug/mL
					SGPCBIS STOCk_00008	0.25 mL	1-Bromo-2-nitrobenzene	0.05 ug/mL
					SGPCGSURRSTK_00008	1.25 mL	DCB Decachlorobiphenyl	0.05 ug/mL
							Tetrachloro-m-xylene	0.05 ug/mL
.SG1016/1260_00022	04/24/18	04/24/17	HEXANE, Lot 0000159594	100 mL	SG1016/1260MX_00011	1 mL	PCB-1016 Peak 1	10 ug/mL
							PCB-1016 Peak 2	10 ug/mL
							PCB-1016 Peak 3	10 ug/mL
							PCB-1016 Peak 4	10 ug/mL
							PCB-1016 Peak 5	10 ug/mL
							PCB-1260 Peak 1	10 ug/mL
							PCB-1260 Peak 2	10 ug/mL
							PCB-1260 Peak 3	10 ug/mL
							PCB-1260 Peak 4	10 ug/mL
							PCB-1260 Peak 5	10 ug/mL
..SG1016/1260MX_00011	06/30/21		Restek, Lot A0109664		(Purchased Reagent)		PCB-1016 Peak 1	1000 ug/mL
							PCB-1016 Peak 2	1000 ug/mL
							PCB-1016 Peak 3	1000 ug/mL
							PCB-1016 Peak 4	1000 ug/mL
							PCB-1016 Peak 5	1000 ug/mL

REAGENT TRACEABILITY SUMMARY

Lab Name: TestAmerica Canton Job No.: 240-81698-1

SDG No.:

Reagent ID	Exp Date	Prep Date	Dilutant Used	Reagent Final Volume	Parent Reagent		Analyte	Concentration
					Reagent ID	Volume Added		
							PCB-1260 Peak 1	1000 ug/mL
							PCB-1260 Peak 2	1000 ug/mL
							PCB-1260 Peak 3	1000 ug/mL
							PCB-1260 Peak 4	1000 ug/mL
							PCB-1260 Peak 5	1000 ug/mL
.SGPCBIS STOCk_00008	04/24/18	04/24/17	HEXANE, Lot 0000159594	50 mL	ISTD_00004	0.5 mL	1-Bromo-2-nitrobenzene	10 ug/mL
..ISTD_00004	04/30/20		Restek, Lot A0124315		(Purchased Reagent)		1-Bromo-2-nitrobenzene	1000 ug/mL
.SGPCGSURRSTK_00008	12/08/17	12/08/16	HEXANE, Lot 0000132636	100 mL	SGPESTSURR_00010	1 mL	DCB Decachlorobiphenyl	2 ug/mL
							Tetrachloro-m-xylene	2 ug/mL
..SGPESTSURR_00010	06/22/22		Restek, Lot A0117947		(Purchased Reagent)		DCB Decachlorobiphenyl	200 ug/mL
							Tetrachloro-m-xylene	200 ug/mL
SG1660@1.5PPM_00001	11/03/17	05/03/17	HEXANE, Lot 0000160062	50 mL	SG1016/1260_00022	7.5 mL	PCB-1016 Peak 1	1.5 ug/mL
							PCB-1016 Peak 2	1.5 ug/mL
							PCB-1016 Peak 3	1.5 ug/mL
							PCB-1016 Peak 4	1.5 ug/mL
							PCB-1016 Peak 5	1.5 ug/mL
							PCB-1260 Peak 1	1.5 ug/mL
							PCB-1260 Peak 2	1.5 ug/mL
							PCB-1260 Peak 3	1.5 ug/mL
							PCB-1260 Peak 4	1.5 ug/mL
							PCB-1260 Peak 5	1.5 ug/mL
					SGPCBIS STOCk_00008	0.25 mL	1-Bromo-2-nitrobenzene	0.05 ug/mL
					SGPCGSURRSTK_00008	2.5 mL	DCB Decachlorobiphenyl	0.1 ug/mL
							Tetrachloro-m-xylene	0.1 ug/mL
.SG1016/1260_00022	04/24/18	04/24/17	HEXANE, Lot 0000159594	100 mL	SG1016/1260MX_00011	1 mL	PCB-1016 Peak 1	10 ug/mL
							PCB-1016 Peak 2	10 ug/mL
							PCB-1016 Peak 3	10 ug/mL
							PCB-1016 Peak 4	10 ug/mL
							PCB-1016 Peak 5	10 ug/mL
							PCB-1260 Peak 1	10 ug/mL
							PCB-1260 Peak 2	10 ug/mL
							PCB-1260 Peak 3	10 ug/mL
							PCB-1260 Peak 4	10 ug/mL
							PCB-1260 Peak 5	10 ug/mL
..SG1016/1260MX_00011	06/30/21		Restek, Lot A0109664		(Purchased Reagent)		PCB-1016 Peak 1	1000 ug/mL
							PCB-1016 Peak 2	1000 ug/mL
							PCB-1016 Peak 3	1000 ug/mL
							PCB-1016 Peak 4	1000 ug/mL
							PCB-1016 Peak 5	1000 ug/mL
							PCB-1260 Peak 1	1000 ug/mL
							PCB-1260 Peak 2	1000 ug/mL
							PCB-1260 Peak 3	1000 ug/mL
							PCB-1260 Peak 4	1000 ug/mL
							PCB-1260 Peak 5	1000 ug/mL
.SGPCBIS STOCk_00008	04/24/18	04/24/17	HEXANE, Lot 0000159594	50 mL	ISTD_00004	0.5 mL	1-Bromo-2-nitrobenzene	10 ug/mL
..ISTD_00004	04/30/20		Restek, Lot A0124315		(Purchased Reagent)		1-Bromo-2-nitrobenzene	1000 ug/mL
.SGPCGSURRSTK_00008	12/08/17	12/08/16	HEXANE, Lot 0000132636	100 mL	SGPESTSURR_00010	1 mL	DCB Decachlorobiphenyl	2 ug/mL

REAGENT TRACEABILITY SUMMARY

Lab Name: TestAmerica Canton Job No.: 240-81698-1

SDG No.:

Reagent ID	Exp Date	Prep Date	Dilutant Used	Reagent Final Volume	Parent Reagent		Analyte	Concentration
					Reagent ID	Volume Added		
							Tetrachloro-m-xylene	2 ug/mL
..SGPESTSURR_00010	06/22/22		Restek, Lot A0117947		(Purchased Reagent)		DCB Decachlorobiphenyl	200 ug/mL
							Tetrachloro-m-xylene	200 ug/mL
SG1660ICV@1.0_00026	11/03/17	05/03/17	HEXANE, Lot 0000160062	10 mL	SGPCBIS STOCk_00008	0.05 mL	1-Bromo-2-nitrobenzene	0.05 ug/mL
.SGPCBIS STOCk_00008	04/24/18	04/24/17	HEXANE, Lot 0000159594	50 mL	ISTD_00004	0.5 mL	1-Bromo-2-nitrobenzene	10 ug/mL
..ISTD_00004	04/30/20		Restek, Lot A0124315		(Purchased Reagent)		1-Bromo-2-nitrobenzene	1000 ug/mL
SG1660ICV@1.0_00026	11/03/17	05/03/17	HEXANE, Lot 0000160062	10 mL	SG1660ICV@100_00010	0.1 mL	Aroclor-1016	1 ug/mL
							Aroclor-1260	1 ug/mL
					SGPCGSURRSTK_00008	0.25 mL	DCB Decachlorobiphenyl	0.05 ug/mL
							Tetrachloro-m-xylene	0.05 ug/mL
.SG1660ICV@100_00010	03/07/18	03/08/17	HEXANE, Lot 0000132636	10 mL	SG 1660 ICV_00014	1 mL	Aroclor-1016	100 ug/mL
							Aroclor-1260	100 ug/mL
..SG 1660 ICV_00014	01/31/22		restek, Lot a0114674		(Purchased Reagent)		Aroclor-1016	1000 ug/mL
							Aroclor-1260	1000 ug/mL
.SGPCGSURRSTK_00008	12/08/17	12/08/16	HEXANE, Lot 0000132636	100 mL	SGPESTSURR_00010	1 mL	DCB Decachlorobiphenyl	2 ug/mL
							Tetrachloro-m-xylene	2 ug/mL
..SGPESTSURR_00010	06/22/22		Restek, Lot A0117947		(Purchased Reagent)		DCB Decachlorobiphenyl	200 ug/mL
							Tetrachloro-m-xylene	200 ug/mL
SG1660STD@0.1_00020	11/03/17	05/03/17	HEXANE, Lot 0000160062	50 mL	SG1016/1260_00022	0.5 mL	PCB-1016 Peak 1	0.1 ug/mL
							PCB-1016 Peak 2	0.1 ug/mL
							PCB-1016 Peak 3	0.1 ug/mL
							PCB-1016 Peak 4	0.1 ug/mL
							PCB-1016 Peak 5	0.1 ug/mL
							PCB-1260 Peak 1	0.1 ug/mL
							PCB-1260 Peak 2	0.1 ug/mL
							PCB-1260 Peak 3	0.1 ug/mL
							PCB-1260 Peak 4	0.1 ug/mL
							PCB-1260 Peak 5	0.1 ug/mL
					SGPCBIS STOCk_00008	0.25 mL	1-Bromo-2-nitrobenzene	0.05 ug/mL
					SGPCGSURRSTK_00008	0.125 mL	DCB Decachlorobiphenyl	0.005 ug/mL
							Tetrachloro-m-xylene	0.005 ug/mL
.SG1016/1260_00022	04/24/18	04/24/17	HEXANE, Lot 0000159594	100 mL	SG1016/1260MX_00011	1 mL	PCB-1016 Peak 1	10 ug/mL
							PCB-1016 Peak 2	10 ug/mL
							PCB-1016 Peak 3	10 ug/mL
							PCB-1016 Peak 4	10 ug/mL
							PCB-1016 Peak 5	10 ug/mL
							PCB-1260 Peak 1	10 ug/mL
							PCB-1260 Peak 2	10 ug/mL
							PCB-1260 Peak 3	10 ug/mL
							PCB-1260 Peak 4	10 ug/mL
							PCB-1260 Peak 5	10 ug/mL
..SG1016/1260MX_00011	06/30/21		Restek, Lot A0109664		(Purchased Reagent)		PCB-1016 Peak 1	1000 ug/mL
							PCB-1016 Peak 2	1000 ug/mL
							PCB-1016 Peak 3	1000 ug/mL
							PCB-1016 Peak 4	1000 ug/mL
							PCB-1016 Peak 5	1000 ug/mL
							PCB-1260 Peak 1	1000 ug/mL

Lab Name: TestAmerica Canton Job No.: 240-81698-1

SDG No.:

Reagent ID	Exp Date	Prep Date	Dilutant Used	Reagent Final Volume	Parent Reagent		Analyte	Concentration
					Reagent ID	Volume Added		
							PCB-1260 Peak 2	1000 ug/mL
							PCB-1260 Peak 3	1000 ug/mL
							PCB-1260 Peak 4	1000 ug/mL
							PCB-1260 Peak 5	1000 ug/mL
.SGPCBIS STOCk_00008	04/24/18	04/24/17	HEXANE, Lot 0000159594	50 mL	ISTD_00004	0.5 mL	1-Bromo-2-nitrobenzene	10 ug/mL
..ISTD_00004	04/30/20		Restek, Lot A0124315		(Purchased Reagent)		1-Bromo-2-nitrobenzene	1000 ug/mL
.SGPCGSURRSTK_00008	12/08/17	12/08/16	HEXANE, Lot 0000132636	100 mL	SGPESTSURR_00010	1 mL	DCB Decachlorobiphenyl	2 ug/mL
							Tetrachloro-m-xylene	2 ug/mL
..SGPESTSURR_00010	06/22/22		Restek, Lot A0117947		(Purchased Reagent)		DCB Decachlorobiphenyl	200 ug/mL
							Tetrachloro-m-xylene	200 ug/mL
SG2154@0.05PP_00016	11/02/17	05/02/17	HEXANE, Lot 0000160062	50 mL	SG2154@10ppm_00011	0.25 mL	PCB-1221 Peak 1	0.05 ug/mL
							PCB-1221 Peak 2	0.05 ug/mL
							PCB-1221 Peak 3	0.05 ug/mL
							PCB-1254 Peak 1	0.05 ug/mL
							PCB-1254 Peak 2	0.05 ug/mL
							PCB-1254 Peak 3	0.05 ug/mL
							PCB-1254 Peak 4	0.05 ug/mL
							PCB-1254 Peak 5	0.05 ug/mL
					SGPCBIS STOCk_00008	0.25 mL	1-Bromo-2-nitrobenzene	0.05 ug/mL
.SG2154@10ppm_00011	12/06/17	12/06/16	HEXANE, Lot 0000132636	100 mL	SG1221/1254_00003	1 mL	PCB-1221 Peak 1	10 ug/mL
							PCB-1221 Peak 2	10 ug/mL
							PCB-1221 Peak 3	10 ug/mL
							PCB-1254 Peak 1	10 ug/mL
							PCB-1254 Peak 2	10 ug/mL
							PCB-1254 Peak 3	10 ug/mL
							PCB-1254 Peak 4	10 ug/mL
							PCB-1254 Peak 5	10 ug/mL
..SG1221/1254_00003	07/31/21		restek, Lot a0110124		(Purchased Reagent)		PCB-1221 Peak 1	1000 ug/mL
							PCB-1221 Peak 2	1000 ug/mL
							PCB-1221 Peak 3	1000 ug/mL
							PCB-1254 Peak 1	1000 ug/mL
							PCB-1254 Peak 2	1000 ug/mL
							PCB-1254 Peak 3	1000 ug/mL
							PCB-1254 Peak 4	1000 ug/mL
							PCB-1254 Peak 5	1000 ug/mL
.SGPCBIS STOCk_00008	04/24/18	04/24/17	HEXANE, Lot 0000159594	50 mL	ISTD_00004	0.5 mL	1-Bromo-2-nitrobenzene	10 ug/mL
..ISTD_00004	04/30/20		Restek, Lot A0124315		(Purchased Reagent)		1-Bromo-2-nitrobenzene	1000 ug/mL
SG2154@0.2PPM_00017	11/02/17	05/02/17	HEXANE, Lot 0000160062	50 mL	SG2154@10ppm_00011	1 mL	PCB-1221 Peak 1	0.2 ug/mL
							PCB-1221 Peak 2	0.2 ug/mL
							PCB-1221 Peak 3	0.2 ug/mL
							PCB-1254 Peak 1	0.2 ug/mL
							PCB-1254 Peak 2	0.2 ug/mL
							PCB-1254 Peak 3	0.2 ug/mL
							PCB-1254 Peak 4	0.2 ug/mL
							PCB-1254 Peak 5	0.2 ug/mL
					SGPCBIS STOCk_00008	0.25 mL	1-Bromo-2-nitrobenzene	0.05 ug/mL
.SG2154@10ppm_00011	12/06/17	12/06/16	HEXANE, Lot 0000132636	100 mL	SG1221/1254_00003	1 mL	PCB-1221 Peak 1	10 ug/mL

REAGENT TRACEABILITY SUMMARY

Lab Name: TestAmerica Canton Job No.: 240-81698-1

SDG No.:

Reagent ID	Exp Date	Prep Date	Dilutant Used	Reagent Final Volume	Parent Reagent		Analyte	Concentration
					Reagent ID	Volume Added		
							PCB-1221 Peak 2	10 ug/mL
							PCB-1221 Peak 3	10 ug/mL
							PCB-1254 Peak 1	10 ug/mL
							PCB-1254 Peak 2	10 ug/mL
							PCB-1254 Peak 3	10 ug/mL
							PCB-1254 Peak 4	10 ug/mL
							PCB-1254 Peak 5	10 ug/mL
..SG1221/1254_00003	07/31/21		restek, Lot a0110124		(Purchased Reagent)		PCB-1221 Peak 1	1000 ug/mL
							PCB-1221 Peak 2	1000 ug/mL
							PCB-1221 Peak 3	1000 ug/mL
							PCB-1254 Peak 1	1000 ug/mL
							PCB-1254 Peak 2	1000 ug/mL
							PCB-1254 Peak 3	1000 ug/mL
							PCB-1254 Peak 4	1000 ug/mL
							PCB-1254 Peak 5	1000 ug/mL
.SGPCBIS STOCk_00008	04/24/18	04/24/17	HEXANE, Lot 0000159594	50 mL	ISTD_00004	0.5 mL	1-Bromo-2-nitrobenzene	10 ug/mL
..ISTD_00004	04/30/20		Restek, Lot A0124315		(Purchased Reagent)		1-Bromo-2-nitrobenzene	1000 ug/mL
SG2154@0.5PPM_00032	11/02/17	05/02/17	HEXANE, Lot 0000160062	100 mL	SG2154@10ppm_00011	5 mL	PCB-1221 Peak 1	0.5 ug/mL
							PCB-1221 Peak 2	0.5 ug/mL
							PCB-1221 Peak 3	0.5 ug/mL
							PCB-1254 Peak 1	0.5 ug/mL
							PCB-1254 Peak 2	0.5 ug/mL
							PCB-1254 Peak 3	0.5 ug/mL
							PCB-1254 Peak 4	0.5 ug/mL
							PCB-1254 Peak 5	0.5 ug/mL
					SGPCBIS STOCk_00008	0.5 mL	1-Bromo-2-nitrobenzene	0.05 ug/mL
.SG2154@10ppm_00011	12/06/17	12/06/16	HEXANE, Lot 0000132636	100 mL	SG1221/1254_00003	1 mL	PCB-1221 Peak 1	10 ug/mL
							PCB-1221 Peak 2	10 ug/mL
							PCB-1221 Peak 3	10 ug/mL
							PCB-1254 Peak 1	10 ug/mL
							PCB-1254 Peak 2	10 ug/mL
							PCB-1254 Peak 3	10 ug/mL
							PCB-1254 Peak 4	10 ug/mL
							PCB-1254 Peak 5	10 ug/mL
..SG1221/1254_00003	07/31/21		restek, Lot a0110124		(Purchased Reagent)		PCB-1221 Peak 1	1000 ug/mL
							PCB-1221 Peak 2	1000 ug/mL
							PCB-1221 Peak 3	1000 ug/mL
							PCB-1254 Peak 1	1000 ug/mL
							PCB-1254 Peak 2	1000 ug/mL
							PCB-1254 Peak 3	1000 ug/mL
							PCB-1254 Peak 4	1000 ug/mL
							PCB-1254 Peak 5	1000 ug/mL
.SGPCBIS STOCk_00008	04/24/18	04/24/17	HEXANE, Lot 0000159594	50 mL	ISTD_00004	0.5 mL	1-Bromo-2-nitrobenzene	10 ug/mL
..ISTD_00004	04/30/20		Restek, Lot A0124315		(Purchased Reagent)		1-Bromo-2-nitrobenzene	1000 ug/mL
SG2154@0.5PPM_00032	11/02/17	05/02/17	HEXANE, Lot 0000160062	100 mL	SG2154@10ppm_00011	5 mL	Aroclor-1221	0.5 ug/mL
							Aroclor-1254	0.5 ug/mL
.SG2154@10ppm_00011	12/06/17	12/06/16	HEXANE, Lot 0000132636	100 mL	SG1221/1254_00003	1 mL	Aroclor-1221	10 ug/mL

REAGENT TRACEABILITY SUMMARY

Lab Name: TestAmerica Canton Job No.: 240-81698-1

SDG No.:

Reagent ID	Exp Date	Prep Date	Dilutant Used	Reagent Final Volume	Parent Reagent		Analyte	Concentration
					Reagent ID	Volume Added		
							Aroclor-1254	10 ug/mL
..SG1221/1254_00003	07/31/21		restek, Lot a0110124		(Purchased Reagent)		Aroclor-1221	1000 ug/mL
							Aroclor-1254	1000 ug/mL
SG2154@1.0PPM_00021	11/02/17	05/02/17	HEXANE, Lot 0000160026	50 mL	SG2154@10ppm_00011	5 mL	PCB-1221 Peak 1	1 ug/mL
							PCB-1221 Peak 2	1 ug/mL
							PCB-1221 Peak 3	1 ug/mL
							PCB-1254 Peak 1	1 ug/mL
							PCB-1254 Peak 2	1 ug/mL
							PCB-1254 Peak 3	1 ug/mL
							PCB-1254 Peak 4	1 ug/mL
							PCB-1254 Peak 5	1 ug/mL
					SGPCBIS STOCk_00008	0.25 mL	1-Bromo-2-nitrobenzene	0.05 ug/mL
.SG2154@10ppm_00011	12/06/17	12/06/16	HEXANE, Lot 0000132636	100 mL	SG1221/1254_00003	1 mL	PCB-1221 Peak 1	10 ug/mL
							PCB-1221 Peak 2	10 ug/mL
							PCB-1221 Peak 3	10 ug/mL
							PCB-1254 Peak 1	10 ug/mL
							PCB-1254 Peak 2	10 ug/mL
							PCB-1254 Peak 3	10 ug/mL
							PCB-1254 Peak 4	10 ug/mL
							PCB-1254 Peak 5	10 ug/mL
..SG1221/1254_00003	07/31/21		restek, Lot a0110124		(Purchased Reagent)		PCB-1221 Peak 1	1000 ug/mL
							PCB-1221 Peak 2	1000 ug/mL
							PCB-1221 Peak 3	1000 ug/mL
							PCB-1254 Peak 1	1000 ug/mL
							PCB-1254 Peak 2	1000 ug/mL
							PCB-1254 Peak 3	1000 ug/mL
							PCB-1254 Peak 4	1000 ug/mL
							PCB-1254 Peak 5	1000 ug/mL
.SGPCBIS STOCk_00008	04/24/18	04/24/17	HEXANE, Lot 0000159594	50 mL	ISTD_00004	0.5 mL	1-Bromo-2-nitrobenzene	10 ug/mL
..ISTD_00004	04/30/20		Restek, Lot A0124315		(Purchased Reagent)		1-Bromo-2-nitrobenzene	1000 ug/mL
SG2154@1.5PPM_00001	11/02/17	05/02/17	HEXANE, Lot 0000160062	50 mL	SG2154@10ppm_00011	7.5 mL	PCB-1221 Peak 1	1.5 ug/mL
							PCB-1221 Peak 2	1.5 ug/mL
							PCB-1221 Peak 3	1.5 ug/mL
							PCB-1254 Peak 1	1.5 ug/mL
							PCB-1254 Peak 2	1.5 ug/mL
							PCB-1254 Peak 3	1.5 ug/mL
							PCB-1254 Peak 4	1.5 ug/mL
							PCB-1254 Peak 5	1.5 ug/mL
					SGPCBIS STOCk_00008	0.25 mL	1-Bromo-2-nitrobenzene	0.05 ug/mL
.SG2154@10ppm_00011	12/06/17	12/06/16	HEXANE, Lot 0000132636	100 mL	SG1221/1254_00003	1 mL	PCB-1221 Peak 1	10 ug/mL
							PCB-1221 Peak 2	10 ug/mL
							PCB-1221 Peak 3	10 ug/mL
							PCB-1254 Peak 1	10 ug/mL
							PCB-1254 Peak 2	10 ug/mL
							PCB-1254 Peak 3	10 ug/mL
							PCB-1254 Peak 4	10 ug/mL
							PCB-1254 Peak 5	10 ug/mL

REAGENT TRACEABILITY SUMMARY

Lab Name: TestAmerica Canton Job No.: 240-81698-1

SDG No.:

Reagent ID	Exp Date	Prep Date	Dilutant Used	Reagent Final Volume	Parent Reagent		Analyte	Concentration
					Reagent ID	Volume Added		
..SG1221/1254_00003	07/31/21		restek, Lot a0110124		(Purchased Reagent)		PCB-1221 Peak 1	1000 ug/mL
							PCB-1221 Peak 2	1000 ug/mL
							PCB-1221 Peak 3	1000 ug/mL
							PCB-1254 Peak 1	1000 ug/mL
							PCB-1254 Peak 2	1000 ug/mL
							PCB-1254 Peak 3	1000 ug/mL
							PCB-1254 Peak 4	1000 ug/mL
							PCB-1254 Peak 5	1000 ug/mL
.SGPCBIS STOCk_00008	04/24/18	04/24/17	HEXANE, Lot 0000159594	50 mL	ISTD_00004	0.5 mL	1-Bromo-2-nitrobenzene	10 ug/mL
..ISTD_00004	04/30/20		Restek, Lot A0124315		(Purchased Reagent)		1-Bromo-2-nitrobenzene	1000 ug/mL
SG2154@O.1PPM_00018	11/02/17	05/02/17	HEXANE, Lot 0000160062	50 mL	SG2154@10ppm_00011	0.5 mL	PCB-1221 Peak 1	0.1 ug/mL
							PCB-1221 Peak 2	0.1 ug/mL
							PCB-1221 Peak 3	0.1 ug/mL
							PCB-1254 Peak 1	0.1 ug/mL
							PCB-1254 Peak 2	0.1 ug/mL
							PCB-1254 Peak 3	0.1 ug/mL
							PCB-1254 Peak 4	0.1 ug/mL
							PCB-1254 Peak 5	0.1 ug/mL
					SGPCBIS STOCk_00008	0.25 mL	1-Bromo-2-nitrobenzene	0.05 ug/mL
.SG2154@10ppm_00011	12/06/17	12/06/16	HEXANE, Lot 0000132636	100 mL	SG1221/1254_00003	1 mL	PCB-1221 Peak 1	10 ug/mL
							PCB-1221 Peak 2	10 ug/mL
							PCB-1221 Peak 3	10 ug/mL
							PCB-1254 Peak 1	10 ug/mL
							PCB-1254 Peak 2	10 ug/mL
							PCB-1254 Peak 3	10 ug/mL
							PCB-1254 Peak 4	10 ug/mL
							PCB-1254 Peak 5	10 ug/mL
..SG1221/1254_00003	07/31/21		restek, Lot a0110124		(Purchased Reagent)		PCB-1221 Peak 1	1000 ug/mL
							PCB-1221 Peak 2	1000 ug/mL
							PCB-1221 Peak 3	1000 ug/mL
							PCB-1254 Peak 1	1000 ug/mL
							PCB-1254 Peak 2	1000 ug/mL
							PCB-1254 Peak 3	1000 ug/mL
							PCB-1254 Peak 4	1000 ug/mL
							PCB-1254 Peak 5	1000 ug/mL
.SGPCBIS STOCk_00008	04/24/18	04/24/17	HEXANE, Lot 0000159594	50 mL	ISTD_00004	0.5 mL	1-Bromo-2-nitrobenzene	10 ug/mL
..ISTD_00004	04/30/20		Restek, Lot A0124315		(Purchased Reagent)		1-Bromo-2-nitrobenzene	1000 ug/mL
SG3262@.05PPM_00009	10/26/17	04/26/17	HEXANE, Lot 0000160062	50 mL	SG32/6210PPM_00006	0.25 mL	PCB-1232 Peak 1	50 ug/L
							PCB-1232 Peak 2	50 ug/L
							PCB-1232 Peak 3	50 ug/L
							PCB-1232 Peak 4	50 ug/L
							PCB-1232 Peak 5	50 ug/L
							PCB-1262 Peak 1	50 ug/L
							PCB-1262 Peak 2	50 ug/L
							PCB-1262 Peak 3	50 ug/L
							PCB-1262 Peak 4	50 ug/L
							PCB-1262 Peak 5	50 ug/L

REAGENT TRACEABILITY SUMMARY

Lab Name: TestAmerica Canton Job No.: 240-81698-1

SDG No.:

Reagent ID	Exp Date	Prep Date	Dilutant Used	Reagent Final Volume	Parent Reagent		Analyte	Concentration
					Reagent ID	Volume Added		
					SGPCBIS STOCk_00008	0.25 mL	1-Bromo-2-nitrobenzene	50 ug/L
.SG32/6210PPM_00006	11/29/17	11/29/16	HEXANE, Lot 0000146278	100 mL	SG32/62 STK_00002	1 mL	PCB-1232 Peak 1	10 ug/mL
							PCB-1232 Peak 2	10 ug/mL
							PCB-1232 Peak 3	10 ug/mL
							PCB-1232 Peak 4	10 ug/mL
							PCB-1232 Peak 5	10 ug/mL
							PCB-1262 Peak 1	10 ug/mL
							PCB-1262 Peak 2	10 ug/mL
							PCB-1262 Peak 3	10 ug/mL
							PCB-1262 Peak 4	10 ug/mL
							PCB-1262 Peak 5	10 ug/mL
..SG32/62 STK_00002	10/31/21	Restelk, Lot A0112323			(Purchased Reagent)		PCB-1232 Peak 1	1000 ug/mL
							PCB-1232 Peak 2	1000 ug/mL
							PCB-1232 Peak 3	1000 ug/mL
							PCB-1232 Peak 4	1000 ug/mL
							PCB-1232 Peak 5	1000 ug/mL
							PCB-1262 Peak 1	1000 ug/mL
							PCB-1262 Peak 2	1000 ug/mL
							PCB-1262 Peak 3	1000 ug/mL
							PCB-1262 Peak 4	1000 ug/mL
							PCB-1262 Peak 5	1000 ug/mL
.SGPCBIS STOCk_00008	04/24/18	04/24/17	HEXANE, Lot 0000159594	50 mL	ISTD_00004	0.5 mL	1-Bromo-2-nitrobenzene	10 ug/mL
..ISTD_00004	04/30/20	Restek, Lot A0124315			(Purchased Reagent)		1-Bromo-2-nitrobenzene	1000 ug/mL
SG3262@.2PPM_00013	10/26/17	04/26/17	HEXANE, Lot 0000160062	50 mL	SG32/6210PPM_00006	1 mL	PCB-1232 Peak 1	200 ug/L
							PCB-1232 Peak 2	200 ug/L
							PCB-1232 Peak 3	200 ug/L
							PCB-1232 Peak 4	200 ug/L
							PCB-1232 Peak 5	200 ug/L
							PCB-1262 Peak 1	200 ug/L
							PCB-1262 Peak 2	200 ug/L
							PCB-1262 Peak 3	200 ug/L
							PCB-1262 Peak 4	200 ug/L
							PCB-1262 Peak 5	200 ug/L
					SGPCBIS STOCk_00008	0.25 mL	1-Bromo-2-nitrobenzene	50 ug/L
.SG32/6210PPM_00006	11/29/17	11/29/16	HEXANE, Lot 0000146278	100 mL	SG32/62 STK_00002	1 mL	PCB-1232 Peak 1	10 ug/mL
							PCB-1232 Peak 2	10 ug/mL
							PCB-1232 Peak 3	10 ug/mL
							PCB-1232 Peak 4	10 ug/mL
							PCB-1232 Peak 5	10 ug/mL
							PCB-1262 Peak 1	10 ug/mL
							PCB-1262 Peak 2	10 ug/mL
							PCB-1262 Peak 3	10 ug/mL
							PCB-1262 Peak 4	10 ug/mL
							PCB-1262 Peak 5	10 ug/mL
..SG32/62 STK_00002	10/31/21	Restelk, Lot A0112323			(Purchased Reagent)		PCB-1232 Peak 1	1000 ug/mL
							PCB-1232 Peak 2	1000 ug/mL
							PCB-1232 Peak 3	1000 ug/mL

REAGENT TRACEABILITY SUMMARY

Lab Name: TestAmerica Canton Job No.: 240-81698-1

SDG No.:

Reagent ID	Exp Date	Prep Date	Dilutant Used	Reagent Final Volume	Parent Reagent		Analyte	Concentration
					Reagent ID	Volume Added		
							PCB-1232 Peak 4	1000 ug/mL
							PCB-1232 Peak 5	1000 ug/mL
							PCB-1262 Peak 1	1000 ug/mL
							PCB-1262 Peak 2	1000 ug/mL
							PCB-1262 Peak 3	1000 ug/mL
							PCB-1262 Peak 4	1000 ug/mL
							PCB-1262 Peak 5	1000 ug/mL
.SGPCBIS STOCk_00008	04/24/18	04/24/17	HEXANE, Lot 0000159594	50 mL	ISTD_00004	0.5 mL	1-Bromo-2-nitrobenzene	10 ug/mL
..ISTD_00004	04/30/20	Restek, Lot A0124315			(Purchased Reagent)		1-Bromo-2-nitrobenzene	1000 ug/mL
SG3262@0.1PPM_00010	10/26/17	04/26/17	HEXANE, Lot 0000160062	50 mL	SG32/6210PPM_00006	0.5 mL	PCB-1232 Peak 1	100 ug/L
							PCB-1232 Peak 2	100 ug/L
							PCB-1232 Peak 3	100 ug/L
							PCB-1232 Peak 4	100 ug/L
							PCB-1232 Peak 5	100 ug/L
							PCB-1262 Peak 1	100 ug/L
							PCB-1262 Peak 2	100 ug/L
							PCB-1262 Peak 3	100 ug/L
							PCB-1262 Peak 4	100 ug/L
							PCB-1262 Peak 5	100 ug/L
					SGPCBIS STOCk_00008	0.25 mL	1-Bromo-2-nitrobenzene	50 ug/L
.SG32/6210PPM_00006	11/29/17	11/29/16	HEXANE, Lot 0000146278	100 mL	SG32/62 STK_00002	1 mL	PCB-1232 Peak 1	10 ug/mL
							PCB-1232 Peak 2	10 ug/mL
							PCB-1232 Peak 3	10 ug/mL
							PCB-1232 Peak 4	10 ug/mL
							PCB-1232 Peak 5	10 ug/mL
							PCB-1262 Peak 1	10 ug/mL
							PCB-1262 Peak 2	10 ug/mL
							PCB-1262 Peak 3	10 ug/mL
							PCB-1262 Peak 4	10 ug/mL
							PCB-1262 Peak 5	10 ug/mL
..SG32/62 STK_00002	10/31/21	Restelk, Lot A0112323			(Purchased Reagent)		PCB-1232 Peak 1	1000 ug/mL
							PCB-1232 Peak 2	1000 ug/mL
							PCB-1232 Peak 3	1000 ug/mL
							PCB-1232 Peak 4	1000 ug/mL
							PCB-1232 Peak 5	1000 ug/mL
							PCB-1262 Peak 1	1000 ug/mL
							PCB-1262 Peak 2	1000 ug/mL
							PCB-1262 Peak 3	1000 ug/mL
							PCB-1262 Peak 4	1000 ug/mL
							PCB-1262 Peak 5	1000 ug/mL
.SGPCBIS STOCk_00008	04/24/18	04/24/17	HEXANE, Lot 0000159594	50 mL	ISTD_00004	0.5 mL	1-Bromo-2-nitrobenzene	10 ug/mL
..ISTD_00004	04/30/20	Restek, Lot A0124315			(Purchased Reagent)		1-Bromo-2-nitrobenzene	1000 ug/mL
SG3262@0.5PPM_00019	10/25/17	04/26/17	HEXANE, Lot 0000160062	100 mL	SG32/6210PPM_00006	5 mL	PCB-1232 Peak 1	500 ug/L
							PCB-1232 Peak 2	500 ug/L
							PCB-1232 Peak 3	500 ug/L
							PCB-1232 Peak 4	500 ug/L
							PCB-1232 Peak 5	500 ug/L

REAGENT TRACEABILITY SUMMARY

Lab Name: TestAmerica Canton Job No.: 240-81698-1

SDG No.:

Reagent ID	Exp Date	Prep Date	Dilutant Used	Reagent Final Volume	Parent Reagent		Analyte	Concentration
					Reagent ID	Volume Added		
							PCB-1262 Peak 1	500 ug/L
							PCB-1262 Peak 2	500 ug/L
							PCB-1262 Peak 3	500 ug/L
							PCB-1262 Peak 4	500 ug/L
							PCB-1262 Peak 5	500 ug/L
					SGPCBIS STOCk_00008	0.5 mL	1-Bromo-2-nitrobenzene	50 ug/L
.SG32/6210PPM_00006	11/29/17	11/29/16	HEXANE, Lot 0000146278	100 mL	SG32/62 STK_00002	1 mL	PCB-1232 Peak 1	10 ug/mL
							PCB-1232 Peak 2	10 ug/mL
							PCB-1232 Peak 3	10 ug/mL
							PCB-1232 Peak 4	10 ug/mL
							PCB-1232 Peak 5	10 ug/mL
							PCB-1262 Peak 1	10 ug/mL
							PCB-1262 Peak 2	10 ug/mL
							PCB-1262 Peak 3	10 ug/mL
							PCB-1262 Peak 4	10 ug/mL
							PCB-1262 Peak 5	10 ug/mL
..SG32/62 STK_00002	10/31/21		Restelk, Lot A0112323		(Purchased Reagent)		PCB-1232 Peak 1	1000 ug/mL
							PCB-1232 Peak 2	1000 ug/mL
							PCB-1232 Peak 3	1000 ug/mL
							PCB-1232 Peak 4	1000 ug/mL
							PCB-1232 Peak 5	1000 ug/mL
							PCB-1262 Peak 1	1000 ug/mL
							PCB-1262 Peak 2	1000 ug/mL
							PCB-1262 Peak 3	1000 ug/mL
							PCB-1262 Peak 4	1000 ug/mL
							PCB-1262 Peak 5	1000 ug/mL
.SGPCBIS STOCk_00008	04/24/18	04/24/17	HEXANE, Lot 0000159594	50 mL	ISTD_00004	0.5 mL	1-Bromo-2-nitrobenzene	10 ug/mL
..ISTD_00004	04/30/20		Restek, Lot A0124315		(Purchased Reagent)		1-Bromo-2-nitrobenzene	1000 ug/mL
SG3262@0.5PPM_00019	10/25/17	04/26/17	HEXANE, Lot 0000160062	100 mL	SG32/6210PPM_00006	5 mL	Aroclor-1232	500 ug/L
							PCB-1262	500 ug/L
.SG32/6210PPM_00006	11/29/17	11/29/16	HEXANE, Lot 0000146278	100 mL	SG32/62 STK_00002	1 mL	Aroclor-1232	10 ug/mL
							PCB-1262	10 ug/mL
..SG32/62 STK_00002	10/31/21		Restelk, Lot A0112323		(Purchased Reagent)		Aroclor-1232	1000 ug/mL
							PCB-1262	1000 ug/mL
SG3262@1.0PPM_00012	10/26/17	04/26/17	HEXANE, Lot 0000160062	50 mL	SG32/6210PPM_00006	5 mL	PCB-1232 Peak 1	1000 ug/L
							PCB-1232 Peak 2	1000 ug/L
							PCB-1232 Peak 3	1000 ug/L
							PCB-1232 Peak 4	1000 ug/L
							PCB-1232 Peak 5	1000 ug/L
							PCB-1262 Peak 1	1000 ug/L
							PCB-1262 Peak 2	1000 ug/L
							PCB-1262 Peak 3	1000 ug/L
							PCB-1262 Peak 4	1000 ug/L
							PCB-1262 Peak 5	1000 ug/L
					SGPCBIS STOCk_00008	0.25 mL	1-Bromo-2-nitrobenzene	50 ug/L
.SG32/6210PPM_00006	11/29/17	11/29/16	HEXANE, Lot 0000146278	100 mL	SG32/62 STK_00002	1 mL	PCB-1232 Peak 1	10 ug/mL
							PCB-1232 Peak 2	10 ug/mL

REAGENT TRACEABILITY SUMMARY

Lab Name: TestAmerica Canton Job No.: 240-81698-1

SDG No.:

Reagent ID	Exp Date	Prep Date	Dilutant Used	Reagent Final Volume	Parent Reagent		Analyte	Concentration
					Reagent ID	Volume Added		
							PCB-1232 Peak 3	10 ug/mL
							PCB-1232 Peak 4	10 ug/mL
							PCB-1232 Peak 5	10 ug/mL
							PCB-1262 Peak 1	10 ug/mL
							PCB-1262 Peak 2	10 ug/mL
							PCB-1262 Peak 3	10 ug/mL
							PCB-1262 Peak 4	10 ug/mL
							PCB-1262 Peak 5	10 ug/mL
..SG32/62 STK_00002	10/31/21		Restelk, Lot A0112323		(Purchased Reagent)		PCB-1232 Peak 1	1000 ug/mL
							PCB-1232 Peak 2	1000 ug/mL
							PCB-1232 Peak 3	1000 ug/mL
							PCB-1232 Peak 4	1000 ug/mL
							PCB-1232 Peak 5	1000 ug/mL
							PCB-1262 Peak 1	1000 ug/mL
							PCB-1262 Peak 2	1000 ug/mL
							PCB-1262 Peak 3	1000 ug/mL
							PCB-1262 Peak 4	1000 ug/mL
							PCB-1262 Peak 5	1000 ug/mL
.SGPCBIS STOCk_00008	04/24/18	04/24/17	HEXANE, Lot 0000159594	50 mL	ISTD_00004	0.5 mL	1-Bromo-2-nitrobenzene	10 ug/mL
..ISTD_00004	04/30/20		Restek, Lot A0124315		(Purchased Reagent)		1-Bromo-2-nitrobenzene	1000 ug/mL
SG3262@1.5PPM_00001	10/26/17	04/26/17	HEXANE, Lot 0000160062	50 mL	SG32/6210PPM_00006	7.5 mL	PCB-1232 Peak 1	1500 ug/L
							PCB-1232 Peak 2	1500 ug/L
							PCB-1232 Peak 3	1500 ug/L
							PCB-1232 Peak 4	1500 ug/L
							PCB-1232 Peak 5	1500 ug/L
							PCB-1262 Peak 1	1500 ug/L
							PCB-1262 Peak 2	1500 ug/L
							PCB-1262 Peak 3	1500 ug/L
							PCB-1262 Peak 4	1500 ug/L
							PCB-1262 Peak 5	1500 ug/L
					SGPCBIS STOCk_00008	0.25 mL	1-Bromo-2-nitrobenzene	50 ug/L
.SG32/6210PPM_00006	11/29/17	11/29/16	HEXANE, Lot 0000146278	100 mL	SG32/62 STK_00002	1 mL	PCB-1232 Peak 1	10 ug/mL
							PCB-1232 Peak 2	10 ug/mL
							PCB-1232 Peak 3	10 ug/mL
							PCB-1232 Peak 4	10 ug/mL
							PCB-1232 Peak 5	10 ug/mL
							PCB-1262 Peak 1	10 ug/mL
							PCB-1262 Peak 2	10 ug/mL
							PCB-1262 Peak 3	10 ug/mL
							PCB-1262 Peak 4	10 ug/mL
							PCB-1262 Peak 5	10 ug/mL
..SG32/62 STK_00002	10/31/21		Restelk, Lot A0112323		(Purchased Reagent)		PCB-1232 Peak 1	1000 ug/mL
							PCB-1232 Peak 2	1000 ug/mL
							PCB-1232 Peak 3	1000 ug/mL
							PCB-1232 Peak 4	1000 ug/mL
							PCB-1232 Peak 5	1000 ug/mL
							PCB-1262 Peak 1	1000 ug/mL

REAGENT TRACEABILITY SUMMARY

Lab Name: TestAmerica Canton Job No.: 240-81698-1

SDG No.:

Reagent ID	Exp Date	Prep Date	Dilutant Used	Reagent Final Volume	Parent Reagent		Analyte	Concentration
					Reagent ID	Volume Added		
							PCB-1262 Peak 2	1000 ug/mL
							PCB-1262 Peak 3	1000 ug/mL
							PCB-1262 Peak 4	1000 ug/mL
							PCB-1262 Peak 5	1000 ug/mL
.SGPCBIS STOCk_00008	04/24/18	04/24/17	HEXANE, Lot 0000159594	50 mL	ISTD_00004	0.5 mL	1-Bromo-2-nitrobenzene	10 ug/mL
..ISTD_00004	04/30/20		Restek, Lot A0124315		(Purchased Reagent)		1-Bromo-2-nitrobenzene	1000 ug/mL
SG42/68@1.0PP_00016	10/27/17	04/27/17	HEXANE, Lot 0000160062	50 mL	SG42/6810PPM_00005	5 mL	PCB-1242 Peak 1	1000 ug/L
							PCB-1242 Peak 2	1000 ug/L
							PCB-1242 Peak 3	1000 ug/L
							PCB-1242 Peak 4	1000 ug/L
							PCB-1242 Peak 5	1000 ug/L
							PCB-1268 Peak 1	1000 ug/L
							PCB-1268 Peak 2	1000 ug/L
							PCB-1268 Peak 3	1000 ug/L
							PCB-1268 Peak 4	1000 ug/L
							PCB-1268 Peak 5	1000 ug/L
					SGPCBIS STOCk_00008	0.25 mL	1-Bromo-2-nitrobenzene	50 ug/L
.SG42/6810PPM_00005	04/24/18	04/24/17	HEXANE, Lot 0000159594	100 mL	SG 42/68 STK_00002	1 mL	PCB-1242 Peak 1	10000 ug/L
							PCB-1242 Peak 2	10000 ug/L
							PCB-1242 Peak 3	10000 ug/L
							PCB-1242 Peak 4	10000 ug/L
							PCB-1242 Peak 5	10000 ug/L
							PCB-1268 Peak 1	10000 ug/L
							PCB-1268 Peak 2	10000 ug/L
							PCB-1268 Peak 3	10000 ug/L
							PCB-1268 Peak 4	10000 ug/L
							PCB-1268 Peak 5	10000 ug/L
..SG 42/68 STK_00002	04/30/22		RESTEK, Lot A0116616		(Purchased Reagent)		PCB-1242 Peak 1	1000 ug/mL
							PCB-1242 Peak 2	1000 ug/mL
							PCB-1242 Peak 3	1000 ug/mL
							PCB-1242 Peak 4	1000 ug/mL
							PCB-1242 Peak 5	1000 ug/mL
							PCB-1268 Peak 1	1000 ug/mL
							PCB-1268 Peak 2	1000 ug/mL
							PCB-1268 Peak 3	1000 ug/mL
							PCB-1268 Peak 4	1000 ug/mL
							PCB-1268 Peak 5	1000 ug/mL
.SGPCBIS STOCk_00008	04/24/18	04/24/17	HEXANE, Lot 0000159594	50 mL	ISTD_00004	0.5 mL	1-Bromo-2-nitrobenzene	10 ug/mL
..ISTD_00004	04/30/20		Restek, Lot A0124315		(Purchased Reagent)		1-Bromo-2-nitrobenzene	1000 ug/mL
SG4268@.05PPM_00009	10/27/17	04/27/17	HEXANE, Lot 0000160062	50 mL	SG42/6810PPM_00005	0.25 mL	PCB-1242 Peak 1	50 ug/L
							PCB-1242 Peak 2	50 ug/L
							PCB-1242 Peak 3	50 ug/L
							PCB-1242 Peak 4	50 ug/L
							PCB-1242 Peak 5	50 ug/L
							PCB-1268 Peak 1	50 ug/L
							PCB-1268 Peak 2	50 ug/L
							PCB-1268 Peak 3	50 ug/L

REAGENT TRACEABILITY SUMMARY

Lab Name: TestAmerica Canton Job No.: 240-81698-1

SDG No.:

Reagent ID	Exp Date	Prep Date	Dilutant Used	Reagent Final Volume	Parent Reagent		Analyte	Concentration
					Reagent ID	Volume Added		
							PCB-1268 Peak 4	50 ug/L
							PCB-1268 Peak 5	50 ug/L
					SGPCBIS STOCk_00008	0.25 mL	1-Bromo-2-nitrobenzene	50 ug/L
.SG42/6810PPM_00005	04/24/18	04/24/17	HEXANE, Lot 0000159594	100 mL	SG 42/68 STK_00002	1 mL	PCB-1242 Peak 1	10000 ug/L
							PCB-1242 Peak 2	10000 ug/L
							PCB-1242 Peak 3	10000 ug/L
							PCB-1242 Peak 4	10000 ug/L
							PCB-1242 Peak 5	10000 ug/L
							PCB-1268 Peak 1	10000 ug/L
							PCB-1268 Peak 2	10000 ug/L
							PCB-1268 Peak 3	10000 ug/L
							PCB-1268 Peak 4	10000 ug/L
							PCB-1268 Peak 5	10000 ug/L
..SG 42/68 STK_00002	04/30/22	RESTEK, Lot A0116616			(Purchased Reagent)		PCB-1242 Peak 1	1000 ug/mL
							PCB-1242 Peak 2	1000 ug/mL
							PCB-1242 Peak 3	1000 ug/mL
							PCB-1242 Peak 4	1000 ug/mL
							PCB-1242 Peak 5	1000 ug/mL
							PCB-1268 Peak 1	1000 ug/mL
							PCB-1268 Peak 2	1000 ug/mL
							PCB-1268 Peak 3	1000 ug/mL
							PCB-1268 Peak 4	1000 ug/mL
							PCB-1268 Peak 5	1000 ug/mL
.SGPCBIS STOCk_00008	04/24/18	04/24/17	HEXANE, Lot 0000159594	50 mL	ISTD_00004	0.5 mL	1-Bromo-2-nitrobenzene	10 ug/mL
..ISTD_00004	04/30/20	Restek, Lot A0124315			(Purchased Reagent)		1-Bromo-2-nitrobenzene	1000 ug/mL
SG4268@.1PPM_00010	10/27/17	04/27/17	HEXANE, Lot 0000160062	50 mL	SG42/6810PPM_00005	0.5 mL	PCB-1242 Peak 1	100 ug/L
							PCB-1242 Peak 2	100 ug/L
							PCB-1242 Peak 3	100 ug/L
							PCB-1242 Peak 4	100 ug/L
							PCB-1242 Peak 5	100 ug/L
							PCB-1268 Peak 1	100 ug/L
							PCB-1268 Peak 2	100 ug/L
							PCB-1268 Peak 3	100 ug/L
							PCB-1268 Peak 4	100 ug/L
							PCB-1268 Peak 5	100 ug/L
					SGPCBIS STOCk_00008	0.25 mL	1-Bromo-2-nitrobenzene	50 ug/L
.SG42/6810PPM_00005	04/24/18	04/24/17	HEXANE, Lot 0000159594	100 mL	SG 42/68 STK_00002	1 mL	PCB-1242 Peak 1	10000 ug/L
							PCB-1242 Peak 2	10000 ug/L
							PCB-1242 Peak 3	10000 ug/L
							PCB-1242 Peak 4	10000 ug/L
							PCB-1242 Peak 5	10000 ug/L
							PCB-1268 Peak 1	10000 ug/L
							PCB-1268 Peak 2	10000 ug/L
							PCB-1268 Peak 3	10000 ug/L
							PCB-1268 Peak 4	10000 ug/L
							PCB-1268 Peak 5	10000 ug/L
..SG 42/68 STK_00002	04/30/22	RESTEK, Lot A0116616			(Purchased Reagent)		PCB-1242 Peak 1	1000 ug/mL

REAGENT TRACEABILITY SUMMARY

Lab Name: TestAmerica Canton Job No.: 240-81698-1

SDG No.:

Reagent ID	Exp Date	Prep Date	Dilutant Used	Reagent Final Volume	Parent Reagent		Analyte	Concentration
					Reagent ID	Volume Added		
							PCB-1242 Peak 2	1000 ug/mL
							PCB-1242 Peak 3	1000 ug/mL
							PCB-1242 Peak 4	1000 ug/mL
							PCB-1242 Peak 5	1000 ug/mL
							PCB-1268 Peak 1	1000 ug/mL
							PCB-1268 Peak 2	1000 ug/mL
							PCB-1268 Peak 3	1000 ug/mL
							PCB-1268 Peak 4	1000 ug/mL
							PCB-1268 Peak 5	1000 ug/mL
.SGPCBIS STOCk_00008	04/24/18	04/24/17	HEXANE, Lot 0000159594	50 mL	ISTD_00004	0.5 mL	1-Bromo-2-nitrobenzene	10 ug/mL
..ISTD_00004	04/30/20		Restek, Lot A0124315		(Purchased Reagent)		1-Bromo-2-nitrobenzene	1000 ug/mL
SG4268@.2PPM_00010	10/27/17	04/27/17	HEXANE, Lot 0000160062	50 mL	SG42/6810PPM_00005	1 mL	PCB-1242 Peak 1	200 ug/L
							PCB-1242 Peak 2	200 ug/L
							PCB-1242 Peak 3	200 ug/L
							PCB-1242 Peak 4	200 ug/L
							PCB-1242 Peak 5	200 ug/L
							PCB-1268 Peak 1	200 ug/L
							PCB-1268 Peak 2	200 ug/L
							PCB-1268 Peak 3	200 ug/L
							PCB-1268 Peak 4	200 ug/L
							PCB-1268 Peak 5	200 ug/L
					SGPCBIS STOCk_00008	0.25 mL	1-Bromo-2-nitrobenzene	50 ug/L
.SG42/6810PPM_00005	04/24/18	04/24/17	HEXANE, Lot 0000159594	100 mL	SG 42/68 STK_00002	1 mL	PCB-1242 Peak 1	10000 ug/L
							PCB-1242 Peak 2	10000 ug/L
							PCB-1242 Peak 3	10000 ug/L
							PCB-1242 Peak 4	10000 ug/L
							PCB-1242 Peak 5	10000 ug/L
							PCB-1268 Peak 1	10000 ug/L
							PCB-1268 Peak 2	10000 ug/L
							PCB-1268 Peak 3	10000 ug/L
							PCB-1268 Peak 4	10000 ug/L
							PCB-1268 Peak 5	10000 ug/L
..SG 42/68 STK_00002	04/30/22		RESTEK, Lot A0116616		(Purchased Reagent)		PCB-1242 Peak 1	1000 ug/mL
							PCB-1242 Peak 2	1000 ug/mL
							PCB-1242 Peak 3	1000 ug/mL
							PCB-1242 Peak 4	1000 ug/mL
							PCB-1242 Peak 5	1000 ug/mL
							PCB-1268 Peak 1	1000 ug/mL
							PCB-1268 Peak 2	1000 ug/mL
							PCB-1268 Peak 3	1000 ug/mL
							PCB-1268 Peak 4	1000 ug/mL
							PCB-1268 Peak 5	1000 ug/mL
.SGPCBIS STOCk_00008	04/24/18	04/24/17	HEXANE, Lot 0000159594	50 mL	ISTD_00004	0.5 mL	1-Bromo-2-nitrobenzene	10 ug/mL
..ISTD_00004	04/30/20		Restek, Lot A0124315		(Purchased Reagent)		1-Bromo-2-nitrobenzene	1000 ug/mL
SG4268@0.5PPM_00021	10/27/17	04/27/17	HEXANE, Lot 0000160062	100 mL	SG42/6810PPM_00005	5 mL	PCB-1242 Peak 1	500 ug/L
							PCB-1242 Peak 2	500 ug/L
							PCB-1242 Peak 3	500 ug/L

REAGENT TRACEABILITY SUMMARY

Lab Name: TestAmerica Canton Job No.: 240-81698-1

SDG No.:

Reagent ID	Exp Date	Prep Date	Dilutant Used	Reagent Final Volume	Parent Reagent		Analyte	Concentration
					Reagent ID	Volume Added		
							PCB-1242 Peak 4	500 ug/L
							PCB-1242 Peak 5	500 ug/L
							PCB-1268 Peak 1	500 ug/L
							PCB-1268 Peak 2	500 ug/L
							PCB-1268 Peak 3	500 ug/L
							PCB-1268 Peak 4	500 ug/L
							PCB-1268 Peak 5	500 ug/L
					SGPCBIS STOCk_00008	0.5 mL	1-Bromo-2-nitrobenzene	50 ug/L
.SG42/6810PPM_00005	04/24/18	04/24/17	HEXANE, Lot 0000159594	100 mL	SG 42/68 STK_00002	1 mL	PCB-1242 Peak 1	10000 ug/L
							PCB-1242 Peak 2	10000 ug/L
							PCB-1242 Peak 3	10000 ug/L
							PCB-1242 Peak 4	10000 ug/L
							PCB-1242 Peak 5	10000 ug/L
							PCB-1268 Peak 1	10000 ug/L
							PCB-1268 Peak 2	10000 ug/L
							PCB-1268 Peak 3	10000 ug/L
							PCB-1268 Peak 4	10000 ug/L
							PCB-1268 Peak 5	10000 ug/L
..SG 42/68 STK_00002	04/30/22		RESTEK, Lot A0116616		(Purchased Reagent)		PCB-1242 Peak 1	1000 ug/mL
							PCB-1242 Peak 2	1000 ug/mL
							PCB-1242 Peak 3	1000 ug/mL
							PCB-1242 Peak 4	1000 ug/mL
							PCB-1242 Peak 5	1000 ug/mL
							PCB-1268 Peak 1	1000 ug/mL
							PCB-1268 Peak 2	1000 ug/mL
							PCB-1268 Peak 3	1000 ug/mL
							PCB-1268 Peak 4	1000 ug/mL
							PCB-1268 Peak 5	1000 ug/mL
.SGPCBIS STOCk_00008	04/24/18	04/24/17	HEXANE, Lot 0000159594	50 mL	ISTD_00004	0.5 mL	1-Bromo-2-nitrobenzene	10 ug/mL
..ISTD_00004	04/30/20		Restek, Lot A0124315		(Purchased Reagent)		1-Bromo-2-nitrobenzene	1000 ug/mL
SG4268@0.5PPM_00021	10/27/17	04/27/17	HEXANE, Lot 0000160062	100 mL	SG42/6810PPM_00005	5 mL	Aroclor-1242	500 ug/L
							PCB-1268	500 ug/L
.SG42/6810PPM_00005	04/24/18	04/24/17	HEXANE, Lot 0000159594	100 mL	SG 42/68 STK_00002	1 mL	Aroclor-1242	10000 ug/L
							PCB-1268	10000 ug/L
..SG 42/68 STK_00002	04/30/22		RESTEK, Lot A0116616		(Purchased Reagent)		Aroclor-1242	1000 ug/mL
							PCB-1268	1000 ug/mL
SG4268@1.5PPM_00001	10/26/17	04/27/17	HEXANE, Lot 0000160062	50 mL	SG42/6810PPM_00005	7.5 mL	PCB-1242 Peak 1	1500 ug/L
							PCB-1242 Peak 2	1500 ug/L
							PCB-1242 Peak 3	1500 ug/L
							PCB-1242 Peak 4	1500 ug/L
							PCB-1242 Peak 5	1500 ug/L
							PCB-1268 Peak 1	1500 ug/L
							PCB-1268 Peak 2	1500 ug/L
							PCB-1268 Peak 3	1500 ug/L
							PCB-1268 Peak 4	1500 ug/L
							PCB-1268 Peak 5	1500 ug/L
					SGPCBIS STOCk_00008	0.25 mL	1-Bromo-2-nitrobenzene	50 ug/L

REAGENT TRACEABILITY SUMMARY

Lab Name: TestAmerica Canton Job No.: 240-81698-1

SDG No.:

Reagent ID	Exp Date	Prep Date	Dilutant Used	Reagent Final Volume	Parent Reagent		Analyte	Concentration
					Reagent ID	Volume Added		
.SG42/6810PPM_00005	04/24/18	04/24/17	HEXANE, Lot 0000159594	100 mL	SG 42/68 STK_00002	1 mL	PCB-1242 Peak 1	10000 ug/L
							PCB-1242 Peak 2	10000 ug/L
							PCB-1242 Peak 3	10000 ug/L
							PCB-1242 Peak 4	10000 ug/L
							PCB-1242 Peak 5	10000 ug/L
							PCB-1268 Peak 1	10000 ug/L
							PCB-1268 Peak 2	10000 ug/L
							PCB-1268 Peak 3	10000 ug/L
							PCB-1268 Peak 4	10000 ug/L
							PCB-1268 Peak 5	10000 ug/L
..SG 42/68 STK_00002	04/30/22		RESTEK, Lot A0116616		(Purchased Reagent)		PCB-1242 Peak 1	1000 ug/mL
							PCB-1242 Peak 2	1000 ug/mL
							PCB-1242 Peak 3	1000 ug/mL
							PCB-1242 Peak 4	1000 ug/mL
							PCB-1242 Peak 5	1000 ug/mL
							PCB-1268 Peak 1	1000 ug/mL
							PCB-1268 Peak 2	1000 ug/mL
							PCB-1268 Peak 3	1000 ug/mL
							PCB-1268 Peak 4	1000 ug/mL
							PCB-1268 Peak 5	1000 ug/mL
.SGPCBIS STOCk_00008	04/24/18	04/24/17	HEXANE, Lot 0000159594	50 mL	ISTD_00004	0.5 mL	1-Bromo-2-nitrobenzene	10 ug/mL
..ISTD_00004	04/30/20		Restek, Lot A0124315		(Purchased Reagent)		1-Bromo-2-nitrobenzene	1000 ug/mL
SGPCBISTD_00011	11/04/17	05/04/17	HEXANE, Lot 0000160062	100 mL	SGPCBIS STOCk_00008	10 mL	1-Bromo-2-nitrobenzene	1 ug/mL
.SGPCBIS STOCk_00008	04/24/18	04/24/17	HEXANE, Lot 0000159594	50 mL	ISTD_00004	0.5 mL	1-Bromo-2-nitrobenzene	10 ug/mL
..ISTD_00004	04/30/20		Restek, Lot A0124315		(Purchased Reagent)		1-Bromo-2-nitrobenzene	1000 ug/mL
vm100is_stk_00031	07/17/17	01/17/17	MEOH, Lot 127999	50 mL	vm30241_00006	2 mL	1,4-Dichlorobenzene-d4	100 ug/mL
							Chlorobenzene-d5	100 ug/mL
							Fluorobenzene	100 ug/mL
.vm30241_00006	02/28/21		restek, Lot A0117358		(Purchased Reagent)		1,4-Dichlorobenzene-d4	2500 ug/mL
							Chlorobenzene-d5	2500 ug/mL
							Fluorobenzene	2500 ug/mL
vm100is_stk_00033	11/24/17	05/24/17	MEOH, Lot 127999	50 mL	vm30241_00006	2 mL	1,4-Dichlorobenzene-d4	100 ug/mL
							Chlorobenzene-d5	100 ug/mL
							Fluorobenzene	100 ug/mL
.vm30241_00006	02/28/21		restek, Lot A0117358		(Purchased Reagent)		1,4-Dichlorobenzene-d4	2500 ug/mL
							Chlorobenzene-d5	2500 ug/mL
							Fluorobenzene	2500 ug/mL
vm100ss_stk_00025	09/14/17	03/14/17	MEOH, Lot 127999	100 mL	VM567650_00025	4 mL	1,2-Dichloroethane-d4 (Surr)	100 ug/mL
							4-Bromofluorobenzene (Surr)	100 ug/mL
							Dibromofluoromethane (Surr)	100 ug/mL
							Toluene-d8 (Surr)	100 ug/mL
.VM567650_00025	10/31/20		Restek, Lot A0114901		(Purchased Reagent)		1,2-Dichloroethane-d4 (Surr)	2500 ug/mL
							4-Bromofluorobenzene (Surr)	2500 ug/mL
							Dibromofluoromethane (Surr)	2500 ug/mL
							Toluene-d8 (Surr)	2500 ug/mL
vm100ss_stk_00026	12/16/17	06/16/17	MEOH, Lot 147462	100 mL	VM567650_00027	4 mL	1,2-Dichloroethane-d4 (Surr)	100 ug/mL

REAGENT TRACEABILITY SUMMARY

Lab Name: TestAmerica Canton Job No.: 240-81698-1

SDG No.:

Reagent ID	Exp Date	Prep Date	Dilutant Used	Reagent Final Volume	Parent Reagent		Analyte	Concentration
					Reagent ID	Volume Added		
							4-Bromofluorobenzene (Surr)	100 ug/mL
							Dibromofluoromethane (Surr)	100 ug/mL
							Toluene-d8 (Surr)	100 ug/mL
.VM567650_00027	07/31/21	Restek, Lot A0120212			(Purchased Reagent)		1,2-Dichloroethane-d4 (Surr)	2500 ug/mL
							4-Bromofluorobenzene (Surr)	2500 ug/mL
							Dibromofluoromethane (Surr)	2500 ug/mL
							Toluene-d8 (Surr)	2500 ug/mL
VM250-IS_00037	10/07/17	04/07/17	MEOH, Lot +173000000127999JM	100 mL	vmcus8126_00009	1 mL	1,4-Dichlorobenzene-d4	250 ug/mL
							Chlorobenzene-d5	250 ug/mL
							Fluorobenzene	250 ug/mL
.vmcus8126_00009	01/31/18	Ultra Scientific, Lot CM-6298			(Purchased Reagent)		1,4-Dichlorobenzene-d4	25000 ug/mL
							Chlorobenzene-d5	25000 ug/mL
							Fluorobenzene	25000 ug/mL
vm50ss_00278	03/31/17	03/24/17	MEOH, Lot na	4 mL	vm50ss_stk_00072	4 mL	1,2-Dichloroethane-d4 (Surr)	50 ug/mL
							4-Bromofluorobenzene (Surr)	50 ug/mL
							Dibromofluoromethane (Surr)	50 ug/mL
							Toluene-d8 (Surr)	50 ug/mL
.vm50ss_stk_00072	06/07/17	12/07/16	MEOH, Lot 0000136118	200 mL	VM567650_00024	4 mL	1,2-Dichloroethane-d4 (Surr)	50 ug/mL
							4-Bromofluorobenzene (Surr)	50 ug/mL
							Dibromofluoromethane (Surr)	50 ug/mL
							Toluene-d8 (Surr)	50 ug/mL
..VM567650_00024	07/31/20	Restek, Lot A0112455			(Purchased Reagent)		1,2-Dichloroethane-d4 (Surr)	2500 ug/mL
							4-Bromofluorobenzene (Surr)	2500 ug/mL
							Dibromofluoromethane (Surr)	2500 ug/mL
							Toluene-d8 (Surr)	2500 ug/mL
vm50ss_00288	07/05/17	06/28/17	MEOH, Lot na	4 mL	vm50ss_stk_00074	4 mL	1,2-Dichloroethane-d4 (Surr)	50 ug/mL
							4-Bromofluorobenzene (Surr)	50 ug/mL
							Dibromofluoromethane (Surr)	50 ug/mL
							Toluene-d8 (Surr)	50 ug/mL
.vm50ss_stk_00074	12/15/17	06/15/17	MEOH, Lot 0000136118	200 mL	VM567650_00024	4 mL	1,2-Dichloroethane-d4 (Surr)	50 ug/mL
							4-Bromofluorobenzene (Surr)	50 ug/mL
							Dibromofluoromethane (Surr)	50 ug/mL
							Toluene-d8 (Surr)	50 ug/mL
..VM567650_00024	07/31/20	Restek, Lot A0112455			(Purchased Reagent)		1,2-Dichloroethane-d4 (Surr)	2500 ug/mL
							4-Bromofluorobenzene (Surr)	2500 ug/mL
							Dibromofluoromethane (Surr)	2500 ug/mL
							Toluene-d8 (Surr)	2500 ug/mL
vmarolistdw_00190	03/31/17	03/27/17	MEOH, Lot na	4 mL	VMACROLSTD_00046	4 mL	Acrolein	250 ug/mL
.VMACROLSTD_00046	03/31/17	03/01/17	MEOH, Lot 0000127999	20 mL	VM568720_00018	250 uL	Acrolein	250 ug/mL
..VM568720_00018	03/31/17	restek, Lot A0122668			(Purchased Reagent)		Acrolein	20000 ug/mL
VMAROLISTDW_00205	07/08/17	07/01/17	MEOH, Lot na	4 mL	VMACROLSTD_00051	4 mL	Acrolein	250 ug/mL
.VMACROLSTD_00051	07/31/17	07/01/17	MEOH, Lot 0000147462	20 mL	VM568720_00020	250 uL	Acrolein	250 ug/mL
..VM568720_00020	07/31/17	restek, Lot A0124374			(Purchased Reagent)		Acrolein	20000 ug/mL
VMFASA9W_00135	04/04/17	03/28/17	MEOH, Lot NA	4 mL	VMFASA9_00009	4 mL	1,2,3-Trimethylbenzene	50 ug/mL
							Diisopropyl ether	50 ug/mL

REAGENT TRACEABILITY SUMMARY

Lab Name: TestAmerica Canton Job No.: 240-81698-1

SDG No.:

Reagent ID	Exp Date	Prep Date	Dilutant Used	Reagent Final Volume	Parent Reagent		Analyte	Concentration
					Reagent ID	Volume Added		
							Ethyl t-butyl ether	50 ug/mL
							Tert-amyl methyl ether	50 ug/mL
.VMFASA9_00009	06/30/17	03/02/17	MEOH, Lot 0000127999	100 mL	VM570808S_00001	2 mL	1,2,3-Trimethylbenzene	50 ug/mL
					VM571993S_00002	2 mL	Diisopropyl ether	50 ug/mL
							Ethyl t-butyl ether	50 ug/mL
							Tert-amyl methyl ether	50 ug/mL
..VM570808S_00001	06/30/17		Restek, Lot A0116135		(Purchased Reagent)		1,2,3-Trimethylbenzene	2500 ug/mL
..VM571993S_00002	12/31/18		restek, Lot A0123771		(Purchased Reagent)		Diisopropyl ether	2500 ug/mL
							Ethyl t-butyl ether	2500 ug/mL
							Tert-amyl methyl ether	2500 ug/mL
VMFASA9W_00147	07/08/17	07/01/17	MEOH, Lot NA	4 mL	VMFASA9_00010	4 mL	1,2,3-Trimethylbenzene	50 ug/mL
							Diisopropyl ether	50 ug/mL
							Ethyl t-butyl ether	50 ug/mL
							Tert-amyl methyl ether	50 ug/mL
.VMFASA9_00010	10/31/17	07/01/17	MEOH, Lot 0000147462	100 mL	VM570808S_00003	2 mL	1,2,3-Trimethylbenzene	50 ug/mL
					VM571993S_00002	2 mL	Diisopropyl ether	50 ug/mL
							Ethyl t-butyl ether	50 ug/mL
							Tert-amyl methyl ether	50 ug/mL
..VM570808S_00003	10/31/17		Restek, Lot A0118725		(Purchased Reagent)		1,2,3-Trimethylbenzene	2500 ug/mL
..VM571993S_00002	12/31/18		restek, Lot A0123771		(Purchased Reagent)		Diisopropyl ether	2500 ug/mL
							Ethyl t-butyl ether	2500 ug/mL
							Tert-amyl methyl ether	2500 ug/mL
VMFASGW_00201	04/03/17	03/27/17	MEOH, Lot NA	4 mL	VMFASG_00056	4 mL	Bromomethane	50 ug/mL
							Chloroethane	50 ug/mL
							Chloromethane	50 ug/mL
							Dichlorodifluoromethane	50 ug/mL
							Trichlorofluoromethane	50 ug/mL
							Vinyl chloride	50 ug/mL
.VMFASG_00056	04/22/17	03/22/17	MEOH, Lot 0000127999	50 mL	vm569722S_00002	1 mL	Bromomethane	50 ug/mL
							Chloroethane	50 ug/mL
							Chloromethane	50 ug/mL
							Dichlorodifluoromethane	50 ug/mL
							Trichlorofluoromethane	50 ug/mL
							Vinyl chloride	50 ug/mL
..vm569722S_00002	05/31/18		Restek, Lot A0111273		(Purchased Reagent)		Bromomethane	2500 ug/mL
							Chloroethane	2500 ug/mL
							Chloromethane	2500 ug/mL
							Dichlorodifluoromethane	2500 ug/mL
							Trichlorofluoromethane	2500 ug/mL
							Vinyl chloride	2500 ug/mL
VMFASGW_00216	07/08/17	07/01/17	MEOH, Lot NA	4 mL	VMFASG_00060	4 mL	Bromomethane	50 ug/mL
							Chloroethane	50 ug/mL
							Chloromethane	50 ug/mL
							Dichlorodifluoromethane	50 ug/mL
							Trichlorofluoromethane	50 ug/mL
							Vinyl chloride	50 ug/mL
.VMFASG_00060	07/24/17	06/24/17	MEOH, Lot 0000147462	50 mL	vm569722S_00003	1 mL	Bromomethane	50 ug/mL

REAGENT TRACEABILITY SUMMARY

Lab Name: TestAmerica Canton Job No.: 240-81698-1

SDG No.:

Reagent ID	Exp Date	Prep Date	Dilutant Used	Reagent Final Volume	Parent Reagent		Analyte	Concentration
					Reagent ID	Volume Added		
							Chloroethane	50 ug/mL
							Chloromethane	50 ug/mL
							Dichlorodifluoromethane	50 ug/mL
							Trichlorofluoromethane	50 ug/mL
							Vinyl chloride	50 ug/mL
..vm569722S_00003	08/31/18		Restek, Lot A0113063		(Purchased Reagent)		Bromomethane	2500 ug/mL
							Chloroethane	2500 ug/mL
							Chloromethane	2500 ug/mL
							Dichlorodifluoromethane	2500 ug/mL
							Trichlorofluoromethane	2500 ug/mL
							Vinyl chloride	2500 ug/mL
VMFASPW_00196	03/29/17	03/22/17	MEOH, Lot n/a	4 mL	VMRFASP_00036	4 mL	1,1,1,2-Tetrachloroethane	50 ug/mL
							1,1,1-Trichloroethane	50 ug/mL
							1,1,2,2-Tetrachloroethane	50 ug/mL
							1,1,2-Trichloro-1,2,2-trifluor oethane	50 ug/mL
							1,1-Dichloroethane	50 ug/mL
							1,1-Dichloroethene	50 ug/mL
							1,1-Dichloropropene	50 ug/mL
							1,2,3-Trichlorobenzene	50 ug/mL
							1,2,3-Trichloropropane	50 ug/mL
							1,2,4-Trichlorobenzene	50 ug/mL
							1,2,4-Trimethylbenzene	50 ug/mL
							1,2-Dibromo-3-Chloropropane	50 ug/mL
							1,2-Dibromoethane	50 ug/mL
							1,2-Dichlorobenzene	50 ug/mL
							1,2-Dichloroethane	50 ug/mL
							1,2-Dichloropropane	50 ug/mL
							1,3-Dichlorobenzene	50 ug/mL
							1,3-Dichloropropane	50 ug/mL
							1,4-Dichlorobenzene	50 ug/mL
							2,2-Dichloropropane	50 ug/mL
							2-Chlorotoluene	50 ug/mL
							4-Chlorotoluene	50 ug/mL
							Benzene	50 ug/mL
							Bromobenzene	50 ug/mL
							Bromochloromethane	50 ug/mL
							Bromodichloromethane	50 ug/mL
							Bromoform	50 ug/mL
							Carbon disulfide	50 ug/mL
							Carbon tetrachloride	50 ug/mL
							Chlorobenzene	50 ug/mL
							Chloroform	50 ug/mL
							cis-1,2-Dichloroethene	50 ug/mL
							cis-1,3-Dichloropropene	50 ug/mL
							Dibromochloromethane	50 ug/mL
							Dibromomethane	50 ug/mL
							Ethylbenzene	50 ug/mL

REAGENT TRACEABILITY SUMMARY

Lab Name: TestAmerica Canton Job No.: 240-81698-1

SDG No.:

Reagent ID	Exp Date	Prep Date	Dilutant Used	Reagent Final Volume	Parent Reagent		Analyte	Concentration
					Reagent ID	Volume Added		
							Hexachlorobutadiene	50 ug/mL
							Isopropylbenzene	50 ug/mL
							m-Xylene & p-Xylene	50 ug/mL
							Methyl tert-butyl ether	50 ug/mL
							Methylene Chloride	50 ug/mL
							n-Butylbenzene	50 ug/mL
							N-Propylbenzene	50 ug/mL
							Naphthalene	50 ug/mL
							o-Xylene	50 ug/mL
							p-Isopropyltoluene	50 ug/mL
							sec-Butylbenzene	50 ug/mL
							Styrene	50 ug/mL
							tert-Butyl alcohol (TBA)	500 ug/mL
							tert-Butylbenzene	50 ug/mL
							Tetrachloroethene	50 ug/mL
							Toluene	50 ug/mL
							trans-1,2-Dichloroethene	50 ug/mL
							trans-1,3-Dichloropropene	50 ug/mL
							Trichloroethene	50 ug/mL
							Xylenes, Total	100 ug/mL
							2-Butanone (MEK)	100 ug/mL
							2-Hexanone	100 ug/mL
							4-Methyl-2-pentanone (MIBK)	100 ug/mL
							Acetone	100 ug/mL
							2-Chloroethyl vinyl ether	50 ug/mL
							Vinyl acetate	50 ug/mL
.VMRFASP_00036	04/30/17	01/25/17	MEOH, Lot 0000127999	100 mL	VM569720S_00004	2 mL	1,1,1,2-Tetrachloroethane	50 ug/mL
							1,1,1-Trichloroethane	50 ug/mL
							1,1,2,2-Tetrachloroethane	50 ug/mL
							1,1,2-Trichloro-1,2,2-trifluor oethane	50 ug/mL
							1,1-Dichloroethane	50 ug/mL
							1,1-Dichloroethene	50 ug/mL
							1,1-Dichloropropene	50 ug/mL
							1,2,3-Trichlorobenzene	50 ug/mL
							1,2,3-Trichloropropane	50 ug/mL
							1,2,4-Trichlorobenzene	50 ug/mL
							1,2,4-Trimethylbenzene	50 ug/mL
							1,2-Dibromo-3-Chloropropane	50 ug/mL
							1,2-Dibromoethane	50 ug/mL
							1,2-Dichlorobenzene	50 ug/mL
							1,2-Dichloroethane	50 ug/mL
							1,2-Dichloropropane	50 ug/mL
							1,3-Dichlorobenzene	50 ug/mL
							1,3-Dichloropropane	50 ug/mL
							1,4-Dichlorobenzene	50 ug/mL
							2,2-Dichloropropane	50 ug/mL
							2-Chlorotoluene	50 ug/mL

REAGENT TRACEABILITY SUMMARY

Lab Name: TestAmerica Canton Job No.: 240-81698-1

SDG No.:

Reagent ID	Exp Date	Prep Date	Dilutant Used	Reagent Final Volume	Parent Reagent		Analyte	Concentration
					Reagent ID	Volume Added		
							4-Chlorotoluene	50 ug/mL
							Benzene	50 ug/mL
							Bromobenzene	50 ug/mL
							Bromochloromethane	50 ug/mL
							Bromodichloromethane	50 ug/mL
							Bromoform	50 ug/mL
							Carbon disulfide	50 ug/mL
							Carbon tetrachloride	50 ug/mL
							Chlorobenzene	50 ug/mL
							Chloroform	50 ug/mL
							cis-1,2-Dichloroethene	50 ug/mL
							cis-1,3-Dichloropropene	50 ug/mL
							Dibromochloromethane	50 ug/mL
							Dibromomethane	50 ug/mL
							Ethylbenzene	50 ug/mL
							Hexachlorobutadiene	50 ug/mL
							Isopropylbenzene	50 ug/mL
							m-Xylene & p-Xylene	50 ug/mL
							Methyl tert-butyl ether	50 ug/mL
							Methylene Chloride	50 ug/mL
							n-Butylbenzene	50 ug/mL
							N-Propylbenzene	50 ug/mL
							Naphthalene	50 ug/mL
							o-Xylene	50 ug/mL
							p-Isopropyltoluene	50 ug/mL
							sec-Butylbenzene	50 ug/mL
							Styrene	50 ug/mL
							tert-Butyl alcohol (TBA)	500 ug/mL
							tert-Butylbenzene	50 ug/mL
							Tetrachloroethene	50 ug/mL
							Toluene	50 ug/mL
							trans-1,2-Dichloroethene	50 ug/mL
							trans-1,3-Dichloropropene	50 ug/mL
							Trichloroethene	50 ug/mL
							Xylenes, Total	100 ug/mL
					VM569721S_00001	0.8 mL	2-Butanone (MEK)	100 ug/mL
							2-Hexanone	100 ug/mL
							4-Methyl-2-pentanone (MIBK)	100 ug/mL
							Acetone	100 ug/mL
					VM569723S_00004	2 mL	2-Chloroethyl vinyl ether	50 ug/mL
					VM569724S_00010	1 mL	Vinyl acetate	50 ug/mL
..VM569720S_00004	07/31/18		Restek, Lot A0120604		(Purchased Reagent)		1,1,1,2-Tetrachloroethane	2500 ug/mL
							1,1,1-Trichloroethane	2500 ug/mL
							1,1,2,2-Tetrachloroethane	2500 ug/mL
							1,1,2-Trichloro-1,2,2-trifluor oethane	2500 ug/mL
							1,1-Dichloroethane	2500 ug/mL
							1,1-Dichloroethene	2500 ug/mL

REAGENT TRACEABILITY SUMMARY

Lab Name: TestAmerica Canton Job No.: 240-81698-1

SDG No.:

Reagent ID	Exp Date	Prep Date	Dilutant Used	Reagent Final Volume	Parent Reagent		Analyte	Concentration
					Reagent ID	Volume Added		
							1,1-Dichloropropene	2500 ug/mL
							1,2,3-Trichlorobenzene	2500 ug/mL
							1,2,3-Trichloropropane	2500 ug/mL
							1,2,4-Trichlorobenzene	2500 ug/mL
							1,2,4-Trimethylbenzene	2500 ug/mL
							1,2-Dibromo-3-Chloropropane	2500 ug/mL
							1,2-Dibromoethane	2500 ug/mL
							1,2-Dichlorobenzene	2500 ug/mL
							1,2-Dichloroethane	2500 ug/mL
							1,2-Dichloropropane	2500 ug/mL
							1,3-Dichlorobenzene	2500 ug/mL
							1,3-Dichloropropane	2500 ug/mL
							1,4-Dichlorobenzene	2500 ug/mL
							2,2-Dichloropropane	2500 ug/mL
							2-Chlorotoluene	2500 ug/mL
							4-Chlorotoluene	2500 ug/mL
							Benzene	2500 ug/mL
							Bromobenzene	2500 ug/mL
							Bromochloromethane	2500 ug/mL
							Bromodichloromethane	2500 ug/mL
							Bromoform	2500 ug/mL
							Carbon disulfide	2500 ug/mL
							Carbon tetrachloride	2500 ug/mL
							Chlorobenzene	2500 ug/mL
							Chloroform	2500 ug/mL
							cis-1,2-Dichloroethene	2500 ug/mL
							cis-1,3-Dichloropropene	2500 ug/mL
							Dibromochloromethane	2500 ug/mL
							Dibromomethane	2500 ug/mL
							Ethylbenzene	2500 ug/mL
							Hexachlorobutadiene	2500 ug/mL
							Isopropylbenzene	2500 ug/mL
							m-Xylene & p-Xylene	2500 ug/mL
							Methyl tert-butyl ether	2500 ug/mL
							Methylene Chloride	2500 ug/mL
							n-Butylbenzene	2500 ug/mL
							N-Propylbenzene	2500 ug/mL
							Naphthalene	2500 ug/mL
							o-Xylene	2500 ug/mL
							p-Isopropyltoluene	2500 ug/mL
							sec-Butylbenzene	2500 ug/mL
							Styrene	2500 ug/mL
							tert-Butyl alcohol (TBA)	25000 ug/mL
							tert-Butylbenzene	2500 ug/mL
							Tetrachloroethene	2500 ug/mL
							Toluene	2500 ug/mL
							trans-1,2-Dichloroethene	2500 ug/mL
							trans-1,3-Dichloropropene	2500 ug/mL

REAGENT TRACEABILITY SUMMARY

Lab Name: TestAmerica Canton Job No.: 240-81698-1

SDG No.:

Reagent ID	Exp Date	Prep Date	Dilutant Used	Reagent Final Volume	Parent Reagent		Analyte	Concentration
					Reagent ID	Volume Added		
							Trichloroethene	2500 ug/mL
							Xylenes, Total	5000 ug/mL
..VM569721S_00001	01/31/18		Restek, Lot A0108157		(Purchased Reagent)		2-Butanone (MEK)	12500 ug/mL
							2-Hexanone	12500 ug/mL
							4-Methyl-2-pentanone (MIBK)	12500 ug/mL
							Acetone	12500 ug/mL
..VM569723S_00004	07/31/18		Restek, Lot A0112291		(Purchased Reagent)		2-Chloroethyl vinyl ether	2500 ug/mL
..VM569724S_00010	04/30/17		Restek, Lot A0122475		(Purchased Reagent)		Vinyl acetate	5000 ug/mL
VMFASPW_00209	07/08/17	07/01/17	MEOH, Lot n/a	4 mL	VMRFASP_00039	4 mL	2-Butanone (MEK)	100 ug/mL
							2-Hexanone	100 ug/mL
							4-Methyl-2-pentanone (MIBK)	100 ug/mL
							Acetone	100 ug/mL
							2-Chloroethyl vinyl ether	50 ug/mL
							Vinyl acetate	50 ug/mL
							1,1,1,2-Tetrachloroethane	50 ug/mL
							1,1,1-Trichloroethane	50 ug/mL
							1,1,2,2-Tetrachloroethane	50 ug/mL
							1,1,2-Trichloro-1,2,2-trifluor oethane	50 ug/mL
							1,1-Dichloroethane	50 ug/mL
							1,1-Dichloroethene	50 ug/mL
							1,1-Dichloropropene	50 ug/mL
							1,2,3-Trichlorobenzene	50 ug/mL
							1,2,3-Trichloropropane	50 ug/mL
							1,2,4-Trichlorobenzene	50 ug/mL
							1,2,4-Trimethylbenzene	50 ug/mL
							1,2-Dibromo-3-Chloropropane	50 ug/mL
							1,2-Dibromoethane	50 ug/mL
							1,2-Dichlorobenzene	50 ug/mL
							1,2-Dichloroethane	50 ug/mL
							1,2-Dichloropropane	50 ug/mL
							1,3-Dichlorobenzene	50 ug/mL
							1,3-Dichloropropane	50 ug/mL
							1,4-Dichlorobenzene	50 ug/mL
							2,2-Dichloropropane	50 ug/mL
							2-Chlorotoluene	50 ug/mL
							4-Chlorotoluene	50 ug/mL
							Benzene	50 ug/mL
							Bromobenzene	50 ug/mL
							Bromochloromethane	50 ug/mL
							Bromodichloromethane	50 ug/mL
							Bromoform	50 ug/mL
							Carbon disulfide	50 ug/mL
							Carbon tetrachloride	50 ug/mL
							Chlorobenzene	50 ug/mL
							Chloroform	50 ug/mL
							cis-1,2-Dichloroethene	50 ug/mL
							cis-1,3-Dichloropropene	50 ug/mL

REAGENT TRACEABILITY SUMMARY

Lab Name: TestAmerica Canton Job No.: 240-81698-1

SDG No.:

Reagent ID	Exp Date	Prep Date	Dilutant Used	Reagent Final Volume	Parent Reagent		Analyte	Concentration
					Reagent ID	Volume Added		
							Dibromochloromethane	50 ug/mL
							Dibromomethane	50 ug/mL
							Ethylbenzene	50 ug/mL
							Hexachlorobutadiene	50 ug/mL
							Isopropylbenzene	50 ug/mL
							m-Xylene & p-Xylene	50 ug/mL
							Methyl tert-butyl ether	50 ug/mL
							Methylene Chloride	50 ug/mL
							n-Butylbenzene	50 ug/mL
							N-Propylbenzene	50 ug/mL
							Naphthalene	50 ug/mL
							o-Xylene	50 ug/mL
							p-Isopropyltoluene	50 ug/mL
							sec-Butylbenzene	50 ug/mL
							Styrene	50 ug/mL
							tert-Butyl alcohol (TBA)	500 ug/mL
							tert-Butylbenzene	50 ug/mL
							Tetrachloroethene	50 ug/mL
							Toluene	50 ug/mL
							trans-1,2-Dichloroethene	50 ug/mL
							trans-1,3-Dichloropropene	50 ug/mL
							Trichloroethene	50 ug/mL
							Xylenes, Total	100 ug/mL
.VMRFASP_00039	07/31/17	06/15/17	MEOH, Lot 0000147462	100 mL	VM569721S_00001	0.8 mL	2-Butanone (MEK)	100 ug/mL
							2-Hexanone	100 ug/mL
							4-Methyl-2-pentanone (MIBK)	100 ug/mL
							Acetone	100 ug/mL
					VM569723S_00004	2 mL	2-Chloroethyl vinyl ether	50 ug/mL
					VM569724S_00012	1 mL	Vinyl acetate	50 ug/mL
					VM571992S_00001	2 mL	1,1,1,2-Tetrachloroethane	50 ug/mL
							1,1,1-Trichloroethane	50 ug/mL
							1,1,2,2-Tetrachloroethane	50 ug/mL
							1,1,2-Trichloro-1,2,2-trifluor oethane	50 ug/mL
							1,1-Dichloroethane	50 ug/mL
							1,1-Dichloroethene	50 ug/mL
							1,1-Dichloropropene	50 ug/mL
							1,2,3-Trichlorobenzene	50 ug/mL
							1,2,3-Trichloropropane	50 ug/mL
							1,2,4-Trichlorobenzene	50 ug/mL
							1,2,4-Trimethylbenzene	50 ug/mL
							1,2-Dibromo-3-Chloropropane	50 ug/mL
							1,2-Dibromoethane	50 ug/mL
							1,2-Dichlorobenzene	50 ug/mL
							1,2-Dichloroethane	50 ug/mL
							1,2-Dichloropropane	50 ug/mL
							1,3-Dichlorobenzene	50 ug/mL
							1,3-Dichloropropane	50 ug/mL

REAGENT TRACEABILITY SUMMARY

Lab Name: TestAmerica Canton Job No.: 240-81698-1

SDG No.:

Reagent ID	Exp Date	Prep Date	Dilutant Used	Reagent Final Volume	Parent Reagent		Analyte	Concentration
					Reagent ID	Volume Added		
							1,4-Dichlorobenzene	50 ug/mL
							2,2-Dichloropropane	50 ug/mL
							2-Chlorotoluene	50 ug/mL
							4-Chlorotoluene	50 ug/mL
							Benzene	50 ug/mL
							Bromobenzene	50 ug/mL
							Bromochloromethane	50 ug/mL
							Bromodichloromethane	50 ug/mL
							Bromoform	50 ug/mL
							Carbon disulfide	50 ug/mL
							Carbon tetrachloride	50 ug/mL
							Chlorobenzene	50 ug/mL
							Chloroform	50 ug/mL
							cis-1,2-Dichloroethene	50 ug/mL
							cis-1,3-Dichloropropene	50 ug/mL
							Dibromochloromethane	50 ug/mL
							Dibromomethane	50 ug/mL
							Ethylbenzene	50 ug/mL
							Hexachlorobutadiene	50 ug/mL
							Isopropylbenzene	50 ug/mL
							m-Xylene & p-Xylene	50 ug/mL
							Methyl tert-butyl ether	50 ug/mL
							Methylene Chloride	50 ug/mL
							n-Butylbenzene	50 ug/mL
							N-Propylbenzene	50 ug/mL
							Naphthalene	50 ug/mL
							o-Xylene	50 ug/mL
							p-Isopropyltoluene	50 ug/mL
							sec-Butylbenzene	50 ug/mL
							Styrene	50 ug/mL
							tert-Butyl alcohol (TBA)	500 ug/mL
							tert-Butylbenzene	50 ug/mL
							Tetrachloroethene	50 ug/mL
							Toluene	50 ug/mL
							trans-1,2-Dichloroethene	50 ug/mL
							trans-1,3-Dichloropropene	50 ug/mL
							Trichloroethene	50 ug/mL
							Xylenes, Total	100 ug/mL
..VM569721S_00001	01/31/18		Restek, Lot A0108157		(Purchased Reagent)		2-Butanone (MEK)	12500 ug/mL
							2-Hexanone	12500 ug/mL
							4-Methyl-2-pentanone (MIBK)	12500 ug/mL
							Acetone	12500 ug/mL
..VM569723S_00004	07/31/18		Restek, Lot A0112291		(Purchased Reagent)		2-Chloroethyl vinyl ether	2500 ug/mL
..VM569724S_00012	07/31/17		Restek, Lot A0124531		(Purchased Reagent)		Vinyl acetate	5000 ug/mL
..VM571992S_00001	12/31/18		Restek, Lot A0123775		(Purchased Reagent)		1,1,1,2-Tetrachloroethane	2500 ug/mL
							1,1,1-Trichloroethane	2500 ug/mL
							1,1,2,2-Tetrachloroethane	2500 ug/mL

REAGENT TRACEABILITY SUMMARY

Lab Name: TestAmerica Canton Job No.: 240-81698-1

SDG No.:

Reagent ID	Exp Date	Prep Date	Dilutant Used	Reagent Final Volume	Parent Reagent		Analyte	Concentration
					Reagent ID	Volume Added		
							1,1,2-Trichloro-1,2,2-trifluoroethane	2500 ug/mL
							1,1-Dichloroethane	2500 ug/mL
							1,1-Dichloroethene	2500 ug/mL
							1,1-Dichloropropene	2500 ug/mL
							1,2,3-Trichlorobenzene	2500 ug/mL
							1,2,3-Trichloropropane	2500 ug/mL
							1,2,4-Trichlorobenzene	2500 ug/mL
							1,2,4-Trimethylbenzene	2500 ug/mL
							1,2-Dibromo-3-Chloropropane	2500 ug/mL
							1,2-Dibromoethane	2500 ug/mL
							1,2-Dichlorobenzene	2500 ug/mL
							1,2-Dichloroethane	2500 ug/mL
							1,2-Dichloropropane	2500 ug/mL
							1,3-Dichlorobenzene	2500 ug/mL
							1,3-Dichloropropane	2500 ug/mL
							1,4-Dichlorobenzene	2500 ug/mL
							2,2-Dichloropropane	2500 ug/mL
							2-Chlorotoluene	2500 ug/mL
							4-Chlorotoluene	2500 ug/mL
							Benzene	2500 ug/mL
							Bromobenzene	2500 ug/mL
							Bromochloromethane	2500 ug/mL
							Bromodichloromethane	2500 ug/mL
							Bromoform	2500 ug/mL
							Carbon disulfide	2500 ug/mL
							Carbon tetrachloride	2500 ug/mL
							Chlorobenzene	2500 ug/mL
							Chloroform	2500 ug/mL
							cis-1,2-Dichloroethene	2500 ug/mL
							cis-1,3-Dichloropropene	2500 ug/mL
							Dibromochloromethane	2500 ug/mL
							Dibromomethane	2500 ug/mL
							Ethylbenzene	2500 ug/mL
							Hexachlorobutadiene	2500 ug/mL
							Isopropylbenzene	2500 ug/mL
							m-Xylene & p-Xylene	2500 ug/mL
							Methyl tert-butyl ether	2500 ug/mL
							Methylene Chloride	2500 ug/mL
							n-Butylbenzene	2500 ug/mL
							N-Propylbenzene	2500 ug/mL
							Naphthalene	2500 ug/mL
							o-Xylene	2500 ug/mL
							p-Isopropyltoluene	2500 ug/mL
							sec-Butylbenzene	2500 ug/mL
							Styrene	2500 ug/mL
							tert-Butyl alcohol (TBA)	25000 ug/mL
							tert-Butylbenzene	2500 ug/mL

REAGENT TRACEABILITY SUMMARY

Lab Name: TestAmerica Canton Job No.: 240-81698-1

SDG No.:

Reagent ID	Exp Date	Prep Date	Dilutant Used	Reagent Final Volume	Parent Reagent		Analyte	Concentration
					Reagent ID	Volume Added		
							Tetrachloroethene	2500 ug/mL
							Toluene	2500 ug/mL
							trans-1,2-Dichloroethene	2500 ug/mL
							trans-1,3-Dichloropropene	2500 ug/mL
							Trichloroethene	2500 ug/mL
							Xylenes, Total	5000 ug/mL
vmra9w_00198	03/30/17	03/23/17	MEOH, Lot NA	1 mL	VMRA9_00018	1 mL	Cyclohexanone	500 ug/mL
							Acetonitrile	500 ug/mL
							Diisopropyl ether	50 ug/mL
							Ethyl t-butyl ether	50 ug/mL
							Propionitrile	500 ug/mL
							Tert-amyl methyl ether	50 ug/mL
							Pentachloroethane	100 ug/mL
							2-Methylnaphthalene	100 ug/mL
							1,2,3-Trimethylbenzene	50 ug/mL
							1,3,5-Trichlorobenzene	50 ug/mL
							1-Chlorohexane	50 ug/mL
							2-Chloro-1,3-butadiene	50 ug/mL
							2-Nitropropane	100 ug/mL
							Benzyl chloride	50 ug/mL
							Methacrylonitrile	500 ug/mL
							n-Butanol	1250 ug/mL
							Ethyl acetate	100 ug/mL
							Ethyl acrylate	50 ug/mL
							Methyl methacrylate	100 ug/mL
							n-Butyl acetate	50 ug/mL
.VMRA9_00018	04/30/17	12/31/16	MEOH, Lot 00000127999	50 mL	VM569727_00001	1 mL	Cyclohexanone	500 ug/mL
					VM569728_00001	1 mL	Acetonitrile	500 ug/mL
							Diisopropyl ether	50 ug/mL
							Ethyl t-butyl ether	50 ug/mL
							Propionitrile	500 ug/mL
							Tert-amyl methyl ether	50 ug/mL
					vm570806_00001	2 mL	Pentachloroethane	100 ug/mL
					vm570807_00001	2 mL	2-Methylnaphthalene	100 ug/mL
					VM570808_00001	1 mL	1,2,3-Trimethylbenzene	50 ug/mL
							1,3,5-Trichlorobenzene	50 ug/mL
							1-Chlorohexane	50 ug/mL
							2-Chloro-1,3-butadiene	50 ug/mL
							2-Nitropropane	100 ug/mL
							Benzyl chloride	50 ug/mL
							Methacrylonitrile	500 ug/mL
							n-Butanol	1250 ug/mL
					VM570809_00001	1 mL	Ethyl acetate	100 ug/mL
							Ethyl acrylate	50 ug/mL
							Methyl methacrylate	100 ug/mL
							n-Butyl acetate	50 ug/mL
..VM569727_00001	04/30/18	RESTEK, Lot A0110092			(Purchased Reagent)		Cyclohexanone	25000 ug/mL

REAGENT TRACEABILITY SUMMARY

Lab Name: TestAmerica Canton Job No.: 240-81698-1

SDG No.:

Reagent ID	Exp Date	Prep Date	Dilutant Used	Reagent Final Volume	Parent Reagent		Analyte	Concentration
					Reagent ID	Volume Added		
..VM569728_00001	04/30/17		restek, Lot A0110540		(Purchased Reagent)		Acetonitrile	25000 ug/mL
							Diisopropyl ether	2500 ug/mL
							Ethyl t-butyl ether	2500 ug/mL
							Propionitrile	25000 ug/mL
							Tert-amyl methyl ether	2500 ug/mL
..vm570806_00001	12/31/17		Restek, Lot A0116076		(Purchased Reagent)		Pentachloroethane	2500 ug/mL
..vm570807_00001	12/31/17		Restek, Lot A0116084		(Purchased Reagent)		2-Methylnaphthalene	2500 ug/mL
..VM570808_00001	06/30/17		Restek, Lot A0116133		(Purchased Reagent)		1,2,3-Trimethylbenzene	2500 ug/mL
							1,3,5-Trichlorobenzene	2500 ug/mL
							1-Chlorohexane	2500 ug/mL
							2-Chloro-1,3-butadiene	2500 ug/mL
							2-Nitropropane	5000 ug/mL
							Benzyl chloride	2500 ug/mL
							Methacrylonitrile	25000 ug/mL
							n-Butanol	62500 ug/mL
..VM570809_00001	06/30/17		Restek, Lot A0116077		(Purchased Reagent)		Ethyl acetate	5000 ug/mL
							Ethyl acrylate	2500 ug/mL
							Methyl methacrylate	5000 ug/mL
							n-Butyl acetate	2500 ug/mL
VMRA9W_00211	07/08/17	07/01/17	MEOH, Lot NA	1 mL	VMRA9_00020	1 mL	Cyclohexanone	500 ug/mL
							Pentachloroethane	100 ug/mL
							2-Methylnaphthalene	100 ug/mL
							1,2,3-Trimethylbenzene	50 ug/mL
							1,3,5-Trichlorobenzene	50 ug/mL
							1-Chlorohexane	50 ug/mL
							2-Chloro-1,3-butadiene	50 ug/mL
							2-Nitropropane	100 ug/mL
							Benzyl chloride	50 ug/mL
							Methacrylonitrile	500 ug/mL
							n-Butanol	1250 ug/mL
							Ethyl acetate	100 ug/mL
							Ethyl acrylate	50 ug/mL
							Methyl methacrylate	100 ug/mL
							n-Butyl acetate	50 ug/mL
							Acetonitrile	500 ug/mL
							Diisopropyl ether	50 ug/mL
							Ethyl t-butyl ether	50 ug/mL
							Propionitrile	500 ug/mL
							Tert-amyl methyl ether	50 ug/mL
.VMRA9_00020	12/30/17	06/30/17	MEOH, Lot 00000147462	50 mL	VM569727_00001	1 mL	Cyclohexanone	500 ug/mL
					vm570806_00001	2 mL	Pentachloroethane	100 ug/mL
					vm570807_00001	2 mL	2-Methylnaphthalene	100 ug/mL
					VM570808_00003	1 mL	1,2,3-Trimethylbenzene	50 ug/mL
							1,3,5-Trichlorobenzene	50 ug/mL
							1-Chlorohexane	50 ug/mL
							2-Chloro-1,3-butadiene	50 ug/mL
							2-Nitropropane	100 ug/mL

REAGENT TRACEABILITY SUMMARY

Lab Name: TestAmerica Canton Job No.: 240-81698-1

SDG No.:

Reagent ID	Exp Date	Prep Date	Dilutant Used	Reagent Final Volume	Parent Reagent		Analyte	Concentration
					Reagent ID	Volume Added		
							Benzyl chloride	50 ug/mL
							Methacrylonitrile	500 ug/mL
							n-Butanol	1250 ug/mL
					VM570809_00003	1 mL	Ethyl acetate	100 ug/mL
							Ethyl acrylate	50 ug/mL
							Methyl methacrylate	100 ug/mL
							n-Butyl acetate	50 ug/mL
					VM571993_00001	1 mL	Acetonitrile	500 ug/mL
							Diisopropyl ether	50 ug/mL
							Ethyl t-butyl ether	50 ug/mL
							Propionitrile	500 ug/mL
							Tert-amyl methyl ether	50 ug/mL
..VM569727_00001	04/30/18		RESTEK, Lot A0110092		(Purchased Reagent)		Cyclohexanone	25000 ug/mL
..vm570806_00001	12/31/17		Restek, Lot A0116076		(Purchased Reagent)		Pentachloroethane	2500 ug/mL
..vm570807_00001	12/31/17		Restek, Lot A0116084		(Purchased Reagent)		2-Methylnaphthalene	2500 ug/mL
..VM570808_00003	06/30/18		Restek, Lot A0123685		(Purchased Reagent)		1,2,3-Trimethylbenzene	2500 ug/mL
							1,3,5-Trichlorobenzene	2500 ug/mL
							1-Chlorohexane	2500 ug/mL
							2-Chloro-1,3-butadiene	2500 ug/mL
							2-Nitropropane	5000 ug/mL
							Benzyl chloride	2500 ug/mL
							Methacrylonitrile	25000 ug/mL
							n-Butanol	62500 ug/mL
..VM570809_00003	01/31/18		Restek, Lot A0120639		(Purchased Reagent)		Ethyl acetate	5000 ug/mL
							Ethyl acrylate	2500 ug/mL
							Methyl methacrylate	5000 ug/mL
							n-Butyl acetate	2500 ug/mL
..VM571993_00001	12/31/18		restek, Lot A0123796		(Purchased Reagent)		Acetonitrile	25000 ug/mL
							Diisopropyl ether	2500 ug/mL
							Ethyl t-butyl ether	2500 ug/mL
							Propionitrile	25000 ug/mL
							Tert-amyl methyl ether	2500 ug/mL
vmrgas_00194	04/04/17	03/28/17	MEOH, Lot 0000127999	10 mL	vm569722_00007	0.2 mL	Bromomethane	50 ug/mL
							Butadiene	50 ug/mL
							Chloroethane	50 ug/mL
							Chloromethane	50 ug/mL
							Dichlorodifluoromethane	50 ug/mL
							Dichlorofluoromethane	50 ug/mL
							Trichlorofluoromethane	50 ug/mL
							Vinyl chloride	50 ug/mL
.vm569722_00007	10/31/18		Restek, Lot A0115012		(Purchased Reagent)		Bromomethane	2500 ug/mL
							Butadiene	2500 ug/mL
							Chloroethane	2500 ug/mL
							Chloromethane	2500 ug/mL
							Dichlorodifluoromethane	2500 ug/mL
							Dichlorofluoromethane	2500 ug/mL
							Trichlorofluoromethane	2500 ug/mL

REAGENT TRACEABILITY SUMMARY

Lab Name: TestAmerica Canton Job No.: 240-81698-1

SDG No.:

Reagent ID	Exp Date	Prep Date	Dilutant Used	Reagent Final Volume	Parent Reagent		Analyte	Concentration
					Reagent ID	Volume Added		
							Vinyl chloride	2500 ug/mL
VMRGAS_00206	07/08/17	07/01/17	MEOH, Lot 0000147462	10 mL	vm569722_00008	0.2 mL	Bromomethane	50 ug/mL
							Butadiene	50 ug/mL
							Chloroethane	50 ug/mL
							Chloromethane	50 ug/mL
							Dichlorodifluoromethane	50 ug/mL
							Dichlorofluoromethane	50 ug/mL
							Trichlorofluoromethane	50 ug/mL
							Vinyl chloride	50 ug/mL
.vm569722_00008	04/30/19		Restek, Lot A0118719		(Purchased Reagent)		Bromomethane	2500 ug/mL
							Butadiene	2500 ug/mL
							Chloroethane	2500 ug/mL
							Chloromethane	2500 ug/mL
							Dichlorodifluoromethane	2500 ug/mL
							Dichlorofluoromethane	2500 ug/mL
							Trichlorofluoromethane	2500 ug/mL
							Vinyl chloride	2500 ug/mL
vmrprimw_00229	03/29/17	03/22/17	MEOH, Lot NA	4 mL	VMRPRIM_00021	4 mL	1,1,1,2-Tetrachloroethane	50 ug/mL
							1,1,1-Trichloroethane	50 ug/mL
							1,1,2,2-Tetrachloroethane	50 ug/mL
							1,1,2-Trichloro-1,2,2-trifluoroethane	50 ug/mL
							1,1,2-Trichloroethane	50 ug/mL
							1,1-Dichloroethane	50 ug/mL
							1,1-Dichloroethene	50 ug/mL
							1,1-Dichloropropene	50 ug/mL
							1,2,3-Trichlorobenzene	50 ug/mL
							1,2,3-Trichloropropane	50 ug/mL
							1,2,4-Trichlorobenzene	50 ug/mL
							1,2,4-Trimethylbenzene	50 ug/mL
							1,2-Dibromo-3-Chloropropane	50 ug/mL
							1,2-Dibromoethane	50 ug/mL
							1,2-Dichlorobenzene	50 ug/mL
							1,2-Dichloroethane	50 ug/mL
							1,2-Dichloropropane	50 ug/mL
							1,3,5-Trimethylbenzene	50 ug/mL
							1,3-Dichlorobenzene	50 ug/mL
							1,3-Dichloropropane	50 ug/mL
							1,4-Dichlorobenzene	50 ug/mL
							1,4-Dioxane	1000 ug/mL
							2,2-Dichloropropane	50 ug/mL
							2-Chlorotoluene	50 ug/mL
							3-Chloro-1-propene	50 ug/mL
							4-Chlorotoluene	50 ug/mL
							Acrylonitrile	500 ug/mL
							Benzene	50 ug/mL
							Bromobenzene	50 ug/mL

REAGENT TRACEABILITY SUMMARY

Lab Name: TestAmerica Canton Job No.: 240-81698-1

SDG No.:

Reagent ID	Exp Date	Prep Date	Dilutant Used	Reagent Final Volume	Parent Reagent		Analyte	Concentration
					Reagent ID	Volume Added		
							Bromochloromethane	50 ug/mL
							Bromodichloromethane	50 ug/mL
							Bromoform	50 ug/mL
							Carbon disulfide	50 ug/mL
							Carbon tetrachloride	50 ug/mL
							Chlorobenzene	50 ug/mL
							Chloroform	50 ug/mL
							cis-1,2-Dichloroethene	50 ug/mL
							cis-1,3-Dichloropropene	50 ug/mL
							Cyclohexane	50 ug/mL
							Dibromochloromethane	50 ug/mL
							Dibromomethane	50 ug/mL
							Ethyl ether	50 ug/mL
							Ethyl methacrylate	50 ug/mL
							Ethylbenzene	50 ug/mL
							Hexachlorobutadiene	50 ug/mL
							Hexane	50 ug/mL
							Iodomethane	50 ug/mL
							Isobutyl alcohol	1250 ug/mL
							Isopropylbenzene	50 ug/mL
							m-Xylene & p-Xylene	50 ug/mL
							Methyl acetate	250 ug/mL
							Methyl tert-butyl ether	50 ug/mL
							Methylcyclohexane	50 ug/mL
							Methylene Chloride	50 ug/mL
							n-Butylbenzene	50 ug/mL
							n-Heptane	50 ug/mL
							N-Propylbenzene	50 ug/mL
							Naphthalene	50 ug/mL
							o-Xylene	50 ug/mL
							p-Isopropyltoluene	50 ug/mL
							sec-Butylbenzene	50 ug/mL
							Styrene	50 ug/mL
							tert-Butyl alcohol (TBA)	500 ug/mL
							tert-Butylbenzene	50 ug/mL
							Tetrachloroethene	50 ug/mL
							Tetrahydrofuran	100 ug/mL
							Toluene	50 ug/mL
							trans-1,2-Dichloroethene	50 ug/mL
							trans-1,3-Dichloropropene	50 ug/mL
							trans-1,4-Dichloro-2-butene	50 ug/mL
							Trichloroethene	50 ug/mL
							2-Butanone (MEK)	100 ug/mL
							2-Hexanone	100 ug/mL
							4-Methyl-2-pentanone (MIBK)	100 ug/mL
							Acetone	100 ug/mL
							2-Chloroethyl vinyl ether	100 ug/mL
							Vinyl acetate	50 ug/mL

REAGENT TRACEABILITY SUMMARY

Lab Name: TestAmerica Canton Job No.: 240-81698-1

SDG No.:

Reagent ID	Exp Date	Prep Date	Dilutant Used	Reagent Final Volume	Parent Reagent		Analyte	Concentration
					Reagent ID	Volume Added		
.VMRPRIM_00021	05/31/17	01/31/17	MEOH, Lot 0000127999	50 mL	VM569720_00003	1 mL	1,1,1,2-Tetrachloroethane	50 ug/mL
							1,1,1-Trichloroethane	50 ug/mL
							1,1,2,2-Tetrachloroethane	50 ug/mL
							1,1,2-Trichloro-1,2,2-trifluoroethane	50 ug/mL
							1,1,2-Trichloroethane	50 ug/mL
							1,1-Dichloroethane	50 ug/mL
							1,1-Dichloroethene	50 ug/mL
							1,1-Dichloropropene	50 ug/mL
							1,2,3-Trichlorobenzene	50 ug/mL
							1,2,3-Trichloropropane	50 ug/mL
							1,2,4-Trichlorobenzene	50 ug/mL
							1,2,4-Trimethylbenzene	50 ug/mL
							1,2-Dibromo-3-Chloropropane	50 ug/mL
							1,2-Dibromoethane	50 ug/mL
							1,2-Dichlorobenzene	50 ug/mL
							1,2-Dichloroethane	50 ug/mL
							1,2-Dichloropropane	50 ug/mL
							1,3,5-Trimethylbenzene	50 ug/mL
							1,3-Dichlorobenzene	50 ug/mL
							1,3-Dichloropropane	50 ug/mL
							1,4-Dichlorobenzene	50 ug/mL
							1,4-Dioxane	1000 ug/mL
							2,2-Dichloropropane	50 ug/mL
							2-Chlorotoluene	50 ug/mL
							3-Chloro-1-propene	50 ug/mL
							4-Chlorotoluene	50 ug/mL
							Acrylonitrile	500 ug/mL
							Benzene	50 ug/mL
							Bromobenzene	50 ug/mL
							Bromochloromethane	50 ug/mL
							Bromodichloromethane	50 ug/mL
							Bromoform	50 ug/mL
							Carbon disulfide	50 ug/mL
							Carbon tetrachloride	50 ug/mL
							Chlorobenzene	50 ug/mL
							Chloroform	50 ug/mL
							cis-1,2-Dichloroethene	50 ug/mL
							cis-1,3-Dichloropropene	50 ug/mL
							Cyclohexane	50 ug/mL
							Dibromochloromethane	50 ug/mL
							Dibromomethane	50 ug/mL
							Ethyl ether	50 ug/mL
							Ethyl methacrylate	50 ug/mL
							Ethylbenzene	50 ug/mL
							Hexachlorobutadiene	50 ug/mL
							Hexane	50 ug/mL
							Iodomethane	50 ug/mL

REAGENT TRACEABILITY SUMMARY

Lab Name: TestAmerica Canton Job No.: 240-81698-1

SDG No.:

Reagent ID	Exp Date	Prep Date	Dilutant Used	Reagent Final Volume	Parent Reagent		Analyte	Concentration
					Reagent ID	Volume Added		
							Isobutyl alcohol	1250 ug/mL
							Isopropylbenzene	50 ug/mL
							m-Xylene & p-Xylene	50 ug/mL
							Methyl acetate	250 ug/mL
							Methyl tert-butyl ether	50 ug/mL
							Methylcyclohexane	50 ug/mL
							Methylene Chloride	50 ug/mL
							n-Butylbenzene	50 ug/mL
							n-Heptane	50 ug/mL
							N-Propylbenzene	50 ug/mL
							Naphthalene	50 ug/mL
							o-Xylene	50 ug/mL
							p-Isopropyltoluene	50 ug/mL
							sec-Butylbenzene	50 ug/mL
							Styrene	50 ug/mL
							tert-Butyl alcohol (TBA)	500 ug/mL
							tert-Butylbenzene	50 ug/mL
							Tetrachloroethene	50 ug/mL
							Tetrahydrofuran	100 ug/mL
							Toluene	50 ug/mL
							trans-1,2-Dichloroethene	50 ug/mL
							trans-1,3-Dichloropropene	50 ug/mL
							trans-1,4-Dichloro-2-butene	50 ug/mL
							Trichloroethene	50 ug/mL
					VM569721_00001	0.4 mL	2-Butanone (MEK)	100 ug/mL
							2-Hexanone	100 ug/mL
							4-Methyl-2-pentanone (MIBK)	100 ug/mL
							Acetone	100 ug/mL
					VM569723_00001	2 mL	2-Chloroethyl vinyl ether	100 ug/mL
					VM569724_00009	0.5 mL	Vinyl acetate	50 ug/mL
..VM569720_00003	03/31/18		Restek, Lot A0118177		(Purchased Reagent)		1,1,1,2-Tetrachloroethane	2500 ug/mL
							1,1,1-Trichloroethane	2500 ug/mL
							1,1,2,2-Tetrachloroethane	2500 ug/mL
							1,1,2-Trichloro-1,2,2-trifluor oethane	2500 ug/mL
							1,1,2-Trichloroethane	2500 ug/mL
							1,1-Dichloroethane	2500 ug/mL
							1,1-Dichloroethene	2500 ug/mL
							1,1-Dichloropropene	2500 ug/mL
							1,2,3-Trichlorobenzene	2500 ug/mL
							1,2,3-Trichloropropane	2500 ug/mL
							1,2,4-Trichlorobenzene	2500 ug/mL
							1,2,4-Trimethylbenzene	2500 ug/mL
							1,2-Dibromo-3-Chloropropane	2500 ug/mL
							1,2-Dibromoethane	2500 ug/mL
							1,2-Dichlorobenzene	2500 ug/mL
							1,2-Dichloroethane	2500 ug/mL
							1,2-Dichloropropane	2500 ug/mL

REAGENT TRACEABILITY SUMMARY

Lab Name: TestAmerica Canton Job No.: 240-81698-1

SDG No.:

Reagent ID	Exp Date	Prep Date	Dilutant Used	Reagent Final Volume	Parent Reagent		Analyte	Concentration
					Reagent ID	Volume Added		
							1,3,5-Trimethylbenzene	2500 ug/mL
							1,3-Dichlorobenzene	2500 ug/mL
							1,3-Dichloropropane	2500 ug/mL
							1,4-Dichlorobenzene	2500 ug/mL
							1,4-Dioxane	50000 ug/mL
							2,2-Dichloropropane	2500 ug/mL
							2-Chlorotoluene	2500 ug/mL
							3-Chloro-1-propene	2500 ug/mL
							4-Chlorotoluene	2500 ug/mL
							Acrylonitrile	25000 ug/mL
							Benzene	2500 ug/mL
							Bromobenzene	2500 ug/mL
							Bromochloromethane	2500 ug/mL
							Bromodichloromethane	2500 ug/mL
							Bromoform	2500 ug/mL
							Carbon disulfide	2500 ug/mL
							Carbon tetrachloride	2500 ug/mL
							Chlorobenzene	2500 ug/mL
							Chloroform	2500 ug/mL
							cis-1,2-Dichloroethene	2500 ug/mL
							cis-1,3-Dichloropropene	2500 ug/mL
							Cyclohexane	2500 ug/mL
							Dibromochloromethane	2500 ug/mL
							Dibromomethane	2500 ug/mL
							Ethyl ether	2500 ug/mL
							Ethyl methacrylate	2500 ug/mL
							Ethylbenzene	2500 ug/mL
							Hexachlorobutadiene	2500 ug/mL
							Hexane	2500 ug/mL
							Iodomethane	2500 ug/mL
							Isobutyl alcohol	62500 ug/mL
							Isopropylbenzene	2500 ug/mL
							m-Xylene & p-Xylene	2500 ug/mL
							Methyl acetate	12500 ug/mL
							Methyl tert-butyl ether	2500 ug/mL
							Methylcyclohexane	2500 ug/mL
							Methylene Chloride	2500 ug/mL
							n-Butylbenzene	2500 ug/mL
							n-Heptane	2500 ug/mL
							N-Propylbenzene	2500 ug/mL
							Naphthalene	2500 ug/mL
							o-Xylene	2500 ug/mL
							p-Isopropyltoluene	2500 ug/mL
							sec-Butylbenzene	2500 ug/mL
							Styrene	2500 ug/mL
							tert-Butyl alcohol (TBA)	25000 ug/mL
							tert-Butylbenzene	2500 ug/mL
							Tetrachloroethene	2500 ug/mL

REAGENT TRACEABILITY SUMMARY

Lab Name: TestAmerica Canton Job No.: 240-81698-1

SDG No.:

Reagent ID	Exp Date	Prep Date	Dilutant Used	Reagent Final Volume	Parent Reagent		Analyte	Concentration
					Reagent ID	Volume Added		
							Tetrahydrofuran	5000 ug/mL
							Toluene	2500 ug/mL
							trans-1,2-Dichloroethene	2500 ug/mL
							trans-1,3-Dichloropropene	2500 ug/mL
							trans-1,4-Dichloro-2-butene	2500 ug/mL
							Trichloroethene	2500 ug/mL
..VM569721_00001	04/30/18		Restek, Lot A0110400		(Purchased Reagent)		2-Butanone (MEK)	12500 ug/mL
							2-Hexanone	12500 ug/mL
							4-Methyl-2-pentanone (MIBK)	12500 ug/mL
							Acetone	12500 ug/mL
..VM569723_00001	01/31/18		restek, Lot A0108172		(Purchased Reagent)		2-Chloroethyl vinyl ether	2500 ug/mL
..VM569724_00009	05/31/17		Restek, Lot A0123104		(Purchased Reagent)		Vinyl acetate	5000 ug/mL
VMRPRIMW_00242	07/08/17	07/01/17	MEOH, Lot NA	4 mL	VMRPRIM_00023	4 mL	2-Butanone (MEK)	100 ug/mL
							2-Hexanone	100 ug/mL
							4-Methyl-2-pentanone (MIBK)	100 ug/mL
							Acetone	100 ug/mL
							2-Chloroethyl vinyl ether	100 ug/mL
							Vinyl acetate	50 ug/mL
							1,1,1,2-Tetrachloroethane	50 ug/mL
							1,1,1-Trichloroethane	50 ug/mL
							1,1,2,2-Tetrachloroethane	50 ug/mL
							1,1,2-Trichloro-1,2,2-trifluor oethane	50 ug/mL
							1,1,2-Trichloroethane	50 ug/mL
							1,1-Dichloroethane	50 ug/mL
							1,1-Dichloroethene	50 ug/mL
							1,1-Dichloropropene	50 ug/mL
							1,2,3-Trichlorobenzene	50 ug/mL
							1,2,3-Trichloropropane	50 ug/mL
							1,2,4-Trichlorobenzene	50 ug/mL
							1,2,4-Trimethylbenzene	50 ug/mL
							1,2-Dibromo-3-Chloropropane	50 ug/mL
							1,2-Dibromoethane	50 ug/mL
							1,2-Dichlorobenzene	50 ug/mL
							1,2-Dichloroethane	50 ug/mL
							1,2-Dichloropropane	50 ug/mL
							1,3,5-Trimethylbenzene	50 ug/mL
							1,3-Dichlorobenzene	50 ug/mL
							1,3-Dichloropropane	50 ug/mL
							1,4-Dichlorobenzene	50 ug/mL
							1,4-Dioxane	1000 ug/mL
							2,2-Dichloropropane	50 ug/mL
							2-Chlorotoluene	50 ug/mL
							3-Chloro-1-propene	50 ug/mL
							4-Chlorotoluene	50 ug/mL
							Acrylonitrile	500 ug/mL
							Benzene	50 ug/mL
							Bromobenzene	50 ug/mL

REAGENT TRACEABILITY SUMMARY

Lab Name: TestAmerica Canton Job No.: 240-81698-1

SDG No.:

Reagent ID	Exp Date	Prep Date	Dilutant Used	Reagent Final Volume	Parent Reagent		Analyte	Concentration
					Reagent ID	Volume Added		
							Bromochloromethane	50 ug/mL
							Bromodichloromethane	50 ug/mL
							Bromoform	50 ug/mL
							Carbon disulfide	50 ug/mL
							Carbon tetrachloride	50 ug/mL
							Chlorobenzene	50 ug/mL
							Chloroform	50 ug/mL
							cis-1,2-Dichloroethene	50 ug/mL
							cis-1,3-Dichloropropene	50 ug/mL
							Cyclohexane	50 ug/mL
							Dibromochloromethane	50 ug/mL
							Dibromomethane	50 ug/mL
							Ethyl ether	50 ug/mL
							Ethyl methacrylate	50 ug/mL
							Ethylbenzene	50 ug/mL
							Hexachlorobutadiene	50 ug/mL
							Hexane	50 ug/mL
							Iodomethane	50 ug/mL
							Isobutyl alcohol	1250 ug/mL
							Isopropylbenzene	50 ug/mL
							m-Xylene & p-Xylene	50 ug/mL
							Methyl acetate	100 ug/mL
							Methyl tert-butyl ether	50 ug/mL
							Methylcyclohexane	50 ug/mL
							Methylene Chloride	50 ug/mL
							n-Butylbenzene	50 ug/mL
							n-Heptane	50 ug/mL
							N-Propylbenzene	50 ug/mL
							Naphthalene	50 ug/mL
							o-Xylene	50 ug/mL
							p-Isopropyltoluene	50 ug/mL
							sec-Butylbenzene	50 ug/mL
							Styrene	50 ug/mL
							tert-Butyl alcohol (TBA)	500 ug/mL
							tert-Butylbenzene	50 ug/mL
							Tetrachloroethene	50 ug/mL
							Tetrahydrofuran	100 ug/mL
							Toluene	50 ug/mL
							trans-1,2-Dichloroethene	50 ug/mL
							trans-1,3-Dichloropropene	50 ug/mL
							trans-1,4-Dichloro-2-butene	50 ug/mL
							Trichloroethene	50 ug/mL
.VMRPRIM_00023	09/30/17	06/30/17	MEOH, Lot 0000147462	50 mL	VM569721_00001	0.4 mL	2-Butanone (MEK)	100 ug/mL
							2-Hexanone	100 ug/mL
							4-Methyl-2-pentanone (MIBK)	100 ug/mL
							Acetone	100 ug/mL
					VM569723_00002	1 mL	2-Chloroethyl vinyl ether	100 ug/mL
					VM569723_00003	1 mL	2-Chloroethyl vinyl ether	100 ug/mL

REAGENT TRACEABILITY SUMMARY

Lab Name: TestAmerica Canton Job No.: 240-81698-1

SDG No.:

Reagent ID	Exp Date	Prep Date	Dilutant Used	Reagent Final Volume	Parent Reagent		Analyte	Concentration
					Reagent ID	Volume Added		
					VM569724_00010	0.5 mL	Vinyl acetate	50 ug/mL
					VM571992_00001	1 mL	1,1,1,2-Tetrachloroethane	50 ug/mL
							1,1,1-Trichloroethane	50 ug/mL
							1,1,2,2-Tetrachloroethane	50 ug/mL
							1,1,2-Trichloro-1,2,2-trifluor oethane	50 ug/mL
							1,1,2-Trichloroethane	50 ug/mL
							1,1-Dichloroethane	50 ug/mL
							1,1-Dichloroethene	50 ug/mL
							1,1-Dichloropropene	50 ug/mL
							1,2,3-Trichlorobenzene	50 ug/mL
							1,2,3-Trichloropropane	50 ug/mL
							1,2,4-Trichlorobenzene	50 ug/mL
							1,2,4-Trimethylbenzene	50 ug/mL
							1,2-Dibromo-3-Chloropropane	50 ug/mL
							1,2-Dibromoethane	50 ug/mL
							1,2-Dichlorobenzene	50 ug/mL
							1,2-Dichloroethane	50 ug/mL
							1,2-Dichloropropane	50 ug/mL
							1,3,5-Trimethylbenzene	50 ug/mL
							1,3-Dichlorobenzene	50 ug/mL
							1,3-Dichloropropane	50 ug/mL
							1,4-Dichlorobenzene	50 ug/mL
							1,4-Dioxane	1000 ug/mL
							2,2-Dichloropropane	50 ug/mL
							2-Chlorotoluene	50 ug/mL
							3-Chloro-1-propene	50 ug/mL
							4-Chlorotoluene	50 ug/mL
							Acrylonitrile	500 ug/mL
							Benzene	50 ug/mL
							Bromobenzene	50 ug/mL
							Bromochloromethane	50 ug/mL
							Bromodichloromethane	50 ug/mL
							Bromoform	50 ug/mL
							Carbon disulfide	50 ug/mL
							Carbon tetrachloride	50 ug/mL
							Chlorobenzene	50 ug/mL
							Chloroform	50 ug/mL
							cis-1,2-Dichloroethene	50 ug/mL
							cis-1,3-Dichloropropene	50 ug/mL
							Cyclohexane	50 ug/mL
							Dibromochloromethane	50 ug/mL
							Dibromomethane	50 ug/mL
							Ethyl ether	50 ug/mL
							Ethyl methacrylate	50 ug/mL
							Ethylbenzene	50 ug/mL
							Hexachlorobutadiene	50 ug/mL
							Hexane	50 ug/mL

REAGENT TRACEABILITY SUMMARY

Lab Name: TestAmerica Canton Job No.: 240-81698-1

SDG No.:

Reagent ID	Exp Date	Prep Date	Dilutant Used	Reagent Final Volume	Parent Reagent		Analyte	Concentration
					Reagent ID	Volume Added		
							Iodomethane	50 ug/mL
							Isobutyl alcohol	1250 ug/mL
							Isopropylbenzene	50 ug/mL
							m-Xylene & p-Xylene	50 ug/mL
							Methyl acetate	100 ug/mL
							Methyl tert-butyl ether	50 ug/mL
							Methylcyclohexane	50 ug/mL
							Methylene Chloride	50 ug/mL
							n-Butylbenzene	50 ug/mL
							n-Heptane	50 ug/mL
							N-Propylbenzene	50 ug/mL
							Naphthalene	50 ug/mL
							o-Xylene	50 ug/mL
							p-Isopropyltoluene	50 ug/mL
							sec-Butylbenzene	50 ug/mL
							Styrene	50 ug/mL
							tert-Butyl alcohol (TBA)	500 ug/mL
							tert-Butylbenzene	50 ug/mL
							Tetrachloroethene	50 ug/mL
							Tetrahydrofuran	100 ug/mL
							Toluene	50 ug/mL
							trans-1,2-Dichloroethene	50 ug/mL
							trans-1,3-Dichloropropene	50 ug/mL
							trans-1,4-Dichloro-2-butene	50 ug/mL
							Trichloroethene	50 ug/mL
..VM569721_00001	04/30/18		Restek, Lot A0110400		(Purchased Reagent)		2-Butanone (MEK)	12500 ug/mL
							2-Hexanone	12500 ug/mL
							4-Methyl-2-pentanone (MIBK)	12500 ug/mL
							Acetone	12500 ug/mL
..VM569723_00002	03/31/18		restek, Lot A0109994		(Purchased Reagent)		2-Chloroethyl vinyl ether	2500 ug/mL
..VM569723_00003	07/31/18		restek, Lot A0112895		(Purchased Reagent)		2-Chloroethyl vinyl ether	2500 ug/mL
..VM569724_00010	09/30/17		Restek, Lot A0125716		(Purchased Reagent)		Vinyl acetate	5000 ug/mL
..VM571992_00001	12/31/18		Restek, Lot A0123711		(Purchased Reagent)		1,1,1,2-Tetrachloroethane	2500 ug/mL
							1,1,1-Trichloroethane	2500 ug/mL
							1,1,2,2-Tetrachloroethane	2500 ug/mL
							1,1,2-Trichloro-1,2,2-trifluor oethane	2500 ug/mL
							1,1,2-Trichloroethane	2500 ug/mL
							1,1-Dichloroethane	2500 ug/mL
							1,1-Dichloroethene	2500 ug/mL
							1,1-Dichloropropene	2500 ug/mL
							1,2,3-Trichlorobenzene	2500 ug/mL
							1,2,3-Trichloropropane	2500 ug/mL
							1,2,4-Trichlorobenzene	2500 ug/mL
							1,2,4-Trimethylbenzene	2500 ug/mL
							1,2-Dibromo-3-Chloropropane	2500 ug/mL
							1,2-Dibromoethane	2500 ug/mL
							1,2-Dichlorobenzene	2500 ug/mL

REAGENT TRACEABILITY SUMMARY

Lab Name: TestAmerica Canton Job No.: 240-81698-1

SDG No.:

Reagent ID	Exp Date	Prep Date	Dilutant Used	Reagent Final Volume	Parent Reagent		Analyte	Concentration
					Reagent ID	Volume Added		
							1,2-Dichloroethane	2500 ug/mL
							1,2-Dichloropropane	2500 ug/mL
							1,3,5-Trimethylbenzene	2500 ug/mL
							1,3-Dichlorobenzene	2500 ug/mL
							1,3-Dichloropropane	2500 ug/mL
							1,4-Dichlorobenzene	2500 ug/mL
							1,4-Dioxane	50000 ug/mL
							2,2-Dichloropropane	2500 ug/mL
							2-Chlorotoluene	2500 ug/mL
							3-Chloro-1-propene	2500 ug/mL
							4-Chlorotoluene	2500 ug/mL
							Acrylonitrile	25000 ug/mL
							Benzene	2500 ug/mL
							Bromobenzene	2500 ug/mL
							Bromochloromethane	2500 ug/mL
							Bromodichloromethane	2500 ug/mL
							Bromoform	2500 ug/mL
							Carbon disulfide	2500 ug/mL
							Carbon tetrachloride	2500 ug/mL
							Chlorobenzene	2500 ug/mL
							Chloroform	2500 ug/mL
							cis-1,2-Dichloroethene	2500 ug/mL
							cis-1,3-Dichloropropene	2500 ug/mL
							Cyclohexane	2500 ug/mL
							Dibromochloromethane	2500 ug/mL
							Dibromomethane	2500 ug/mL
							Ethyl ether	2500 ug/mL
							Ethyl methacrylate	2500 ug/mL
							Ethylbenzene	2500 ug/mL
							Hexachlorobutadiene	2500 ug/mL
							Hexane	2500 ug/mL
							Iodomethane	2500 ug/mL
							Isobutyl alcohol	62500 ug/mL
							Isopropylbenzene	2500 ug/mL
							m-Xylene & p-Xylene	2500 ug/mL
							Methyl acetate	5000 ug/mL
							Methyl tert-butyl ether	2500 ug/mL
							Methylcyclohexane	2500 ug/mL
							Methylene Chloride	2500 ug/mL
							n-Butylbenzene	2500 ug/mL
							n-Heptane	2500 ug/mL
							N-Propylbenzene	2500 ug/mL
							Naphthalene	2500 ug/mL
							o-Xylene	2500 ug/mL
							p-Isopropyltoluene	2500 ug/mL
							sec-Butylbenzene	2500 ug/mL
							Styrene	2500 ug/mL
							tert-Butyl alcohol (TBA)	25000 ug/mL

REAGENT TRACEABILITY SUMMARY

Lab Name: TestAmerica Canton Job No.: 240-81698-1

SDG No.:

Reagent ID	Exp Date	Prep Date	Dilutant Used	Reagent Final Volume	Parent Reagent		Analyte	Concentration
					Reagent ID	Volume Added		
							tert-Butylbenzene	2500 ug/mL
							Tetrachloroethene	2500 ug/mL
							Tetrahydrofuran	5000 ug/mL
							Toluene	2500 ug/mL
							trans-1,2-Dichloroethene	2500 ug/mL
							trans-1,3-Dichloropropene	2500 ug/mL
							trans-1,4-Dichloro-2-butene	2500 ug/mL
							Trichloroethene	2500 ug/mL
VMRPRIMW_00242	07/08/17	07/01/17	MEOH, Lot NA	4 mL	VMRPRIM_00023	4 mL	Xylenes, Total	100 ug/mL
.VMRPRIM_00023	09/30/17	06/30/17	MEOH, Lot 0000147462	50 mL	VM571992_00001	1 mL	Xylenes, Total	100 ug/mL
..VM571992_00001	12/31/18	Restek, Lot A0123711			(Purchased Reagent)		Xylenes, Total	5000 ug/mL
VMUX8SS_00026	09/14/17	03/14/17	MEOH, Lot 0000127999	100 mL	VMCUS8125_00010	866 uL	1,2-Dichloroethane-d4 (Surr)	216.5 ug/mL
							4-Bromofluorobenzene (Surr)	216.5 ug/mL
							Dibromofluoromethane (Surr)	216.5 ug/mL
							Toluene-d8 (Surr)	216.5 ug/mL
.VMCUS8125_00010	11/30/17	Ultra Scientific, Lot CM-5527			(Purchased Reagent)		1,2-Dichloroethane-d4 (Surr)	25000 ug/mL
							4-Bromofluorobenzene (Surr)	25000 ug/mL
							Dibromofluoromethane (Surr)	25000 ug/mL
							Toluene-d8 (Surr)	25000 ug/mL
WCP-XYLENE_00020	02/20/19	JT Baker, Lot 156626			(Purchased Reagent)		Flashpoint	81 Degrees F

Certification Summary

Client: Tetra Tech, Inc.
Project/Site: MRC Waste Characterization

TestAmerica Job ID: 240-81698-1

Laboratory	Authority	Program	EPA Region	Certification ID
TestAmerica Canton	California	State Program	9	2927
TestAmerica Canton	Connecticut	State Program	1	PH-0590
TestAmerica Canton	Florida	NELAP	4	E87225
TestAmerica Canton	Illinois	NELAP	5	200004
TestAmerica Canton	Kansas	NELAP	7	E-10336
TestAmerica Canton	Kentucky (UST)	State Program	4	58
TestAmerica Canton	Kentucky (WW)	State Program	4	98016
TestAmerica Canton	Minnesota	NELAP	5	039-999-348
TestAmerica Canton	Minnesota (Petrofund)	State Program	1	3506
TestAmerica Canton	Nevada	State Program	9	OH-000482008A
TestAmerica Canton	New Jersey	NELAP	2	OH001
TestAmerica Canton	New York	NELAP	2	10975
TestAmerica Canton	Ohio VAP	State Program	5	CL0024
TestAmerica Canton	Oregon	NELAP	10	4062
TestAmerica Canton	Pennsylvania	NELAP	3	68-00340
TestAmerica Canton	Texas	NELAP	6	T104704517-15-5
TestAmerica Canton	USDA	Federal		P330-16-00404
TestAmerica Canton	Virginia	NELAP	3	460175
TestAmerica Canton	Washington	State Program	10	C971
TestAmerica Canton	West Virginia DEP	State Program	3	210
TestAmerica Canton	Wisconsin	State Program	5	999518190

Accreditation may not be offered or required for all methods and analytes reported in this package. Please contact your project manager for the laboratory's current list of certified methods and analytes.

Method 8260C

Volatile Organic Compounds (GC/MS) by Method 8260C

FORM II
GC/MS VOA SURROGATE RECOVERY

Lab Name: TestAmerica Canton Job No.: 240-81698-1

SDG No.:

Matrix: Solid Level: Low

GC Column (1): DB-624 ID: 0.18(mm)

Client Sample ID	Lab Sample ID	DBFM #	DCA #	TOL #	BFB #
WC-FSOIL-062817	240-81698-3	86	83	96	89
WC-SGEO-062817	240-81698-5	82	87	91	86
	MB 240-285711/7	91	85	94	89
	LCS 240-285711/6	94	86	95	89
	LCS 240-285711/8	90	86	91	89
	240-81733-B-18-D MS	59	85	97	87
	240-81733-B-18-E MSD	70	88	96	93

	QC LIMITS
DBFM = Dibromofluoromethane (Surr)	43-131
DCA = 1,2-Dichloroethane-d4 (Surr)	61-127
TOL = Toluene-d8 (Surr)	66-125
BFB = 4-Bromofluorobenzene (Surr)	61-132

Column to be used to flag recovery values

FORM II 8260C

FORM II
GC/MS VOA SURROGATE RECOVERY

Lab Name: TestAmerica Canton Job No.: 240-81698-1

SDG No.:

Matrix: Water Level: Low

GC Column (1): DB-624 ID: 0.18(mm)

Client Sample ID	Lab Sample ID	DBFM #	DCA #	TOL #	BFB #
TB-062817	240-81698-1	89	89	104	91
WC-FDCON-062817	240-81698-4	87	88	106	92
WC-WGEO-062817	240-81698-6	86	84	99	89
	MB 240-285874/6	91	90	108	95
	MB 240-286045/6	85	86	103	90
	LCS 240-285874/3	88	88	106	96
	LCS 240-286045/3	83	85	106	95
WC-FDCON-062817 MS	240-81698-4 MS	86	86	107	96
	240-81718-E-1 MS	87	90	107	96
WC-FDCON-062817 MSD	240-81698-4 MSD	85	86	106	93
	240-81718-H-1 MSD	88	87	109	98

	QC LIMITS
DBFM = Dibromofluoromethane (Surr)	69-124
DCA = 1,2-Dichloroethane-d4 (Surr)	61-138
TOL = Toluene-d8 (Surr)	73-120
BFB = 4-Bromofluorobenzene (Surr)	69-120

Column to be used to flag recovery values

FORM II 8260C

FORM III
GC/MS VOA LAB CONTROL SAMPLE RECOVERY

Lab Name: TestAmerica Canton Job No.: 240-81698-1

SDG No.:

Matrix: Solid Level: Low Lab File ID: UX81009.D

Lab ID: LCS 240-285711/6 Client ID:

COMPOUND	SPIKE ADDED (ug/Kg)	LCS CONCENTRATION (ug/Kg)	LCS % REC	QC LIMITS REC	#
1,1,1,2-Tetrachloroethane	50.0	54.6	109	64-130	
1,1,1-Trichloroethane	50.0	58.1	116	60-136	
1,1,2,2-Tetrachloroethane	50.0	51.1	102	78-120	
1,1,2-Trichloro-1,2,2-trifluoroethane	50.0	56.2	112	64-125	
1,1-Dichloroethane	50.0	51.7	103	72-120	
1,1-Dichloroethene	50.0	54.7	109	58-130	
1,1-Dichloropropene	50.0	53.4	107	70-126	
1,2,3-Trichlorobenzene	50.0	45.8	92	59-121	
1,2,3-Trichloropropane	50.0	53.3	107	79-120	
1,2,4-Trichlorobenzene	50.0	48.4	97	60-124	
1,2,4-Trimethylbenzene	50.0	53.1	106	78-122	
1,2-Dibromo-3-Chloropropane	50.0	50.9	102	40-133	
1,2-Dichlorobenzene	50.0	48.5	97	75-120	
1,2-Dichloroethane	50.0	48.3	97	71-120	
1,2-Dichloropropane	50.0	50.3	101	78-122	
1,3-Dichlorobenzene	50.0	49.8	100	72-120	
1,3-Dichloropropane	50.0	48.6	97	78-120	
1,4-Dichlorobenzene	50.0	47.0	94	71-120	
2,2-Dichloropropane	50.0	58.9	118	40-150	
2-Butanone (MEK)	100	99.9	100	51-120	
2-Chloroethyl vinyl ether	50.0	50.8	102	61-143	
2-Chlorotoluene	50.0	50.4	101	78-120	
2-Hexanone	100	96.7	97	52-129	
4-Chlorotoluene	50.0	49.2	98	75-120	
p-Isopropyltoluene	50.0	56.2	112	76-126	
4-Methyl-2-pentanone (MIBK)	100	99.6	100	65-131	
Acetone	100	106	106	24-125	
Benzene	50.0	50.2	100	77-120	
Bromobenzene	50.0	48.4	97	75-120	
Bromoform	50.0	48.5	97	40-140	
Bromomethane	50.0	54.7	109	10-153	
Carbon disulfide	50.0	59.6	119	17-163	
Carbon tetrachloride	50.0	58.5	117	43-144	
Chlorobenzene	50.0	49.5	99	76-120	
Dibromochloromethane	50.0	53.7	107	46-125	
Chloroethane	50.0	54.4	109	10-166	
Chloroform	50.0	50.1	100	74-120	
Chloromethane	50.0	54.0	108	41-124	
cis-1,2-Dichloroethene	50.0	50.5	101	78-120	
cis-1,3-Dichloropropene	50.0	50.3	101	66-126	
Dibromomethane	50.0	50.1	100	76-120	

Column to be used to flag recovery and RPD values

FORM III 8260C

FORM III
GC/MS VOA LAB CONTROL SAMPLE RECOVERY

Lab Name: TestAmerica Canton Job No.: 240-81698-1

SDG No.:

Matrix: Solid Level: Low Lab File ID: UX81009.D

Lab ID: LCS 240-285711/6 Client ID:

COMPOUND	SPIKE ADDED (ug/Kg)	LCS CONCENTRATION (ug/Kg)	LCS % REC	QC LIMITS REC	#
Bromochloromethane	50.0	49.9	100	76-120	
Dichlorodifluoromethane	50.0	56.0	112	15-127	
Bromodichloromethane	50.0	55.0	110	61-132	
tert-Butyl alcohol (TBA)	500	471	94	39-141	
Ethylbenzene	50.0	51.6	103	76-120	
Hexachlorobutadiene	50.0	49.3	99	62-133	
Isopropylbenzene	50.0	54.5	109	76-124	
Methyl tert-butyl ether	50.0	49.9	100	68-129	
Methylene Chloride	50.0	50.9	102	64-126	
m-Xylene & p-Xylene	50.0	52.1	104	78-120	
Naphthalene	50.0	48.9	98	68-123	
n-Butylbenzene	50.0	55.7	111	72-130	
N-Propylbenzene	50.0	54.7	109	77-126	
o-Xylene	50.0	51.6	103	77-120	
sec-Butylbenzene	50.0	54.7	109	78-125	
Styrene	50.0	49.6	99	80-120	
Tetrachloroethene	50.0	54.1	108	68-122	
Toluene	50.0	51.1	102	74-120	
trans-1,2-Dichloroethene	50.0	55.8	112	74-124	
trans-1,3-Dichloropropene	50.0	46.7	93	55-121	
Trichloroethene	50.0	52.3	105	73-123	
Trichlorofluoromethane	50.0	58.1	116	28-152	
Vinyl acetate	50.0	52.4	105	36-132	
Vinyl chloride	50.0	53.7	107	49-131	
Xylenes, Total	100	104	104	78-120	
tert-Butylbenzene	50.0	53.9	108	75-125	
1,2-Dibromoethane	50.0	50.5	101	80-120	

Column to be used to flag recovery and RPD values

FORM III 8260C

FORM III
GC/MS VOA LAB CONTROL SAMPLE RECOVERY

Lab Name: TestAmerica Canton Job No.: 240-81698-1

SDG No.:

Matrix: Water Level: Low Lab File ID: UXM4229.D

Lab ID: LCS 240-285874/3 Client ID:

COMPOUND	SPIKE ADDED (ug/L)	LCS CONCENTRATION (ug/L)	LCS % REC	QC LIMITS REC	#
1,1,1,2-Tetrachloroethane	20.0	18.7	93	73-136	
1,1,1-Trichloroethane	20.0	17.1	86	64-147	
1,1,2,2-Tetrachloroethane	20.0	22.7	113	58-122	
1,1,2-Trichloro-1,2,2-trifluoroethane	20.0	18.9	95	65-144	
1,1-Dichloroethane	20.0	18.4	92	74-120	
1,1-Dichloroethene	20.0	17.3	86	65-127	
1,1-Dichloropropene	20.0	19.4	97	80-122	
1,2,3-Trichlorobenzene	20.0	20.6	103	31-144	
1,2,3-Trichloropropane	20.0	23.3	117	53-134	
1,2,4-Trichlorobenzene	20.0	19.4	97	34-141	
1,2,4-Trimethylbenzene	20.0	20.5	102	80-120	
1,2-Dibromo-3-Chloropropane	20.0	19.7	99	50-130	
1,2-Dichlorobenzene	20.0	20.3	102	80-120	
1,2-Dichloroethane	20.0	17.9	90	68-133	
1,2-Dichloropropane	20.0	20.3	102	78-127	
1,3-Dichlorobenzene	20.0	19.8	99	80-120	
1,3-Dichloropropane	20.0	22.1	110	71-124	
1,4-Dichlorobenzene	20.0	19.8	99	80-120	
2,2-Dichloropropane	20.0	18.1	91	32-178	
2-Butanone (MEK)	40.0	38.5	96	43-149	
2-Chloroethyl vinyl ether	20.0	16.9	85	58-123	
2-Chlorotoluene	20.0	21.5	107	80-120	
2-Hexanone	40.0	42.1	105	28-169	
4-Chlorotoluene	20.0	22.0	110	79-120	
p-Isopropyltoluene	20.0	20.3	101	78-125	
4-Methyl-2-pentanone (MIBK)	40.0	38.5	96	53-144	
Acetone	40.0	27.7	69	35-131	
Benzene	20.0	18.9	94	79-120	
Bromobenzene	20.0	20.7	103	73-120	
Bromoform	20.0	17.9	89	55-145	
Bromomethane	20.0	16.4	82	17-158	
Carbon disulfide	20.0	17.8	89	49-141	
Carbon tetrachloride	20.0	16.6	83	55-171	
Chlorobenzene	20.0	20.0	100	80-120	
Dibromochloromethane	20.0	19.4	97	64-129	
Chloroethane	20.0	19.0	95	10-149	
Chloroform	20.0	17.2	86	80-120	
Chloromethane	20.0	16.3	81	59-124	
cis-1,2-Dichloroethene	20.0	17.4	87	77-120	
cis-1,3-Dichloropropene	20.0	18.9	95	75-120	
Dibromomethane	20.0	17.3	87	80-120	

Column to be used to flag recovery and RPD values

FORM III 8260C

FORM III
GC/MS VOA LAB CONTROL SAMPLE RECOVERY

Lab Name: TestAmerica Canton Job No.: 240-81698-1

SDG No.:

Matrix: Water Level: Low Lab File ID: UXM4229.D

Lab ID: LCS 240-285874/3 Client ID:

COMPOUND	SPIKE ADDED (ug/L)	LCS CONCENTRATION (ug/L)	LCS % REC	QC LIMITS REC	#
Bromochloromethane	20.0	18.0	90	78-120	
Dichlorodifluoromethane	20.0	14.8	74	42-141	
Bromodichloromethane	20.0	17.6	88	79-125	
tert-Butyl alcohol (TBA)	200	189	95	52-136	
Ethylbenzene	20.0	20.3	102	80-120	
Hexachlorobutadiene	20.0	18.0	90	36-146	
Isopropylbenzene	20.0	19.0	95	80-128	
Methyl tert-butyl ether	20.0	17.5	87	73-120	
Methylene Chloride	20.0	17.0	85	64-140	
m-Xylene & p-Xylene	20.0	19.7	99	80-120	
Naphthalene	20.0	20.6	103	31-127	
n-Butylbenzene	20.0	20.2	101	60-137	
N-Propylbenzene	20.0	21.9	109	76-120	
o-Xylene	20.0	19.4	97	80-120	
sec-Butylbenzene	20.0	20.4	102	76-124	
Styrene	20.0	19.7	99	80-121	
Tetrachloroethene	20.0	20.3	101	80-122	
Toluene	20.0	21.1	105	78-120	
trans-1,2-Dichloroethene	20.0	18.2	91	74-124	
trans-1,3-Dichloropropene	20.0	20.0	100	67-120	
Trichloroethene	20.0	17.7	89	76-124	
Trichlorofluoromethane	20.0	15.0	75	27-176	
Vinyl acetate	20.0	22.1	110	42-141	
Vinyl chloride	20.0	17.2	86	65-124	
Xylenes, Total	40.0	39.1	98	80-120	
tert-Butylbenzene	20.0	20.2	101	79-120	
1,2-Dibromoethane	20.0	20.8	104	80-120	

Column to be used to flag recovery and RPD values

FORM III 8260C

FORM III
GC/MS VOA LAB CONTROL SAMPLE RECOVERY

Lab Name: TestAmerica Canton Job No.: 240-81698-1

SDG No.:

Matrix: Water Level: Low Lab File ID: UXM4284.D

Lab ID: LCS 240-286045/3 Client ID:

COMPOUND	SPIKE ADDED (ug/L)	LCS CONCENTRATION (ug/L)	LCS % REC	QC LIMITS REC	#
1,1,1,2-Tetrachloroethane	20.0	18.8	94	73-136	
1,1,1-Trichloroethane	20.0	17.4	87	64-147	
1,1,2,2-Tetrachloroethane	20.0	21.8	109	58-122	
1,1,2-Trichloro-1,2,2-trifluoroethane	20.0	19.2	96	65-144	
1,1-Dichloroethane	20.0	18.6	93	74-120	
1,1-Dichloroethene	20.0	17.2	86	65-127	
1,1-Dichloropropene	20.0	19.6	98	80-122	
1,2,3-Trichlorobenzene	20.0	19.8	99	31-144	
1,2,3-Trichloropropane	20.0	22.0	110	53-134	
1,2,4-Trichlorobenzene	20.0	18.6	93	34-141	
1,2,4-Trimethylbenzene	20.0	20.3	102	80-120	
1,2-Dibromo-3-Chloropropane	20.0	18.7	93	50-130	
1,2-Dichlorobenzene	20.0	20.1	101	80-120	
1,2-Dichloroethane	20.0	17.2	86	68-133	
1,2-Dichloropropane	20.0	19.9	99	78-127	
1,3-Dichlorobenzene	20.0	19.8	99	80-120	
1,3-Dichloropropane	20.0	21.6	108	71-124	
1,4-Dichlorobenzene	20.0	19.6	98	80-120	
2,2-Dichloropropane	20.0	18.8	94	32-178	
2-Butanone (MEK)	40.0	35.8	89	43-149	
2-Chloroethyl vinyl ether	20.0	18.7	93	58-123	
2-Chlorotoluene	20.0	21.0	105	80-120	
2-Hexanone	40.0	39.1	98	28-169	
4-Chlorotoluene	20.0	21.6	108	79-120	
p-Isopropyltoluene	20.0	20.2	101	78-125	
4-Methyl-2-pentanone (MIBK)	40.0	37.1	93	53-144	
Acetone	40.0	26.7	67	35-131	
Benzene	20.0	18.8	94	79-120	
Bromobenzene	20.0	20.6	103	73-120	
Bromoform	20.0	17.7	89	55-145	
Bromomethane	20.0	16.3	82	17-158	
Carbon disulfide	20.0	18.1	91	49-141	
Carbon tetrachloride	20.0	16.6	83	55-171	
Chlorobenzene	20.0	20.2	101	80-120	
Dibromochloromethane	20.0	19.4	97	64-129	
Chloroethane	20.0	18.4	92	10-149	
Chloroform	20.0	17.1	86	80-120	
Chloromethane	20.0	15.7	78	59-124	
cis-1,2-Dichloroethene	20.0	17.4	87	77-120	
cis-1,3-Dichloropropene	20.0	18.5	93	75-120	
Dibromomethane	20.0	16.9	84	80-120	

Column to be used to flag recovery and RPD values

FORM III 8260C

FORM III
GC/MS VOA LAB CONTROL SAMPLE RECOVERY

Lab Name: TestAmerica Canton Job No.: 240-81698-1

SDG No.:

Matrix: Water Level: Low Lab File ID: UXM4284.D

Lab ID: LCS 240-286045/3 Client ID:

COMPOUND	SPIKE ADDED (ug/L)	LCS CONCENTRATION (ug/L)	LCS % REC	QC LIMITS REC	#
Bromochloromethane	20.0	18.0	90	78-120	
Dichlorodifluoromethane	20.0	16.7	83	42-141	
Bromodichloromethane	20.0	17.6	88	79-125	
tert-Butyl alcohol (TBA)	200	173	87	52-136	
Ethylbenzene	20.0	20.4	102	80-120	
Hexachlorobutadiene	20.0	18.3	91	36-146	
Isopropylbenzene	20.0	19.1	95	80-128	
Methyl tert-butyl ether	20.0	17.0	85	73-120	
Methylene Chloride	20.0	16.7	83	64-140	
m-Xylene & p-Xylene	20.0	20.0	100	80-120	
Naphthalene	20.0	19.8	99	31-127	
n-Butylbenzene	20.0	20.5	102	60-137	
N-Propylbenzene	20.0	21.8	109	76-120	
o-Xylene	20.0	19.3	97	80-120	
sec-Butylbenzene	20.0	20.6	103	76-124	
Styrene	20.0	19.6	98	80-121	
Tetrachloroethene	20.0	20.4	102	80-122	
Toluene	20.0	21.1	105	78-120	
trans-1,2-Dichloroethene	20.0	18.5	93	74-124	
trans-1,3-Dichloropropene	20.0	19.5	98	67-120	
Trichloroethene	20.0	17.5	88	76-124	
Trichlorofluoromethane	20.0	16.1	81	27-176	
Vinyl acetate	20.0	20.8	104	42-141	
Vinyl chloride	20.0	17.4	87	65-124	
Xylenes, Total	40.0	39.3	98	80-120	
tert-Butylbenzene	20.0	20.2	101	79-120	
1,2-Dibromoethane	20.0	20.3	101	80-120	

Column to be used to flag recovery and RPD values

FORM III 8260C

FORM III
GC/MS VOA MATRIX SPIKE RECOVERY

Lab Name: TestAmerica Canton Job No.: 240-81698-1

SDG No.:

Matrix: Water Level: Low Lab File ID: UXM4254.D

Lab ID: 240-81698-4 MS Client ID: WC-FDCON-062817 MS

COMPOUND	SPIKE ADDED (ug/L)	SAMPLE CONCENTRATION (ug/L)	MS CONCENTRATION (ug/L)	MS % REC	QC LIMITS REC	#
1,1,1,2-Tetrachloroethane	125	2.9 U	116	93	67-142	
1,1,1-Trichloroethane	125	1.4 U	106	85	57-156	
1,1,2,2-Tetrachloroethane	125	2.0 U	141	113	51-123	
1,1,2-Trichloro-1,2,2-trifluoroethane	125	2.6 U	111	89	58-137	
1,1-Dichloroethane	125	1.6 U	114	91	69-122	
1,1-Dichloroethene	125	1.7 U	109	88	62-127	
1,1-Dichloropropene	125	1.8 U	117	94	55-136	
1,2,3-Trichlorobenzene	125	2.2 U	112	90	40-139	
1,2,3-Trichloropropane	125	3.4 U	138	110	41-152	
1,2,4-Trichlorobenzene	125	1.7 U	105	84	26-138	
1,2,4-Trimethylbenzene	125	1.5 U	121	96	64-120	
1,2-Dibromo-3-Chloropropane	125	2.9 U	117	93	48-130	
1,2-Dichlorobenzene	125	1.6 U	121	97	70-120	
1,2-Dichloroethane	125	1.9 U	109	88	64-138	
1,2-Dichloropropane	125	1.9 U	123	98	72-131	
1,3-Dichlorobenzene	125	2.0 U	118	95	71-120	
1,3-Dichloropropane	125	1.8 U	130	104	58-137	
1,4-Dichlorobenzene	125	1.4 U	115	92	72-120	
2,2-Dichloropropane	125	2.1 U	99.5	80	34-153	
2-Butanone (MEK)	250	8.0 J	224	86	34-153	
2-Chloroethyl vinyl ether	125	4.1 U	4.1 U	0	10-120	F1
2-Chlorotoluene	125	1.8 U	126	100	52-134	
2-Hexanone	250	7.7 U	246	98	21-184	
4-Chlorotoluene	125	1.4 U	125	100	52-133	
p-Isopropyltoluene	125	1.8 U	115	92	70-120	
4-Methyl-2-pentanone (MIBK)	250	4.4 U	229	91	53-147	
Acetone	250	11 U	173	69	19-133	
Benzene	125	1.8 U	116	92	69-127	
Bromobenzene	125	1.9 U	122	98	59-131	
Bromoform	125	2.7 U	110	88	61-135	
Bromomethane	125	2.6 U	95.6	76	10-148	
Carbon disulfide	125	2.1 U	109	88	46-143	
Carbon tetrachloride	125	2.2 U	100	80	53-175	
Chlorobenzene	125	2.0 U	121	97	76-120	
Dibromochloromethane	125	1.6 U	119	95	62-131	
Chloroethane	125	2.6 U	110	88	10-141	
Chloroform	125	13	118	84	74-125	
Chloromethane	125	2.7 U	96.8	77	34-127	
cis-1,2-Dichloroethene	125	8.1	115	86	69-127	
cis-1,3-Dichloropropene	125	1.6 U	106	85	68-120	
Dibromomethane	125	2.9 U	103	82	73-120	

Column to be used to flag recovery and RPD values

FORM III 8260C

FORM III
GC/MS VOA MATRIX SPIKE RECOVERY

Lab Name: TestAmerica Canton Job No.: 240-81698-1

SDG No.:

Matrix: Water Level: Low Lab File ID: UXM4254.D

Lab ID: 240-81698-4 MS Client ID: WC-FDCON-062817 MS

COMPOUND	SPIKE ADDED (ug/L)	SAMPLE CONCENTRATION (ug/L)	MS CONCENTRATION (ug/L)	MS % REC	QC LIMITS REC	#
Bromochloromethane	125	2.9 U	106	85	66-132	
Dichlorodifluoromethane	125	3.1 U	98.2	79	45-130	
Bromodichloromethane	125	1.9 U	105	84	75-128	
tert-Butyl alcohol (TBA)	1250	28 U	1030	82	70-130	
Ethylbenzene	125	1.6 U	123	98	72-121	
Hexachlorobutadiene	125	2.3 U	88.1	70	30-134	
Isopropylbenzene	125	1.3 U	111	89	70-132	
Methyl tert-butyl ether	125	3.5 J	106	82	67-125	
Methylene Chloride	125	3.3 U	103	83	52-137	
m-Xylene & p-Xylene	125	1.5 U	121	97	70-121	
Naphthalene	125	1.6 U	114	91	28-150	
n-Butylbenzene	125	1.3 U	111	89	38-133	
N-Propylbenzene	125	2.8 U	127	102	50-134	
o-Xylene	125	1.8 U	117	93	71-125	
sec-Butylbenzene	125	1.7 U	117	93	43-133	
Styrene	125	1.4 U	118	94	74-125	
Tetrachloroethene	125	1.9 U	120	96	69-126	
Toluene	125	1.4 U	128	102	69-125	
trans-1,2-Dichloroethene	125	1.8 U	113	90	66-131	
trans-1,3-Dichloropropene	125	1.9 U	115	92	59-120	
Trichloroethene	125	320	406	72	68-129	E
Trichlorofluoromethane	125	3.1 U	99.1	79	28-172	
Vinyl acetate	125	1.8 U	128	102	51-134	
Vinyl chloride	125	2.8 U	108	87	55-123	
Xylenes, Total	250	1.5 U	238	95	71-122	
tert-Butylbenzene	125	1.6 U	117	93	48-131	
1,2-Dibromoethane	125	1.4 U	125	100	73-121	

Column to be used to flag recovery and RPD values

FORM III 8260C

FORM III
GC/MS VOA MATRIX SPIKE RECOVERY

Lab Name: TestAmerica Canton Job No.: 240-81698-1

SDG No.:

Matrix: Solid Level: Low Lab File ID: UX81023.D

Lab ID: 240-81733-B-18-D MS Client ID:

COMPOUND	SPIKE ADDED (ug/Kg)	SAMPLE CONCENTRATION (ug/Kg)	MS CONCENTRATION (ug/Kg)	MS % REC	QC LIMITS REC	#
1,1,1-Trichloroethane	26.7	0.24 U	22.3	84	33-130	
1,1,2,2-Tetrachloroethane	26.7	0.27 U	0.695 J	3	16-157	F1
1,1,2-Trichloro-1,2,2-trifluoroethane	26.7	0.50 U	22.4	84	26-130	
1,1-Dichloroethane	26.7	0.34 U	21.9	82	41-122	
1,1-Dichloroethene	26.7	0.55 U	24.8	93	30-139	
1,2,4-Trichlorobenzene	26.7	0.25 U	9.47	35	10-120	
1,2,4-Trimethylbenzene	26.7	0.41 J	19.1	70	10-146	
1,2-Dibromo-3-Chloropropane	26.7	0.70 U	12.4	46	10-128	
1,2-Dichlorobenzene	26.7	0.23 U	15.9	59	10-120	
1,2-Dichloroethane	26.7	0.30 U	21.0	78	35-122	
1,2-Dichloropropane	26.7	0.32 U	21.2	79	38-130	
1,3-Dichlorobenzene	26.7	0.30 U	15.9	59	10-120	
1,4-Dichlorobenzene	26.7	0.36 U	15.1	56	10-120	
2-Butanone (MEK)	53.4	1.3 U	43.5	81	29-127	
2-Hexanone	53.4	0.59 U	60.0	112	21-136	
4-Methyl-2-pentanone (MIBK)	53.4	0.91 U	45.9	86	16-164	
Acetone	53.4	3.1 U	49.4	93	15-127	
Benzene	26.7	0.33 U	20.6	77	33-127	
Bromoform	26.7	0.41 U	14.8	55	10-120	
Bromomethane	26.7	0.60 U	21.6	81	13-138	
Carbon disulfide	26.7	0.21 U	18.2	68	15-131	
Carbon tetrachloride	26.7	0.26 U	19.6	74	17-127	
Chlorobenzene	26.7	0.34 U	18.1	68	15-122	
Dibromochloromethane	26.7	0.31 U	16.7	62	19-120	
Chloroethane	26.7	0.39 U	22.6	85	15-148	
Chloroform	26.7	0.24 U	20.5	77	41-121	
Chloromethane	26.7	0.39 U	23.1	86	33-122	
cis-1,2-Dichloroethene	26.7	0.29 U	20.8	78	46-120	
cis-1,3-Dichloropropene	26.7	0.27 U	17.1	64	13-127	
Dichlorodifluoromethane	26.7	0.36 U	23.0	86	10-126	
Bromodichloromethane	26.7	0.34 U	18.4	69	22-127	
Ethylbenzene	26.7	0.28 U	17.8	67	18-126	
Isopropylbenzene	26.7	0.20 U	18.0	67	10-128	
Methyl tert-butyl ether	26.7	0.28 U	22.6	85	49-134	
Methylene Chloride	26.7	0.25 U	22.5	84	34-134	
m-Xylene & p-Xylene	26.7	0.41 U	18.6	70	10-136	
n-Butylbenzene	26.7	0.26 U	14.3	54	10-120	
N-Propylbenzene	26.7	0.29 U	19.3	72	10-146	
o-Xylene	26.7	0.23 U	19.0	71	17-128	
sec-Butylbenzene	26.7	0.19 U	18.2	68	10-132	
Styrene	26.7	0.28 U	16.2	61	10-128	

Column to be used to flag recovery and RPD values

FORM III 8260C

FORM III
GC/MS VOA MATRIX SPIKE RECOVERY

Lab Name: TestAmerica Canton Job No.: 240-81698-1

SDG No.:

Matrix: Solid Level: Low Lab File ID: UX81023.D

Lab ID: 240-81733-B-18-D MS Client ID:

COMPOUND	SPIKE ADDED (ug/Kg)	SAMPLE CONCENTRATION (ug/Kg)	MS CONCENTRATION (ug/Kg)	MS % REC	QC LIMITS REC	#
Tetrachloroethene	26.7	0.38 U	18.3	69	17-126	
Toluene	26.7	0.35 U	20.2	76	29-127	
trans-1,2-Dichloroethene	26.7	0.39 U	22.9	86	32-134	
trans-1,3-Dichloropropene	26.7	0.21 U	15.0	56	11-120	
Trichloroethene	26.7	0.42 U	33.9	127	10-160	
Trichlorofluoromethane	26.7	0.25 U	22.1	83	24-137	
Vinyl chloride	26.7	0.29 U	23.1	87	31-134	
Xylenes, Total	53.4	0.41 U	37.6	70	10-137	
tert-Butylbenzene	26.7	0.21 U	20.8	78	10-143	
1,2-Dibromoethane	26.7	0.36 U	19.2	72	25-137	

Column to be used to flag recovery and RPD values

FORM III 8260C

FORM III
GC/MS VOA MATRIX SPIKE RECOVERY

Lab Name: TestAmerica Canton Job No.: 240-81698-1

SDG No.:

Matrix: Water Level: Low Lab File ID: UXM4306.D

Lab ID: 240-81718-E-1 MS Client ID:

COMPOUND	SPIKE ADDED (ug/L)	SAMPLE CONCENTRATION (ug/L)	MS CONCENTRATION (ug/L)	MS % REC	QC LIMITS REC	#
1,1,1,2-Tetrachloroethane	20.0	0.46 U	18.3	92	67-142	
1,1,1-Trichloroethane	20.0	0.23 U	17.3	86	57-156	
1,1,2,2-Tetrachloroethane	20.0	0.32 U	21.7	109	51-123	
1,1-Dichloroethane	20.0	0.25 U	18.5	93	69-122	
1,1-Dichloroethene	20.0	0.27 U	17.2	86	62-127	
1,2,3-Trichloropropane	20.0	0.54 U	21.6	108	41-152	
1,2-Dichlorobenzene	20.0	0.26 U	19.9	100	70-120	
1,2-Dichloroethane	20.0	0.30 U	17.1	86	64-138	
1,2-Dichloropropane	20.0	0.30 U	19.9	99	72-131	
1,4-Dichlorobenzene	20.0	0.23 U	19.2	96	72-120	
2-Butanone (MEK)	40.0	1.0 U	34.1	85	34-153	
2-Hexanone	40.0	1.2 U	40.9	102	21-184	
4-Methyl-2-pentanone (MIBK)	40.0	0.71 U	37.9	95	53-147	
Acetone	40.0	1.8 U	25.8	64	19-133	
Benzene	20.0	0.28 U	18.9	94	69-127	
Bromoform	20.0	0.43 U	16.7	83	61-135	
Bromomethane	20.0	0.42 U	16.5	83	10-148	
Carbon disulfide	20.0	0.34 U	18.4	92	46-143	
Carbon tetrachloride	20.0	0.35 U	16.6	83	53-175	
Chlorobenzene	20.0	0.32 U	19.8	99	76-120	
Dibromochloromethane	20.0	0.25 U	18.7	94	62-131	
Chloroethane	20.0	0.41 U	18.7	93	10-141	
Chloroform	20.0	0.31 U	17.2	86	74-125	
Chloromethane	20.0	0.43 U	16.0	80	34-127	
cis-1,2-Dichloroethene	20.0	0.30 U	17.5	87	69-127	
cis-1,3-Dichloropropene	20.0	0.26 U	17.4	87	68-120	
Dibromomethane	20.0	0.46 U	16.5	82	73-120	
Bromochloromethane	20.0	0.47 U	17.8	89	66-132	
Bromodichloromethane	20.0	0.30 U	17.4	87	75-128	
Ethylbenzene	20.0	0.26 U	20.1	100	72-121	
Methylene Chloride	20.0	0.53 U	16.6	83	52-137	
m-Xylene & p-Xylene	20.0	0.24 U	19.6	98	70-121	
o-Xylene	20.0	0.28 U	19.3	96	71-125	
Styrene	20.0	0.23 U	19.5	98	74-125	
Tetrachloroethene	20.0	0.30 U	19.9	100	69-126	
Toluene	20.0	0.23 U	21.0	105	69-125	
trans-1,2-Dichloroethene	20.0	0.29 U	18.3	91	66-131	
trans-1,3-Dichloropropene	20.0	0.31 U	18.7	94	59-120	
Trichloroethene	20.0	0.33 U	17.4	87	68-129	
Trichlorofluoromethane	20.0	0.50 U	16.1	80	28-172	
Vinyl acetate	20.0	0.28 U	19.8	99	51-134	
Vinyl chloride	20.0	0.45 U	17.8	89	55-123	

Column to be used to flag recovery and RPD values

FORM III 8260C

FORM III
GC/MS VOA MATRIX SPIKE RECOVERY

Lab Name: TestAmerica Canton Job No.: 240-81698-1

SDG No.:

Matrix: Water Level: Low Lab File ID: UXM4306.D

Lab ID: 240-81718-E-1 MS Client ID:

COMPOUND	SPIKE ADDED (ug/L)	SAMPLE CONCENTRATION (ug/L)	MS CONCENTRATION (ug/L)	MS % REC	QC LIMITS REC	#
Xylenes, Total	40.0	0.24 U	38.9	97	71-122	

Column to be used to flag recovery and RPD values

FORM III 8260C

FORM III
GC/MS VOA MATRIX SPIKE DUPLICATE RECOVERY

Lab Name: TestAmerica Canton Job No.: 240-81698-1

SDG No.:

Matrix: Water Level: Low Lab File ID: UXM4255.D

Lab ID: 240-81698-4 MSD Client ID: WC-FDCON-062817 MSD

COMPOUND	SPIKE ADDED (ug/L)	MSD CONCENTRATION (ug/L)	MSD % REC	% RPD	QC LIMITS RPD	QC LIMITS REC	#
1,1,1,2-Tetrachloroethane	125	112	90	3	18	67-142	
1,1,1-Trichloroethane	125	104	83	2	13	57-156	
1,1,2,2-Tetrachloroethane	125	137	110	3	17	51-123	
1,1,2-Trichloro-1,2,2-trifluoroethane	125	112	90	1	35	58-137	
1,1-Dichloroethane	125	112	89	2	11	69-122	
1,1-Dichloroethene	125	106	85	3	14	62-127	
1,1-Dichloropropene	125	113	91	3	35	55-136	
1,2,3-Trichlorobenzene	125	112	90	0	35	40-139	
1,2,3-Trichloropropane	125	137	109	1	12	41-152	
1,2,4-Trichlorobenzene	125	106	85	1	35	26-138	
1,2,4-Trimethylbenzene	125	119	95	1	22	64-120	
1,2-Dibromo-3-Chloropropane	125	110	88	6	31	48-130	
1,2-Dichlorobenzene	125	119	95	2	19	70-120	
1,2-Dichloroethane	125	106	85	3	11	64-138	
1,2-Dichloropropane	125	120	96	2	12	72-131	
1,3-Dichlorobenzene	125	115	92	3	18	71-120	
1,3-Dichloropropane	125	129	103	1	35	58-137	
1,4-Dichlorobenzene	125	115	92	0	17	72-120	
2,2-Dichloropropane	125	102	81	2	35	34-153	
2-Butanone (MEK)	250	228	88	2	23	34-153	
2-Chloroethyl vinyl ether	125	4.1 U	0	NC	35	10-120	F1
2-Chlorotoluene	125	124	99	1	35	52-134	
2-Hexanone	250	247	99	0	12	21-184	
4-Chlorotoluene	125	122	97	3	35	52-133	
p-Isopropyltoluene	125	112	90	3	22	70-120	
4-Methyl-2-pentanone (MIBK)	250	225	90	2	16	53-147	
Acetone	250	175	70	1	35	19-133	
Benzene	125	113	90	2	10	69-127	
Bromobenzene	125	120	96	2	35	59-131	
Bromoform	125	107	86	2	13	61-135	
Bromomethane	125	99.6	80	4	35	10-148	
Carbon disulfide	125	109	87	0	18	46-143	
Carbon tetrachloride	125	99.8	80	0	17	53-175	
Chlorobenzene	125	116	93	4	12	76-120	
Dibromochloromethane	125	118	94	1	15	62-131	
Chloroethane	125	114	91	3	35	10-141	
Chloroform	125	116	83	1	11	74-125	
Chloromethane	125	98.4	79	2	25	34-127	
cis-1,2-Dichloroethene	125	113	84	2	11	69-127	
cis-1,3-Dichloropropene	125	105	84	0	13	68-120	
Dibromomethane	125	102	82	0	16	73-120	

Column to be used to flag recovery and RPD values

FORM III 8260C

FORM III
GC/MS VOA MATRIX SPIKE DUPLICATE RECOVERY

Lab Name: TestAmerica Canton Job No.: 240-81698-1

SDG No.:

Matrix: Water Level: Low Lab File ID: UXM4255.D

Lab ID: 240-81698-4 MSD Client ID: WC-FDCON-062817 MSD

COMPOUND	SPIKE ADDED (ug/L)	MSD CONCENTRATION (ug/L)	MSD % REC	% RPD	QC LIMITS RPD	QC LIMITS REC	#
Bromochloromethane	125	110	88	4	15	66-132	
Dichlorodifluoromethane	125	93.9	75	4	34	45-130	
Bromodichloromethane	125	107	86	2	13	75-128	
tert-Butyl alcohol (TBA)	1250	1030	83	0	35	70-130	
Ethylbenzene	125	118	95	4	15	72-121	
Hexachlorobutadiene	125	95.4	76	8	35	30-134	
Isopropylbenzene	125	108	86	4	16	70-132	
Methyl tert-butyl ether	125	107	83	1	12	67-125	
Methylene Chloride	125	105	84	1	12	52-137	
m-Xylene & p-Xylene	125	115	92	6	15	70-121	
Naphthalene	125	117	93	2	35	28-150	
n-Butylbenzene	125	112	89	0	35	38-133	
N-Propylbenzene	125	122	98	4	35	50-134	
o-Xylene	125	114	92	2	15	71-125	
sec-Butylbenzene	125	113	91	3	35	43-133	
Styrene	125	116	92	2	14	74-125	
Tetrachloroethene	125	116	93	3	18	69-126	
Toluene	125	125	100	2	14	69-125	
trans-1,2-Dichloroethene	125	109	88	3	11	66-131	
trans-1,3-Dichloropropene	125	115	92	1	14	59-120	
Trichloroethene	125	403	69	1	12	68-129	E
Trichlorofluoromethane	125	97.6	78	1	26	28-172	
Vinyl acetate	125	127	102	0	12	51-134	
Vinyl chloride	125	109	87	0	12	55-123	
Xylenes, Total	250	229	92	4	14	71-122	
tert-Butylbenzene	125	114	91	2	35	48-131	
1,2-Dibromoethane	125	124	99	1	12	73-121	

Column to be used to flag recovery and RPD values

FORM III 8260C

FORM III
GC/MS VOA MATRIX SPIKE DUPLICATE RECOVERY

Lab Name: TestAmerica Canton Job No.: 240-81698-1

SDG No.:

Matrix: Solid Level: Low Lab File ID: UX81024.D

Lab ID: 240-81733-B-18-E MSD Client ID:

COMPOUND	SPIKE ADDED (ug/Kg)	MSD CONCENTRATION (ug/Kg)	MSD % REC	% RPD	QC LIMITS RPD	QC LIMITS REC	#
1,1,1-Trichloroethane	25.1	18.1	72	21	40	33-130	
1,1,2,2-Tetrachloroethane	25.1	0.442 J	2	45	40	16-157	F1 F2
1,1,2-Trichloro-1,2,2-trifluoroethane	25.1	18.4	73	20	40	26-130	
1,1-Dichloroethane	25.1	17.8	71	20	40	41-122	
1,1-Dichloroethene	25.1	20.4	81	19	40	30-139	
1,2,4-Trichlorobenzene	25.1	7.62	30	22	40	10-120	
1,2,4-Trimethylbenzene	25.1	13.6	52	34	40	10-146	
1,2-Dibromo-3-Chloropropane	25.1	9.46 J	38	27	40	10-128	
1,2-Dichlorobenzene	25.1	12.2	49	26	40	10-120	
1,2-Dichloroethane	25.1	17.3	69	19	40	35-122	
1,2-Dichloropropane	25.1	18.1	72	15	40	38-130	
1,3-Dichlorobenzene	25.1	11.8	47	30	40	10-120	
1,4-Dichlorobenzene	25.1	11.1	44	30	40	10-120	
2-Butanone (MEK)	50.2	33.6	67	26	40	29-127	
2-Hexanone	50.2	43.7	87	31	40	21-136	
4-Methyl-2-pentanone (MIBK)	50.2	35.8	71	25	40	16-164	
Acetone	50.2	40.2	80	21	40	15-127	
Benzene	25.1	17.4	69	17	40	33-127	
Bromoform	25.1	13.3	53	11	40	10-120	
Bromomethane	25.1	18.1	72	18	40	13-138	
Carbon disulfide	25.1	14.4	57	23	40	15-131	
Carbon tetrachloride	25.1	16.3	65	18	40	17-127	
Chlorobenzene	25.1	14.6	58	21	40	15-122	
Dibromochloromethane	25.1	14.2	57	16	40	19-120	
Chloroethane	25.1	18.8	75	18	40	15-148	
Chloroform	25.1	17.0	68	18	40	41-121	
Chloromethane	25.1	19.8	79	15	40	33-122	
cis-1,2-Dichloroethene	25.1	17.2	68	19	40	46-120	
cis-1,3-Dichloropropene	25.1	13.7	55	22	40	13-127	
Dichlorodifluoromethane	25.1	18.9	75	20	40	10-126	
Bromodichloromethane	25.1	15.3	61	18	40	22-127	
Ethylbenzene	25.1	14.2	56	22	40	18-126	
Isopropylbenzene	25.1	14.5	58	21	40	10-128	
Methyl tert-butyl ether	25.1	18.5	74	20	40	49-134	
Methylene Chloride	25.1	18.0	72	22	40	34-134	
m-Xylene & p-Xylene	25.1	14.7	58	23	40	10-136	
n-Butylbenzene	25.1	10.4	41	32	40	10-120	
N-Propylbenzene	25.1	13.6	54	35	40	10-146	
o-Xylene	25.1	15.2	61	22	40	17-128	
sec-Butylbenzene	25.1	13.2	53	32	40	10-132	
Styrene	25.1	13.2	52	21	40	10-128	

Column to be used to flag recovery and RPD values

FORM III 8260C

FORM III
GC/MS VOA MATRIX SPIKE DUPLICATE RECOVERY

Lab Name: TestAmerica Canton Job No.: 240-81698-1

SDG No.:

Matrix: Solid Level: Low Lab File ID: UX81024.D

Lab ID: 240-81733-B-18-E MSD Client ID:

COMPOUND	SPIKE ADDED (ug/Kg)	MSD CONCENTRATION (ug/Kg)	MSD % REC	% RPD	QC LIMITS RPD	QC LIMITS REC	#
Tetrachloroethene	25.1	15.3	61	18	40	17-126	
Toluene	25.1	16.0	64	23	40	29-127	
trans-1,2-Dichloroethene	25.1	17.9	71	25	40	32-134	
trans-1,3-Dichloropropene	25.1	12.3	49	19	40	11-120	
Trichloroethene	25.1	27.9	111	19	40	10-160	
Trichlorofluoromethane	25.1	18.7	74	17	40	24-137	
Vinyl chloride	25.1	19.2	76	18	40	31-134	
Xylenes, Total	50.2	29.9	60	23	40	10-137	
tert-Butylbenzene	25.1	14.9	59	33	40	10-143	
1,2-Dibromoethane	25.1	16.4	65	16	40	25-137	

Column to be used to flag recovery and RPD values

FORM III 8260C

FORM III
GC/MS VOA MATRIX SPIKE DUPLICATE RECOVERY

Lab Name: TestAmerica Canton Job No.: 240-81698-1

SDG No.:

Matrix: Water Level: Low Lab File ID: UXM4307.D

Lab ID: 240-81718-H-1 MSD Client ID:

COMPOUND	SPIKE ADDED (ug/L)	MSD CONCENTRATION (ug/L)	MSD % REC	% RPD	QC LIMITS RPD	QC LIMITS REC	#
1,1,1,2-Tetrachloroethane	20.0	20.1	100	9	18	67-142	
1,1,1-Trichloroethane	20.0	18.3	91	6	13	57-156	
1,1,2,2-Tetrachloroethane	20.0	22.8	114	5	17	51-123	
1,1-Dichloroethane	20.0	19.8	99	7	11	69-122	
1,1-Dichloroethene	20.0	18.6	93	7	14	62-127	
1,2,3-Trichloropropane	20.0	22.7	113	5	12	41-152	
1,2-Dichlorobenzene	20.0	21.3	107	7	19	70-120	
1,2-Dichloroethane	20.0	18.2	91	6	11	64-138	
1,2-Dichloropropane	20.0	21.2	106	6	12	72-131	
1,4-Dichlorobenzene	20.0	21.0	105	9	17	72-120	
2-Butanone (MEK)	40.0	35.7	89	5	23	34-153	
2-Hexanone	40.0	43.7	109	7	12	21-184	
4-Methyl-2-pentanone (MIBK)	40.0	39.4	98	4	16	53-147	
Acetone	40.0	27.1	68	5	35	19-133	
Benzene	20.0	20.0	100	6	10	69-127	
Bromoform	20.0	18.2	91	9	13	61-135	
Bromomethane	20.0	17.0	85	3	35	10-148	
Carbon disulfide	20.0	19.4	97	6	18	46-143	
Carbon tetrachloride	20.0	17.8	89	7	17	53-175	
Chlorobenzene	20.0	20.9	105	6	12	76-120	
Dibromochloromethane	20.0	20.2	101	8	15	62-131	
Chloroethane	20.0	18.8	94	1	35	10-141	
Chloroform	20.0	18.5	92	7	11	74-125	
Chloromethane	20.0	16.4	82	3	25	34-127	
cis-1,2-Dichloroethene	20.0	18.4	92	5	11	69-127	
cis-1,3-Dichloropropene	20.0	18.8	94	8	13	68-120	
Dibromomethane	20.0	17.3	87	5	16	73-120	
Bromochloromethane	20.0	18.3	92	3	15	66-132	
Bromodichloromethane	20.0	18.6	93	7	13	75-128	
Ethylbenzene	20.0	21.7	108	8	15	72-121	
Methylene Chloride	20.0	17.9	90	8	12	52-137	
m-Xylene & p-Xylene	20.0	21.2	106	8	15	70-121	
o-Xylene	20.0	20.7	104	7	15	71-125	
Styrene	20.0	20.6	103	5	14	74-125	
Tetrachloroethene	20.0	20.6	103	3	18	69-126	
Toluene	20.0	22.6	113	7	14	69-125	
trans-1,2-Dichloroethene	20.0	19.6	98	7	11	66-131	
trans-1,3-Dichloropropene	20.0	20.3	101	8	14	59-120	
Trichloroethene	20.0	18.4	92	6	12	68-129	
Trichlorofluoromethane	20.0	16.6	83	3	26	28-172	
Vinyl acetate	20.0	21.2	106	7	12	51-134	
Vinyl chloride	20.0	18.3	92	3	12	55-123	

Column to be used to flag recovery and RPD values

FORM III 8260C

FORM III
GC/MS VOA MATRIX SPIKE DUPLICATE RECOVERY

Lab Name: TestAmerica Canton Job No.: 240-81698-1

SDG No.:

Matrix: Water Level: Low Lab File ID: UXM4307.D

Lab ID: 240-81718-H-1 MSD Client ID:

COMPOUND	SPIKE ADDED (ug/L)	MSD CONCENTRATION (ug/L)	MSD % REC	% RPD	QC LIMITS RPD	QC LIMITS REC	#
Xylenes, Total	40.0	41.9	105	7	14	71-122	

Column to be used to flag recovery and RPD values

FORM III 8260C

FORM IV
GC/MS VOA METHOD BLANK SUMMARY

Lab Name: TestAmerica Canton Job No.: 240-81698-1

SDG No.:

Lab File ID: UX81010.D Lab Sample ID: MB 240-285711/7

Matrix: Solid Heated Purge:(Y/N) Y

Instrument ID: A3UX8 Date Analyzed: 07/03/2017 03:31

GC Column: DB-624 ID: 0.18(mm)

THIS METHOD BLANK APPLIES TO THE FOLLOWING SAMPLES:

CLIENT SAMPLE ID	LAB SAMPLE ID	LAB FILE ID	DATE ANALYZED
	LCS 240-285711/6	UX81009.D	07/03/2017 03:10
	LCS 240-285711/8	UX81011.D	07/03/2017 03:53
	240-81733-B-18-D MS	UX81023.D	07/03/2017 08:15
	240-81733-B-18-E MSD	UX81024.D	07/03/2017 08:37
WC-FSOIL-062817	240-81698-3	UX81026.D	07/03/2017 09:20
WC-SGEO-062817	240-81698-5	UX81027.D	07/03/2017 09:42

FORM IV
GC/MS VOA METHOD BLANK SUMMARY

Lab Name: TestAmerica Canton Job No.: 240-81698-1

SDG No.:

Lab File ID: UXM4232.D Lab Sample ID: MB 240-285874/6

Matrix: Water Heated Purge:(Y/N) N

Instrument ID: A3UX16 Date Analyzed: 07/05/2017 08:32

GC Column: DB-624 ID: 0.18(mm)

THIS METHOD BLANK APPLIES TO THE FOLLOWING SAMPLES:

CLIENT SAMPLE ID	LAB SAMPLE ID	LAB FILE ID	DATE ANALYZED
	LCS 240-285874/3	UXM4229.D	07/05/2017 07:20
TB-062817	240-81698-1	UXM4244.D	07/05/2017 13:13
WC-FDCON-062817	240-81698-4	UXM4245.D	07/05/2017 13:36
WC-FDCON-062817 MS	240-81698-4 MS	UXM4254.D	07/05/2017 17:05
WC-FDCON-062817 MSD	240-81698-4 MSD	UXM4255.D	07/05/2017 17:28

FORM IV
GC/MS VOA METHOD BLANK SUMMARY

Lab Name: TestAmerica Canton Job No.: 240-81698-1

SDG No.:

Lab File ID: UXM4287.D Lab Sample ID: MB 240-286045/6

Matrix: Water Heated Purge:(Y/N) N

Instrument ID: A3UX16 Date Analyzed: 07/06/2017 09:38

GC Column: DB-624 ID: 0.18(mm)

THIS METHOD BLANK APPLIES TO THE FOLLOWING SAMPLES:

CLIENT SAMPLE ID	LAB SAMPLE ID	LAB FILE ID	DATE ANALYZED
	LCS 240-286045/3	UXM4284.D	07/06/2017 08:29
WC-WGEO-062817	240-81698-6	UXM4298.D	07/06/2017 13:58
	240-81718-E-1 MS	UXM4306.D	07/06/2017 17:05
	240-81718-H-1 MSD	UXM4307.D	07/06/2017 17:31

FORM V
GC/MS VOA INSTRUMENT PERFORMANCE CHECK
BROMOFLUOROBENZENE (BFB)

Lab Name: TestAmerica Canton Job No.: 240-81698-1

SDG No.:

Lab File ID: BFB5200.D BFB Injection Date: 03/29/2017

Instrument ID: A3UX16 BFB Injection Time: 13:36

Analysis Batch No.: 272263

M/E	ION ABUNDANCE CRITERIA	% RELATIVE ABUNDANCE	
50	15.0 - 40.0 % of mass 95	17.9	
75	30.0 - 60.0 % of mass 95	49.6	
95	Base Peak, 100% relative abundance	100.0	
96	5.0 - 9.0 % of mass 95	6.6	
173	Less than 2.0 % of mass 174	0.6	(0.7) 1
174	50.0 - 120.00 % of mass 95	79.2	
175	5.0 - 9.0 % of mass 174	5.7	(7.1) 1
176	95.0 - 101.0 % of mass 174	76.3	(96.3) 1
177	5.0 - 9.0 % of mass 176	5.1	(6.6) 2

1-Value is % mass 174 2-Value is % mass 176

THIS CHECK APPLIES TO THE FOLLOWING SAMPLES, MS, MSD, BLANKS AND STANDARDS:

CLIENT SAMPLE ID	LAB SAMPLE ID	LAB FILE ID	DATE ANALYZED	TIME ANALYZED
	STD8260 240-272263/6	UXM1388.D	03/29/2017	14:02
	STD8260 240-272263/7	UXM1389.D	03/29/2017	14:25
	STD8260 240-272263/8	UXM1390.D	03/29/2017	14:48
	ICIS 240-272263/9	UXM1391.D	03/29/2017	15:11
	STD8260 240-272263/10	UXM1392.D	03/29/2017	15:34
	STD8260 240-272263/11	UXM1393.D	03/29/2017	15:56
	STDA9 240-272263/13	UXM1395.D	03/29/2017	16:47
	STDA9 240-272263/14	UXM1396.D	03/29/2017	17:10
	STDA9 240-272263/15	UXM1397.D	03/29/2017	17:33
	STDA9 240-272263/16	UXM1398.D	03/29/2017	17:55
	STDA9 240-272263/17	UXM1399.D	03/29/2017	18:18
	STDA9 240-272263/18	UXM1400.D	03/29/2017	18:41
	ICV 240-272263/20	UXM1402.D	03/29/2017	19:27
	ICV 240-272263/21	UXM1403.D	03/29/2017	19:50

FORM V
GC/MS VOA INSTRUMENT PERFORMANCE CHECK
BROMOFLUOROBENZENE (BFB)

Lab Name: TestAmerica Canton Job No.: 240-81698-1

SDG No.:

Lab File ID: BFB5321.D BFB Injection Date: 07/05/2017

Instrument ID: A3UX16 BFB Injection Time: 06:31

Analysis Batch No.: 285874

M/E	ION ABUNDANCE CRITERIA	% RELATIVE ABUNDANCE	
50	15.0 - 40.0 % of mass 95	17.6	
75	30.0 - 60.0 % of mass 95	47.0	
95	Base Peak, 100% relative abundance	100.0	
96	5.0 - 9.0 % of mass 95	6.5	
173	Less than 2.0 % of mass 174	0.6	(0.9) 1
174	50.0 - 120.00 % of mass 95	72.6	
175	5.0 - 9.0 % of mass 174	5.0	(6.9) 1
176	95.0 - 101.0 % of mass 174	69.1	(95.2) 1
177	5.0 - 9.0 % of mass 176	4.6	(6.7) 2

1-Value is % mass 174 2-Value is % mass 176

THIS CHECK APPLIES TO THE FOLLOWING SAMPLES, MS, MSD, BLANKS AND STANDARDS:

CLIENT SAMPLE ID	LAB SAMPLE ID	LAB FILE ID	DATE ANALYZED	TIME ANALYZED
	CCVIS 240-285874/2	UXM4228.D	07/05/2017	06:57
	LCS 240-285874/3	UXM4229.D	07/05/2017	07:20
	CCV 240-285874/4	UXM4230.D	07/05/2017	07:43
	MB 240-285874/6	UXM4232.D	07/05/2017	08:32
TB-062817	240-81698-1	UXM4244.D	07/05/2017	13:13
WC-FDCON-062817	240-81698-4	UXM4245.D	07/05/2017	13:36
WC-FDCON-062817 MS	240-81698-4 MS	UXM4254.D	07/05/2017	17:05
WC-FDCON-062817 MSD	240-81698-4 MSD	UXM4255.D	07/05/2017	17:28

FORM V
GC/MS VOA INSTRUMENT PERFORMANCE CHECK
BROMOFLUOROBENZENE (BFB)

Lab Name: TestAmerica Canton Job No.: 240-81698-1

SDG No.:

Lab File ID: BFB5323.D BFB Injection Date: 07/06/2017

Instrument ID: A3UX16 BFB Injection Time: 07:41

Analysis Batch No.: 286045

M/E	ION ABUNDANCE CRITERIA	% RELATIVE ABUNDANCE	
50	15.0 - 40.0 % of mass 95	19.0	
75	30.0 - 60.0 % of mass 95	49.2	
95	Base Peak, 100% relative abundance	100.0	
96	5.0 - 9.0 % of mass 95	6.7	
173	Less than 2.0 % of mass 174	0.7	(0.9) 1
174	50.0 - 120.00 % of mass 95	73.3	
175	5.0 - 9.0 % of mass 174	5.5	(7.5) 1
176	95.0 - 101.0 % of mass 174	71.1	(96.9) 1
177	5.0 - 9.0 % of mass 176	4.7	(6.5) 2

1-Value is % mass 174 2-Value is % mass 176

THIS CHECK APPLIES TO THE FOLLOWING SAMPLES, MS, MSD, BLANKS AND STANDARDS:

CLIENT SAMPLE ID	LAB SAMPLE ID	LAB FILE ID	DATE ANALYZED	TIME ANALYZED
	CCVIS 240-286045/2	UXM4283.D	07/06/2017	08:06
	LCS 240-286045/3	UXM4284.D	07/06/2017	08:29
	CCV 240-286045/4	UXM4285.D	07/06/2017	08:52
	MB 240-286045/6	UXM4287.D	07/06/2017	09:38
WC-WGEO-062817	240-81698-6	UXM4298.D	07/06/2017	13:58
	240-81718-E-1 MS	UXM4306.D	07/06/2017	17:05
	240-81718-H-1 MSD	UXM4307.D	07/06/2017	17:31

FORM V
GC/MS VOA INSTRUMENT PERFORMANCE CHECK
BROMOFLUOROBENZENE (BFB)

Lab Name: TestAmerica Canton Job No.: 240-81698-1

SDG No.:

Lab File ID: BFB8386.D BFB Injection Date: 07/02/2017

Instrument ID: A3UX8 BFB Injection Time: 04:39

Analysis Batch No.: 285694

M/E	ION ABUNDANCE CRITERIA	% RELATIVE ABUNDANCE	
50	15.0 - 40.0 % of mass 95	30.0	
75	30.0 - 60.0 % of mass 95	52.0	
95	Base Peak, 100% relative abundance	100.0	
96	5.0 - 9.0 % of mass 95	6.6	
173	Less than 2.0 % of mass 174	0.5	(0.6) 1
174	50.0 - 120.00 % of mass 95	74.0	
175	5.0 - 9.0 % of mass 174	5.6	(7.5) 1
176	95.0 - 101.0 % of mass 174	71.8	(97.0) 1
177	5.0 - 9.0 % of mass 176	4.3	(6.0) 2

1-Value is % mass 174 2-Value is % mass 176

THIS CHECK APPLIES TO THE FOLLOWING SAMPLES, MS, MSD, BLANKS AND STANDARDS:

CLIENT SAMPLE ID	LAB SAMPLE ID	LAB FILE ID	DATE ANALYZED	TIME ANALYZED
	STD8260 240-285694/3	UX80983.D	07/02/2017	05:21
	STD8260 240-285694/4	UX80984.D	07/02/2017	05:43
	STD8260 240-285694/5	UX80985.D	07/02/2017	06:04
	ICIS 240-285694/6	UX80986.D	07/02/2017	06:26
	STD8260 240-285694/7	UX80987.D	07/02/2017	06:48
	STD8260 240-285694/8	UX80988.D	07/02/2017	07:09
	STD8260 240-285694/9	UX80989.D	07/02/2017	07:31
	STD8260 240-285694/10	UX80990.D	07/02/2017	07:53
	STDA9 240-285694/11	UX80991.D	07/02/2017	08:14
	STDA9 240-285694/12	UX80992.D	07/02/2017	08:36
	STDA9 240-285694/13	UX80993.D	07/02/2017	08:58
	STDA9 240-285694/14	UX80994.D	07/02/2017	09:19
	STDA9 240-285694/15	UX80995.D	07/02/2017	09:41
	STDA9 240-285694/16	UX80996.D	07/02/2017	10:03
	STDA9 240-285694/17	UX80997.D	07/02/2017	10:26
	STDA9 240-285694/18	UX80998.D	07/02/2017	10:48
	ICV 240-285694/19	UX80999.D	07/02/2017	11:10
	ICV 240-285694/20	UX81000.D	07/02/2017	11:32

FORM V
GC/MS VOA INSTRUMENT PERFORMANCE CHECK
BROMOFLUOROBENZENE (BFB)

Lab Name: TestAmerica Canton Job No.: 240-81698-1

SDG No.:

Lab File ID: BFB8387.D BFB Injection Date: 07/03/2017

Instrument ID: A3UX8 BFB Injection Time: 01:54

Analysis Batch No.: 285711

M/E	ION ABUNDANCE CRITERIA	% RELATIVE ABUNDANCE	
50	15.0 - 40.0 % of mass 95	30.1	
75	30.0 - 60.0 % of mass 95	53.1	
95	Base Peak, 100% relative abundance	100.0	
96	5.0 - 9.0 % of mass 95	6.5	
173	Less than 2.0 % of mass 174	0.0	(0.0) 1
174	50.0 - 120.00 % of mass 95	73.8	
175	5.0 - 9.0 % of mass 174	5.7	(7.8) 1
176	95.0 - 101.0 % of mass 174	71.0	(96.2) 1
177	5.0 - 9.0 % of mass 176	4.5	(6.4) 2

1-Value is % mass 174 2-Value is % mass 176

THIS CHECK APPLIES TO THE FOLLOWING SAMPLES, MS, MSD, BLANKS AND STANDARDS:

CLIENT SAMPLE ID	LAB SAMPLE ID	LAB FILE ID	DATE ANALYZED	TIME ANALYZED
	CCVIS 240-285711/4	UX81007.D	07/03/2017	02:26
	CCV 240-285711/5	UX81008.D	07/03/2017	02:47
	LCS 240-285711/6	UX81009.D	07/03/2017	03:10
	MB 240-285711/7	UX81010.D	07/03/2017	03:31
	LCS 240-285711/8	UX81011.D	07/03/2017	03:53
	240-81733-B-18-D MS	UX81023.D	07/03/2017	08:15
	240-81733-B-18-E MSD	UX81024.D	07/03/2017	08:37
WC-FSOIL-062817	240-81698-3	UX81026.D	07/03/2017	09:20
WC-SGEO-062817	240-81698-5	UX81027.D	07/03/2017	09:42

FORM VIII
GC/MS VOA INTERNAL STANDARD AREA AND RETENTION TIME SUMMARY

Lab Name: TestAmerica Canton Job No.: 240-81698-1

SDG No.:

Sample No.: ICIS 240-272263/9 Date Analyzed: 03/29/2017 15:11

Instrument ID: A3UX16 GC Column: DB-624 ID: 0.18(mm)

Lab File ID (Standard): UXM1391.D Heated Purge: (Y/N) N

Calibration ID: 39180

		FB		CBNZd5		DCBd4	
		AREA #	RT #	AREA #	RT #	AREA #	RT #
INITIAL CALIBRATION MID-POINT		776481	5.24	664123	7.92	397614	10.16
UPPER LIMIT		1552962	5.74	1328246	8.42	795228	10.66
LOWER LIMIT		388241	4.74	332062	7.42	198807	9.66
LAB SAMPLE ID	CLIENT SAMPLE ID						
ICV 240-272263/20		753863	5.24	641867	7.92	381510	10.16
ICV 240-272263/21		762653	5.24	636920	7.92	364890	10.16
CCVIS 240-285874/2		846917	5.25	617840	7.93	343643	10.16
CCVIS 240-286045/2		820425	5.24	624534	7.92	348491	10.16

FB = Fluorobenzene
CBNZd5 = Chlorobenzene-d5
DCBd4 = 1,4-Dichlorobenzene-d4

Area Limit = 50%-200% of internal standard area
RT Limit = ± 0.5 minutes of internal standard RT

Column used to flag values outside QC limits

FORM VIII 8260C

FORM VIII
GC/MS VOA INTERNAL STANDARD AREA AND RETENTION TIME SUMMARY

Lab Name: TestAmerica Canton Job No.: 240-81698-1

SDG No.:

Sample No.: CCVIS 240-285874/2 Date Analyzed: 07/05/2017 06:57

Instrument ID: A3UX16 GC Column: DB-624 ID: 0.18(mm)

Lab File ID (Standard): UXM4228.D Heated Purge: (Y/N) N

Calibration ID: 40354

		FB		CBNZd5		DCBd4	
		AREA #	RT #	AREA #	RT #	AREA #	RT #
12/24 HOUR STD		846917	5.25	617840	7.93	343643	10.16
UPPER LIMIT		1693834	5.75	1235680	8.43	687286	10.66
LOWER LIMIT		423459	4.75	308920	7.43	171822	9.66
LAB SAMPLE ID	CLIENT SAMPLE ID						
LCS 240-285874/3		870049	5.24	657345	7.92	352005	10.16
CCV 240-285874/4		819034	5.24	615675	7.92	310731	10.16
MB 240-285874/6		791510	5.24	598154	7.92	305383	10.16
240-81698-1	TB-062817	797886	5.24	604609	7.92	308387	10.16
240-81698-4	WC-FDCON-062817	793674	5.24	599549	7.92	299125	10.16
240-81698-4 MS	WC-FDCON-062817 MS	831327	5.24	618228	7.92	333882	10.16
240-81698-4 MSD	WC-FDCON-062817 MSD	841053	5.24	627933	7.92	337568	10.16

FB = Fluorobenzene
CBNZd5 = Chlorobenzene-d5
DCBd4 = 1,4-Dichlorobenzene-d4

Area Limit = 50%-200% of internal standard area
RT Limit = ± 0.5 minutes of internal standard RT

Column used to flag values outside QC limits

FORM VIII 8260C

FORM VIII
GC/MS VOA INTERNAL STANDARD AREA AND RETENTION TIME SUMMARY

Lab Name: TestAmerica Canton Job No.: 240-81698-1

SDG No.:

Sample No.: CCVIS 240-286045/2 Date Analyzed: 07/06/2017 08:06

Instrument ID: A3UX16 GC Column: DB-624 ID: 0.18(mm)

Lab File ID (Standard): UXM4283.D Heated Purge: (Y/N) N

Calibration ID: 40354

		FB		CBNZd5		DCBd4	
		AREA #	RT #	AREA #	RT #	AREA #	RT #
12/24 HOUR STD		820425	5.24	624534	7.92	348491	10.16
UPPER LIMIT		1640850	5.74	1249068	8.42	696982	10.66
LOWER LIMIT		410213	4.74	312267	7.42	174246	9.66
LAB SAMPLE ID	CLIENT SAMPLE ID						
LCS 240-286045/3		867224	5.24	649276	7.92	352481	10.16
CCV 240-286045/4		833542	5.24	617797	7.92	321474	10.16
MB 240-286045/6		822323	5.24	621646	7.92	317418	10.16
240-81698-6	WC-WGEO-062817	787753	5.25	608163	7.92	306431	10.16
240-81718-E-1 MS		787484	5.25	592093	7.92	322140	10.16
240-81718-H-1 MSD		810064	5.25	605049	7.92	327079	10.16

FB = Fluorobenzene
FB = Fluorobenzene
CBNZd5 = Chlorobenzene-d5
CBNZd5 = Chlorobenzene-d5
Area Limit = 50%-200% of internal standard area
DCBd4 = 1,4-Dichlorobenzene-d4
RT Limit = ± 0.5 minutes of internal standard RT

Column used to flag values outside QC limits

FORM VIII 8260C

FORM VIII
GC/MS VOA INTERNAL STANDARD AREA AND RETENTION TIME SUMMARY

Lab Name: TestAmerica Canton Job No.: 240-81698-1

SDG No.:

Sample No.: ICIS 240-285694/6 Date Analyzed: 07/02/2017 06:26

Instrument ID: A3UX8 GC Column: DB-624 ID: 0.18(mm)

Lab File ID (Standard): UX80986.D Heated Purge: (Y/N) Y

Calibration ID: 40516

		FB		CBNZd5		DCBd4	
		AREA #	RT #	AREA #	RT #	AREA #	RT #
INITIAL CALIBRATION MID-POINT		1361984	5.16	987669	7.69	541078	9.88
UPPER LIMIT		2723968	5.66	1975338	8.19	1082156	10.38
LOWER LIMIT		680992	4.66	493835	7.19	270539	9.38
LAB SAMPLE ID	CLIENT SAMPLE ID						
ICV 240-285694/19		1395914	5.16	1031284	7.69	558972	9.88
ICV 240-285694/20		1332206	5.16	973080	7.69	526539	9.88
CCVIS 240-285711/4		1387729	5.16	1024585	7.69	572249	9.88

FB = Fluorobenzene
CBNZd5 = Chlorobenzene-d5
DCBd4 = 1,4-Dichlorobenzene-d4

Area Limit = 50%-200% of internal standard area
RT Limit = ± 0.5 minutes of internal standard RT

Column used to flag values outside QC limits

FORM VIII 8260C

FORM VIII
GC/MS VOA INTERNAL STANDARD AREA AND RETENTION TIME SUMMARY

Lab Name: TestAmerica Canton Job No.: 240-81698-1

SDG No.:

Sample No.: CCVIS 240-285711/4 Date Analyzed: 07/03/2017 02:26

Instrument ID: A3UX8 GC Column: DB-624 ID: 0.18(mm)

Lab File ID (Standard): UX81007.D Heated Purge: (Y/N) Y

Calibration ID: 40518

		FB		CBNZd5		DCBd4	
		AREA #	RT #	AREA #	RT #	AREA #	RT #
12/24 HOUR STD		1387729	5.16	1024585	7.69	572249	9.88
UPPER LIMIT		2775458	5.66	2049170	8.19	1144498	10.38
LOWER LIMIT		693865	4.66	512293	7.19	286125	9.38
LAB SAMPLE ID	CLIENT SAMPLE ID						
CCV 240-285711/5		1355219	5.16	979664	7.69	533534	9.88
LCS 240-285711/6		1363409	5.16	975552	7.69	540997	9.88
MB 240-285711/7		1378239	5.16	987634	7.69	534821	9.88
LCS 240-285711/8		1389749	5.16	1019628	7.69	553971	9.88
240-81733-B-18-D MS		1461989	5.16	1022431	7.69	491887	9.88
240-81733-B-18-E MSD		1450878	5.16	1030014	7.69	571115	9.88
240-81698-3	WC-FSOIL-062817	1437719	5.16	1034976	7.69	530437	9.88
240-81698-5	WC-SGEO-062817	1212651	5.16	865103	7.69	451065	9.88

FB = Fluorobenzene
CBNZd5 = Chlorobenzene-d5
DCBd4 = 1,4-Dichlorobenzene-d4

Area Limit = 50%-200% of internal standard area
RT Limit = ± 0.5 minutes of internal standard RT

Column used to flag values outside QC limits

FORM VIII 8260C

FORM I
GC/MS VOA ORGANICS ANALYSIS DATA SHEET

Lab Name: TestAmerica Canton | Job No.: 240-81698-1

SDG No.:

Client Sample ID: TB-062817 | Lab Sample ID: 240-81698-1

Matrix: Water | Lab File ID: UXM4244.D

Analysis Method: 8260C | Date Collected: 06/28/2017 00:00

Sample wt/vol: 5(mL) | Date Analyzed: 07/05/2017 13:13

Soil Aliquot Vol: | Dilution Factor: 1

Soil Extract Vol.: | GC Column: DB-624 ID: 0.18(mm)

% Moisture: | Level: (low/med) Low

Analysis Batch No.: 285874 | Units: ug/L

CAS NO.	COMPOUND NAME	RESULT	Q	RL	MDL
630-20-6	1,1,1,2-Tetrachloroethane	0.46	U	1.0	0.46
71-55-6	1,1,1-Trichloroethane	0.23	U	1.0	0.23
79-34-5	1,1,2,2-Tetrachloroethane	0.32	U	1.0	0.32
76-13-1	1,1,2-Trichloro-1,2,2-trifluoroethane	0.41	U	1.0	0.41
75-34-3	1,1-Dichloroethane	0.25	U	1.0	0.25
75-35-4	1,1-Dichloroethene	0.27	U	1.0	0.27
563-58-6	1,1-Dichloropropene	0.28	U	1.0	0.28
87-61-6	1,2,3-Trichlorobenzene	0.35	U	1.0	0.35
96-18-4	1,2,3-Trichloropropane	0.54	U	1.0	0.54
526-73-8	1,2,3-Trimethylbenzene	0.22	U	5.0	0.22
120-82-1	1,2,4-Trichlorobenzene	0.27	U	1.0	0.27
95-63-6	1,2,4-Trimethylbenzene	0.24	U	1.0	0.24
96-12-8	1,2-Dibromo-3-Chloropropane	0.47	U	2.0	0.47
95-50-1	1,2-Dichlorobenzene	0.26	U	1.0	0.26
107-06-2	1,2-Dichloroethane	0.30	U	1.0	0.30
78-87-5	1,2-Dichloropropane	0.30	U	1.0	0.30
541-73-1	1,3-Dichlorobenzene	0.32	U	1.0	0.32
142-28-9	1,3-Dichloropropane	0.29	U	1.0	0.29
106-46-7	1,4-Dichlorobenzene	0.23	U	1.0	0.23
594-20-7	2,2-Dichloropropane	0.34	U	1.0	0.34
78-93-3	2-Butanone (MEK)	1.0	U	10	1.0
110-75-8	2-Chloroethyl vinyl ether	0.65	U	10	0.65
95-49-8	2-Chlorotoluene	0.28	U	1.0	0.28
591-78-6	2-Hexanone	1.2	U	10	1.2
106-43-4	4-Chlorotoluene	0.23	U	1.0	0.23
99-87-6	p-Isopropyltoluene	0.29	U	1.0	0.29
108-10-1	4-Methyl-2-pentanone (MIBK)	0.71	U	10	0.71
67-64-1	Acetone	1.8	U	10	1.8
71-43-2	Benzene	0.28	U	1.0	0.28
108-86-1	Bromobenzene	0.31	U	1.0	0.31
75-25-2	Bromoform	0.43	U	1.0	0.43
74-83-9	Bromomethane	0.42	U	1.0	0.42
75-15-0	Carbon disulfide	0.34	U	1.0	0.34
56-23-5	Carbon tetrachloride	0.35	U	1.0	0.35
108-90-7	Chlorobenzene	0.32	U	1.0	0.32

FORM I
GC/MS VOA ORGANICS ANALYSIS DATA SHEET

Lab Name: TestAmerica Canton | Job No.: 240-81698-1
SDG No.:
Client Sample ID: TB-062817 | Lab Sample ID: 240-81698-1
Matrix: Water | Lab File ID: UXM4244.D
Analysis Method: 8260C | Date Collected: 06/28/2017 00:00
Sample wt/vol: 5(mL) | Date Analyzed: 07/05/2017 13:13
Soil Aliquot Vol: | Dilution Factor: 1
Soil Extract Vol.: | GC Column: DB-624 ID: 0.18(mm)
% Moisture: | Level: (low/med) Low
Analysis Batch No.: 285874 | Units: ug/L

CAS NO.	COMPOUND NAME	RESULT	Q	RL	MDL
124-48-1	Dibromochloromethane	0.25	U	1.0	0.25
75-00-3	Chloroethane	0.41	U	1.0	0.41
67-66-3	Chloroform	0.31	U	1.0	0.31
74-87-3	Chloromethane	0.43	U	1.0	0.43
156-59-2	cis-1,2-Dichloroethene	0.30	U	1.0	0.30
10061-01-5	cis-1,3-Dichloropropene	0.26	U	1.0	0.26
74-95-3	Dibromomethane	0.46	U	1.0	0.46
74-97-5	Bromochloromethane	0.47	U	1.0	0.47
75-71-8	Dichlorodifluoromethane	0.50	U	1.0	0.50
75-27-4	Bromodichloromethane	0.30	U	1.0	0.30
75-65-0	tert-Butyl alcohol (TBA)	4.6	U	50	4.6
100-41-4	Ethylbenzene	0.26	U	1.0	0.26
87-68-3	Hexachlorobutadiene	0.36	U	1.0	0.36
108-20-3	Diisopropyl ether	0.44	U	10	0.44
98-82-8	Isopropylbenzene	0.21	U	1.0	0.21
1634-04-4	Methyl tert-butyl ether	0.27	U	1.0	0.27
75-09-2	Methylene Chloride	0.53	U	1.0	0.53
179601-23-1	m-Xylene & p-Xylene	0.24	U	2.0	0.24
91-20-3	Naphthalene	0.25	U	1.0	0.25
104-51-8	n-Butylbenzene	0.21	U	1.0	0.21
103-65-1	N-Propylbenzene	0.45	U	1.0	0.45
95-47-6	o-Xylene	0.28	U	1.0	0.28
135-98-8	sec-Butylbenzene	0.27	U	1.0	0.27
100-42-5	Styrene	0.23	U	1.0	0.23
994-05-8	Tert-amyl methyl ether	0.29	U	5.0	0.29
637-92-3	Ethyl t-butyl ether	0.35	U	5.0	0.35
127-18-4	Tetrachloroethene	0.30	U	1.0	0.30
108-88-3	Toluene	0.23	U	1.0	0.23
156-60-5	trans-1,2-Dichloroethene	0.29	U	1.0	0.29
10061-02-6	trans-1,3-Dichloropropene	0.31	U	1.0	0.31
79-01-6	Trichloroethene	0.33	U	1.0	0.33
75-69-4	Trichlorofluoromethane	0.50	U	1.0	0.50
108-05-4	Vinyl acetate	0.28	U	2.0	0.28
75-01-4	Vinyl chloride	0.45	U	1.0	0.45
1330-20-7	Xylenes, Total	0.24	U	2.0	0.24
98-06-6	tert-Butylbenzene	0.26	U	1.0	0.26

FORM I
GC/MS VOA ORGANICS ANALYSIS DATA SHEET

Lab Name: TestAmerica Canton | Job No.: 240-81698-1

SDG No.:

Client Sample ID: TB-062817 | Lab Sample ID: 240-81698-1

Matrix: Water | Lab File ID: UXM4244.D

Analysis Method: 8260C | Date Collected: 06/28/2017 00:00

Sample wt/vol: 5(mL) | Date Analyzed: 07/05/2017 13:13

Soil Aliquot Vol: | Dilution Factor: 1

Soil Extract Vol.: | GC Column: DB-624 ID: 0.18(mm)

% Moisture: | Level: (low/med) Low

Analysis Batch No.: 285874 | Units: ug/L

CAS NO.	COMPOUND NAME	RESULT	Q	RL	MDL
106-93-4	1,2-Dibromoethane	0.23	U	1.0	0.23

CAS NO.	SURROGATE	%REC	Q	LIMITS
2037-26-5	Toluene-d8 (Surr)	104		73-120
1868-53-7	Dibromofluoromethane (Surr)	89		69-124
460-00-4	4-Bromofluorobenzene (Surr)	91		69-120
17060-07-0	1,2-Dichloroethane-d4 (Surr)	89		61-138

FORM I
GC/MS VOA ORGANICS ANALYSIS DATA SHEET

Lab Name: TestAmerica Canton | Job No.: 240-81698-1

SDG No.:

Client Sample ID: WC-FSOIL-062817 | Lab Sample ID: 240-81698-3

Matrix: Solid | Lab File ID: UX81026.D

Analysis Method: 8260C | Date Collected: 06/28/2017 08:40

Sample wt/vol: 5.16(g) | Date Analyzed: 07/03/2017 09:20

Soil Aliquot Vol: | Dilution Factor: 1

Soil Extract Vol.: | GC Column: DB-624 ID: 0.18(mm)

% Moisture: 15.3 | Level: (low/med) Low

Analysis Batch No.: 285711 | Units: ug/Kg

CAS NO.	COMPOUND NAME	RESULT	Q	RL	MDL
630-20-6	1,1,1,2-Tetrachloroethane	0.41	U	5.7	0.41
71-55-6	1,1,1-Trichloroethane	0.26	U	5.7	0.26
79-34-5	1,1,2,2-Tetrachloroethane	0.30	U	5.7	0.30
76-13-1	1,1,2-Trichloro-1,2,2-trifluoroethane	0.56	U	5.7	0.56
75-34-3	1,1-Dichloroethane	0.38	U	5.7	0.38
75-35-4	1,1-Dichloroethene	0.62	U	5.7	0.62
563-58-6	1,1-Dichloropropene	0.22	U	5.7	0.22
87-61-6	1,2,3-Trichlorobenzene	0.40	U	5.7	0.40
96-18-4	1,2,3-Trichloropropane	0.45	U	5.7	0.45
526-73-8	1,2,3-Trimethylbenzene	0.11	U	5.7	0.11
120-82-1	1,2,4-Trichlorobenzene	0.27	U	5.7	0.27
95-63-6	1,2,4-Trimethylbenzene	0.29	U	5.7	0.29
96-12-8	1,2-Dibromo-3-Chloropropane	0.78	U	11	0.78
95-50-1	1,2-Dichlorobenzene	0.25	U	5.7	0.25
107-06-2	1,2-Dichloroethane	0.33	U	5.7	0.33
78-87-5	1,2-Dichloropropane	0.35	U	5.7	0.35
541-73-1	1,3-Dichlorobenzene	0.33	U	5.7	0.33
142-28-9	1,3-Dichloropropane	0.26	U	5.7	0.26
106-46-7	1,4-Dichlorobenzene	0.40	U	5.7	0.40
594-20-7	2,2-Dichloropropane	0.34	U	5.7	0.34
78-93-3	2-Butanone (MEK)	1.5	U	23	1.5
110-75-8	2-Chloroethyl vinyl ether	3.2	U	57	3.2
95-49-8	2-Chlorotoluene	0.42	U	5.7	0.42
591-78-6	2-Hexanone	0.66	U	23	0.66
106-43-4	4-Chlorotoluene	0.27	U	5.7	0.27
99-87-6	p-Isopropyltoluene	0.21	U	5.7	0.21
108-10-1	4-Methyl-2-pentanone (MIBK)	1.0	U	23	1.0
67-64-1	Acetone	3.5	U	23	3.5
71-43-2	Benzene	0.37	U	5.7	0.37
108-86-1	Bromobenzene	0.31	U	5.7	0.31
75-25-2	Bromoform	0.46	U	5.7	0.46
74-83-9	Bromomethane	0.68	U	5.7	0.68
75-15-0	Carbon disulfide	0.24	U	5.7	0.24
56-23-5	Carbon tetrachloride	0.29	U	5.7	0.29
108-90-7	Chlorobenzene	0.55	J	5.7	0.38

FORM I
GC/MS VOA ORGANICS ANALYSIS DATA SHEET

Lab Name: TestAmerica Canton | Job No.: 240-81698-1
SDG No.:
Client Sample ID: WC-FSOIL-062817 | Lab Sample ID: 240-81698-3
Matrix: Solid | Lab File ID: UX81026.D
Analysis Method: 8260C | Date Collected: 06/28/2017 08:40
Sample wt/vol: 5.16(g) | Date Analyzed: 07/03/2017 09:20
Soil Aliquot Vol: | Dilution Factor: 1
Soil Extract Vol.: | GC Column: DB-624 ID: 0.18(mm)
% Moisture: 15.3 | Level: (low/med) Low
Analysis Batch No.: 285711 | Units: ug/Kg

CAS NO.	COMPOUND NAME	RESULT	Q	RL	MDL
124-48-1	Dibromochloromethane	0.34	U	5.7	0.34
75-00-3	Chloroethane	0.43	U	5.7	0.43
67-66-3	Chloroform	0.30	J	5.7	0.26
74-87-3	Chloromethane	0.43	U	5.7	0.43
156-59-2	cis-1,2-Dichloroethene	0.54	J	5.7	0.32
10061-01-5	cis-1,3-Dichloropropene	0.30	U	5.7	0.30
74-95-3	Dibromomethane	0.43	U	5.7	0.43
74-97-5	Bromochloromethane	0.41	U	5.7	0.41
75-71-8	Dichlorodifluoromethane	0.40	U	5.7	0.40
75-27-4	Bromodichloromethane	0.38	U	5.7	0.38
75-65-0	tert-Butyl alcohol (TBA)	2.7	U	230	2.7
100-41-4	Ethylbenzene	0.31	U	5.7	0.31
87-68-3	Hexachlorobutadiene	0.50	U	5.7	0.50
108-20-3	Diisopropyl ether	0.27	U	11	0.27
98-82-8	Isopropylbenzene	0.23	U	5.7	0.23
1634-04-4	Methyl tert-butyl ether	0.31	U	5.7	0.31
75-09-2	Methylene Chloride	0.27	U	5.7	0.27
179601-23-1	m-Xylene & p-Xylene	0.46	U	11	0.46
91-20-3	Naphthalene	0.38	U	5.7	0.38
104-51-8	n-Butylbenzene	0.29	U	5.7	0.29
103-65-1	N-Propylbenzene	0.32	U	5.7	0.32
95-47-6	o-Xylene	0.25	U	5.7	0.25
135-98-8	sec-Butylbenzene	0.22	U	5.7	0.22
100-42-5	Styrene	0.31	U	5.7	0.31
994-05-8	Tert-amyl methyl ether	0.24	U	5.7	0.24
637-92-3	Ethyl t-butyl ether	0.15	U	5.7	0.15
127-18-4	Tetrachloroethene	0.42	U	5.7	0.42
108-88-3	Toluene	0.39	U	5.7	0.39
156-60-5	trans-1,2-Dichloroethene	0.43	U	5.7	0.43
10061-02-6	trans-1,3-Dichloropropene	0.24	U	5.7	0.24
79-01-6	Trichloroethene	230		5.7	0.47
75-69-4	Trichlorofluoromethane	0.27	U	5.7	0.27
108-05-4	Vinyl acetate	1.0	U	11	1.0
75-01-4	Vinyl chloride	0.32	U	5.7	0.32
1330-20-7	Xylenes, Total	0.46	U	11	0.46
98-06-6	tert-Butylbenzene	0.24	U	5.7	0.24

FORM I
GC/MS VOA ORGANICS ANALYSIS DATA SHEET

Lab Name: TestAmerica Canton | Job No.: 240-81698-1

SDG No.:

Client Sample ID: WC-FSOIL-062817 | Lab Sample ID: 240-81698-3

Matrix: Solid | Lab File ID: UX81026.D

Analysis Method: 8260C | Date Collected: 06/28/2017 08:40

Sample wt/vol: 5.16(g) | Date Analyzed: 07/03/2017 09:20

Soil Aliquot Vol: | Dilution Factor: 1

Soil Extract Vol.: | GC Column: DB-624 ID: 0.18(mm)

% Moisture: 15.3 | Level: (low/med) Low

Analysis Batch No.: 285711 | Units: ug/Kg

CAS NO.	COMPOUND NAME	RESULT	Q	RL	MDL
106-93-4	1,2-Dibromoethane	0.40	U	5.7	0.40

CAS NO.	SURROGATE	%REC	Q	LIMITS
2037-26-5	Toluene-d8 (Surr)	96		66-125
1868-53-7	Dibromofluoromethane (Surr)	86		43-131
460-00-4	4-Bromofluorobenzene (Surr)	89		61-132
17060-07-0	1,2-Dichloroethane-d4 (Surr)	83		61-127

FORM I
GC/MS VOA ORGANICS ANALYSIS DATA SHEET

Lab Name: TestAmerica Canton | Job No.: 240-81698-1

SDG No.:

Client Sample ID: WC-FDCON-062817 | Lab Sample ID: 240-81698-4

Matrix: Water | Lab File ID: UXM4245.D

Analysis Method: 8260C | Date Collected: 06/28/2017 08:55

Sample wt/vol: 5(mL) | Date Analyzed: 07/05/2017 13:36

Soil Aliquot Vol: | Dilution Factor: 6.25

Soil Extract Vol.: | GC Column: DB-624 ID: 0.18(mm)

% Moisture: | Level: (low/med) Low

Analysis Batch No.: 285874 | Units: ug/L

CAS NO.	COMPOUND NAME	RESULT	Q	RL	MDL
630-20-6	1,1,1,2-Tetrachloroethane	2.9	U	6.3	2.9
71-55-6	1,1,1-Trichloroethane	1.4	U	6.3	1.4
79-34-5	1,1,2,2-Tetrachloroethane	2.0	U	6.3	2.0
76-13-1	1,1,2-Trichloro-1,2,2-trifluoroethane	2.6	U	6.3	2.6
75-34-3	1,1-Dichloroethane	1.6	U	6.3	1.6
75-35-4	1,1-Dichloroethene	1.7	U	6.3	1.7
563-58-6	1,1-Dichloropropene	1.8	U	6.3	1.8
87-61-6	1,2,3-Trichlorobenzene	2.2	U	6.3	2.2
96-18-4	1,2,3-Trichloropropane	3.4	U	6.3	3.4
526-73-8	1,2,3-Trimethylbenzene	1.4	U	31	1.4
120-82-1	1,2,4-Trichlorobenzene	1.7	U	6.3	1.7
95-63-6	1,2,4-Trimethylbenzene	1.5	U	6.3	1.5
96-12-8	1,2-Dibromo-3-Chloropropane	2.9	U	13	2.9
95-50-1	1,2-Dichlorobenzene	1.6	U	6.3	1.6
107-06-2	1,2-Dichloroethane	1.9	U	6.3	1.9
78-87-5	1,2-Dichloropropane	1.9	U	6.3	1.9
541-73-1	1,3-Dichlorobenzene	2.0	U	6.3	2.0
142-28-9	1,3-Dichloropropane	1.8	U	6.3	1.8
106-46-7	1,4-Dichlorobenzene	1.4	U	6.3	1.4
594-20-7	2,2-Dichloropropane	2.1	U	6.3	2.1
78-93-3	2-Butanone (MEK)	8.0	J B	63	6.4
110-75-8	2-Chloroethyl vinyl ether	4.1	U F1	63	4.1
95-49-8	2-Chlorotoluene	1.8	U	6.3	1.8
591-78-6	2-Hexanone	7.7	U	63	7.7
106-43-4	4-Chlorotoluene	1.4	U	6.3	1.4
99-87-6	p-Isopropyltoluene	1.8	U	6.3	1.8
108-10-1	4-Methyl-2-pentanone (MIBK)	4.4	U	63	4.4
67-64-1	Acetone	11	U	63	11
71-43-2	Benzene	1.8	U	6.3	1.8
108-86-1	Bromobenzene	1.9	U	6.3	1.9
75-25-2	Bromoform	2.7	U	6.3	2.7
74-83-9	Bromomethane	2.6	U	6.3	2.6
75-15-0	Carbon disulfide	2.1	U	6.3	2.1
56-23-5	Carbon tetrachloride	2.2	U	6.3	2.2
108-90-7	Chlorobenzene	2.0	U	6.3	2.0

FORM I
GC/MS VOA ORGANICS ANALYSIS DATA SHEET

Lab Name: TestAmerica Canton | Job No.: 240-81698-1

SDG No.:

Client Sample ID: WC-FDCON-062817 | Lab Sample ID: 240-81698-4

Matrix: Water | Lab File ID: UXM4245.D

Analysis Method: 8260C | Date Collected: 06/28/2017 08:55

Sample wt/vol: 5(mL) | Date Analyzed: 07/05/2017 13:36

Soil Aliquot Vol: | Dilution Factor: 6.25

Soil Extract Vol.: | GC Column: DB-624 ID: 0.18(mm)

% Moisture: | Level: (low/med) Low

Analysis Batch No.: 285874 | Units: ug/L

CAS NO.	COMPOUND NAME	RESULT	Q	RL	MDL
124-48-1	Dibromochloromethane	1.6	U	6.3	1.6
75-00-3	Chloroethane	2.6	U	6.3	2.6
67-66-3	Chloroform	13		6.3	1.9
74-87-3	Chloromethane	2.7	U	6.3	2.7
156-59-2	cis-1,2-Dichloroethene	8.1		6.3	1.9
10061-01-5	cis-1,3-Dichloropropene	1.6	U	6.3	1.6
74-95-3	Dibromomethane	2.9	U	6.3	2.9
74-97-5	Bromochloromethane	2.9	U	6.3	2.9
75-71-8	Dichlorodifluoromethane	3.1	U	6.3	3.1
75-27-4	Bromodichloromethane	1.9	U	6.3	1.9
75-65-0	tert-Butyl alcohol (TBA)	28	U	310	28
100-41-4	Ethylbenzene	1.6	U	6.3	1.6
87-68-3	Hexachlorobutadiene	2.3	U	6.3	2.3
108-20-3	Diisopropyl ether	2.8	U	63	2.8
98-82-8	Isopropylbenzene	1.3	U	6.3	1.3
1634-04-4	Methyl tert-butyl ether	3.5	J	6.3	1.7
75-09-2	Methylene Chloride	3.3	U	6.3	3.3
179601-23-1	m-Xylene & p-Xylene	1.5	U	13	1.5
91-20-3	Naphthalene	1.6	U	6.3	1.6
104-51-8	n-Butylbenzene	1.3	U	6.3	1.3
103-65-1	N-Propylbenzene	2.8	U	6.3	2.8
95-47-6	o-Xylene	1.8	U	6.3	1.8
135-98-8	sec-Butylbenzene	1.7	U	6.3	1.7
100-42-5	Styrene	1.4	U	6.3	1.4
994-05-8	Tert-amyl methyl ether	1.8	U	31	1.8
637-92-3	Ethyl t-butyl ether	2.2	U	31	2.2
127-18-4	Tetrachloroethene	1.9	U	6.3	1.9
108-88-3	Toluene	1.4	U	6.3	1.4
156-60-5	trans-1,2-Dichloroethene	1.8	U	6.3	1.8
10061-02-6	trans-1,3-Dichloropropene	1.9	U	6.3	1.9
79-01-6	Trichloroethene	320		6.3	2.1
75-69-4	Trichlorofluoromethane	3.1	U	6.3	3.1
108-05-4	Vinyl acetate	1.8	U	13	1.8
75-01-4	Vinyl chloride	2.8	U	6.3	2.8
1330-20-7	Xylenes, Total	1.5	U	13	1.5
98-06-6	tert-Butylbenzene	1.6	U	6.3	1.6

FORM I
GC/MS VOA ORGANICS ANALYSIS DATA SHEET

Lab Name: TestAmerica Canton | Job No.: 240-81698-1

SDG No.:

Client Sample ID: WC-FDCON-062817 | Lab Sample ID: 240-81698-4

Matrix: Water | Lab File ID: UXM4245.D

Analysis Method: 8260C | Date Collected: 06/28/2017 08:55

Sample wt/vol: 5(mL) | Date Analyzed: 07/05/2017 13:36

Soil Aliquot Vol: | Dilution Factor: 6.25

Soil Extract Vol.: | GC Column: DB-624 ID: 0.18(mm)

% Moisture: | Level: (low/med) Low

Analysis Batch No.: 285874 | Units: ug/L

CAS NO.	COMPOUND NAME	RESULT	Q	RL	MDL
106-93-4	1,2-Dibromoethane	1.4	U	6.3	1.4

CAS NO.	SURROGATE	%REC	Q	LIMITS
2037-26-5	Toluene-d8 (Surr)	106		73-120
1868-53-7	Dibromofluoromethane (Surr)	87		69-124
460-00-4	4-Bromofluorobenzene (Surr)	92		69-120
17060-07-0	1,2-Dichloroethane-d4 (Surr)	88		61-138

FORM I
GC/MS VOA ORGANICS ANALYSIS DATA SHEET

Lab Name: TestAmerica Canton | Job No.: 240-81698-1

SDG No.:

Client Sample ID: WC-SGEO-062817 | Lab Sample ID: 240-81698-5

Matrix: Solid | Lab File ID: UX81027.D

Analysis Method: 8260C | Date Collected: 06/28/2017 08:15

Sample wt/vol: 5.03(g) | Date Analyzed: 07/03/2017 09:42

Soil Aliquot Vol: | Dilution Factor: 1

Soil Extract Vol.: | GC Column: DB-624 ID: 0.18(mm)

% Moisture: 12.0 | Level: (low/med) Low

Analysis Batch No.: 285711 | Units: ug/Kg

CAS NO.	COMPOUND NAME	RESULT	Q	RL	MDL
630-20-6	1,1,1,2-Tetrachloroethane	0.41	U	5.6	0.41
71-55-6	1,1,1-Trichloroethane	0.26	U	5.6	0.26
79-34-5	1,1,2,2-Tetrachloroethane	0.29	U	5.6	0.29
76-13-1	1,1,2-Trichloro-1,2,2-trifluoroethane	0.55	U	5.6	0.55
75-34-3	1,1-Dichloroethane	0.37	U	5.6	0.37
75-35-4	1,1-Dichloroethene	0.61	U	5.6	0.61
563-58-6	1,1-Dichloropropene	0.21	U	5.6	0.21
87-61-6	1,2,3-Trichlorobenzene	0.40	U	5.6	0.40
96-18-4	1,2,3-Trichloropropane	0.44	U	5.6	0.44
526-73-8	1,2,3-Trimethylbenzene	0.11	U	5.6	0.11
120-82-1	1,2,4-Trichlorobenzene	0.27	U	5.6	0.27
95-63-6	1,2,4-Trimethylbenzene	0.37	J	5.6	0.28
96-12-8	1,2-Dibromo-3-Chloropropane	0.77	U	11	0.77
95-50-1	1,2-Dichlorobenzene	0.25	U	5.6	0.25
107-06-2	1,2-Dichloroethane	0.33	U	5.6	0.33
78-87-5	1,2-Dichloropropane	0.35	U	5.6	0.35
541-73-1	1,3-Dichlorobenzene	0.33	U	5.6	0.33
142-28-9	1,3-Dichloropropane	0.26	U	5.6	0.26
106-46-7	1,4-Dichlorobenzene	0.40	U	5.6	0.40
594-20-7	2,2-Dichloropropane	0.34	U	5.6	0.34
78-93-3	2-Butanone (MEK)	1.4	U	23	1.4
110-75-8	2-Chloroethyl vinyl ether	3.2	U	56	3.2
95-49-8	2-Chlorotoluene	0.42	U	5.6	0.42
591-78-6	2-Hexanone	0.66	U	23	0.66
106-43-4	4-Chlorotoluene	0.27	U	5.6	0.27
99-87-6	p-Isopropyltoluene	0.20	U	5.6	0.20
108-10-1	4-Methyl-2-pentanone (MIBK)	1.0	U	23	1.0
67-64-1	Acetone	5.2	J	23	3.5
71-43-2	Benzene	0.36	U	5.6	0.36
108-86-1	Bromobenzene	0.30	U	5.6	0.30
75-25-2	Bromoform	0.45	U	5.6	0.45
74-83-9	Bromomethane	0.67	U	5.6	0.67
75-15-0	Carbon disulfide	0.24	U	5.6	0.24
56-23-5	Carbon tetrachloride	0.28	U	5.6	0.28
108-90-7	Chlorobenzene	2.3	J	5.6	0.37

FORM I
GC/MS VOA ORGANICS ANALYSIS DATA SHEET

Lab Name: TestAmerica Canton | Job No.: 240-81698-1
SDG No.:
Client Sample ID: WC-SGEO-062817 | Lab Sample ID: 240-81698-5
Matrix: Solid | Lab File ID: UX81027.D
Analysis Method: 8260C | Date Collected: 06/28/2017 08:15
Sample wt/vol: 5.03(g) | Date Analyzed: 07/03/2017 09:42
Soil Aliquot Vol: | Dilution Factor: 1
Soil Extract Vol.: | GC Column: DB-624 ID: 0.18(mm)
% Moisture: 12.0 | Level: (low/med) Low
Analysis Batch No.: 285711 | Units: ug/Kg

CAS NO.	COMPOUND NAME	RESULT	Q	RL	MDL
124-48-1	Dibromochloromethane	0.34	U	5.6	0.34
75-00-3	Chloroethane	0.43	U	5.6	0.43
67-66-3	Chloroform	0.26	U	5.6	0.26
74-87-3	Chloromethane	0.43	U	5.6	0.43
156-59-2	cis-1,2-Dichloroethene	0.32	U	5.6	0.32
10061-01-5	cis-1,3-Dichloropropene	0.29	U	5.6	0.29
74-95-3	Dibromomethane	0.43	U	5.6	0.43
74-97-5	Bromochloromethane	0.41	U	5.6	0.41
75-71-8	Dichlorodifluoromethane	0.40	U	5.6	0.40
75-27-4	Bromodichloromethane	0.37	U	5.6	0.37
75-65-0	tert-Butyl alcohol (TBA)	2.7	U	230	2.7
100-41-4	Ethylbenzene	0.30	U	5.6	0.30
87-68-3	Hexachlorobutadiene	0.50	U	5.6	0.50
108-20-3	Diisopropyl ether	0.27	U	11	0.27
98-82-8	Isopropylbenzene	0.23	U	5.6	0.23
1634-04-4	Methyl tert-butyl ether	0.30	U	5.6	0.30
75-09-2	Methylene Chloride	0.27	U	5.6	0.27
179601-23-1	m-Xylene & p-Xylene	0.45	U	11	0.45
91-20-3	Naphthalene	1.0	J B	5.6	0.37
104-51-8	n-Butylbenzene	0.28	U	5.6	0.28
103-65-1	N-Propylbenzene	0.32	U	5.6	0.32
95-47-6	o-Xylene	0.25	U	5.6	0.25
135-98-8	sec-Butylbenzene	0.21	U	5.6	0.21
100-42-5	Styrene	0.30	U	5.6	0.30
994-05-8	Tert-amyl methyl ether	0.24	U	5.6	0.24
637-92-3	Ethyl t-butyl ether	0.15	U	5.6	0.15
127-18-4	Tetrachloroethene	0.42	U	5.6	0.42
108-88-3	Toluene	0.38	U	5.6	0.38
156-60-5	trans-1,2-Dichloroethene	0.43	U	5.6	0.43
10061-02-6	trans-1,3-Dichloropropene	0.24	U	5.6	0.24
79-01-6	Trichloroethene	0.46	U	5.6	0.46
75-69-4	Trichlorofluoromethane	0.27	U	5.6	0.27
108-05-4	Vinyl acetate	0.98	U	11	0.98
75-01-4	Vinyl chloride	0.32	U	5.6	0.32
1330-20-7	Xylenes, Total	0.45	U	11	0.45
98-06-6	tert-Butylbenzene	0.24	U	5.6	0.24

FORM I
GC/MS VOA ORGANICS ANALYSIS DATA SHEET

Lab Name: TestAmerica Canton | Job No.: 240-81698-1

SDG No.:

Client Sample ID: WC-SGEO-062817 | Lab Sample ID: 240-81698-5

Matrix: Solid | Lab File ID: UX81027.D

Analysis Method: 8260C | Date Collected: 06/28/2017 08:15

Sample wt/vol: 5.03(g) | Date Analyzed: 07/03/2017 09:42

Soil Aliquot Vol: | Dilution Factor: 1

Soil Extract Vol.: | GC Column: DB-624 ID: 0.18(mm)

% Moisture: 12.0 | Level: (low/med) Low

Analysis Batch No.: 285711 | Units: ug/Kg

CAS NO.	COMPOUND NAME	RESULT	Q	RL	MDL
106-93-4	1,2-Dibromoethane	0.40	U	5.6	0.40

CAS NO.	SURROGATE	%REC	Q	LIMITS
2037-26-5	Toluene-d8 (Surr)	91		66-125
1868-53-7	Dibromofluoromethane (Surr)	82		43-131
460-00-4	4-Bromofluorobenzene (Surr)	86		61-132
17060-07-0	1,2-Dichloroethane-d4 (Surr)	87		61-127

FORM I
GC/MS VOA ORGANICS ANALYSIS DATA SHEET

Lab Name: TestAmerica Canton | Job No.: 240-81698-1
SDG No.:
Client Sample ID: WC-WGEO-062817 | Lab Sample ID: 240-81698-6
Matrix: Water | Lab File ID: UXM4298.D
Analysis Method: 8260C | Date Collected: 06/28/2017 08:25
Sample wt/vol: 5(mL) | Date Analyzed: 07/06/2017 13:58
Soil Aliquot Vol: | Dilution Factor: 50
Soil Extract Vol.: | GC Column: DB-624 ID: 0.18(mm)
% Moisture: | Level: (low/med) Low
Analysis Batch No.: 286045 | Units: ug/L

CAS NO.	COMPOUND NAME	RESULT	Q	RL	MDL
630-20-6	1,1,1,2-Tetrachloroethane	23	U	50	23
71-55-6	1,1,1-Trichloroethane	12	U	50	12
79-34-5	1,1,2,2-Tetrachloroethane	16	U	50	16
76-13-1	1,1,2-Trichloro-1,2,2-trifluoroethane	21	U	50	21
75-34-3	1,1-Dichloroethane	13	U	50	13
75-35-4	1,1-Dichloroethene	14	U	50	14
563-58-6	1,1-Dichloropropene	14	U	50	14
87-61-6	1,2,3-Trichlorobenzene	18	U	50	18
96-18-4	1,2,3-Trichloropropane	27	U	50	27
526-73-8	1,2,3-Trimethylbenzene	11	U	250	11
120-82-1	1,2,4-Trichlorobenzene	14	U	50	14
95-63-6	1,2,4-Trimethylbenzene	19	J	50	12
96-12-8	1,2-Dibromo-3-Chloropropane	24	U	100	24
95-50-1	1,2-Dichlorobenzene	13	U	50	13
107-06-2	1,2-Dichloroethane	15	U	50	15
78-87-5	1,2-Dichloropropane	15	U	50	15
541-73-1	1,3-Dichlorobenzene	16	U	50	16
142-28-9	1,3-Dichloropropane	15	U	50	15
106-46-7	1,4-Dichlorobenzene	12	U	50	12
594-20-7	2,2-Dichloropropane	17	U	50	17
78-93-3	2-Butanone (MEK)	110	J	500	51
110-75-8	2-Chloroethyl vinyl ether	33	U	500	33
95-49-8	2-Chlorotoluene	14	U	50	14
591-78-6	2-Hexanone	62	U	500	62
106-43-4	4-Chlorotoluene	12	U	50	12
99-87-6	p-Isopropyltoluene	15	U	50	15
108-10-1	4-Methyl-2-pentanone (MIBK)	36	U	500	36
67-64-1	Acetone	2300		500	88
71-43-2	Benzene	14	U	50	14
108-86-1	Bromobenzene	16	U	50	16
75-25-2	Bromoform	22	U	50	22
74-83-9	Bromomethane	21	U	50	21
75-15-0	Carbon disulfide	17	U	50	17
56-23-5	Carbon tetrachloride	18	U	50	18
108-90-7	Chlorobenzene	16	U	50	16

FORM I
GC/MS VOA ORGANICS ANALYSIS DATA SHEET

Lab Name: TestAmerica Canton | Job No.: 240-81698-1
SDG No.:
Client Sample ID: WC-WGEO-062817 | Lab Sample ID: 240-81698-6
Matrix: Water | Lab File ID: UXM4298.D
Analysis Method: 8260C | Date Collected: 06/28/2017 08:25
Sample wt/vol: 5(mL) | Date Analyzed: 07/06/2017 13:58
Soil Aliquot Vol: | Dilution Factor: 50
Soil Extract Vol.: | GC Column: DB-624 ID: 0.18(mm)
% Moisture: | Level: (low/med) Low
Analysis Batch No.: 286045 | Units: ug/L

CAS NO.	COMPOUND NAME	RESULT	Q	RL	MDL
124-48-1	Dibromochloromethane	13	U	50	13
75-00-3	Chloroethane	21	U	50	21
67-66-3	Chloroform	16	U	50	16
74-87-3	Chloromethane	22	U	50	22
156-59-2	cis-1,2-Dichloroethene	15	U	50	15
10061-01-5	cis-1,3-Dichloropropene	13	U	50	13
74-95-3	Dibromomethane	23	U	50	23
74-97-5	Bromochloromethane	24	U	50	24
75-71-8	Dichlorodifluoromethane	25	U	50	25
75-27-4	Bromodichloromethane	15	U	50	15
75-65-0	tert-Butyl alcohol (TBA)	230	U	2500	230
100-41-4	Ethylbenzene	13	U	50	13
87-68-3	Hexachlorobutadiene	18	U	50	18
108-20-3	Diisopropyl ether	22	U	500	22
98-82-8	Isopropylbenzene	11	U	50	11
1634-04-4	Methyl tert-butyl ether	14	U	50	14
75-09-2	Methylene Chloride	27	U	50	27
179601-23-1	m-Xylene & p-Xylene	12	U	100	12
91-20-3	Naphthalene	13	U	50	13
104-51-8	n-Butylbenzene	11	U	50	11
103-65-1	N-Propylbenzene	23	U	50	23
95-47-6	o-Xylene	14	U	50	14
135-98-8	sec-Butylbenzene	14	U	50	14
100-42-5	Styrene	12	U	50	12
994-05-8	Tert-amyl methyl ether	15	U	250	15
637-92-3	Ethyl t-butyl ether	18	U	250	18
127-18-4	Tetrachloroethene	15	U	50	15
108-88-3	Toluene	130		50	12
156-60-5	trans-1,2-Dichloroethene	15	U	50	15
10061-02-6	trans-1,3-Dichloropropene	16	U	50	16
79-01-6	Trichloroethene	17	U	50	17
75-69-4	Trichlorofluoromethane	25	U	50	25
108-05-4	Vinyl acetate	14	U	100	14
75-01-4	Vinyl chloride	23	U	50	23
1330-20-7	Xylenes, Total	12	U	100	12
98-06-6	tert-Butylbenzene	13	U	50	13

FORM I
GC/MS VOA ORGANICS ANALYSIS DATA SHEET

Lab Name: TestAmerica Canton | Job No.: 240-81698-1

SDG No.:

Client Sample ID: WC-WGEO-062817 | Lab Sample ID: 240-81698-6

Matrix: Water | Lab File ID: UXM4298.D

Analysis Method: 8260C | Date Collected: 06/28/2017 08:25

Sample wt/vol: 5(mL) | Date Analyzed: 07/06/2017 13:58

Soil Aliquot Vol: | Dilution Factor: 50

Soil Extract Vol.: | GC Column: DB-624 ID: 0.18(mm)

% Moisture: | Level: (low/med) Low

Analysis Batch No.: 286045 | Units: ug/L

CAS NO.	COMPOUND NAME	RESULT	Q	RL	MDL
106-93-4	1,2-Dibromoethane	12	U	50	12

CAS NO.	SURROGATE	%REC	Q	LIMITS
2037-26-5	Toluene-d8 (Surr)	99		73-120
1868-53-7	Dibromofluoromethane (Surr)	86		69-124
460-00-4	4-Bromofluorobenzene (Surr)	89		69-120
17060-07-0	1,2-Dichloroethane-d4 (Surr)	84		61-138

FORM VI
GC/MS VOA BY INTERNAL STANDARD - INITIAL CALIBRATION DATA
CURVE EVALUATION

Lab Name: TestAmerica Canton Job No.: 240-81698-1 Analy Batch No.: 272263

SDG No.:

Instrument ID: A3UX16 GC Column: DB-624 ID: 0.18(mm) Heated Purge: (Y/N) N

Calibration Start Date: 03/29/2017 14:02 Calibration End Date: 03/29/2017 15:56 Calibration ID: 39180

Calibration Files:

LEVEL:	LAB SAMPLE ID:	LAB FILE ID:
Level 1	STD8260 240-272263/6	UXM1388.D
Level 2	STD8260 240-272263/7	UXM1389.D
Level 3	STD8260 240-272263/8	UXM1390.D
Level 4	ICIS 240-272263/9	UXM1391.D
Level 5	STD8260 240-272263/10	UXM1392.D
Level 6	STD8260 240-272263/11	UXM1393.D

ANALYTE	RRF					CURVE TYPE	COEFFICIENT			#	MIN RRF	%RSD	#	MAX %RSD	R^2 OR COD	#	MIN R^2 OR COD
	LVL 1 LVL 6	LVL 2	LVL 3	LVL 4	LVL 5		B	M1	M2								
Dichlorodifluoromethane	0.2774 0.3284	0.2911	0.3262	0.3261	0.3503	Ave		0.3166			0.1000	8.5		20.0			
Chloromethane	0.4243 0.3631	0.3916	0.3790	0.3773	0.3916	Ave		0.3878			0.1000	5.4		20.0			
Vinyl chloride	0.4087 0.3605	0.3465	0.3612	0.3711	0.3829	Ave		0.3718			0.1000	5.8		20.0			
Butadiene	0.2591 0.3141	0.2556	0.2954	0.3159	0.3217	Ave		0.2937				10.0		20.0			
Bromomethane	0.2462 0.2319	0.2336	0.2325	0.2219	0.2327	Ave		0.2332			0.0500	3.3		20.0			
Chloroethane	0.2194 0.2239	0.1843	0.2273	0.2249	0.2316	Ave		0.2186			0.0500	7.9		20.0			
Dichlorofluoromethane	0.6271 0.5827	0.5458	0.5988	0.5826	0.6147	Ave		0.5919				4.8		20.0			
Trichlorofluoromethane	0.3569 0.4333	0.3855	0.4259	0.4347	0.4592	Ave		0.4159			0.1000	9.0		20.0			
Ethyl ether	0.2759 0.2366	0.2379	0.2543	0.2398	0.2563	Ave		0.2501				6.1		20.0			
Acrolein	0.0384 0.0319	0.0312	0.0336	0.0327	0.0346	Ave		0.0337				7.6		20.0			
1,1-Dichloroethene	0.3099 0.2842	0.2647	0.2795	0.2888	0.2999	Ave		0.2878			0.1000	5.5		20.0			
Acetone	+++++ 0.0788	0.1310	0.0907	0.0866	0.0925	Lin1	0.1043	0.0835			0.0100				0.9940		0.9900
1,1,2-Trichloro-1,2,2-trifluoroethane	0.0921 0.1845	0.1404	0.1678	0.1754	0.1718	Lin1	-0.045	0.1793			0.0500				0.9990		0.9900
Iodomethane	0.4817 0.4537	0.4441	0.4516	0.4592	0.4825	Ave		0.4621				3.5		20.0			
Carbon disulfide	1.0384 0.9437	0.8950	0.9260	0.9397	0.9657	Ave		0.9514			0.1000	5.1		20.0			

Note: The M1 coefficient is the same as Ave RRF for an Ave curve type.

FORM VI
GC/MS VOA BY INTERNAL STANDARD - INITIAL CALIBRATION DATA
CURVE EVALUATION

Lab Name: TestAmerica Canton Job No.: 240-81698-1 Analy Batch No.: 272263

SDG No.:

Instrument ID: A3UX16 GC Column: DB-624 ID: 0.18(mm) Heated Purge: (Y/N) N

Calibration Start Date: 03/29/2017 14:02 Calibration End Date: 03/29/2017 15:56 Calibration ID: 39180

ANALYTE	RRF					CURVE TYPE	COEFFICIENT			#	MIN RRF	%RSD	#	MAX %RSD	R^2 OR COD	#	MIN R^2 OR COD
	LVL 1 LVL 6	LVL 2	LVL 3	LVL 4	LVL 5		B	M1	M2								
3-Chloro-1-propene	0.2088 0.1945	0.1889	0.2169	0.1917	0.2068	Ave		0.2013				5.5		20.0			
Methyl acetate	0.1785 0.1542	0.1585	0.1607	0.1601	0.1623	Ave		0.1624			0.1000	5.1		20.0			
Methylene Chloride	+++++ 0.3133	0.8626	0.3413	0.3195	0.3388	Lin1	0.5333	0.3080			0.1000				0.9980		0.9900
tert-Butyl alcohol (TBA)	0.0315 0.0189	0.0213	0.0195	0.0198	0.0198	Lin1	0.0481	0.0192							0.9990		0.9900
Acrylonitrile	0.0953 0.0828	0.0857	0.0840	0.0837	0.0870	Ave		0.0864				5.4		20.0			
trans-1,2-Dichloroethene	0.3210 0.3162	0.2997	0.3159	0.3101	0.3333	Ave		0.3161			0.1000	3.5		20.0			
Methyl tert-butyl ether	0.8745 0.8162	0.7894	0.8187	0.8126	0.8733	Ave		0.8308			0.1000	4.2		20.0			
Hexane	0.2939 0.2948	0.2970	0.2722	0.2810	0.2994	Ave		0.2897				3.7		20.0			
1,1-Dichloroethane	0.5521 0.5175	0.4733	0.5210	0.5179	0.5529	Ave		0.5224			0.2000	5.6		20.0			
Vinyl acetate	0.4516 0.4009	0.3877	0.4037	0.3918	0.4198	Ave		0.4093				5.8		20.0			
2,2-Dichloropropane	0.3794 0.3532	0.3453	0.3576	0.3513	0.3722	Ave		0.3598				3.7		20.0			
2-Butanone (MEK)	0.1322 0.0875	0.0867	0.0946	0.0931	0.0992	Ave		0.0989			0.0100	17.1		20.0			
cis-1,2-Dichloroethene	0.3587 0.3537	0.3367	0.3467	0.3429	0.3721	Ave		0.3518			0.1000	3.6		20.0			
Bromochloromethane	0.1291 0.1502	0.1431	0.1505	0.1467	0.1612	Ave		0.1468				7.2		20.0			
Tetrahydrofuran	+++++ 0.0556	0.0583	0.0569	0.0577	0.0598	Ave		0.0577				2.7		20.0			
Chloroform	0.5471 0.5284	0.5180	0.5158	0.5179	0.5629	Ave		0.5317			0.2000	3.6		20.0			
1,1,1-Trichloroethane	0.4142 0.4390	0.4248	0.4405	0.4404	0.4618	Ave		0.4368			0.1000	3.7		20.0			
Cyclohexane	0.4351 0.4326	0.4108	0.4111	0.4328	0.4318	Ave		0.4257			0.1000	2.7		20.0			
1,1-Dichloropropene	0.3936 0.4033	0.3495	0.3997	0.4002	0.4212	Ave		0.3946				6.1		20.0			
Carbon tetrachloride	0.3835 0.3598	0.3382	0.3513	0.3550	0.3753	Ave		0.3605			0.1000	4.6		20.0			

Note: The M1 coefficient is the same as Ave RRF for an Ave curve type.

FORM VI
GC/MS VOA BY INTERNAL STANDARD - INITIAL CALIBRATION DATA
CURVE EVALUATION

Lab Name: TestAmerica Canton Job No.: 240-81698-1 Analy Batch No.: 272263

SDG No.:

Instrument ID: A3UX16 GC Column: DB-624 ID: 0.18(mm) Heated Purge: (Y/N) N

Calibration Start Date: 03/29/2017 14:02 Calibration End Date: 03/29/2017 15:56 Calibration ID: 39180

ANALYTE	RRF					CURVE TYPE	COEFFICIENT			#	MIN RRF	%RSD	#	MAX %RSD	R^2 OR COD	#	MIN R^2 OR COD
	LVL 1 LVL 6	LVL 2	LVL 3	LVL 4	LVL 5		B	M1	M2								
Isobutyl alcohol	0.0065 0.0062	0.0053	0.0067	0.0067	0.0067	Ave		0.0063				8.6		20.0			
Benzene	1.3724 1.2227	1.1219	1.2218	1.2050	1.2842	Ave		1.2380			0.5000	6.8		20.0			
1,2-Dichloroethane	0.3910 0.3932	0.3705	0.4014	0.3955	0.4214	Ave		0.3955			0.1000	4.2		20.0			
n-Heptane	+++++ 0.1323	0.7828	0.1743	0.1452	0.1373	Lin1	0.6515	0.1191							0.9980		0.9900
Trichloroethene	0.3404 0.3089	0.2946	0.3129	0.3013	0.3193	Ave		0.3129			0.1500	5.1		20.0			
Methylcyclohexane	0.3962 0.4020	0.4164	0.3842	0.3811	0.4140	Ave		0.3990			0.1000	3.7		20.0			
1,2-Dichloropropane	0.2659 0.2739	0.2677	0.2805	0.2770	0.2933	Ave		0.2764			0.1000	3.6		20.0			
Dibromomethane	0.1841 0.1580	0.1557	0.1636	0.1609	0.1664	Ave		0.1648				6.2		20.0			
1,4-Dioxane	0.0022 0.0024	0.0021	0.0025	0.0025	0.0025	Ave		0.0024				6.7		20.0			
Bromodichloromethane	0.3832 0.3821	0.3551	0.3780	0.3743	0.4067	Ave		0.3799			0.1500	4.4		20.0			
2-Chloroethyl vinyl ether	0.1585 0.1357	0.1250	0.1429	0.1377	0.1476	Ave		0.1413				8.0		20.0			
cis-1,3-Dichloropropene	0.4496 0.4653	0.4268	0.4592	0.4537	0.4927	Ave		0.4579			0.1500	4.7		20.0			
4-Methyl-2-pentanone (MIBK)	0.2293 0.1854	0.2069	0.2005	0.2004	0.2030	Ave		0.2043			0.0500	7.0		20.0			
Toluene	1.5034 1.5997	1.3726	1.5269	1.5051	1.6319	Ave		1.5233			0.4000	6.0		20.0			
trans-1,3-Dichloropropene	0.4548 0.4818	0.4333	0.4674	0.4569	0.4997	Ave		0.4656			0.1000	5.0		20.0			
Ethyl methacrylate	0.3803 0.3740	0.3185	0.3922	0.3811	0.3898	Ave		0.3726				7.3		20.0			
1,1,2-Trichloroethane	0.2635 0.2687	0.2498	0.2723	0.2568	0.2811	Ave		0.2654			0.1000	4.2		20.0			
1,3-Dichloropropane	0.5065 0.4731	0.4472	0.4815	0.4621	0.4985	Ave		0.4781				4.6		20.0			
Tetrachloroethene	0.2542 0.2756	0.2173	0.2564	0.2573	0.2785	Ave		0.2566			0.1500	8.5		20.0			
2-Hexanone	0.2078 0.1535	0.1472	0.1718	0.1662	0.1729	Ave		0.1699			0.0500	12.5		20.0			

Note: The M1 coefficient is the same as Ave RRF for an Ave curve type.

FORM VI
GC/MS VOA BY INTERNAL STANDARD - INITIAL CALIBRATION DATA
CURVE EVALUATION

Lab Name: TestAmerica Canton Job No.: 240-81698-1 Analy Batch No.: 272263

SDG No.:

Instrument ID: A3UX16 GC Column: DB-624 ID: 0.18(mm) Heated Purge: (Y/N) N

Calibration Start Date: 03/29/2017 14:02 Calibration End Date: 03/29/2017 15:56 Calibration ID: 39180

ANALYTE	RRF					CURVE TYPE	COEFFICIENT			#	MIN RRF	%RSD	#	MAX %RSD	R^2 OR COD	#	MIN R^2 OR COD
	LVL 1 LVL 6	LVL 2	LVL 3	LVL 4	LVL 5		B	M1	M2								
Dibromochloromethane	0.2932 0.3159	0.2671	0.2991	0.3025	0.3261	Ave		0.3007				6.8		20.0			
1,2-Dibromoethane	0.2219 0.2665	0.2582	0.2665	0.2598	0.2776	Ave		0.2584				7.4		20.0			
Chlorobenzene	1.0529 0.9678	0.8811	0.9699	0.9300	1.0081	Ave		0.9683			0.3000	6.2		20.0			
1,1,1,2-Tetrachloroethane	0.3063 0.3556	0.3094	0.3415	0.3391	0.3631	Ave		0.3358				7.0		20.0			
Ethylbenzene	0.4877 0.5488	0.4527	0.5317	0.5213	0.5696	Ave		0.5186				8.2		20.0			
m-Xylene & p-Xylene	0.6411 0.6835	0.5972	0.6660	0.6424	0.7068	Ave		0.6562				5.8		20.0			
o-Xylene	0.6365 0.7126	0.5894	0.6714	0.6629	0.7222	Ave		0.6658				7.4		20.0			
Styrene	1.1100 1.1992	0.9655	1.1476	1.1234	1.2429	Ave		1.1314			0.3000	8.4		20.0			
Bromoform	+++++ 0.1965	0.1499	0.1847	0.1835	0.2004	Ave		0.1830			0.1000	10.9		20.0			
Isopropylbenzene	1.5431 1.7556	1.4920	1.6914	1.6192	1.7882	Ave		1.6482			0.1000	7.1		20.0			
1,1,2,2-Tetrachloroethane	0.6083 0.5668	0.5706	0.5874	0.5668	0.5898	Ave		0.5816			0.3000	2.8		20.0			
Bromobenzene	0.7214 0.6938	0.6411	0.6888	0.6748	0.7324	Ave		0.6921				4.7		20.0			
1,2,3-Trichloropropane	0.1987 0.1777	0.1412	0.1899	0.1788	0.1886	Ave		0.1791				11.2		20.0			
trans-1,4-Dichloro-2-butene	+++++ 0.1649	0.1477	0.1661	0.1620	0.1691	Ave		0.1620				5.2		20.0			
N-Propylbenzene	0.6918 0.7372	0.6194	0.7268	0.7170	0.7728	Ave		0.7108				7.3		20.0			
2-Chlorotoluene	0.5891 0.6524	0.6072	0.6547	0.6350	0.6848	Ave		0.6372				5.4		20.0			
1,3,5-Trimethylbenzene	2.0957 2.3598	2.0166	2.3008	2.2541	2.4702	Ave		2.2495				7.5		20.0			
4-Chlorotoluene	0.6633 0.6930	0.6450	0.6920	0.6739	0.7178	Ave		0.6808				3.8		20.0			
tert-Butylbenzene	1.7635 1.9140	1.6247	1.8363	1.8095	2.0418	Ave		1.8316				7.7		20.0			
1,2,4-Trimethylbenzene	2.3247 2.5091	2.1504	2.4221	2.3653	2.6095	Ave		2.3968				6.6		20.0			

Note: The M1 coefficient is the same as Ave RRF for an Ave curve type.

FORM VI
GC/MS VOA BY INTERNAL STANDARD - INITIAL CALIBRATION DATA
CURVE EVALUATION

Lab Name: TestAmerica Canton Job No.: 240-81698-1 Analy Batch No.: 272263

SDG No.:

Instrument ID: A3UX16 GC Column: DB-624 ID: 0.18(mm) Heated Purge: (Y/N) N

Calibration Start Date: 03/29/2017 14:02 Calibration End Date: 03/29/2017 15:56 Calibration ID: 39180

ANALYTE	RRF					CURVE TYPE	COEFFICIENT			#	MIN RRF	%RSD	#	MAX %RSD	R^2 OR COD	#	MIN R^2 OR COD
	LVL 1 LVL 6	LVL 2	LVL 3	LVL 4	LVL 5		B	M1	M2								
sec-Butylbenzene	2.5150 2.6729	2.2201	2.4881	2.5159	2.6914	Ave		2.5172				6.7		20.0			
1,3-Dichlorobenzene	1.4670 1.3679	1.2338	1.3477	1.3117	1.4211	Ave		1.3582			0.6000	6.0		20.0			
p-Isopropyltoluene	2.1129 2.3459	1.8695	2.2357	2.2077	2.3896	Ave		2.1935				8.5		20.0			
1,4-Dichlorobenzene	1.4955 1.4123	1.3794	1.3886	1.3663	1.4845	Ave		1.4211			0.5000	3.9		20.0			
n-Butylbenzene	1.7339 1.9743	1.5905	1.8048	1.8379	1.9843	Ave		1.8210				8.2		20.0			
1,2-Dichlorobenzene	1.2562 1.3098	1.1778	1.2902	1.2925	1.3695	Ave		1.2827			0.4000	4.9		20.0			
1,2-Dibromo-3-Chloropropane	+++++ 0.1052	0.0364	0.0995	0.1035	0.1060	Lin1	-0.070	0.1069			0.0500				1.0000		0.9900
1,2,4-Trichlorobenzene	0.6877 0.6736	0.5503	0.6622	0.6682	0.6940	Ave		0.6560			0.2000	8.1		20.0			
Hexachlorobutadiene	0.2877 0.2599	0.2632	0.2675	0.2544	0.2579	Ave		0.2651				4.5		20.0			
Naphthalene	1.6027 1.5994	1.4701	1.5619	1.6108	1.6507	Ave		1.5826				3.9		20.0			
1,2,3-Trichlorobenzene	0.6150 0.5347	0.5152	0.5434	0.5219	0.5373	Ave		0.5446				6.6		20.0			
Dibromofluoromethane (Surr)	+++++ 0.2685	0.2395	0.2729	0.2637	0.2857	Ave		0.2661				6.4		20.0			
1,2-Dichloroethane-d4 (Surr)	+++++ 0.3228	0.3015	0.3260	0.3254	0.3428	Ave		0.3237				4.5		20.0			
Toluene-d8 (Surr)	+++++ 1.3214	1.1456	1.2974	1.2474	1.3716	Ave		1.2767				6.7		20.0			
4-Bromofluorobenzene (Surr)	+++++ 0.5071	0.4952	0.5030	0.4775	0.5277	Ave		0.5021				3.6		20.0			

Note: The M1 coefficient is the same as Ave RRF for an Ave curve type.

FORM VI
GC/MS VOA BY INTERNAL STANDARD - INITIAL CALIBRATION DATA
RESPONSE AND CONCENTRATION

Lab Name: TestAmerica Canton Job No.: 240-81698-1 Analy Batch No.: 272263

SDG No.:

Instrument ID: A3UX16 GC Column: DB-624 ID: 0.18(mm) Heated Purge: (Y/N) N

Calibration Start Date: 03/29/2017 14:02 Calibration End Date: 03/29/2017 15:56 Calibration ID: 39180

Calibration Files:

LEVEL:	LAB SAMPLE ID:	LAB FILE ID:
Level 1	STD8260 240-272263/6	UXM1388.D
Level 2	STD8260 240-272263/7	UXM1389.D
Level 3	STD8260 240-272263/8	UXM1390.D
Level 4	ICIS 240-272263/9	UXM1391.D
Level 5	STD8260 240-272263/10	UXM1392.D
Level 6	STD8260 240-272263/11	UXM1393.D

ANALYTE	IS REF	CURVE TYPE	RESPONSE					CONCENTRATION (UG/L)				
			LVL 1 LVL 6	LVL 2	LVL 3	LVL 4	LVL 5	LVL 1 LVL 6	LVL 2	LVL 3	LVL 4	LVL 5
Dichlorodifluoromethane	FB	Ave	5179 847120	11017	128360	253224	550892	0.500 60.0	1.00	10.0	20.0	40.0
Chloromethane	FB	Ave	7922 936755	14820	149125	293002	615885	0.500 60.0	1.00	10.0	20.0	40.0
Vinyl chloride	FB	Ave	7630 930046	13114	142124	288166	602218	0.500 60.0	1.00	10.0	20.0	40.0
Butadiene	FB	Ave	4838 810331	9674	116239	245302	505876	0.500 60.0	1.00	10.0	20.0	40.0
Bromomethane	FB	Ave	4597 598347	8841	91460	172325	365990	0.500 60.0	1.00	10.0	20.0	40.0
Chloroethane	FB	Ave	4096 577536	6974	89417	174639	364276	0.500 60.0	1.00	10.0	20.0	40.0
Dichlorofluoromethane	FB	Ave	11708 1503160	20654	235601	452370	966660	0.500 60.0	1.00	10.0	20.0	40.0
Trichlorofluoromethane	FB	Ave	6664 1117927	14588	167580	337517	722089	0.500 60.0	1.00	10.0	20.0	40.0
Ethyl ether	FB	Ave	5151 610299	9003	100039	186234	403120	0.500 60.0	1.00	10.0	20.0	40.0
Acrolein	FB	Ave	3583 411959	5902	66140	127012	271894	2.50 300	5.00	50.0	100	200
1,1-Dichloroethene	FB	Ave	5786 733110	10015	109963	224216	471677	0.500 60.0	1.00	10.0	20.0	40.0
Acetone	FB	Lin1	+++++ 406505	9915	71393	134509	291061	+++++ 120	2.00	20.0	40.0	80.0
1,1,2-Trichloro-1,2,2-trifluoroetha ne	FB	Lin1	1719 475836	5314	66002	136175	270113	0.500 60.0	1.00	10.0	20.0	40.0
Iodomethane	FB	Ave	8993 1170460	16807	177685	356561	758795	0.500 60.0	1.00	10.0	20.0	40.0
Carbon disulfide	FB	Ave	19388 2434531	33870	364318	729668	1518632	0.500 60.0	1.00	10.0	20.0	40.0
3-Chloro-1-propene	FB	Ave	3898 501808	7147	85345	148857	325226	0.500 60.0	1.00	10.0	20.0	40.0

FORM VI
GC/MS VOA BY INTERNAL STANDARD - INITIAL CALIBRATION DATA
RESPONSE AND CONCENTRATION

Lab Name: TestAmerica Canton Job No.: 240-81698-1 Analy Batch No.: 272263

SDG No.:

Instrument ID: A3UX16 GC Column: DB-624 ID: 0.18(mm) Heated Purge: (Y/N) N

Calibration Start Date: 03/29/2017 14:02 Calibration End Date: 03/29/2017 15:56 Calibration ID: 39180

ANALYTE	IS REF	CURVE TYPE	RESPONSE					CONCENTRATION (UG/L)				
			LVL 1 LVL 6	LVL 2	LVL 3	LVL 4	LVL 5	LVL 1 LVL 6	LVL 2	LVL 3	LVL 4	LVL 5
Methyl acetate	FB	Ave	16660 1988424	29982	316228	621600	1276312	2.50 300	5.00	50.0	100	200
Methylene Chloride	FB	Lin1	+++++ 808307	32644	134304	248096	532778	+++++ 60.0	1.00	10.0	20.0	40.0
tert-Butyl alcohol (TBA)	FB	Lin1	5873 488818	8043	76560	153795	312048	5.00 600	10.0	100	200	400
Acrylonitrile	FB	Ave	17798 2135402	32438	330543	649564	1367386	5.00 600	10.0	100	200	400
trans-1,2-Dichloroethene	FB	Ave	5994 815699	11343	124281	240825	524179	0.500 60.0	1.00	10.0	20.0	40.0
Methyl tert-butyl ether	FB	Ave	16327 2105680	29872	322103	631005	1373337	0.500 60.0	1.00	10.0	20.0	40.0
Hexane	FB	Ave	5487 760574	11238	107113	218153	470888	0.500 60.0	1.00	10.0	20.0	40.0
1,1-Dichloroethane	FB	Ave	10307 1334943	17911	204999	402129	869459	0.500 60.0	1.00	10.0	20.0	40.0
Vinyl acetate	FB	Ave	8432 1034200	14672	158843	304201	660178	0.500 60.0	1.00	10.0	20.0	40.0
2,2-Dichloropropane	FB	Ave	7083 911074	13066	140701	272751	585273	0.500 60.0	1.00	10.0	20.0	40.0
2-Butanone (MEK)	FB	Ave	4935 451516	6565	74473	144524	312018	1.00 120	2.00	20.0	40.0	80.0
cis-1,2-Dichloroethene	FB	Ave	6697 912453	12740	136411	266288	585132	0.500 60.0	1.00	10.0	20.0	40.0
Bromochloromethane	FB	Ave	2410 387412	5415	59207	113893	253511	0.500 60.0	1.00	10.0	20.0	40.0
Tetrahydrofuran	FB	Ave	+++++ 286982	4411	44754	89633	188065	+++++ 120	2.00	20.0	40.0	80.0
Chloroform	FB	Ave	10215 1363021	19603	202957	402177	885179	0.500 60.0	1.00	10.0	20.0	40.0
1,1,1-Trichloroethane	FB	Ave	7733 1132620	16074	173321	341980	726229	0.500 60.0	1.00	10.0	20.0	40.0
Cyclohexane	FB	Ave	8124 1115970	15546	161743	336024	679066	0.500 60.0	1.00	10.0	20.0	40.0
1,1-Dichloropropene	FB	Ave	7348 1040465	13224	157266	310724	662295	0.500 60.0	1.00	10.0	20.0	40.0
Carbon tetrachloride	FB	Ave	7160 928150	12799	138203	275660	590240	0.500 60.0	1.00	10.0	20.0	40.0
Isobutyl alcohol	FB	Ave	3024 400360	5010	65708	129156	263648	12.5 1500	25.0	250	500	1000
Benzene	FB	Ave	25623 3154247	42454	480702	935627	2019515	0.500 60.0	1.00	10.0	20.0	40.0

FORM VI
GC/MS VOA BY INTERNAL STANDARD - INITIAL CALIBRATION DATA
RESPONSE AND CONCENTRATION

Lab Name: TestAmerica Canton Job No.: 240-81698-1 Analy Batch No.: 272263

SDG No.:

Instrument ID: A3UX16 GC Column: DB-624 ID: 0.18(mm) Heated Purge: (Y/N) N

Calibration Start Date: 03/29/2017 14:02 Calibration End Date: 03/29/2017 15:56 Calibration ID: 39180

ANALYTE	IS REF	CURVE TYPE	RESPONSE					CONCENTRATION (UG/L)				
			LVL 1 LVL 6	LVL 2	LVL 3	LVL 4	LVL 5	LVL 1 LVL 6	LVL 2	LVL 3	LVL 4	LVL 5
1,2-Dichloroethane	FB	Ave	7301 1014431	14020	157922	307103	662756	0.500 60.0	1.00	10.0	20.0	40.0
n-Heptane	FB	Lin1	+++++ 341428	29623	68593	112761	215843	+++++ 60.0	1.00	10.0	20.0	40.0
Trichloroethene	FB	Ave	6355 796803	11148	123108	233955	502151	0.500 60.0	1.00	10.0	20.0	40.0
Methylcyclohexane	FB	Ave	7397 1037120	15758	151173	295935	651030	0.500 60.0	1.00	10.0	20.0	40.0
1,2-Dichloropropane	FB	Ave	4964 706657	10130	110357	215114	461237	0.500 60.0	1.00	10.0	20.0	40.0
Dibromomethane	FB	Ave	3437 407486	5893	64377	124908	261655	0.500 60.0	1.00	10.0	20.0	40.0
1,4-Dioxane	FB	Ave	834 123335	1605	19655	38426	78547	10.0 1200	20.0	200	400	800
Bromodichloromethane	FB	Ave	7155 985845	13436	148706	290638	639618	0.500 60.0	1.00	10.0	20.0	40.0
2-Chloroethyl vinyl ether	FB	Ave	5918 700370	9463	112468	213909	464280	1.00 120	2.00	20.0	40.0	80.0
cis-1,3-Dichloropropene	FB	Ave	8395 1200301	16151	180675	352263	774818	0.500 60.0	1.00	10.0	20.0	40.0
4-Methyl-2-pentanone (MIBK)	FB	Ave	8562 956773	15661	157774	311153	638574	1.00 120	2.00	20.0	40.0	80.0
Toluene	CBNZ d5	Ave	24459 3381801	43972	506034	999549	2175973	0.500 60.0	1.00	10.0	20.0	40.0
trans-1,3-Dichloropropene	CBNZ d5	Ave	7400 1018460	13881	154908	303427	666263	0.500 60.0	1.00	10.0	20.0	40.0
Ethyl methacrylate	CBNZ d5	Ave	6188 790543	10204	129971	253071	519797	0.500 60.0	1.00	10.0	20.0	40.0
1,1,2-Trichloroethane	CBNZ d5	Ave	4287 568086	8004	90248	170548	374844	0.500 60.0	1.00	10.0	20.0	40.0
1,3-Dichloropropane	CBNZ d5	Ave	8240 1000041	14327	159567	306909	664700	0.500 60.0	1.00	10.0	20.0	40.0
Tetrachloroethene	CBNZ d5	Ave	4136 582643	6962	84984	170857	371340	0.500 60.0	1.00	10.0	20.0	40.0
2-Hexanone	CBNZ d5	Ave	6760 648844	9432	113881	220698	461028	1.00 120	2.00	20.0	40.0	80.0
Dibromochloromethane	CBNZ d5	Ave	4770 667908	8556	99130	200923	434766	0.500 60.0	1.00	10.0	20.0	40.0
1,2-Dibromoethane	CBNZ d5	Ave	3610 563465	8273	88330	172552	370102	0.500 60.0	1.00	10.0	20.0	40.0
Chlorobenzene	CBNZ d5	Ave	17130 2045855	28228	321425	617603	1344142	0.500 60.0	1.00	10.0	20.0	40.0

FORM VI
GC/MS VOA BY INTERNAL STANDARD - INITIAL CALIBRATION DATA
RESPONSE AND CONCENTRATION

Lab Name: TestAmerica Canton Job No.: 240-81698-1 Analy Batch No.: 272263

SDG No.:

Instrument ID: A3UX16 GC Column: DB-624 ID: 0.18(mm) Heated Purge: (Y/N) N

Calibration Start Date: 03/29/2017 14:02 Calibration End Date: 03/29/2017 15:56 Calibration ID: 39180

ANALYTE	IS REF	CURVE TYPE	RESPONSE					CONCENTRATION (UG/L)				
			LVL 1 LVL 6	LVL 2	LVL 3	LVL 4	LVL 5	LVL 1 LVL 6	LVL 2	LVL 3	LVL 4	LVL 5
1,1,1,2-Tetrachloroethane	CBNZ d5	Ave	4983 751801	9911	113169	225209	484147	0.500 60.0	1.00	10.0	20.0	40.0
Ethylbenzene	CBNZ d5	Ave	7935 1160183	14503	176218	346211	759461	0.500 60.0	1.00	10.0	20.0	40.0
m-Xylene & p-Xylene	CBNZ d5	Ave	10431 1444911	19132	220713	426620	942436	0.500 60.0	1.00	10.0	20.0	40.0
o-Xylene	CBNZ d5	Ave	10356 1506460	18882	222497	440251	962956	0.500 60.0	1.00	10.0	20.0	40.0
Styrene	CBNZ d5	Ave	18059 2535054	30930	380327	746075	1657306	0.500 60.0	1.00	10.0	20.0	40.0
Bromoform	CBNZ d5	Ave	+++++ 415424	4801	61205	121879	267228	+++++ 60.0	1.00	10.0	20.0	40.0
Isopropylbenzene	CBNZ d5	Ave	25106 3711391	47797	560540	1075361	2384274	0.500 60.0	1.00	10.0	20.0	40.0
1,1,2,2-Tetrachloroethane	DCBd 4	Ave	5713 737968	10448	115737	225373	475002	0.500 60.0	1.00	10.0	20.0	40.0
Bromobenzene	DCBd 4	Ave	6775 903324	11739	135717	268325	589896	0.500 60.0	1.00	10.0	20.0	40.0
1,2,3-Trichloropropane	DCBd 4	Ave	1866 231422	2585	37411	71109	151875	0.500 60.0	1.00	10.0	20.0	40.0
trans-1,4-Dichloro-2-butene	DCBd 4	Ave	+++++ 214760	2705	32721	64414	136212	+++++ 60.0	1.00	10.0	20.0	40.0
N-Propylbenzene	DCBd 4	Ave	6497 959812	11342	143202	285089	622432	0.500 60.0	1.00	10.0	20.0	40.0
2-Chlorotoluene	DCBd 4	Ave	5533 849427	11118	129000	252467	551504	0.500 60.0	1.00	10.0	20.0	40.0
1,3,5-Trimethylbenzene	DCBd 4	Ave	19682 3072471	36925	453357	896247	1989434	0.500 60.0	1.00	10.0	20.0	40.0
4-Chlorotoluene	DCBd 4	Ave	6229 902216	11811	136344	267964	578143	0.500 60.0	1.00	10.0	20.0	40.0
tert-Butylbenzene	DCBd 4	Ave	16562 2492024	29749	361820	719500	1644461	0.500 60.0	1.00	10.0	20.0	40.0
1,2,4-Trimethylbenzene	DCBd 4	Ave	21832 3266809	39375	477256	940469	2101646	0.500 60.0	1.00	10.0	20.0	40.0
sec-Butylbenzene	DCBd 4	Ave	23620 3480080	40652	490263	1000351	2167632	0.500 60.0	1.00	10.0	20.0	40.0
1,3-Dichlorobenzene	DCBd 4	Ave	13777 1780923	22592	265561	521548	1144570	0.500 60.0	1.00	10.0	20.0	40.0
p-Isopropyltoluene	DCBd 4	Ave	19843 3054252	34232	440532	877803	1924581	0.500 60.0	1.00	10.0	20.0	40.0
1,4-Dichlorobenzene	DCBd 4	Ave	14045 1838844	25258	273613	543264	1195580	0.500 60.0	1.00	10.0	20.0	40.0

FORM VI
GC/MS VOA BY INTERNAL STANDARD - INITIAL CALIBRATION DATA
RESPONSE AND CONCENTRATION

Lab Name: TestAmerica Canton Job No.: 240-81698-1 Analy Batch No.: 272263

SDG No.:

Instrument ID: A3UX16 GC Column: DB-624 ID: 0.18(mm) Heated Purge: (Y/N) N

Calibration Start Date: 03/29/2017 14:02 Calibration End Date: 03/29/2017 15:56 Calibration ID: 39180

ANALYTE	IS REF	CURVE TYPE	RESPONSE					CONCENTRATION (UG/L)				
			LVL 1 LVL 6	LVL 2	LVL 3	LVL 4	LVL 5	LVL 1 LVL 6	LVL 2	LVL 3	LVL 4	LVL 5
n-Butylbenzene	DCBd 4	Ave	16284 2570482	29124	355628	730792	1598143	0.500 60.0	1.00	10.0	20.0	40.0
1,2-Dichlorobenzene	DCBd 4	Ave	11798 1705302	21566	254218	513920	1102993	0.500 60.0	1.00	10.0	20.0	40.0
1,2-Dibromo-3-Chloropropane	DCBd 4	Lin1	+++++ 136942	667	19605	41171	85385	+++++ 60.0	1.00	10.0	20.0	40.0
1,2,4-Trichlorobenzene	DCBd 4	Ave	6459 876963	10076	130479	265671	558939	0.500 60.0	1.00	10.0	20.0	40.0
Hexachlorobutadiene	DCBd 4	Ave	2702 338447	4820	52710	101162	207737	0.500 60.0	1.00	10.0	20.0	40.0
Naphthalene	DCBd 4	Ave	15052 2082436	26918	307761	640457	1329426	0.500 60.0	1.00	10.0	20.0	40.0
1,2,3-Trichlorobenzene	DCBd 4	Ave	5776 696197	9433	107067	207510	432770	0.500 60.0	1.00	10.0	20.0	40.0
Dibromofluoromethane (Surr)	FB	Ave	+++++ 692751	9065	107373	204745	449310	+++++ 60.0	1.00	10.0	20.0	40.0
1,2-Dichloroethane-d4 (Surr)	FB	Ave	+++++ 832640	11411	128256	252642	539067	+++++ 60.0	1.00	10.0	20.0	40.0
Toluene-d8 (Surr)	CBNZ d5	Ave	+++++ 2793316	36701	429977	828458	1828800	+++++ 60.0	1.00	10.0	20.0	40.0
4-Bromofluorobenzene (Surr)	CBNZ d5	Ave	+++++ 1072081	15864	166696	317105	703668	+++++ 60.0	1.00	10.0	20.0	40.0

Curve Type Legend:

Ave = Average ISTD
Lin1 = Linear 1/conc ISTD

FORM VI
GC/MS VOA BY INTERNAL STANDARD - INITIAL CALIBRATION DATA
CURVE EVALUATION

Lab Name: TestAmerica Canton Job No.: 240-81698-1 Analy Batch No.: 272263

SDG No.:

Instrument ID: A3UX16 GC Column: DB-624 ID: 0.18(mm) Heated Purge: (Y/N) N

Calibration Start Date: 03/29/2017 16:47 Calibration End Date: 03/29/2017 18:41 Calibration ID: 39171

Calibration Files:

LEVEL:	LAB SAMPLE ID:	LAB FILE ID:
Level 1	STDA9 240-272263/13	UXM1395.D
Level 2	STDA9 240-272263/14	UXM1396.D
Level 3	STDA9 240-272263/15	UXM1397.D
Level 4	STDA9 240-272263/16	UXM1398.D
Level 5	STDA9 240-272263/17	UXM1399.D
Level 6	STDA9 240-272263/18	UXM1400.D

ANALYTE	RRF					CURVE TYPE	COEFFICIENT			#	MIN RRF	%RSD	#	MAX %RSD	R^2 OR COD	#	MIN R^2 OR COD
	LVL 1 LVL 6	LVL 2	LVL 3	LVL 4	LVL 5		B	M1	M2								
Acetonitrile	0.0364 0.0272	0.0292	0.0281	0.0279	0.0273	Ave		0.0293				12.0		20.0			
Diisopropyl ether	0.2418 0.2884	0.2575	0.2673	0.2841	0.2839	Ave		0.2705				6.8		20.0			
2-Chloro-1,3-butadiene	0.4241 0.5251	0.4918	0.4931	0.5258	0.5135	Ave		0.4956				7.7		20.0			
Ethyl t-butyl ether	0.8941 0.9713	0.9046	0.9209	0.9620	0.9424	Ave		0.9325				3.3		20.0			
Propionitrile	0.0298 0.0298	0.0331	0.0301	0.0299	0.0302	Ave		0.0305				4.2		20.0			
Ethyl acetate	0.1909 0.1703	0.1752	0.1746	0.1791	0.1739	Ave		0.1773				4.1		20.0			
Methacrylonitrile	0.1327 0.1386	0.1382	0.1332	0.1371	0.1384	Ave		0.1364				2.0		20.0			
Tert-amyl methyl ether	0.8109 0.9359	0.8102	0.8582	0.8930	0.8990	Ave		0.8679				5.8		20.0			
n-Butanol	+++++ 0.0056	0.0040	0.0048	0.0053	0.0055	Ave		0.0050				13.3		20.0			
Ethyl acrylate	0.2249 0.2518	0.2575	0.2408	0.2598	0.2476	Ave		0.2470				5.2		20.0			
Methyl methacrylate	0.1717 0.1935	0.1952	0.1866	0.1924	0.1935	Ave		0.1888				4.7		20.0			
2-Nitropropane	0.0546 0.0638	0.0533	0.0534	0.0600	0.0619	Ave		0.0578				8.0		20.0			
n-Butyl acetate	0.3417 0.3317	0.3093	0.3517	0.3464	0.3372	Ave		0.3363				4.5		20.0			
1-Chlorohexane	0.4194 0.4316	0.4623	0.3987	0.4101	0.4141	Ave		0.4227				5.3		20.0			
Cyclohexanone	+++++ 0.0148	0.0137	0.0131	0.0139	0.0145	Ave		0.0140				4.8		20.0			

Note: The M1 coefficient is the same as Ave RRF for an Ave curve type.

FORM VI
GC/MS VOA BY INTERNAL STANDARD - INITIAL CALIBRATION DATA
CURVE EVALUATION

Lab Name: TestAmerica Canton Job No.: 240-81698-1 Analy Batch No.: 272263

SDG No.:

Instrument ID: A3UX16 GC Column: DB-624 ID: 0.18(mm) Heated Purge: (Y/N) N

Calibration Start Date: 03/29/2017 16:47 Calibration End Date: 03/29/2017 18:41 Calibration ID: 39171

ANALYTE	RRF					CURVE TYPE	COEFFICIENT			#	MIN RRF	%RSD	#	MAX %RSD	R^2 OR COD	#	MIN R^2 OR COD
	LVL 1 LVL 6	LVL 2	LVL 3	LVL 4	LVL 5		B	M1	M2								
Pentachloroethane	0.1893 0.2532	0.1972	0.2128	0.2350	0.2433	Lin1	-0.090	0.2457							0.9980		0.9900
1,2,3-Trimethylbenzene	2.3483 2.9147	2.3254	2.5627	2.7758	2.7767	Ave		2.6173				9.4		20.0			
Benzyl chloride	0.1883 0.3047	0.1975	0.2323	0.2690	0.2821	Lin1	-0.082	0.2894							0.9950		0.9900
1,3,5-Trichlorobenzene	0.6899 0.8706	0.6788	0.7454	0.8135	0.8067	Ave		0.7675				9.9		20.0			
2-Methylnaphthalene	0.3129 0.5782	0.3754	0.4117	0.4892	0.5380	Lin1	-0.355	0.5453							0.9930		0.9900

Note: The M1 coefficient is the same as Ave RRF for an Ave curve type.

FORM VI
GC/MS VOA BY INTERNAL STANDARD - INITIAL CALIBRATION DATA
RESPONSE AND CONCENTRATION

Lab Name: TestAmerica Canton Job No.: 240-81698-1 Analy Batch No.: 272263

SDG No.:

Instrument ID: A3UX16 GC Column: DB-624 ID: 0.18(mm) Heated Purge: (Y/N) N

Calibration Start Date: 03/29/2017 16:47 Calibration End Date: 03/29/2017 18:41 Calibration ID: 39171

Calibration Files:

LEVEL:	LAB SAMPLE ID:	LAB FILE ID:
Level 1	STDA9 240-272263/13	UXM1395.D
Level 2	STDA9 240-272263/14	UXM1396.D
Level 3	STDA9 240-272263/15	UXM1397.D
Level 4	STDA9 240-272263/16	UXM1398.D
Level 5	STDA9 240-272263/17	UXM1399.D
Level 6	STDA9 240-272263/18	UXM1400.D

ANALYTE	IS REF	CURVE TYPE	RESPONSE					CONCENTRATION (UG/L)				
			LVL 1 LVL 6	LVL 2	LVL 3	LVL 4	LVL 5	LVL 1 LVL 6	LVL 2	LVL 3	LVL 4	LVL 5
Acetonitrile	FB	Ave	6626 616786	10483	98845	200908	404822	5.00 600	10.0	100	200	400
Diisopropyl ether	FB	Ave	4401 654948	9244	93982	204572	420896	0.500 60.0	1.00	10.0	20.0	40.0
2-Chloro-1,3-butadiene	FB	Ave	7720 1192751	17656	173376	378581	761346	0.500 60.0	1.00	10.0	20.0	40.0
Ethyl t-butyl ether	FB	Ave	16275 2205969	32473	323811	692599	1397092	0.500 60.0	1.00	10.0	20.0	40.0
Propionitrile	FB	Ave	5430 676312	11871	105868	215525	447369	5.00 600	10.0	100	200	400
Ethyl acetate	FB	Ave	6948 773738	12578	122769	257931	515707	1.00 120	2.00	20.0	40.0	80.0
Methacrylonitrile	FB	Ave	24149 3147206	49625	468368	986832	2052179	5.00 600	10.0	100	200	400
Tert-amyl methyl ether	FB	Ave	14761 2125641	29084	301763	642905	1332793	0.500 60.0	1.00	10.0	20.0	40.0
n-Butanol	FB	Ave	+++++ 318420	3558	42107	95467	202844	+++++ 1500	25.0	250	500	1000
Ethyl acrylate	FB	Ave	4093 571908	9244	84671	187018	367012	0.500 60.0	1.00	10.0	20.0	40.0
Methyl methacrylate	FB	Ave	6251 878953	14011	131247	277118	573813	1.00 120	2.00	20.0	40.0	80.0
2-Nitropropane	FB	Ave	1988 289942	3826	37570	86406	183435	1.00 120	2.00	20.0	40.0	80.0
n-Butyl acetate	FB	Ave	6219 753321	11102	123671	249402	499918	0.500 60.0	1.00	10.0	20.0	40.0
1-Chlorohexane	CBNZ d5	Ave	6651 803253	13821	117831	250734	514953	0.500 60.0	1.00	10.0	20.0	40.0
Cyclohexanone	DCBd 4	Ave	+++++ 156911	2408	22547	48539	103323	+++++ 600	10.0	100	200	400
Pentachloroethane	CBNZ d5	Lin1	6006 942593	11793	125799	287390	605017	1.00 120	2.00	20.0	40.0	80.0

FORM VI
GC/MS VOA BY INTERNAL STANDARD - INITIAL CALIBRATION DATA
RESPONSE AND CONCENTRATION

Lab Name: TestAmerica Canton Job No.: 240-81698-1 Analy Batch No.: 272263

SDG No.:

Instrument ID: A3UX16 GC Column: DB-624 ID: 0.18(mm) Heated Purge: (Y/N) N

Calibration Start Date: 03/29/2017 16:47 Calibration End Date: 03/29/2017 18:41 Calibration ID: 39171

ANALYTE	IS REF	CURVE TYPE	RESPONSE					CONCENTRATION (UG/L)				
			LVL 1 LVL 6	LVL 2	LVL 3	LVL 4	LVL 5	LVL 1 LVL 6	LVL 2	LVL 3	LVL 4	LVL 5
1,2,3-Trimethylbenzene	DCBd 4	Ave	21146 3084356	40886	440474	970688	1982895	0.500 60.0	1.00	10.0	20.0	40.0
Benzyl chloride	DCBd 4	Lin1	1696 322434	3473	39933	94075	201482	0.500 60.0	1.00	10.0	20.0	40.0
1,3,5-Trichlorobenzene	DCBd 4	Ave	6212 921325	11935	128118	284477	576104	0.500 60.0	1.00	10.0	20.0	40.0
2-Methylnaphthalene	DCBd 4	Lin1	5635 1223729	13202	141522	342142	768353	1.00 120	2.00	20.0	40.0	80.0

Curve Type Legend:

Ave = Average ISTD
Lin1 = Linear 1/conc ISTD

FORM VI
GC/MS VOA BY INTERNAL STANDARD - INITIAL CALIBRATION DATA
CURVE EVALUATION

Lab Name: TestAmerica Canton Job No.: 240-81698-1 Analy Batch No.: 285694

SDG No.:

Instrument ID: A3UX8 GC Column: DB-624 ID: 0.18(mm) Heated Purge: (Y/N) Y

Calibration Start Date: 07/02/2017 05:21 Calibration End Date: 07/02/2017 07:53 Calibration ID: 40516

Calibration Files:

LEVEL:	LAB SAMPLE ID:	LAB FILE ID:
Level 1	STD8260 240-285694/10	UX80990.D
Level 2	STD8260 240-285694/9	UX80989.D
Level 3	STD8260 240-285694/8	UX80988.D
Level 4	STD8260 240-285694/7	UX80987.D
Level 5	ICIS 240-285694/6	UX80986.D
Level 6	STD8260 240-285694/5	UX80985.D
Level 7	STD8260 240-285694/4	UX80984.D
Level 8	STD8260 240-285694/3	UX80983.D

ANALYTE	RRF					CURVE TYPE	COEFFICIENT			#	MIN RRF	%RSD	#	MAX %RSD	R^2 OR COD	#	MIN R^2 OR COD
	LVL 1 LVL 6	LVL 2 LVL 7	LVL 3 LVL 8	LVL 4	LVL 5		B	M1	M2								
Dichlorodifluoromethane	0.1983 0.2106	0.1779 0.2112	0.2031 0.2051	0.2100	0.2131	Ave		0.2036			0.1000	5.7		20.0			
Chloromethane	0.3321 0.2995	0.2903 0.2838	0.2756 0.2729	0.3014	0.2912	Ave		0.2933			0.1000	6.4		20.0			
Vinyl chloride	0.2150 0.2104	0.1992 0.2043	0.2052 0.1986	0.2135	0.2102	Ave		0.2070			0.1000	3.0		20.0			
Butadiene	0.2474 0.2800	0.2545 0.2702	0.2427 0.2600	0.2831	0.2694	Ave		0.2634				5.6		20.0			
Bromomethane	+++++ 0.1118	0.1072 0.0969	0.1017 0.0837	0.1108	0.1109	Ave		0.1033			0.0500	9.9		20.0			
Chloroethane	0.1218 0.1377	0.1108 0.1334	0.1202 0.1223	0.1321	0.1300	Ave		0.1260			0.0500	7.0		20.0			
Dichlorofluoromethane	0.3062 0.3158	0.2773 0.2998	0.2951 0.2896	0.3065	0.3109	Ave		0.3002				4.2		20.0			
Trichlorofluoromethane	0.2389 0.2834	0.2519 0.2726	0.2523 0.2559	0.2771	0.2835	Ave		0.2644			0.1000	6.4		20.0			
Ethyl ether	+++++ 0.2478	0.2893 0.2446	0.2788 0.2231	0.2478	0.2444	Ave		0.2537				8.9		20.0			
Acrolein	0.0305 0.0291	0.0305 0.0281	0.0372 0.0264	0.0293	0.0279	Ave		0.0299				10.9		20.0			
1,1-Dichloroethene	0.1928 0.1937	0.1944 0.1823	0.1825 0.1774	0.1769	0.1825	Ave		0.1853			0.1000	3.9		20.0			
1,1,2-Trichloro-1,2,2-trifluoroethane	0.1567 0.1606	0.1366 0.1575	0.1588 0.1477	0.1515	0.1538	Ave		0.1529			0.0500	5.1		20.0			
Acetone	+++++ 0.1293	+++++ 0.1272	0.2656 0.1161	0.1685	0.1450	Lin1	1.3636	0.1149			0.0100				0.9980		0.9900
Iodomethane	0.3819 0.3697	0.3326 0.3485	0.3532 0.3367	0.3536	0.3476	Ave		0.3530				4.6		20.0			

Note: The M1 coefficient is the same as Ave RRF for an Ave curve type.

FORM VI
GC/MS VOA BY INTERNAL STANDARD - INITIAL CALIBRATION DATA
CURVE EVALUATION

Lab Name: TestAmerica Canton Job No.: 240-81698-1 Analy Batch No.: 285694

SDG No.:

Instrument ID: A3UX8 GC Column: DB-624 ID: 0.18(mm) Heated Purge: (Y/N) Y

Calibration Start Date: 07/02/2017 05:21 Calibration End Date: 07/02/2017 07:53 Calibration ID: 40516

ANALYTE	RRF					CURVE TYPE	COEFFICIENT			#	MIN RRF	%RSD	#	MAX %RSD	R^2 OR COD	#	MIN R^2 OR COD
	LVL 1 LVL 6	LVL 2 LVL 7	LVL 3 LVL 8	LVL 4	LVL 5		B	M1	M2								
Carbon disulfide	0.4535 0.5530	0.4164 0.5394	0.4353 0.5502	0.4714	0.4840	Ave		0.4879			0.1000	11.0		20.0			
3-Chloro-1-propene	0.0801 0.1239	0.0963 0.1195	0.1009 0.1137	0.0997	0.1083	Ave		0.1053				13.4		20.0			
Methyl acetate	0.3716 0.2920	0.3256 0.2904	0.3999 0.2789	0.3003	0.2940	Ave		0.3191			0.1000	13.8		20.0			
Methylene Chloride	1.2084 0.2421	0.7327 0.2304	0.3947 0.2148	0.3018	0.2593	Lin1	0.9935	0.2139			0.1000				0.9990		0.9900
tert-Butyl alcohol (TBA)	+++++ 0.0270	+++++ 0.0271	0.0464 0.0263	0.0318	0.0259	Lin1	0.7736	0.0258							0.9970		0.9900
Acrylonitrile	0.1381 0.1230	0.1339 0.1184	0.1616 0.1131	0.1219	0.1228	Ave		0.1291				11.9		20.0			
trans-1,2-Dichloroethene	0.2003 0.2279	0.2132 0.2172	0.2210 0.2031	0.2187	0.2168	Ave		0.2148			0.1000	4.2		20.0			
Methyl tert-butyl ether	0.7319 0.7166	0.6508 0.7130	0.7035 0.6797	0.6514	0.6765	Ave		0.6904			0.1000	4.4		20.0			
Hexane	+++++ 0.0641	+++++ 0.0619	0.0812 0.0614	0.0705	0.0616	Ave		0.0668				11.7		20.0			
1,1-Dichloroethane	0.4503 0.4440	0.4245 0.4246	0.4364 0.4065	0.4299	0.4111	Ave		0.4284			0.2000	3.5		20.0			
Vinyl acetate	0.6208 0.7803	0.6451 0.7852	0.7206 0.7616	0.6404	0.7036	Ave		0.7072				9.3		20.0			
2-Butanone (MEK)	+++++ 0.2004	+++++ 0.1993	0.3011 0.1857	0.2720	0.2362	Lin1	1.4379	0.1863			0.0100				0.9980		0.9900
cis-1,2-Dichloroethene	0.2916 0.2648	0.2463 0.2512	0.2570 0.2353	0.2603	0.2553	Ave		0.2577			0.1000	6.4		20.0			
2,2-Dichloropropane	0.1567 0.2304	0.1704 0.2245	0.1911 0.2158	0.1970	0.2084	Ave		0.1993				13.0		20.0			
Bromochloromethane	0.1472 0.1351	0.1292 0.1297	0.1341 0.1223	0.1298	0.1289	Ave		0.1320				5.5		20.0			
Tetrahydrofuran	+++++ 0.1243	+++++ 0.1227	0.2209 0.1176	0.1284	0.1279	Lin1	0.7552	0.1161							0.9970		0.9900
Chloroform	0.5013 0.4304	0.4245 0.4131	0.4177 0.3891	0.4203	0.4161	Ave		0.4266			0.2000	7.6		20.0			
1,1,1-Trichloroethane	0.2959 0.3586	0.2671 0.3486	0.3077 0.3329	0.3076	0.3252	Ave		0.3179			0.1000	9.3		20.0			
Cyclohexane	0.4165 0.4687	0.3965 0.4536	0.4424 0.4433	0.4386	0.4507	Ave		0.4388			0.1000	5.2		20.0			
1,1-Dichloropropene	0.2936 0.3054	0.2722 0.2983	0.3036 0.2878	0.2959	0.2920	Ave		0.2936				3.5		20.0			

Note: The M1 coefficient is the same as Ave RRF for an Ave curve type.

FORM VI
GC/MS VOA BY INTERNAL STANDARD - INITIAL CALIBRATION DATA
CURVE EVALUATION

Lab Name: TestAmerica Canton Job No.: 240-81698-1 Analy Batch No.: 285694

SDG No.:

Instrument ID: A3UX8 GC Column: DB-624 ID: 0.18(mm) Heated Purge: (Y/N) Y

Calibration Start Date: 07/02/2017 05:21 Calibration End Date: 07/02/2017 07:53 Calibration ID: 40516

ANALYTE	RRF					CURVE TYPE	COEFFICIENT			#	MIN RRF	%RSD	#	MAX %RSD	R^2 OR COD	#	MIN R^2 OR COD
	LVL 1 LVL 6	LVL 2 LVL 7	LVL 3 LVL 8	LVL 4	LVL 5		B	M1	M2								
Carbon tetrachloride	0.2571 0.3148	0.2253 0.3117	0.2594 0.3036	0.2674	0.2810	Ave		0.2775			0.1000	11.2		20.0			
Isobutyl alcohol	+++++ 0.0150	+++++ 0.0149	0.0238 0.0142	0.0202	0.0151	Lin1	1.2248	0.0141							0.9990		0.9900
1,2-Dichloroethane	0.4815 0.4496	0.4481 0.4336	0.4755 0.4078	0.4363	0.4314	Ave		0.4455			0.1000	5.4		20.0			
Benzene	0.9802 0.9019	0.8816 0.8589	0.8973 0.8134	0.8920	0.8427	Ave		0.8835			0.5000	5.6		20.0			
n-Heptane	+++++ 0.0710	+++++ 0.0717	0.0671 0.0681	0.0691	0.0709	Ave		0.0696				2.6		20.0			
Trichloroethene	0.2702 0.2540	0.2411 0.2428	0.2426 0.2339	0.2495	0.2417	Ave		0.2470			0.1500	4.5		20.0			
Methylcyclohexane	0.4186 0.3924	0.3497 0.3847	0.3938 0.3701	0.3631	0.3776	Ave		0.3812			0.1000	5.6		20.0			
1,2-Dichloropropane	0.2267 0.2524	0.2622 0.2431	0.2459 0.2291	0.2410	0.2395	Ave		0.2425			0.1000	4.8		20.0			
Dibromomethane	0.1413 0.1515	0.1537 0.1488	0.1544 0.1391	0.1429	0.1467	Ave		0.1473				3.9		20.0			
1,4-Dioxane	+++++ 0.0026	+++++ 0.0025	0.0034 0.0024	0.0029	0.0024	Ave		0.0027				14.1		20.0			
Bromodichloromethane	0.2343 0.3245	0.2294 0.3226	0.2556 0.3102	0.2609	0.2775	Ave		0.2769			0.1500	13.8		20.0			
2-Chloroethyl vinyl ether	0.1335 0.1399	0.1029 0.1432	0.1388 0.1325	0.1186	0.1239	Ave		0.1292				10.4		20.0			
cis-1,3-Dichloropropene	+++++ 0.3472	0.2143 0.3482	0.2657 0.3383	0.2726	0.2884	Lin1	-0.367	0.3428			0.1500				0.9980		0.9900
4-Methyl-2-pentanone (MIBK)	+++++ 0.3952	+++++ 0.3931	0.5136 0.3706	0.3654	0.3851	Ave		0.4038			0.0500	13.6		20.0			
Toluene	1.4058 1.3028	1.2341 1.2501	1.3163 1.2131	1.2338	1.2321	Ave		1.2735			0.4000	5.1		20.0			
trans-1,3-Dichloropropene	+++++ 0.4362	0.2403 0.4414	0.3087 0.4399	0.3222	0.3599	Lin1	-0.608	0.4409			0.1000				0.9980		0.9900
Ethyl methacrylate	0.2943 0.4285	0.2834 0.4287	0.3829 0.3999	0.3700	0.3868	Ave		0.3718				14.9		20.0			
1,1,2-Trichloroethane	0.3325 0.2877	0.2866 0.2737	0.3259 0.2577	0.2763	0.2773	Ave		0.2897			0.1000	9.0		20.0			
1,3-Dichloropropane	0.5034 0.5005	0.5218 0.4832	0.5315 0.4467	0.4578	0.4709	Ave		0.4895				6.1		20.0			
Tetrachloroethene	0.2484 0.2693	0.2450 0.2639	0.2680 0.2524	0.2613	0.2564	Ave		0.2581			0.1500	3.5		20.0			

Note: The M1 coefficient is the same as Ave RRF for an Ave curve type.

FORM VI
GC/MS VOA BY INTERNAL STANDARD - INITIAL CALIBRATION DATA
CURVE EVALUATION

Lab Name: TestAmerica Canton Job No.: 240-81698-1 Analy Batch No.: 285694

SDG No.:

Instrument ID: A3UX8 GC Column: DB-624 ID: 0.18(mm) Heated Purge: (Y/N) Y

Calibration Start Date: 07/02/2017 05:21 Calibration End Date: 07/02/2017 07:53 Calibration ID: 40516

ANALYTE	RRF					CURVE TYPE	COEFFICIENT			#	MIN RRF	%RSD	#	MAX %RSD	R^2 OR COD	#	MIN R^2 OR COD
	LVL 1 LVL 6	LVL 2 LVL 7	LVL 3 LVL 8	LVL 4	LVL 5		B	M1	M2								
2-Hexanone	+++++ 0.3848	+++++ 0.3734	0.5008 0.3511	0.3743	0.3759	Ave		0.3934			0.0500	13.7		20.0			
Dibromochloromethane	+++++ 0.3216	+++++ 0.3262	0.2421 0.3170	0.2434	0.2597	Ave		0.2850				14.3		20.0			
1,2-Dibromoethane	0.2884 0.3009	0.2600 0.2947	0.3148 0.2749	0.2796	0.2871	Ave		0.2875				5.8		20.0			
Chlorobenzene	1.0355 0.9088	0.8880 0.8663	0.9135 0.8231	0.8765	0.8813	Ave		0.8991			0.3000	6.9		20.0			
1,1,1,2-Tetrachloroethane	0.2775 0.3470	0.2254 0.3289	0.2931 0.3178	0.2936	0.3100	Ave		0.2992				12.4		20.0			
Ethylbenzene	0.4842 0.4614	0.4220 0.4367	0.4415 0.4182	0.4547	0.4418	Ave		0.4451				4.8		20.0			
m-Xylene & p-Xylene	0.5270 0.5655	0.5219 0.5488	0.5368 0.5145	0.5337	0.5401	Ave		0.5360				3.0		20.0			
o-Xylene	0.5408 0.5697	0.5197 0.5376	0.5432 0.4893	0.5238	0.5516	Ave		0.5345				4.5		20.0			
Styrene	0.9727 0.9888	0.8856 0.9566	0.8978 0.8759	0.8735	0.9189	Ave		0.9212			0.3000	5.0		20.0			
Bromoform	+++++ 0.1831	+++++ 0.2001	0.1345 0.1994	0.1283	0.1506	Lin1	-0.541	0.2007			0.1000				0.9980		0.9900
Isopropylbenzene	1.2413 1.4860	1.2453 1.4164	1.3535 1.3379	1.3856	1.3976	Ave		1.3580			0.1000	6.2		20.0			
1,1,2,2-Tetrachloroethane	0.5699 0.6426	0.5731 0.6272	0.7607 0.5980	0.6415	0.6377	Ave		0.6314			0.3000	9.5		20.0			
Bromobenzene	0.7875 0.7176	0.6532 0.6945	0.7298 0.6552	0.7083	0.7082	Ave		0.7068				6.1		20.0			
1,2,3-Trichloropropane	+++++ 0.2322	+++++ 0.2314	0.3360 0.2115	0.2413	0.2415	Lin1	0.5288	0.2150							0.9980		0.9900
trans-1,4-Dichloro-2-butene	0.2301 0.2631	0.2011 0.2830	0.2572 0.2742	0.2271	0.2504	Ave		0.2483				11.0		20.0			
N-Propylbenzene	0.5994 0.7519	0.5720 0.7544	0.7437 0.7122	0.7430	0.7262	Ave		0.7003				10.3		20.0			
2-Chlorotoluene	0.6114 0.6684	0.6344 0.6510	0.6309 0.6235	0.6657	0.6551	Ave		0.6425				3.2		20.0			
1,3,5-Trimethylbenzene	1.7704 2.2626	1.6476 2.2557	2.1067 2.1300	2.1235	2.2396	Ave		2.0670				11.2		20.0			
4-Chlorotoluene	0.7353 0.6829	0.6124 0.6788	0.6972 0.6473	0.7246	0.6796	Ave		0.6823				5.8		20.0			
tert-Butylbenzene	1.7352 2.1470	1.8153 2.1098	2.0371 2.0105	2.0129	2.1263	Ave		1.9993				7.5		20.0			

Note: The M1 coefficient is the same as Ave RRF for an Ave curve type.

FORM VI
GC/MS VOA BY INTERNAL STANDARD - INITIAL CALIBRATION DATA
CURVE EVALUATION

Lab Name: TestAmerica Canton Job No.: 240-81698-1 Analy Batch No.: 285694

SDG No.:

Instrument ID: A3UX8 GC Column: DB-624 ID: 0.18(mm) Heated Purge: (Y/N) Y

Calibration Start Date: 07/02/2017 05:21 Calibration End Date: 07/02/2017 07:53 Calibration ID: 40516

ANALYTE	RRF					CURVE TYPE	COEFFICIENT			#	MIN RRF	%RSD	#	MAX %RSD	R^2 OR COD	#	MIN R^2 OR COD
	LVL 1 LVL 6	LVL 2 LVL 7	LVL 3 LVL 8	LVL 4	LVL 5		B	M1	M2								
1,2,4-Trimethylbenzene	1.9409 2.3909	1.8059 2.3542	2.2534 2.2403	2.2923	2.3325	Ave		2.2013				9.6		20.0			
sec-Butylbenzene	2.3163 2.7889	2.2048 2.7847	2.6417 2.6629	2.6223	2.7694	Ave		2.5989				8.5		20.0			
1,3-Dichlorobenzene	1.3741 1.3702	1.2852 1.3482	1.3848 1.2487	1.3287	1.3783	Ave		1.3398			0.6000	3.7		20.0			
p-Isopropyltoluene	2.0050 2.5877	1.8564 2.5750	2.3747 2.4463	2.4126	2.5980	Ave		2.3570				11.8		20.0			
1,4-Dichlorobenzene	1.6403 1.4110	1.4763 1.3649	1.5365 1.2745	1.4135	1.3939	Ave		1.4389			0.5000	7.8		20.0			
n-Butylbenzene	1.6429 2.1399	1.5650 2.1246	1.8515 2.0445	1.9548	2.0545	Ave		1.9222				11.3		20.0			
1,2-Dichlorobenzene	1.4348 1.3189	1.3653 1.2913	1.4359 1.1956	1.3638	1.3579	Ave		1.3454			0.4000	5.8		20.0			
1,2-Dibromo-3-Chloropropane	+++++ 0.1120	+++++ 0.1278	0.1099 0.1306	0.1052	0.1021	Ave		0.1146			0.0500	10.4		20.0			
1,2,4-Trichlorobenzene	0.8512 0.8804	0.8325 0.8762	0.8764 0.8360	0.8785	0.8679	Ave		0.8624			0.2000	2.3		20.0			
Hexachlorobutadiene	0.5426 0.4729	0.4326 0.4602	0.5339 0.4309	0.4670	0.4839	Ave		0.4780				8.7		20.0			
Naphthalene	1.8442 2.2508	1.9749 2.2419	2.3173 2.1256	2.2572	2.1893	Ave		2.1502				7.5		20.0			
1,2,3-Trichlorobenzene	0.9510 0.8725	0.9428 0.8471	0.9926 0.8000	0.9038	0.8641	Ave		0.8967				7.0		20.0			
Dibromofluoromethane (Surr)	0.3094 0.2288	0.2403 0.2217	0.2381 0.2214	0.2455	0.2373	Ave		0.2428				11.6		20.0			
1,2-Dichloroethane-d4 (Surr)	+++++ 0.3185	0.4196 0.3102	0.3966 0.3190	0.3708	0.3546	Ave		0.3556				11.9		20.0			
Toluene-d8 (Surr)	1.5585 1.1689	1.2389 1.0983	1.2531 1.1031	1.2531	1.1548	Ave		1.2286				12.0		20.0			
4-Bromofluorobenzene (Surr)	+++++ 0.4558	0.5784 0.4380	0.5448 0.4353	0.5207	0.4859	Ave		0.4941				11.2		20.0			

Note: The M1 coefficient is the same as Ave RRF for an Ave curve type.

FORM VI
GC/MS VOA BY INTERNAL STANDARD - INITIAL CALIBRATION DATA
RESPONSE AND CONCENTRATION

Lab Name: TestAmerica Canton Job No.: 240-81698-1 Analy Batch No.: 285694

SDG No.:

Instrument ID: A3UX8 GC Column: DB-624 ID: 0.18(mm) Heated Purge: (Y/N) Y

Calibration Start Date: 07/02/2017 05:21 Calibration End Date: 07/02/2017 07:53 Calibration ID: 40516

Calibration Files:

LEVEL:	LAB SAMPLE ID:	LAB FILE ID:
Level 1	STD8260 240-285694/10	UX80990.D
Level 2	STD8260 240-285694/9	UX80989.D
Level 3	STD8260 240-285694/8	UX80988.D
Level 4	STD8260 240-285694/7	UX80987.D
Level 5	ICIS 240-285694/6	UX80986.D
Level 6	STD8260 240-285694/5	UX80985.D
Level 7	STD8260 240-285694/4	UX80984.D
Level 8	STD8260 240-285694/3	UX80983.D

ANALYTE	IS REF	CURVE TYPE	RESPONSE					CONCENTRATION (UG/L)				
			LVL 1 LVL 6	LVL 2 LVL 7	LVL 3 LVL 8	LVL 4	LVL 5	LVL 1 LVL 6	LVL 2 LVL 7	LVL 3 LVL 8	LVL 4	LVL 5
Dichlorodifluoromethane	FB	Ave	5219 289578	9554 590722	28540 1213905	57027	116087	1.00 50.0	2.00 100	5.00 200	10.0	20.0
Chloromethane	FB	Ave	8741 411806	15591 793999	38736 1615249	81844	158620	1.00 50.0	2.00 100	5.00 200	10.0	20.0
Vinyl chloride	FB	Ave	5659 289258	10698 571595	28836 1175395	57982	114500	1.00 50.0	2.00 100	5.00 200	10.0	20.0
Butadiene	FB	Ave	6510 385033	13670 755836	34107 1538987	76875	146775	1.00 50.0	2.00 100	5.00 200	10.0	20.0
Bromomethane	FB	Ave	+++++ 153662	5757 271019	14297 495417	30088	60431	+++++ 50.0	2.00 100	5.00 200	10.0	20.0
Chloroethane	FB	Ave	3205 189345	5954 373099	16892 723770	35870	70835	1.00 50.0	2.00 100	5.00 200	10.0	20.0
Dichlorofluoromethane	FB	Ave	8058 434233	14897 838793	41480 1714353	83226	169375	1.00 50.0	2.00 100	5.00 200	10.0	20.0
Trichlorofluoromethane	FB	Ave	6286 389608	13530 762612	35453 1515001	75242	154438	1.00 50.0	2.00 100	5.00 200	10.0	20.0
Ethyl ether	FB	Ave	+++++ 340773	15538 684288	39187 1320605	67295	133124	+++++ 50.0	2.00 100	5.00 200	10.0	20.0
Acrolein	FB	Ave	4012 199735	8201 393627	26156 782454	39848	76060	5.00 250	10.0 500	25.0 1000	50.0	100
1,1-Dichloroethene	FB	Ave	5074 266313	10443 509945	25649 1050015	48043	99419	1.00 50.0	2.00 100	5.00 200	10.0	20.0
1,1,2-Trichloro-1,2,2-trifluoroetha ne	FB	Ave	4124 220760	7337 440563	22325 874517	41140	83779	1.00 50.0	2.00 100	5.00 200	10.0	20.0
Acetone	FB	Lin1	+++++ 355479	+++++ 711807	74654 1374015	91511	157951	+++++ 100	+++++ 200	10.0 400	20.0	40.0
Iodomethane	FB	Ave	10050 508338	17866 974872	49635 1992979	96031	189381	1.00 50.0	2.00 100	5.00 200	10.0	20.0
Carbon disulfide	FB	Ave	11935 760354	22364 1508903	61174 3256864	128010	263658	1.00 50.0	2.00 100	5.00 200	10.0	20.0

FORM VI
GC/MS VOA BY INTERNAL STANDARD - INITIAL CALIBRATION DATA
RESPONSE AND CONCENTRATION

Lab Name: TestAmerica Canton Job No.: 240-81698-1 Analy Batch No.: 285694

SDG No.:

Instrument ID: A3UX8 GC Column: DB-624 ID: 0.18(mm) Heated Purge: (Y/N) Y

Calibration Start Date: 07/02/2017 05:21 Calibration End Date: 07/02/2017 07:53 Calibration ID: 40516

ANALYTE	IS REF	CURVE TYPE	RESPONSE					CONCENTRATION (UG/L)				
			LVL 1 LVL 6	LVL 2 LVL 7	LVL 3 LVL 8	LVL 4	LVL 5	LVL 1 LVL 6	LVL 2 LVL 7	LVL 3 LVL 8	LVL 4	LVL 5
3-Chloro-1-propene	FB	Ave	2109 170345	5172 334159	14179 673114	27060	59000	1.00 50.0	2.00 100	5.00 200	10.0	20.0
Methyl acetate	FB	Ave	19558 802912	34982 1624682	112414 3302610	163102	320329	2.00 100	4.00 200	10.0 400	20.0	40.0
Methylene Chloride	FB	Lin1	31801 332912	39355 644414	55479 1271683	81942	141249	1.00 50.0	2.00 100	5.00 200	10.0	20.0
tert-Butyl alcohol (TBA)	FB	Lin1	+++++ 371113	+++++ 758144	65159 1556799	86353	140887	+++++ 500	+++++ 1000	50.0 2000	100	200
Acrylonitrile	FB	Ave	36341 1690911	71902 3313453	227071 6694514	330947	669070	10.0 500	20.0 1000	50.0 2000	100	200
trans-1,2-Dichloroethene	FB	Ave	5272 313392	11451 607678	31055 1202589	59393	118111	1.00 50.0	2.00 100	5.00 200	10.0	20.0
Methyl tert-butyl ether	FB	Ave	19262 985267	34955 1994612	98872 4023497	176875	368547	1.00 50.0	2.00 100	5.00 200	10.0	20.0
Hexane	FB	Ave	+++++ 88094	+++++ 173268	11412 363440	19139	33583	+++++ 50.0	+++++ 100	5.00 200	10.0	20.0
1,1-Dichloroethane	FB	Ave	11850 610525	22802 1187699	61332 2406262	116732	223971	1.00 50.0	2.00 100	5.00 200	10.0	20.0
Vinyl acetate	FB	Ave	16336 1072880	34650 2196641	101275 4508553	173902	383330	1.00 50.0	2.00 100	5.00 200	10.0	20.0
2-Butanone (MEK)	FB	Lin1	+++++ 551183	+++++ 1115172	84629 2199052	147701	257410	+++++ 100	+++++ 200	10.0 400	20.0	40.0
cis-1,2-Dichloroethene	FB	Ave	7675 364132	13230 702798	36121 1393080	70671	139068	1.00 50.0	2.00 100	5.00 200	10.0	20.0
2,2-Dichloropropane	FB	Ave	4123 316755	9154 628106	26859 1277714	53483	113547	1.00 50.0	2.00 100	5.00 200	10.0	20.0
Bromochloromethane	FB	Ave	3873 185787	6942 362797	18846 723993	35259	70208	1.00 50.0	2.00 100	5.00 200	10.0	20.0
Tetrahydrofuran	FB	Lin1	+++++ 341927	+++++ 686292	62083 1392282	69719	139343	+++++ 100	+++++ 200	10.0 400	20.0	40.0
Chloroform	FB	Ave	13193 591744	22802 1155758	58704 2303692	114119	226684	1.00 50.0	2.00 100	5.00 200	10.0	20.0
1,1,1-Trichloroethane	FB	Ave	7786 493034	14346 975113	43248 1970521	83522	177188	1.00 50.0	2.00 100	5.00 200	10.0	20.0
Cyclohexane	FB	Ave	10961 644449	21297 1269056	62173 2624134	119097	245558	1.00 50.0	2.00 100	5.00 200	10.0	20.0
1,1-Dichloropropene	FB	Ave	7726 419868	14622 834348	42665 1703527	80348	159097	1.00 50.0	2.00 100	5.00 200	10.0	20.0
Carbon tetrachloride	FB	Ave	6767 432804	12104 871858	36455 1797122	72603	153109	1.00 50.0	2.00 100	5.00 200	10.0	20.0
Isobutyl alcohol	FB	Lin1	+++++ 517220	+++++ 1045218	83694 2106654	137220	205993	+++++ 1250	+++++ 2500	125 5000	250	500

FORM VI
GC/MS VOA BY INTERNAL STANDARD - INITIAL CALIBRATION DATA
RESPONSE AND CONCENTRATION

Lab Name: TestAmerica Canton Job No.: 240-81698-1 Analy Batch No.: 285694

SDG No.:

Instrument ID: A3UX8 GC Column: DB-624 ID: 0.18(mm) Heated Purge: (Y/N) Y

Calibration Start Date: 07/02/2017 05:21 Calibration End Date: 07/02/2017 07:53 Calibration ID: 40516

ANALYTE	IS REF	CURVE TYPE	RESPONSE					CONCENTRATION (UG/L)				
			LVL 1 LVL 6	LVL 2 LVL 7	LVL 3 LVL 8	LVL 4	LVL 5	LVL 1 LVL 6	LVL 2 LVL 7	LVL 3 LVL 8	LVL 4	LVL 5
1,2-Dichloroethane	FB	Ave	12671 618155	24067 1212959	66832 2413873	118486	235039	1.00 50.0	2.00 100	5.00 200	10.0	20.0
Benzene	FB	Ave	25796 1240051	47356 2402659	126107 4815111	242208	459103	1.00 50.0	2.00 100	5.00 200	10.0	20.0
n-Heptane	FB	Ave	+++++ 97612	+++++ 200519	9426 403227	18770	38611	+++++ 50.0	+++++ 100	5.00 200	10.0	20.0
Trichloroethene	FB	Ave	7110 349213	12950 679347	34090 1384780	67757	131698	1.00 50.0	2.00 100	5.00 200	10.0	20.0
Methylcyclohexane	FB	Ave	11016 539474	18784 1076069	55342 2191148	98591	205694	1.00 50.0	2.00 100	5.00 200	10.0	20.0
1,2-Dichloropropane	FB	Ave	5967 347044	14085 680186	34565 1356510	65453	130454	1.00 50.0	2.00 100	5.00 200	10.0	20.0
Dibromomethane	FB	Ave	3718 208302	8255 416397	21698 823543	38816	79896	1.00 50.0	2.00 100	5.00 200	10.0	20.0
1,4-Dioxane	FB	Ave	+++++ 72221	+++++ 140186	9474 282694	15935	26305	+++++ 1000	+++++ 2000	100 4000	200	400
Bromodichloromethane	FB	Ave	6165 446129	12321 902450	35922 1836058	70833	151207	1.00 50.0	2.00 100	5.00 200	10.0	20.0
2-Chloroethyl vinyl ether	FB	Ave	7028 384777	11049 801111	39002 1568876	64422	135016	2.00 100	4.00 200	10.0 400	20.0	40.0
cis-1,3-Dichloropropene	FB	Lin1	+++++ 477353	11509 974016	37342 2002724	74025	157093	+++++ 50.0	2.00 100	5.00 200	10.0	20.0
4-Methyl-2-pentanone (MIBK)	FB	Ave	+++++ 1086776	+++++ 2199630	144354 4388215	198449	419637	+++++ 100	+++++ 200	10.0 400	20.0	40.0
Toluene	CBNZ d5	Ave	26926 1301349	48583 2566158	133214 5151619	242100	486767	1.00 50.0	2.00 100	5.00 200	10.0	20.0
trans-1,3-Dichloropropene	CBNZ d5	Lin1	+++++ 435687	9458 906187	31238 1868131	63232	142171	+++++ 50.0	2.00 100	5.00 200	10.0	20.0
Ethyl methacrylate	CBNZ d5	Ave	5637 428046	11155 879957	38747 1698170	72605	152822	1.00 50.0	2.00 100	5.00 200	10.0	20.0
1,1,2-Trichloroethane	CBNZ d5	Ave	6369 287385	11281 561937	32978 1094391	54209	109568	1.00 50.0	2.00 100	5.00 200	10.0	20.0
1,3-Dichloropropane	CBNZ d5	Ave	9641 499974	20540 991848	53786 1896776	89843	186054	1.00 50.0	2.00 100	5.00 200	10.0	20.0
Tetrachloroethene	CBNZ d5	Ave	4758 268979	9645 541835	27119 1071663	51268	101279	1.00 50.0	2.00 100	5.00 200	10.0	20.0
2-Hexanone	CBNZ d5	Ave	+++++ 768675	+++++ 1533141	101357 2982315	146893	297025	+++++ 100	+++++ 200	10.0 400	20.0	40.0
Dibromochloromethane	CBNZ d5	Ave	+++++ 321274	+++++ 669663	24505 1346179	47760	102611	+++++ 50.0	+++++ 100	5.00 200	10.0	20.0
1,2-Dibromoethane	CBNZ d5	Ave	5523 300593	10235 604905	31857 1167199	54875	113406	1.00 50.0	2.00 100	5.00 200	10.0	20.0

FORM VI
GC/MS VOA BY INTERNAL STANDARD - INITIAL CALIBRATION DATA
RESPONSE AND CONCENTRATION

Lab Name: TestAmerica Canton Job No.: 240-81698-1 Analy Batch No.: 285694

SDG No.:

Instrument ID: A3UX8 GC Column: DB-624 ID: 0.18(mm) Heated Purge: (Y/N) Y

Calibration Start Date: 07/02/2017 05:21 Calibration End Date: 07/02/2017 07:53 Calibration ID: 40516

ANALYTE	IS REF	CURVE TYPE	RESPONSE					CONCENTRATION (UG/L)				
			LVL 1 LVL 6	LVL 2 LVL 7	LVL 3 LVL 8	LVL 4	LVL 5	LVL 1 LVL 6	LVL 2 LVL 7	LVL 3 LVL 8	LVL 4	LVL 5
Chlorobenzene	CBNZ d5	Ave	19832 907792	34960 1778339	92448 3495294	171985	348180	1.00 50.0	2.00 100	5.00 200	10.0	20.0
1,1,1,2-Tetrachloroethane	CBNZ d5	Ave	5315 346643	8872 675230	29665 1349660	57613	122462	1.00 50.0	2.00 100	5.00 200	10.0	20.0
Ethylbenzene	CBNZ d5	Ave	9274 460928	16613 896422	44676 1775874	89218	174549	1.00 50.0	2.00 100	5.00 200	10.0	20.0
m-Xylene & p-Xylene	CBNZ d5	Ave	10094 564842	20547 1126580	54321 2184871	104737	213366	1.00 50.0	2.00 100	5.00 200	10.0	20.0
o-Xylene	CBNZ d5	Ave	10357 569070	20461 1103587	54975 2077926	102784	217910	1.00 50.0	2.00 100	5.00 200	10.0	20.0
Styrene	CBNZ d5	Ave	18630 987714	34862 1963817	90859 3719412	171410	363027	1.00 50.0	2.00 100	5.00 200	10.0	20.0
Bromoform	CBNZ d5	Lin1	+++++ 182882	+++++ 410714	13608 846903	25169	59483	+++++ 50.0	+++++ 100	5.00 200	10.0	20.0
Isopropylbenzene	CBNZ d5	Ave	23774 1484289	49026 2907695	136978 5681343	271902	552156	1.00 50.0	2.00 100	5.00 200	10.0	20.0
1,1,2,2-Tetrachloroethane	DCBd 4	Ave	6038 362546	12556 704545	42432 1357509	68938	138028	1.00 50.0	2.00 100	5.00 200	10.0	20.0
Bromobenzene	DCBd 4	Ave	8343 404803	14310 780131	40712 1487170	76113	153285	1.00 50.0	2.00 100	5.00 200	10.0	20.0
1,2,3-Trichloropropane	DCBd 4	Lin1	+++++ 131001	+++++ 259874	18745 479996	25926	52259	+++++ 50.0	+++++ 100	5.00 200	10.0	20.0
trans-1,4-Dichloro-2-butene	DCBd 4	Ave	2438 148410	4406 317869	14347 622351	24401	54190	1.00 50.0	2.00 100	5.00 200	10.0	20.0
N-Propylbenzene	DCBd 4	Ave	6350 424177	12532 847434	41483 1616630	79845	157171	1.00 50.0	2.00 100	5.00 200	10.0	20.0
2-Chlorotoluene	DCBd 4	Ave	6477 377085	13898 731203	35195 1415390	71538	141781	1.00 50.0	2.00 100	5.00 200	10.0	20.0
1,3,5-Trimethylbenzene	DCBd 4	Ave	18756 1276456	36096 2533788	117514 4834920	228203	484713	1.00 50.0	2.00 100	5.00 200	10.0	20.0
4-Chlorotoluene	DCBd 4	Ave	7790 385259	13417 762452	38890 1469356	77871	147084	1.00 50.0	2.00 100	5.00 200	10.0	20.0
tert-Butylbenzene	DCBd 4	Ave	18383 1211232	39771 2369911	113631 4563807	216309	460208	1.00 50.0	2.00 100	5.00 200	10.0	20.0
1,2,4-Trimethylbenzene	DCBd 4	Ave	20562 1348834	39565 2644476	125700 5085374	246342	504819	1.00 50.0	2.00 100	5.00 200	10.0	20.0
sec-Butylbenzene	DCBd 4	Ave	24539 1573323	48305 3128012	147356 6044723	281800	599374	1.00 50.0	2.00 100	5.00 200	10.0	20.0
1,3-Dichlorobenzene	DCBd 4	Ave	14557 772999	28156 1514376	77245 2834582	142789	298301	1.00 50.0	2.00 100	5.00 200	10.0	20.0
p-Isopropyltoluene	DCBd 4	Ave	21241 1459832	40672 2892473	132466 5553068	259261	562286	1.00 50.0	2.00 100	5.00 200	10.0	20.0

FORM VI
GC/MS VOA BY INTERNAL STANDARD - INITIAL CALIBRATION DATA
RESPONSE AND CONCENTRATION

Lab Name: TestAmerica Canton Job No.: 240-81698-1 Analy Batch No.: 285694

SDG No.:

Instrument ID: A3UX8 GC Column: DB-624 ID: 0.18(mm) Heated Purge: (Y/N) Y

Calibration Start Date: 07/02/2017 05:21 Calibration End Date: 07/02/2017 07:53 Calibration ID: 40516

ANALYTE	IS REF	CURVE TYPE	RESPONSE					CONCENTRATION (UG/L)				
			LVL 1 LVL 6	LVL 2 LVL 7	LVL 3 LVL 8	LVL 4	LVL 5	LVL 1 LVL 6	LVL 2 LVL 7	LVL 3 LVL 8	LVL 4	LVL 5
1,4-Dichlorobenzene	DCBd 4	Ave	17378 795996	32343 1533217	85709 2893108	151898	301680	1.00 50.0	2.00 100	5.00 200	10.0	20.0
n-Butylbenzene	DCBd 4	Ave	17405 1207233	34286 2386503	103280 4640941	210071	444667	1.00 50.0	2.00 100	5.00 200	10.0	20.0
1,2-Dichlorobenzene	DCBd 4	Ave	15200 744059	29911 1450499	80097 2713994	146553	293892	1.00 50.0	2.00 100	5.00 200	10.0	20.0
1,2-Dibromo-3-Chloropropane	DCBd 4	Ave	+++++ 63212	+++++ 143568	6132 296441	11303	22094	+++++ 50.0	+++++ 100	5.00 200	10.0	20.0
1,2,4-Trichlorobenzene	DCBd 4	Ave	9018 496668	18238 984209	48886 1897700	94409	187838	1.00 50.0	2.00 100	5.00 200	10.0	20.0
Hexachlorobutadiene	DCBd 4	Ave	5748 266791	9478 516949	29781 978218	50190	104734	1.00 50.0	2.00 100	5.00 200	10.0	20.0
Naphthalene	DCBd 4	Ave	19538 1269775	43267 2518305	129264 4825044	242569	473831	1.00 50.0	2.00 100	5.00 200	10.0	20.0
1,2,3-Trichlorobenzene	DCBd 4	Ave	10075 492232	20655 951586	55367 1816053	97121	187025	1.00 50.0	2.00 100	5.00 200	10.0	20.0
Dibromofluoromethane (Surr)	FB	Ave	8142 314558	12906 620218	33464 1310530	66654	129291	1.00 50.0	2.00 100	5.00 200	10.0	20.0
1,2-Dichloroethane-d4 (Surr)	FB	Ave	+++++ 437917	22538 867906	55734 1888316	100696	193187	+++++ 50.0	2.00 100	5.00 200	10.0	20.0
Toluene-d8 (Surr)	CBNZ d5	Ave	29850 1167585	48773 2254632	126822 4684425	245898	456218	1.00 50.0	2.00 100	5.00 200	10.0	20.0
4-Bromofluorobenzene (Surr)	CBNZ d5	Ave	+++++ 455284	22772 899145	55133 1848696	102171	191975	+++++ 50.0	2.00 100	5.00 200	10.0	20.0

Curve Type Legend:

Ave = Average ISTD
Lin1 = Linear 1/conc ISTD

FORM VI
GC/MS VOA BY INTERNAL STANDARD - INITIAL CALIBRATION DATA
CURVE EVALUATION

Lab Name: TestAmerica Canton Job No.: 240-81698-1 Analy Batch No.: 285694

SDG No.:

Instrument ID: A3UX8 GC Column: DB-624 ID: 0.18(mm) Heated Purge: (Y/N) Y

Calibration Start Date: 07/02/2017 08:14 Calibration End Date: 07/02/2017 10:48 Calibration ID: 40518

Calibration Files:

LEVEL:	LAB SAMPLE ID:	LAB FILE ID:
Level 1	STDA9 240-285694/18	UX80998.D
Level 2	STDA9 240-285694/17	UX80997.D
Level 3	STDA9 240-285694/16	UX80996.D
Level 4	STDA9 240-285694/15	UX80995.D
Level 5	STDA9 240-285694/14	UX80994.D
Level 6	STDA9 240-285694/13	UX80993.D
Level 7	STDA9 240-285694/12	UX80992.D
Level 8	STDA9 240-285694/11	UX80991.D

ANALYTE	RRF					CURVE TYPE	COEFFICIENT			#	MIN RRF	%RSD	#	MAX %RSD	R^2 OR COD	#	MIN R^2 OR COD
	LVL 1 LVL 6	LVL 2 LVL 7	LVL 3 LVL 8	LVL 4	LVL 5		B	M1	M2								
Acetonitrile	+++++ 0.0450	+++++ 0.0560	0.0454 0.0668	0.0440	0.0433	Qua	-0.392	0.0433	0.0000119						1.0000		0.9900
Diisopropyl ether	0.1879 0.2230	0.1825 0.2169	0.2212 0.2152	0.2140	0.2077	Ave		0.2086				7.3		20.0			
2-Chloro-1,3-butadiene	0.4371 0.4958	0.3493 0.4856	0.4371 0.4822	0.4527	0.4443	Ave		0.4480				10.3		20.0			
Ethyl t-butyl ether	0.8319 0.9096	0.6982 0.9060	0.8401 0.8883	0.8216	0.8184	Ave		0.8392				8.1		20.0			
Ethyl acetate	1.1747 0.4207	0.7207 0.5039	0.6054 0.6092	0.4906	0.4214	Qua	1.5447	0.3694	0.0005914						1.0000		0.9900
Propionitrile	0.0541 0.0498	0.0431 0.0600	0.0535 0.0716	0.0489	0.0480	Qua	-0.058	0.0464	0.0000127						1.0000		0.9900
Methacrylonitrile	0.2834 0.2715	0.2304 0.3203	0.2895 0.3185	0.2658	0.2583	Ave		0.2797				10.8		20.0			
Tert-amyl methyl ether	0.5796 0.6562	0.5131 0.6938	0.6237 0.7021	0.6023	0.5952	Ave		0.6207				10.1		20.0			
n-Butanol	+++++ 0.0090	+++++ 0.0136	0.0072 0.0195	0.0083	0.0075	Qua	-0.293	0.0072	0.0000025						1.0000		0.9900
Ethyl acrylate	+++++ 0.4350	0.2793 0.5009	0.3693 0.6081	0.3868	0.3639	Qua	-0.376	0.3924	0.0010895						1.0000		0.9900
Methyl methacrylate	+++++ 0.3915	+++++ 0.4518	0.3732 0.5195	0.3550	0.3400	Qua	-1.073	0.3796	0.0003578						1.0000		0.9900
2-Nitropropane	0.0862 0.0875	0.0550 0.1211	0.0686 +++++	0.0629	0.0654	Qua	0.0565	0.0522	0.0003431						1.0000		0.9900
n-Butyl acetate	+++++ 0.6436	+++++ 0.7412	0.6470 0.8705	0.5853	0.5744	Qua	-0.488	0.6030	0.0013531						1.0000		0.9900
1-Chlorohexane	0.3939 0.3485	0.2714 0.3393	0.3313 0.3557	0.3250	0.3248	Ave		0.3362				10.3		20.0			

Note: The M1 coefficient is the same as Ave RRF for an Ave curve type.

FORM VI
GC/MS VOA BY INTERNAL STANDARD - INITIAL CALIBRATION DATA
CURVE EVALUATION

Lab Name: TestAmerica Canton Job No.: 240-81698-1 Analy Batch No.: 285694

SDG No.:

Instrument ID: A3UX8 GC Column: DB-624 ID: 0.18(mm) Heated Purge: (Y/N) Y

Calibration Start Date: 07/02/2017 08:14 Calibration End Date: 07/02/2017 10:48 Calibration ID: 40518

ANALYTE	RRF					CURVE TYPE	COEFFICIENT			#	MIN RRF	%RSD	#	MAX %RSD	R^2 OR COD	#	MIN R^2 OR COD
	LVL 1 LVL 6	LVL 2 LVL 7	LVL 3 LVL 8	LVL 4	LVL 5		B	M1	M2								
Cyclohexanone	0.0103 0.0134	0.0094 0.0197	0.0132 0.0241	0.0126	0.0121	Qua	-0.251	0.0137	0.0000053						0.9990		0.9900
Pentachloroethane	+++++ 0.2725	0.1499 0.3186	0.2212 +++++	0.2234	0.1711	Qua	-0.473	0.2121	0.0005489						0.9980		0.9900
1,2,3-Trimethylbenzene	2.0426 2.4530	1.6937 2.3690	2.3051 2.3251	2.2837	2.2294	Ave		2.2127				10.9		20.0			
Benzyl chloride	+++++ 0.1366	0.0435 0.2008	0.0667 +++++	0.0695	0.0801	Qua	-0.123	0.0707	0.0013161						1.0000		0.9900
1,3,5-Trichlorobenzene	0.8707 0.9127	0.7261 0.8844	0.8775 0.8591	0.8875	0.8669	Ave		0.8606				6.6		20.0			
2-Methylnaphthalene	+++++ 1.5078	0.7770 1.7390	1.0754 +++++	1.1830	1.3559	Qua	-2.616	1.3180	0.0021699						1.0000		0.9900

Note: The M1 coefficient is the same as Ave RRF for an Ave curve type.

FORM VI
GC/MS VOA BY INTERNAL STANDARD - INITIAL CALIBRATION DATA
RESPONSE AND CONCENTRATION

Lab Name: TestAmerica Canton Job No.: 240-81698-1 Analy Batch No.: 285694

SDG No.:

Instrument ID: A3UX8 GC Column: DB-624 ID: 0.18(mm) Heated Purge: (Y/N) Y

Calibration Start Date: 07/02/2017 08:14 Calibration End Date: 07/02/2017 10:48 Calibration ID: 40518

Calibration Files:

LEVEL:	LAB SAMPLE ID:	LAB FILE ID:
Level 1	STDA9 240-285694/18	UX80998.D
Level 2	STDA9 240-285694/17	UX80997.D
Level 3	STDA9 240-285694/16	UX80996.D
Level 4	STDA9 240-285694/15	UX80995.D
Level 5	STDA9 240-285694/14	UX80994.D
Level 6	STDA9 240-285694/13	UX80993.D
Level 7	STDA9 240-285694/12	UX80992.D
Level 8	STDA9 240-285694/11	UX80991.D

ANALYTE	IS REF	CURVE TYPE	RESPONSE					CONCENTRATION (UG/L)				
			LVL 1 LVL 6	LVL 2 LVL 7	LVL 3 LVL 8	LVL 4	LVL 5	LVL 1 LVL 6	LVL 2 LVL 7	LVL 3 LVL 8	LVL 4	LVL 5
Acetonitrile	FB	Qua	+++++ 599683	+++++ 1473573	62485 3643877	121506	234485	+++++ 500	+++++ 1000	50.0 2000	100	200
Diisopropyl ether	FB	Ave	4989 297486	9762 570210	30470 1174672	59102	112461	1.00 50.0	2.00 100	5.00 200	10.0	20.0
2-Chloro-1,3-butadiene	FB	Ave	11605 661246	18690 1276954	60195 2631748	124998	240635	1.00 50.0	2.00 100	5.00 200	10.0	20.0
Ethyl t-butyl ether	FB	Ave	22086 1213089	37356 2382246	115699 4847800	226851	443203	1.00 50.0	2.00 100	5.00 200	10.0	20.0
Ethyl acetate	FB	Qua	62378 1122292	77125 2650083	166755 6649057	270903	456473	2.00 100	4.00 200	10.0 400	20.0	40.0
Propionitrile	FB	Qua	14367 663536	23057 1578613	73625 3908200	134943	259941	10.0 500	20.0 1000	50.0 2000	100	200
Methacrylonitrile	FB	Ave	75246 3620561	123269 8422803	398751 17384973	734016	1399026	10.0 500	20.0 1000	50.0 2000	100	200
Tert-amyl methyl ether	FB	Ave	15388 875218	27451 1824268	85898 3831614	166318	322312	1.00 50.0	2.00 100	5.00 200	10.0	20.0
n-Butanol	FB	Qua	+++++ 299727	+++++ 896195	24888 2660502	56983	102145	+++++ 1250	+++++ 2500	125 5000	250	500
Ethyl acrylate	FB	Qua	+++++ 580110	14944 1316991	50862 3319011	106815	197076	+++++ 50.0	2.00 100	5.00 200	10.0	20.0
Methyl methacrylate	FB	Qua	+++++ 1044327	+++++ 2375987	102807 5670805	196018	368244	+++++ 100	+++++ 200	10.0 400	20.0	40.0
2-Nitropropane	FB	Qua	4579 233282	5885 636976	18907 +++++	34713	70874	2.00 100	4.00 200	10.0 +++++	20.0	40.0
n-Butyl acetate	FB	Qua	+++++ 858391	+++++ 1948921	89103 4751007	161607	311075	+++++ 50.0	+++++ 100	5.00 200	10.0	20.0
1-Chlorohexane	CBNZ d5	Ave	7662 351566	10501 671048	34089 1480379	66311	127913	1.00 50.0	2.00 100	5.00 200	10.0	20.0
Cyclohexanone	CBNZ d5	Qua	2008 135441	3636 389660	13537 1004542	25662	47694	10.0 500	20.0 1000	50.0 2000	100	200

FORM VI
GC/MS VOA BY INTERNAL STANDARD - INITIAL CALIBRATION DATA
RESPONSE AND CONCENTRATION

Lab Name: TestAmerica Canton Job No.: 240-81698-1 Analy Batch No.: 285694

SDG No.:

Instrument ID: A3UX8 GC Column: DB-624 ID: 0.18(mm) Heated Purge: (Y/N) Y

Calibration Start Date: 07/02/2017 08:14 Calibration End Date: 07/02/2017 10:48 Calibration ID: 40518

ANALYTE	IS REF	CURVE TYPE	RESPONSE					CONCENTRATION (UG/L)				
			LVL 1 LVL 6	LVL 2 LVL 7	LVL 3 LVL 8	LVL 4	LVL 5	LVL 1 LVL 6	LVL 2 LVL 7	LVL 3 LVL 8	LVL 4	LVL 5
Pentachloroethane	DCBd 4	Qua	+++++ 293210	6274 695551	24003 +++++	48102	71471	+++++ 100	4.00 200	10.0 +++++	20.0	40.0
1,2,3-Trimethylbenzene	DCBd 4	Ave	21563 1319634	35439 2585549	125092 5202961	245894	465572	1.00 50.0	2.00 100	5.00 200	10.0	20.0
Benzyl chloride	DCBd 4	Qua	+++++ 73489	911 219210	3621 +++++	7484	16722	+++++ 50.0	2.00 100	5.00 +++++	10.0	20.0
1,3,5-Trichlorobenzene	DCBd 4	Ave	9192 491017	15192 965250	47619 1922382	95566	181034	1.00 50.0	2.00 100	5.00 200	10.0	20.0
2-Methylnaphthalene	DCBd 4	Qua	+++++ 1622273	32516 3795926	116722 +++++	254749	566307	+++++ 100	4.00 200	10.0 +++++	20.0	40.0

Curve Type Legend:

Ave = Average ISTD
Qua = Quadratic ISTD

FORM VII
GC/MS VOA CONTINUING CALIBRATION DATA

Lab Name: TestAmerica Canton Job No.: 240-81698-1

SDG No.:

Lab Sample ID: ICV 240-272263/20 Calibration Date: 03/29/2017 19:27

Instrument ID: A3UX16 Calib Start Date: 03/29/2017 14:02

GC Column: DB-624 ID: 0.18(mm) Calib End Date: 03/29/2017 15:56

Lab File ID: UXM1402.D Conc. Units: ng/uL Heated Purge: (Y/N) N

ANALYTE	CURVE TYPE	AVE RRF	RRF	MIN RRF	CALC AMOUNT	SPIKE AMOUNT	%D	MAX %D
Dichlorodifluoromethane	Ave	0.3166	0.2754	0.1000	0.0174	0.0200	-13.0	20.0
Chloromethane	Ave	0.3878	0.3485	0.1000	0.0180	0.0200	-10.1	20.0
Vinyl chloride	Ave	0.3718	0.3559	0.1000	0.0191	0.0200	-4.3	20.0
Butadiene	Ave	0.2937	0.2643		0.0180	0.0200	-10.0	30.0
Bromomethane	Ave	0.2332	0.2350	0.0500	0.0202	0.0200	0.8	20.0
Chloroethane	Ave	0.2186	0.2331	0.0500	0.0213	0.0200	6.7	20.0
Dichlorofluoromethane	Ave	0.5919	0.5918		0.0200	0.0200	-0.0	20.0
Trichlorofluoromethane	Ave	0.4159	0.4116	0.1000	0.0198	0.0200	-1.1	20.0
Ethyl ether	Ave	0.2501	0.2556		0.0204	0.0200	2.2	20.0
Acrolein	Ave	0.0337	0.0396		0.117	0.100	17.5	50.0
1,1-Dichloroethene	Ave	0.2878	0.2795	0.1000	0.0194	0.0200	-2.9	20.0
1,1,2-Trichloro-1,2,2-trifluoroethane	Lin1		0.1533	0.0500	0.0174	0.0200	-13.2	20.0
Acetone	Lin1		0.0696	0.0100	0.0321	0.0400	-19.8	50.0
Iodomethane	Ave	0.4621	0.4372		0.0189	0.0200	-5.4	20.0
Carbon disulfide	Ave	0.9514	0.8428	0.1000	0.0177	0.0200	-11.4	20.0
3-Chloro-1-propene	Ave	0.2013	0.2425		0.0241	0.0200	20.5*	20.0
Methyl acetate	Ave	0.1624	0.1554	0.1000	0.0957	0.100	-4.3	20.0
Methylene Chloride	Lin1		0.3421	0.1000	0.0205	0.0200	2.4	50.0
tert-Butyl alcohol (TBA)	Lin1		0.0196		0.202	0.200	0.8	50.0
Acrylonitrile	Ave	0.0864	0.0848		0.196	0.200	-1.9	20.0
trans-1,2-Dichloroethene	Ave	0.3161	0.3170	0.1000	0.0201	0.0200	0.3	20.0
Methyl tert-butyl ether	Ave	0.8308	0.8348	0.1000	0.0201	0.0200	0.5	20.0
Hexane	Ave	0.2897	0.2684		0.0185	0.0200	-7.4	20.0
1,1-Dichloroethane	Ave	0.5224	0.5289	0.2000	0.0202	0.0200	1.2	20.0
Vinyl acetate	Ave	0.4093	0.4128		0.0202	0.0200	0.9	50.0
2,2-Dichloropropane	Ave	0.3598	0.3379		0.0188	0.0200	-6.1	20.0
cis-1,2-Dichloroethene	Ave	0.3518	0.3547	0.1000	0.0202	0.0200	0.8	20.0
2-Butanone (MEK)	Ave	0.0989	0.0855	0.0100	0.0346	0.0400	-13.6	20.0
Bromochloromethane	Ave	0.1468	0.1543		0.0210	0.0200	5.1	20.0
Tetrahydrofuran	Ave	0.0577	0.0579		0.0401	0.0400	0.3	20.0
Chloroform	Ave	0.5317	0.5428	0.2000	0.0204	0.0200	2.1	20.0
1,1,1-Trichloroethane	Ave	0.4368	0.4432	0.1000	0.0203	0.0200	1.5	20.0
Cyclohexane	Ave	0.4257	0.3980	0.1000	0.0187	0.0200	-6.5	20.0
1,1-Dichloropropene	Ave	0.3946	0.4168		0.0211	0.0200	5.6	20.0
Carbon tetrachloride	Ave	0.3605	0.3553	0.1000	0.0197	0.0200	-1.4	20.0
Isobutyl alcohol	Ave	0.0063	0.0067		0.531	0.500	6.3	20.0
1,2-Dichloroethane	Ave	0.3955	0.4072	0.1000	0.0206	0.0200	2.9	20.0
Benzene	Ave	1.238	1.256	0.5000	0.0203	0.0200	1.4	20.0
n-Heptane	Lin1		0.1419		0.0184	0.0200	-8.2	20.0
Trichloroethene	Ave	0.3129	0.3131	0.1500	0.0200	0.0200	0.0	20.0

FORM VII
GC/MS VOA CONTINUING CALIBRATION DATA

Lab Name: TestAmerica Canton Job No.: 240-81698-1

SDG No.:

Lab Sample ID: ICV 240-272263/20 Calibration Date: 03/29/2017 19:27

Instrument ID: A3UX16 Calib Start Date: 03/29/2017 14:02

GC Column: DB-624 ID: 0.18(mm) Calib End Date: 03/29/2017 15:56

Lab File ID: UXM1402.D Conc. Units: ng/uL Heated Purge: (Y/N) N

ANALYTE	CURVE TYPE	AVE RRF	RRF	MIN RRF	CALC AMOUNT	SPIKE AMOUNT	%D	MAX %D
Methylcyclohexane	Ave	0.3990	0.3824	0.1000	0.0192	0.0200	-4.2	20.0
1,2-Dichloropropane	Ave	0.2764	0.2828	0.1000	0.0205	0.0200	2.3	20.0
Dibromomethane	Ave	0.1648	0.1637		0.0199	0.0200	-0.6	20.0
1,4-Dioxane	Ave	0.0024	0.0024		0.396	0.400	-1.0	50.0
Bromodichloromethane	Ave	0.3799	0.3911	0.1500	0.0206	0.0200	3.0	20.0
2-Chloroethyl vinyl ether	Ave	0.1413	0.1427		0.0202	0.0200	1.0	20.0
cis-1,3-Dichloropropene	Ave	0.4579	0.4754	0.1500	0.0208	0.0200	3.8	20.0
4-Methyl-2-pentanone (MIBK)	Ave	0.2043	0.2065	0.0500	0.0404	0.0400	1.1	20.0
Toluene	Ave	1.523	1.556	0.4000	0.0204	0.0200	2.2	20.0
trans-1,3-Dichloropropene	Ave	0.4656	0.4662	0.1000	0.0200	0.0200	0.1	20.0
Ethyl methacrylate	Ave	0.3726	0.3982		0.0214	0.0200	6.8	20.0
1,1,2-Trichloroethane	Ave	0.2654	0.2798	0.1000	0.0211	0.0200	5.4	20.0
1,3-Dichloropropane	Ave	0.4781	0.4821		0.0202	0.0200	0.8	20.0
Tetrachloroethene	Ave	0.2566	0.2648	0.1500	0.0206	0.0200	3.2	20.0
2-Hexanone	Ave	0.1699	0.1662	0.0500	0.0391	0.0400	-2.2	20.0
Dibromochloromethane	Ave	0.3007	0.3087		0.0205	0.0200	2.7	20.0
1,2-Dibromoethane	Ave	0.2584	0.2744		0.0212	0.0200	6.2	20.0
Chlorobenzene	Ave	0.9683	0.9766	0.3000	0.0202	0.0200	0.9	20.0
1,1,1,2-Tetrachloroethane	Ave	0.3358	0.3543		0.0211	0.0200	5.5	20.0
Ethylbenzene	Ave	0.5186	0.5447		0.0210	0.0200	5.0	20.0
m-Xylene & p-Xylene	Ave	0.6562	0.6832		0.0208	0.0200	4.1	20.0
o-Xylene	Ave	0.6658	0.6969		0.0209	0.0200	4.7	20.0
Styrene	Ave	1.131	1.212	0.3000	0.0214	0.0200	7.1	20.0
Bromoform	Ave	0.1830	0.1912	0.1000	0.0209	0.0200	4.5	20.0
Isopropylbenzene	Ave	1.648	1.723	0.1000	0.0209	0.0200	4.5	20.0
1,1,2,2-Tetrachloroethane	Ave	0.5816	0.6059	0.3000	0.0208	0.0200	4.2	20.0
Bromobenzene	Ave	0.6921	0.7158		0.0207	0.0200	3.4	20.0
1,2,3-Trichloropropane	Ave	0.1791	0.1976		0.0221	0.0200	10.3	20.0
trans-1,4-Dichloro-2-butene	Ave	0.1620	0.1763		0.0218	0.0200	8.8	20.0
N-Propylbenzene	Ave	0.7108	0.7354		0.0207	0.0200	3.5	20.0
2-Chlorotoluene	Ave	0.6372	0.6789		0.0213	0.0200	6.5	20.0
1,3,5-Trimethylbenzene	Ave	2.250	2.355		0.0209	0.0200	4.7	20.0
4-Chlorotoluene	Ave	0.6808	0.7194		0.0211	0.0200	5.7	20.0
tert-Butylbenzene	Ave	1.832	1.861		0.0203	0.0200	1.6	20.0
1,2,4-Trimethylbenzene	Ave	2.397	2.511		0.0210	0.0200	4.8	20.0
sec-Butylbenzene	Ave	2.517	2.551		0.0203	0.0200	1.3	20.0
1,3-Dichlorobenzene	Ave	1.358	1.413	0.6000	0.0208	0.0200	4.0	20.0
p-Isopropyltoluene	Ave	2.194	2.236		0.0204	0.0200	1.9	20.0
1,4-Dichlorobenzene	Ave	1.421	1.444	0.5000	0.0203	0.0200	1.6	20.0
n-Butylbenzene	Ave	1.821	1.891		0.0208	0.0200	3.8	20.0
1,2-Dichlorobenzene	Ave	1.283	1.343	0.4000	0.0209	0.0200	4.7	20.0

FORM VII 8260C

FORM VII
GC/MS VOA CONTINUING CALIBRATION DATA

Lab Name: TestAmerica Canton Job No.: 240-81698-1

SDG No.:

Lab Sample ID: ICV 240-272263/20 Calibration Date: 03/29/2017 19:27

Instrument ID: A3UX16 Calib Start Date: 03/29/2017 14:02

GC Column: DB-624 ID: 0.18(mm) Calib End Date: 03/29/2017 15:56

Lab File ID: UXM1402.D Conc. Units: ng/uL Heated Purge: (Y/N) N

ANALYTE	CURVE TYPE	AVE RRF	RRF	MIN RRF	CALC AMOUNT	SPIKE AMOUNT	%D	MAX %D
1,2-Dibromo-3-Chloropropane	Lin1		0.1071	0.0500	0.0207	0.0200	3.4	50.0
1,2,4-Trichlorobenzene	Ave	0.6560	0.6678	0.2000	0.0204	0.0200	1.8	50.0
Hexachlorobutadiene	Ave	0.2651	0.2451		0.0185	0.0200	-7.6	20.0
Naphthalene	Ave	1.583	1.643		0.0208	0.0200	3.8	50.0
1,2,3-Trichlorobenzene	Ave	0.5446	0.5563		0.0204	0.0200	2.1	20.0
Dibromofluoromethane (Surr)	Ave	0.2661	0.2578		0.0194	0.0200	-3.1	20.0
1,2-Dichloroethane-d4 (Surr)	Ave	0.3237	0.3176		0.0196	0.0200	-1.9	20.0
Toluene-d8 (Surr)	Ave	1.277	1.236		0.0194	0.0200	-3.1	20.0
4-Bromofluorobenzene (Surr)	Ave	0.5021	0.4880		0.0194	0.0200	-2.8	20.0

FORM VII
GC/MS VOA CONTINUING CALIBRATION DATA

Lab Name: TestAmerica Canton Job No.: 240-81698-1

SDG No.:

Lab Sample ID: ICV 240-272263/21 Calibration Date: 03/29/2017 19:50

Instrument ID: A3UX16 Calib Start Date: 03/29/2017 16:47

GC Column: DB-624 ID: 0.18(mm) Calib End Date: 03/29/2017 18:41

Lab File ID: UXM1403.D Conc. Units: ng/uL Heated Purge: (Y/N) N

ANALYTE	CURVE TYPE	AVE RRF	RRF	MIN RRF	CALC AMOUNT	SPIKE AMOUNT	%D	MAX %D
Acetonitrile	Ave	0.0293	0.0273		0.186	0.200	-7.0	20.0
Diisopropyl ether	Ave	0.2705	0.2820		0.0209	0.0200	4.3	20.0
2-Chloro-1,3-butadiene	Ave	0.4956	0.4906		0.0198	0.0200	-1.0	20.0
Ethyl t-butyl ether	Ave	0.9325	0.9269		0.0199	0.0200	-0.6	20.0
Propionitrile	Ave	0.0305	0.0313		0.205	0.200	2.7	20.0
Ethyl acetate	Ave	0.1773	0.1868		0.0421	0.0400	5.3	50.0
Methacrylonitrile	Ave	0.1364	0.1418		0.208	0.200	4.0	20.0
Tert-amyl methyl ether	Ave	0.8679	0.8922		0.0206	0.0200	2.8	20.0
n-Butanol	Ave	0.0050	0.0052		0.517	0.500	3.5	20.0
Ethyl acrylate	Ave	0.2470	0.2770		0.0224	0.0200	12.1	20.0
Methyl methacrylate	Ave	0.1888	0.2036		0.0431	0.0400	7.8	20.0
2-Nitropropane	Ave	0.0578	0.0619		0.0428	0.0400	7.1	20.0
n-Butyl acetate	Ave	0.3363	0.3632		0.0216	0.0200	8.0	30.0
1-Chlorohexane	Ave	0.4227	0.4159		0.0197	0.0200	-1.6	20.0
Cyclohexanone	Ave	0.0140	0.0142		0.202	0.200	1.2	20.0
Pentachloroethane	Lin1		0.2305		0.0379	0.0400	-5.3	20.0
1,2,3-Trimethylbenzene	Ave	2.617	2.576		0.0197	0.0200	-1.6	20.0
Benzyl chloride	Lin1		0.2580		0.0181	0.0200	-9.4	20.0
1,3,5-Trichlorobenzene	Ave	0.7675	0.7354		0.0192	0.0200	-4.2	20.0
2-Methylnaphthalene	Lin1		0.4733		0.0354	0.0400	-11.6	20.0

FORM VII
GC/MS VOA CONTINUING CALIBRATION DATA

Lab Name: TestAmerica Canton Job No.: 240-81698-1

SDG No.:

Lab Sample ID: ICV 240-272263/21 Calibration Date: 03/29/2017 19:50

Instrument ID: A3UX16 Calib Start Date: 03/29/2017 14:02

GC Column: DB-624 ID: 0.18(mm) Calib End Date: 03/29/2017 15:56

Lab File ID: UXM1403.D Conc. Units: ng/uL Heated Purge: (Y/N) N

ANALYTE	CURVE TYPE	AVE RRF	RRF	MIN RRF	CALC AMOUNT	SPIKE AMOUNT	%D	MAX %D
Dibromofluoromethane (Surr)	Ave	0.2661	0.2507		0.0188	0.0200	-5.8	20.0
1,2-Dichloroethane-d4 (Surr)	Ave	0.3237	0.3091		0.0191	0.0200	-4.5	20.0
Toluene-d8 (Surr)	Ave	1.277	1.247		0.0195	0.0200	-2.3	20.0
4-Bromofluorobenzene (Surr)	Ave	0.5021	0.4775		0.0190	0.0200	-4.9	20.0

FORM VII
GC/MS VOA CONTINUING CALIBRATION DATA

Lab Name: TestAmerica Canton Job No.: 240-81698-1

SDG No.:

Lab Sample ID: CCVIS 240-285874/2 Calibration Date: 07/05/2017 06:57

Instrument ID: A3UX16 Calib Start Date: 03/29/2017 14:02

GC Column: DB-624 ID: 0.18(mm) Calib End Date: 03/29/2017 15:56

Lab File ID: UXM4228.D Conc. Units: ng/uL Heated Purge: (Y/N) N

ANALYTE	CURVE TYPE	AVE RRF	RRF	MIN RRF	CALC AMOUNT	SPIKE AMOUNT	%D	MAX %D
Dichlorodifluoromethane	Ave	0.3166	0.2483	0.1000	0.0157	0.0200	-21.6*	20.0
Chloromethane	Ave	0.3878	0.3214	0.1000	0.0166	0.0200	-17.1	20.0
Vinyl chloride	Ave	0.3718	0.3495	0.1000	0.0188	0.0200	-6.0	20.0
Butadiene	Ave	0.2937	0.3264		0.0222	0.0200	11.2	20.0
Bromomethane	Ave	0.2332	0.2011	0.0500	0.0172	0.0200	-13.8	20.0
Chloroethane	Ave	0.2186	0.2179	0.0500	0.0199	0.0200	-0.3	20.0
Dichlorofluoromethane	Ave	0.5919	0.5039		0.0170	0.0200	-14.9	20.0
Trichlorofluoromethane	Ave	0.4159	0.3353	0.1000	0.0161	0.0200	-19.4	20.0
Ethyl ether	Ave	0.2501	0.2439		0.0195	0.0200	-2.5	20.0
Acrolein	Ave	0.0337	0.0212		0.0628	0.100	-37.2	50.0
1,1-Dichloroethene	Ave	0.2878	0.2583	0.1000	0.0180	0.0200	-10.2	20.0
1,1,2-Trichloro-1,2,2-trifluoroethane	Lin1		0.1502	0.0500	0.0170	0.0200	-15.0	20.0
Acetone	Lin1		0.0674	0.0100	0.0310	0.0400	-22.4	50.0
Iodomethane	Ave	0.4621	0.4093		0.0177	0.0200	-11.4	20.0
Carbon disulfide	Ave	0.9514	0.9177	0.1000	0.0193	0.0200	-3.5	20.0
3-Chloro-1-propene	Ave	0.2013	0.1889		0.0188	0.0200	-6.1	20.0
Methyl acetate	Ave	0.1624	0.1687	0.1000	0.0416	0.0400	3.9	20.0
Methylene Chloride	Lin1		0.3078	0.1000	0.0183	0.0200	-8.7	50.0
tert-Butyl alcohol (TBA)	Lin1		0.0189		0.194	0.200	-3.1	50.0
Acrylonitrile	Ave	0.0864	0.0880		0.204	0.200	1.8	20.0
trans-1,2-Dichloroethene	Ave	0.3161	0.3004	0.1000	0.0190	0.0200	-5.0	20.0
Methyl tert-butyl ether	Ave	0.8308	0.7684	0.1000	0.0185	0.0200	-7.5	20.0
Hexane	Ave	0.2897	0.2520		0.0174	0.0200	-13.0	20.0
1,1-Dichloroethane	Ave	0.5224	0.5202	0.2000	0.0199	0.0200	-0.4	20.0
Vinyl acetate	Ave	0.4093	0.4356		0.0213	0.0200	6.4	50.0
2,2-Dichloropropane	Ave	0.3598	0.3336		0.0185	0.0200	-7.3	20.0
cis-1,2-Dichloroethene	Ave	0.3518	0.3305	0.1000	0.0188	0.0200	-6.1	20.0
2-Butanone (MEK)	Ave	0.0989	0.1011	0.0100	0.0409	0.0400	2.2	20.0
Bromochloromethane	Ave	0.1468	0.1444		0.0197	0.0200	-1.6	20.0
Tetrahydrofuran	Ave	0.0577	0.0672		0.0466	0.0400	16.6	20.0
Chloroform	Ave	0.5317	0.4880	0.2000	0.0184	0.0200	-8.2	20.0
1,1,1-Trichloroethane	Ave	0.4368	0.3946	0.1000	0.0181	0.0200	-9.7	20.0
Cyclohexane	Ave	0.4257	0.3860	0.1000	0.0181	0.0200	-9.3	20.0
1,1-Dichloropropene	Ave	0.3946	0.4041		0.0205	0.0200	2.4	20.0
Carbon tetrachloride	Ave	0.3605	0.3159	0.1000	0.0175	0.0200	-12.4	20.0
Isobutyl alcohol	Ave	0.0063	0.0065		0.511	0.500	2.1	20.0
1,2-Dichloroethane	Ave	0.3955	0.3734	0.1000	0.0189	0.0200	-5.6	20.0
Benzene	Ave	1.238	1.234	0.5000	0.0199	0.0200	-0.3	20.0
n-Heptane	Lin1		0.1328		0.0168	0.0200	-15.9	20.0
Trichloroethene	Ave	0.3129	0.2962	0.1500	0.0189	0.0200	-5.3	20.0

FORM VII
GC/MS VOA CONTINUING CALIBRATION DATA

Lab Name: TestAmerica Canton Job No.: 240-81698-1

SDG No.:

Lab Sample ID: CCVIS 240-285874/2 Calibration Date: 07/05/2017 06:57

Instrument ID: A3UX16 Calib Start Date: 03/29/2017 14:02

GC Column: DB-624 ID: 0.18(mm) Calib End Date: 03/29/2017 15:56

Lab File ID: UXM4228.D Conc. Units: ng/uL Heated Purge: (Y/N) N

ANALYTE	CURVE TYPE	AVE RRF	RRF	MIN RRF	CALC AMOUNT	SPIKE AMOUNT	%D	MAX %D
Methylcyclohexane	Ave	0.3990	0.3245	0.1000	0.0163	0.0200	-18.7	20.0
1,2-Dichloropropane	Ave	0.2764	0.2896	0.1000	0.0210	0.0200	4.8	20.0
Dibromomethane	Ave	0.1648	0.1559		0.0189	0.0200	-5.4	20.0
1,4-Dioxane	Ave	0.0024	0.0024		0.396	0.400	-0.9	50.0
Bromodichloromethane	Ave	0.3799	0.3572	0.1500	0.0188	0.0200	-6.0	20.0
2-Chloroethyl vinyl ether	Ave	0.1413	0.1304		0.0369	0.0400	-7.7	20.0
cis-1,3-Dichloropropene	Ave	0.4579	0.4448	0.1500	0.0194	0.0200	-2.9	20.0
4-Methyl-2-pentanone (MIBK)	Ave	0.2043	0.2037	0.0500	0.0399	0.0400	-0.3	20.0
Toluene	Ave	1.523	1.738	0.4000	0.0228	0.0200	14.1	20.0
trans-1,3-Dichloropropene	Ave	0.4656	0.5218	0.1000	0.0224	0.0200	12.1	20.0
Ethyl methacrylate	Ave	0.3726	0.4515		0.0242	0.0200	21.2*	20.0
1,1,2-Trichloroethane	Ave	0.2654	0.3152	0.1000	0.0238	0.0200	18.8	20.0
1,3-Dichloropropane	Ave	0.4781	0.5719		0.0239	0.0200	19.6	20.0
Tetrachloroethene	Ave	0.2566	0.2877	0.1500	0.0224	0.0200	12.1	20.0
2-Hexanone	Ave	0.1699	0.1881	0.0500	0.0443	0.0400	10.7	20.0
Dibromochloromethane	Ave	0.3007	0.3216		0.0214	0.0200	7.0	20.0
1,2-Dibromoethane	Ave	0.2584	0.2934		0.0227	0.0200	13.5	20.0
Chlorobenzene	Ave	0.9683	1.069	0.3000	0.0221	0.0200	10.4	20.0
1,1,1,2-Tetrachloroethane	Ave	0.3358	0.3513		0.0209	0.0200	4.6	20.0
Ethylbenzene	Ave	0.5186	0.5924		0.0228	0.0200	14.2	20.0
m-Xylene & p-Xylene	Ave	0.6562	0.7227		0.0220	0.0200	10.1	20.0
o-Xylene	Ave	0.6658	0.7165		0.0215	0.0200	7.6	20.0
Styrene	Ave	1.131	1.218	0.3000	0.0215	0.0200	7.6	20.0
Bromoform	Ave	0.1830	0.1788	0.1000	0.0195	0.0200	-2.3	20.0
Isopropylbenzene	Ave	1.648	1.715	0.1000	0.0208	0.0200	4.0	20.0
1,1,2,2-Tetrachloroethane	Ave	0.5816	0.6986	0.3000	0.0240	0.0200	20.1*	20.0
Bromobenzene	Ave	0.6921	0.7676		0.0222	0.0200	10.9	20.0
1,2,3-Trichloropropane	Ave	0.1791	0.2096		0.0234	0.0200	17.0	20.0
trans-1,4-Dichloro-2-butene	Ave	0.1620	0.1867		0.0231	0.0200	15.3	20.0
N-Propylbenzene	Ave	0.7108	0.8168		0.0230	0.0200	14.9	20.0
2-Chlorotoluene	Ave	0.6372	0.7192		0.0226	0.0200	12.9	20.0
1,3,5-Trimethylbenzene	Ave	2.250	2.470		0.0220	0.0200	9.8	20.0
4-Chlorotoluene	Ave	0.6808	0.7679		0.0226	0.0200	12.8	20.0
tert-Butylbenzene	Ave	1.832	1.956		0.0214	0.0200	6.8	20.0
1,2,4-Trimethylbenzene	Ave	2.397	2.645		0.0221	0.0200	10.4	20.0
sec-Butylbenzene	Ave	2.517	2.653		0.0211	0.0200	5.4	20.0
1,3-Dichlorobenzene	Ave	1.358	1.437	0.6000	0.0212	0.0200	5.8	20.0
p-Isopropyltoluene	Ave	2.194	2.352		0.0214	0.0200	7.2	20.0
1,4-Dichlorobenzene	Ave	1.421	1.491	0.5000	0.0210	0.0200	4.9	20.0
n-Butylbenzene	Ave	1.821	1.930		0.0212	0.0200	6.0	20.0
1,2-Dichlorobenzene	Ave	1.283	1.406	0.4000	0.0219	0.0200	9.6	20.0

FORM VII
GC/MS VOA CONTINUING CALIBRATION DATA

Lab Name: TestAmerica Canton Job No.: 240-81698-1

SDG No.:

Lab Sample ID: CCVIS 240-285874/2 Calibration Date: 07/05/2017 06:57

Instrument ID: A3UX16 Calib Start Date: 03/29/2017 14:02

GC Column: DB-624 ID: 0.18(mm) Calib End Date: 03/29/2017 15:56

Lab File ID: UXM4228.D Conc. Units: ng/uL Heated Purge: (Y/N) N

ANALYTE	CURVE TYPE	AVE RRF	RRF	MIN RRF	CALC AMOUNT	SPIKE AMOUNT	%D	MAX %D
1,2-Dibromo-3-Chloropropane	Lin1		0.1095	0.0500	0.0211	0.0200	5.7	50.0
1,2,4-Trichlorobenzene	Ave	0.6560	0.6688	0.2000	0.0204	0.0200	1.9	50.0
Hexachlorobutadiene	Ave	0.2651	0.2381		0.0180	0.0200	-10.2	20.0
Naphthalene	Ave	1.583	1.744		0.0220	0.0200	10.2	50.0
1,2,3-Trichlorobenzene	Ave	0.5446	0.5951		0.0219	0.0200	9.3	20.0
Dibromofluoromethane (Surr)	Ave	0.2661	0.2462		0.0185	0.0200	-7.5	20.0
1,2-Dichloroethane-d4 (Surr)	Ave	0.3237	0.2987		0.0185	0.0200	-7.7	20.0
Toluene-d8 (Surr)	Ave	1.277	1.468		0.0230	0.0200	15.0	20.0
4-Bromofluorobenzene (Surr)	Ave	0.5021	0.5204		0.0207	0.0200	3.6	20.0

FORM VII
GC/MS VOA CONTINUING CALIBRATION DATA

Lab Name: TestAmerica Canton Job No.: 240-81698-1

SDG No.:

Lab Sample ID: CCV 240-285874/4 Calibration Date: 07/05/2017 07:43

Instrument ID: A3UX16 Calib Start Date: 03/29/2017 16:47

GC Column: DB-624 ID: 0.18(mm) Calib End Date: 03/29/2017 18:41

Lab File ID: UXM4230.D Conc. Units: ng/uL Heated Purge: (Y/N) N

ANALYTE	CURVE TYPE	AVE RRF	RRF	MIN RRF	CALC AMOUNT	SPIKE AMOUNT	%D	MAX %D
Acetonitrile	Ave	0.0293	0.0267		0.182	0.200	-9.0	20.0
Diisopropyl ether	Ave	0.2705	0.2551		0.0189	0.0200	-5.7	20.0
2-Chloro-1,3-butadiene	Ave	0.4956	0.4372		0.0176	0.0200	-11.8	20.0
Ethyl t-butyl ether	Ave	0.9325	0.8053		0.0173	0.0200	-13.6	20.0
Propionitrile	Ave	0.0305	0.0299		0.196	0.200	-2.1	20.0
Ethyl acetate	Ave	0.1773	0.1860		0.0420	0.0400	4.9	50.0
Methacrylonitrile	Ave	0.1364	0.1373		0.201	0.200	0.7	20.0
Tert-amyl methyl ether	Ave	0.8679	0.7434		0.0171	0.0200	-14.3	20.0
n-Butanol	Ave	0.0050	0.0049		0.490	0.500	-2.1	20.0
Ethyl acrylate	Ave	0.2470	0.2580		0.0209	0.0200	4.4	20.0
Methyl methacrylate	Ave	0.1888	0.1861		0.0394	0.0400	-1.4	20.0
2-Nitropropane	Ave	0.0578	0.0459		0.0318	0.0400	-20.6*	20.0
n-Butyl acetate	Ave	0.3363	0.2962		0.0176	0.0200	-11.9	20.0
1-Chlorohexane	Ave	0.4227	0.4078		0.0193	0.0200	-3.5	20.0
Cyclohexanone	Ave	0.0140	0.0146		0.209	0.200	4.4	20.0
Pentachloroethane	Lin1		0.2093		0.0377	0.0400	-5.6	20.0
1,2,3-Trimethylbenzene	Ave	2.617	2.649		0.0202	0.0200	1.2	20.0
Benzyl chloride	Lin1		0.2375		0.0193	0.0200	-3.3	20.0
1,3,5-Trichlorobenzene	Ave	0.7675	0.7396		0.0193	0.0200	-3.6	20.0
2-Methylnaphthalene	Lin1		0.4516		0.0338	0.0400	-15.6	20.0

FORM VII
GC/MS VOA CONTINUING CALIBRATION DATA

Lab Name: TestAmerica Canton Job No.: 240-81698-1

SDG No.:

Lab Sample ID: CCVIS 240-286045/2 Calibration Date: 07/06/2017 08:06

Instrument ID: A3UX16 Calib Start Date: 03/29/2017 14:02

GC Column: DB-624 ID: 0.18(mm) Calib End Date: 03/29/2017 15:56

Lab File ID: UXM4283.D Conc. Units: ng/uL Heated Purge: (Y/N) N

ANALYTE	CURVE TYPE	AVE RRF	RRF	MIN RRF	CALC AMOUNT	SPIKE AMOUNT	%D	MAX %D
Dichlorodifluoromethane	Ave	0.3166	0.2764	0.1000	0.0175	0.0200	-12.7	20.0
Chloromethane	Ave	0.3878	0.3091	0.1000	0.0159	0.0200	-20.3*	20.0
Vinyl chloride	Ave	0.3718	0.3397	0.1000	0.0183	0.0200	-8.6	20.0
Butadiene	Ave	0.2937	0.3428		0.0233	0.0200	16.7	20.0
Bromomethane	Ave	0.2332	0.2006	0.0500	0.0172	0.0200	-13.9	20.0
Chloroethane	Ave	0.2186	0.2155	0.0500	0.0197	0.0200	-1.4	20.0
Dichlorofluoromethane	Ave	0.5919	0.4993		0.0169	0.0200	-15.6	20.0
Trichlorofluoromethane	Ave	0.4159	0.3498	0.1000	0.0168	0.0200	-15.9	20.0
Ethyl ether	Ave	0.2501	0.2304		0.0184	0.0200	-7.9	20.0
Acrolein	Ave	0.0337	0.0188		0.0556	0.100	-44.4	50.0
1,1-Dichloroethene	Ave	0.2878	0.2540	0.1000	0.0176	0.0200	-11.8	20.0
1,1,2-Trichloro-1,2,2-trifluoroethane	Lin1		0.1787	0.0500	0.0202	0.0200	0.9	20.0
Acetone	Lin1		0.0640	0.0100	0.0294	0.0400	-26.4	50.0
Iodomethane	Ave	0.4621	0.3969		0.0172	0.0200	-14.1	20.0
Carbon disulfide	Ave	0.9514	0.8890	0.1000	0.0187	0.0200	-6.6	20.0
3-Chloro-1-propene	Ave	0.2013	0.1834		0.0182	0.0200	-8.9	20.0
Methyl acetate	Ave	0.1624	0.1609	0.1000	0.0396	0.0400	-0.9	20.0
Methylene Chloride	Lin1		0.3076	0.1000	0.0182	0.0200	-8.8	50.0
tert-Butyl alcohol (TBA)	Lin1		0.0174		0.178	0.200	-10.9	50.0
Acrylonitrile	Ave	0.0864	0.0831		0.192	0.200	-3.8	20.0
trans-1,2-Dichloroethene	Ave	0.3161	0.2909	0.1000	0.0184	0.0200	-7.9	20.0
Methyl tert-butyl ether	Ave	0.8308	0.7319	0.1000	0.0176	0.0200	-11.9	20.0
Hexane	Ave	0.2897	0.3066		0.0212	0.0200	5.8	20.0
1,1-Dichloroethane	Ave	0.5224	0.5113	0.2000	0.0196	0.0200	-2.1	20.0
Vinyl acetate	Ave	0.4093	0.3952		0.0193	0.0200	-3.4	50.0
2,2-Dichloropropane	Ave	0.3598	0.3356		0.0187	0.0200	-6.7	20.0
cis-1,2-Dichloroethene	Ave	0.3518	0.3206	0.1000	0.0182	0.0200	-8.9	20.0
2-Butanone (MEK)	Ave	0.0989	0.0920	0.0100	0.0372	0.0400	-6.9	20.0
Bromochloromethane	Ave	0.1468	0.1362		0.0186	0.0200	-7.2	20.0
Tetrahydrofuran	Ave	0.0577	0.0595		0.0413	0.0400	3.2	20.0
Chloroform	Ave	0.5317	0.4758	0.2000	0.0179	0.0200	-10.5	20.0
1,1,1-Trichloroethane	Ave	0.4368	0.3929	0.1000	0.0180	0.0200	-10.0	20.0
Cyclohexane	Ave	0.4257	0.4411	0.1000	0.0207	0.0200	3.6	20.0
1,1-Dichloropropene	Ave	0.3946	0.4024		0.0204	0.0200	2.0	20.0
Carbon tetrachloride	Ave	0.3605	0.3212	0.1000	0.0178	0.0200	-10.9	20.0
Isobutyl alcohol	Ave	0.0063	0.0060		0.476	0.500	-4.8	20.0
1,2-Dichloroethane	Ave	0.3955	0.3585	0.1000	0.0181	0.0200	-9.4	20.0
Benzene	Ave	1.238	1.215	0.5000	0.0196	0.0200	-1.9	20.0
n-Heptane	Lin1		0.1552		0.0206	0.0200	3.0	20.0
Trichloroethene	Ave	0.3129	0.2866	0.1500	0.0183	0.0200	-8.4	20.0

FORM VII
GC/MS VOA CONTINUING CALIBRATION DATA

Lab Name: TestAmerica Canton Job No.: 240-81698-1

SDG No.:

Lab Sample ID: CCVIS 240-286045/2 Calibration Date: 07/06/2017 08:06

Instrument ID: A3UX16 Calib Start Date: 03/29/2017 14:02

GC Column: DB-624 ID: 0.18(mm) Calib End Date: 03/29/2017 15:56

Lab File ID: UXM4283.D Conc. Units: ng/uL Heated Purge: (Y/N) N

ANALYTE	CURVE TYPE	AVE RRF	RRF	MIN RRF	CALC AMOUNT	SPIKE AMOUNT	%D	MAX %D
Methylcyclohexane	Ave	0.3990	0.3787	0.1000	0.0190	0.0200	-5.1	20.0
1,2-Dichloropropane	Ave	0.2764	0.2780	0.1000	0.0201	0.0200	0.6	20.0
Dibromomethane	Ave	0.1648	0.1487		0.0181	0.0200	-9.7	20.0
1,4-Dioxane	Ave	0.0024	0.0022		0.372	0.400	-6.9	50.0
Bromodichloromethane	Ave	0.3799	0.3478	0.1500	0.0183	0.0200	-8.5	20.0
2-Chloroethyl vinyl ether	Ave	0.1413	0.1399		0.0396	0.0400	-0.9	20.0
cis-1,3-Dichloropropene	Ave	0.4579	0.4301	0.1500	0.0188	0.0200	-6.1	20.0
4-Methyl-2-pentanone (MIBK)	Ave	0.2043	0.1928	0.0500	0.0378	0.0400	-5.6	20.0
Toluene	Ave	1.523	1.638	0.4000	0.0215	0.0200	7.5	20.0
trans-1,3-Dichloropropene	Ave	0.4656	0.4822	0.1000	0.0207	0.0200	3.5	20.0
Ethyl methacrylate	Ave	0.3726	0.4112		0.0221	0.0200	10.3	20.0
1,1,2-Trichloroethane	Ave	0.2654	0.2908	0.1000	0.0219	0.0200	9.6	20.0
1,3-Dichloropropane	Ave	0.4781	0.5356		0.0224	0.0200	12.0	20.0
Tetrachloroethene	Ave	0.2566	0.2690	0.1500	0.0210	0.0200	4.9	20.0
2-Hexanone	Ave	0.1699	0.1680	0.0500	0.0396	0.0400	-1.1	20.0
Dibromochloromethane	Ave	0.3007	0.3010		0.0200	0.0200	0.1	20.0
1,2-Dibromoethane	Ave	0.2584	0.2730		0.0211	0.0200	5.6	20.0
Chlorobenzene	Ave	0.9683	1.003	0.3000	0.0207	0.0200	3.5	20.0
1,1,1,2-Tetrachloroethane	Ave	0.3358	0.3260		0.0194	0.0200	-2.9	20.0
Ethylbenzene	Ave	0.5186	0.5495		0.0212	0.0200	5.9	20.0
m-Xylene & p-Xylene	Ave	0.6562	0.6791		0.0207	0.0200	3.5	20.0
o-Xylene	Ave	0.6658	0.6687		0.0201	0.0200	0.4	20.0
Styrene	Ave	1.131	1.149	0.3000	0.0203	0.0200	1.5	20.0
Bromoform	Ave	0.1830	0.1666	0.1000	0.0182	0.0200	-9.0	20.0
Isopropylbenzene	Ave	1.648	1.585	0.1000	0.0192	0.0200	-3.8	20.0
1,1,2,2-Tetrachloroethane	Ave	0.5816	0.6370	0.3000	0.0219	0.0200	9.5	20.0
Bromobenzene	Ave	0.6921	0.7087		0.0205	0.0200	2.4	20.0
1,2,3-Trichloropropane	Ave	0.1791	0.1957		0.0218	0.0200	9.2	20.0
trans-1,4-Dichloro-2-butene	Ave	0.1620	0.1651		0.0204	0.0200	1.9	20.0
N-Propylbenzene	Ave	0.7108	0.7684		0.0216	0.0200	8.1	20.0
2-Chlorotoluene	Ave	0.6372	0.6802		0.0213	0.0200	6.7	20.0
1,3,5-Trimethylbenzene	Ave	2.250	2.308		0.0205	0.0200	2.6	20.0
4-Chlorotoluene	Ave	0.6808	0.7224		0.0212	0.0200	6.1	20.0
tert-Butylbenzene	Ave	1.832	1.815		0.0198	0.0200	-0.9	20.0
1,2,4-Trimethylbenzene	Ave	2.397	2.467		0.0206	0.0200	2.9	20.0
sec-Butylbenzene	Ave	2.517	2.537		0.0202	0.0200	0.8	20.0
1,3-Dichlorobenzene	Ave	1.358	1.339	0.6000	0.0197	0.0200	-1.4	20.0
p-Isopropyltoluene	Ave	2.194	2.199		0.0201	0.0200	0.3	20.0
1,4-Dichlorobenzene	Ave	1.421	1.386	0.5000	0.0195	0.0200	-2.5	20.0
n-Butylbenzene	Ave	1.821	1.840		0.0202	0.0200	1.0	20.0
1,2-Dichlorobenzene	Ave	1.283	1.296	0.4000	0.0202	0.0200	1.1	20.0

FORM VII
GC/MS VOA CONTINUING CALIBRATION DATA

Lab Name: TestAmerica Canton Job No.: 240-81698-1

SDG No.:

Lab Sample ID: CCVIS 240-286045/2 Calibration Date: 07/06/2017 08:06

Instrument ID: A3UX16 Calib Start Date: 03/29/2017 14:02

GC Column: DB-624 ID: 0.18(mm) Calib End Date: 03/29/2017 15:56

Lab File ID: UXM4283.D Conc. Units: ng/uL Heated Purge: (Y/N) N

ANALYTE	CURVE TYPE	AVE RRF	RRF	MIN RRF	CALC AMOUNT	SPIKE AMOUNT	%D	MAX %D
1,2-Dibromo-3-Chloropropane	Lin1		0.0977	0.0500	0.0189	0.0200	-5.4	50.0
1,2,4-Trichlorobenzene	Ave	0.6560	0.6071	0.2000	0.0185	0.0200	-7.5	50.0
Hexachlorobutadiene	Ave	0.2651	0.2288		0.0173	0.0200	-13.7	20.0
Naphthalene	Ave	1.583	1.532		0.0194	0.0200	-3.2	50.0
1,2,3-Trichlorobenzene	Ave	0.5446	0.5303		0.0195	0.0200	-2.6	20.0
Dibromofluoromethane (Surr)	Ave	0.2661	0.2403		0.0181	0.0200	-9.7	20.0
1,2-Dichloroethane-d4 (Surr)	Ave	0.3237	0.2893		0.0179	0.0200	-10.6	20.0
Toluene-d8 (Surr)	Ave	1.277	1.385		0.0217	0.0200	8.5	20.0
4-Bromofluorobenzene (Surr)	Ave	0.5021	0.4933		0.0197	0.0200	-1.7	20.0

FORM VII
GC/MS VOA CONTINUING CALIBRATION DATA

Lab Name: TestAmerica Canton Job No.: 240-81698-1

SDG No.:

Lab Sample ID: CCV 240-286045/4 Calibration Date: 07/06/2017 08:52

Instrument ID: A3UX16 Calib Start Date: 03/29/2017 16:47

GC Column: DB-624 ID: 0.18(mm) Calib End Date: 03/29/2017 18:41

Lab File ID: UXM4285.D Conc. Units: ng/uL Heated Purge: (Y/N) N

ANALYTE	CURVE TYPE	AVE RRF	RRF	MIN RRF	CALC AMOUNT	SPIKE AMOUNT	%D	MAX %D
Acetonitrile	Ave	0.0293	0.0271		0.185	0.200	-7.6	20.0
Diisopropyl ether	Ave	0.2705	0.2486		0.0184	0.0200	-8.1	20.0
2-Chloro-1,3-butadiene	Ave	0.4956	0.4247		0.0171	0.0200	-14.3	20.0
Ethyl t-butyl ether	Ave	0.9325	0.7863		0.0169	0.0200	-15.7	20.0
Propionitrile	Ave	0.0305	0.0291		0.191	0.200	-4.6	20.0
Ethyl acetate	Ave	0.1773	0.1799		0.0406	0.0400	1.4	50.0
Methacrylonitrile	Ave	0.1364	0.1344		0.197	0.200	-1.5	20.0
Tert-amyl methyl ether	Ave	0.8679	0.7373		0.0170	0.0200	-15.0	20.0
n-Butanol	Ave	0.0050	0.0047		0.470	0.500	-6.0	20.0
Ethyl acrylate	Ave	0.2470	0.2462		0.0199	0.0200	-0.4	20.0
Methyl methacrylate	Ave	0.1888	0.1810		0.0383	0.0400	-4.1	20.0
2-Nitropropane	Ave	0.0578	0.0440		0.0304	0.0400	-24.0*	20.0
n-Butyl acetate	Ave	0.3363	0.2902		0.0173	0.0200	-13.7	20.0
1-Chlorohexane	Ave	0.4227	0.3905		0.0185	0.0200	-7.6	20.0
Cyclohexanone	Ave	0.0140	0.0145		0.207	0.200	3.3	20.0
Pentachloroethane	Lin1		0.2062		0.0372	0.0400	-7.0	20.0
1,2,3-Trimethylbenzene	Ave	2.617	2.538		0.0194	0.0200	-3.0	20.0
Benzyl chloride	Lin1		0.2340		0.0190	0.0200	-4.8	20.0
1,3,5-Trichlorobenzene	Ave	0.7675	0.7130		0.0186	0.0200	-7.1	20.0
2-Methylnaphthalene	Lin1		0.4275		0.0320	0.0400	-20.0	20.0

FORM VII
GC/MS VOA CONTINUING CALIBRATION DATA

Lab Name: TestAmerica Canton Job No.: 240-81698-1

SDG No.:

Lab Sample ID: ICV 240-285694/19 Calibration Date: 07/02/2017 11:10

Instrument ID: A3UX8 Calib Start Date: 07/02/2017 05:21

GC Column: DB-624 ID: 0.18(mm) Calib End Date: 07/02/2017 07:53

Lab File ID: UX80999.D Conc. Units: ng/uL Heated Purge: (Y/N) Y

ANALYTE	CURVE TYPE	AVE RRF	RRF	MIN RRF	CALC AMOUNT	SPIKE AMOUNT	%D	MAX %D
Dichlorodifluoromethane	Ave	0.2036	0.1889	0.1000	0.0232	0.0250	-7.2	20.0
Chloromethane	Ave	0.2933	0.2706	0.1000	0.0231	0.0250	-7.8	20.0
Vinyl chloride	Ave	0.2070	0.1896	0.1000	0.0229	0.0250	-8.4	20.0
Butadiene	Ave	0.2634	0.2085		0.0198	0.0250	-20.8	30.0
Bromomethane	Ave	0.1033	0.0998	0.0500	0.0242	0.0250	-3.3	20.0
Chloroethane	Ave	0.1260	0.1174	0.0500	0.0233	0.0250	-6.8	20.0
Dichlorofluoromethane	Ave	0.3002	0.2716		0.0226	0.0250	-9.5	20.0
Trichlorofluoromethane	Ave	0.2644	0.2398	0.1000	0.0227	0.0250	-9.3	20.0
Ethyl ether	Ave	0.2537	0.2728		0.0269	0.0250	7.5	20.0
Acrolein	Ave	0.0299	0.0329		0.138	0.125	10.1	50.0
1,1-Dichloroethene	Ave	0.1853	0.1808	0.1000	0.0244	0.0250	-2.4	20.0
1,1,2-Trichloro-1,2,2-trifluoroethane	Ave	0.1529	0.1439	0.0500	0.0235	0.0250	-5.9	20.0
Acetone	Lin1		0.1296	0.0100	0.0445	0.0500	-10.9	50.0
Iodomethane	Ave	0.3530	0.3544		0.0251	0.0250	0.4	20.0
Carbon disulfide	Ave	0.4879	0.4586	0.1000	0.0235	0.0250	-6.0	20.0
3-Chloro-1-propene	Ave	0.1053	0.1063		0.0252	0.0250	1.0	20.0
Methyl acetate	Ave	0.3191	0.3016	0.1000	0.0473	0.0500	-5.5	20.0
Methylene Chloride	Lin1		0.2597	0.1000	0.0257	0.0250	2.8	50.0
tert-Butyl alcohol (TBA)	Lin1		0.0262		0.224	0.250	-10.5	50.0
Acrylonitrile	Ave	0.1291	0.1271		0.246	0.250	-1.5	20.0
Methyl tert-butyl ether	Ave	0.6904	0.6750	0.1000	0.0244	0.0250	-2.2	20.0
trans-1,2-Dichloroethene	Ave	0.2148	0.2188	0.1000	0.0255	0.0250	1.9	20.0
Hexane	Ave	0.0668	0.0576		0.0216	0.0250	-13.7	20.0
1,1-Dichloroethane	Ave	0.4284	0.4189	0.2000	0.0244	0.0250	-2.2	20.0
Vinyl acetate	Ave	0.7072	0.6745		0.0238	0.0250	-4.6	50.0
2-Butanone (MEK)	Lin1		0.2391	0.0100	0.0564	0.0500	12.9	20.0
2,2-Dichloropropane	Ave	0.1993	0.1790		0.0225	0.0250	-10.2	20.0
cis-1,2-Dichloroethene	Ave	0.2577	0.2564	0.1000	0.0249	0.0250	-0.5	20.0
Bromochloromethane	Ave	0.1320	0.1327		0.0251	0.0250	0.5	20.0
Chloroform	Ave	0.4266	0.4194	0.2000	0.0246	0.0250	-1.7	20.0
Tetrahydrofuran	Lin1		0.1318		0.0503	0.0500	0.5	20.0
1,1,1-Trichloroethane	Ave	0.3179	0.3227	0.1000	0.0254	0.0250	1.5	20.0
Cyclohexane	Ave	0.4388	0.4282	0.1000	0.0244	0.0250	-2.4	20.0
1,1-Dichloropropene	Ave	0.2936	0.2772		0.0236	0.0250	-5.6	20.0
Carbon tetrachloride	Ave	0.2775	0.2649	0.1000	0.0239	0.0250	-4.5	20.0
Isobutyl alcohol	Lin1		0.0153		0.592	0.625	-5.3	20.0
1,2-Dichloroethane	Ave	0.4455	0.4412	0.1000	0.0248	0.0250	-1.0	20.0
Benzene	Ave	0.8835	0.8670	0.5000	0.0245	0.0250	-1.9	20.0
n-Heptane	Ave	0.0696	0.0630		0.0226	0.0250	-9.6	20.0
Trichloroethene	Ave	0.2470	0.2319	0.1500	0.0235	0.0250	-6.1	20.0

FORM VII
GC/MS VOA CONTINUING CALIBRATION DATA

Lab Name: TestAmerica Canton Job No.: 240-81698-1

SDG No.:

Lab Sample ID: ICV 240-285694/19 Calibration Date: 07/02/2017 11:10

Instrument ID: A3UX8 Calib Start Date: 07/02/2017 05:21

GC Column: DB-624 ID: 0.18(mm) Calib End Date: 07/02/2017 07:53

Lab File ID: UX80999.D Conc. Units: ng/uL Heated Purge: (Y/N) Y

ANALYTE	CURVE TYPE	AVE RRF	RRF	MIN RRF	CALC AMOUNT	SPIKE AMOUNT	%D	MAX %D
1,2-Dichloropropane	Ave	0.2425	0.2520	0.1000	0.0260	0.0250	3.9	20.0
Methylcyclohexane	Ave	0.3812	0.3390	0.1000	0.0222	0.0250	-11.1	20.0
1,4-Dioxane	Ave	0.0027	0.0028		0.523	0.500	4.6	50.0
Dibromomethane	Ave	0.1473	0.1476		0.0250	0.0250	0.2	20.0
Bromodichloromethane	Ave	0.2769	0.2901	0.1500	0.0262	0.0250	4.8	20.0
2-Chloroethyl vinyl ether	Ave	0.1292	0.1370		0.0265	0.0250	6.1	20.0
cis-1,3-Dichloropropene	Lin1		0.3124	0.1500	0.0239	0.0250	-4.6	20.0
4-Methyl-2-pentanone (MIBK)	Ave	0.4038	0.4112	0.0500	0.0509	0.0500	1.8	20.0
Toluene	Ave	1.274	1.241	0.4000	0.0244	0.0250	-2.6	20.0
trans-1,3-Dichloropropene	Lin1		0.3562	0.1000	0.0216	0.0250	-13.7	20.0
Ethyl methacrylate	Ave	0.3718	0.4271		0.0287	0.0250	14.9	20.0
1,1,2-Trichloroethane	Ave	0.2897	0.2908	0.1000	0.0251	0.0250	0.4	20.0
1,3-Dichloropropane	Ave	0.4895	0.4859		0.0248	0.0250	-0.7	20.0
Tetrachloroethene	Ave	0.2581	0.2457	0.1500	0.0238	0.0250	-4.8	20.0
2-Hexanone	Ave	0.3934	0.3937	0.0500	0.0500	0.0500	0.0	20.0
Dibromochloromethane	Ave	0.2850	0.2814		0.0247	0.0250	-1.3	20.0
1,2-Dibromoethane	Ave	0.2875	0.2927		0.0254	0.0250	1.8	20.0
Chlorobenzene	Ave	0.8991	0.8696	0.3000	0.0242	0.0250	-3.3	20.0
1,1,1,2-Tetrachloroethane	Ave	0.2992	0.3148		0.0263	0.0250	5.2	20.0
Ethylbenzene	Ave	0.4451	0.4275		0.0240	0.0250	-3.9	20.0
m-Xylene & p-Xylene	Ave	0.5360	0.5205		0.0243	0.0250	-2.9	20.0
o-Xylene	Ave	0.5345	0.5337		0.0250	0.0250	-0.1	20.0
Styrene	Ave	0.9212	0.8962	0.3000	0.0243	0.0250	-2.7	20.0
Bromoform	Lin1		0.1546	0.1000	0.0220	0.0250	-12.2	20.0
Isopropylbenzene	Ave	1.358	1.341	0.1000	0.0247	0.0250	-1.3	20.0
1,1,2,2-Tetrachloroethane	Ave	0.6314	0.6504	0.3000	0.0258	0.0250	3.0	20.0
Bromobenzene	Ave	0.7068	0.7296		0.0258	0.0250	3.2	20.0
1,2,3-Trichloropropane	Lin1		0.2590		0.0276	0.0250	10.6	20.0
trans-1,4-Dichloro-2-butene	Ave	0.2483	0.2537		0.0255	0.0250	2.2	20.0
N-Propylbenzene	Ave	0.7003	0.7047		0.0252	0.0250	0.6	20.0
2-Chlorotoluene	Ave	0.6425	0.6332		0.0246	0.0250	-1.5	20.0
1,3,5-Trimethylbenzene	Ave	2.067	2.087		0.0252	0.0250	1.0	20.0
4-Chlorotoluene	Ave	0.6823	0.6475		0.0237	0.0250	-5.1	20.0
tert-Butylbenzene	Ave	1.999	1.983		0.0248	0.0250	-0.8	20.0
1,2,4-Trimethylbenzene	Ave	2.201	2.161		0.0245	0.0250	-1.8	20.0
sec-Butylbenzene	Ave	2.599	2.537		0.0244	0.0250	-2.4	20.0
1,3-Dichlorobenzene	Ave	1.340	1.261	0.6000	0.0235	0.0250	-5.9	20.0
p-Isopropyltoluene	Ave	2.357	2.294		0.0243	0.0250	-2.7	20.0
1,4-Dichlorobenzene	Ave	1.439	1.301	0.5000	0.0226	0.0250	-9.6	20.0
n-Butylbenzene	Ave	1.922	1.738		0.0226	0.0250	-9.6	20.0
1,2-Dichlorobenzene	Ave	1.345	1.273	0.4000	0.0237	0.0250	-5.4	20.0

FORM VII 8260C

FORM VII
GC/MS VOA CONTINUING CALIBRATION DATA

Lab Name: TestAmerica Canton Job No.: 240-81698-1

SDG No.:

Lab Sample ID: ICV 240-285694/19 Calibration Date: 07/02/2017 11:10

Instrument ID: A3UX8 Calib Start Date: 07/02/2017 05:21

GC Column: DB-624 ID: 0.18(mm) Calib End Date: 07/02/2017 07:53

Lab File ID: UX80999.D Conc. Units: ng/uL Heated Purge: (Y/N) Y

ANALYTE	CURVE TYPE	AVE RRF	RRF	MIN RRF	CALC AMOUNT	SPIKE AMOUNT	%D	MAX %D
1,2-Dibromo-3-Chloropropane	Ave	0.1146	0.0995	0.0500	0.0217	0.0250	-13.2	50.0
1,2,4-Trichlorobenzene	Ave	0.8624	0.6784	0.2000	0.0197	0.0250	-21.3	50.0
Hexachlorobutadiene	Ave	0.4780	0.3977		0.0208	0.0250	-16.8	20.0
Naphthalene	Ave	2.150	1.958		0.0228	0.0250	-9.0	50.0
1,2,3-Trichlorobenzene	Ave	0.8967	0.7353		0.0205	0.0250	-18.0	20.0
Dibromofluoromethane (Surr)	Ave	0.2428	0.2179		0.0449	0.0500	-10.3	20.0
1,2-Dichloroethane-d4 (Surr)	Ave	0.3556	0.3003		0.0422	0.0500	-15.6	20.0
Toluene-d8 (Surr)	Ave	1.229	1.160		0.0472	0.0500	-5.6	20.0
4-Bromofluorobenzene (Surr)	Ave	0.4941	0.4526		0.0458	0.0500	-8.4	20.0

FORM VII
GC/MS VOA CONTINUING CALIBRATION DATA

Lab Name: TestAmerica Canton Job No.: 240-81698-1

SDG No.:

Lab Sample ID: ICV 240-285694/20 Calibration Date: 07/02/2017 11:32

Instrument ID: A3UX8 Calib Start Date: 07/02/2017 05:21

GC Column: DB-624 ID: 0.18(mm) Calib End Date: 07/02/2017 07:53

Lab File ID: UX81000.D Conc. Units: ng/uL Heated Purge: (Y/N) Y

ANALYTE	CURVE TYPE	AVE RRF	RRF	MIN RRF	CALC AMOUNT	SPIKE AMOUNT	%D	MAX %D
Dibromofluoromethane (Surr)	Ave	0.2428	0.2251		0.0463	0.0500	-7.3	20.0
1,2-Dichloroethane-d4 (Surr)	Ave	0.3556	0.3262		0.0459	0.0500	-8.3	20.0
Toluene-d8 (Surr)	Ave	1.229	1.153		0.0469	0.0500	-6.2	20.0
4-Bromofluorobenzene (Surr)	Ave	0.4941	0.4651		0.0471	0.0500	-5.9	20.0

FORM VII
GC/MS VOA CONTINUING CALIBRATION DATA

Lab Name: TestAmerica Canton Job No.: 240-81698-1

SDG No.:

Lab Sample ID: ICV 240-285694/20 Calibration Date: 07/02/2017 11:32

Instrument ID: A3UX8 Calib Start Date: 07/02/2017 08:14

GC Column: DB-624 ID: 0.18(mm) Calib End Date: 07/02/2017 10:48

Lab File ID: UX81000.D Conc. Units: ng/uL Heated Purge: (Y/N) Y

ANALYTE	CURVE TYPE	AVE RRF	RRF	MIN RRF	CALC AMOUNT	SPIKE AMOUNT	%D	MAX %D
Acetonitrile	Qua		0.0445		0.249	0.250	-0.5	20.0
Diisopropyl ether	Ave	0.2086	0.2173		0.0261	0.0250	4.2	20.0
2-Chloro-1,3-butadiene	Ave	0.4480	0.4616		0.0258	0.0250	3.0	20.0
Ethyl t-butyl ether	Ave	0.8392	0.8425		0.0251	0.0250	0.4	20.0
Ethyl acetate	Qua		0.4413		0.0513	0.0500	2.7	50.0
Propionitrile	Qua		0.0491		0.249	0.250	-0.4	20.0
Methacrylonitrile	Ave	0.2797	0.2664		0.238	0.250	-4.8	20.0
Tert-amyl methyl ether	Ave	0.6207	0.6078		0.0245	0.0250	-2.1	20.0
n-Butanol	Qua		0.0075		0.578	0.625	-7.5	20.0
Ethyl acrylate	Qua		0.3771		0.0235	0.0250	-6.2	20.0
Methyl methacrylate	Qua		0.3589		0.0479	0.0500	-4.1	20.0
2-Nitropropane	Qua		0.0679		0.0485	0.0500	-3.1	20.0
n-Butyl acetate	Qua		0.5610		0.0229	0.0250	-8.4	20.0
1-Chlorohexane	Ave	0.3362	0.3168		0.0236	0.0250	-5.8	20.0
Cyclohexanone	Qua		0.0117		0.214	0.250	-14.3	20.0
Pentachloroethane	Qua		0.2054		0.0453	0.0500	-9.4	20.0
1,2,3-Trimethylbenzene	Ave	2.213	2.258		0.0255	0.0250	2.0	20.0
Benzyl chloride	Qua		0.0829		0.0220	0.0250	-12.0	20.0
1,3,5-Trichlorobenzene	Ave	0.8606	0.7950		0.0231	0.0250	-7.6	20.0
2-Methylnaphthalene	Qua		0.9548		0.0361	0.0500	-27.9*	20.0

FORM VII
GC/MS VOA CONTINUING CALIBRATION DATA

Lab Name: TestAmerica Canton Job No.: 240-81698-1

SDG No.:

Lab Sample ID: CCVIS 240-285711/4 Calibration Date: 07/03/2017 02:26

Instrument ID: A3UX8 Calib Start Date: 07/02/2017 05:21

GC Column: DB-624 ID: 0.18(mm) Calib End Date: 07/02/2017 07:53

Lab File ID: UX81007.D Conc. Units: ng/uL Heated Purge: (Y/N) Y

ANALYTE	CURVE TYPE	AVE RRF	RRF	MIN RRF	CALC AMOUNT	SPIKE AMOUNT	%D	MAX %D
Dichlorodifluoromethane	Ave	0.2036	0.2247	0.1000	0.0221	0.0200	10.3	20.0
Chloromethane	Ave	0.2933	0.3041	0.1000	0.0207	0.0200	3.7	20.0
Vinyl chloride	Ave	0.2070	0.2220	0.1000	0.0214	0.0200	7.2	20.0
Butadiene	Ave	0.2634	0.2930		0.0222	0.0200	11.2	20.0
Bromomethane	Ave	0.1033	0.1159	0.0500	0.0224	0.0200	12.2	20.0
Chloroethane	Ave	0.1260	0.1410	0.0500	0.0224	0.0200	11.9	20.0
Dichlorofluoromethane	Ave	0.3002	0.3204		0.0213	0.0200	6.7	20.0
Trichlorofluoromethane	Ave	0.2644	0.3012	0.1000	0.0228	0.0200	13.9	20.0
Ethyl ether	Ave	0.2537	0.2471		0.0195	0.0200	-2.6	20.0
Acrolein	Ave	0.0299	0.0277		0.0928	0.100	-7.2	50.0
1,1-Dichloroethene	Ave	0.1853	0.1969	0.1000	0.0212	0.0200	6.2	20.0
1,1,2-Trichloro-1,2,2-trifluoroethane	Ave	0.1529	0.1721	0.0500	0.0225	0.0200	12.5	20.0
Acetone	Lin1		0.1368	0.0100	0.0358	0.0400	-10.5	50.0
Iodomethane	Ave	0.3530	0.3789		0.0215	0.0200	7.4	20.0
Carbon disulfide	Ave	0.4879	0.5715	0.1000	0.0234	0.0200	17.1	20.0
3-Chloro-1-propene	Ave	0.1053	0.1210		0.0230	0.0200	14.9	20.0
Methyl acetate	Ave	0.3191	0.2825	0.1000	0.0354	0.0400	-11.5	20.0
Methylene Chloride	Lin1		0.2743	0.1000	0.0210	0.0200	5.0	50.0
tert-Butyl alcohol (TBA)	Lin1		0.0233		0.151	0.200	-24.7	50.0
Acrylonitrile	Ave	0.1291	0.1203		0.186	0.200	-6.8	20.0
Methyl tert-butyl ether	Ave	0.6904	0.6881	0.1000	0.0199	0.0200	-0.3	20.0
trans-1,2-Dichloroethene	Ave	0.2148	0.2308	0.1000	0.0215	0.0200	7.4	20.0
Hexane	Ave	0.0668	0.0711		0.0213	0.0200	6.5	20.0
1,1-Dichloroethane	Ave	0.4284	0.4461	0.2000	0.0208	0.0200	4.1	20.0
Vinyl acetate	Ave	0.7072	0.7237		0.0205	0.0200	2.3	50.0
2-Butanone (MEK)	Lin1		0.2236	0.0100	0.0403	0.0400	0.7	20.0
2,2-Dichloropropane	Ave	0.1993	0.2202		0.0221	0.0200	10.5	20.0
cis-1,2-Dichloroethene	Ave	0.2577	0.2704	0.1000	0.0210	0.0200	4.9	20.0
Bromochloromethane	Ave	0.1320	0.1355		0.0205	0.0200	2.6	20.0
Tetrahydrofuran	Lin1		0.1227		0.0358	0.0400	-10.5	20.0
Chloroform	Ave	0.4266	0.4347	0.2000	0.0204	0.0200	1.9	20.0
1,1,1-Trichloroethane	Ave	0.3179	0.3646	0.1000	0.0229	0.0200	14.7	20.0
Cyclohexane	Ave	0.4388	0.4842	0.1000	0.0221	0.0200	10.4	20.0
1,1-Dichloropropene	Ave	0.2936	0.3072		0.0209	0.0200	4.6	20.0
Carbon tetrachloride	Ave	0.2775	0.3171	0.1000	0.0229	0.0200	14.3	20.0
Isobutyl alcohol	Lin1		0.0134		0.390	0.500	-22.0*	20.0
1,2-Dichloroethane	Ave	0.4455	0.4491	0.1000	0.0202	0.0200	0.8	20.0
Benzene	Ave	0.8835	0.9179	0.5000	0.0208	0.0200	3.9	20.0
n-Heptane	Ave	0.0696	0.0727		0.0209	0.0200	4.4	20.0
Trichloroethene	Ave	0.2470	0.2572	0.1500	0.0208	0.0200	4.1	20.0

FORM VII
GC/MS VOA CONTINUING CALIBRATION DATA

Lab Name: TestAmerica Canton Job No.: 240-81698-1

SDG No.:

Lab Sample ID: CCVIS 240-285711/4 Calibration Date: 07/03/2017 02:26

Instrument ID: A3UX8 Calib Start Date: 07/02/2017 05:21

GC Column: DB-624 ID: 0.18(mm) Calib End Date: 07/02/2017 07:53

Lab File ID: UX81007.D Conc. Units: ng/uL Heated Purge: (Y/N) Y

ANALYTE	CURVE TYPE	AVE RRF	RRF	MIN RRF	CALC AMOUNT	SPIKE AMOUNT	%D	MAX %D
1,2-Dichloropropane	Ave	0.2425	0.2481	0.1000	0.0205	0.0200	2.3	20.0
Methylcyclohexane	Ave	0.3812	0.4100	0.1000	0.0215	0.0200	7.5	20.0
1,4-Dioxane	Ave	0.0027	0.0026		0.376	0.400	-6.0	50.0
Dibromomethane	Ave	0.1473	0.1474		0.0200	0.0200	0.0	20.0
Bromodichloromethane	Ave	0.2769	0.3058	0.1500	0.0221	0.0200	10.5	20.0
2-Chloroethyl vinyl ether	Ave	0.1292	0.1324		0.0410	0.0400	2.5	20.0
cis-1,3-Dichloropropene	Lin1		0.3170	0.1500	0.0196	0.0200	-2.2	20.0
4-Methyl-2-pentanone (MIBK)	Ave	0.4038	0.3709	0.0500	0.0367	0.0400	-8.2	20.0
Toluene	Ave	1.274	1.291	0.4000	0.0203	0.0200	1.3	20.0
trans-1,3-Dichloropropene	Lin1		0.3755	0.1000	0.0184	0.0200	-7.9	20.0
Ethyl methacrylate	Ave	0.3718	0.3807		0.0205	0.0200	2.4	20.0
1,1,2-Trichloroethane	Ave	0.2897	0.2769	0.1000	0.0191	0.0200	-4.4	20.0
1,3-Dichloropropane	Ave	0.4895	0.4711		0.0193	0.0200	-3.7	20.0
Tetrachloroethene	Ave	0.2581	0.2851	0.1500	0.0221	0.0200	10.5	20.0
2-Hexanone	Ave	0.3934	0.3455	0.0500	0.0351	0.0400	-12.2	20.0
Dibromochloromethane	Ave	0.2850	0.3024		0.0212	0.0200	6.1	20.0
1,2-Dibromoethane	Ave	0.2875	0.2892		0.0201	0.0200	0.6	20.0
Chlorobenzene	Ave	0.8991	0.9091	0.3000	0.0202	0.0200	1.1	20.0
1,1,1,2-Tetrachloroethane	Ave	0.2992	0.3251		0.0217	0.0200	8.7	20.0
Ethylbenzene	Ave	0.4451	0.4520		0.0203	0.0200	1.6	20.0
m-Xylene & p-Xylene	Ave	0.5360	0.5703		0.0213	0.0200	6.4	20.0
o-Xylene	Ave	0.5345	0.5581		0.0209	0.0200	4.4	20.0
Styrene	Ave	0.9212	0.9362	0.3000	0.0203	0.0200	1.6	20.0
Bromoform	Lin1		0.1619	0.1000	0.0188	0.0200	-5.9	20.0
Isopropylbenzene	Ave	1.358	1.445	0.1000	0.0213	0.0200	6.4	20.0
1,1,2,2-Tetrachloroethane	Ave	0.6314	0.6128	0.3000	0.0194	0.0200	-2.9	20.0
Bromobenzene	Ave	0.7068	0.7167		0.0203	0.0200	1.4	20.0
1,2,3-Trichloropropane	Lin1		0.2341		0.0193	0.0200	-3.4	20.0
trans-1,4-Dichloro-2-butene	Ave	0.2483	0.2545		0.0205	0.0200	2.5	20.0
N-Propylbenzene	Ave	0.7003	0.7513		0.0215	0.0200	7.3	20.0
2-Chlorotoluene	Ave	0.6425	0.6514		0.0203	0.0200	1.4	20.0
1,3,5-Trimethylbenzene	Ave	2.067	2.285		0.0221	0.0200	10.6	20.0
4-Chlorotoluene	Ave	0.6823	0.6895		0.0202	0.0200	1.1	20.0
tert-Butylbenzene	Ave	1.999	2.081		0.0208	0.0200	4.1	20.0
1,2,4-Trimethylbenzene	Ave	2.201	2.349		0.0213	0.0200	6.7	20.0
sec-Butylbenzene	Ave	2.599	2.791		0.0215	0.0200	7.4	20.0
1,3-Dichlorobenzene	Ave	1.340	1.381	0.6000	0.0206	0.0200	3.1	20.0
p-Isopropyltoluene	Ave	2.357	2.604		0.0221	0.0200	10.5	20.0
1,4-Dichlorobenzene	Ave	1.439	1.443	0.5000	0.0201	0.0200	0.3	20.0
n-Butylbenzene	Ave	1.922	2.098		0.0218	0.0200	9.1	20.0
1,2-Dichlorobenzene	Ave	1.345	1.365	0.4000	0.0203	0.0200	1.5	20.0

FORM VII
GC/MS VOA CONTINUING CALIBRATION DATA

Lab Name: TestAmerica Canton Job No.: 240-81698-1

SDG No.:

Lab Sample ID: CCVIS 240-285711/4 Calibration Date: 07/03/2017 02:26

Instrument ID: A3UX8 Calib Start Date: 07/02/2017 05:21

GC Column: DB-624 ID: 0.18(mm) Calib End Date: 07/02/2017 07:53

Lab File ID: UX81007.D Conc. Units: ng/uL Heated Purge: (Y/N) Y

ANALYTE	CURVE TYPE	AVE RRF	RRF	MIN RRF	CALC AMOUNT	SPIKE AMOUNT	%D	MAX %D
1,2-Dibromo-3-Chloropropane	Ave	0.1146	0.0914	0.0500	0.0160	0.0200	-20.2	50.0
1,2,4-Trichlorobenzene	Ave	0.8624	0.8150	0.2000	0.0189	0.0200	-5.5	50.0
Hexachlorobutadiene	Ave	0.4780	0.4623		0.0193	0.0200	-3.3	20.0
Naphthalene	Ave	2.150	1.816		0.0169	0.0200	-15.5	50.0
1,2,3-Trichlorobenzene	Ave	0.8967	0.7917		0.0177	0.0200	-11.7	20.0
Dibromofluoromethane (Surr)	Ave	0.2428	0.2233		0.0460	0.0500	-8.0	20.0
1,2-Dichloroethane-d4 (Surr)	Ave	0.3556	0.3068		0.0431	0.0500	-13.7	20.0
Toluene-d8 (Surr)	Ave	1.229	1.112		0.0452	0.0500	-9.5	20.0
4-Bromofluorobenzene (Surr)	Ave	0.4941	0.4329		0.0438	0.0500	-12.4	20.0

FORM VII
GC/MS VOA CONTINUING CALIBRATION DATA

Lab Name: TestAmerica Canton Job No.: 240-81698-1

SDG No.:

Lab Sample ID: CCV 240-285711/5 Calibration Date: 07/03/2017 02:47

Instrument ID: A3UX8 Calib Start Date: 07/02/2017 08:14

GC Column: DB-624 ID: 0.18(mm) Calib End Date: 07/02/2017 10:48

Lab File ID: UX81008.D Conc. Units: ng/uL Heated Purge: (Y/N) Y

ANALYTE	CURVE TYPE	AVE RRF	RRF	MIN RRF	CALC AMOUNT	SPIKE AMOUNT	%D	MAX %D
Acetonitrile	Qua		0.0397		0.183	0.200	-8.4	20.0
Diisopropyl ether	Ave	0.2086	0.2105		0.0202	0.0200	0.9	20.0
2-Chloro-1,3-butadiene	Ave	0.4480	0.5192		0.0232	0.0200	15.9	20.0
Ethyl t-butyl ether	Ave	0.8392	0.8196		0.0195	0.0200	-2.3	20.0
Ethyl acetate	Qua		0.4114		0.0380	0.0400	-4.9	50.0
Propionitrile	Qua		0.0467		0.193	0.200	-3.7	20.0
Methacrylonitrile	Ave	0.2797	0.2511		0.180	0.200	-10.2	20.0
Tert-amyl methyl ether	Ave	0.6207	0.5965		0.0192	0.0200	-3.9	20.0
n-Butanol	Qua		0.0078		0.501	0.500	0.1	20.0
Ethyl acrylate	Qua		0.3513		0.0180	0.0200	-10.2	20.0
Methyl methacrylate	Qua		0.3405		0.0374	0.0400	-6.5	20.0
2-Nitropropane	Qua		0.0683		0.0404	0.0400	1.1	20.0
n-Butyl acetate	Qua		0.5276		0.0176	0.0200	-11.9	20.0
1-Chlorohexane	Ave	0.3362	0.3742		0.0223	0.0200	11.3	20.0
Cyclohexanone	Qua		0.0127		0.191	0.200	-4.6	20.0
Pentachloroethane	Qua		0.3478		0.0589	0.0400	47.1*	20.0
1,2,3-Trimethylbenzene	Ave	2.213	2.371		0.0214	0.0200	7.1	20.0
Benzyl chloride	Qua		0.1164		0.0240	0.0200	19.8	20.0
1,3,5-Trichlorobenzene	Ave	0.8606	0.9767		0.0227	0.0200	13.5	20.0
2-Methylnaphthalene	Qua		1.092		0.0333	0.0400	-16.8	20.0

FORM I
GC/MS VOA ORGANICS ANALYSIS DATA SHEET

Lab Name: TestAmerica Canton | Job No.: 240-81698-1

SDG No.:

Client Sample ID: | Lab Sample ID: MB 240-285711/7

Matrix: Solid | Lab File ID: UX81010.D

Analysis Method: 8260C | Date Collected:

Sample wt/vol: 5(g) | Date Analyzed: 07/03/2017 03:31

Soil Aliquot Vol: | Dilution Factor: 1

Soil Extract Vol.: | GC Column: DB-624 ID: 0.18(mm)

% Moisture: | Level: (low/med) Low

Analysis Batch No.: 285711 | Units: ug/Kg

CAS NO.	COMPOUND NAME	RESULT	Q	RL	MDL
630-20-6	1,1,1,2-Tetrachloroethane	0.36	U	5.0	0.36
71-55-6	1,1,1-Trichloroethane	0.23	U	5.0	0.23
79-34-5	1,1,2,2-Tetrachloroethane	0.26	U	5.0	0.26
76-13-1	1,1,2-Trichloro-1,2,2-trifluoroethane	0.49	U	5.0	0.49
75-34-3	1,1-Dichloroethane	0.33	U	5.0	0.33
75-35-4	1,1-Dichloroethene	0.54	U	5.0	0.54
563-58-6	1,1-Dichloropropene	0.19	U	5.0	0.19
87-61-6	1,2,3-Trichlorobenzene	0.946	J	5.0	0.35
96-18-4	1,2,3-Trichloropropane	0.39	U	5.0	0.39
526-73-8	1,2,3-Trimethylbenzene	0.10	U	5.0	0.10
120-82-1	1,2,4-Trichlorobenzene	0.762	J	5.0	0.24
95-63-6	1,2,4-Trimethylbenzene	0.25	U	5.0	0.25
96-12-8	1,2-Dibromo-3-Chloropropane	0.68	U	10	0.68
95-50-1	1,2-Dichlorobenzene	0.221	J	5.0	0.22
107-06-2	1,2-Dichloroethane	0.29	U	5.0	0.29
78-87-5	1,2-Dichloropropane	0.31	U	5.0	0.31
541-73-1	1,3-Dichlorobenzene	0.29	U	5.0	0.29
142-28-9	1,3-Dichloropropane	0.23	U	5.0	0.23
106-46-7	1,4-Dichlorobenzene	0.35	U	5.0	0.35
594-20-7	2,2-Dichloropropane	0.30	U	5.0	0.30
78-93-3	2-Butanone (MEK)	1.3	U	20	1.3
110-75-8	2-Chloroethyl vinyl ether	2.8	U	50	2.8
95-49-8	2-Chlorotoluene	0.37	U	5.0	0.37
591-78-6	2-Hexanone	0.726	J	20	0.58
106-43-4	4-Chlorotoluene	0.24	U	5.0	0.24
99-87-6	p-Isopropyltoluene	0.18	U	5.0	0.18
108-10-1	4-Methyl-2-pentanone (MIBK)	0.89	U	20	0.89
67-64-1	Acetone	3.1	U	20	3.1
71-43-2	Benzene	0.32	U	5.0	0.32
108-86-1	Bromobenzene	0.27	U	5.0	0.27
75-25-2	Bromoform	0.40	U	5.0	0.40
74-83-9	Bromomethane	0.59	U	5.0	0.59
75-15-0	Carbon disulfide	0.21	U	5.0	0.21
56-23-5	Carbon tetrachloride	0.25	U	5.0	0.25
108-90-7	Chlorobenzene	0.33	U	5.0	0.33

FORM I
GC/MS VOA ORGANICS ANALYSIS DATA SHEET

Lab Name: TestAmerica Canton | Job No.: 240-81698-1

SDG No.:

Client Sample ID: | Lab Sample ID: MB 240-285711/7

Matrix: Solid | Lab File ID: UX81010.D

Analysis Method: 8260C | Date Collected:

Sample wt/vol: 5(g) | Date Analyzed: 07/03/2017 03:31

Soil Aliquot Vol: | Dilution Factor: 1

Soil Extract Vol.: | GC Column: DB-624 ID: 0.18(mm)

% Moisture: | Level: (low/med) Low

Analysis Batch No.: 285711 | Units: ug/Kg

CAS NO.	COMPOUND NAME	RESULT	Q	RL	MDL
124-48-1	Dibromochloromethane	0.30	U	5.0	0.30
75-00-3	Chloroethane	0.38	U	5.0	0.38
67-66-3	Chloroform	0.23	U	5.0	0.23
74-87-3	Chloromethane	0.38	U	5.0	0.38
156-59-2	cis-1,2-Dichloroethene	0.28	U	5.0	0.28
10061-01-5	cis-1,3-Dichloropropene	0.26	U	5.0	0.26
74-95-3	Dibromomethane	0.38	U	5.0	0.38
74-97-5	Bromochloromethane	0.36	U	5.0	0.36
75-71-8	Dichlorodifluoromethane	0.35	U	5.0	0.35
75-27-4	Bromodichloromethane	0.33	U	5.0	0.33
75-65-0	tert-Butyl alcohol (TBA)	2.4	U	200	2.4
100-41-4	Ethylbenzene	0.27	U	5.0	0.27
87-68-3	Hexachlorobutadiene	0.526	J	5.0	0.44
108-20-3	Diisopropyl ether	0.24	U	10	0.24
98-82-8	Isopropylbenzene	0.20	U	5.0	0.20
1634-04-4	Methyl tert-butyl ether	0.27	U	5.0	0.27
75-09-2	Methylene Chloride	0.24	U	5.0	0.24
179601-23-1	m-Xylene & p-Xylene	0.40	U	10	0.40
91-20-3	Naphthalene	0.844	J	5.0	0.33
104-51-8	n-Butylbenzene	0.25	U	5.0	0.25
103-65-1	N-Propylbenzene	0.28	U	5.0	0.28
95-47-6	o-Xylene	0.22	U	5.0	0.22
135-98-8	sec-Butylbenzene	0.19	U	5.0	0.19
100-42-5	Styrene	0.27	U	5.0	0.27
994-05-8	Tert-amyl methyl ether	0.21	U	5.0	0.21
637-92-3	Ethyl t-butyl ether	0.13	U	5.0	0.13
127-18-4	Tetrachloroethene	0.37	U	5.0	0.37
108-88-3	Toluene	0.34	U	5.0	0.34
156-60-5	trans-1,2-Dichloroethene	0.38	U	5.0	0.38
10061-02-6	trans-1,3-Dichloropropene	0.21	U	5.0	0.21
79-01-6	Trichloroethene	0.41	U	5.0	0.41
75-69-4	Trichlorofluoromethane	0.24	U	5.0	0.24
108-05-4	Vinyl acetate	0.87	U	10	0.87
75-01-4	Vinyl chloride	0.28	U	5.0	0.28
1330-20-7	Xylenes, Total	0.40	U	10	0.40
98-06-6	tert-Butylbenzene	0.21	U	5.0	0.21

FORM I
GC/MS VOA ORGANICS ANALYSIS DATA SHEET

Lab Name: TestAmerica Canton
Job No.: 240-81698-1
SDG No.:
Client Sample ID:
Lab Sample ID: MB 240-285711/7
Matrix: Solid
Lab File ID: UX81010.D
Analysis Method: 8260C
Date Collected:
Sample wt/vol: 5(g)
Date Analyzed: 07/03/2017 03:31
Soil Aliquot Vol:
Dilution Factor: 1
Soil Extract Vol.:
GC Column: DB-624 ID: 0.18(mm)
% Moisture:
Level: (low/med) Low
Analysis Batch No.: 285711
Units: ug/Kg

CAS NO.	COMPOUND NAME	RESULT	Q	RL	MDL
106-93-4	1,2-Dibromoethane	0.35	U	5.0	0.35

CAS NO.	SURROGATE	%REC	Q	LIMITS
2037-26-5	Toluene-d8 (Surr)	94		66-125
1868-53-7	Dibromofluoromethane (Surr)	91		43-131
460-00-4	4-Bromofluorobenzene (Surr)	89		61-132
17060-07-0	1,2-Dichloroethane-d4 (Surr)	85		61-127

FORM I
GC/MS VOA ORGANICS ANALYSIS DATA SHEET

Lab Name: TestAmerica Canton | Job No.: 240-81698-1

SDG No.:

Client Sample ID: | Lab Sample ID: MB 240-285874/6

Matrix: Water | Lab File ID: UXM4232.D

Analysis Method: 8260C | Date Collected:

Sample wt/vol: 5(mL) | Date Analyzed: 07/05/2017 08:32

Soil Aliquot Vol: | Dilution Factor: 1

Soil Extract Vol.: | GC Column: DB-624 ID: 0.18(mm)

% Moisture: | Level: (low/med) Low

Analysis Batch No.: 285874 | Units: ug/L

CAS NO.	COMPOUND NAME	RESULT	Q	RL	MDL
630-20-6	1,1,1,2-Tetrachloroethane	0.46	U	1.0	0.46
71-55-6	1,1,1-Trichloroethane	0.23	U	1.0	0.23
79-34-5	1,1,2,2-Tetrachloroethane	0.32	U	1.0	0.32
76-13-1	1,1,2-Trichloro-1,2,2-trifluoroethane	0.41	U	1.0	0.41
75-34-3	1,1-Dichloroethane	0.25	U	1.0	0.25
75-35-4	1,1-Dichloroethene	0.27	U	1.0	0.27
563-58-6	1,1-Dichloropropene	0.28	U	1.0	0.28
87-61-6	1,2,3-Trichlorobenzene	0.35	U	1.0	0.35
96-18-4	1,2,3-Trichloropropane	0.54	U	1.0	0.54
526-73-8	1,2,3-Trimethylbenzene	0.22	U	5.0	0.22
120-82-1	1,2,4-Trichlorobenzene	0.27	U	1.0	0.27
95-63-6	1,2,4-Trimethylbenzene	0.24	U	1.0	0.24
96-12-8	1,2-Dibromo-3-Chloropropane	0.47	U	2.0	0.47
95-50-1	1,2-Dichlorobenzene	0.26	U	1.0	0.26
107-06-2	1,2-Dichloroethane	0.30	U	1.0	0.30
78-87-5	1,2-Dichloropropane	0.30	U	1.0	0.30
541-73-1	1,3-Dichlorobenzene	0.32	U	1.0	0.32
142-28-9	1,3-Dichloropropane	0.29	U	1.0	0.29
106-46-7	1,4-Dichlorobenzene	0.23	U	1.0	0.23
594-20-7	2,2-Dichloropropane	0.34	U	1.0	0.34
78-93-3	2-Butanone (MEK)	1.80	J	10	1.0
110-75-8	2-Chloroethyl vinyl ether	0.65	U	10	0.65
95-49-8	2-Chlorotoluene	0.28	U	1.0	0.28
591-78-6	2-Hexanone	1.2	U	10	1.2
106-43-4	4-Chlorotoluene	0.23	U	1.0	0.23
99-87-6	p-Isopropyltoluene	0.29	U	1.0	0.29
108-10-1	4-Methyl-2-pentanone (MIBK)	0.71	U	10	0.71
67-64-1	Acetone	1.8	U	10	1.8
71-43-2	Benzene	0.28	U	1.0	0.28
108-86-1	Bromobenzene	0.31	U	1.0	0.31
75-25-2	Bromoform	0.43	U	1.0	0.43
74-83-9	Bromomethane	0.42	U	1.0	0.42
75-15-0	Carbon disulfide	0.34	U	1.0	0.34
56-23-5	Carbon tetrachloride	0.35	U	1.0	0.35
108-90-7	Chlorobenzene	0.32	U	1.0	0.32

FORM I
GC/MS VOA ORGANICS ANALYSIS DATA SHEET

Lab Name: TestAmerica Canton | Job No.: 240-81698-1

SDG No.:

Client Sample ID: | Lab Sample ID: MB 240-285874/6

Matrix: Water | Lab File ID: UXM4232.D

Analysis Method: 8260C | Date Collected:

Sample wt/vol: 5(mL) | Date Analyzed: 07/05/2017 08:32

Soil Aliquot Vol: | Dilution Factor: 1

Soil Extract Vol.: | GC Column: DB-624 ID: 0.18(mm)

% Moisture: | Level: (low/med) Low

Analysis Batch No.: 285874 | Units: ug/L

CAS NO.	COMPOUND NAME	RESULT	Q	RL	MDL
124-48-1	Dibromochloromethane	0.25	U	1.0	0.25
75-00-3	Chloroethane	0.41	U	1.0	0.41
67-66-3	Chloroform	0.31	U	1.0	0.31
74-87-3	Chloromethane	0.43	U	1.0	0.43
156-59-2	cis-1,2-Dichloroethene	0.30	U	1.0	0.30
10061-01-5	cis-1,3-Dichloropropene	0.26	U	1.0	0.26
74-95-3	Dibromomethane	0.46	U	1.0	0.46
74-97-5	Bromochloromethane	0.47	U	1.0	0.47
75-71-8	Dichlorodifluoromethane	0.50	U	1.0	0.50
75-27-4	Bromodichloromethane	0.30	U	1.0	0.30
75-65-0	tert-Butyl alcohol (TBA)	4.6	U	50	4.6
100-41-4	Ethylbenzene	0.26	U	1.0	0.26
87-68-3	Hexachlorobutadiene	0.36	U	1.0	0.36
108-20-3	Diisopropyl ether	0.44	U	10	0.44
98-82-8	Isopropylbenzene	0.21	U	1.0	0.21
1634-04-4	Methyl tert-butyl ether	0.27	U	1.0	0.27
75-09-2	Methylene Chloride	0.53	U	1.0	0.53
179601-23-1	m-Xylene & p-Xylene	0.24	U	2.0	0.24
91-20-3	Naphthalene	0.25	U	1.0	0.25
104-51-8	n-Butylbenzene	0.21	U	1.0	0.21
103-65-1	N-Propylbenzene	0.45	U	1.0	0.45
95-47-6	o-Xylene	0.28	U	1.0	0.28
135-98-8	sec-Butylbenzene	0.27	U	1.0	0.27
100-42-5	Styrene	0.23	U	1.0	0.23
994-05-8	Tert-amyl methyl ether	0.29	U	5.0	0.29
637-92-3	Ethyl t-butyl ether	0.35	U	5.0	0.35
127-18-4	Tetrachloroethene	0.30	U	1.0	0.30
108-88-3	Toluene	0.23	U	1.0	0.23
156-60-5	trans-1,2-Dichloroethene	0.29	U	1.0	0.29
10061-02-6	trans-1,3-Dichloropropene	0.31	U	1.0	0.31
79-01-6	Trichloroethene	0.33	U	1.0	0.33
75-69-4	Trichlorofluoromethane	0.50	U	1.0	0.50
108-05-4	Vinyl acetate	0.28	U	2.0	0.28
75-01-4	Vinyl chloride	0.45	U	1.0	0.45
1330-20-7	Xylenes, Total	0.24	U	2.0	0.24
98-06-6	tert-Butylbenzene	0.26	U	1.0	0.26

FORM I
GC/MS VOA ORGANICS ANALYSIS DATA SHEET

Lab Name: TestAmerica Canton
Job No.: 240-81698-1
SDG No.:
Client Sample ID:
Lab Sample ID: MB 240-285874/6
Matrix: Water
Lab File ID: UXM4232.D
Analysis Method: 8260C
Date Collected:
Sample wt/vol: 5(mL)
Date Analyzed: 07/05/2017 08:32
Soil Aliquot Vol:
Dilution Factor: 1
Soil Extract Vol.:
GC Column: DB-624 ID: 0.18(mm)
% Moisture:
Level: (low/med) Low
Analysis Batch No.: 285874
Units: ug/L

CAS NO.	COMPOUND NAME	RESULT	Q	RL	MDL
106-93-4	1,2-Dibromoethane	0.23	U	1.0	0.23

CAS NO.	SURROGATE	%REC	Q	LIMITS
2037-26-5	Toluene-d8 (Surr)	108		73-120
1868-53-7	Dibromofluoromethane (Surr)	91		69-124
460-00-4	4-Bromofluorobenzene (Surr)	95		69-120
17060-07-0	1,2-Dichloroethane-d4 (Surr)	90		61-138

FORM I
GC/MS VOA ORGANICS ANALYSIS DATA SHEET

Lab Name: TestAmerica Canton | Job No.: 240-81698-1

SDG No.:

Client Sample ID: | Lab Sample ID: MB 240-286045/6

Matrix: Water | Lab File ID: UXM4287.D

Analysis Method: 8260C | Date Collected:

Sample wt/vol: 5(mL) | Date Analyzed: 07/06/2017 09:38

Soil Aliquot Vol: | Dilution Factor: 1

Soil Extract Vol.: | GC Column: DB-624 ID: 0.18(mm)

% Moisture: | Level: (low/med) Low

Analysis Batch No.: 286045 | Units: ug/L

CAS NO.	COMPOUND NAME	RESULT	Q	RL	MDL
630-20-6	1,1,1,2-Tetrachloroethane	0.46	U	1.0	0.46
71-55-6	1,1,1-Trichloroethane	0.23	U	1.0	0.23
79-34-5	1,1,2,2-Tetrachloroethane	0.32	U	1.0	0.32
76-13-1	1,1,2-Trichloro-1,2,2-trifluoroethane	0.41	U	1.0	0.41
75-34-3	1,1-Dichloroethane	0.25	U	1.0	0.25
75-35-4	1,1-Dichloroethene	0.27	U	1.0	0.27
563-58-6	1,1-Dichloropropene	0.28	U	1.0	0.28
87-61-6	1,2,3-Trichlorobenzene	0.35	U	1.0	0.35
96-18-4	1,2,3-Trichloropropane	0.54	U	1.0	0.54
526-73-8	1,2,3-Trimethylbenzene	0.22	U	5.0	0.22
120-82-1	1,2,4-Trichlorobenzene	0.27	U	1.0	0.27
95-63-6	1,2,4-Trimethylbenzene	0.24	U	1.0	0.24
96-12-8	1,2-Dibromo-3-Chloropropane	0.47	U	2.0	0.47
95-50-1	1,2-Dichlorobenzene	0.26	U	1.0	0.26
107-06-2	1,2-Dichloroethane	0.30	U	1.0	0.30
78-87-5	1,2-Dichloropropane	0.30	U	1.0	0.30
541-73-1	1,3-Dichlorobenzene	0.32	U	1.0	0.32
142-28-9	1,3-Dichloropropane	0.29	U	1.0	0.29
106-46-7	1,4-Dichlorobenzene	0.23	U	1.0	0.23
594-20-7	2,2-Dichloropropane	0.34	U	1.0	0.34
78-93-3	2-Butanone (MEK)	1.0	U	10	1.0
110-75-8	2-Chloroethyl vinyl ether	0.65	U	10	0.65
95-49-8	2-Chlorotoluene	0.28	U	1.0	0.28
591-78-6	2-Hexanone	1.2	U	10	1.2
106-43-4	4-Chlorotoluene	0.23	U	1.0	0.23
99-87-6	p-Isopropyltoluene	0.29	U	1.0	0.29
108-10-1	4-Methyl-2-pentanone (MIBK)	0.71	U	10	0.71
67-64-1	Acetone	1.8	U	10	1.8
71-43-2	Benzene	0.28	U	1.0	0.28
108-86-1	Bromobenzene	0.31	U	1.0	0.31
75-25-2	Bromoform	0.43	U	1.0	0.43
74-83-9	Bromomethane	0.42	U	1.0	0.42
75-15-0	Carbon disulfide	0.34	U	1.0	0.34
56-23-5	Carbon tetrachloride	0.35	U	1.0	0.35
108-90-7	Chlorobenzene	0.32	U	1.0	0.32

FORM I
GC/MS VOA ORGANICS ANALYSIS DATA SHEET

Lab Name: TestAmerica Canton | Job No.: 240-81698-1

SDG No.:

Client Sample ID: | Lab Sample ID: MB 240-286045/6

Matrix: Water | Lab File ID: UXM4287.D

Analysis Method: 8260C | Date Collected:

Sample wt/vol: 5(mL) | Date Analyzed: 07/06/2017 09:38

Soil Aliquot Vol: | Dilution Factor: 1

Soil Extract Vol.: | GC Column: DB-624 ID: 0.18(mm)

% Moisture: | Level: (low/med) Low

Analysis Batch No.: 286045 | Units: ug/L

CAS NO.	COMPOUND NAME	RESULT	Q	RL	MDL
124-48-1	Dibromochloromethane	0.25	U	1.0	0.25
75-00-3	Chloroethane	0.41	U	1.0	0.41
67-66-3	Chloroform	0.31	U	1.0	0.31
74-87-3	Chloromethane	0.43	U	1.0	0.43
156-59-2	cis-1,2-Dichloroethene	0.30	U	1.0	0.30
10061-01-5	cis-1,3-Dichloropropene	0.26	U	1.0	0.26
74-95-3	Dibromomethane	0.46	U	1.0	0.46
74-97-5	Bromochloromethane	0.47	U	1.0	0.47
75-71-8	Dichlorodifluoromethane	0.50	U	1.0	0.50
75-27-4	Bromodichloromethane	0.30	U	1.0	0.30
75-65-0	tert-Butyl alcohol (TBA)	4.6	U	50	4.6
100-41-4	Ethylbenzene	0.26	U	1.0	0.26
87-68-3	Hexachlorobutadiene	0.36	U	1.0	0.36
108-20-3	Diisopropyl ether	0.44	U	10	0.44
98-82-8	Isopropylbenzene	0.21	U	1.0	0.21
1634-04-4	Methyl tert-butyl ether	0.27	U	1.0	0.27
75-09-2	Methylene Chloride	0.53	U	1.0	0.53
179601-23-1	m-Xylene & p-Xylene	0.24	U	2.0	0.24
91-20-3	Naphthalene	0.25	U	1.0	0.25
104-51-8	n-Butylbenzene	0.21	U	1.0	0.21
103-65-1	N-Propylbenzene	0.45	U	1.0	0.45
95-47-6	o-Xylene	0.28	U	1.0	0.28
135-98-8	sec-Butylbenzene	0.27	U	1.0	0.27
100-42-5	Styrene	0.23	U	1.0	0.23
994-05-8	Tert-amyl methyl ether	0.29	U	5.0	0.29
637-92-3	Ethyl t-butyl ether	0.35	U	5.0	0.35
127-18-4	Tetrachloroethene	0.30	U	1.0	0.30
108-88-3	Toluene	0.23	U	1.0	0.23
156-60-5	trans-1,2-Dichloroethene	0.29	U	1.0	0.29
10061-02-6	trans-1,3-Dichloropropene	0.31	U	1.0	0.31
79-01-6	Trichloroethene	0.33	U	1.0	0.33
75-69-4	Trichlorofluoromethane	0.50	U	1.0	0.50
108-05-4	Vinyl acetate	0.28	U	2.0	0.28
75-01-4	Vinyl chloride	0.45	U	1.0	0.45
1330-20-7	Xylenes, Total	0.24	U	2.0	0.24
98-06-6	tert-Butylbenzene	0.26	U	1.0	0.26

FORM I
GC/MS VOA ORGANICS ANALYSIS DATA SHEET

Lab Name: TestAmerica Canton
Job No.: 240-81698-1
SDG No.:
Client Sample ID:
Lab Sample ID: MB 240-286045/6
Matrix: Water
Lab File ID: UXM4287.D
Analysis Method: 8260C
Date Collected:
Sample wt/vol: 5(mL)
Date Analyzed: 07/06/2017 09:38
Soil Aliquot Vol:
Dilution Factor: 1
Soil Extract Vol.:
GC Column: DB-624 ID: 0.18(mm)
% Moisture:
Level: (low/med) Low
Analysis Batch No.: 286045
Units: ug/L

CAS NO.	COMPOUND NAME	RESULT	Q	RL	MDL
106-93-4	1,2-Dibromoethane	0.23	U	1.0	0.23

CAS NO.	SURROGATE	%REC	Q	LIMITS
2037-26-5	Toluene-d8 (Surr)	103		73-120
1868-53-7	Dibromofluoromethane (Surr)	85		69-124
460-00-4	4-Bromofluorobenzene (Surr)	90		69-120
17060-07-0	1,2-Dichloroethane-d4 (Surr)	86		61-138

FORM I
GC/MS VOA ORGANICS ANALYSIS DATA SHEET

Lab Name: TestAmerica Canton | Job No.: 240-81698-1

SDG No.:

Client Sample ID: | Lab Sample ID: LCS 240-285711/6

Matrix: Solid | Lab File ID: UX81009.D

Analysis Method: 8260C | Date Collected:

Sample wt/vol: 5(g) | Date Analyzed: 07/03/2017 03:10

Soil Aliquot Vol: | Dilution Factor: 1

Soil Extract Vol.: | GC Column: DB-624 ID: 0.18(mm)

% Moisture: | Level: (low/med) Low

Analysis Batch No.: 285711 | Units: ug/Kg

CAS NO.	COMPOUND NAME	RESULT	Q	RL	MDL
630-20-6	1,1,1,2-Tetrachloroethane	54.6		5.0	0.36
71-55-6	1,1,1-Trichloroethane	58.1		5.0	0.23
79-34-5	1,1,2,2-Tetrachloroethane	51.1		5.0	0.26
76-13-1	1,1,2-Trichloro-1,2,2-trifluoroethane	56.2		5.0	0.49
75-34-3	1,1-Dichloroethane	51.7		5.0	0.33
75-35-4	1,1-Dichloroethene	54.7		5.0	0.54
563-58-6	1,1-Dichloropropene	53.4		5.0	0.19
87-61-6	1,2,3-Trichlorobenzene	45.8		5.0	0.35
96-18-4	1,2,3-Trichloropropane	53.3		5.0	0.39
120-82-1	1,2,4-Trichlorobenzene	48.4		5.0	0.24
95-63-6	1,2,4-Trimethylbenzene	53.1		5.0	0.25
96-12-8	1,2-Dibromo-3-Chloropropane	50.9		10	0.68
95-50-1	1,2-Dichlorobenzene	48.5		5.0	0.22
107-06-2	1,2-Dichloroethane	48.3		5.0	0.29
78-87-5	1,2-Dichloropropane	50.3		5.0	0.31
541-73-1	1,3-Dichlorobenzene	49.8		5.0	0.29
142-28-9	1,3-Dichloropropane	48.6		5.0	0.23
106-46-7	1,4-Dichlorobenzene	47.0		5.0	0.35
594-20-7	2,2-Dichloropropane	58.9		5.0	0.30
78-93-3	2-Butanone (MEK)	99.9		20	1.3
110-75-8	2-Chloroethyl vinyl ether	50.8		50	2.8
95-49-8	2-Chlorotoluene	50.4		5.0	0.37
591-78-6	2-Hexanone	96.7		20	0.58
106-43-4	4-Chlorotoluene	49.2		5.0	0.24
99-87-6	p-Isopropyltoluene	56.2		5.0	0.18
108-10-1	4-Methyl-2-pentanone (MIBK)	99.6		20	0.89
67-64-1	Acetone	106		20	3.1
71-43-2	Benzene	50.2		5.0	0.32
108-86-1	Bromobenzene	48.4		5.0	0.27
75-25-2	Bromoform	48.5		5.0	0.40
74-83-9	Bromomethane	54.7		5.0	0.59
75-15-0	Carbon disulfide	59.6		5.0	0.21
56-23-5	Carbon tetrachloride	58.5		5.0	0.25
108-90-7	Chlorobenzene	49.5		5.0	0.33
124-48-1	Dibromochloromethane	53.7		5.0	0.30

FORM I
GC/MS VOA ORGANICS ANALYSIS DATA SHEET

Lab Name: TestAmerica Canton | Job No.: 240-81698-1
SDG No.:
Client Sample ID: | Lab Sample ID: LCS 240-285711/6
Matrix: Solid | Lab File ID: UX81009.D
Analysis Method: 8260C | Date Collected:
Sample wt/vol: 5(g) | Date Analyzed: 07/03/2017 03:10
Soil Aliquot Vol: | Dilution Factor: 1
Soil Extract Vol.: | GC Column: DB-624 ID: 0.18(mm)
% Moisture: | Level: (low/med) Low
Analysis Batch No.: 285711 | Units: ug/Kg

CAS NO.	COMPOUND NAME	RESULT	Q	RL	MDL
75-00-3	Chloroethane	54.4		5.0	0.38
67-66-3	Chloroform	50.1		5.0	0.23
74-87-3	Chloromethane	54.0		5.0	0.38
156-59-2	cis-1,2-Dichloroethene	50.5		5.0	0.28
10061-01-5	cis-1,3-Dichloropropene	50.3		5.0	0.26
74-95-3	Dibromomethane	50.1		5.0	0.38
74-97-5	Bromochloromethane	49.9		5.0	0.36
75-71-8	Dichlorodifluoromethane	56.0		5.0	0.35
75-27-4	Bromodichloromethane	55.0		5.0	0.33
75-65-0	tert-Butyl alcohol (TBA)	471		200	2.4
100-41-4	Ethylbenzene	51.6		5.0	0.27
87-68-3	Hexachlorobutadiene	49.3		5.0	0.44
98-82-8	Isopropylbenzene	54.5		5.0	0.20
1634-04-4	Methyl tert-butyl ether	49.9		5.0	0.27
75-09-2	Methylene Chloride	50.9		5.0	0.24
179601-23-1	m-Xylene & p-Xylene	52.1		10	0.40
91-20-3	Naphthalene	48.9		5.0	0.33
104-51-8	n-Butylbenzene	55.7		5.0	0.25
103-65-1	N-Propylbenzene	54.7		5.0	0.28
95-47-6	o-Xylene	51.6		5.0	0.22
135-98-8	sec-Butylbenzene	54.7		5.0	0.19
100-42-5	Styrene	49.6		5.0	0.27
127-18-4	Tetrachloroethene	54.1		5.0	0.37
108-88-3	Toluene	51.1		5.0	0.34
156-60-5	trans-1,2-Dichloroethene	55.8		5.0	0.38
10061-02-6	trans-1,3-Dichloropropene	46.7		5.0	0.21
79-01-6	Trichloroethene	52.3		5.0	0.41
75-69-4	Trichlorofluoromethane	58.1		5.0	0.24
108-05-4	Vinyl acetate	52.4		10	0.87
75-01-4	Vinyl chloride	53.7		5.0	0.28
1330-20-7	Xylenes, Total	104		10	0.40
98-06-6	tert-Butylbenzene	53.9		5.0	0.21
106-93-4	1,2-Dibromoethane	50.5		5.0	0.35

FORM I
GC/MS VOA ORGANICS ANALYSIS DATA SHEET

Lab Name: TestAmerica Canton | Job No.: 240-81698-1

SDG No.:

Client Sample ID: | Lab Sample ID: LCS 240-285711/6

Matrix: Solid | Lab File ID: UX81009.D

Analysis Method: 8260C | Date Collected:

Sample wt/vol: 5(g) | Date Analyzed: 07/03/2017 03:10

Soil Aliquot Vol: | Dilution Factor: 1

Soil Extract Vol.: | GC Column: DB-624 ID: 0.18(mm)

% Moisture: | Level: (low/med) Low

Analysis Batch No.: 285711 | Units: ug/Kg

CAS NO.	SURROGATE	%REC	Q	LIMITS
2037-26-5	Toluene-d8 (Surr)	95		66-125
1868-53-7	Dibromofluoromethane (Surr)	94		43-131
460-00-4	4-Bromofluorobenzene (Surr)	89		61-132
17060-07-0	1,2-Dichloroethane-d4 (Surr)	86		61-127

FORM I
GC/MS VOA ORGANICS ANALYSIS DATA SHEET

Lab Name: TestAmerica Canton | Job No.: 240-81698-1

SDG No.:

Client Sample ID: | Lab Sample ID: LCS 240-285711/8

Matrix: Solid | Lab File ID: UX81011.D

Analysis Method: 8260C | Date Collected:

Sample wt/vol: 5(g) | Date Analyzed: 07/03/2017 03:53

Soil Aliquot Vol: | Dilution Factor: 1

Soil Extract Vol.: | GC Column: DB-624 ID: 0.18(mm)

% Moisture: | Level: (low/med) Low

Analysis Batch No.: 285711 | Units: ug/Kg

CAS NO.	COMPOUND NAME	RESULT	Q	RL	MDL
526-73-8	1,2,3-Trimethylbenzene	55.5		5.0	0.10
108-20-3	Diisopropyl ether	52.0		10	0.24
994-05-8	Tert-amyl methyl ether	48.8		5.0	0.21
637-92-3	Ethyl t-butyl ether	49.9		5.0	0.13

CAS NO.	SURROGATE	%REC	Q	LIMITS
2037-26-5	Toluene-d8 (Surr)	91		66-125
1868-53-7	Dibromofluoromethane (Surr)	90		43-131
460-00-4	4-Bromofluorobenzene (Surr)	89		61-132
17060-07-0	1,2-Dichloroethane-d4 (Surr)	86		61-127

FORM I
GC/MS VOA ORGANICS ANALYSIS DATA SHEET

Lab Name: TestAmerica Canton | Job No.: 240-81698-1
SDG No.:
Client Sample ID: | Lab Sample ID: LCS 240-285874/3
Matrix: Water | Lab File ID: UXM4229.D
Analysis Method: 8260C | Date Collected:
Sample wt/vol: 5(mL) | Date Analyzed: 07/05/2017 07:20
Soil Aliquot Vol: | Dilution Factor: 1
Soil Extract Vol.: | GC Column: DB-624 ID: 0.18(mm)
% Moisture: | Level: (low/med) Low
Analysis Batch No.: 285874 | Units: ug/L

CAS NO.	COMPOUND NAME	RESULT	Q	RL	MDL
630-20-6	1,1,1,2-Tetrachloroethane	18.7		1.0	0.46
71-55-6	1,1,1-Trichloroethane	17.1		1.0	0.23
79-34-5	1,1,2,2-Tetrachloroethane	22.7		1.0	0.32
76-13-1	1,1,2-Trichloro-1,2,2-trifluoroethane	18.9		1.0	0.41
75-34-3	1,1-Dichloroethane	18.4		1.0	0.25
75-35-4	1,1-Dichloroethene	17.3		1.0	0.27
563-58-6	1,1-Dichloropropene	19.4		1.0	0.28
87-61-6	1,2,3-Trichlorobenzene	20.6		1.0	0.35
96-18-4	1,2,3-Trichloropropane	23.3		1.0	0.54
120-82-1	1,2,4-Trichlorobenzene	19.4		1.0	0.27
95-63-6	1,2,4-Trimethylbenzene	20.5		1.0	0.24
96-12-8	1,2-Dibromo-3-Chloropropane	19.7		2.0	0.47
95-50-1	1,2-Dichlorobenzene	20.3		1.0	0.26
107-06-2	1,2-Dichloroethane	17.9		1.0	0.30
78-87-5	1,2-Dichloropropane	20.3		1.0	0.30
541-73-1	1,3-Dichlorobenzene	19.8		1.0	0.32
142-28-9	1,3-Dichloropropane	22.1		1.0	0.29
106-46-7	1,4-Dichlorobenzene	19.8		1.0	0.23
594-20-7	2,2-Dichloropropane	18.1		1.0	0.34
78-93-3	2-Butanone (MEK)	38.5		10	1.0
110-75-8	2-Chloroethyl vinyl ether	16.9		10	0.65
95-49-8	2-Chlorotoluene	21.5		1.0	0.28
591-78-6	2-Hexanone	42.1		10	1.2
106-43-4	4-Chlorotoluene	22.0		1.0	0.23
99-87-6	p-Isopropyltoluene	20.3		1.0	0.29
108-10-1	4-Methyl-2-pentanone (MIBK)	38.5		10	0.71
67-64-1	Acetone	27.7		10	1.8
71-43-2	Benzene	18.9		1.0	0.28
108-86-1	Bromobenzene	20.7		1.0	0.31
75-25-2	Bromoform	17.9		1.0	0.43
74-83-9	Bromomethane	16.4		1.0	0.42
75-15-0	Carbon disulfide	17.8		1.0	0.34
56-23-5	Carbon tetrachloride	16.6		1.0	0.35
108-90-7	Chlorobenzene	20.0		1.0	0.32
124-48-1	Dibromochloromethane	19.4		1.0	0.25

FORM I
GC/MS VOA ORGANICS ANALYSIS DATA SHEET

Lab Name: TestAmerica Canton | Job No.: 240-81698-1
SDG No.:
Client Sample ID: | Lab Sample ID: LCS 240-285874/3
Matrix: Water | Lab File ID: UXM4229.D
Analysis Method: 8260C | Date Collected:
Sample wt/vol: 5(mL) | Date Analyzed: 07/05/2017 07:20
Soil Aliquot Vol: | Dilution Factor: 1
Soil Extract Vol.: | GC Column: DB-624 ID: 0.18(mm)
% Moisture: | Level: (low/med) Low
Analysis Batch No.: 285874 | Units: ug/L

CAS NO.	COMPOUND NAME	RESULT	Q	RL	MDL
75-00-3	Chloroethane	19.0		1.0	0.41
67-66-3	Chloroform	17.2		1.0	0.31
74-87-3	Chloromethane	16.3		1.0	0.43
156-59-2	cis-1,2-Dichloroethene	17.4		1.0	0.30
10061-01-5	cis-1,3-Dichloropropene	18.9		1.0	0.26
74-95-3	Dibromomethane	17.3		1.0	0.46
74-97-5	Bromochloromethane	18.0		1.0	0.47
75-71-8	Dichlorodifluoromethane	14.8		1.0	0.50
75-27-4	Bromodichloromethane	17.6		1.0	0.30
75-65-0	tert-Butyl alcohol (TBA)	189		50	4.6
100-41-4	Ethylbenzene	20.3		1.0	0.26
87-68-3	Hexachlorobutadiene	18.0		1.0	0.36
98-82-8	Isopropylbenzene	19.0		1.0	0.21
1634-04-4	Methyl tert-butyl ether	17.5		1.0	0.27
75-09-2	Methylene Chloride	17.0		1.0	0.53
179601-23-1	m-Xylene & p-Xylene	19.7		2.0	0.24
91-20-3	Naphthalene	20.6		1.0	0.25
104-51-8	n-Butylbenzene	20.2		1.0	0.21
103-65-1	N-Propylbenzene	21.9		1.0	0.45
95-47-6	o-Xylene	19.4		1.0	0.28
135-98-8	sec-Butylbenzene	20.4		1.0	0.27
100-42-5	Styrene	19.7		1.0	0.23
127-18-4	Tetrachloroethene	20.3		1.0	0.30
108-88-3	Toluene	21.1		1.0	0.23
156-60-5	trans-1,2-Dichloroethene	18.2		1.0	0.29
10061-02-6	trans-1,3-Dichloropropene	20.0		1.0	0.31
79-01-6	Trichloroethene	17.7		1.0	0.33
75-69-4	Trichlorofluoromethane	15.0		1.0	0.50
108-05-4	Vinyl acetate	22.1		2.0	0.28
75-01-4	Vinyl chloride	17.2		1.0	0.45
1330-20-7	Xylenes, Total	39.1		2.0	0.24
98-06-6	tert-Butylbenzene	20.2		1.0	0.26
106-93-4	1,2-Dibromoethane	20.8		1.0	0.23

FORM I
GC/MS VOA ORGANICS ANALYSIS DATA SHEET

Lab Name: TestAmerica Canton | Job No.: 240-81698-1

SDG No.:

Client Sample ID: | Lab Sample ID: LCS 240-285874/3

Matrix: Water | Lab File ID: UXM4229.D

Analysis Method: 8260C | Date Collected:

Sample wt/vol: 5(mL) | Date Analyzed: 07/05/2017 07:20

Soil Aliquot Vol: | Dilution Factor: 1

Soil Extract Vol.: | GC Column: DB-624 ID: 0.18(mm)

% Moisture: | Level: (low/med) Low

Analysis Batch No.: 285874 | Units: ug/L

CAS NO.	SURROGATE	%REC	Q	LIMITS
2037-26-5	Toluene-d8 (Surr)	106		73-120
1868-53-7	Dibromofluoromethane (Surr)	88		69-124
460-00-4	4-Bromofluorobenzene (Surr)	96		69-120
17060-07-0	1,2-Dichloroethane-d4 (Surr)	88		61-138

FORM I
GC/MS VOA ORGANICS ANALYSIS DATA SHEET

Lab Name: TestAmerica Canton | Job No.: 240-81698-1

SDG No.:

Client Sample ID: | Lab Sample ID: LCS 240-286045/3

Matrix: Water | Lab File ID: UXM4284.D

Analysis Method: 8260C | Date Collected:

Sample wt/vol: 5(mL) | Date Analyzed: 07/06/2017 08:29

Soil Aliquot Vol: | Dilution Factor: 1

Soil Extract Vol.: | GC Column: DB-624 ID: 0.18(mm)

% Moisture: | Level: (low/med) Low

Analysis Batch No.: 286045 | Units: ug/L

CAS NO.	COMPOUND NAME	RESULT	Q	RL	MDL
630-20-6	1,1,1,2-Tetrachloroethane	18.8		1.0	0.46
71-55-6	1,1,1-Trichloroethane	17.4		1.0	0.23
79-34-5	1,1,2,2-Tetrachloroethane	21.8		1.0	0.32
76-13-1	1,1,2-Trichloro-1,2,2-trifluoroethane	19.2		1.0	0.41
75-34-3	1,1-Dichloroethane	18.6		1.0	0.25
75-35-4	1,1-Dichloroethene	17.2		1.0	0.27
563-58-6	1,1-Dichloropropene	19.6		1.0	0.28
87-61-6	1,2,3-Trichlorobenzene	19.8		1.0	0.35
96-18-4	1,2,3-Trichloropropane	22.0		1.0	0.54
120-82-1	1,2,4-Trichlorobenzene	18.6		1.0	0.27
95-63-6	1,2,4-Trimethylbenzene	20.3		1.0	0.24
96-12-8	1,2-Dibromo-3-Chloropropane	18.7		2.0	0.47
95-50-1	1,2-Dichlorobenzene	20.1		1.0	0.26
107-06-2	1,2-Dichloroethane	17.2		1.0	0.30
78-87-5	1,2-Dichloropropane	19.9		1.0	0.30
541-73-1	1,3-Dichlorobenzene	19.8		1.0	0.32
142-28-9	1,3-Dichloropropane	21.6		1.0	0.29
106-46-7	1,4-Dichlorobenzene	19.6		1.0	0.23
594-20-7	2,2-Dichloropropane	18.8		1.0	0.34
78-93-3	2-Butanone (MEK)	35.8		10	1.0
110-75-8	2-Chloroethyl vinyl ether	18.7		10	0.65
95-49-8	2-Chlorotoluene	21.0		1.0	0.28
591-78-6	2-Hexanone	39.1		10	1.2
106-43-4	4-Chlorotoluene	21.6		1.0	0.23
99-87-6	p-Isopropyltoluene	20.2		1.0	0.29
108-10-1	4-Methyl-2-pentanone (MIBK)	37.1		10	0.71
67-64-1	Acetone	26.7		10	1.8
71-43-2	Benzene	18.8		1.0	0.28
108-86-1	Bromobenzene	20.6		1.0	0.31
75-25-2	Bromoform	17.7		1.0	0.43
74-83-9	Bromomethane	16.3		1.0	0.42
75-15-0	Carbon disulfide	18.1		1.0	0.34
56-23-5	Carbon tetrachloride	16.6		1.0	0.35
108-90-7	Chlorobenzene	20.2		1.0	0.32
124-48-1	Dibromochloromethane	19.4		1.0	0.25

FORM I
GC/MS VOA ORGANICS ANALYSIS DATA SHEET

Lab Name: TestAmerica Canton | Job No.: 240-81698-1

SDG No.:

Client Sample ID: | Lab Sample ID: LCS 240-286045/3

Matrix: Water | Lab File ID: UXM4284.D

Analysis Method: 8260C | Date Collected:

Sample wt/vol: 5(mL) | Date Analyzed: 07/06/2017 08:29

Soil Aliquot Vol: | Dilution Factor: 1

Soil Extract Vol.: | GC Column: DB-624 ID: 0.18(mm)

% Moisture: | Level: (low/med) Low

Analysis Batch No.: 286045 | Units: ug/L

CAS NO.	COMPOUND NAME	RESULT	Q	RL	MDL
75-00-3	Chloroethane	18.4		1.0	0.41
67-66-3	Chloroform	17.1		1.0	0.31
74-87-3	Chloromethane	15.7		1.0	0.43
156-59-2	cis-1,2-Dichloroethene	17.4		1.0	0.30
10061-01-5	cis-1,3-Dichloropropene	18.5		1.0	0.26
74-95-3	Dibromomethane	16.9		1.0	0.46
74-97-5	Bromochloromethane	18.0		1.0	0.47
75-71-8	Dichlorodifluoromethane	16.7		1.0	0.50
75-27-4	Bromodichloromethane	17.6		1.0	0.30
75-65-0	tert-Butyl alcohol (TBA)	173		50	4.6
100-41-4	Ethylbenzene	20.4		1.0	0.26
87-68-3	Hexachlorobutadiene	18.3		1.0	0.36
98-82-8	Isopropylbenzene	19.1		1.0	0.21
1634-04-4	Methyl tert-butyl ether	17.0		1.0	0.27
75-09-2	Methylene Chloride	16.7		1.0	0.53
179601-23-1	m-Xylene & p-Xylene	20.0		2.0	0.24
91-20-3	Naphthalene	19.8		1.0	0.25
104-51-8	n-Butylbenzene	20.5		1.0	0.21
103-65-1	N-Propylbenzene	21.8		1.0	0.45
95-47-6	o-Xylene	19.3		1.0	0.28
135-98-8	sec-Butylbenzene	20.6		1.0	0.27
100-42-5	Styrene	19.6		1.0	0.23
127-18-4	Tetrachloroethene	20.4		1.0	0.30
108-88-3	Toluene	21.1		1.0	0.23
156-60-5	trans-1,2-Dichloroethene	18.5		1.0	0.29
10061-02-6	trans-1,3-Dichloropropene	19.5		1.0	0.31
79-01-6	Trichloroethene	17.5		1.0	0.33
75-69-4	Trichlorofluoromethane	16.1		1.0	0.50
108-05-4	Vinyl acetate	20.8		2.0	0.28
75-01-4	Vinyl chloride	17.4		1.0	0.45
1330-20-7	Xylenes, Total	39.3		2.0	0.24
98-06-6	tert-Butylbenzene	20.2		1.0	0.26
106-93-4	1,2-Dibromoethane	20.3		1.0	0.23

FORM I
GC/MS VOA ORGANICS ANALYSIS DATA SHEET

Lab Name: TestAmerica Canton | Job No.: 240-81698-1

SDG No.:

Client Sample ID: | Lab Sample ID: LCS 240-286045/3

Matrix: Water | Lab File ID: UXM4284.D

Analysis Method: 8260C | Date Collected:

Sample wt/vol: 5(mL) | Date Analyzed: 07/06/2017 08:29

Soil Aliquot Vol: | Dilution Factor: 1

Soil Extract Vol.: | GC Column: DB-624 ID: 0.18(mm)

% Moisture: | Level: (low/med) Low

Analysis Batch No.: 286045 | Units: ug/L

CAS NO.	SURROGATE	%REC	Q	LIMITS
2037-26-5	Toluene-d8 (Surr)	106		73-120
1868-53-7	Dibromofluoromethane (Surr)	83		69-124
460-00-4	4-Bromofluorobenzene (Surr)	95		69-120
17060-07-0	1,2-Dichloroethane-d4 (Surr)	85		61-138

FORM I
GC/MS VOA ORGANICS ANALYSIS DATA SHEET

Lab Name: TestAmerica Canton | Job No.: 240-81698-1

SDG No.:

Client Sample ID: WC-FDCON-062817 MS | Lab Sample ID: 240-81698-4 MS

Matrix: Water | Lab File ID: UXM4254.D

Analysis Method: 8260C | Date Collected: 06/28/2017 08:55

Sample wt/vol: 5(mL) | Date Analyzed: 07/05/2017 17:05

Soil Aliquot Vol: | Dilution Factor: 6.25

Soil Extract Vol.: | GC Column: DB-624 ID: 0.18(mm)

% Moisture: | Level: (low/med) Low

Analysis Batch No.: 285874 | Units: ug/L

CAS NO.	COMPOUND NAME	RESULT	Q	RL	MDL
630-20-6	1,1,1,2-Tetrachloroethane	116		6.3	2.9
71-55-6	1,1,1-Trichloroethane	106		6.3	1.4
79-34-5	1,1,2,2-Tetrachloroethane	141		6.3	2.0
76-13-1	1,1,2-Trichloro-1,2,2-trifluoroethane	111		6.3	2.6
75-34-3	1,1-Dichloroethane	114		6.3	1.6
75-35-4	1,1-Dichloroethene	109		6.3	1.7
563-58-6	1,1-Dichloropropene	117		6.3	1.8
87-61-6	1,2,3-Trichlorobenzene	112		6.3	2.2
96-18-4	1,2,3-Trichloropropane	138		6.3	3.4
526-73-8	1,2,3-Trimethylbenzene	1.4	U	31	1.4
120-82-1	1,2,4-Trichlorobenzene	105		6.3	1.7
95-63-6	1,2,4-Trimethylbenzene	121		6.3	1.5
96-12-8	1,2-Dibromo-3-Chloropropane	117		13	2.9
95-50-1	1,2-Dichlorobenzene	121		6.3	1.6
107-06-2	1,2-Dichloroethane	109		6.3	1.9
78-87-5	1,2-Dichloropropane	123		6.3	1.9
541-73-1	1,3-Dichlorobenzene	118		6.3	2.0
142-28-9	1,3-Dichloropropane	130		6.3	1.8
106-46-7	1,4-Dichlorobenzene	115		6.3	1.4
594-20-7	2,2-Dichloropropane	99.5		6.3	2.1
78-93-3	2-Butanone (MEK)	224		63	6.4
110-75-8	2-Chloroethyl vinyl ether	4.1	U	63	4.1
95-49-8	2-Chlorotoluene	126		6.3	1.8
591-78-6	2-Hexanone	246		63	7.7
106-43-4	4-Chlorotoluene	125		6.3	1.4
99-87-6	p-Isopropyltoluene	115		6.3	1.8
108-10-1	4-Methyl-2-pentanone (MIBK)	229		63	4.4
67-64-1	Acetone	173		63	11
71-43-2	Benzene	116		6.3	1.8
108-86-1	Bromobenzene	122		6.3	1.9
75-25-2	Bromoform	110		6.3	2.7
74-83-9	Bromomethane	95.6		6.3	2.6
75-15-0	Carbon disulfide	109		6.3	2.1
56-23-5	Carbon tetrachloride	100		6.3	2.2
108-90-7	Chlorobenzene	121		6.3	2.0

FORM I
GC/MS VOA ORGANICS ANALYSIS DATA SHEET

Lab Name: TestAmerica Canton | Job No.: 240-81698-1
SDG No.:
Client Sample ID: WC-FDCON-062817 MS | Lab Sample ID: 240-81698-4 MS
Matrix: Water | Lab File ID: UXM4254.D
Analysis Method: 8260C | Date Collected: 06/28/2017 08:55
Sample wt/vol: 5(mL) | Date Analyzed: 07/05/2017 17:05
Soil Aliquot Vol: | Dilution Factor: 6.25
Soil Extract Vol.: | GC Column: DB-624 ID: 0.18(mm)
% Moisture: | Level: (low/med) Low
Analysis Batch No.: 285874 | Units: ug/L

CAS NO.	COMPOUND NAME	RESULT	Q	RL	MDL
124-48-1	Dibromochloromethane	119		6.3	1.6
75-00-3	Chloroethane	110		6.3	2.6
67-66-3	Chloroform	118		6.3	1.9
74-87-3	Chloromethane	96.8		6.3	2.7
156-59-2	cis-1,2-Dichloroethene	115		6.3	1.9
10061-01-5	cis-1,3-Dichloropropene	106		6.3	1.6
74-95-3	Dibromomethane	103		6.3	2.9
74-97-5	Bromochloromethane	106		6.3	2.9
75-71-8	Dichlorodifluoromethane	98.2		6.3	3.1
75-27-4	Bromodichloromethane	105		6.3	1.9
75-65-0	tert-Butyl alcohol (TBA)	1030		310	28
100-41-4	Ethylbenzene	123		6.3	1.6
87-68-3	Hexachlorobutadiene	88.1		6.3	2.3
108-20-3	Diisopropyl ether	2.8	U	63	2.8
98-82-8	Isopropylbenzene	111		6.3	1.3
1634-04-4	Methyl tert-butyl ether	106		6.3	1.7
75-09-2	Methylene Chloride	103		6.3	3.3
179601-23-1	m-Xylene & p-Xylene	121		13	1.5
91-20-3	Naphthalene	114		6.3	1.6
104-51-8	n-Butylbenzene	111		6.3	1.3
103-65-1	N-Propylbenzene	127		6.3	2.8
95-47-6	o-Xylene	117		6.3	1.8
135-98-8	sec-Butylbenzene	117		6.3	1.7
100-42-5	Styrene	118		6.3	1.4
994-05-8	Tert-amyl methyl ether	1.8	U	31	1.8
637-92-3	Ethyl t-butyl ether	2.2	U	31	2.2
127-18-4	Tetrachloroethene	120		6.3	1.9
108-88-3	Toluene	128		6.3	1.4
156-60-5	trans-1,2-Dichloroethene	113		6.3	1.8
10061-02-6	trans-1,3-Dichloropropene	115		6.3	1.9
79-01-6	Trichloroethene	406		6.3	2.1
75-69-4	Trichlorofluoromethane	99.1		6.3	3.1
108-05-4	Vinyl acetate	128		13	1.8
75-01-4	Vinyl chloride	108		6.3	2.8
1330-20-7	Xylenes, Total	238		13	1.5
98-06-6	tert-Butylbenzene	117		6.3	1.6

FORM I
GC/MS VOA ORGANICS ANALYSIS DATA SHEET

Lab Name: TestAmerica Canton | Job No.: 240-81698-1

SDG No.:

Client Sample ID: WC-FDCON-062817 MS | Lab Sample ID: 240-81698-4 MS

Matrix: Water | Lab File ID: UXM4254.D

Analysis Method: 8260C | Date Collected: 06/28/2017 08:55

Sample wt/vol: 5(mL) | Date Analyzed: 07/05/2017 17:05

Soil Aliquot Vol: | Dilution Factor: 6.25

Soil Extract Vol.: | GC Column: DB-624 ID: 0.18(mm)

% Moisture: | Level: (low/med) Low

Analysis Batch No.: 285874 | Units: ug/L

CAS NO.	COMPOUND NAME	RESULT	Q	RL	MDL
106-93-4	1,2-Dibromoethane	125		6.3	1.4

CAS NO.	SURROGATE	%REC	Q	LIMITS
2037-26-5	Toluene-d8 (Surr)	107		73-120
1868-53-7	Dibromofluoromethane (Surr)	86		69-124
460-00-4	4-Bromofluorobenzene (Surr)	96		69-120
17060-07-0	1,2-Dichloroethane-d4 (Surr)	86		61-138

FORM I
GC/MS VOA ORGANICS ANALYSIS DATA SHEET

Lab Name: TestAmerica Canton | Job No.: 240-81698-1

SDG No.:

Client Sample ID: | Lab Sample ID: 240-81733-B-18-D MS

Matrix: Solid | Lab File ID: UX81023.D

Analysis Method: 8260C | Date Collected: 06/27/2017 10:50

Sample wt/vol: 5.08(g) | Date Analyzed: 07/03/2017 08:15

Soil Aliquot Vol: | Dilution Factor: 1

Soil Extract Vol.: | GC Column: DB-624 ID: 0.18(mm)

% Moisture: 7.9 | Level: (low/med) Low

Analysis Batch No.: 285711 | Units: ug/Kg

CAS NO.	COMPOUND NAME	RESULT	Q	RL	MDL
71-55-6	1,1,1-Trichloroethane	22.3		5.3	0.25
79-34-5	1,1,2,2-Tetrachloroethane	0.695	J	5.3	0.28
76-13-1	1,1,2-Trichloro-1,2,2-trifluoroethane	22.4		5.3	0.52
75-34-3	1,1-Dichloroethane	21.9		5.3	0.35
75-35-4	1,1-Dichloroethene	24.8		5.3	0.58
120-82-1	1,2,4-Trichlorobenzene	9.47		5.3	0.26
95-63-6	1,2,4-Trimethylbenzene	19.1		5.3	0.27
96-12-8	1,2-Dibromo-3-Chloropropane	12.4		11	0.73
95-50-1	1,2-Dichlorobenzene	15.9		5.3	0.23
107-06-2	1,2-Dichloroethane	21.0		5.3	0.31
78-87-5	1,2-Dichloropropane	21.2		5.3	0.33
541-73-1	1,3-Dichlorobenzene	15.9		5.3	0.31
106-46-7	1,4-Dichlorobenzene	15.1		5.3	0.37
78-93-3	2-Butanone (MEK)	43.5		21	1.4
591-78-6	2-Hexanone	60.0		21	0.62
108-10-1	4-Methyl-2-pentanone (MIBK)	45.9		21	0.95
67-64-1	Acetone	49.4		21	3.3
71-43-2	Benzene	20.6		5.3	0.34
75-25-2	Bromoform	14.8		5.3	0.43
74-83-9	Bromomethane	21.6		5.3	0.63
75-15-0	Carbon disulfide	18.2		5.3	0.22
56-23-5	Carbon tetrachloride	19.6		5.3	0.27
108-90-7	Chlorobenzene	18.1		5.3	0.35
124-48-1	Dibromochloromethane	16.7		5.3	0.32
75-00-3	Chloroethane	22.6		5.3	0.41
67-66-3	Chloroform	20.5		5.3	0.25
74-87-3	Chloromethane	23.1		5.3	0.41
156-59-2	cis-1,2-Dichloroethene	20.8		5.3	0.30
10061-01-5	cis-1,3-Dichloropropene	17.1		5.3	0.28
75-71-8	Dichlorodifluoromethane	23.0		5.3	0.37
75-27-4	Bromodichloromethane	18.4		5.3	0.35
100-41-4	Ethylbenzene	17.8		5.3	0.29
98-82-8	Isopropylbenzene	18.0		5.3	0.21
1634-04-4	Methyl tert-butyl ether	22.6		5.3	0.29
75-09-2	Methylene Chloride	22.5		5.3	0.26

FORM I
GC/MS VOA ORGANICS ANALYSIS DATA SHEET

Lab Name: TestAmerica Canton | Job No.: 240-81698-1

SDG No.:

Client Sample ID: | Lab Sample ID: 240-81733-B-18-D MS

Matrix: Solid | Lab File ID: UX81023.D

Analysis Method: 8260C | Date Collected: 06/27/2017 10:50

Sample wt/vol: 5.08(g) | Date Analyzed: 07/03/2017 08:15

Soil Aliquot Vol: | Dilution Factor: 1

Soil Extract Vol.: | GC Column: DB-624 ID: 0.18(mm)

% Moisture: 7.9 | Level: (low/med) Low

Analysis Batch No.: 285711 | Units: ug/Kg

CAS NO.	COMPOUND NAME	RESULT	Q	RL	MDL
179601-23-1	m-Xylene & p-Xylene	18.6		11	0.43
104-51-8	n-Butylbenzene	14.3		5.3	0.27
103-65-1	N-Propylbenzene	19.3		5.3	0.30
95-47-6	o-Xylene	19.0		5.3	0.23
135-98-8	sec-Butylbenzene	18.2		5.3	0.20
100-42-5	Styrene	16.2		5.3	0.29
127-18-4	Tetrachloroethene	18.3		5.3	0.40
108-88-3	Toluene	20.2		5.3	0.36
156-60-5	trans-1,2-Dichloroethene	22.9		5.3	0.41
10061-02-6	trans-1,3-Dichloropropene	15.0		5.3	0.22
79-01-6	Trichloroethene	33.9		5.3	0.44
75-69-4	Trichlorofluoromethane	22.1		5.3	0.26
75-01-4	Vinyl chloride	23.1		5.3	0.30
1330-20-7	Xylenes, Total	37.6		11	0.43
98-06-6	tert-Butylbenzene	20.8		5.3	0.22
106-93-4	1,2-Dibromoethane	19.2		5.3	0.37

CAS NO.	SURROGATE	%REC	Q	LIMITS
2037-26-5	Toluene-d8 (Surr)	97		66-125
1868-53-7	Dibromofluoromethane (Surr)	59		43-131
460-00-4	4-Bromofluorobenzene (Surr)	87		61-132
17060-07-0	1,2-Dichloroethane-d4 (Surr)	85		61-127

FORM I
GC/MS VOA ORGANICS ANALYSIS DATA SHEET

Lab Name: TestAmerica Canton | Job No.: 240-81698-1
SDG No.:
Client Sample ID: | Lab Sample ID: 240-81718-E-1 MS
Matrix: Water | Lab File ID: UXM4306.D
Analysis Method: 8260C | Date Collected: 06/27/2017 11:05
Sample wt/vol: 5(mL) | Date Analyzed: 07/06/2017 17:05
Soil Aliquot Vol: | Dilution Factor: 1
Soil Extract Vol.: | GC Column: DB-624 ID: 0.18(mm)
% Moisture: | Level: (low/med) Low
Analysis Batch No.: 286045 | Units: ug/L

CAS NO.	COMPOUND NAME	RESULT	Q	RL	MDL
630-20-6	1,1,1,2-Tetrachloroethane	18.3		1.0	0.46
71-55-6	1,1,1-Trichloroethane	17.3		1.0	0.23
79-34-5	1,1,2,2-Tetrachloroethane	21.7		1.0	0.32
75-34-3	1,1-Dichloroethane	18.5		1.0	0.25
75-35-4	1,1-Dichloroethene	17.2		1.0	0.27
96-18-4	1,2,3-Trichloropropane	21.6		1.0	0.54
95-50-1	1,2-Dichlorobenzene	19.9		1.0	0.26
107-06-2	1,2-Dichloroethane	17.1		1.0	0.30
78-87-5	1,2-Dichloropropane	19.9		1.0	0.30
106-46-7	1,4-Dichlorobenzene	19.2		1.0	0.23
78-93-3	2-Butanone (MEK)	34.1		10	1.0
591-78-6	2-Hexanone	40.9		10	1.2
108-10-1	4-Methyl-2-pentanone (MIBK)	37.9		10	0.71
67-64-1	Acetone	25.8		10	1.8
71-43-2	Benzene	18.9		1.0	0.28
75-25-2	Bromoform	16.7		1.0	0.43
74-83-9	Bromomethane	16.5		1.0	0.42
75-15-0	Carbon disulfide	18.4		1.0	0.34
56-23-5	Carbon tetrachloride	16.6		1.0	0.35
108-90-7	Chlorobenzene	19.8		1.0	0.32
124-48-1	Dibromochloromethane	18.7		1.0	0.25
75-00-3	Chloroethane	18.7		1.0	0.41
67-66-3	Chloroform	17.2		1.0	0.31
74-87-3	Chloromethane	16.0		1.0	0.43
156-59-2	cis-1,2-Dichloroethene	17.5		1.0	0.30
10061-01-5	cis-1,3-Dichloropropene	17.4		1.0	0.26
74-95-3	Dibromomethane	16.5		1.0	0.46
74-97-5	Bromochloromethane	17.8		1.0	0.47
75-27-4	Bromodichloromethane	17.4		1.0	0.30
100-41-4	Ethylbenzene	20.1		1.0	0.26
75-09-2	Methylene Chloride	16.6		1.0	0.53
179601-23-1	m-Xylene & p-Xylene	19.6		2.0	0.24
95-47-6	o-Xylene	19.3		1.0	0.28
100-42-5	Styrene	19.5		1.0	0.23
127-18-4	Tetrachloroethene	19.9		1.0	0.30
108-88-3	Toluene	21.0		1.0	0.23

FORM I
GC/MS VOA ORGANICS ANALYSIS DATA SHEET

Lab Name: TestAmerica Canton | Job No.: 240-81698-1

SDG No.:

Client Sample ID: | Lab Sample ID: 240-81718-E-1 MS

Matrix: Water | Lab File ID: UXM4306.D

Analysis Method: 8260C | Date Collected: 06/27/2017 11:05

Sample wt/vol: 5(mL) | Date Analyzed: 07/06/2017 17:05

Soil Aliquot Vol: | Dilution Factor: 1

Soil Extract Vol.: | GC Column: DB-624 ID: 0.18(mm)

% Moisture: | Level: (low/med) Low

Analysis Batch No.: 286045 | Units: ug/L

CAS NO.	COMPOUND NAME	RESULT	Q	RL	MDL
156-60-5	trans-1,2-Dichloroethene	18.3		1.0	0.29
10061-02-6	trans-1,3-Dichloropropene	18.7		1.0	0.31
79-01-6	Trichloroethene	17.4		1.0	0.33
75-69-4	Trichlorofluoromethane	16.1		1.0	0.50
108-05-4	Vinyl acetate	19.8		2.0	0.28
75-01-4	Vinyl chloride	17.8		1.0	0.45
1330-20-7	Xylenes, Total	38.9		2.0	0.24

CAS NO.	SURROGATE	%REC	Q	LIMITS
2037-26-5	Toluene-d8 (Surr)	107		73-120
1868-53-7	Dibromofluoromethane (Surr)	87		69-124
460-00-4	4-Bromofluorobenzene (Surr)	96		69-120
17060-07-0	1,2-Dichloroethane-d4 (Surr)	90		61-138

FORM I
GC/MS VOA ORGANICS ANALYSIS DATA SHEET

Lab Name: TestAmerica Canton | Job No.: 240-81698-1

SDG No.:

Client Sample ID: WC-FDCON-062817 MSD | Lab Sample ID: 240-81698-4 MSD

Matrix: Water | Lab File ID: UXM4255.D

Analysis Method: 8260C | Date Collected: 06/28/2017 08:55

Sample wt/vol: 5(mL) | Date Analyzed: 07/05/2017 17:28

Soil Aliquot Vol: | Dilution Factor: 6.25

Soil Extract Vol.: | GC Column: DB-624 ID: 0.18(mm)

% Moisture: | Level: (low/med) Low

Analysis Batch No.: 285874 | Units: ug/L

CAS NO.	COMPOUND NAME	RESULT	Q	RL	MDL
630-20-6	1,1,1,2-Tetrachloroethane	112		6.3	2.9
71-55-6	1,1,1-Trichloroethane	104		6.3	1.4
79-34-5	1,1,2,2-Tetrachloroethane	137		6.3	2.0
76-13-1	1,1,2-Trichloro-1,2,2-trifluoroethane	112		6.3	2.6
75-34-3	1,1-Dichloroethane	112		6.3	1.6
75-35-4	1,1-Dichloroethene	106		6.3	1.7
563-58-6	1,1-Dichloropropene	113		6.3	1.8
87-61-6	1,2,3-Trichlorobenzene	112		6.3	2.2
96-18-4	1,2,3-Trichloropropane	137		6.3	3.4
526-73-8	1,2,3-Trimethylbenzene	1.4	U	31	1.4
120-82-1	1,2,4-Trichlorobenzene	106		6.3	1.7
95-63-6	1,2,4-Trimethylbenzene	119		6.3	1.5
96-12-8	1,2-Dibromo-3-Chloropropane	110		13	2.9
95-50-1	1,2-Dichlorobenzene	119		6.3	1.6
107-06-2	1,2-Dichloroethane	106		6.3	1.9
78-87-5	1,2-Dichloropropane	120		6.3	1.9
541-73-1	1,3-Dichlorobenzene	115		6.3	2.0
142-28-9	1,3-Dichloropropane	129		6.3	1.8
106-46-7	1,4-Dichlorobenzene	115		6.3	1.4
594-20-7	2,2-Dichloropropane	102		6.3	2.1
78-93-3	2-Butanone (MEK)	228		63	6.4
110-75-8	2-Chloroethyl vinyl ether	4.1	U	63	4.1
95-49-8	2-Chlorotoluene	124		6.3	1.8
591-78-6	2-Hexanone	247		63	7.7
106-43-4	4-Chlorotoluene	122		6.3	1.4
99-87-6	p-Isopropyltoluene	112		6.3	1.8
108-10-1	4-Methyl-2-pentanone (MIBK)	225		63	4.4
67-64-1	Acetone	175		63	11
71-43-2	Benzene	113		6.3	1.8
108-86-1	Bromobenzene	120		6.3	1.9
75-25-2	Bromoform	107		6.3	2.7
74-83-9	Bromomethane	99.6		6.3	2.6
75-15-0	Carbon disulfide	109		6.3	2.1
56-23-5	Carbon tetrachloride	99.8		6.3	2.2
108-90-7	Chlorobenzene	116		6.3	2.0

FORM I
GC/MS VOA ORGANICS ANALYSIS DATA SHEET

Lab Name: TestAmerica Canton | Job No.: 240-81698-1

SDG No.:

Client Sample ID: WC-FDCON-062817 MSD | Lab Sample ID: 240-81698-4 MSD

Matrix: Water | Lab File ID: UXM4255.D

Analysis Method: 8260C | Date Collected: 06/28/2017 08:55

Sample wt/vol: 5(mL) | Date Analyzed: 07/05/2017 17:28

Soil Aliquot Vol: | Dilution Factor: 6.25

Soil Extract Vol.: | GC Column: DB-624 ID: 0.18(mm)

% Moisture: | Level: (low/med) Low

Analysis Batch No.: 285874 | Units: ug/L

CAS NO.	COMPOUND NAME	RESULT	Q	RL	MDL
124-48-1	Dibromochloromethane	118		6.3	1.6
75-00-3	Chloroethane	114		6.3	2.6
67-66-3	Chloroform	116		6.3	1.9
74-87-3	Chloromethane	98.4		6.3	2.7
156-59-2	cis-1,2-Dichloroethene	113		6.3	1.9
10061-01-5	cis-1,3-Dichloropropene	105		6.3	1.6
74-95-3	Dibromomethane	102		6.3	2.9
74-97-5	Bromochloromethane	110		6.3	2.9
75-71-8	Dichlorodifluoromethane	93.9		6.3	3.1
75-27-4	Bromodichloromethane	107		6.3	1.9
75-65-0	tert-Butyl alcohol (TBA)	1030		310	28
100-41-4	Ethylbenzene	118		6.3	1.6
87-68-3	Hexachlorobutadiene	95.4		6.3	2.3
108-20-3	Diisopropyl ether	2.8	U	63	2.8
98-82-8	Isopropylbenzene	108		6.3	1.3
1634-04-4	Methyl tert-butyl ether	107		6.3	1.7
75-09-2	Methylene Chloride	105		6.3	3.3
179601-23-1	m-Xylene & p-Xylene	115		13	1.5
91-20-3	Naphthalene	117		6.3	1.6
104-51-8	n-Butylbenzene	112		6.3	1.3
103-65-1	N-Propylbenzene	122		6.3	2.8
95-47-6	o-Xylene	114		6.3	1.8
135-98-8	sec-Butylbenzene	113		6.3	1.7
100-42-5	Styrene	116		6.3	1.4
994-05-8	Tert-amyl methyl ether	1.8	U	31	1.8
637-92-3	Ethyl t-butyl ether	2.2	U	31	2.2
127-18-4	Tetrachloroethene	116		6.3	1.9
108-88-3	Toluene	125		6.3	1.4
156-60-5	trans-1,2-Dichloroethene	109		6.3	1.8
10061-02-6	trans-1,3-Dichloropropene	115		6.3	1.9
79-01-6	Trichloroethene	403		6.3	2.1
75-69-4	Trichlorofluoromethane	97.6		6.3	3.1
108-05-4	Vinyl acetate	127		13	1.8
75-01-4	Vinyl chloride	109		6.3	2.8
1330-20-7	Xylenes, Total	229		13	1.5
98-06-6	tert-Butylbenzene	114		6.3	1.6

FORM I
GC/MS VOA ORGANICS ANALYSIS DATA SHEET

Lab Name: TestAmerica Canton | Job No.: 240-81698-1

SDG No.:

Client Sample ID: WC-FDCON-062817 MSD | Lab Sample ID: 240-81698-4 MSD

Matrix: Water | Lab File ID: UXM4255.D

Analysis Method: 8260C | Date Collected: 06/28/2017 08:55

Sample wt/vol: 5(mL) | Date Analyzed: 07/05/2017 17:28

Soil Aliquot Vol: | Dilution Factor: 6.25

Soil Extract Vol.: | GC Column: DB-624 ID: 0.18(mm)

% Moisture: | Level: (low/med) Low

Analysis Batch No.: 285874 | Units: ug/L

CAS NO.	COMPOUND NAME	RESULT	Q	RL	MDL
106-93-4	1,2-Dibromoethane	124		6.3	1.4

CAS NO.	SURROGATE	%REC	Q	LIMITS
2037-26-5	Toluene-d8 (Surr)	106		73-120
1868-53-7	Dibromofluoromethane (Surr)	85		69-124
460-00-4	4-Bromofluorobenzene (Surr)	93		69-120
17060-07-0	1,2-Dichloroethane-d4 (Surr)	86		61-138

FORM I
GC/MS VOA ORGANICS ANALYSIS DATA SHEET

Lab Name: TestAmerica Canton | Job No.: 240-81698-1

SDG No.:

Client Sample ID: | Lab Sample ID: 240-81733-B-18-E MSD

Matrix: Solid | Lab File ID: UX81024.D

Analysis Method: 8260C | Date Collected: 06/27/2017 10:50

Sample wt/vol: 5.40(g) | Date Analyzed: 07/03/2017 08:37

Soil Aliquot Vol: | Dilution Factor: 1

Soil Extract Vol.: | GC Column: DB-624 ID: 0.18(mm)

% Moisture: 7.9 | Level: (low/med) Low

Analysis Batch No.: 285711 | Units: ug/Kg

CAS NO.	COMPOUND NAME	RESULT	Q	RL	MDL
71-55-6	1,1,1-Trichloroethane	18.1		5.0	0.23
79-34-5	1,1,2,2-Tetrachloroethane	0.442	J	5.0	0.26
76-13-1	1,1,2-Trichloro-1,2,2-trifluoroethane	18.4		5.0	0.49
75-34-3	1,1-Dichloroethane	17.8		5.0	0.33
75-35-4	1,1-Dichloroethene	20.4		5.0	0.54
120-82-1	1,2,4-Trichlorobenzene	7.62		5.0	0.24
95-63-6	1,2,4-Trimethylbenzene	13.6		5.0	0.25
96-12-8	1,2-Dibromo-3-Chloropropane	9.46	J	10	0.68
95-50-1	1,2-Dichlorobenzene	12.2		5.0	0.22
107-06-2	1,2-Dichloroethane	17.3		5.0	0.29
78-87-5	1,2-Dichloropropane	18.1		5.0	0.31
541-73-1	1,3-Dichlorobenzene	11.8		5.0	0.29
106-46-7	1,4-Dichlorobenzene	11.1		5.0	0.35
78-93-3	2-Butanone (MEK)	33.6		20	1.3
591-78-6	2-Hexanone	43.7		20	0.58
108-10-1	4-Methyl-2-pentanone (MIBK)	35.8		20	0.89
67-64-1	Acetone	40.2		20	3.1
71-43-2	Benzene	17.4		5.0	0.32
75-25-2	Bromoform	13.3		5.0	0.40
74-83-9	Bromomethane	18.1		5.0	0.59
75-15-0	Carbon disulfide	14.4		5.0	0.21
56-23-5	Carbon tetrachloride	16.3		5.0	0.25
108-90-7	Chlorobenzene	14.6		5.0	0.33
124-48-1	Dibromochloromethane	14.2		5.0	0.30
75-00-3	Chloroethane	18.8		5.0	0.38
67-66-3	Chloroform	17.0		5.0	0.23
74-87-3	Chloromethane	19.8		5.0	0.38
156-59-2	cis-1,2-Dichloroethene	17.2		5.0	0.28
10061-01-5	cis-1,3-Dichloropropene	13.7		5.0	0.26
75-71-8	Dichlorodifluoromethane	18.9		5.0	0.35
75-27-4	Bromodichloromethane	15.3		5.0	0.33
100-41-4	Ethylbenzene	14.2		5.0	0.27
98-82-8	Isopropylbenzene	14.5		5.0	0.20
1634-04-4	Methyl tert-butyl ether	18.5		5.0	0.27
75-09-2	Methylene Chloride	18.0		5.0	0.24

FORM I
GC/MS VOA ORGANICS ANALYSIS DATA SHEET

Lab Name: TestAmerica Canton | Job No.: 240-81698-1

SDG No.:

Client Sample ID: | Lab Sample ID: 240-81733-B-18-E MSD

Matrix: Solid | Lab File ID: UX81024.D

Analysis Method: 8260C | Date Collected: 06/27/2017 10:50

Sample wt/vol: 5.40(g) | Date Analyzed: 07/03/2017 08:37

Soil Aliquot Vol: | Dilution Factor: 1

Soil Extract Vol.: | GC Column: DB-624 ID: 0.18(mm)

% Moisture: 7.9 | Level: (low/med) Low

Analysis Batch No.: 285711 | Units: ug/Kg

CAS NO.	COMPOUND NAME	RESULT	Q	RL	MDL
179601-23-1	m-Xylene & p-Xylene	14.7		10	0.40
104-51-8	n-Butylbenzene	10.4		5.0	0.25
103-65-1	N-Propylbenzene	13.6		5.0	0.28
95-47-6	o-Xylene	15.2		5.0	0.22
135-98-8	sec-Butylbenzene	13.2		5.0	0.19
100-42-5	Styrene	13.2		5.0	0.27
127-18-4	Tetrachloroethene	15.3		5.0	0.37
108-88-3	Toluene	16.0		5.0	0.34
156-60-5	trans-1,2-Dichloroethene	17.9		5.0	0.38
10061-02-6	trans-1,3-Dichloropropene	12.3		5.0	0.21
79-01-6	Trichloroethene	27.9		5.0	0.41
75-69-4	Trichlorofluoromethane	18.7		5.0	0.24
75-01-4	Vinyl chloride	19.2		5.0	0.28
1330-20-7	Xylenes, Total	29.9		10	0.40
98-06-6	tert-Butylbenzene	14.9		5.0	0.21
106-93-4	1,2-Dibromoethane	16.4		5.0	0.35

CAS NO.	SURROGATE	%REC	Q	LIMITS
2037-26-5	Toluene-d8 (Surr)	96		66-125
1868-53-7	Dibromofluoromethane (Surr)	70		43-131
460-00-4	4-Bromofluorobenzene (Surr)	93		61-132
17060-07-0	1,2-Dichloroethane-d4 (Surr)	88		61-127

FORM I
GC/MS VOA ORGANICS ANALYSIS DATA SHEET

Lab Name: TestAmerica Canton | Job No.: 240-81698-1
SDG No.:
Client Sample ID: | Lab Sample ID: 240-81718-H-1 MSD
Matrix: Water | Lab File ID: UXM4307.D
Analysis Method: 8260C | Date Collected: 06/27/2017 11:05
Sample wt/vol: 5(mL) | Date Analyzed: 07/06/2017 17:31
Soil Aliquot Vol: | Dilution Factor: 1
Soil Extract Vol.: | GC Column: DB-624 ID: 0.18(mm)
% Moisture: | Level: (low/med) Low
Analysis Batch No.: 286045 | Units: ug/L

CAS NO.	COMPOUND NAME	RESULT	Q	RL	MDL
630-20-6	1,1,1,2-Tetrachloroethane	20.1		1.0	0.46
71-55-6	1,1,1-Trichloroethane	18.3		1.0	0.23
79-34-5	1,1,2,2-Tetrachloroethane	22.8		1.0	0.32
75-34-3	1,1-Dichloroethane	19.8		1.0	0.25
75-35-4	1,1-Dichloroethene	18.6		1.0	0.27
96-18-4	1,2,3-Trichloropropane	22.7		1.0	0.54
95-50-1	1,2-Dichlorobenzene	21.3		1.0	0.26
107-06-2	1,2-Dichloroethane	18.2		1.0	0.30
78-87-5	1,2-Dichloropropane	21.2		1.0	0.30
106-46-7	1,4-Dichlorobenzene	21.0		1.0	0.23
78-93-3	2-Butanone (MEK)	35.7		10	1.0
591-78-6	2-Hexanone	43.7		10	1.2
108-10-1	4-Methyl-2-pentanone (MIBK)	39.4		10	0.71
67-64-1	Acetone	27.1		10	1.8
71-43-2	Benzene	20.0		1.0	0.28
75-25-2	Bromoform	18.2		1.0	0.43
74-83-9	Bromomethane	17.0		1.0	0.42
75-15-0	Carbon disulfide	19.4		1.0	0.34
56-23-5	Carbon tetrachloride	17.8		1.0	0.35
108-90-7	Chlorobenzene	20.9		1.0	0.32
124-48-1	Dibromochloromethane	20.2		1.0	0.25
75-00-3	Chloroethane	18.8		1.0	0.41
67-66-3	Chloroform	18.5		1.0	0.31
74-87-3	Chloromethane	16.4		1.0	0.43
156-59-2	cis-1,2-Dichloroethene	18.4		1.0	0.30
10061-01-5	cis-1,3-Dichloropropene	18.8		1.0	0.26
74-95-3	Dibromomethane	17.3		1.0	0.46
74-97-5	Bromochloromethane	18.3		1.0	0.47
75-27-4	Bromodichloromethane	18.6		1.0	0.30
100-41-4	Ethylbenzene	21.7		1.0	0.26
75-09-2	Methylene Chloride	17.9		1.0	0.53
179601-23-1	m-Xylene & p-Xylene	21.2		2.0	0.24
95-47-6	o-Xylene	20.7		1.0	0.28
100-42-5	Styrene	20.6		1.0	0.23
127-18-4	Tetrachloroethene	20.6		1.0	0.30
108-88-3	Toluene	22.6		1.0	0.23

FORM I
GC/MS VOA ORGANICS ANALYSIS DATA SHEET

Lab Name: TestAmerica Canton | Job No.: 240-81698-1

SDG No.:

Client Sample ID: | Lab Sample ID: 240-81718-H-1 MSD

Matrix: Water | Lab File ID: UXM4307.D

Analysis Method: 8260C | Date Collected: 06/27/2017 11:05

Sample wt/vol: 5(mL) | Date Analyzed: 07/06/2017 17:31

Soil Aliquot Vol: | Dilution Factor: 1

Soil Extract Vol.: | GC Column: DB-624 ID: 0.18(mm)

% Moisture: | Level: (low/med) Low

Analysis Batch No.: 286045 | Units: ug/L

CAS NO.	COMPOUND NAME	RESULT	Q	RL	MDL
156-60-5	trans-1,2-Dichloroethene	19.6		1.0	0.29
10061-02-6	trans-1,3-Dichloropropene	20.3		1.0	0.31
79-01-6	Trichloroethene	18.4		1.0	0.33
75-69-4	Trichlorofluoromethane	16.6		1.0	0.50
108-05-4	Vinyl acetate	21.2		2.0	0.28
75-01-4	Vinyl chloride	18.3		1.0	0.45
1330-20-7	Xylenes, Total	41.9		2.0	0.24

CAS NO.	SURROGATE	%REC	Q	LIMITS
2037-26-5	Toluene-d8 (Surr)	109		73-120
1868-53-7	Dibromofluoromethane (Surr)	88		69-124
460-00-4	4-Bromofluorobenzene (Surr)	98		69-120
17060-07-0	1,2-Dichloroethane-d4 (Surr)	87		61-138

GC/MS VOA ANALYSIS RUN LOG

Lab Name: TestAmerica Canton Job No.: 240-81698-1

SDG No.:

Instrument ID: A3UX16 Start Date: 03/29/2017 13:36

Analysis Batch Number: 272263 End Date: 03/29/2017 21:23

LAB SAMPLE ID	CLIENT SAMPLE ID	DATE ANALYZED	DILUTION FACTOR	LAB FILE ID	COLUMN ID
BFB 240-272263/1		03/29/2017 13:36	1	BFB5200.D	DB-624 0.18(mm)
STD8260 240-272263/6 IC		03/29/2017 14:02	1	UXM1388.D	DB-624 0.18(mm)
STD8260 240-272263/7 IC		03/29/2017 14:25	1	UXM1389.D	DB-624 0.18(mm)
STD8260 240-272263/8 IC		03/29/2017 14:48	1	UXM1390.D	DB-624 0.18(mm)
ICIS 240-272263/9		03/29/2017 15:11	1	UXM1391.D	DB-624 0.18(mm)
STD8260 240-272263/10 IC		03/29/2017 15:34	1	UXM1392.D	DB-624 0.18(mm)
STD8260 240-272263/11 IC		03/29/2017 15:56	1	UXM1393.D	DB-624 0.18(mm)
STDA9 240-272263/13 IC		03/29/2017 16:47	1	UXM1395.D	DB-624 0.18(mm)
STDA9 240-272263/14 IC		03/29/2017 17:10	1	UXM1396.D	DB-624 0.18(mm)
STDA9 240-272263/15 IC		03/29/2017 17:33	1	UXM1397.D	DB-624 0.18(mm)
STDA9 240-272263/16 IC		03/29/2017 17:55	1	UXM1398.D	DB-624 0.18(mm)
STDA9 240-272263/17 IC		03/29/2017 18:18	1	UXM1399.D	DB-624 0.18(mm)
STDA9 240-272263/18 IC		03/29/2017 18:41	1	UXM1400.D	DB-624 0.18(mm)
ICV 240-272263/20		03/29/2017 19:27	1	UXM1402.D	DB-624 0.18(mm)
ICV 240-272263/21		03/29/2017 19:50	1	UXM1403.D	DB-624 0.18(mm)
MDLV 240-272263/22		03/29/2017 20:13	1		DB-624 0.18(mm)
MDLV 240-272263/23		03/29/2017 20:37	1		DB-624 0.18(mm)
MDLV 240-272263/24		03/29/2017 21:00	1		DB-624 0.18(mm)
ZZZZZ		03/29/2017 21:23	1		DB-624 0.18(mm)

GC/MS VOA ANALYSIS RUN LOG

Lab Name: TestAmerica Canton Job No.: 240-81698-1

SDG No.:

Instrument ID: A3UX16 Start Date: 07/05/2017 06:31

Analysis Batch Number: 285874 End Date: 07/05/2017 17:28

LAB SAMPLE ID	CLIENT SAMPLE ID	DATE ANALYZED	DILUTION FACTOR	LAB FILE ID	COLUMN ID
BFB 240-285874/1		07/05/2017 06:31	1	BFB5321.D	DB-624 0.18(mm)
CCVIS 240-285874/2		07/05/2017 06:57	1	UXM4228.D	DB-624 0.18(mm)
LCS 240-285874/3		07/05/2017 07:20	1	UXM4229.D	DB-624 0.18(mm)
CCV 240-285874/4		07/05/2017 07:43	1	UXM4230.D	DB-624 0.18(mm)
MDLV 240-285874/5		07/05/2017 08:08	1		DB-624 0.18(mm)
MB 240-285874/6		07/05/2017 08:32	1	UXM4232.D	DB-624 0.18(mm)
MDLV 240-285874/7		07/05/2017 08:55	1		DB-624 0.18(mm)
ZZZZZ		07/05/2017 09:18	1		DB-624 0.18(mm)
ZZZZZ		07/05/2017 09:45	1		DB-624 0.18(mm)
ZZZZZ		07/05/2017 10:08	1		DB-624 0.18(mm)
ZZZZZ		07/05/2017 10:31	1		DB-624 0.18(mm)
ZZZZZ		07/05/2017 10:54	1		DB-624 0.18(mm)
ZZZZZ		07/05/2017 11:17	1		DB-624 0.18(mm)
ZZZZZ		07/05/2017 11:40	1		DB-624 0.18(mm)
ZZZZZ		07/05/2017 12:03	1		DB-624 0.18(mm)
ZZZZZ		07/05/2017 12:26	1		DB-624 0.18(mm)
ZZZZZ		07/05/2017 12:49	1		DB-624 0.18(mm)
240-81698-1		07/05/2017 13:13	1	UXM4244.D	DB-624 0.18(mm)
240-81698-4		07/05/2017 13:36	6.25	UXM4245.D	DB-624 0.18(mm)
ZZZZZ		07/05/2017 13:59	12.5		DB-624 0.18(mm)
ZZZZZ		07/05/2017 14:22	1		DB-624 0.18(mm)
ZZZZZ		07/05/2017 14:46	1		DB-624 0.18(mm)
ZZZZZ		07/05/2017 15:09	1		DB-624 0.18(mm)
ZZZZZ		07/05/2017 15:32	1		DB-624 0.18(mm)
ZZZZZ		07/05/2017 15:55	1		DB-624 0.18(mm)
ZZZZZ		07/05/2017 16:18	1		DB-624 0.18(mm)
ZZZZZ		07/05/2017 16:42	1		DB-624 0.18(mm)
240-81698-4 MS		07/05/2017 17:05	6.25	UXM4254.D	DB-624 0.18(mm)
240-81698-4 MSD		07/05/2017 17:28	6.25	UXM4255.D	DB-624 0.18(mm)

8260C

GC/MS VOA ANALYSIS RUN LOG

Lab Name: TestAmerica Canton Job No.: 240-81698-1

SDG No.:

Instrument ID: A3UX16 Start Date: 07/06/2017 07:41

Analysis Batch Number: 286045 End Date: 07/06/2017 17:31

LAB SAMPLE ID	CLIENT SAMPLE ID	DATE ANALYZED	DILUTION FACTOR	LAB FILE ID	COLUMN ID
BFB 240-286045/1		07/06/2017 07:41	1	BFB5323.D	DB-624 0.18(mm)
CCVIS 240-286045/2		07/06/2017 08:06	1	UXM4283.D	DB-624 0.18(mm)
LCS 240-286045/3		07/06/2017 08:29	1	UXM4284.D	DB-624 0.18(mm)
CCV 240-286045/4		07/06/2017 08:52	1	UXM4285.D	DB-624 0.18(mm)
MDLV 240-286045/5		07/06/2017 09:15	1		DB-624 0.18(mm)
MB 240-286045/6		07/06/2017 09:38	1	UXM4287.D	DB-624 0.18(mm)
MDLV 240-286045/7		07/06/2017 10:05	1		DB-624 0.18(mm)
ZZZZZ		07/06/2017 10:28	1		DB-624 0.18(mm)
ZZZZZ		07/06/2017 10:51	1		DB-624 0.18(mm)
ZZZZZ		07/06/2017 11:15	1		DB-624 0.18(mm)
ZZZZZ		07/06/2017 11:38	1		DB-624 0.18(mm)
ZZZZZ		07/06/2017 12:01	1		DB-624 0.18(mm)
ZZZZZ		07/06/2017 12:25	1		DB-624 0.18(mm)
ZZZZZ		07/06/2017 12:48	1		DB-624 0.18(mm)
ZZZZZ		07/06/2017 13:11	1		DB-624 0.18(mm)
ZZZZZ		07/06/2017 13:34	1		DB-624 0.18(mm)
240-81698-6		07/06/2017 13:58	50	UXM4298.D	DB-624 0.18(mm)
ZZZZZ		07/06/2017 14:21	6.25		DB-624 0.18(mm)
ZZZZZ		07/06/2017 14:44	1		DB-624 0.18(mm)
ZZZZZ		07/06/2017 15:07	1		DB-624 0.18(mm)
ZZZZZ		07/06/2017 15:31	1		DB-624 0.18(mm)
ZZZZZ		07/06/2017 15:54	1		DB-624 0.18(mm)
ZZZZZ		07/06/2017 16:17	12500		DB-624 0.18(mm)
ZZZZZ		07/06/2017 16:41	16.67		DB-624 0.18(mm)
240-81718-E-1 MS		07/06/2017 17:05	1	UXM4306.D	DB-624 0.18(mm)
240-81718-H-1 MSD		07/06/2017 17:31	1	UXM4307.D	DB-624 0.18(mm)

8260C

GC/MS VOA ANALYSIS RUN LOG

Lab Name: TestAmerica Canton Job No.: 240-81698-1

SDG No.:

Instrument ID: A3UX8 Start Date: 07/02/2017 04:39

Analysis Batch Number: 285694 End Date: 07/02/2017 12:59

LAB SAMPLE ID	CLIENT SAMPLE ID	DATE ANALYZED	DILUTION FACTOR	LAB FILE ID	COLUMN ID
BFB 240-285694/1		07/02/2017 04:39	1	BFB8386.D	DB-624 0.18(mm)
STD8260 240-285694/3 IC		07/02/2017 05:21	1	UX80983.D	DB-624 0.18(mm)
STD8260 240-285694/4 IC		07/02/2017 05:43	1	UX80984.D	DB-624 0.18(mm)
STD8260 240-285694/5 IC		07/02/2017 06:04	1	UX80985.D	DB-624 0.18(mm)
ICIS 240-285694/6		07/02/2017 06:26	1	UX80986.D	DB-624 0.18(mm)
STD8260 240-285694/7 IC		07/02/2017 06:48	1	UX80987.D	DB-624 0.18(mm)
STD8260 240-285694/8 IC		07/02/2017 07:09	1	UX80988.D	DB-624 0.18(mm)
STD8260 240-285694/9 IC		07/02/2017 07:31	1	UX80989.D	DB-624 0.18(mm)
STD8260 240-285694/10 IC		07/02/2017 07:53	1	UX80990.D	DB-624 0.18(mm)
STDA9 240-285694/11 IC		07/02/2017 08:14	1	UX80991.D	DB-624 0.18(mm)
STDA9 240-285694/12 IC		07/02/2017 08:36	1	UX80992.D	DB-624 0.18(mm)
STDA9 240-285694/13 IC		07/02/2017 08:58	1	UX80993.D	DB-624 0.18(mm)
STDA9 240-285694/14 IC		07/02/2017 09:19	1	UX80994.D	DB-624 0.18(mm)
STDA9 240-285694/15 IC		07/02/2017 09:41	1	UX80995.D	DB-624 0.18(mm)
STDA9 240-285694/16 IC		07/02/2017 10:03	1	UX80996.D	DB-624 0.18(mm)
STDA9 240-285694/17 IC		07/02/2017 10:26	1	UX80997.D	DB-624 0.18(mm)
STDA9 240-285694/18 IC		07/02/2017 10:48	1	UX80998.D	DB-624 0.18(mm)
ICV 240-285694/19		07/02/2017 11:10	1	UX80999.D	DB-624 0.18(mm)
ICV 240-285694/20		07/02/2017 11:32	1	UX81000.D	DB-624 0.18(mm)
ZZZZZ		07/02/2017 12:38	1		DB-624 0.18(mm)
ZZZZZ		07/02/2017 12:59	1		DB-624 0.18(mm)

GC/MS VOA ANALYSIS RUN LOG

Lab Name: TestAmerica Canton Job No.: 240-81698-1

SDG No.:

Instrument ID: A3UX8 Start Date: 07/03/2017 01:54

Analysis Batch Number: 285711 End Date: 07/03/2017 13:43

LAB SAMPLE ID	CLIENT SAMPLE ID	DATE ANALYZED	DILUTION FACTOR	LAB FILE ID	COLUMN ID
BFB 240-285711/1		07/03/2017 01:54	1	BFB8387.D	DB-624 0.18(mm)
CCVIS 240-285711/4		07/03/2017 02:26	1	UX81007.D	DB-624 0.18(mm)
CCV 240-285711/5		07/03/2017 02:47	1	UX81008.D	DB-624 0.18(mm)
LCS 240-285711/6		07/03/2017 03:10	1	UX81009.D	DB-624 0.18(mm)
MB 240-285711/7		07/03/2017 03:31	1	UX81010.D	DB-624 0.18(mm)
LCS 240-285711/8		07/03/2017 03:53	1	UX81011.D	DB-624 0.18(mm)
ZZZZZ		07/03/2017 04:15	1		DB-624 0.18(mm)
ZZZZZ		07/03/2017 04:36	1		DB-624 0.18(mm)
ZZZZZ		07/03/2017 04:58	1		DB-624 0.18(mm)
ZZZZZ		07/03/2017 05:20	1		DB-624 0.18(mm)
ZZZZZ		07/03/2017 05:42	1		DB-624 0.18(mm)
ZZZZZ		07/03/2017 06:04	1		DB-624 0.18(mm)
ZZZZZ		07/03/2017 06:25	1		DB-624 0.18(mm)
ZZZZZ		07/03/2017 06:48	1		DB-624 0.18(mm)
ZZZZZ		07/03/2017 07:09	1		DB-624 0.18(mm)
ZZZZZ		07/03/2017 07:53	1		DB-624 0.18(mm)
240-81733-B-18-D MS		07/03/2017 08:15	1	UX81023.D	DB-624 0.18(mm)
240-81733-B-18-E MSD		07/03/2017 08:37	1	UX81024.D	DB-624 0.18(mm)
240-81698-3		07/03/2017 09:20	1	UX81026.D	DB-624 0.18(mm)
240-81698-5		07/03/2017 09:42	1	UX81027.D	DB-624 0.18(mm)
ZZZZZ		07/03/2017 11:32	1.667		DB-624 0.18(mm)
ZZZZZ		07/03/2017 11:54	1		DB-624 0.18(mm)
ZZZZZ		07/03/2017 12:16	1		DB-624 0.18(mm)
ZZZZZ		07/03/2017 12:37	1		DB-624 0.18(mm)
ZZZZZ		07/03/2017 12:59	1		DB-624 0.18(mm)
ZZZZZ		07/03/2017 13:21	1		DB-624 0.18(mm)
ZZZZZ		07/03/2017 13:43	1		DB-624 0.18(mm)

8260C

GC/MS VOA BATCH WORKSHEET

Lab Name: TestAmerica Canton Job No.: 240-81698-1

SDG No.:

Batch Number: 285712 Batch Start Date: 07/03/17 03:32 Batch Analyst: Lata, Todd

Batch Method: 5030C Batch End Date:

Lab Sample ID	Client Sample ID	Method Chain	Basis	InitialAmount	FinalAmount				
240-81733-B-18 MS		5030C, 8260C	T	5.08 g	5 mL				
240-81733-B-18 MSD		5030C, 8260C	T	5.40 g	5 mL				
240-81698-B-3	WC-FSOIL-062817	5030C, 8260C	T	5.16 g	5 mL				
240-81698-B-5	WC-SGEO-062817	5030C, 8260C	T	5.03 g	5 mL				

Batch Notes	
Balance ID	B035
Blank Soil Lot Number	162639

Basis	Basis Description
T	Total/NA

The pound sign (#) in the amount added field denotes that the reagent was used undiluted. All calculations are performed using the stated concentration for this reagent.

Method 8082A

Polychlorinated Biphenyls (PCBs) (GC) by Method 8082A

FORM II
PCBS SURROGATE RECOVERY

Lab Name: TestAmerica Canton Job No.: 240-81698-1

SDG No.:

Matrix: Solid Level: Low

GC Column (2): CLP-1 (0.53 ID: 0.53(mm)

Client Sample ID	Lab Sample ID	TCX2 #	DCBP2 #
WC-FSOIL-062817	240-81698-3	71	78
WC-SGEO-062817	240-81698-5	86	91
	MB 240-285979/22-A	72	83
	LCS 240-285979/23-A	63	72
WC-SGEO-062817 MS	240-81698-5 MS	101	108
WC-SGEO-062817 MSD	240-81698-5 MSD	90	117

	QC LIMITS
TCX = Tetrachloro-m-xylene	14-128
DCBP = DCB Decachlorobiphenyl	10-132

Column to be used to flag recovery values

FORM II 8082A

FORM II
PCBS SURROGATE RECOVERY

Lab Name: TestAmerica Canton Job No.: 240-81698-1

SDG No.:

Matrix: Water Level: Low

GC Column (1): CLP-2 (0.53 ID: 0.53(mm) GC Column (2): CLP-1 (0.53 ID: 0.53(mm)

Client Sample ID	Lab Sample ID	TCX1 #	TCX2 #	DCBP1 #	DCBP2 #
WC-FDCON-062817	240-81698-4	43		55	
WC-WGEO-062817	240-81698-6	46	49	27	27
	MB 240-285524/15-A	59		68	
	LCS 240-285524/16-A	54		68	

	QC LIMITS
TCX = Tetrachloro-m-xylene	21-120
DCBP = DCB Decachlorobiphenyl	10-120

Column to be used to flag recovery values

FORM II 8082A

FORM III
PCBS LAB CONTROL SAMPLE RECOVERY

Lab Name: TestAmerica Canton Job No.: 240-81698-1

SDG No.:

Matrix: Water Level: Low Lab File ID: P11070528.D

Lab ID: LCS 240-285524/16-A Client ID:

COMPOUND	SPIKE ADDED (ug/L)	LCS CONCENTRATION (ug/L)	LCS % REC	QC LIMITS REC	#
Aroclor-1016	2.50	1.19	47	32-120	
Aroclor-1260	2.50	1.52	61	36-120	

Column to be used to flag recovery and RPD values

FORM III 8082A

FORM III
PCBS LAB CONTROL SAMPLE RECOVERY

Lab Name: TestAmerica Canton Job No.: 240-81698-1

SDG No.:

Matrix: Solid Level: Low Lab File ID: P40707028.D

Lab ID: LCS 240-285979/23-A Client ID:

COMPOUND	SPIKE ADDED (ug/Kg)	LCS CONCENTRATION (ug/Kg)	LCS % REC	QC LIMITS REC	#
Aroclor-1016	1000	529	53	47-120	
Aroclor-1260	1000	610	61	46-120	

Column to be used to flag recovery and RPD values

FORM III 8082A

FORM III
PCBS MATRIX SPIKE RECOVERY

Lab Name: TestAmerica Canton Job No.: 240-81698-1

SDG No.:

Matrix: Solid Level: Low Lab File ID: P40707011.D

Lab ID: 240-81698-5 MS Client ID: WC-SGEO-062817 MS

COMPOUND	SPIKE ADDED (ug/Kg)	SAMPLE CONCENTRATION (ug/Kg)	MS CONCENTRATION (ug/Kg)	MS % REC	QC LIMITS REC	#
Aroclor-1016	1140	27 U	1060	92	31-120	
Aroclor-1260	1140	21 U	996	87	21-122	

Column to be used to flag recovery and RPD values

FORM III 8082A

FORM III
PCBS MATRIX SPIKE DUPLICATE RECOVERY

Lab Name: TestAmerica Canton Job No.: 240-81698-1

SDG No.:

Matrix: Solid Level: Low Lab File ID: P40707012.D

Lab ID: 240-81698-5 MSD Client ID: WC-SGEO-062817 MSD

COMPOUND	SPIKE ADDED (ug/Kg)	MSD CONCENTRATION (ug/Kg)	MSD % REC	% RPD	QC LIMITS RPD	QC LIMITS REC	#
Aroclor-1016	1120	934	83	12	30	31-120	
Aroclor-1260	1120	903	81	10	30	21-122	

Column to be used to flag recovery and RPD values

FORM III 8082A

FORM IV
PCBS METHOD BLANK SUMMARY

Lab Name: TestAmerica Canton Job No.: 240-81698-1

SDG No.:

Lab Sample ID: MB 240-285524/15-A

Matrix: Water Date Extracted: 06/30/2017 09:17

Lab File ID:(1) P11070527.D Lab File ID:(2) P11070527.D

Date Analyzed:(1) 07/05/2017 17:13 Date Analyzed:(2) 07/05/2017 17:13

Instrument ID:(1) A2HP11 Instrument ID:(2) A2HP11

GC Column:(1) CLP-2 (0.53m ID: 0.53(mm) GC Column:(2) CLP-1 (0.53m ID: 0.53(mm)

THIS METHOD BLANK APPLIES TO THE FOLLOWING SAMPLES:

CLIENT SAMPLE ID	LAB SAMPLE ID	DATE ANALYZED 1	DATE ANALYZED 2
WC-FDCON-062817	240-81698-4	07/05/2017 14:23	07/05/2017 14:23
WC-WGEO-062817	240-81698-6	07/05/2017 14:42	07/05/2017 14:42
	LCS 240-285524/16-A	07/05/2017 17:32	07/05/2017 17:32

FORM IV
PCBS METHOD BLANK SUMMARY

Lab Name: TestAmerica Canton Job No.: 240-81698-1

SDG No.:

Lab Sample ID: MB 240-285979/22-A

Matrix: Solid Date Extracted: 07/05/2017 13:32

Lab File ID:(1) P40707027.D Lab File ID:(2) P40707027.D

Date Analyzed:(1) 07/07/2017 13:18 Date Analyzed:(2) 07/07/2017 13:18

Instrument ID:(1) A2HP4 Instrument ID:(2) A2HP4

GC Column:(1) CLP-2 (0.53m ID: 0.53(mm) GC Column:(2) CLP-1 (0.53m ID: 0.53(mm)

THIS METHOD BLANK APPLIES TO THE FOLLOWING SAMPLES:

CLIENT SAMPLE ID	LAB SAMPLE ID	DATE ANALYZED 1	DATE ANALYZED 2
WC-FSOIL-062817	240-81698-3	07/07/2017 07:22	07/07/2017 07:22
WC-SGEO-062817	240-81698-5	07/07/2017 07:42	07/07/2017 07:42
WC-SGEO-062817 MS	240-81698-5 MS	07/07/2017 08:01	07/07/2017 08:01
WC-SGEO-062817 MSD	240-81698-5 MSD	07/07/2017 08:21	07/07/2017 08:21
	LCS 240-285979/23-A	07/07/2017 13:37	07/07/2017 13:37

FORM VIII
PCBS INTERNAL STANDARD AREA AND RETENTION TIME SUMMARY

Lab Name: TestAmerica Canton Job No.: 240-81698-1

SDG No.:

Sample No.: STD05 240-281427/31 Date Analyzed: 06/04/2017 19:51

Instrument ID: A2HP11 GC Column: CLP-1 (0.53mm) ID: 0.53(mm)

Lab File ID (Standard): P11060431.D Heated Purge: (Y/N) N

Calibration ID: 40237

		BNB					
		AREA #	RT #	AREA #	RT #	AREA #	RT #
INITIAL CALIBRATION MID-POINT		75771638	3.14				
UPPER LIMIT		151543276	3.64				
LOWER LIMIT		37885819	2.64				
LAB SAMPLE ID	CLIENT SAMPLE ID						
ICV 240-281427/34		77059896	3.14				
ICV 240-281427/35		72924027	3.14				
ICV 240-281427/36		67585088	3.13				
ICV 240-281427/37		81192025	3.14				
ICV 240-281427/38		75546555	3.14				
ICV 240-281427/39		75524642	3.14				
ICV 240-281427/40		73114264	3.13				
ICV 240-281427/41		68858949	3.13				

BNB = 1-Bromo-2-nitrobenzene

Area Limit = 50%-200% of internal standard area
RT Limit = ± 0.5 minutes of internal standard RT

Column used to flag values outside QC limits

FORM VIII 8082A

FORM VIII
PCBS INTERNAL STANDARD AREA AND RETENTION TIME SUMMARY

Lab Name: TestAmerica Canton Job No.: 240-81698-1

SDG No.:

Sample No.: STD05 240-281427/31 Date Analyzed: 06/04/2017 19:51

Instrument ID: A2HP11 GC Column: CLP-2 (0.53mm) ID: 0.53(mm)

Lab File ID (Standard): P11060431.D Heated Purge: (Y/N) N

Calibration ID: 40238

		BNB					
		AREA #	RT #	AREA #	RT #	AREA #	RT #
INITIAL CALIBRATION MID-POINT		145300398	3.96				
UPPER LIMIT		290600796	4.46				
LOWER LIMIT		72650199	3.46				
LAB SAMPLE ID	CLIENT SAMPLE ID						
ICV 240-281427/34		148390663	3.96				
ICV 240-281427/35		141941597	3.96				
ICV 240-281427/36		131903186	3.96				
ICV 240-281427/37		156810335	3.96				
ICV 240-281427/38		146505299	3.96				
ICV 240-281427/39		147204311	3.96				
ICV 240-281427/40		142606205	3.96				
ICV 240-281427/41		134951122	3.96				
CCV 240-285854/3 CCVIS		137224816	3.95				

BNB = 1-Bromo-2-nitrobenzene

Area Limit = 50%-200% of internal standard area
RT Limit = ± 0.5 minutes of internal standard RT

Column used to flag values outside QC limits

FORM VIII 8082A

FORM VIII
PCBS INTERNAL STANDARD AREA AND RETENTION TIME SUMMARY

Lab Name: TestAmerica Canton Job No.: 240-81698-1

SDG No.:

Sample No.: CCV 240-285854/3 Date Analyzed: 07/05/2017 09:43

Instrument ID: A2HP11 GC Column: CLP-2 (0.53mm) ID: 0.53(mm)

Lab File ID (Standard): P11070503.D Heated Purge: (Y/N) N

Calibration ID: 40238

		BNB					
		AREA #	RT #	AREA #	RT #	AREA #	RT #
12/24 HOUR STD		137224816	3.95				
UPPER LIMIT		274449632	4.45				
LOWER LIMIT		68612408	3.45				
LAB SAMPLE ID	CLIENT SAMPLE ID						
CCV 240-285854/4		142073431	3.94				
CCV 240-285854/6		121486282	3.94				
CCV 240-285854/7		138316220	3.95				
CCV 240-285854/9		132694810	3.94				
240-81698-4	WC-FDCON-062817	154650960	3.95				
240-81698-6	WC-WGEO-062817	143669954	3.95				
MB 240-285524/15-A		139470251	3.94				
LCS 240-285524/16-A		156442045	3.94				

BNB = 1-Bromo-2-nitrobenzene
BNB = 1-Bromo-2-nitrobenzene

Area Limit = 50%-200% of internal standard area
RT Limit = ± 0.5 minutes of internal standard RT

Column used to flag values outside QC limits

FORM VIII 8082A

FORM VIII
PCBS INTERNAL STANDARD AREA AND RETENTION TIME SUMMARY

Lab Name: TestAmerica Canton Job No.: 240-81698-1

SDG No.:

Sample No.: STD05 240-285960/31 Date Analyzed: 07/05/2017 23:45

Instrument ID: A2HP4 GC Column: CLP-1 (0.53mm) ID: 0.53(mm)

Lab File ID (Standard): P40705031.D Heated Purge: (Y/N) N

Calibration ID: 40563

		BNB					
		AREA #	RT #	AREA #	RT #	AREA #	RT #
INITIAL CALIBRATION MID-POINT		68464316	1.65				
UPPER LIMIT		136928632	2.15				
LOWER LIMIT		34232158	1.15				
LAB SAMPLE ID	CLIENT SAMPLE ID						
ICV 240-285960/34		76558217	1.64				
ICV 240-285960/35		73534122	1.64				
ICV 240-285960/36		79191242	1.64				
ICV 240-285960/37		68382730	1.64				
ICV 240-285960/38		72750609	1.64				
ICV 240-285960/39		70199363	1.64				
ICV 240-285960/40		72953264	1.64				
ICV 240-285960/41		73047750	1.64				
CCV 240-286194/3 CCVIS		67963954	1.65				

BNB = 1-Bromo-2-nitrobenzene

Area Limit = 50%-200% of internal standard area
RT Limit = ± 0.5 minutes of internal standard RT

Column used to flag values outside QC limits

FORM VIII 8082A

FORM VIII
PCBS INTERNAL STANDARD AREA AND RETENTION TIME SUMMARY

Lab Name: TestAmerica Canton Job No.: 240-81698-1

SDG No.:

Sample No.: STD05 240-285960/31 Date Analyzed: 07/05/2017 23:45

Instrument ID: A2HP4 GC Column: CLP-2 (0.53mm) ID: 0.53(mm)

Lab File ID (Standard): P40705031.D Heated Purge: (Y/N) N

Calibration ID: 40564

		BNB					
		AREA #	RT #	AREA #	RT #	AREA #	RT #
INITIAL CALIBRATION MID-POINT		65170493	1.87				
UPPER LIMIT		130340986	2.37				
LOWER LIMIT		32585247	1.37				
LAB SAMPLE ID	CLIENT SAMPLE ID						
ICV 240-285960/34		73638669	1.86				
ICV 240-285960/35		70146659	1.86				
ICV 240-285960/36		76029549	1.86				
ICV 240-285960/37		65282394	1.86				
ICV 240-285960/38		69306768	1.86				
ICV 240-285960/39		66317327	1.86				
ICV 240-285960/40		69110029	1.86				
ICV 240-285960/41		69208144	1.87				

BNB = 1-Bromo-2-nitrobenzene

Area Limit = 50%-200% of internal standard area
RT Limit = ± 0.5 minutes of internal standard RT

Column used to flag values outside QC limits

FORM VIII 8082A

FORM VIII
PCBS INTERNAL STANDARD AREA AND RETENTION TIME SUMMARY

Lab Name: TestAmerica Canton Job No.: 240-81698-1

SDG No.:

Sample No.: CCV 240-286194/3 Date Analyzed: 07/07/2017 05:24

Instrument ID: A2HP4 GC Column: CLP-1 (0.53mm) ID: 0.53(mm)

Lab File ID (Standard): P40707003.D Heated Purge: (Y/N) N

Calibration ID: 40563

		BNB					
		AREA #	RT #	AREA #	RT #	AREA #	RT #
12/24 HOUR STD		67963954	1.65				
UPPER LIMIT		135927908	2.15				
LOWER LIMIT		33981977	1.15				
LAB SAMPLE ID	CLIENT SAMPLE ID						
CCV 240-286194/4		67427295	1.65				
CCV 240-286194/5		70021151	1.65				
CCV 240-286194/6		67413357	1.65				
CCV 240-286194/7		67198931	1.65				
240-81698-3	WC-FSOIL-062817	64771372	1.65				
240-81698-5	WC-SGEO-062817	61698706	1.65				
240-81698-5 MS	WC-SGEO-062817 MS	64965589	1.65				
240-81698-5 MSD	WC-SGEO-062817 MSD	64794754	1.65				
MB 240-285979/22-A		65233923	1.65				
LCS 240-285979/23-A		68529129	1.65				

BNB = 1-Bromo-2-nitrobenzene
BNB = 1-Bromo-2-nitrobenzene

Area Limit = 50%-200% of internal standard area
RT Limit = ± 0.5 minutes of internal standard RT

Column used to flag values outside QC limits

FORM VIII 8082A

FORM X
IDENTIFICATION SUMMARY

Lab Name: TestAmerica Canton Job No.: 240-81698-1

SDG No.:

Client Sample ID: WC-SGEO-062817 Lab Sample ID: 240-81698-5

Instrument ID (1): A2HP4 Instrument ID (2): A2HP4

Date Analyzed (1): 07/07/2017 07:42 Date Analyzed (2): 07/07/2017 07:42

GC Column (1): CLP-2 (0.53mm ID: 0.53(mm) GC Column (2): CLP-1 (0.53mm ID: 0.53(mm)

ANALYTE	COL	PEAK	RT	RT WINDOW		CONCENTRATION		RPD
				FROM	TO	PEAK	MEAN	
Aroclor-1248	1	1	4.91	4.89	4.93	515	450	24.4
		2	5.62	5.59	5.63	678		
		3	6.48	6.46	6.50	380		
		4	7.00	6.97	7.01	481		
		5	7.68	7.65	7.69	207		
	2	1	3.90	3.88	3.92	501	350	
		2	5.48	5.45	5.49	369		
		3	6.09	6.07	6.11	336		
		4	6.38	6.36	6.40	361		
		5	6.87	6.84	6.88	203		

FORM X
IDENTIFICATION SUMMARY

Lab Name: TestAmerica Canton Job No.: 240-81698-1

SDG No.:

Client Sample ID: WC-SGEO-062817 MS Lab Sample ID: 240-81698-5 MS

Instrument ID (1): A2HP4 Instrument ID (2): A2HP4

Date Analyzed (1): 07/07/2017 08:01 Date Analyzed (2): 07/07/2017 08:01

GC Column (1): CLP-2 (0.53mm ID: 0.53(mm) GC Column (2): CLP-1 (0.53mm ID: 0.53(mm)

ANALYTE	COL	PEAK	RT	RT WINDOW		CONCENTRATION		RPD
				FROM	TO	PEAK	MEAN	
Aroclor-1016	1	1	4.23	4.21	4.25	1070	1250	17.0
		2	4.92	4.90	4.93	1180		
		3	5.62	5.60	5.64	1360		
		4	5.82	5.80	5.84	1280		
		5	6.49	6.46	6.50	1360		
	2	1	3.30	3.28	3.32	823	1060	
		2	3.91	3.89	3.93	1110		
		3	4.66	4.64	4.67	1020		
		4	4.86	4.84	4.88	1080		
		5	5.24	5.22	5.26	1250		
Aroclor-1260	1	1	7.86	7.84	7.88	1130	1100	9.5
		2	8.06	8.04	8.08	1060		
		3	8.38	8.36	8.40	1120		
		4	8.93	8.91	8.95	1070		
		5	9.23	9.21	9.24	1090		
	2	1	7.08	7.06	7.09	956	996	
		2	7.37	7.36	7.39	1030		
		3	7.65	7.63	7.67	1040		
		4	8.28	8.26	8.30	929		
		5	8.53	8.51	8.55	1020		

FORM X
IDENTIFICATION SUMMARY

Lab Name: TestAmerica Canton Job No.: 240-81698-1

SDG No.:

Client Sample ID: WC-SGEO-062817 MSD Lab Sample ID: 240-81698-5 MSD

Instrument ID (1): A2HP4 Instrument ID (2): A2HP4

Date Analyzed (1): 07/07/2017 08:21 Date Analyzed (2): 07/07/2017 08:21

GC Column (1): CLP-2 (0.53mm ID: 0.53(mm) GC Column (2): CLP-1 (0.53mm ID: 0.53(mm)

ANALYTE	COL	PEAK	RT	RT WINDOW		CONCENTRATION		RPD
				FROM	TO	PEAK	MEAN	
Aroclor-1016	1	1	4.23	4.21	4.25	939	1070	13.2
		2	4.91	4.90	4.93	1020		
		3	5.62	5.60	5.64	1130		
		4	5.82	5.80	5.84	1100		
		5	6.48	6.46	6.50	1140		
	2	1	3.30	3.28	3.32	809	934	
		2	3.91	3.89	3.93	948		
		3	4.66	4.64	4.67	917		
		4	4.86	4.84	4.88	879		
		5	5.23	5.22	5.26	1120		
Aroclor-1260	1	1	7.86	7.84	7.88	1040	994	9.7
		2	8.06	8.04	8.08	970		
		3	8.38	8.36	8.40	1030		
		4	8.92	8.91	8.95	962		
		5	9.22	9.21	9.24	977		
	2	1	7.07	7.06	7.09	867	903	
		2	7.37	7.36	7.39	918		
		3	7.65	7.63	7.67	944		
		4	8.28	8.26	8.30	867		
		5	8.52	8.51	8.55	917		

FORM X
IDENTIFICATION SUMMARY

Lab Name: TestAmerica Canton Job No.: 240-81698-1

SDG No.:

Client Sample ID: WC-WGEO-062817 Lab Sample ID: 240-81698-6

Instrument ID (1): A2HP11 Instrument ID (2): A2HP11

Date Analyzed (1): 07/05/2017 14:42 Date Analyzed (2): 07/05/2017 14:42

GC Column (1): CLP-2 (0.53mm ID: 0.53(mm) GC Column (2): CLP-1 (0.53mm ID: 0.53(mm)

ANALYTE	COL	PEAK	RT	RT WINDOW		CONCENTRATION		RPD
				FROM	TO	PEAK	MEAN	
Aroclor-1248	1	2	7.59	7.56	7.60	1.18	1.4	49.5
		3	7.91	7.89	7.93	1.48		
		4	8.42	8.40	8.44	1.36		
		5	9.19	9.17	9.21	1.71		
	2	3	7.29	7.28	7.32	0.845	0.86	
		4	7.55	7.54	7.58	1.11		
		5	8.02	8.01	8.04	0.632		

FORM X
IDENTIFICATION SUMMARY

Lab Name: TestAmerica Canton Job No.: 240-81698-1

SDG No.:

Client Sample ID: Lab Sample ID: LCS 240-285524/16-A

Instrument ID (1): A2HP11 Instrument ID (2): A2HP11

Date Analyzed (1): 07/05/2017 17:32 Date Analyzed (2): 07/05/2017 17:32

GC Column (1): CLP-2 (0.53mm ID: 0.53(mm) GC Column (2): CLP-1 (0.53mm ID: 0.53(mm)

ANALYTE	COL	PEAK	RT	RT WINDOW		CONCENTRATION		RPD
				FROM	TO	PEAK	MEAN	
Aroclor-1016	1	1	6.01	5.99	6.03	1.18	1.19	7.3
		2	6.56	6.54	6.58	0.974		
		3	7.15	7.13	7.17	1.26		
		4	7.32	7.30	7.34	1.23		
		5	7.91	7.89	7.92	1.28		
	2	1	5.05	5.03	5.07	1.12	1.10	
		2	5.51	5.50	5.53	1.04		
		3	6.10	6.08	6.12	0.991		
		4	6.27	6.25	6.29	1.06		
		5	6.78	6.76	6.80	1.30		
Aroclor-1260	1	1	9.42	9.40	9.44	1.48	1.52	0.9
		2	9.67	9.65	9.69	1.51		
		3	10.08	10.06	10.10	1.61		
		4	10.82	10.80	10.84	1.50		
		5	11.20	11.18	11.22	1.51		
	2	1	8.24	8.22	8.26	1.47	1.54	
		2	8.57	8.55	8.59	1.54		
		3	8.88	8.87	8.90	1.63		
		4	9.66	9.64	9.68	1.51		
		5	9.98	9.96	10.00	1.54		

FORM X
IDENTIFICATION SUMMARY

Lab Name: TestAmerica Canton Job No.: 240-81698-1

SDG No.:

Client Sample ID: Lab Sample ID: LCS 240-285979/23-A

Instrument ID (1): A2HP4 Instrument ID (2): A2HP4

Date Analyzed (1): 07/07/2017 13:37 Date Analyzed (2): 07/07/2017 13:37

GC Column (1): CLP-2 (0.53mm ID: 0.53(mm) GC Column (2): CLP-1 (0.53mm ID: 0.53(mm)

ANALYTE	COL	PEAK	RT	RT WINDOW		CONCENTRATION		RPD
				FROM	TO	PEAK	MEAN	
Aroclor-1016	1	1	4.23	4.21	4.25	544	589	10.8
		2	4.92	4.90	4.93	575		
		3	5.62	5.60	5.64	611		
		4	5.82	5.80	5.84	607		
		5	6.48	6.46	6.50	609		
	2	1	3.30	3.28	3.32	462	529	
		2	3.91	3.89	3.93	539		
		3	4.66	4.64	4.67	448		
		4	4.86	4.84	4.88	574		
		5	5.24	5.22	5.26	620		
Aroclor-1260	1	1	7.86	7.84	7.88	620	613	0.4
		2	8.06	8.04	8.08	612		
		3	8.38	8.36	8.40	644		
		4	8.93	8.91	8.95	598		
		5	9.23	9.21	9.24	589		
	2	1	7.08	7.06	7.09	601	610	
		2	7.37	7.36	7.39	674		
		3	7.65	7.63	7.67	631		
		4	8.28	8.26	8.30	565		
		5	8.53	8.51	8.55	581		

FORM I
PCBS ORGANICS ANALYSIS DATA SHEET

Lab Name: TestAmerica Canton
Job No.: 240-81698-1
SDG No.:
Client Sample ID: WC-FSOIL-062817
Lab Sample ID: 240-81698-3
Matrix: Solid
Lab File ID: P40707009.D
Analysis Method: 8082A
Date Collected: 06/28/2017 08:40
Extraction Method: 3540C
Date Extracted: 07/05/2017 13:32
Sample wt/vol: 10.16(g)
Date Analyzed: 07/07/2017 07:22
Con. Extract Vol.: 10(mL)
Dilution Factor: 1
Injection Volume: 1(uL)
GC Column: CLP-1 (0.53mm) ID: 0.53(mm)
% Moisture: 15.3
GPC Cleanup:(Y/N) N
Analysis Batch No.: 286194
Units: ug/Kg

CAS NO.	COMPOUND NAME	RESULT	Q	RL	MDL
12674-11-2	Aroclor-1016	28	U	58	28
11104-28-2	Aroclor-1221	27	U	58	27
11141-16-5	Aroclor-1232	19	U	58	19
53469-21-9	Aroclor-1242	23	U	58	23
12672-29-6	Aroclor-1248	20	U	58	20
11097-69-1	Aroclor-1254	16	U	58	16
11096-82-5	Aroclor-1260	21	U	58	21

CAS NO.	SURROGATE	%REC	Q	LIMITS
877-09-8	Tetrachloro-m-xylene	71		14-128
2051-24-3	DCB Decachlorobiphenyl	78		10-132

FORM I
PCBS ORGANICS ANALYSIS DATA SHEET

Lab Name: TestAmerica Canton | Job No.: 240-81698-1

SDG No.:

Client Sample ID: WC-FDCON-062817 | Lab Sample ID: 240-81698-4

Matrix: Water | Lab File ID: P11070518.D

Analysis Method: 8082A | Date Collected: 06/28/2017 08:55

Extraction Method: 3520C | Date Extracted: 06/30/2017 09:17

Sample wt/vol: 1040(mL) | Date Analyzed: 07/05/2017 14:23

Con. Extract Vol.: 2(mL) | Dilution Factor: 1

Injection Volume: 1(uL) | GC Column: CLP-2 (0.53mm) ID: 0.53(mm)

% Moisture: | GPC Cleanup:(Y/N) N

Analysis Batch No.: 285854 | Units: ug/L

CAS NO.	COMPOUND NAME	RESULT	Q	RL	MDL
12674-11-2	Aroclor-1016	0.048	U	0.096	0.048
11104-28-2	Aroclor-1221	0.087	U	0.096	0.087
11141-16-5	Aroclor-1232	0.067	U	0.096	0.067
53469-21-9	Aroclor-1242	0.058	U	0.096	0.058
12672-29-6	Aroclor-1248	0.048	U	0.096	0.048
11097-69-1	Aroclor-1254	0.029	U	0.096	0.029
11096-82-5	Aroclor-1260	0.038	U	0.096	0.038

CAS NO.	SURROGATE	%REC	Q	LIMITS
877-09-8	Tetrachloro-m-xylene	43		21-120
2051-24-3	DCB Decachlorobiphenyl	55		10-120

FORM I
PCBS ORGANICS ANALYSIS DATA SHEET

Lab Name: TestAmerica Canton | Job No.: 240-81698-1

SDG No.:

Client Sample ID: WC-SGEO-062817 | Lab Sample ID: 240-81698-5

Matrix: Solid | Lab File ID: P40707010.D

Analysis Method: 8082A | Date Collected: 06/28/2017 08:15

Extraction Method: 3540C | Date Extracted: 07/05/2017 13:32

Sample wt/vol: 9.94(g) | Date Analyzed: 07/07/2017 07:42

Con. Extract Vol.: 10(mL) | Dilution Factor: 1

Injection Volume: 1(uL) | GC Column: CLP-1 (0.53mm) ID: 0.53(mm)

% Moisture: 12.0 | GPC Cleanup:(Y/N) N

Analysis Batch No.: 286194 | Units: ug/Kg

CAS NO.	COMPOUND NAME	RESULT	Q	RL	MDL
12674-11-2	Aroclor-1016	27	U	57	27
11104-28-2	Aroclor-1221	26	U	57	26
11141-16-5	Aroclor-1232	18	U	57	18
53469-21-9	Aroclor-1242	23	U	57	23
12672-29-6	Aroclor-1248	350		57	19
11097-69-1	Aroclor-1254	16	U	57	16
11096-82-5	Aroclor-1260	21	U	57	21

CAS NO.	SURROGATE	%REC	Q	LIMITS
877-09-8	Tetrachloro-m-xylene	86		14-128
2051-24-3	DCB Decachlorobiphenyl	91		10-132

FORM I
PCBS ORGANICS ANALYSIS DATA SHEET

Lab Name: TestAmerica Canton
Job No.: 240-81698-1
SDG No.:
Client Sample ID: WC-WGEO-062817
Lab Sample ID: 240-81698-6
Matrix: Water
Lab File ID: P11070519.D
Analysis Method: 8082A
Date Collected: 06/28/2017 08:25
Extraction Method: 3520C
Date Extracted: 06/30/2017 09:17
Sample wt/vol: 1020(mL)
Date Analyzed: 07/05/2017 14:42
Con. Extract Vol.: 2(mL)
Dilution Factor: 1
Injection Volume: 1(uL)
GC Column: CLP-1 (0.53mm) ID: 0.53(mm)
% Moisture:
GPC Cleanup:(Y/N) N
Analysis Batch No.: 285854
Units: ug/L

CAS NO.	COMPOUND NAME	RESULT	Q	RL	MDL
12672-29-6	Aroclor-1248	0.86	p	0.098	0.049

CAS NO.	SURROGATE	%REC	Q	LIMITS
877-09-8	Tetrachloro-m-xylene	49		21-120
2051-24-3	DCB Decachlorobiphenyl	27		10-120

FORM I
PCBS ORGANICS ANALYSIS DATA SHEET

Lab Name: TestAmerica Canton | Job No.: 240-81698-1

SDG No.:

Client Sample ID: WC-WGEO-062817 | Lab Sample ID: 240-81698-6

Matrix: Water | Lab File ID: P11070519.D

Analysis Method: 8082A | Date Collected: 06/28/2017 08:25

Extraction Method: 3520C | Date Extracted: 06/30/2017 09:17

Sample wt/vol: 1020(mL) | Date Analyzed: 07/05/2017 14:42

Con. Extract Vol.: 2(mL) | Dilution Factor: 1

Injection Volume: 1(uL) | GC Column: CLP-2 (0.53mm) ID: 0.53(mm)

% Moisture: | GPC Cleanup:(Y/N) N

Analysis Batch No.: 285854 | Units: ug/L

CAS NO.	COMPOUND NAME	RESULT	Q	RL	MDL
12674-11-2	Aroclor-1016	0.049	U	0.098	0.049
11104-28-2	Aroclor-1221	0.088	U	0.098	0.088
11141-16-5	Aroclor-1232	0.069	U	0.098	0.069
53469-21-9	Aroclor-1242	0.059	U	0.098	0.059
11097-69-1	Aroclor-1254	0.029	U	0.098	0.029
11096-82-5	Aroclor-1260	0.039	U	0.098	0.039

CAS NO.	SURROGATE	%REC	Q	LIMITS
877-09-8	Tetrachloro-m-xylene	46		21-120
2051-24-3	DCB Decachlorobiphenyl	27		10-120

FORM VI
PCBS BY INTERNAL STANDARD - INITIAL CALIBRATION DATA
CURVE EVALUATION

Lab Name: TestAmerica Canton Job No.: 240-81698-1 Analy Batch No.: 281427

SDG No.:

Instrument ID: A2HP11 GC Column: CLP-1 (0.53 ID: 0.53(mm) Heated Purge: (Y/N) N

Calibration Start Date: 06/04/2017 11:28 Calibration End Date: 06/04/2017 13:02 Calibration ID: 40213

Calibration Files:

LEVEL:	LAB SAMPLE ID:	LAB FILE ID:
Level 1	STD005 240-281427/4	P11060404.D
Level 2	STD01 240-281427/5	P11060405.D
Level 3	STD02 240-281427/6	P11060406.D
Level 4	STD05 240-281427/7	P11060407.D
Level 5	STD1 240-281427/8	P11060408.D
Level 6	std1.5 1232 1262	P11060409.D

ANALYTE	RRF					CURVE TYPE	COEFFICIENT			#	MIN RRF	%RSD	#	MAX %RSD	R^2 OR COD	#	MIN R^2 OR COD
	LVL 1 LVL 6	LVL 2	LVL 3	LVL 4	LVL 5		B	M1	M2								
PCB-1232 Peak 1	0.0241 0.0183	0.0240	0.0213	0.0188	0.0182	Lin1	0.0004	0.0180							0.9990		0.9900
PCB-1232 Peak 2	0.0174 0.0134	0.0173	0.0157	0.0138	0.0133	Lin1	0.0003	0.0132							0.9990		0.9900
PCB-1232 Peak 3	0.0363 0.0320	0.0369	0.0340	0.0312	0.0314	Lin1	0.0003	0.0314							0.9990		0.9900
PCB-1232 Peak 4	0.0163 0.0135	0.0171	0.0154	0.0136	0.0133	Lin1	0.0002	0.0133							0.9990		0.9900
PCB-1232 Peak 5	0.0153 0.0125	0.0160	0.0145	0.0128	0.0124	Lin1	0.0002	0.0123							0.9990		0.9900
PCB-1262 Peak 1	0.0395 0.0345	0.0398	0.0364	0.0333	0.0336	Lin1	0.0004	0.0337							0.9990		0.9900
PCB-1262 Peak 2	0.0546 0.0511	0.0560	0.0526	0.0491	0.0499	Lin1	0.0003	0.0502							0.9990		0.9900
PCB-1262 Peak 3	0.0691 0.0664	0.0733	0.0672	0.0640	0.0640	Lin1	0.0004	0.0650							0.9990		0.9900
PCB-1262 Peak 4	0.1399 0.1384	0.1483	0.1352	0.1313	0.1332	Lin1	0.0004	0.1352							0.9990		0.9900
PCB-1262 Peak 5	0.0591 0.0565	0.0615	0.0570	0.0537	0.0538	Lin1	0.0003	0.0549							0.9990		0.9900

Note: The M1 coefficient is the same as Ave RRF for an Ave curve type.

FORM VI
PCBS BY INTERNAL STANDARD - INITIAL CALIBRATION DATA
RESPONSE AND CONCENTRATION

Lab Name: TestAmerica Canton Job No.: 240-81698-1 Analy Batch No.: 281427

SDG No.:

Instrument ID: A2HP11 GC Column: CLP-1 (0.53 ID: 0.53(mm) Heated Purge: (Y/N) N

Calibration Start Date: 06/04/2017 11:28 Calibration End Date: 06/04/2017 13:02 Calibration ID: 40213

Calibration Files:

LEVEL:	LAB SAMPLE ID:	LAB FILE ID:
Level 1	STD005 240-281427/4	P11060404.D
Level 2	STD01 240-281427/5	P11060405.D
Level 3	STD02 240-281427/6	P11060406.D
Level 4	STD05 240-281427/7	P11060407.D
Level 5	STD1 240-281427/8	P11060408.D
Level 6	std1.5 1232 1262	P11060409.D

ANALYTE	IS REF	CURVE TYPE	RESPONSE					CONCENTRATION (NG/UL)				
			LVL 1 LVL 6	LVL 2	LVL 3	LVL 4	LVL 5	LVL 1 LVL 6	LVL 2	LVL 3	LVL 4	LVL 5
PCB-1232 Peak 1	BNB	Lin1	1637332 36775310	2941279	5894772	13751681	26663216	0.0500 1.50	0.100	0.200	0.500	1.00
PCB-1232 Peak 2	BNB	Lin1	1179426 26923898	2119871	4343878	10122224	19490808	0.0500 1.50	0.100	0.200	0.500	1.00
PCB-1232 Peak 3	BNB	Lin1	2461705 64198406	4526217	9422450	22878687	45906271	0.0500 1.50	0.100	0.200	0.500	1.00
PCB-1232 Peak 4	BNB	Lin1	1108207 27090751	2098062	4270048	9968967	19494037	0.0500 1.50	0.100	0.200	0.500	1.00
PCB-1232 Peak 5	BNB	Lin1	1038839 25084526	1962327	4010120	9350129	18114671	0.0500 1.50	0.100	0.200	0.500	1.00
PCB-1262 Peak 1	BNB	Lin1	2678779 69353637	4873630	10093766	24383741	49117962	0.0500 1.50	0.100	0.200	0.500	1.00
PCB-1262 Peak 2	BNB	Lin1	3703803 102686082	6859885	14575515	35988987	72971174	0.0500 1.50	0.100	0.200	0.500	1.00
PCB-1262 Peak 3	BNB	Lin1	4691582 133367400	8982232	18635399	46892753	93587139	0.0500 1.50	0.100	0.200	0.500	1.00
PCB-1262 Peak 4	BNB	Lin1	9497129 277828970	18183601	37477016	96210520	194751013	0.0500 1.50	0.100	0.200	0.500	1.00
PCB-1262 Peak 5	BNB	Lin1	4011866 113366452	7541382	15805284	39353320	78660793	0.0500 1.50	0.100	0.200	0.500	1.00

Curve Type Legend:
Lin1 = Linear 1/conc ISTD

FORM VI
PCBS BY INTERNAL STANDARD - INITIAL CALIBRATION DATA
CURVE EVALUATION

Lab Name: TestAmerica Canton Job No.: 240-81698-1 Analy Batch No.: 281427

SDG No.:

Instrument ID: A2HP11 GC Column: CLP-2 (0.53 ID: 0.53(mm) Heated Purge: (Y/N) N

Calibration Start Date: 06/04/2017 11:28 Calibration End Date: 06/04/2017 13:02 Calibration ID: 40214

Calibration Files:

LEVEL:	LAB SAMPLE ID:	LAB FILE ID:
Level 1	STD005 240-281427/4	P11060404.D
Level 2	STD01 240-281427/5	P11060405.D
Level 3	STD02 240-281427/6	P11060406.D
Level 4	STD05 240-281427/7	P11060407.D
Level 5	STD1 240-281427/8	P11060408.D
Level 6	std1.5 1232 1262	P11060409.D

ANALYTE	RRF					CURVE TYPE	COEFFICIENT			#	MIN RRF	%RSD	#	MAX %RSD	R^2 OR COD	#	MIN R^2 OR COD
	LVL 1 LVL 6	LVL 2	LVL 3	LVL 4	LVL 5		B	M1	M2								
PCB-1232 Peak 1	0.0228 0.0192	0.0233	0.0218	0.0198	0.0193	Lin1	0.0003	0.0191							0.9990		0.9900
PCB-1232 Peak 2	0.0189 0.0154	0.0194	0.0178	0.0161	0.0156	Lin1	0.0003	0.0154							0.9990		0.9900
PCB-1232 Peak 3	0.0356 0.0331	0.0362	0.0348	0.0325	0.0334	Lin1	0.0002	0.0330							1.0000		0.9900
PCB-1232 Peak 4	0.0148 0.0143	0.0160	0.0150	0.0137	0.0145	Lin1	0.0001	0.0142							0.9990		0.9900
PCB-1232 Peak 5	0.0150 0.0101	0.0154	0.0130	0.0107	0.0103	Lin1	0.0004	0.0100							0.9960		0.9900
PCB-1262 Peak 1	0.0490 0.0436	0.0505	0.0475	0.0440	0.0431	Lin1	0.0005	0.0432							0.9990		0.9900
PCB-1262 Peak 2	0.0757 0.0672	0.0784	0.0722	0.0667	0.0666	Lin1	0.0007	0.0664							0.9990		0.9900
PCB-1262 Peak 3	0.0666 0.0592	0.0696	0.0647	0.0605	0.0583	Lin1	0.0007	0.0586							0.9990		0.9900
PCB-1262 Peak 4	0.1379 0.1300	0.1460	0.1383	0.1291	0.1270	Lin1	0.0010	0.1283							0.9990		0.9900
PCB-1262 Peak 5	0.1011 0.0933	0.1061	0.0998	0.0932	0.0915	Lin1	0.0008	0.0921							0.9990		0.9900

Note: The M1 coefficient is the same as Ave RRF for an Ave curve type.

FORM VI
PCBS BY INTERNAL STANDARD - INITIAL CALIBRATION DATA
RESPONSE AND CONCENTRATION

Lab Name: TestAmerica Canton Job No.: 240-81698-1 Analy Batch No.: 281427

SDG No.:

Instrument ID: A2HP11 GC Column: CLP-2 (0.53 ID: 0.53(mm) Heated Purge: (Y/N) N

Calibration Start Date: 06/04/2017 11:28 Calibration End Date: 06/04/2017 13:02 Calibration ID: 40214

Calibration Files:

LEVEL:	LAB SAMPLE ID:	LAB FILE ID:
Level 1	STD005 240-281427/4	P11060404.D
Level 2	STD01 240-281427/5	P11060405.D
Level 3	STD02 240-281427/6	P11060406.D
Level 4	STD05 240-281427/7	P11060407.D
Level 5	STD1 240-281427/8	P11060408.D
Level 6	std1.5 1232 1262	P11060409.D

ANALYTE	IS REF	CURVE TYPE	RESPONSE					CONCENTRATION (NG/UL)				
			LVL 1 LVL 6	LVL 2	LVL 3	LVL 4	LVL 5	LVL 1 LVL 6	LVL 2	LVL 3	LVL 4	LVL 5
PCB-1232 Peak 1	BNB	Lin1	3034927 75115197	5634667	11804053	28144486	54615562	0.0500 1.50	0.100	0.200	0.500	1.00
PCB-1232 Peak 2	BNB	Lin1	2507764 60294630	4685306	9633344	22858387	44278213	0.0500 1.50	0.100	0.200	0.500	1.00
PCB-1232 Peak 3	BNB	Lin1	4729825 129517106	8762801	18842252	46168686	94473016	0.0500 1.50	0.100	0.200	0.500	1.00
PCB-1232 Peak 4	BNB	Lin1	1972433 55898828	3861409	8107525	19478577	40954482	0.0500 1.50	0.100	0.200	0.500	1.00
PCB-1232 Peak 5	BNB	Lin1	2000809 39711726	3736073	7037974	15196740	29256025	0.0500 1.50	0.100	0.200	0.500	1.00
PCB-1262 Peak 1	BNB	Lin1	6516600 170648562	12225721	25702805	62538987	122074477	0.0500 1.50	0.100	0.200	0.500	1.00
PCB-1262 Peak 2	BNB	Lin1	10068739 262898463	18988067	39055154	94814491	188512509	0.0500 1.50	0.100	0.200	0.500	1.00
PCB-1262 Peak 3	BNB	Lin1	8862080 231577940	16841784	35032367	85885679	165010665	0.0500 1.50	0.100	0.200	0.500	1.00
PCB-1262 Peak 4	BNB	Lin1	18339161 508761589	35355830	74847609	183437315	359451783	0.0500 1.50	0.100	0.200	0.500	1.00
PCB-1262 Peak 5	BNB	Lin1	13448565 365158899	25682805	53993118	132358758	258883753	0.0500 1.50	0.100	0.200	0.500	1.00

Curve Type Legend:
Lin1 = Linear 1/conc ISTD

FORM VI
PCBS BY INTERNAL STANDARD - INITIAL CALIBRATION DATA
CURVE EVALUATION

Lab Name: TestAmerica Canton Job No.: 240-81698-1 Analy Batch No.: 281427

SDG No.:

Instrument ID: A2HP11 GC Column: CLP-1 (0.53 ID: 0.53(mm) Heated Purge: (Y/N) N

Calibration Start Date: 06/04/2017 13:20 Calibration End Date: 06/04/2017 14:53 Calibration ID: 40219

Calibration Files:

LEVEL:	LAB SAMPLE ID:	LAB FILE ID:
Level 1	STD005 240-281427/10	P11060410.D
Level 2	STD01 240-281427/11	P11060411.D
Level 3	STD02 240-281427/12	P11060412.D
Level 4	STD05 240-281427/13	P11060413.D
Level 5	STD1 240-281427/14	P11060414.D
Level 6	std1.5 1242 1268	P11060415.D

ANALYTE	RRF					CURVE TYPE	COEFFICIENT			#	MIN RRF	%RSD	#	MAX %RSD	R^2 OR COD	#	MIN R^2 OR COD
	LVL 1 LVL 6	LVL 2	LVL 3	LVL 4	LVL 5		B	M1	M2								
PCB-1242 Peak 1	0.0227 0.0162	0.0208	0.0182	0.0169	0.0159	Lin1	0.0004	0.0158							0.9990		0.9900
PCB-1242 Peak 2	0.0380 0.0297	0.0367	0.0324	0.0306	0.0289	Lin1	0.0006	0.0291							0.9990		0.9900
PCB-1242 Peak 3	0.0823 0.0741	0.0799	0.0732	0.0730	0.0710	Lin1	0.0005	0.0723							0.9990		0.9900
PCB-1242 Peak 4	0.0382 0.0307	0.0359	0.0322	0.0309	0.0296	Lin1	0.0005	0.0299							0.9990		0.9900
PCB-1242 Peak 5	0.0370 0.0312	0.0374	0.0328	0.0315	0.0301	Lin1	0.0004	0.0305							0.9990		0.9900
PCB-1268 Peak 1	0.2123 0.2089	0.2182	0.1998	0.2029	0.1976	Lin1	0.0005	0.2036							0.9990		0.9900
PCB-1268 Peak 2	0.2076 0.2068	0.2147	0.2008	0.2031	0.1967	Lin1	0.0004	0.2024							0.9990		0.9900
PCB-1268 Peak 3	0.1838 0.1809	0.1888	0.1735	0.1763	0.1717	Lin1	0.0004	0.1766							0.9990		0.9900
PCB-1268 Peak 4	0.0803 0.0753	0.0813	0.0727	0.0732	0.0713	Lin1	0.0004	0.0732							0.9990		0.9900
PCB-1268 Peak 5	0.5877 0.5942	0.6195	0.5648	0.5723	0.5600	Lin1	0.0007	0.5783							0.9990		0.9900

Note: The M1 coefficient is the same as Ave RRF for an Ave curve type.

FORM VI
PCBS BY INTERNAL STANDARD - INITIAL CALIBRATION DATA
RESPONSE AND CONCENTRATION

Lab Name: TestAmerica Canton Job No.: 240-81698-1 Analy Batch No.: 281427

SDG No.:

Instrument ID: A2HP11 GC Column: CLP-1 (0.53 ID: 0.53(mm) Heated Purge: (Y/N) N

Calibration Start Date: 06/04/2017 13:20 Calibration End Date: 06/04/2017 14:53 Calibration ID: 40219

Calibration Files:

LEVEL:	LAB SAMPLE ID:	LAB FILE ID:
Level 1	STD005 240-281427/10	P11060410.D
Level 2	STD01 240-281427/11	P11060411.D
Level 3	STD02 240-281427/12	P11060412.D
Level 4	STD05 240-281427/13	P11060413.D
Level 5	STD1 240-281427/14	P11060414.D
Level 6	std1.5 1242 1268	P11060415.D

ANALYTE	IS REF	CURVE TYPE	RESPONSE					CONCENTRATION (NG/UL)				
			LVL 1 LVL 6	LVL 2	LVL 3	LVL 4	LVL 5	LVL 1 LVL 6	LVL 2	LVL 3	LVL 4	LVL 5
PCB-1242 Peak 1	BNB	Lin1	1681739 36502021	2820566	5525792	12853955	24076593	0.0500 1.50	0.100	0.200	0.500	1.00
PCB-1242 Peak 2	BNB	Lin1	2813126 67029847	4962045	9853431	23338418	43820779	0.0500 1.50	0.100	0.200	0.500	1.00
PCB-1242 Peak 3	BNB	Lin1	6098350 167203004	10817646	22246928	55586965	107544463	0.0500 1.50	0.100	0.200	0.500	1.00
PCB-1242 Peak 4	BNB	Lin1	2828427 69221586	4865203	9767579	23542203	44814159	0.0500 1.50	0.100	0.200	0.500	1.00
PCB-1242 Peak 5	BNB	Lin1	2742188 70468153	5058120	9968966	23972344	45539036	0.0500 1.50	0.100	0.200	0.500	1.00
PCB-1268 Peak 1	BNB	Lin1	15727578 471744380	29535457	60686661	154621978	299214646	0.0500 1.50	0.100	0.200	0.500	1.00
PCB-1268 Peak 2	BNB	Lin1	15373044 466930566	29063833	60993215	154775441	297766558	0.0500 1.50	0.100	0.200	0.500	1.00
PCB-1268 Peak 3	BNB	Lin1	13612325 408524452	25560345	52722685	134292931	259914511	0.0500 1.50	0.100	0.200	0.500	1.00
PCB-1268 Peak 4	BNB	Lin1	5946591 170006675	11002842	22099996	55759892	107993631	0.0500 1.50	0.100	0.200	0.500	1.00
PCB-1268 Peak 5	BNB	Lin1	43529093 1341620077	83862878	171590145	436052493	847957990	0.0500 1.50	0.100	0.200	0.500	1.00

Curve Type Legend:
Lin1 = Linear 1/conc ISTD

FORM VI
PCBS BY INTERNAL STANDARD - INITIAL CALIBRATION DATA
CURVE EVALUATION

Lab Name: TestAmerica Canton Job No.: 240-81698-1 Analy Batch No.: 281427

SDG No.:

Instrument ID: A2HP11 GC Column: CLP-2 (0.53 ID: 0.53(mm) Heated Purge: (Y/N) N

Calibration Start Date: 06/04/2017 13:20 Calibration End Date: 06/04/2017 14:53 Calibration ID: 40220

Calibration Files:

LEVEL:	LAB SAMPLE ID:	LAB FILE ID:
Level 1	STD005 240-281427/10	P11060410.D
Level 2	STD01 240-281427/11	P11060411.D
Level 3	STD02 240-281427/12	P11060412.D
Level 4	STD05 240-281427/13	P11060413.D
Level 5	STD1 240-281427/14	P11060414.D
Level 6	std1.5 1242 1268	P11060415.D

ANALYTE	RRF					CURVE TYPE	COEFFICIENT			#	MIN RRF	%RSD	#	MAX %RSD	R^2 OR COD	#	MIN R^2 OR COD
	LVL 1 LVL 6	LVL 2	LVL 3	LVL 4	LVL 5		B	M1	M2								
PCB-1242 Peak 1	0.0207 0.0173	0.0209	0.0188	0.0178	0.0168	Lin1	0.0003	0.0170							0.9990		0.9900
PCB-1242 Peak 2	0.0419 0.0323	0.0406	0.0364	0.0345	0.0321	Lin1	0.0007	0.0320							0.9990		0.9900
PCB-1242 Peak 3	0.0857 0.0743	0.0820	0.0795	0.0774	0.0733	Lin1	0.0008	0.0738							1.0000		0.9900
PCB-1242 Peak 4	0.0359 0.0321	0.0350	0.0346	0.0334	0.0317	Lin1	0.0003	0.0320							1.0000		0.9900
PCB-1242 Peak 5	0.0331 0.0249	0.0309	0.0276	0.0261	0.0248	Lin1	0.0005	0.0246							1.0000		0.9900
PCB-1268 Peak 1	0.2232 0.1985	0.2249	0.2035	0.1984	0.1902	Lin1	0.0019	0.1940							0.9990		0.9900
PCB-1268 Peak 2	0.2254 0.1980	0.2274	0.2066	0.2021	0.1901	Lin1	0.0022	0.1941							0.9990		0.9900
PCB-1268 Peak 3	0.1914 0.1724	0.1949	0.1769	0.1736	0.1654	Lin1	0.0016	0.1689							0.9990		0.9900
PCB-1268 Peak 4	0.0794 0.0711	0.0811	0.0731	0.0718	0.0684	Lin1	0.0007	0.0697							0.9990		0.9900
PCB-1268 Peak 5	0.5797 0.5475	0.5913	0.5347	0.5298	0.5156	Lin1	0.0029	0.5312							0.9990		0.9900

Note: The M1 coefficient is the same as Ave RRF for an Ave curve type.

FORM VI
PCBS BY INTERNAL STANDARD - INITIAL CALIBRATION DATA
RESPONSE AND CONCENTRATION

Lab Name: TestAmerica Canton Job No.: 240-81698-1 Analy Batch No.: 281427

SDG No.:

Instrument ID: A2HP11 GC Column: CLP-2 (0.53 ID: 0.53(mm) Heated Purge: (Y/N) N

Calibration Start Date: 06/04/2017 13:20 Calibration End Date: 06/04/2017 14:53 Calibration ID: 40220

Calibration Files:

LEVEL:	LAB SAMPLE ID:	LAB FILE ID:
Level 1	STD005 240-281427/10	P11060410.D
Level 2	STD01 240-281427/11	P11060411.D
Level 3	STD02 240-281427/12	P11060412.D
Level 4	STD05 240-281427/13	P11060413.D
Level 5	STD1 240-281427/14	P11060414.D
Level 6	std1.5 1242 1268	P11060415.D

ANALYTE	IS REF	CURVE TYPE	RESPONSE					CONCENTRATION (NG/UL)				
			LVL 1 LVL 6	LVL 2	LVL 3	LVL 4	LVL 5	LVL 1 LVL 6	LVL 2	LVL 3	LVL 4	LVL 5
PCB-1242 Peak 1	BNB	Lin1	2966033 75153916	5520990	11003864	26199883	49103045	0.0500 1.50	0.100	0.200	0.500	1.00
PCB-1242 Peak 2	BNB	Lin1	6007031 140388154	10740830	21338172	50715677	93704150	0.0500 1.50	0.100	0.200	0.500	1.00
PCB-1242 Peak 3	BNB	Lin1	12283850 323118201	21683330	46600343	113832910	214041150	0.0500 1.50	0.100	0.200	0.500	1.00
PCB-1242 Peak 4	BNB	Lin1	5147971 139456451	9271119	20275227	49113593	92672804	0.0500 1.50	0.100	0.200	0.500	1.00
PCB-1242 Peak 5	BNB	Lin1	4743761 108343577	8172408	16185120	38405354	72344099	0.0500 1.50	0.100	0.200	0.500	1.00
PCB-1268 Peak 1	BNB	Lin1	31968988 862944743	59487739	119240585	291803033	555201578	0.0500 1.50	0.100	0.200	0.500	1.00
PCB-1268 Peak 2	BNB	Lin1	32297096 860482446	60152794	121073252	297211629	554906452	0.0500 1.50	0.100	0.200	0.500	1.00
PCB-1268 Peak 3	BNB	Lin1	27417643 749298237	51562650	103675202	255269457	482829794	0.0500 1.50	0.100	0.200	0.500	1.00
PCB-1268 Peak 4	BNB	Lin1	11377375 309152397	21464749	42860523	105575045	199687939	0.0500 1.50	0.100	0.200	0.500	1.00
PCB-1268 Peak 5	BNB	Lin1	83042585 2379618487	156412981	313390378	779177377	1505093369	0.0500 1.50	0.100	0.200	0.500	1.00

Curve Type Legend:
Lin1 = Linear 1/conc ISTD

FORM VI
PCBS BY INTERNAL STANDARD - INITIAL CALIBRATION DATA
CURVE EVALUATION

Lab Name: TestAmerica Canton Job No.: 240-81698-1 Analy Batch No.: 281427

SDG No.:

Instrument ID: A2HP11 GC Column: CLP-1 (0.53 ID: 0.53(mm) Heated Purge: (Y/N) N

Calibration Start Date: 06/04/2017 15:12 Calibration End Date: 06/04/2017 16:45 Calibration ID: 40225

Calibration Files:

LEVEL:	LAB SAMPLE ID:	LAB FILE ID:
Level 1	STD005 240-281427/16	P11060416.D
Level 2	STD01 240-281427/17	P11060417.D
Level 3	STD02 240-281427/18	P11060418.D
Level 4	STD05 240-281427/19	P11060419.D
Level 5	STD1 240-281427/20	P11060420.D
Level 6	std1.5 1248	P11060421.D

ANALYTE	RRF					CURVE TYPE	COEFFICIENT			#	MIN RRF	%RSD	#	MAX %RSD	R^2 OR COD	#	MIN R^2 OR COD
	LVL 1 LVL 6	LVL 2	LVL 3	LVL 4	LVL 5		B	M1	M2								
PCB-1248 Peak 1	0.0478 0.0387	0.0430	0.0419	0.0435	0.0391	Lin1	0.0005	0.0391							0.9980		0.9900
PCB-1248 Peak 2	0.0496 0.0391	0.0447	0.0429	0.0462	0.0396	Lin1	0.0006	0.0398							0.9960		0.9900
PCB-1248 Peak 3	0.0410 0.0387	0.0418	0.0387	0.0379	0.0410	Lin1	0.0001	0.0392							0.9990		0.9900
PCB-1248 Peak 4	0.0380 0.0307	0.0337	0.0329	0.0343	0.0309	Lin1	0.0004	0.0310							0.9980		0.9900
PCB-1248 Peak 5	0.0247 0.0201	0.0217	0.0214	0.0224	0.0198	Lin1	0.0002	0.0201							0.9980		0.9900

Note: The M1 coefficient is the same as Ave RRF for an Ave curve type.

FORM VI
PCBS BY INTERNAL STANDARD - INITIAL CALIBRATION DATA
RESPONSE AND CONCENTRATION

Lab Name: TestAmerica Canton Job No.: 240-81698-1 Analy Batch No.: 281427

SDG No.:

Instrument ID: A2HP11 GC Column: CLP-1 (0.53 ID: 0.53(mm) Heated Purge: (Y/N) N

Calibration Start Date: 06/04/2017 15:12 Calibration End Date: 06/04/2017 16:45 Calibration ID: 40225

Calibration Files:

LEVEL:	LAB SAMPLE ID:	LAB FILE ID:
Level 1	STD005 240-281427/16	P11060416.D
Level 2	STD01 240-281427/17	P11060417.D
Level 3	STD02 240-281427/18	P11060418.D
Level 4	STD05 240-281427/19	P11060419.D
Level 5	STD1 240-281427/20	P11060420.D
Level 6	std1.5 1248	P11060421.D

ANALYTE	IS REF	CURVE TYPE	RESPONSE					CONCENTRATION (NG/UL)				
			LVL 1 LVL 6	LVL 2	LVL 3	LVL 4	LVL 5	LVL 1 LVL 6	LVL 2	LVL 3	LVL 4	LVL 5
PCB-1248 Peak 1	BNB	Lin1	3327299 87962005	6644220	12178029	19399842	56034472	0.0500 1.50	0.100	0.200	0.500	1.00
PCB-1248 Peak 2	BNB	Lin1	3450895 88742890	6906996	12484344	20615960	56730452	0.0500 1.50	0.100	0.200	0.500	1.00
PCB-1248 Peak 3	BNB	Lin1	2852210 87877071	6459354	11240666	16917106	58691927	0.0500 1.50	0.100	0.200	0.500	1.00
PCB-1248 Peak 4	BNB	Lin1	2647122 69825745	5208894	9555694	15297745	44318933	0.0500 1.50	0.100	0.200	0.500	1.00
PCB-1248 Peak 5	BNB	Lin1	1717324 45763355	3345076	6218830	9976001	28372209	0.0500 1.50	0.100	0.200	0.500	1.00

Curve Type Legend:

Lin1 = Linear 1/conc ISTD

FORM VI
PCBS BY INTERNAL STANDARD - INITIAL CALIBRATION DATA
CURVE EVALUATION

Lab Name: TestAmerica Canton Job No.: 240-81698-1 Analy Batch No.: 281427

SDG No.:

Instrument ID: A2HP11 GC Column: CLP-2 (0.53 ID: 0.53(mm) Heated Purge: (Y/N) N

Calibration Start Date: 06/04/2017 15:12 Calibration End Date: 06/04/2017 16:45 Calibration ID: 40226

Calibration Files:

LEVEL:	LAB SAMPLE ID:	LAB FILE ID:
Level 1	STD005 240-281427/16	P11060416.D
Level 2	STD01 240-281427/17	P11060417.D
Level 3	STD02 240-281427/18	P11060418.D
Level 4	STD05 240-281427/19	P11060419.D
Level 5	STD1 240-281427/20	P11060420.D
Level 6	std1.5 1248	P11060421.D

ANALYTE	RRF					CURVE TYPE	COEFFICIENT			#	MIN RRF	%RSD	#	MAX %RSD	R^2 OR COD	#	MIN R^2 OR COD
	LVL 1 LVL 6	LVL 2	LVL 3	LVL 4	LVL 5		B	M1	M2								
PCB-1248 Peak 1	0.0488 0.0404	0.0459	0.0449	0.0455	0.0417	Lin1	0.0005	0.0412							0.9980		0.9900
PCB-1248 Peak 2	0.0294 0.0228	0.0266	0.0260	0.0267	0.0232	Lin1	0.0004	0.0232							0.9960		0.9900
PCB-1248 Peak 3	0.0450 0.0319	0.0409	0.0386	0.0383	0.0329	Lin1	0.0008	0.0325							0.9950		0.9900
PCB-1248 Peak 4	0.0511 0.0412	0.0477	0.0464	0.0457	0.0419	Lin1	0.0006	0.0416							0.9990		0.9900
PCB-1248 Peak 5	0.0280 0.0235	0.0266	0.0263	0.0261	0.0238	Lin1	0.0003	0.0237							0.9980		0.9900

Note: The M1 coefficient is the same as Ave RRF for an Ave curve type.

FORM VI
PCBS BY INTERNAL STANDARD - INITIAL CALIBRATION DATA
RESPONSE AND CONCENTRATION

Lab Name: TestAmerica Canton Job No.: 240-81698-1 Analy Batch No.: 281427

SDG No.:

Instrument ID: A2HP11 GC Column: CLP-2 (0.53 ID: 0.53(mm) Heated Purge: (Y/N) N

Calibration Start Date: 06/04/2017 15:12 Calibration End Date: 06/04/2017 16:45 Calibration ID: 40226

Calibration Files:

LEVEL:	LAB SAMPLE ID:	LAB FILE ID:
Level 1	STD005 240-281427/16	P11060416.D
Level 2	STD01 240-281427/17	P11060417.D
Level 3	STD02 240-281427/18	P11060418.D
Level 4	STD05 240-281427/19	P11060419.D
Level 5	STD1 240-281427/20	P11060420.D
Level 6	std1.5 1248	P11060421.D

ANALYTE	IS REF	CURVE TYPE	RESPONSE					CONCENTRATION (NG/UL)				
			LVL 1 LVL 6	LVL 2	LVL 3	LVL 4	LVL 5	LVL 1 LVL 6	LVL 2	LVL 3	LVL 4	LVL 5
PCB-1248 Peak 1	BNB	Lin1	6625796 176087719	13725305	25339714	40926907	116116049	0.0500 1.50	0.100	0.200	0.500	1.00
PCB-1248 Peak 2	BNB	Lin1	3991824 99220323	7962358	14638150	23968308	64613643	0.0500 1.50	0.100	0.200	0.500	1.00
PCB-1248 Peak 3	BNB	Lin1	6107699 138806988	12221824	21749550	34482977	91517106	0.0500 1.50	0.100	0.200	0.500	1.00
PCB-1248 Peak 4	BNB	Lin1	6941572 179698869	14265556	26186163	41108065	116642921	0.0500 1.50	0.100	0.200	0.500	1.00
PCB-1248 Peak 5	BNB	Lin1	3797037 102211616	7958256	14856628	23427845	66280150	0.0500 1.50	0.100	0.200	0.500	1.00

Curve Type Legend:
Lin1 = Linear 1/conc ISTD

FORM VI
PCBS BY INTERNAL STANDARD - INITIAL CALIBRATION DATA
CURVE EVALUATION

Lab Name: TestAmerica Canton Job No.: 240-81698-1 Analy Batch No.: 281427

SDG No.:

Instrument ID: A2HP11 GC Column: CLP-1 (0.53 ID: 0.53(mm) Heated Purge: (Y/N) N

Calibration Start Date: 06/04/2017 17:04 Calibration End Date: 06/04/2017 18:37 Calibration ID: 40231

Calibration Files:

LEVEL:	LAB SAMPLE ID:	LAB FILE ID:
Level 1	STD005 240-281427/22	P11060422.D
Level 2	STD01 240-281427/23	P11060423.D
Level 3	STD02 240-281427/24	P11060424.D
Level 4	STD05 240-281427/25	P11060425.D
Level 5	STD1 240-281427/26	P11060426.D
Level 6	std1.5 ar2154	P11060427.D

ANALYTE	RRF					CURVE TYPE	COEFFICIENT			#	MIN RRF	%RSD	#	MAX %RSD	R^2 OR COD	#	MIN R^2 OR COD
	LVL 1 LVL 6	LVL 2	LVL 3	LVL 4	LVL 5		B	M1	M2								
PCB-1221 Peak 1	0.0123 0.0092	0.0112	0.0111	0.0093	0.0092	Lin1	0.0002	0.0090							0.9990		0.9900
PCB-1221 Peak 2	0.0101 0.0060	0.0085	0.0076	0.0062	0.0060	Lin1	0.0002	0.0058							0.9990		0.9900
PCB-1221 Peak 3	0.0312 0.0224	0.0280	0.0261	0.0225	0.0223	Lin1	0.0005	0.0220							0.9990		0.9900
PCB-1254 Peak 1	0.0525 0.0437	0.0481	0.0458	0.0412	0.0430	Lin1	0.0005	0.0427							0.9990		0.9900
PCB-1254 Peak 2	0.0719 0.0658	0.0677	0.0658	0.0620	0.0640	Lin1	0.0003	0.0643							0.9990		0.9900
PCB-1254 Peak 3	0.0549 0.0497	0.0519	0.0503	0.0466	0.0482	Lin1	0.0003	0.0485							0.9990		0.9900
PCB-1254 Peak 4	0.0504 0.0440	0.0474	0.0456	0.0413	0.0424	Lin1	0.0004	0.0427							0.9990		0.9900
PCB-1254 Peak 5	0.0738 0.0693	0.0704	0.0693	0.0638	0.0666	Lin1	0.0002	0.0673							0.9990		0.9900

Note: The M1 coefficient is the same as Ave RRF for an Ave curve type.

FORM VI
PCBS BY INTERNAL STANDARD - INITIAL CALIBRATION DATA
RESPONSE AND CONCENTRATION

Lab Name: TestAmerica Canton Job No.: 240-81698-1 Analy Batch No.: 281427

SDG No.:

Instrument ID: A2HP11 GC Column: CLP-1 (0.53 ID: 0.53(mm) Heated Purge: (Y/N) N

Calibration Start Date: 06/04/2017 17:04 Calibration End Date: 06/04/2017 18:37 Calibration ID: 40231

Calibration Files:

LEVEL:	LAB SAMPLE ID:	LAB FILE ID:
Level 1	STD005 240-281427/22	P11060422.D
Level 2	STD01 240-281427/23	P11060423.D
Level 3	STD02 240-281427/24	P11060424.D
Level 4	STD05 240-281427/25	P11060425.D
Level 5	STD1 240-281427/26	P11060426.D
Level 6	std1.5 ar2154	P11060427.D

ANALYTE	IS REF	CURVE TYPE	RESPONSE					CONCENTRATION (NG/UL)				
			LVL 1 LVL 6	LVL 2	LVL 3	LVL 4	LVL 5	LVL 1 LVL 6	LVL 2	LVL 3	LVL 4	LVL 5
PCB-1221 Peak 1	BNB	Lin1	787935 17550024	1521108	2888017	6776155	11923847	0.0500 1.50	0.100	0.200	0.500	1.00
PCB-1221 Peak 2	BNB	Lin1	650695 11400323	1150329	1974912	4535555	7771396	0.0500 1.50	0.100	0.200	0.500	1.00
PCB-1221 Peak 3	BNB	Lin1	2001981 42891008	3791283	6801112	16498749	29061162	0.0500 1.50	0.100	0.200	0.500	1.00
PCB-1254 Peak 1	BNB	Lin1	3371962 83677556	6524281	11954940	30199877	55913283	0.0500 1.50	0.100	0.200	0.500	1.00
PCB-1254 Peak 2	BNB	Lin1	4616402 125850153	9176871	17174312	45438420	83259552	0.0500 1.50	0.100	0.200	0.500	1.00
PCB-1254 Peak 3	BNB	Lin1	3525012 95177762	7034932	13122605	34158748	62740077	0.0500 1.50	0.100	0.200	0.500	1.00
PCB-1254 Peak 4	BNB	Lin1	3237527 84114210	6428318	11899173	30231441	55192187	0.0500 1.50	0.100	0.200	0.500	1.00
PCB-1254 Peak 5	BNB	Lin1	4741675 132644688	9548297	18068604	46714286	86653335	0.0500 1.50	0.100	0.200	0.500	1.00

Curve Type Legend:
Lin1 = Linear 1/conc ISTD

FORM VI
PCBS BY INTERNAL STANDARD - INITIAL CALIBRATION DATA
CURVE EVALUATION

Lab Name: TestAmerica Canton Job No.: 240-81698-1 Analy Batch No.: 281427

SDG No.:

Instrument ID: A2HP11 GC Column: CLP-2 (0.53 ID: 0.53(mm) Heated Purge: (Y/N) N

Calibration Start Date: 06/04/2017 17:04 Calibration End Date: 06/04/2017 18:37 Calibration ID: 40232

Calibration Files:

LEVEL:	LAB SAMPLE ID:	LAB FILE ID:
Level 1	STD005 240-281427/22	P11060422.D
Level 2	STD01 240-281427/23	P11060423.D
Level 3	STD02 240-281427/24	P11060424.D
Level 4	STD05 240-281427/25	P11060425.D
Level 5	STD1 240-281427/26	P11060426.D
Level 6	std1.5 ar2154	P11060427.D

ANALYTE	RRF					CURVE TYPE	COEFFICIENT			#	MIN RRF	%RSD	#	MAX %RSD	R^2 OR COD	#	MIN R^2 OR COD
	LVL 1 LVL 6	LVL 2	LVL 3	LVL 4	LVL 5		B	M1	M2								
PCB-1221 Peak 1	0.0126 0.0095	0.0110	0.0105	0.0098	0.0095	Lin1	0.0002	0.0094							1.0000		0.9900
PCB-1221 Peak 2	0.0073 0.0062	0.0073	0.0072	0.0064	0.0063	Lin1	0.0001	0.0062							0.9990		0.9900
PCB-1221 Peak 3	0.0300 0.0241	0.0279	0.0272	0.0240	0.0240	Lin1	0.0004	0.0237							0.9990		0.9900
PCB-1254 Peak 1	0.0475 0.0375	0.0441	0.0420	0.0377	0.0375	Lin1	0.0006	0.0370							1.0000		0.9900
PCB-1254 Peak 2	0.0545 0.0434	0.0507	0.0485	0.0433	0.0433	Lin1	0.0007	0.0428							1.0000		0.9900
PCB-1254 Peak 3	0.0759 0.0661	0.0806	0.0782	0.0713	0.0706	Lin1	0.0009	0.0679							0.9980		0.9900
PCB-1254 Peak 4	0.0554 0.0495	0.0539	0.0540	0.0488	0.0488	Lin1	0.0004	0.0489							0.9990		0.9900
PCB-1254 Peak 5	0.0770 0.0677	0.0768	0.0747	0.0672	0.0673	Lin1	0.0007	0.0670							0.9990		0.9900

Note: The M1 coefficient is the same as Ave RRF for an Ave curve type.

FORM VI
PCBS BY INTERNAL STANDARD - INITIAL CALIBRATION DATA
RESPONSE AND CONCENTRATION

Lab Name: TestAmerica Canton Job No.: 240-81698-1 Analy Batch No.: 281427

SDG No.:

Instrument ID: A2HP11 GC Column: CLP-2 (0.53 ID: 0.53(mm) Heated Purge: (Y/N) N

Calibration Start Date: 06/04/2017 17:04 Calibration End Date: 06/04/2017 18:37 Calibration ID: 40232

Calibration Files:

LEVEL:	LAB SAMPLE ID:	LAB FILE ID:
Level 1	STD005 240-281427/22	P11060422.D
Level 2	STD01 240-281427/23	P11060423.D
Level 3	STD02 240-281427/24	P11060424.D
Level 4	STD05 240-281427/25	P11060425.D
Level 5	STD1 240-281427/26	P11060426.D
Level 6	std1.5 ar2154	P11060427.D

ANALYTE	IS REF	CURVE TYPE	RESPONSE					CONCENTRATION (NG/UL)				
			LVL 1 LVL 6	LVL 2	LVL 3	LVL 4	LVL 5	LVL 1 LVL 6	LVL 2	LVL 3	LVL 4	LVL 5
PCB-1221 Peak 1	BNB	Lin1	1590075 35346647	2907501	5378032	13976406	24089592	0.0500 1.50	0.100	0.200	0.500	1.00
PCB-1221 Peak 2	BNB	Lin1	917884 23255015	1938217	3679218	9071628	15926020	0.0500 1.50	0.100	0.200	0.500	1.00
PCB-1221 Peak 3	BNB	Lin1	3783005 89914260	7387163	13925952	34089503	60979624	0.0500 1.50	0.100	0.200	0.500	1.00
PCB-1254 Peak 1	BNB	Lin1	5993958 140215100	11662532	21514197	53519117	95367585	0.0500 1.50	0.100	0.200	0.500	1.00
PCB-1254 Peak 2	BNB	Lin1	6877607 162179390	13426148	24844289	61498227	110231537	0.0500 1.50	0.100	0.200	0.500	1.00
PCB-1254 Peak 3	BNB	Lin1	9579043 247179326	21317537	40033214	101270638	179693446	0.0500 1.50	0.100	0.200	0.500	1.00
PCB-1254 Peak 4	BNB	Lin1	6988075 184835422	14254577	27658896	69256525	124254439	0.0500 1.50	0.100	0.200	0.500	1.00
PCB-1254 Peak 5	BNB	Lin1	9716599 252841754	20316170	38235349	95363902	171423503	0.0500 1.50	0.100	0.200	0.500	1.00

Curve Type Legend:
Lin1 = Linear 1/conc ISTD

FORM VI
PCBS BY INTERNAL STANDARD - INITIAL CALIBRATION DATA
CURVE EVALUATION

Lab Name: TestAmerica Canton Job No.: 240-81698-1 Analy Batch No.: 281427

SDG No.:

Instrument ID: A2HP11 GC Column: CLP-1 (0.53 ID: 0.53(mm) Heated Purge: (Y/N) N

Calibration Start Date: 06/04/2017 18:55 Calibration End Date: 06/04/2017 20:29 Calibration ID: 40237

Calibration Files:

LEVEL:	LAB SAMPLE ID:	LAB FILE ID:
Level 1	STD005 240-281427/28	P11060428.D
Level 2	STD01 240-281427/29	P11060429.D
Level 3	STD02 240-281427/30	P11060430.D
Level 4	STD05 240-281427/31	P11060431.D
Level 5	STD1 240-281427/32	P11060432.D
Level 6	std1.5 1660	P11060433.D

ANALYTE	RRF					CURVE TYPE	COEFFICIENT			#	MIN RRF	%RSD	#	MAX %RSD	R^2 OR COD	#	MIN R^2 OR COD
	LVL 1 LVL 6	LVL 2	LVL 3	LVL 4	LVL 5		B	M1	M2								
PCB-1016 Peak 1	0.0269 0.0189	0.0246	0.0216	0.0197	0.0190	Lin1	0.0005	0.0186							1.0000		0.9900
PCB-1016 Peak 2	0.0456 0.0336	0.0425	0.0380	0.0353	0.0341	Lin1	0.0007	0.0334							1.0000		0.9900
PCB-1016 Peak 3	0.0976 0.0843	0.0931	0.0871	0.0852	0.0845	Lin1	0.0008	0.0838							1.0000		0.9900
PCB-1016 Peak 4	0.0450 0.0352	0.0421	0.0379	0.0357	0.0352	Lin1	0.0006	0.0347							1.0000		0.9900
PCB-1016 Peak 5	0.0435 0.0353	0.0406	0.0366	0.0356	0.0353	Lin1	0.0005	0.0349							1.0000		0.9900
PCB-1260 Peak 1	0.0650 0.0525	0.0612	0.0551	0.0528	0.0527	Lin1	0.0007	0.0519							1.0000		0.9900
PCB-1260 Peak 2	0.1203 0.1003	0.1142	0.1042	0.1012	0.1011	Lin1	0.0011	0.0996							1.0000		0.9900
PCB-1260 Peak 3	0.1153 0.1023	0.1106	0.1022	0.1010	0.1022	Lin1	0.0007	0.1013							1.0000		0.9900
PCB-1260 Peak 4	0.1565 0.1381	0.1515	0.1374	0.1364	0.1376	Lin1	0.0010	0.1365							1.0000		0.9900
PCB-1260 Peak 5	0.0782 0.0705	0.0748	0.0703	0.0697	0.0706	Lin1	0.0004	0.0700							1.0000		0.9900
Tetrachloro-m-xylene	1.1266 0.9201	1.0722	0.9838	0.9581	0.9379	Ave		0.9998				8.2		20.0			
DCB Decachlorobiphenyl	1.4354 1.0865	1.3102	1.1420	1.0837	1.0918	Ave		1.1916				12.4		20.0			

Note: The M1 coefficient is the same as Ave RRF for an Ave curve type.

FORM VI
PCBS BY INTERNAL STANDARD - INITIAL CALIBRATION DATA
RESPONSE AND CONCENTRATION

Lab Name: TestAmerica Canton Job No.: 240-81698-1 Analy Batch No.: 281427

SDG No.:

Instrument ID: A2HP11 GC Column: CLP-1 (0.53 ID: 0.53(mm) Heated Purge: (Y/N) N

Calibration Start Date: 06/04/2017 18:55 Calibration End Date: 06/04/2017 20:29 Calibration ID: 40237

Calibration Files:

LEVEL:	LAB SAMPLE ID:	LAB FILE ID:
Level 1	STD005 240-281427/28	P11060428.D
Level 2	STD01 240-281427/29	P11060429.D
Level 3	STD02 240-281427/30	P11060430.D
Level 4	STD05 240-281427/31	P11060431.D
Level 5	STD1 240-281427/32	P11060432.D
Level 6	std1.5 1660	P11060433.D

ANALYTE	IS REF	CURVE TYPE	RESPONSE					CONCENTRATION (NG/UL)				
			LVL 1 LVL 6	LVL 2	LVL 3	LVL 4	LVL 5	LVL 1 LVL 6	LVL 2	LVL 3	LVL 4	LVL 5
PCB-1016 Peak 1	BNB	Lin1	1747868 40620118	3253065	6455087	14946553	27288625	0.0500 1.50	0.100	0.200	0.500	1.00
PCB-1016 Peak 2	BNB	Lin1	2960967 72127231	5617098	11366206	26716721	49019703	0.0500 1.50	0.100	0.200	0.500	1.00
PCB-1016 Peak 3	BNB	Lin1	6345359 181076809	12292658	26032736	64543182	121496363	0.0500 1.50	0.100	0.200	0.500	1.00
PCB-1016 Peak 4	BNB	Lin1	2926971 75476111	5557158	11326755	27019630	50575291	0.0500 1.50	0.100	0.200	0.500	1.00
PCB-1016 Peak 5	BNB	Lin1	2829570 75797962	5354810	10934339	26996969	50766265	0.0500 1.50	0.100	0.200	0.500	1.00
PCB-1260 Peak 1	BNB	Lin1	4222575 112776664	8077281	16467514	39995290	75764724	0.0500 1.50	0.100	0.200	0.500	1.00
PCB-1260 Peak 2	BNB	Lin1	7821388 215444763	15076355	31161534	76700895	145334584	0.0500 1.50	0.100	0.200	0.500	1.00
PCB-1260 Peak 3	BNB	Lin1	7495584 219568593	14609454	30564521	76523138	146897327	0.0500 1.50	0.100	0.200	0.500	1.00
PCB-1260 Peak 4	BNB	Lin1	10168242 296494996	20001194	41083054	103336090	197763606	0.0500 1.50	0.100	0.200	0.500	1.00
PCB-1260 Peak 5	BNB	Lin1	5079383 151473562	9873797	21014320	52783993	101493687	0.0500 1.50	0.100	0.200	0.500	1.00
Tetrachloro-m-xylene	BNB	Ave	3660781 131710987	7078715	14708325	36297305	67422129	0.00250 0.100	0.00500	0.0100	0.0250	0.0500
DCB Decachlorobiphenyl	BNB	Ave	4664366 155536021	8649863	17072712	41058530	78483426	0.00250 0.100	0.00500	0.0100	0.0250	0.0500

Curve Type Legend:

Ave = Average ISTD
Lin1 = Linear 1/conc ISTD

FORM VI
PCBS BY INTERNAL STANDARD - INITIAL CALIBRATION DATA
CURVE EVALUATION

Lab Name: TestAmerica Canton Job No.: 240-81698-1 Analy Batch No.: 281427

SDG No.:

Instrument ID: A2HP11 GC Column: CLP-2 (0.53 ID: 0.53(mm) Heated Purge: (Y/N) N

Calibration Start Date: 06/04/2017 18:55 Calibration End Date: 06/04/2017 20:29 Calibration ID: 40238

Calibration Files:

LEVEL:	LAB SAMPLE ID:	LAB FILE ID:
Level 1	STD005 240-281427/28	P11060428.D
Level 2	STD01 240-281427/29	P11060429.D
Level 3	STD02 240-281427/30	P11060430.D
Level 4	STD05 240-281427/31	P11060431.D
Level 5	STD1 240-281427/32	P11060432.D
Level 6	std1.5 1660	P11060433.D

ANALYTE	RRF					CURVE TYPE	COEFFICIENT			#	MIN RRF	%RSD	#	MAX %RSD	R^2 OR COD	#	MIN R^2 OR COD
	LVL 1 LVL 6	LVL 2	LVL 3	LVL 4	LVL 5		B	M1	M2								
PCB-1016 Peak 1	0.0257 0.0199	0.0245	0.0221	0.0208	0.0200	Lin1	0.0004	0.0198							1.0000		0.9900
PCB-1016 Peak 2	0.0492 0.0372	0.0474	0.0408	0.0401	0.0381	Lin1	0.0008	0.0373							0.9990		0.9900
PCB-1016 Peak 3	0.1017 0.0846	0.0976	0.0931	0.0906	0.0861	Lin1	0.0011	0.0851							0.9990		0.9900
PCB-1016 Peak 4	0.0456 0.0368	0.0430	0.0395	0.0390	0.0374	Lin1	0.0005	0.0368							1.0000		0.9900
PCB-1016 Peak 5	0.0386 0.0284	0.0354	0.0328	0.0301	0.0288	Lin1	0.0006	0.0282							0.9990		0.9900
PCB-1260 Peak 1	0.0717 0.0587	0.0695	0.0652	0.0620	0.0598	Lin1	0.0009	0.0589							1.0000		0.9900
PCB-1260 Peak 2	0.0805 0.0684	0.0806	0.0758	0.0721	0.0696	Lin1	0.0009	0.0687							0.9990		0.9900
PCB-1260 Peak 3	0.1139 0.0991	0.1156	0.1092	0.1039	0.1005	Lin1	0.0012	0.0994							0.9990		0.9900
PCB-1260 Peak 4	0.1604 0.1355	0.1556	0.1460	0.1395	0.1362	Lin1	0.0016	0.1349							1.0000		0.9900
PCB-1260 Peak 5	0.1131 0.0949	0.1102	0.1018	0.0980	0.0956	Lin1	0.0012	0.0946							1.0000		0.9900
Tetrachloro-m-xylene	1.1612 0.9574	1.1473	1.0673	1.0329	0.9901	Lin1	0.0007	0.9664							0.9990		0.9900
DCB Decachlorobiphenyl	1.3047 1.0409	1.2476	1.1353	1.0808	1.0655	Ave		1.1458				9.3		20.0			

Note: The M1 coefficient is the same as Ave RRF for an Ave curve type.

FORM VI
PCBS BY INTERNAL STANDARD - INITIAL CALIBRATION DATA
RESPONSE AND CONCENTRATION

Lab Name: TestAmerica Canton Job No.: 240-81698-1 Analy Batch No.: 281427

SDG No.:

Instrument ID: A2HP11 GC Column: CLP-2 (0.53 ID: 0.53(mm) Heated Purge: (Y/N) N

Calibration Start Date: 06/04/2017 18:55 Calibration End Date: 06/04/2017 20:29 Calibration ID: 40238

Calibration Files:

LEVEL:	LAB SAMPLE ID:	LAB FILE ID:
Level 1	STD005 240-281427/28	P11060428.D
Level 2	STD01 240-281427/29	P11060429.D
Level 3	STD02 240-281427/30	P11060430.D
Level 4	STD05 240-281427/31	P11060431.D
Level 5	STD1 240-281427/32	P11060432.D
Level 6	std1.5 1660	P11060433.D

ANALYTE	IS REF	CURVE TYPE	RESPONSE					CONCENTRATION (NG/UL)				
			LVL 1 LVL 6	LVL 2	LVL 3	LVL 4	LVL 5	LVL 1 LVL 6	LVL 2	LVL 3	LVL 4	LVL 5
PCB-1016 Peak 1	BNB	Lin1	3272743 82148123	6341619	12738719	30245528	55652143	0.0500 1.50	0.100	0.200	0.500	1.00
PCB-1016 Peak 2	BNB	Lin1	6273976 153508083	12259797	23522377	58336667	105767098	0.0500 1.50	0.100	0.200	0.500	1.00
PCB-1016 Peak 3	BNB	Lin1	12970332 348683042	25243272	53605047	131698846	239115470	0.0500 1.50	0.100	0.200	0.500	1.00
PCB-1016 Peak 4	BNB	Lin1	5817138 151751961	11111860	22753652	56658686	103896280	0.0500 1.50	0.100	0.200	0.500	1.00
PCB-1016 Peak 5	BNB	Lin1	4919266 116956635	9148046	18876300	43754046	79946804	0.0500 1.50	0.100	0.200	0.500	1.00
PCB-1260 Peak 1	BNB	Lin1	9141917 242049549	17984386	37582216	90110661	166016046	0.0500 1.50	0.100	0.200	0.500	1.00
PCB-1260 Peak 2	BNB	Lin1	10265125 282084904	20851481	43681680	104793160	193294855	0.0500 1.50	0.100	0.200	0.500	1.00
PCB-1260 Peak 3	BNB	Lin1	14525987 408574506	29917228	62879592	150935182	279206736	0.0500 1.50	0.100	0.200	0.500	1.00
PCB-1260 Peak 4	BNB	Lin1	20467306 558566887	40249349	84098097	202752340	378397296	0.0500 1.50	0.100	0.200	0.500	1.00
PCB-1260 Peak 5	BNB	Lin1	14424963 391396658	28513295	58624130	142456532	265696210	0.0500 1.50	0.100	0.200	0.500	1.00
Tetrachloro-m-xylene	BNB	Lin1	7407003 263211000	14840966	30742986	75042821	137539815	0.00250 0.100	0.00500	0.0100	0.0250	0.0500
DCB Decachlorobiphenyl	BNB	Ave	8322498 286159685	16137308	32700797	78522511	148015196	0.00250 0.100	0.00500	0.0100	0.0250	0.0500

Curve Type Legend:

Ave = Average ISTD
Lin1 = Linear 1/conc ISTD

FORM VI
PCBS BY INTERNAL STANDARD - INITIAL CALIBRATION DATA
CURVE EVALUATION

Lab Name: TestAmerica Canton Job No.: 240-81698-1 Analy Batch No.: 285960

SDG No.:

Instrument ID: A2HP4 GC Column: CLP-1 (0.53 ID: 0.53(mm) Heated Purge: (Y/N) N

Calibration Start Date: 07/05/2017 14:55 Calibration End Date: 07/05/2017 16:33 Calibration ID: 40539

Calibration Files:

LEVEL:	LAB SAMPLE ID:	LAB FILE ID:
Level 1	STD005 240-285960/4	P40705004.D
Level 2	STD01 240-285960/5	P40705005.D
Level 3	STD02 240-285960/6	P40705006.D
Level 4	STD05 240-285960/7	P40705007.D
Level 5	STD1 240-285960/8	P40705008.D
Level 6	STD15 240-285960/9	P40705009.D

ANALYTE	RRF					CURVE TYPE	COEFFICIENT			#	MIN RRF	%RSD	#	MAX %RSD	R^2 OR COD	#	MIN R^2 OR COD
	LVL 1 LVL 6	LVL 2	LVL 3	LVL 4	LVL 5		B	M1	M2								
PCB-1232 Peak 1	0.0407 0.0232	0.0268	0.0273	0.0237	0.0232	Lin1	0.0008	0.0225							0.9990		0.9900
PCB-1232 Peak 2	0.0217 0.0171	0.0193	0.0187	0.0177	0.0174	Lin1	0.0002	0.0171							1.0000		0.9900
PCB-1232 Peak 3	0.0332 0.0346	0.0368	0.0354	0.0342	0.0350	Lin1	0	0.0347							1.0000		0.9900
PCB-1232 Peak 4	0.0152 0.0154	0.0151	0.0155	0.0155	0.0155	Lin1	0	0.0155							1.0000		0.9900
PCB-1232 Peak 5	0.0038 0.0056	0.0037	0.0059	0.0057	0.0056	Lin1	0	0.0058							0.9970		0.9900
PCB-1262 Peak 1	0.0368 0.0340	0.0382	0.0358	0.0340	0.0345	Lin1	0.0002	0.0340							1.0000		0.9900
PCB-1262 Peak 2	0.0512 0.0475	0.0516	0.0491	0.0478	0.0484	Lin1	0.0003	0.0476							1.0000		0.9900
PCB-1262 Peak 3	0.0582 0.0545	0.0590	0.0547	0.0547	0.0551	Lin1	0.0002	0.0545							1.0000		0.9900
PCB-1262 Peak 4	0.1225 0.1147	0.1296	0.1247	0.1190	0.1186	Lin1	0.0008	0.1162							0.9990		0.9900
PCB-1262 Peak 5	0.0519 0.0473	0.0532	0.0495	0.0478	0.0494	Lin1	0.0003	0.0478							0.9990		0.9900

Note: The M1 coefficient is the same as Ave RRF for an Ave curve type.

FORM VI
PCBS BY INTERNAL STANDARD - INITIAL CALIBRATION DATA
RESPONSE AND CONCENTRATION

Lab Name: TestAmerica Canton Job No.: 240-81698-1 Analy Batch No.: 285960

SDG No.:

Instrument ID: A2HP4 GC Column: CLP-1 (0.53 ID: 0.53(mm) Heated Purge: (Y/N) N

Calibration Start Date: 07/05/2017 14:55 Calibration End Date: 07/05/2017 16:33 Calibration ID: 40539

Calibration Files:

LEVEL:	LAB SAMPLE ID:	LAB FILE ID:
Level 1	STD005 240-285960/4	P40705004.D
Level 2	STD01 240-285960/5	P40705005.D
Level 3	STD02 240-285960/6	P40705006.D
Level 4	STD05 240-285960/7	P40705007.D
Level 5	STD1 240-285960/8	P40705008.D
Level 6	STD15 240-285960/9	P40705009.D

ANALYTE	IS REF	CURVE TYPE	RESPONSE					CONCENTRATION (NG/UL)				
			LVL 1 LVL 6	LVL 2	LVL 3	LVL 4	LVL 5	LVL 1 LVL 6	LVL 2	LVL 3	LVL 4	LVL 5
PCB-1232 Peak 1	BNB	Lin1	2431071 41739074	3231667	6527080	14591312	28708258	0.0500 1.50	0.100	0.200	0.500	1.00
PCB-1232 Peak 2	BNB	Lin1	1295603 30729088	2320115	4471019	10905836	21453291	0.0500 1.50	0.100	0.200	0.500	1.00
PCB-1232 Peak 3	BNB	Lin1	1984251 62104437	4428643	8449549	21064245	43189255	0.0500 1.50	0.100	0.200	0.500	1.00
PCB-1232 Peak 4	BNB	Lin1	906879 27762659	1815389	3704582	9530074	19188743	0.0500 1.50	0.100	0.200	0.500	1.00
PCB-1232 Peak 5	BNB	Lin1	229027 10067506	448826	1420089	3533284	6933466	0.0500 1.50	0.100	0.200	0.500	1.00
PCB-1262 Peak 1	BNB	Lin1	2197053 61047865	4595415	8544870	20960468	42556552	0.0500 1.50	0.100	0.200	0.500	1.00
PCB-1262 Peak 2	BNB	Lin1	3059301 85370434	6206294	11721082	29434337	59749874	0.0500 1.50	0.100	0.200	0.500	1.00
PCB-1262 Peak 3	BNB	Lin1	3476770 98009282	7102272	13059336	33674847	68007055	0.0500 1.50	0.100	0.200	0.500	1.00
PCB-1262 Peak 4	BNB	Lin1	7323417 206240270	15596965	29751812	73278092	146469455	0.0500 1.50	0.100	0.200	0.500	1.00
PCB-1262 Peak 5	BNB	Lin1	3104358 85066961	6400476	11812410	29460704	61074064	0.0500 1.50	0.100	0.200	0.500	1.00

Curve Type Legend:
Lin1 = Linear 1/conc ISTD

FORM VI
PCBS BY INTERNAL STANDARD - INITIAL CALIBRATION DATA
CURVE EVALUATION

Lab Name: TestAmerica Canton Job No.: 240-81698-1 Analy Batch No.: 285960

SDG No.:

Instrument ID: A2HP4 GC Column: CLP-2 (0.53 ID: 0.53(mm) Heated Purge: (Y/N) N

Calibration Start Date: 07/05/2017 14:55 Calibration End Date: 07/05/2017 16:33 Calibration ID: 40540

Calibration Files:

LEVEL:	LAB SAMPLE ID:	LAB FILE ID:
Level 1	STD005 240-285960/4	P40705004.D
Level 2	STD01 240-285960/5	P40705005.D
Level 3	STD02 240-285960/6	P40705006.D
Level 4	STD05 240-285960/7	P40705007.D
Level 5	STD1 240-285960/8	P40705008.D
Level 6	STD15 240-285960/9	P40705009.D

ANALYTE	RRF					CURVE TYPE	COEFFICIENT			#	MIN RRF	%RSD	#	MAX %RSD	R^2 OR COD	#	MIN R^2 OR COD
	LVL 1 LVL 6	LVL 2	LVL 3	LVL 4	LVL 5		B	M1	M2								
PCB-1232 Peak 1	0.0271 0.0219	0.0254	0.0244	0.0223	0.0220	Lin1	0.0003	0.0218							1.0000		0.9900
PCB-1232 Peak 2	0.0187 0.0176	0.0194	0.0193	0.0179	0.0178	Lin1	0.0001	0.0177							1.0000		0.9900
PCB-1232 Peak 3	0.0331 0.0326	0.0348	0.0324	0.0315	0.0332	Lin1	0.0001	0.0326							0.9990		0.9900
PCB-1232 Peak 4	0.0143 0.0142	0.0142	0.0150	0.0134	0.0145	Lin1	0	0.0142							0.9990		0.9900
PCB-1232 Peak 5	0.0184 0.0096	0.0116	0.0128	0.0103	0.0099	Lin1	0.0004	0.0094							0.9970		0.9900
PCB-1262 Peak 1	0.0353 0.0348	0.0367	0.0344	0.0346	0.0358	Lin1	0	0.0350							1.0000		0.9900
PCB-1262 Peak 2	0.0521 0.0508	0.0533	0.0509	0.0502	0.0524	Lin1	0.0001	0.0512							1.0000		0.9900
PCB-1262 Peak 3	0.0467 0.0447	0.0497	0.0455	0.0442	0.0460	Lin1	0.0002	0.0449							0.9990		0.9900
PCB-1262 Peak 4	0.0909 0.0934	0.0957	0.0905	0.0907	0.0956	Lin1	0	0.0938							1.0000		0.9900
PCB-1262 Peak 5	0.0673 0.0656	0.0687	0.0645	0.0644	0.0670	Lin1	0.0001	0.0658							1.0000		0.9900

Note: The M1 coefficient is the same as Ave RRF for an Ave curve type.

FORM VI
PCBS BY INTERNAL STANDARD - INITIAL CALIBRATION DATA
RESPONSE AND CONCENTRATION

Lab Name: TestAmerica Canton Job No.: 240-81698-1 Analy Batch No.: 285960

SDG No.:

Instrument ID: A2HP4 GC Column: CLP-2 (0.53 ID: 0.53(mm) Heated Purge: (Y/N) N

Calibration Start Date: 07/05/2017 14:55 Calibration End Date: 07/05/2017 16:33 Calibration ID: 40540

Calibration Files:

LEVEL:	LAB SAMPLE ID:	LAB FILE ID:
Level 1	STD005 240-285960/4	P40705004.D
Level 2	STD01 240-285960/5	P40705005.D
Level 3	STD02 240-285960/6	P40705006.D
Level 4	STD05 240-285960/7	P40705007.D
Level 5	STD1 240-285960/8	P40705008.D
Level 6	STD15 240-285960/9	P40705009.D

ANALYTE	IS REF	CURVE TYPE	RESPONSE					CONCENTRATION (NG/UL)				
			LVL 1 LVL 6	LVL 2	LVL 3	LVL 4	LVL 5	LVL 1 LVL 6	LVL 2	LVL 3	LVL 4	LVL 5
PCB-1232 Peak 1	BNB	Lin1	1566277 37972788	2943579	5639715	13274204	26197999	0.0500 1.50	0.100	0.200	0.500	1.00
PCB-1232 Peak 2	BNB	Lin1	1078959 30535914	2240786	4458624	10664067	21119068	0.0500 1.50	0.100	0.200	0.500	1.00
PCB-1232 Peak 3	BNB	Lin1	1911986 56370929	4029113	7482439	18765293	39495871	0.0500 1.50	0.100	0.200	0.500	1.00
PCB-1232 Peak 4	BNB	Lin1	823086 24651919	1638459	3454696	8005946	17213553	0.0500 1.50	0.100	0.200	0.500	1.00
PCB-1232 Peak 5	BNB	Lin1	1064080 16648621	1340861	2942167	6142904	11772827	0.0500 1.50	0.100	0.200	0.500	1.00
PCB-1262 Peak 1	BNB	Lin1	2035702 60159421	4252479	7940936	20601405	42574313	0.0500 1.50	0.100	0.200	0.500	1.00
PCB-1262 Peak 2	BNB	Lin1	3009119 87956962	6172807	11752629	29943896	62324215	0.0500 1.50	0.100	0.200	0.500	1.00
PCB-1262 Peak 3	BNB	Lin1	2696696 77282400	5749168	10490755	26343543	54734336	0.0500 1.50	0.100	0.200	0.500	1.00
PCB-1262 Peak 4	BNB	Lin1	5245011 161668449	11078143	20885509	54104359	113755925	0.0500 1.50	0.100	0.200	0.500	1.00
PCB-1262 Peak 5	BNB	Lin1	3881792 113580394	7957196	14882461	38388066	79649719	0.0500 1.50	0.100	0.200	0.500	1.00

Curve Type Legend:
Lin1 = Linear 1/conc ISTD

FORM VI
PCBS BY INTERNAL STANDARD - INITIAL CALIBRATION DATA
CURVE EVALUATION

Lab Name: TestAmerica Canton Job No.: 240-81698-1 Analy Batch No.: 285960

SDG No.:

Instrument ID: A2HP4 GC Column: CLP-1 (0.53 ID: 0.53(mm) Heated Purge: (Y/N) N

Calibration Start Date: 07/05/2017 16:52 Calibration End Date: 07/05/2017 18:29 Calibration ID: 40545

Calibration Files:

LEVEL:	LAB SAMPLE ID:	LAB FILE ID:
Level 1	STD005 240-285960/10	P40705010.D
Level 2	STD01 240-285960/11	P40705011.D
Level 3	STD02 240-285960/12	P40705012.D
Level 4	STD05 240-285960/13	P40705013.D
Level 5	STD1 240-285960/14	P40705014.D
Level 6	STD15 240-285960/15	P40705015.D

ANALYTE	RRF					CURVE TYPE	COEFFICIENT			#	MIN RRF	%RSD	#	MAX %RSD	R^2 OR COD	#	MIN R^2 OR COD
	LVL 1 LVL 6	LVL 2	LVL 3	LVL 4	LVL 5		B	M1	M2								
PCB-1242 Peak 1	0.0306 0.0209	0.0272	0.0252	0.0236	0.0228	Lin1	0.0006	0.0214							0.9970		0.9900
PCB-1242 Peak 2	0.0466 0.0383	0.0424	0.0413	0.0383	0.0368	Lin1	0.0005	0.0374							0.9990		0.9900
PCB-1242 Peak 3	0.0880 0.0855	0.0832	0.0807	0.0782	0.0771	Lin1	0.0001	0.0814							0.9970		0.9900
PCB-1242 Peak 4	0.0366 0.0362	0.0374	0.0363	0.0342	0.0334	Lin1	0.0001	0.0349							0.9980		0.9900
PCB-1242 Peak 5	0.0158 0.0148	0.0152	0.0149	0.0139	0.0135	Lin1	0.0001	0.0142							0.9980		0.9900
PCB-1268 Peak 1	0.1972 0.1993	0.1683	0.1695	0.1632	0.1612	Ave		0.1764				9.7		20.0			
PCB-1268 Peak 2	0.1912 0.1909	0.1647	0.1657	0.1582	0.1540	Ave		0.1708				9.5		20.0			
PCB-1268 Peak 3	0.1651 0.1643	0.1392	0.1395	0.1339	0.1318	Ave		0.1456				10.4		20.0			
PCB-1268 Peak 4	0.0683 0.0690	0.0554	0.0584	0.0557	0.0552	Ave		0.0603				10.9		20.0			
PCB-1268 Peak 5	0.4870 0.4950	0.4053	0.4179	0.3979	0.3930	Ave		0.4327				10.6		20.0			

Note: The M1 coefficient is the same as Ave RRF for an Ave curve type.

FORM VI
PCBS BY INTERNAL STANDARD - INITIAL CALIBRATION DATA
RESPONSE AND CONCENTRATION

Lab Name: TestAmerica Canton Job No.: 240-81698-1 Analy Batch No.: 285960

SDG No.:

Instrument ID: A2HP4 GC Column: CLP-1 (0.53 ID: 0.53(mm) Heated Purge: (Y/N) N

Calibration Start Date: 07/05/2017 16:52 Calibration End Date: 07/05/2017 18:29 Calibration ID: 40545

Calibration Files:

LEVEL:	LAB SAMPLE ID:	LAB FILE ID:
Level 1	STD005 240-285960/10	P40705010.D
Level 2	STD01 240-285960/11	P40705011.D
Level 3	STD02 240-285960/12	P40705012.D
Level 4	STD05 240-285960/13	P40705013.D
Level 5	STD1 240-285960/14	P40705014.D
Level 6	STD15 240-285960/15	P40705015.D

ANALYTE	IS REF	CURVE TYPE	RESPONSE					CONCENTRATION (NG/UL)				
			LVL 1 LVL 6	LVL 2	LVL 3	LVL 4	LVL 5	LVL 1 LVL 6	LVL 2	LVL 3	LVL 4	LVL 5
PCB-1242 Peak 1	BNB	Lin1	1928433 40828698	3245161	6373343	14828952	28810063	0.0500 1.50	0.100	0.200	0.500	1.00
PCB-1242 Peak 2	BNB	Lin1	2934056 74983289	5071810	10455665	24100759	46460650	0.0500 1.50	0.100	0.200	0.500	1.00
PCB-1242 Peak 3	BNB	Lin1	5542783 167239457	9939540	20436897	49153463	97333290	0.0500 1.50	0.100	0.200	0.500	1.00
PCB-1242 Peak 4	BNB	Lin1	2303167 70789484	4473945	9208812	21520107	42177036	0.0500 1.50	0.100	0.200	0.500	1.00
PCB-1242 Peak 5	BNB	Lin1	994946 28957353	1814092	3763292	8755634	17081666	0.0500 1.50	0.100	0.200	0.500	1.00
PCB-1268 Peak 1	BNB	Ave	12426840 389989207	20108451	42948011	102543353	203571829	0.0500 1.50	0.100	0.200	0.500	1.00
PCB-1268 Peak 2	BNB	Ave	12045679 373494089	19682367	41982953	99403309	194500827	0.0500 1.50	0.100	0.200	0.500	1.00
PCB-1268 Peak 3	BNB	Ave	10401675 321610931	16638730	35348886	84162235	166413929	0.0500 1.50	0.100	0.200	0.500	1.00
PCB-1268 Peak 4	BNB	Ave	4302698 135117127	6623639	14791105	34992993	69733708	0.0500 1.50	0.100	0.200	0.500	1.00
PCB-1268 Peak 5	BNB	Ave	30685644 968583695	48442165	105878735	250073581	496308632	0.0500 1.50	0.100	0.200	0.500	1.00

Curve Type Legend:

Ave = Average ISTD
Lin1 = Linear 1/conc ISTD

FORM VI
PCBS BY INTERNAL STANDARD - INITIAL CALIBRATION DATA
CURVE EVALUATION

Lab Name: TestAmerica Canton Job No.: 240-81698-1 Analy Batch No.: 285960

SDG No.:

Instrument ID: A2HP4 GC Column: CLP-2 (0.53 ID: 0.53(mm) Heated Purge: (Y/N) N

Calibration Start Date: 07/05/2017 16:52 Calibration End Date: 07/05/2017 18:29 Calibration ID: 40546

Calibration Files:

LEVEL:	LAB SAMPLE ID:	LAB FILE ID:
Level 1	STD005 240-285960/10	P40705010.D
Level 2	STD01 240-285960/11	P40705011.D
Level 3	STD02 240-285960/12	P40705012.D
Level 4	STD05 240-285960/13	P40705013.D
Level 5	STD1 240-285960/14	P40705014.D
Level 6	STD15 240-285960/15	P40705015.D

ANALYTE	RRF					CURVE TYPE	COEFFICIENT			#	MIN RRF	%RSD	#	MAX %RSD	R^2 OR COD	#	MIN R^2 OR COD
	LVL 1 LVL 6	LVL 2	LVL 3	LVL 4	LVL 5		B	M1	M2								
PCB-1242 Peak 1	0.0253 0.0198	0.0250	0.0238	0.0220	0.0212	Lin1	0.0004	0.0203							0.9980		0.9900
PCB-1242 Peak 2	0.0437 0.0376	0.0422	0.0404	0.0378	0.0366	Lin1	0.0004	0.0370							1.0000		0.9900
PCB-1242 Peak 3	0.0838 0.0818	0.0770	0.0756	0.0742	0.0736	Lin1	0	0.0777							0.9970		0.9900
PCB-1242 Peak 4	0.0348 0.0322	0.0323	0.0316	0.0305	0.0299	Lin1	0.0001	0.0311							0.9980		0.9900
PCB-1242 Peak 5	0.0379 0.0257	0.0292	0.0266	0.0236	0.0231	Lin1	0.0006	0.0239							0.9960		0.9900
PCB-1268 Peak 1	0.1569 0.1696	0.1320	0.1334	0.1307	0.1330	Ave		0.1426				11.6		20.0			
PCB-1268 Peak 2	0.1535 0.1631	0.1296	0.1298	0.1280	0.1286	Ave		0.1388				11.1		20.0			
PCB-1268 Peak 3	0.1340 0.1393	0.1103	0.1104	0.1078	0.1093	Ave		0.1185				12.0		20.0			
PCB-1268 Peak 4	0.0562 0.0568	0.0464	0.0464	0.0446	0.0447	Ave		0.0492				11.6		20.0			
PCB-1268 Peak 5	0.4153 0.4539	0.3412	0.3505	0.3427	0.3496	Ave		0.3755				12.7		20.0			

Note: The M1 coefficient is the same as Ave RRF for an Ave curve type.

FORM VI
PCBS BY INTERNAL STANDARD - INITIAL CALIBRATION DATA
RESPONSE AND CONCENTRATION

Lab Name: TestAmerica Canton Job No.: 240-81698-1 Analy Batch No.: 285960

SDG No.:

Instrument ID: A2HP4 GC Column: CLP-2 (0.53 ID: 0.53(mm) Heated Purge: (Y/N) N

Calibration Start Date: 07/05/2017 16:52 Calibration End Date: 07/05/2017 18:29 Calibration ID: 40546

Calibration Files:

LEVEL:	LAB SAMPLE ID:	LAB FILE ID:
Level 1	STD005 240-285960/10	P40705010.D
Level 2	STD01 240-285960/11	P40705011.D
Level 3	STD02 240-285960/12	P40705012.D
Level 4	STD05 240-285960/13	P40705013.D
Level 5	STD1 240-285960/14	P40705014.D
Level 6	STD15 240-285960/15	P40705015.D

ANALYTE	IS REF	CURVE TYPE	RESPONSE					CONCENTRATION (NG/UL)				
			LVL 1 LVL 6	LVL 2	LVL 3	LVL 4	LVL 5	LVL 1 LVL 6	LVL 2	LVL 3	LVL 4	LVL 5
PCB-1242 Peak 1	BNB	Lin1	1543329 37057380	2884543	5822154	13227205	25480888	0.0500 1.50	0.100	0.200	0.500	1.00
PCB-1242 Peak 2	BNB	Lin1	2662792 70445242	4869778	9869610	22688537	44053700	0.0500 1.50	0.100	0.200	0.500	1.00
PCB-1242 Peak 3	BNB	Lin1	5106910 152985822	8888294	18486727	44549343	88639670	0.0500 1.50	0.100	0.200	0.500	1.00
PCB-1242 Peak 4	BNB	Lin1	2122669 60311946	3729930	7714842	18331187	36040758	0.0500 1.50	0.100	0.200	0.500	1.00
PCB-1242 Peak 5	BNB	Lin1	2311584 48023862	3374872	6501198	14205335	27827597	0.0500 1.50	0.100	0.200	0.500	1.00
PCB-1268 Peak 1	BNB	Ave	9564359 317411655	15229009	32616217	78522238	160119883	0.0500 1.50	0.100	0.200	0.500	1.00
PCB-1268 Peak 2	BNB	Ave	9351570 305200962	14955386	31745047	76878008	154777145	0.0500 1.50	0.100	0.200	0.500	1.00
PCB-1268 Peak 3	BNB	Ave	8168528 260559280	12726824	26982959	64753000	131582282	0.0500 1.50	0.100	0.200	0.500	1.00
PCB-1268 Peak 4	BNB	Ave	3425373 106201873	5355367	11333656	26776616	53860161	0.0500 1.50	0.100	0.200	0.500	1.00
PCB-1268 Peak 5	BNB	Ave	25308365 849316464	39363143	85700910	205864145	420783362	0.0500 1.50	0.100	0.200	0.500	1.00

Curve Type Legend:

Ave = Average ISTD
Lin1 = Linear 1/conc ISTD

FORM VI
PCBS BY INTERNAL STANDARD - INITIAL CALIBRATION DATA
CURVE EVALUATION

Lab Name: TestAmerica Canton Job No.: 240-81698-1 Analy Batch No.: 285960

SDG No.:

Instrument ID: A2HP4 GC Column: CLP-1 (0.53 ID: 0.53(mm) Heated Purge: (Y/N) N

Calibration Start Date: 07/05/2017 18:49 Calibration End Date: 07/05/2017 20:28 Calibration ID: 40551

Calibration Files:

LEVEL:	LAB SAMPLE ID:	LAB FILE ID:
Level 1	STD005 240-285960/16	P40705016.D
Level 2	STD01 240-285960/17	P40705017.D
Level 3	STD02 240-285960/18	P40705018.D
Level 4	STD05 240-285960/19	P40705019.D
Level 5	STD1 240-285960/20	P40705020.D
Level 6	STD15 240-285960/21	P40705021.D

ANALYTE	RRF					CURVE TYPE	COEFFICIENT			#	MIN RRF	%RSD	#	MAX %RSD	R^2 OR COD	#	MIN R^2 OR COD
	LVL 1 LVL 6	LVL 2	LVL 3	LVL 4	LVL 5		B	M1	M2								
PCB-1248 Peak 1	0.0212 0.0166	0.0203	0.0196	0.0178	0.0168	Lin1	0.0003	0.0166							0.9990		0.9900
PCB-1248 Peak 2	0.0489 0.0442	0.0504	0.0462	0.0452	0.0434	Lin1	0.0004	0.0437							1.0000		0.9900
PCB-1248 Peak 3	0.0381 0.0397	0.0380	0.0356	0.0401	0.0387	Lin1	0	0.0394							0.9990		0.9900
PCB-1248 Peak 4	0.0355 0.0330	0.0346	0.0315	0.0329	0.0322	Lin1	0.0001	0.0325							1.0000		0.9900
PCB-1248 Peak 5	0.0199 0.0216	0.0215	0.0193	0.0208	0.0205	Lin1	0	0.0211							0.9990		0.9900

Note: The M1 coefficient is the same as Ave RRF for an Ave curve type.

FORM VI
PCBS BY INTERNAL STANDARD - INITIAL CALIBRATION DATA
RESPONSE AND CONCENTRATION

Lab Name: TestAmerica Canton Job No.: 240-81698-1 Analy Batch No.: 285960

SDG No.:

Instrument ID: A2HP4 GC Column: CLP-1 (0.53 ID: 0.53(mm) Heated Purge: (Y/N) N

Calibration Start Date: 07/05/2017 18:49 Calibration End Date: 07/05/2017 20:28 Calibration ID: 40551

Calibration Files:

LEVEL:	LAB SAMPLE ID:	LAB FILE ID:
Level 1	STD005 240-285960/16	P40705016.D
Level 2	STD01 240-285960/17	P40705017.D
Level 3	STD02 240-285960/18	P40705018.D
Level 4	STD05 240-285960/19	P40705019.D
Level 5	STD1 240-285960/20	P40705020.D
Level 6	STD15 240-285960/21	P40705021.D

ANALYTE	IS REF	CURVE TYPE	RESPONSE					CONCENTRATION (NG/UL)				
			LVL 1 LVL 6	LVL 2	LVL 3	LVL 4	LVL 5	LVL 1 LVL 6	LVL 2	LVL 3	LVL 4	LVL 5
PCB-1248 Peak 1	BNB	Lin1	1367386 33168256	2619439	4942653	11463150	21757796	0.0500 1.50	0.100	0.200	0.500	1.00
PCB-1248 Peak 2	BNB	Lin1	3161236 88263917	6504588	11647726	29138903	56123501	0.0500 1.50	0.100	0.200	0.500	1.00
PCB-1248 Peak 3	BNB	Lin1	2459249 79290185	4907668	8980970	25864879	50067388	0.0500 1.50	0.100	0.200	0.500	1.00
PCB-1248 Peak 4	BNB	Lin1	2294838 65913914	4468752	7943300	21170212	41634408	0.0500 1.50	0.100	0.200	0.500	1.00
PCB-1248 Peak 5	BNB	Lin1	1282875 43120520	2773645	4863301	13387801	26566788	0.0500 1.50	0.100	0.200	0.500	1.00

Curve Type Legend:
Lin1 = Linear 1/conc ISTD

FORM VI
PCBS BY INTERNAL STANDARD - INITIAL CALIBRATION DATA
CURVE EVALUATION

Lab Name: TestAmerica Canton Job No.: 240-81698-1 Analy Batch No.: 285960

SDG No.:

Instrument ID: A2HP4 GC Column: CLP-2 (0.53 ID: 0.53(mm) Heated Purge: (Y/N) N

Calibration Start Date: 07/05/2017 18:49 Calibration End Date: 07/05/2017 20:28 Calibration ID: 40552

Calibration Files:

LEVEL:	LAB SAMPLE ID:	LAB FILE ID:
Level 1	STD005 240-285960/16	P40705016.D
Level 2	STD01 240-285960/17	P40705017.D
Level 3	STD02 240-285960/18	P40705018.D
Level 4	STD05 240-285960/19	P40705019.D
Level 5	STD1 240-285960/20	P40705020.D
Level 6	STD15 240-285960/21	P40705021.D

ANALYTE	RRF					CURVE TYPE	COEFFICIENT			#	MIN RRF	%RSD	#	MAX %RSD	R^2 OR COD	#	MIN R^2 OR COD
	LVL 1 LVL 6	LVL 2	LVL 3	LVL 4	LVL 5		B	M1	M2								
PCB-1248 Peak 1	0.0199 0.0163	0.0195	0.0186	0.0176	0.0168	Lin1	0.0003	0.0164							0.9990		0.9900
PCB-1248 Peak 2	0.0452 0.0421	0.0452	0.0420	0.0422	0.0412	Lin1	0.0002	0.0416							1.0000		0.9900
PCB-1248 Peak 3	0.0424 0.0314	0.0370	0.0344	0.0328	0.0313	Lin1	0.0006	0.0310							1.0000		0.9900
PCB-1248 Peak 4	0.0582 0.0394	0.0398	0.0388	0.0398	0.0383	Lin1	0.0006	0.0382							0.9980		0.9900
PCB-1248 Peak 5	0.0198 0.0197	0.0180	0.0181	0.0199	0.0191	Lin1	0	0.0195							0.9990		0.9900

Note: The M1 coefficient is the same as Ave RRF for an Ave curve type.

FORM VI
PCBS BY INTERNAL STANDARD - INITIAL CALIBRATION DATA
RESPONSE AND CONCENTRATION

Lab Name: TestAmerica Canton Job No.: 240-81698-1 Analy Batch No.: 285960

SDG No.:

Instrument ID: A2HP4 GC Column: CLP-2 (0.53 ID: 0.53(mm) Heated Purge: (Y/N) N

Calibration Start Date: 07/05/2017 18:49 Calibration End Date: 07/05/2017 20:28 Calibration ID: 40552

Calibration Files:

LEVEL:	LAB SAMPLE ID:	LAB FILE ID:
Level 1	STD005 240-285960/16	P40705016.D
Level 2	STD01 240-285960/17	P40705017.D
Level 3	STD02 240-285960/18	P40705018.D
Level 4	STD05 240-285960/19	P40705019.D
Level 5	STD1 240-285960/20	P40705020.D
Level 6	STD15 240-285960/21	P40705021.D

ANALYTE	IS REF	CURVE TYPE	RESPONSE					CONCENTRATION (NG/UL)				
			LVL 1 LVL 6	LVL 2	LVL 3	LVL 4	LVL 5	LVL 1 LVL 6	LVL 2	LVL 3	LVL 4	LVL 5
PCB-1248 Peak 1	BNB	Lin1	1233527 31169557	2417369	4485519	10843877	20835715	0.0500 1.50	0.100	0.200	0.500	1.00
PCB-1248 Peak 2	BNB	Lin1	2796862 80482178	5587632	10150826	26043001	51288950	0.0500 1.50	0.100	0.200	0.500	1.00
PCB-1248 Peak 3	BNB	Lin1	2626730 60142827	4575594	8322707	20259247	38935716	0.0500 1.50	0.100	0.200	0.500	1.00
PCB-1248 Peak 4	BNB	Lin1	3604307 75327999	4927408	9383746	24579628	47671901	0.0500 1.50	0.100	0.200	0.500	1.00
PCB-1248 Peak 5	BNB	Lin1	1225538 37687166	2231302	4380840	12286826	23709971	0.0500 1.50	0.100	0.200	0.500	1.00

Curve Type Legend:
Lin1 = Linear 1/conc ISTD

FORM VI
PCBS BY INTERNAL STANDARD - INITIAL CALIBRATION DATA
CURVE EVALUATION

Lab Name: TestAmerica Canton Job No.: 240-81698-1 Analy Batch No.: 285960

SDG No.:

Instrument ID: A2HP4 GC Column: CLP-1 (0.53 ID: 0.53(mm) Heated Purge: (Y/N) N

Calibration Start Date: 07/05/2017 20:47 Calibration End Date: 07/05/2017 22:26 Calibration ID: 40557

Calibration Files:

LEVEL:	LAB SAMPLE ID:	LAB FILE ID:
Level 1	STD005 240-285960/22	P40705022.D
Level 2	STD01 240-285960/23	P40705023.D
Level 3	STD02 240-285960/24	P40705024.D
Level 4	STD05 240-285960/25	P40705025.D
Level 5	STD1 240-285960/26	P40705026.D
Level 6	STD15 240-285960/27	P40705027.D

ANALYTE	RRF					CURVE TYPE	COEFFICIENT			#	MIN RRF	%RSD	#	MAX %RSD	R^2 OR COD	#	MIN R^2 OR COD
	LVL 1 LVL 6	LVL 2	LVL 3	LVL 4	LVL 5		B	M1	M2								
PCB-1221 Peak 1	0.0121 0.0104	0.0124	0.0118	0.0109	0.0105	Lin1	0.0001	0.0104							0.9990		0.9900
PCB-1221 Peak 2	0.0080 0.0067	0.0077	0.0078	0.0072	0.0068	Lin1	0.0001	0.0068							0.9990		0.9900
PCB-1221 Peak 3	0.0400 0.0256	0.0337	0.0305	0.0270	0.0257	Lin1	0.0008	0.0251							1.0000		0.9900
PCB-1254 Peak 1	0.0542 0.0465	0.0513	0.0524	0.0471	0.0462	Lin1	0.0005	0.0462							0.9990		0.9900
PCB-1254 Peak 2	0.0683 0.0651	0.0665	0.0708	0.0651	0.0647	Lin1	0.0003	0.0649							1.0000		0.9900
PCB-1254 Peak 3	0.0186 0.0490	0.0511	0.0570	0.0526	0.0481	Lin1	-0.001	0.0506							0.9920		0.9900
PCB-1254 Peak 4	0.0473 0.0456	0.0470	0.0505	0.0454	0.0450	Lin1	0.0002	0.0454							0.9990		0.9900
PCB-1254 Peak 5	0.0665 0.0674	0.0677	0.0732	0.0664	0.0662	Lin1	0.0001	0.0670							0.9990		0.9900

Note: The M1 coefficient is the same as Ave RRF for an Ave curve type.

FORM VI
PCBS BY INTERNAL STANDARD - INITIAL CALIBRATION DATA
RESPONSE AND CONCENTRATION

Lab Name: TestAmerica Canton Job No.: 240-81698-1 Analy Batch No.: 285960

SDG No.:

Instrument ID: A2HP4 GC Column: CLP-1 (0.53 ID: 0.53(mm) Heated Purge: (Y/N) N

Calibration Start Date: 07/05/2017 20:47 Calibration End Date: 07/05/2017 22:26 Calibration ID: 40557

Calibration Files:

LEVEL:	LAB SAMPLE ID:	LAB FILE ID:
Level 1	STD005 240-285960/22	P40705022.D
Level 2	STD01 240-285960/23	P40705023.D
Level 3	STD02 240-285960/24	P40705024.D
Level 4	STD05 240-285960/25	P40705025.D
Level 5	STD1 240-285960/26	P40705026.D
Level 6	STD15 240-285960/27	P40705027.D

ANALYTE	IS REF	CURVE TYPE	RESPONSE					CONCENTRATION (NG/UL)				
			LVL 1 LVL 6	LVL 2	LVL 3	LVL 4	LVL 5	LVL 1 LVL 6	LVL 2	LVL 3	LVL 4	LVL 5
PCB-1221 Peak 1	BNB	Lin1	761122 19984597	1621893	3118904	7340020	13797268	0.0500 1.50	0.100	0.200	0.500	1.00
PCB-1221 Peak 2	BNB	Lin1	502692 12909699	1008879	2070821	4829887	8978852	0.0500 1.50	0.100	0.200	0.500	1.00
PCB-1221 Peak 3	BNB	Lin1	2516978 49246443	4389111	8051986	18163040	33785924	0.0500 1.50	0.100	0.200	0.500	1.00
PCB-1254 Peak 1	BNB	Lin1	3409195 89388657	6685036	13835771	31722090	60750641	0.0500 1.50	0.100	0.200	0.500	1.00
PCB-1254 Peak 2	BNB	Lin1	4294899 125019939	8669213	18684421	43849716	85094707	0.0500 1.50	0.100	0.200	0.500	1.00
PCB-1254 Peak 3	BNB	Lin1	1171949 94089039	6660328	15046906	35438149	63198483	0.0500 1.50	0.100	0.200	0.500	1.00
PCB-1254 Peak 4	BNB	Lin1	2976740 87655205	6121309	13328496	30576265	59110101	0.0500 1.50	0.100	0.200	0.500	1.00
PCB-1254 Peak 5	BNB	Lin1	4180478 129421722	8823910	19329764	44707863	87004128	0.0500 1.50	0.100	0.200	0.500	1.00

Curve Type Legend:

Lin1 = Linear 1/conc ISTD

FORM VI
PCBS BY INTERNAL STANDARD - INITIAL CALIBRATION DATA
CURVE EVALUATION

Lab Name: TestAmerica Canton Job No.: 240-81698-1 Analy Batch No.: 285960

SDG No.:

Instrument ID: A2HP4 GC Column: CLP-2 (0.53 ID: 0.53(mm) Heated Purge: (Y/N) N

Calibration Start Date: 07/05/2017 20:47 Calibration End Date: 07/05/2017 22:26 Calibration ID: 40558

Calibration Files:

LEVEL:	LAB SAMPLE ID:	LAB FILE ID:
Level 1	STD005 240-285960/22	P40705022.D
Level 2	STD01 240-285960/23	P40705023.D
Level 3	STD02 240-285960/24	P40705024.D
Level 4	STD05 240-285960/25	P40705025.D
Level 5	STD1 240-285960/26	P40705026.D
Level 6	STD15 240-285960/27	P40705027.D

ANALYTE	RRF					CURVE TYPE	COEFFICIENT			#	MIN RRF	%RSD	#	MAX %RSD	R^2 OR COD	#	MIN R^2 OR COD
	LVL 1 LVL 6	LVL 2	LVL 3	LVL 4	LVL 5		B	M1	M2								
PCB-1221 Peak 1	0.0140 0.0102	0.0123	0.0121	0.0108	0.0102	Lin1	0.0002	0.0101							0.9990		0.9900
PCB-1221 Peak 2	0.0083 0.0066	0.0079	0.0078	0.0071	0.0066	Lin1	0.0001	0.0066							0.9990		0.9900
PCB-1221 Peak 3	0.0310 0.0245	0.0297	0.0285	0.0259	0.0246	Lin1	0.0005	0.0244							0.9990		0.9900
PCB-1254 Peak 1	0.0386 0.0356	0.0370	0.0387	0.0349	0.0350	Lin1	0.0002	0.0352							0.9990		0.9900
PCB-1254 Peak 2	0.0444 0.0413	0.0424	0.0448	0.0402	0.0405	Lin1	0.0002	0.0407							0.9990		0.9900
PCB-1254 Peak 3	0.0612 0.0574	0.0584	0.0617	0.0556	0.0564	Lin1	0.0003	0.0567							0.9990		0.9900
PCB-1254 Peak 4	0.0445 0.0422	0.0428	0.0448	0.0405	0.0415	Lin1	0.0002	0.0416							0.9990		0.9900
PCB-1254 Peak 5	0.0642 0.0565	0.0579	0.0606	0.0549	0.0552	Lin1	0.0004	0.0555							0.9990		0.9900

Note: The M1 coefficient is the same as Ave RRF for an Ave curve type.

FORM VI
PCBS BY INTERNAL STANDARD - INITIAL CALIBRATION DATA
RESPONSE AND CONCENTRATION

Lab Name: TestAmerica Canton Job No.: 240-81698-1 Analy Batch No.: 285960

SDG No.:

Instrument ID: A2HP4 GC Column: CLP-2 (0.53 ID: 0.53(mm) Heated Purge: (Y/N) N

Calibration Start Date: 07/05/2017 20:47 Calibration End Date: 07/05/2017 22:26 Calibration ID: 40558

Calibration Files:

LEVEL:	LAB SAMPLE ID:	LAB FILE ID:
Level 1	STD005 240-285960/22	P40705022.D
Level 2	STD01 240-285960/23	P40705023.D
Level 3	STD02 240-285960/24	P40705024.D
Level 4	STD05 240-285960/25	P40705025.D
Level 5	STD1 240-285960/26	P40705026.D
Level 6	STD15 240-285960/27	P40705027.D

ANALYTE	IS REF	CURVE TYPE	RESPONSE					CONCENTRATION (NG/UL)				
			LVL 1 LVL 6	LVL 2	LVL 3	LVL 4	LVL 5	LVL 1 LVL 6	LVL 2	LVL 3	LVL 4	LVL 5
PCB-1221 Peak 1	BNB	Lin1	836362 18797841	1540481	3038377	6968987	12899731	0.0500 1.50	0.100	0.200	0.500	1.00
PCB-1221 Peak 2	BNB	Lin1	494575 12104691	990821	1953848	4574792	8388726	0.0500 1.50	0.100	0.200	0.500	1.00
PCB-1221 Peak 3	BNB	Lin1	1857601 45081453	3707209	7164062	16765387	31042249	0.0500 1.50	0.100	0.200	0.500	1.00
PCB-1254 Peak 1	BNB	Lin1	2311681 65590362	4623255	9744113	22591434	44222929	0.0500 1.50	0.100	0.200	0.500	1.00
PCB-1254 Peak 2	BNB	Lin1	2657576 75984211	5298708	11264839	25954904	51096909	0.0500 1.50	0.100	0.200	0.500	1.00
PCB-1254 Peak 3	BNB	Lin1	3667548 105626185	7301713	15509287	35948916	71294653	0.0500 1.50	0.100	0.200	0.500	1.00
PCB-1254 Peak 4	BNB	Lin1	2667707 77619125	5352108	11274598	26198762	52417009	0.0500 1.50	0.100	0.200	0.500	1.00
PCB-1254 Peak 5	BNB	Lin1	3844634 103976429	7237744	15234495	35483193	69666297	0.0500 1.50	0.100	0.200	0.500	1.00

Curve Type Legend:
Lin1 = Linear 1/conc ISTD

FORM VI
PCBS BY INTERNAL STANDARD - INITIAL CALIBRATION DATA
CURVE EVALUATION

Lab Name: TestAmerica Canton Job No.: 240-81698-1 Analy Batch No.: 285960

SDG No.:

Instrument ID: A2HP4 GC Column: CLP-1 (0.53 ID: 0.53(mm) Heated Purge: (Y/N) N

Calibration Start Date: 07/05/2017 22:46 Calibration End Date: 07/06/2017 00:24 Calibration ID: 40563

Calibration Files:

LEVEL:	LAB SAMPLE ID:	LAB FILE ID:
Level 1	STD005 240-285960/28	P40705028.D
Level 2	STD01 240-285960/29	P40705029.D
Level 3	STD02 240-285960/30	P40705030.D
Level 4	STD05 240-285960/31	P40705031.D
Level 5	STD1 240-285960/32	P40705032.D
Level 6	STD15 240-285960/33	P40705033.D

ANALYTE	RRF					CURVE TYPE	COEFFICIENT			#	MIN RRF	%RSD	#	MAX %RSD	R^2 OR COD	#	MIN R^2 OR COD
	LVL 1 LVL 6	LVL 2	LVL 3	LVL 4	LVL 5		B	M1	M2								
PCB-1016 Peak 1	0.0421 0.0224	0.0293	0.0255	0.0253	0.0226	Lin1	0.0009	0.0219							0.9980		0.9900
PCB-1016 Peak 2	0.0530 0.0405	0.0510	0.0476	0.0460	0.0424	Lin1	0.0008	0.0413							0.9980		0.9900
PCB-1016 Peak 3	0.1042 0.0920	0.1026	0.0987	0.0992	0.0947	Lin1	0.0008	0.0933							0.9990		0.9900
PCB-1016 Peak 4	0.0445 0.0389	0.0451	0.0430	0.0424	0.0399	Lin1	0.0004	0.0395							0.9990		0.9900
PCB-1016 Peak 5	0.0193 0.0162	0.0191	0.0180	0.0175	0.0163	Lin1	0.0002	0.0163							0.9990		0.9900
PCB-1260 Peak 1	0.0670 0.0570	0.0647	0.0615	0.0617	0.0591	Lin1	0.0006	0.0579							0.9990		0.9900
PCB-1260 Peak 2	0.1248 0.0908	0.1173	0.1000	0.1001	0.0953	Lin1	0.0020	0.0918							0.9990		0.9900
PCB-1260 Peak 3	0.1136 0.0999	0.1073	0.1082	0.1094	0.1050	Lin1	0.0007	0.1025							0.9990		0.9900
PCB-1260 Peak 4	0.1506 0.1257	0.1428	0.1415	0.1386	0.1324	Lin1	0.0015	0.1287							0.9980		0.9900
PCB-1260 Peak 5	0.0688 0.0641	0.0671	0.0661	0.0689	0.0656	Lin1	0.0003	0.0651							0.9990		0.9900
Tetrachloro-m-xylene	1.2204 1.0207	1.1938	1.1429	1.1325	1.0769	Ave		1.1312				6.5		20.0			
DCB Decachlorobiphenyl	1.1113 0.8605	1.0579	0.9951	0.9608	0.9151	Ave		0.9835				9.4		20.0			

Note: The M1 coefficient is the same as Ave RRF for an Ave curve type.

FORM VI
PCBS BY INTERNAL STANDARD - INITIAL CALIBRATION DATA
RESPONSE AND CONCENTRATION

Lab Name: TestAmerica Canton Job No.: 240-81698-1 Analy Batch No.: 285960

SDG No.:

Instrument ID: A2HP4 GC Column: CLP-1 (0.53 ID: 0.53(mm) Heated Purge: (Y/N) N

Calibration Start Date: 07/05/2017 22:46 Calibration End Date: 07/06/2017 00:24 Calibration ID: 40563

Calibration Files:

LEVEL:	LAB SAMPLE ID:	LAB FILE ID:
Level 1	STD005 240-285960/28	P40705028.D
Level 2	STD01 240-285960/29	P40705029.D
Level 3	STD02 240-285960/30	P40705030.D
Level 4	STD05 240-285960/31	P40705031.D
Level 5	STD1 240-285960/32	P40705032.D
Level 6	STD15 240-285960/33	P40705033.D

ANALYTE	IS REF	CURVE TYPE	RESPONSE					CONCENTRATION (NG/UL)				
			LVL 1 LVL 6	LVL 2	LVL 3	LVL 4	LVL 5	LVL 1 LVL 6	LVL 2	LVL 3	LVL 4	LVL 5
PCB-1016 Peak 1	BNB	Lin1	3030704 48168066	4067578	7233297	17317917	31838712	0.0500 1.50	0.100	0.200	0.500	1.00
PCB-1016 Peak 2	BNB	Lin1	3820086 87168263	7065463	13484234	31466057	59592780	0.0500 1.50	0.100	0.200	0.500	1.00
PCB-1016 Peak 3	BNB	Lin1	7504238 197803450	14218636	27944204	67906191	133132520	0.0500 1.50	0.100	0.200	0.500	1.00
PCB-1016 Peak 4	BNB	Lin1	3206777 83744653	6256015	12187142	29001094	56143183	0.0500 1.50	0.100	0.200	0.500	1.00
PCB-1016 Peak 5	BNB	Lin1	1393220 34838800	2645848	5091072	11972669	22939862	0.0500 1.50	0.100	0.200	0.500	1.00
PCB-1260 Peak 1	BNB	Lin1	4830600 122572085	8968108	17415822	42249026	83137354	0.0500 1.50	0.100	0.200	0.500	1.00
PCB-1260 Peak 2	BNB	Lin1	8992580 195378647	16253585	28304390	68547958	133913202	0.0500 1.50	0.100	0.200	0.500	1.00
PCB-1260 Peak 3	BNB	Lin1	8183915 214955274	14869366	30629545	74874410	147674900	0.0500 1.50	0.100	0.200	0.500	1.00
PCB-1260 Peak 4	BNB	Lin1	10847783 270469542	19797329	40072730	94872370	186075626	0.0500 1.50	0.100	0.200	0.500	1.00
PCB-1260 Peak 5	BNB	Lin1	4954162 137835363	9294773	18705778	47161993	92243229	0.0500 1.50	0.100	0.200	0.500	1.00
Tetrachloro-m-xylene	BNB	Ave	4396307 146360888	8272803	16179267	38767813	75697050	0.00250 0.100	0.00500	0.0100	0.0250	0.0500
DCB Decachlorobiphenyl	BNB	Ave	4003365 123388958	7331253	14087490	32891392	64319418	0.00250 0.100	0.00500	0.0100	0.0250	0.0500

Curve Type Legend:

Ave = Average ISTD
Lin1 = Linear 1/conc ISTD

FORM VI
PCBS BY INTERNAL STANDARD - INITIAL CALIBRATION DATA
CURVE EVALUATION

Lab Name: TestAmerica Canton Job No.: 240-81698-1 Analy Batch No.: 285960

SDG No.:

Instrument ID: A2HP4 GC Column: CLP-2 (0.53 ID: 0.53(mm) Heated Purge: (Y/N) N

Calibration Start Date: 07/05/2017 22:46 Calibration End Date: 07/06/2017 00:24 Calibration ID: 40564

Calibration Files:

LEVEL:	LAB SAMPLE ID:	LAB FILE ID:
Level 1	STD005 240-285960/28	P40705028.D
Level 2	STD01 240-285960/29	P40705029.D
Level 3	STD02 240-285960/30	P40705030.D
Level 4	STD05 240-285960/31	P40705031.D
Level 5	STD1 240-285960/32	P40705032.D
Level 6	STD15 240-285960/33	P40705033.D

ANALYTE	RRF					CURVE TYPE	COEFFICIENT			#	MIN RRF	%RSD	#	MAX %RSD	R^2 OR COD	#	MIN R^2 OR COD
	LVL 1 LVL 6	LVL 2	LVL 3	LVL 4	LVL 5		B	M1	M2								
PCB-1016 Peak 1	0.0265 0.0208	0.0250	0.0236	0.0231	0.0214	Lin1	0.0004	0.0211							0.9990		0.9900
PCB-1016 Peak 2	0.0499 0.0407	0.0489	0.0463	0.0452	0.0423	Lin1	0.0006	0.0414							0.9980		0.9900
PCB-1016 Peak 3	0.0978 0.0904	0.0962	0.0930	0.0953	0.0923	Lin1	0.0004	0.0914							1.0000		0.9900
PCB-1016 Peak 4	0.0383 0.0355	0.0386	0.0369	0.0374	0.0359	Lin1	0.0002	0.0357							1.0000		0.9900
PCB-1016 Peak 5	0.0396 0.0279	0.0343	0.0312	0.0307	0.0287	Lin1	0.0006	0.0280							0.9990		0.9900
PCB-1260 Peak 1	0.0607 0.0534	0.0587	0.0573	0.0571	0.0552	Lin1	0.0004	0.0542							0.9990		0.9900
PCB-1260 Peak 2	0.0689 0.0613	0.0666	0.0654	0.0657	0.0635	Lin1	0.0005	0.0623							0.9990		0.9900
PCB-1260 Peak 3	0.0968 0.0858	0.0918	0.0897	0.0908	0.0884	Lin1	0.0006	0.0869							1.0000		0.9900
PCB-1260 Peak 4	0.1176 0.1094	0.1144	0.1121	0.1152	0.1126	Lin1	0.0004	0.1110							1.0000		0.9900
PCB-1260 Peak 5	0.0825 0.0757	0.0803	0.0783	0.0800	0.0779	Lin1	0.0004	0.0767							1.0000		0.9900
Tetrachloro-m-xylene	1.1149 1.0289	1.0995	1.0553	1.0695	1.0493	Ave		1.0696				3.0		20.0			
DCB Decachlorobiphenyl	0.9741 0.7483	0.9211	0.8582	0.8247	0.7918	Ave		0.8530				9.8		20.0			

Note: The M1 coefficient is the same as Ave RRF for an Ave curve type.

FORM VI
PCBS BY INTERNAL STANDARD - INITIAL CALIBRATION DATA
RESPONSE AND CONCENTRATION

Lab Name: TestAmerica Canton Job No.: 240-81698-1 Analy Batch No.: 285960

SDG No.:

Instrument ID: A2HP4 GC Column: CLP-2 (0.53 ID: 0.53(mm) Heated Purge: (Y/N) N

Calibration Start Date: 07/05/2017 22:46 Calibration End Date: 07/06/2017 00:24 Calibration ID: 40564

Calibration Files:

LEVEL:	LAB SAMPLE ID:	LAB FILE ID:
Level 1	STD005 240-285960/28	P40705028.D
Level 2	STD01 240-285960/29	P40705029.D
Level 3	STD02 240-285960/30	P40705030.D
Level 4	STD05 240-285960/31	P40705031.D
Level 5	STD1 240-285960/32	P40705032.D
Level 6	STD15 240-285960/33	P40705033.D

ANALYTE	IS REF	CURVE TYPE	RESPONSE					CONCENTRATION (NG/UL)				
			LVL 1 LVL 6	LVL 2	LVL 3	LVL 4	LVL 5	LVL 1 LVL 6	LVL 2	LVL 3	LVL 4	LVL 5
PCB-1016 Peak 1	BNB	Lin1	1817862 42293062	3319481	6380476	15047250	28398279	0.0500 1.50	0.100	0.200	0.500	1.00
PCB-1016 Peak 2	BNB	Lin1	3428724 82660967	6496551	12549043	29479622	56152019	0.0500 1.50	0.100	0.200	0.500	1.00
PCB-1016 Peak 3	BNB	Lin1	6716613 183505834	12775909	25201477	62125669	122561288	0.0500 1.50	0.100	0.200	0.500	1.00
PCB-1016 Peak 4	BNB	Lin1	2628349 71945727	5124446	9985135	24355701	47616656	0.0500 1.50	0.100	0.200	0.500	1.00
PCB-1016 Peak 5	BNB	Lin1	2719787 56554240	4555707	8456294	19979121	38097808	0.0500 1.50	0.100	0.200	0.500	1.00
PCB-1260 Peak 1	BNB	Lin1	4170126 108429081	7790038	15515082	37212232	73344120	0.0500 1.50	0.100	0.200	0.500	1.00
PCB-1260 Peak 2	BNB	Lin1	4729117 124472790	8848692	17726169	42797514	84345021	0.0500 1.50	0.100	0.200	0.500	1.00
PCB-1260 Peak 3	BNB	Lin1	6642763 174043410	12189106	24290834	59152448	117396331	0.0500 1.50	0.100	0.200	0.500	1.00
PCB-1260 Peak 4	BNB	Lin1	8074533 222081826	15190471	30380069	75081659	149559473	0.0500 1.50	0.100	0.200	0.500	1.00
PCB-1260 Peak 5	BNB	Lin1	5662212 153568779	10667745	21201714	52129206	103419519	0.0500 1.50	0.100	0.200	0.500	1.00
Tetrachloro-m-xylene	BNB	Ave	3826499 139206999	7301693	14295539	34850156	69661449	0.00250 0.100	0.00500	0.0100	0.0250	0.0500
DCB Decachlorobiphenyl	BNB	Ave	3343393 101238788	6116806	11625675	26873090	52566746	0.00250 0.100	0.00500	0.0100	0.0250	0.0500

Curve Type Legend:

Ave = Average ISTD
Lin1 = Linear 1/conc ISTD

FORM VII
PCBS CONTINUING CALIBRATION DATA

Lab Name: TestAmerica Canton Job No.: 240-81698-1

SDG No.:

Lab Sample ID: ICV 240-281427/36 Calibration Date: 06/04/2017 21:24

Instrument ID: A2HP11 Calib Start Date: 06/04/2017 18:55

GC Column: CLP-1 (0.53mm) ID: 0.53(mm) Calib End Date: 06/04/2017 20:29

Lab File ID: P11060436.D Conc. Units: ng/uL

ANALYTE	CURVE TYPE	AVE RRF	RRF	MIN RRF	CALC AMOUNT	SPIKE AMOUNT	%D	MAX %D
PCB-1016 Peak 1	Lin1		0.0175		0.911	1.00	-8.9	20.0
PCB-1016 Peak 2	Lin1		0.0330		0.966	1.00	-3.4	20.0
PCB-1016 Peak 3	Lin1		0.0822		0.972	1.00	-2.8	20.0
PCB-1016 Peak 4	Lin1		0.0345		0.977	1.00	-2.3	20.0
PCB-1016 Peak 5	Lin1		0.0335		0.948	1.00	-5.2	20.0
PCB-1260 Peak 1	Lin1		0.0483		0.916	1.00	-8.4	20.0
PCB-1260 Peak 2	Lin1		0.0912		0.904	1.00	-9.6	20.0
PCB-1260 Peak 3	Lin1		0.0884		0.866	1.00	-13.4	20.0
PCB-1260 Peak 4	Lin1		0.1340		0.974	1.00	-2.6	20.0
PCB-1260 Peak 5	Lin1		0.0667		0.947	1.00	-5.3	20.0
Tetrachloro-m-xylene	Ave	1.000	0.9725		0.0486	0.0500	-2.7	20.0
DCB Decachlorobiphenyl	Ave	1.192	1.151		0.0483	0.0500	-3.4	20.0

FORM VII
PCBS CONTINUING CALIBRATION RETENTION TIME SUMMARY

Lab Name: TestAmerica Canton Job No.: 240-81698-1

SDG No.:

Lab Sample ID: ICV 240-281427/36 Calibration Date: 06/04/2017 21:24

Instrument ID: A2HP11 Calib Start Date: 06/04/2017 18:55

GC Column: CLP-1 (0.53mm) ID: 0.53(mm) Calib End Date: 06/04/2017 20:29

Lab File ID: P11060436.D

Analyte	RT	RT WINDOW	
		FROM	TO
PCB-1016 Peak 1	5.06	5.04	5.08
PCB-1016 Peak 2	5.52	5.51	5.54
PCB-1016 Peak 3	6.11	6.09	6.13
PCB-1016 Peak 4	6.28	6.26	6.30
PCB-1016 Peak 5	6.79	6.77	6.81
PCB-1260 Peak 1	8.25	8.23	8.27
PCB-1260 Peak 2	8.58	8.56	8.60
PCB-1260 Peak 3	8.90	8.88	8.92
PCB-1260 Peak 4	9.67	9.66	9.69
PCB-1260 Peak 5	9.99	9.97	10.01
Tetrachloro-m-xylene	4.54	4.53	4.56
DCB Decachlorobiphenyl	11.20	11.18	11.22

FORM VII
PCBS CONTINUING CALIBRATION DATA

Lab Name: TestAmerica Canton Job No.: 240-81698-1

SDG No.:

Lab Sample ID: ICV 240-281427/36 Calibration Date: 06/04/2017 21:24

Instrument ID: A2HP11 Calib Start Date: 06/04/2017 18:55

GC Column: CLP-2 (0.53mm) ID: 0.53(mm) Calib End Date: 06/04/2017 20:29

Lab File ID: P11060436.D Conc. Units: ng/uL

ANALYTE	CURVE TYPE	AVE RRF	RRF	MIN RRF	CALC AMOUNT	SPIKE AMOUNT	%D	MAX %D
PCB-1016 Peak 1	Lin1		0.0203		1.01	1.00	0.8	20.0
PCB-1016 Peak 2	Lin1		0.0385		1.01	1.00	1.2	20.0
PCB-1016 Peak 3	Lin1		0.0842		0.977	1.00	-2.3	20.0
PCB-1016 Peak 4	Lin1		0.0367		0.983	1.00	-1.7	20.0
PCB-1016 Peak 5	Lin1		0.0274		0.948	1.00	-5.2	20.0
PCB-1260 Peak 1	Lin1		0.0521		0.871	1.00	-12.9	20.0
PCB-1260 Peak 2	Lin1		0.0625		0.897	1.00	-10.3	20.0
PCB-1260 Peak 3	Lin1		0.0862		0.855	1.00	-14.5	20.0
PCB-1260 Peak 4	Lin1		0.1310		0.959	1.00	-4.1	20.0
PCB-1260 Peak 5	Lin1		0.0899		0.938	1.00	-6.2	20.0
Tetrachloro-m-xylene	Lin1		1.041		0.0531	0.0500	6.2	20.0
DCB Decachlorobiphenyl	Ave	1.146	1.120		0.0489	0.0500	-2.3	20.0

FORM VII
PCBS CONTINUING CALIBRATION RETENTION TIME SUMMARY

Lab Name: TestAmerica Canton Job No.: 240-81698-1

SDG No.:

Lab Sample ID: ICV 240-281427/36 Calibration Date: 06/04/2017 21:24

Instrument ID: A2HP11 Calib Start Date: 06/04/2017 18:55

GC Column: CLP-2 (0.53mm) ID: 0.53(mm) Calib End Date: 06/04/2017 20:29

Lab File ID: P11060436.D

Analyte	RT	RT WINDOW	
		FROM	TO
PCB-1016 Peak 1	6.02	6.01	6.04
PCB-1016 Peak 2	6.58	6.56	6.60
PCB-1016 Peak 3	7.17	7.15	7.18
PCB-1016 Peak 4	7.34	7.32	7.36
PCB-1016 Peak 5	7.93	7.91	7.95
PCB-1260 Peak 1	9.45	9.43	9.47
PCB-1260 Peak 2	9.70	9.68	9.72
PCB-1260 Peak 3	10.11	10.09	10.13
PCB-1260 Peak 4	10.85	10.83	10.87
PCB-1260 Peak 5	11.23	11.21	11.25
Tetrachloro-m-xylene	5.29	5.27	5.31
DCB Decachlorobiphenyl	12.33	12.31	12.35

FORM VII
PCBS CONTINUING CALIBRATION DATA

Lab Name: TestAmerica Canton Job No.: 240-81698-1

SDG No.:

Lab Sample ID: ICV 240-281427/37 Calibration Date: 06/04/2017 21:43

Instrument ID: A2HP11 Calib Start Date: 06/04/2017 17:04

GC Column: CLP-1 (0.53mm) ID: 0.53(mm) Calib End Date: 06/04/2017 18:37

Lab File ID: P11060437.D Conc. Units: ng/uL

ANALYTE	CURVE TYPE	AVE RRF	RRF	MIN RRF	CALC AMOUNT	SPIKE AMOUNT	%D	MAX %D
PCB-1254 Peak 1	Lin1		0.0440		1.02	1.00	2.1	20.0
PCB-1254 Peak 2	Lin1		0.0647		1.00	1.00	0.2	20.0
PCB-1254 Peak 3	Lin1		0.0507		1.04	1.00	3.9	20.0
PCB-1254 Peak 4	Lin1		0.0458		1.06	1.00	6.3	20.0
PCB-1254 Peak 5	Lin1		0.0741		1.10	1.00	9.6	20.0

FORM VII
PCBS CONTINUING CALIBRATION RETENTION TIME SUMMARY

Lab Name: TestAmerica Canton Job No.: 240-81698-1

SDG No.:

Lab Sample ID: ICV 240-281427/37 Calibration Date: 06/04/2017 21:43

Instrument ID: A2HP11 Calib Start Date: 06/04/2017 17:04

GC Column: CLP-1 (0.53mm) ID: 0.53(mm) Calib End Date: 06/04/2017 18:37

Lab File ID: P11060437.D

Analyte	RT	RT WINDOW	
		FROM	TO
PCB-1254 Peak 1	7.57	7.55	7.59
PCB-1254 Peak 2	8.03	8.02	8.05
PCB-1254 Peak 3	8.36	8.34	8.38
PCB-1254 Peak 4	8.58	8.56	8.60
PCB-1254 Peak 5	8.90	8.88	8.92

FORM VII
PCBS CONTINUING CALIBRATION DATA

Lab Name: TestAmerica Canton Job No.: 240-81698-1

SDG No.:

Lab Sample ID: ICV 240-281427/37 Calibration Date: 06/04/2017 21:43

Instrument ID: A2HP11 Calib Start Date: 06/04/2017 17:04

GC Column: CLP-2 (0.53mm) ID: 0.53(mm) Calib End Date: 06/04/2017 18:37

Lab File ID: P11060437.D Conc. Units: ng/uL

ANALYTE	CURVE TYPE	AVE RRF	RRF	MIN RRF	CALC AMOUNT	SPIKE AMOUNT	%D	MAX %D
PCB-1254 Peak 1	Lin1		0.0378		1.00	1.00	0.5	20.0
PCB-1254 Peak 2	Lin1		0.0447		1.03	1.00	2.7	20.0
PCB-1254 Peak 3	Lin1		0.0666		0.968	1.00	-3.2	20.0
PCB-1254 Peak 4	Lin1		0.0509		1.03	1.00	3.3	20.0
PCB-1254 Peak 5	Lin1		0.0731		1.08	1.00	7.9	20.0

FORM VII
PCBS CONTINUING CALIBRATION RETENTION TIME SUMMARY

Lab Name: TestAmerica Canton Job No.: 240-81698-1

SDG No.:

Lab Sample ID: ICV 240-281427/37 Calibration Date: 06/04/2017 21:43

Instrument ID: A2HP11 Calib Start Date: 06/04/2017 17:04

GC Column: CLP-2 (0.53mm) ID: 0.53(mm) Calib End Date: 06/04/2017 18:37

Lab File ID: P11060437.D

Analyte	RT	RT WINDOW	
		FROM	TO
PCB-1254 Peak 1	8.44	8.42	8.46
PCB-1254 Peak 2	8.68	8.66	8.70
PCB-1254 Peak 3	9.22	9.20	9.24
PCB-1254 Peak 4	9.49	9.47	9.51
PCB-1254 Peak 5	10.11	10.09	10.13

FORM VII
PCBS CONTINUING CALIBRATION DATA

Lab Name: TestAmerica Canton Job No.: 240-81698-1

SDG No.:

Lab Sample ID: ICV 240-281427/38 Calibration Date: 06/04/2017 22:02

Instrument ID: A2HP11 Calib Start Date: 06/04/2017 15:12

GC Column: CLP-1 (0.53mm) ID: 0.53(mm) Calib End Date: 06/04/2017 16:45

Lab File ID: P11060438.D Conc. Units: ng/uL

ANALYTE	CURVE TYPE	AVE RRF	RRF	MIN RRF	CALC AMOUNT	SPIKE AMOUNT	%D	MAX %D
PCB-1248 Peak 1	Lin1		0.0400		1.01	1.00	1.0	20.0
PCB-1248 Peak 2	Lin1		0.0366		0.905	1.00	-9.5	20.0
PCB-1248 Peak 3	Lin1		0.0341		0.868	1.00	-13.2	20.0
PCB-1248 Peak 4	Lin1		0.0291		0.926	1.00	-7.4	20.0
PCB-1248 Peak 5	Lin1		0.0174		0.852	1.00	-14.8	20.0

FORM VII
PCBS CONTINUING CALIBRATION RETENTION TIME SUMMARY

Lab Name: TestAmerica Canton Job No.: 240-81698-1

SDG No.:

Lab Sample ID: ICV 240-281427/38 Calibration Date: 06/04/2017 22:02

Instrument ID: A2HP11 Calib Start Date: 06/04/2017 15:12

GC Column: CLP-1 (0.53mm) ID: 0.53(mm) Calib End Date: 06/04/2017 16:45

Lab File ID: P11060438.D

Analyte	RT	RT WINDOW	
		FROM	TO
PCB-1248 Peak 1	6.11	6.09	6.13
PCB-1248 Peak 2	6.79	6.77	6.81
PCB-1248 Peak 3	7.31	7.29	7.33
PCB-1248 Peak 4	7.57	7.55	7.59
PCB-1248 Peak 5	8.03	8.02	8.06

FORM VII
PCBS CONTINUING CALIBRATION DATA

Lab Name: TestAmerica Canton Job No.: 240-81698-1

SDG No.:

Lab Sample ID: ICV 240-281427/38 Calibration Date: 06/04/2017 22:02

Instrument ID: A2HP11 Calib Start Date: 06/04/2017 15:12

GC Column: CLP-2 (0.53mm) ID: 0.53(mm) Calib End Date: 06/04/2017 16:45

Lab File ID: P11060438.D Conc. Units: ng/uL

ANALYTE	CURVE TYPE	AVE RRF	RRF	MIN RRF	CALC AMOUNT	SPIKE AMOUNT	%D	MAX %D
PCB-1248 Peak 1	Lin1		0.0423		1.02	1.00	1.5	20.0
PCB-1248 Peak 2	Lin1		0.0209		0.886	1.00	-11.4	20.0
PCB-1248 Peak 3	Lin1		0.0302		0.903	1.00	-9.7	20.0
PCB-1248 Peak 4	Lin1		0.0422		0.998	1.00	-0.2	20.0
PCB-1248 Peak 5	Lin1		0.0211		0.875	1.00	-12.5	20.0

FORM VII
PCBS CONTINUING CALIBRATION RETENTION TIME SUMMARY

Lab Name: TestAmerica Canton Job No.: 240-81698-1

SDG No.:

Lab Sample ID: ICV 240-281427/38 Calibration Date: 06/04/2017 22:02

Instrument ID: A2HP11 Calib Start Date: 06/04/2017 15:12

GC Column: CLP-2 (0.53mm) ID: 0.53(mm) Calib End Date: 06/04/2017 16:45

Lab File ID: P11060438.D

Analyte	RT	RT WINDOW	
		FROM	TO
PCB-1248 Peak 1	7.17	7.15	7.19
PCB-1248 Peak 2	7.60	7.59	7.62
PCB-1248 Peak 3	7.93	7.91	7.95
PCB-1248 Peak 4	8.44	8.43	8.46
PCB-1248 Peak 5	9.22	9.20	9.24

FORM VII
PCBS CONTINUING CALIBRATION DATA

Lab Name: TestAmerica Canton Job No.: 240-81698-1

SDG No.:

Lab Sample ID: ICV 240-281427/39 Calibration Date: 06/04/2017 22:20

Instrument ID: A2HP11 Calib Start Date: 06/04/2017 13:20

GC Column: CLP-1 (0.53mm) ID: 0.53(mm) Calib End Date: 06/04/2017 14:53

Lab File ID: P11060439.D Conc. Units: ng/uL

ANALYTE	CURVE TYPE	AVE RRF	RRF	MIN RRF	CALC AMOUNT	SPIKE AMOUNT	%D	MAX %D
PCB-1242 Peak 1	Lin1		0.0136		0.835	1.00	-16.5	20.0
PCB-1242 Peak 2	Lin1		0.0259		0.871	1.00	-12.9	20.0
PCB-1242 Peak 3	Lin1		0.0636		0.872	1.00	-12.8	20.0
PCB-1242 Peak 4	Lin1		0.0272		0.894	1.00	-10.6	20.0
PCB-1242 Peak 5	Lin1		0.0273		0.881	1.00	-11.9	20.0

FORM VII
PCBS CONTINUING CALIBRATION RETENTION TIME SUMMARY

Lab Name: TestAmerica Canton Job No.: 240-81698-1

SDG No.:

Lab Sample ID: ICV 240-281427/39 Calibration Date: 06/04/2017 22:20

Instrument ID: A2HP11 Calib Start Date: 06/04/2017 13:20

GC Column: CLP-1 (0.53mm) ID: 0.53(mm) Calib End Date: 06/04/2017 14:53

Lab File ID: P11060439.D

Analyte	RT	RT WINDOW	
		FROM	TO
PCB-1242 Peak 1	5.06	5.04	5.08
PCB-1242 Peak 2	5.52	5.50	5.54
PCB-1242 Peak 3	6.11	6.09	6.13
PCB-1242 Peak 4	6.28	6.26	6.30
PCB-1242 Peak 5	6.79	6.77	6.81

FORM VII
PCBS CONTINUING CALIBRATION DATA

Lab Name: TestAmerica Canton Job No.: 240-81698-1

SDG No.:

Lab Sample ID: ICV 240-281427/39 Calibration Date: 06/04/2017 22:20

Instrument ID: A2HP11 Calib Start Date: 06/04/2017 13:20

GC Column: CLP-2 (0.53mm) ID: 0.53(mm) Calib End Date: 06/04/2017 14:53

Lab File ID: P11060439.D Conc. Units: ng/uL

ANALYTE	CURVE TYPE	AVE RRF	RRF	MIN RRF	CALC AMOUNT	SPIKE AMOUNT	%D	MAX %D
PCB-1242 Peak 1	Lin1		0.0162		0.938	1.00	-6.2	20.0
PCB-1242 Peak 2	Lin1		0.0297		0.906	1.00	-9.4	20.0
PCB-1242 Peak 3	Lin1		0.0654		0.875	1.00	-12.5	20.0
PCB-1242 Peak 4	Lin1		0.0284		0.879	1.00	-12.1	20.0
PCB-1242 Peak 5	Lin1		0.0226		0.897	1.00	-10.3	20.0

FORM VII
PCBS CONTINUING CALIBRATION RETENTION TIME SUMMARY

Lab Name: TestAmerica Canton Job No.: 240-81698-1

SDG No.:

Lab Sample ID: ICV 240-281427/39 Calibration Date: 06/04/2017 22:20

Instrument ID: A2HP11 Calib Start Date: 06/04/2017 13:20

GC Column: CLP-2 (0.53mm) ID: 0.53(mm) Calib End Date: 06/04/2017 14:53

Lab File ID: P11060439.D

Analyte	RT	RT WINDOW	
		FROM	TO
PCB-1242 Peak 1	6.02	6.00	6.04
PCB-1242 Peak 2	6.58	6.56	6.60
PCB-1242 Peak 3	7.17	7.15	7.19
PCB-1242 Peak 4	7.34	7.32	7.36
PCB-1242 Peak 5	7.93	7.91	7.95

FORM VII
PCBS CONTINUING CALIBRATION DATA

Lab Name: TestAmerica Canton Job No.: 240-81698-1

SDG No.:

Lab Sample ID: ICV 240-281427/40 Calibration Date: 06/04/2017 22:39

Instrument ID: A2HP11 Calib Start Date: 06/04/2017 11:28

GC Column: CLP-1 (0.53mm) ID: 0.53(mm) Calib End Date: 06/04/2017 13:02

Lab File ID: P11060440.D Conc. Units: ng/uL

ANALYTE	CURVE TYPE	AVE RRF	RRF	MIN RRF	CALC AMOUNT	SPIKE AMOUNT	%D	MAX %D
PCB-1232 Peak 1	Lin1		0.0192		1.04	1.00	4.3	20.0
PCB-1232 Peak 2	Lin1		0.0151		1.12	1.00	11.9	20.0
PCB-1232 Peak 3	Lin1		0.0369		1.16	1.00	16.3	20.0
PCB-1232 Peak 4	Lin1		0.0157		1.16	1.00	16.1	20.0
PCB-1232 Peak 5	Lin1		0.0147		1.18	1.00	17.6	20.0

FORM VII
PCBS CONTINUING CALIBRATION RETENTION TIME SUMMARY

Lab Name: TestAmerica Canton Job No.: 240-81698-1

SDG No.:

Lab Sample ID: ICV 240-281427/40 Calibration Date: 06/04/2017 22:39

Instrument ID: A2HP11 Calib Start Date: 06/04/2017 11:28

GC Column: CLP-1 (0.53mm) ID: 0.53(mm) Calib End Date: 06/04/2017 13:02

Lab File ID: P11060440.D

Analyte	RT	RT WINDOW	
		FROM	TO
PCB-1232 Peak 1	5.06	5.04	5.08
PCB-1232 Peak 2	5.53	5.51	5.54
PCB-1232 Peak 3	6.11	6.09	6.13
PCB-1232 Peak 4	6.28	6.26	6.30
PCB-1232 Peak 5	6.79	6.77	6.81

FORM VII
PCBS CONTINUING CALIBRATION DATA

Lab Name: TestAmerica Canton Job No.: 240-81698-1

SDG No.:

Lab Sample ID: ICV 240-281427/40 Calibration Date: 06/04/2017 22:39

Instrument ID: A2HP11 Calib Start Date: 06/04/2017 11:28

GC Column: CLP-2 (0.53mm) ID: 0.53(mm) Calib End Date: 06/04/2017 13:02

Lab File ID: P11060440.D Conc. Units: ng/uL

ANALYTE	CURVE TYPE	AVE RRF	RRF	MIN RRF	CALC AMOUNT	SPIKE AMOUNT	%D	MAX %D
PCB-1232 Peak 1	Lin1		0.0224		1.15	1.00	15.5	20.0
PCB-1232 Peak 2	Lin1		0.0188		1.20	1.00	20.1*	20.0
PCB-1232 Peak 3	Lin1		0.0394		1.19	1.00	19.0	20.0
PCB-1232 Peak 4	Lin1		0.0172		1.21	1.00	20.6*	20.0
PCB-1232 Peak 5	Lin1		0.0125		1.21	1.00	21.2*	20.0

FORM VII
PCBS CONTINUING CALIBRATION RETENTION TIME SUMMARY

Lab Name: TestAmerica Canton Job No.: 240-81698-1

SDG No.:

Lab Sample ID: ICV 240-281427/40 Calibration Date: 06/04/2017 22:39

Instrument ID: A2HP11 Calib Start Date: 06/04/2017 11:28

GC Column: CLP-2 (0.53mm) ID: 0.53(mm) Calib End Date: 06/04/2017 13:02

Lab File ID: P11060440.D

Analyte	RT	RT WINDOW	
		FROM	TO
PCB-1232 Peak 1	6.02	6.01	6.04
PCB-1232 Peak 2	6.58	6.56	6.60
PCB-1232 Peak 3	7.17	7.15	7.19
PCB-1232 Peak 4	7.34	7.32	7.36
PCB-1232 Peak 5	7.93	7.91	7.95

FORM VII
PCBS CONTINUING CALIBRATION DATA

Lab Name: TestAmerica Canton Job No.: 240-81698-1

SDG No.:

Lab Sample ID: ICV 240-281427/41 Calibration Date: 06/04/2017 22:58

Instrument ID: A2HP11 Calib Start Date: 06/04/2017 17:04

GC Column: CLP-1 (0.53mm) ID: 0.53(mm) Calib End Date: 06/04/2017 18:37

Lab File ID: P11060441.D Conc. Units: ng/uL

ANALYTE	CURVE TYPE	AVE RRF	RRF	MIN RRF	CALC AMOUNT	SPIKE AMOUNT	%D	MAX %D
PCB-1221 Peak 1	Lin1		0.0099		1.07	1.00	7.4	20.0
PCB-1221 Peak 2	Lin1		0.0058		0.966	1.00	-3.4	20.0
PCB-1221 Peak 3	Lin1		0.0232		1.03	1.00	3.1	20.0

FORM VII 8082A

FORM VII
PCBS CONTINUING CALIBRATION RETENTION TIME SUMMARY

Lab Name: TestAmerica Canton Job No.: 240-81698-1

SDG No.:

Lab Sample ID: ICV 240-281427/41 Calibration Date: 06/04/2017 22:58

Instrument ID: A2HP11 Calib Start Date: 06/04/2017 17:04

GC Column: CLP-1 (0.53mm) ID: 0.53(mm) Calib End Date: 06/04/2017 18:37

Lab File ID: P11060441.D

Analyte	RT	RT WINDOW	
		FROM	TO
PCB-1221 Peak 1	4.81	4.80	4.84
PCB-1221 Peak 2	5.01	4.99	5.03
PCB-1221 Peak 3	5.06	5.04	5.08

FORM VII
PCBS CONTINUING CALIBRATION DATA

Lab Name: TestAmerica Canton Job No.: 240-81698-1

SDG No.:

Lab Sample ID: ICV 240-281427/41 Calibration Date: 06/04/2017 22:58

Instrument ID: A2HP11 Calib Start Date: 06/04/2017 17:04

GC Column: CLP-2 (0.53mm) ID: 0.53(mm) Calib End Date: 06/04/2017 18:37

Lab File ID: P11060441.D Conc. Units: ng/uL

ANALYTE	CURVE TYPE	AVE RRF	RRF	MIN RRF	CALC AMOUNT	SPIKE AMOUNT	%D	MAX %D
PCB-1221 Peak 1	Lin1		0.0094		0.990	1.00	-1.0	20.0
PCB-1221 Peak 2	Lin1		0.0068		1.08	1.00	7.7	20.0
PCB-1221 Peak 3	Lin1		0.0268		1.11	1.00	11.3	20.0

FORM VII
PCBS CONTINUING CALIBRATION RETENTION TIME SUMMARY

Lab Name: TestAmerica Canton Job No.: 240-81698-1

SDG No.:

Lab Sample ID: ICV 240-281427/41 Calibration Date: 06/04/2017 22:58

Instrument ID: A2HP11 Calib Start Date: 06/04/2017 17:04

GC Column: CLP-2 (0.53mm) ID: 0.53(mm) Calib End Date: 06/04/2017 18:37

Lab File ID: P11060441.D

Analyte	RT	RT WINDOW	
		FROM	TO
PCB-1221 Peak 1	5.75	5.73	5.77
PCB-1221 Peak 2	5.94	5.92	5.96
PCB-1221 Peak 3	6.02	6.00	6.04

FORM VII
PCBS CONTINUING CALIBRATION DATA

Lab Name: TestAmerica Canton Job No.: 240-81698-1

SDG No.:

Lab Sample ID: CCV 240-285854/3 Calibration Date: 07/05/2017 09:43

Instrument ID: A2HP11 Calib Start Date: 06/04/2017 18:55

GC Column: CLP-1 (0.53mm) ID: 0.53(mm) Calib End Date: 06/04/2017 20:29

Lab File ID: P11070503.D Conc. Units: ng/uL

ANALYTE	CURVE TYPE	AVE RRF	RRF	MIN RRF	CALC AMOUNT	SPIKE AMOUNT	%D	MAX %D
PCB-1016 Peak 1	Lin1		0.0197		0.503	0.500	0.6	20.0
PCB-1016 Peak 2	Lin1		0.0330		0.472	0.500	-5.5	20.0
PCB-1016 Peak 3	Lin1		0.0844		0.495	0.500	-1.0	20.0
PCB-1016 Peak 4	Lin1		0.0358		0.499	0.500	-0.1	20.0
PCB-1016 Peak 5	Lin1		0.0358		0.500	0.500	0.0	20.0
PCB-1260 Peak 1	Lin1		0.0534		0.500	0.500	-0.0	20.0
PCB-1260 Peak 2	Lin1		0.1031		0.506	0.500	1.2	20.0
PCB-1260 Peak 3	Lin1		0.1017		0.496	0.500	-0.9	20.0
PCB-1260 Peak 4	Lin1		0.1446		0.522	0.500	4.4	20.0
PCB-1260 Peak 5	Lin1		0.0709		0.501	0.500	0.2	20.0
Tetrachloro-m-xylene	Ave	1.000	0.9349		0.0234	0.0250	-6.5	20.0
DCB Decachlorobiphenyl	Ave	1.192	1.105		0.0232	0.0250	-7.2	20.0

FORM VII
PCBS CONTINUING CALIBRATION RETENTION TIME SUMMARY

Lab Name: TestAmerica Canton Job No.: 240-81698-1

SDG No.:

Lab Sample ID: CCV 240-285854/3 Calibration Date: 07/05/2017 09:43

Instrument ID: A2HP11 Calib Start Date: 06/04/2017 18:55

GC Column: CLP-1 (0.53mm) ID: 0.53(mm) Calib End Date: 06/04/2017 20:29

Lab File ID: P11070503.D

Analyte	RT	RT WINDOW	
		FROM	TO
PCB-1016 Peak 1	5.05	5.03	5.07
PCB-1016 Peak 2	5.51	5.50	5.53
PCB-1016 Peak 3	6.10	6.08	6.12
PCB-1016 Peak 4	6.27	6.25	6.29
PCB-1016 Peak 5	6.78	6.76	6.80
PCB-1260 Peak 1	8.24	8.22	8.26
PCB-1260 Peak 2	8.57	8.55	8.59
PCB-1260 Peak 3	8.89	8.87	8.90
PCB-1260 Peak 4	9.66	9.64	9.68
PCB-1260 Peak 5	9.98	9.96	10.00
Tetrachloro-m-xylene	4.53	4.52	4.55
DCB Decachlorobiphenyl	11.19	11.17	11.21

FORM VII
PCBS CONTINUING CALIBRATION DATA

Lab Name: TestAmerica Canton Job No.: 240-81698-1

SDG No.:

Lab Sample ID: CCV 240-285854/3 Calibration Date: 07/05/2017 09:43

Instrument ID: A2HP11 Calib Start Date: 06/04/2017 18:55

GC Column: CLP-2 (0.53mm) ID: 0.53(mm) Calib End Date: 06/04/2017 20:29

Lab File ID: P11070503.D Conc. Units: ng/uL

ANALYTE	CURVE TYPE	AVE RRF	RRF	MIN RRF	CALC AMOUNT	SPIKE AMOUNT	%D	MAX %D
PCB-1016 Peak 1	Lin1		0.0205		0.498	0.500	-0.4	20.0
PCB-1016 Peak 2	Lin1		0.0372		0.478	0.500	-4.3	20.0
PCB-1016 Peak 3	Lin1		0.0869		0.498	0.500	-0.4	20.0
PCB-1016 Peak 4	Lin1		0.0358		0.472	0.500	-5.6	20.0
PCB-1016 Peak 5	Lin1		0.0292		0.495	0.500	-1.0	20.0
PCB-1260 Peak 1	Lin1		0.0593		0.489	0.500	-2.2	20.0
PCB-1260 Peak 2	Lin1		0.0708		0.503	0.500	0.5	20.0
PCB-1260 Peak 3	Lin1		0.1034		0.508	0.500	1.6	20.0
PCB-1260 Peak 4	Lin1		0.1444		0.523	0.500	4.5	20.0
PCB-1260 Peak 5	Lin1		0.1007		0.520	0.500	4.0	20.0
Tetrachloro-m-xylene	Lin1		0.9608		0.0241	0.0250	-3.6	20.0
DCB Decachlorobiphenyl	Ave	1.146	1.062		0.0232	0.0250	-7.3	20.0

FORM VII
PCBS CONTINUING CALIBRATION RETENTION TIME SUMMARY

Lab Name: TestAmerica Canton Job No.: 240-81698-1

SDG No.:

Lab Sample ID: CCV 240-285854/3 Calibration Date: 07/05/2017 09:43

Instrument ID: A2HP11 Calib Start Date: 06/04/2017 18:55

GC Column: CLP-2 (0.53mm) ID: 0.53(mm) Calib End Date: 06/04/2017 20:29

Lab File ID: P11070503.D

Analyte	RT	RT WINDOW	
		FROM	TO
PCB-1016 Peak 1	6.01	5.99	6.03
PCB-1016 Peak 2	6.56	6.54	6.58
PCB-1016 Peak 3	7.15	7.13	7.17
PCB-1016 Peak 4	7.32	7.30	7.34
PCB-1016 Peak 5	7.90	7.89	7.92
PCB-1260 Peak 1	9.42	9.40	9.44
PCB-1260 Peak 2	9.67	9.65	9.69
PCB-1260 Peak 3	10.08	10.06	10.10
PCB-1260 Peak 4	10.82	10.80	10.84
PCB-1260 Peak 5	11.20	11.18	11.22
Tetrachloro-m-xylene	5.27	5.25	5.29
DCB Decachlorobiphenyl	12.30	12.28	12.32

FORM VII
PCBS CONTINUING CALIBRATION DATA

Lab Name: TestAmerica Canton Job No.: 240-81698-1

SDG No.:

Lab Sample ID: CCV 240-285854/4 Calibration Date: 07/05/2017 10:01

Instrument ID: A2HP11 Calib Start Date: 06/04/2017 11:28

GC Column: CLP-2 (0.53mm) ID: 0.53(mm) Calib End Date: 06/04/2017 13:02

Lab File ID: P11070504.D Conc. Units: ng/uL

ANALYTE	CURVE TYPE	AVE RRF	RRF	MIN RRF	CALC AMOUNT	SPIKE AMOUNT	%D	MAX %D
PCB-1232 Peak 1	Lin1		0.0195		0.494	0.500	-1.2	20.0
PCB-1232 Peak 2	Lin1		0.0153		0.479	0.500	-4.3	20.0
PCB-1232 Peak 3	Lin1		0.0325		0.488	0.500	-2.5	20.0
PCB-1232 Peak 4	Lin1		0.0141		0.491	0.500	-1.9	20.0
PCB-1232 Peak 5	Lin1		0.0106		0.490	0.500	-2.0	20.0
PCB-1262 Peak 1	Lin1		0.0422		0.477	0.500	-4.6	20.0
PCB-1262 Peak 2	Lin1		0.0683		0.503	0.500	0.7	20.0
PCB-1262 Peak 3	Lin1		0.0590		0.491	0.500	-1.7	20.0
PCB-1262 Peak 4	Lin1		0.1321		0.507	0.500	1.4	20.0
PCB-1262 Peak 5	Lin1		0.0951		0.507	0.500	1.4	20.0

FORM VII
PCBS CONTINUING CALIBRATION RETENTION TIME SUMMARY

Lab Name: TestAmerica Canton Job No.: 240-81698-1

SDG No.:

Lab Sample ID: CCV 240-285854/4 Calibration Date: 07/05/2017 10:01

Instrument ID: A2HP11 Calib Start Date: 06/04/2017 11:28

GC Column: CLP-2 (0.53mm) ID: 0.53(mm) Calib End Date: 06/04/2017 13:02

Lab File ID: P11070504.D

Analyte	RT	RT WINDOW	
		FROM	TO
PCB-1232 Peak 1	6.01	5.99	6.03
PCB-1232 Peak 2	6.56	6.54	6.58
PCB-1232 Peak 3	7.15	7.13	7.17
PCB-1232 Peak 4	7.32	7.30	7.34
PCB-1232 Peak 5	7.90	7.89	7.92
PCB-1262 Peak 1	9.67	9.65	9.69
PCB-1262 Peak 2	10.19	10.17	10.21
PCB-1262 Peak 3	10.54	10.52	10.55
PCB-1262 Peak 4	10.82	10.80	10.84
PCB-1262 Peak 5	11.20	11.18	11.22

FORM VII
PCBS CONTINUING CALIBRATION DATA

Lab Name: TestAmerica Canton Job No.: 240-81698-1

SDG No.:

Lab Sample ID: CCV 240-285854/6 Calibration Date: 07/05/2017 10:38

Instrument ID: A2HP11 Calib Start Date: 06/04/2017 15:12

GC Column: CLP-1 (0.53mm) ID: 0.53(mm) Calib End Date: 06/04/2017 16:45

Lab File ID: P11070506.D Conc. Units: ng/uL

ANALYTE	CURVE TYPE	AVE RRF	RRF	MIN RRF	CALC AMOUNT	SPIKE AMOUNT	%D	MAX %D
PCB-1248 Peak 1	Lin1		0.0429		0.536	0.500	7.2	20.0
PCB-1248 Peak 2	Lin1		0.0452		0.554	0.500	10.7	20.0
PCB-1248 Peak 3	Lin1		0.0386		0.490	0.500	-2.0	20.0
PCB-1248 Peak 4	Lin1		0.0345		0.545	0.500	9.0	20.0
PCB-1248 Peak 5	Lin1		0.0233		0.566	0.500	13.2	20.0

FORM VII
PCBS CONTINUING CALIBRATION RETENTION TIME SUMMARY

Lab Name: TestAmerica Canton Job No.: 240-81698-1

SDG No.:

Lab Sample ID: CCV 240-285854/6 Calibration Date: 07/05/2017 10:38

Instrument ID: A2HP11 Calib Start Date: 06/04/2017 15:12

GC Column: CLP-1 (0.53mm) ID: 0.53(mm) Calib End Date: 06/04/2017 16:45

Lab File ID: P11070506.D

Analyte	RT	RT WINDOW	
		FROM	TO
PCB-1248 Peak 1	6.10	6.08	6.12
PCB-1248 Peak 2	6.78	6.76	6.80
PCB-1248 Peak 3	7.30	7.28	7.32
PCB-1248 Peak 4	7.56	7.54	7.58
PCB-1248 Peak 5	8.02	8.01	8.04

FORM VII
PCBS CONTINUING CALIBRATION DATA

Lab Name: TestAmerica Canton Job No.: 240-81698-1

SDG No.:

Lab Sample ID: CCV 240-285854/6 Calibration Date: 07/05/2017 10:38

Instrument ID: A2HP11 Calib Start Date: 06/04/2017 15:12

GC Column: CLP-2 (0.53mm) ID: 0.53(mm) Calib End Date: 06/04/2017 16:45

Lab File ID: P11070506.D Conc. Units: ng/uL

ANALYTE	CURVE TYPE	AVE RRF	RRF	MIN RRF	CALC AMOUNT	SPIKE AMOUNT	%D	MAX %D
PCB-1248 Peak 1	Lin1		0.0456		0.540	0.500	8.1	20.0
PCB-1248 Peak 2	Lin1		0.0257		0.537	0.500	7.5	20.0
PCB-1248 Peak 3	Lin1		0.0371		0.545	0.500	9.1	20.0
PCB-1248 Peak 4	Lin1		0.0461		0.539	0.500	7.8	20.0
PCB-1248 Peak 5	Lin1		0.0253		0.519	0.500	3.9	20.0

FORM VII
PCBS CONTINUING CALIBRATION RETENTION TIME SUMMARY

Lab Name: TestAmerica Canton Job No.: 240-81698-1

SDG No.:

Lab Sample ID: CCV 240-285854/6 Calibration Date: 07/05/2017 10:38

Instrument ID: A2HP11 Calib Start Date: 06/04/2017 15:12

GC Column: CLP-2 (0.53mm) ID: 0.53(mm) Calib End Date: 06/04/2017 16:45

Lab File ID: P11070506.D

Analyte	RT	RT WINDOW	
		FROM	TO
PCB-1248 Peak 1	7.15	7.13	7.16
PCB-1248 Peak 2	7.58	7.56	7.60
PCB-1248 Peak 3	7.91	7.89	7.93
PCB-1248 Peak 4	8.42	8.40	8.44
PCB-1248 Peak 5	9.19	9.17	9.21

FORM VII
PCBS CONTINUING CALIBRATION DATA

Lab Name: TestAmerica Canton Job No.: 240-81698-1

SDG No.:

Lab Sample ID: CCV 240-285854/7 Calibration Date: 07/05/2017 10:57

Instrument ID: A2HP11 Calib Start Date: 06/04/2017 17:04

GC Column: CLP-2 (0.53mm) ID: 0.53(mm) Calib End Date: 06/04/2017 18:37

Lab File ID: P11070507.D Conc. Units: ng/uL

ANALYTE	CURVE TYPE	AVE RRF	RRF	MIN RRF	CALC AMOUNT	SPIKE AMOUNT	%D	MAX %D
PCB-1221 Peak 1	Lin1		0.0092		0.472	0.500	-5.5	20.0
PCB-1221 Peak 2	Lin1		0.0062		0.483	0.500	-3.3	20.0
PCB-1221 Peak 3	Lin1		0.0238		0.485	0.500	-3.1	20.0
PCB-1254 Peak 1	Lin1		0.0366		0.478	0.500	-4.4	20.0
PCB-1254 Peak 2	Lin1		0.0420		0.475	0.500	-5.0	20.0
PCB-1254 Peak 3	Lin1		0.0686		0.492	0.500	-1.7	20.0
PCB-1254 Peak 4	Lin1		0.0476		0.478	0.500	-4.4	20.0
PCB-1254 Peak 5	Lin1		0.0670		0.489	0.500	-2.3	20.0

FORM VII
PCBS CONTINUING CALIBRATION RETENTION TIME SUMMARY

Lab Name: TestAmerica Canton Job No.: 240-81698-1

SDG No.:

Lab Sample ID: CCV 240-285854/7 Calibration Date: 07/05/2017 10:57

Instrument ID: A2HP11 Calib Start Date: 06/04/2017 17:04

GC Column: CLP-2 (0.53mm) ID: 0.53(mm) Calib End Date: 06/04/2017 18:37

Lab File ID: P11070507.D

Analyte	RT	RT WINDOW	
		FROM	TO
PCB-1221 Peak 1	5.73	5.71	5.75
PCB-1221 Peak 2	5.93	5.91	5.95
PCB-1221 Peak 3	6.01	5.99	6.03
PCB-1254 Peak 1	8.42	8.40	8.44
PCB-1254 Peak 2	8.65	8.63	8.67
PCB-1254 Peak 3	9.19	9.17	9.21
PCB-1254 Peak 4	9.46	9.44	9.48
PCB-1254 Peak 5	10.09	10.07	10.11

FORM VII
PCBS CONTINUING CALIBRATION DATA

Lab Name: TestAmerica Canton Job No.: 240-81698-1

SDG No.:

Lab Sample ID: CCV 240-285854/9 Calibration Date: 07/05/2017 11:34

Instrument ID: A2HP11 Calib Start Date: 06/04/2017 13:20

GC Column: CLP-2 (0.53mm) ID: 0.53(mm) Calib End Date: 06/04/2017 14:53

Lab File ID: P11070509.D Conc. Units: ng/uL

ANALYTE	CURVE TYPE	AVE RRF	RRF	MIN RRF	CALC AMOUNT	SPIKE AMOUNT	%D	MAX %D
PCB-1242 Peak 1	Lin1		0.0183		0.524	0.500	4.7	20.0
PCB-1242 Peak 2	Lin1		0.0325		0.487	0.500	-2.7	20.0
PCB-1242 Peak 3	Lin1		0.0758		0.503	0.500	0.6	20.0
PCB-1242 Peak 4	Lin1		0.0319		0.490	0.500	-2.1	20.0
PCB-1242 Peak 5	Lin1		0.0258		0.502	0.500	0.5	20.0
PCB-1268 Peak 1	Lin1		0.2131		0.539	0.500	7.8	20.0
PCB-1268 Peak 2	Lin1		0.2125		0.536	0.500	7.2	20.0
PCB-1268 Peak 3	Lin1		0.1827		0.532	0.500	6.3	20.0
PCB-1268 Peak 4	Lin1		0.0763		0.537	0.500	7.4	20.0
PCB-1268 Peak 5	Lin1		0.5616		0.523	0.500	4.6	20.0

FORM VII
PCBS CONTINUING CALIBRATION RETENTION TIME SUMMARY

Lab Name: TestAmerica Canton Job No.: 240-81698-1

SDG No.:

Lab Sample ID: CCV 240-285854/9 Calibration Date: 07/05/2017 11:34

Instrument ID: A2HP11 Calib Start Date: 06/04/2017 13:20

GC Column: CLP-2 (0.53mm) ID: 0.53(mm) Calib End Date: 06/04/2017 14:53

Lab File ID: P11070509.D

Analyte	RT	RT WINDOW	
		FROM	TO
PCB-1242 Peak 1	6.01	5.99	6.03
PCB-1242 Peak 2	6.56	6.54	6.58
PCB-1242 Peak 3	7.15	7.13	7.17
PCB-1242 Peak 4	7.32	7.30	7.34
PCB-1242 Peak 5	7.91	7.89	7.92
PCB-1268 Peak 1	11.20	11.18	11.22
PCB-1268 Peak 2	11.24	11.23	11.26
PCB-1268 Peak 3	11.49	11.48	11.51
PCB-1268 Peak 4	11.77	11.75	11.79
PCB-1268 Peak 5	12.07	12.05	12.09

FORM VII
PCBS CONTINUING CALIBRATION DATA

Lab Name: TestAmerica Canton Job No.: 240-81698-1

SDG No.:

Lab Sample ID: ICV 240-285960/34 Calibration Date: 07/06/2017 00:43

Instrument ID: A2HP4 Calib Start Date: 07/05/2017 20:47

GC Column: CLP-1 (0.53mm) ID: 0.53(mm) Calib End Date: 07/05/2017 22:26

Lab File ID: P40705034.D Conc. Units: ng/uL

ANALYTE	CURVE TYPE	AVE RRF	RRF	MIN RRF	CALC AMOUNT	SPIKE AMOUNT	%D	MAX %D
PCB-1221 Peak 1	Lin1		0.0111		1.05	1.00	5.0	20.0
PCB-1221 Peak 2	Lin1		0.0067		0.970	1.00	-3.0	20.0
PCB-1221 Peak 3	Lin1		0.0257		0.991	1.00	-0.9	20.0

FORM VII
PCBS CONTINUING CALIBRATION RETENTION TIME SUMMARY

Lab Name: TestAmerica Canton Job No.: 240-81698-1

SDG No.:

Lab Sample ID: ICV 240-285960/34 Calibration Date: 07/06/2017 00:43

Instrument ID: A2HP4 Calib Start Date: 07/05/2017 20:47

GC Column: CLP-1 (0.53mm) ID: 0.53(mm) Calib End Date: 07/05/2017 22:26

Lab File ID: P40705034.D

Analyte	RT	RT WINDOW	
		FROM	TO
PCB-1221 Peak 1	2.98	2.96	3.00
PCB-1221 Peak 2	3.22	3.21	3.25
PCB-1221 Peak 3	3.29	3.28	3.32

FORM VII
PCBS CONTINUING CALIBRATION DATA

Lab Name: TestAmerica Canton Job No.: 240-81698-1

SDG No.:

Lab Sample ID: ICV 240-285960/34 Calibration Date: 07/06/2017 00:43

Instrument ID: A2HP4 Calib Start Date: 07/05/2017 20:47

GC Column: CLP-2 (0.53mm) ID: 0.53(mm) Calib End Date: 07/05/2017 22:26

Lab File ID: P40705034.D Conc. Units: ng/uL

ANALYTE	CURVE TYPE	AVE RRF	RRF	MIN RRF	CALC AMOUNT	SPIKE AMOUNT	%D	MAX %D
PCB-1221 Peak 1	Lin1		0.0096		0.923	1.00	-7.7	20.0
PCB-1221 Peak 2	Lin1		0.0069		1.03	1.00	3.0	20.0
PCB-1221 Peak 3	Lin1		0.0256		1.03	1.00	3.0	20.0

FORM VII
PCBS CONTINUING CALIBRATION RETENTION TIME SUMMARY

Lab Name: TestAmerica Canton Job No.: 240-81698-1

SDG No.:

Lab Sample ID: ICV 240-285960/34 Calibration Date: 07/06/2017 00:43

Instrument ID: A2HP4 Calib Start Date: 07/05/2017 20:47

GC Column: CLP-2 (0.53mm) ID: 0.53(mm) Calib End Date: 07/05/2017 22:26

Lab File ID: P40705034.D

Analyte	RT	RT WINDOW	
		FROM	TO
PCB-1221 Peak 1	3.88	3.86	3.90
PCB-1221 Peak 2	4.12	4.11	4.15
PCB-1221 Peak 3	4.22	4.21	4.25

FORM VII
PCBS CONTINUING CALIBRATION DATA

Lab Name: TestAmerica Canton Job No.: 240-81698-1

SDG No.:

Lab Sample ID: ICV 240-285960/35 Calibration Date: 07/06/2017 01:03

Instrument ID: A2HP4 Calib Start Date: 07/05/2017 14:55

GC Column: CLP-1 (0.53mm) ID: 0.53(mm) Calib End Date: 07/05/2017 16:33

Lab File ID: P40705035.D Conc. Units: ng/uL

ANALYTE	CURVE TYPE	AVE RRF	RRF	MIN RRF	CALC AMOUNT	SPIKE AMOUNT	%D	MAX %D
PCB-1232 Peak 1	Lin1		0.0220		0.944	1.00	-5.6	20.0
PCB-1232 Peak 2	Lin1		0.0190		1.10	1.00	9.7	20.0
PCB-1232 Peak 3	Lin1		0.0420		1.21	1.00	21.1*	20.0
PCB-1232 Peak 4	Lin1		0.0178		1.15	1.00	14.7	20.0
PCB-1232 Peak 5	Lin1		0.0064		1.12	1.00	12.4	20.0

FORM VII
PCBS CONTINUING CALIBRATION RETENTION TIME SUMMARY

Lab Name: TestAmerica Canton Job No.: 240-81698-1

SDG No.:

Lab Sample ID: ICV 240-285960/35 Calibration Date: 07/06/2017 01:03

Instrument ID: A2HP4 Calib Start Date: 07/05/2017 14:55

GC Column: CLP-1 (0.53mm) ID: 0.53(mm) Calib End Date: 07/05/2017 16:33

Lab File ID: P40705035.D

Analyte	RT	RT WINDOW	
		FROM	TO
PCB-1232 Peak 1	3.29	3.27	3.30
PCB-1232 Peak 2	3.90	3.87	3.90
PCB-1232 Peak 3	4.65	4.62	4.65
PCB-1232 Peak 4	4.85	4.82	4.86
PCB-1232 Peak 5	5.23	5.20	5.24

FORM VII
PCBS CONTINUING CALIBRATION DATA

Lab Name: TestAmerica Canton Job No.: 240-81698-1

SDG No.:

Lab Sample ID: ICV 240-285960/35 Calibration Date: 07/06/2017 01:03

Instrument ID: A2HP4 Calib Start Date: 07/05/2017 14:55

GC Column: CLP-2 (0.53mm) ID: 0.53(mm) Calib End Date: 07/05/2017 16:33

Lab File ID: P40705035.D Conc. Units: ng/uL

ANALYTE	CURVE TYPE	AVE RRF	RRF	MIN RRF	CALC AMOUNT	SPIKE AMOUNT	%D	MAX %D
PCB-1232 Peak 1	Lin1		0.0224		1.01	1.00	1.2	20.0
PCB-1232 Peak 2	Lin1		0.0197		1.11	1.00	10.7	20.0
PCB-1232 Peak 3	Lin1		0.0398		1.22	1.00	22.0*	20.0
PCB-1232 Peak 4	Lin1		0.0154		1.08	1.00	7.9	20.0
PCB-1232 Peak 5	Lin1		0.0123		1.26	1.00	25.7*	20.0

FORM VII
PCBS CONTINUING CALIBRATION RETENTION TIME SUMMARY

Lab Name: TestAmerica Canton Job No.: 240-81698-1

SDG No.:

Lab Sample ID: ICV 240-285960/35 Calibration Date: 07/06/2017 01:03

Instrument ID: A2HP4 Calib Start Date: 07/05/2017 14:55

GC Column: CLP-2 (0.53mm) ID: 0.53(mm) Calib End Date: 07/05/2017 16:33

Lab File ID: P40705035.D

Analyte	RT	RT WINDOW	
		FROM	TO
PCB-1232 Peak 1	4.22	4.19	4.23
PCB-1232 Peak 2	4.90	4.87	4.91
PCB-1232 Peak 3	5.61	5.58	5.61
PCB-1232 Peak 4	5.81	5.78	5.82
PCB-1232 Peak 5	6.48	6.44	6.48

FORM VII
PCBS CONTINUING CALIBRATION DATA

Lab Name: TestAmerica Canton Job No.: 240-81698-1

SDG No.:

Lab Sample ID: ICV 240-285960/36 Calibration Date: 07/06/2017 01:23

Instrument ID: A2HP4 Calib Start Date: 07/05/2017 16:52

GC Column: CLP-1 (0.53mm) ID: 0.53(mm) Calib End Date: 07/05/2017 18:29

Lab File ID: P40705036.D Conc. Units: ng/uL

ANALYTE	CURVE TYPE	AVE RRF	RRF	MIN RRF	CALC AMOUNT	SPIKE AMOUNT	%D	MAX %D
PCB-1242 Peak 1	Lin1		0.0163		0.734	1.00	-26.6*	20.0
PCB-1242 Peak 2	Lin1		0.0327		0.862	1.00	-13.8	20.0
PCB-1242 Peak 3	Lin1		0.0728		0.894	1.00	-10.6	20.0
PCB-1242 Peak 4	Lin1		0.0312		0.891	1.00	-10.9	20.0
PCB-1242 Peak 5	Lin1		0.0127		0.889	1.00	-11.1	20.0

FORM VII
PCBS CONTINUING CALIBRATION RETENTION TIME SUMMARY

Lab Name: TestAmerica Canton Job No.: 240-81698-1

SDG No.:

Lab Sample ID: ICV 240-285960/36 Calibration Date: 07/06/2017 01:23

Instrument ID: A2HP4 Calib Start Date: 07/05/2017 16:52

GC Column: CLP-1 (0.53mm) ID: 0.53(mm) Calib End Date: 07/05/2017 18:29

Lab File ID: P40705036.D

Analyte	RT	RT WINDOW	
		FROM	TO
PCB-1242 Peak 1	3.29	3.26	3.30
PCB-1242 Peak 2	3.90	3.86	3.90
PCB-1242 Peak 3	4.64	4.62	4.65
PCB-1242 Peak 4	4.85	4.82	4.86
PCB-1242 Peak 5	5.23	5.20	5.24

FORM VII
PCBS CONTINUING CALIBRATION DATA

Lab Name: TestAmerica Canton Job No.: 240-81698-1

SDG No.:

Lab Sample ID: ICV 240-285960/36 Calibration Date: 07/06/2017 01:23

Instrument ID: A2HP4 Calib Start Date: 07/05/2017 16:52

GC Column: CLP-2 (0.53mm) ID: 0.53(mm) Calib End Date: 07/05/2017 18:29

Lab File ID: P40705036.D Conc. Units: ng/uL

ANALYTE	CURVE TYPE	AVE RRF	RRF	MIN RRF	CALC AMOUNT	SPIKE AMOUNT	%D	MAX %D
PCB-1242 Peak 1	Lin1		0.0175		0.842	1.00	-15.8	20.0
PCB-1242 Peak 2	Lin1		0.0325		0.867	1.00	-13.3	20.0
PCB-1242 Peak 3	Lin1		0.0697		0.896	1.00	-10.4	20.0
PCB-1242 Peak 4	Lin1		0.0266		0.852	1.00	-14.8	20.0
PCB-1242 Peak 5	Lin1		0.0225		0.915	1.00	-8.5	20.0

FORM VII
PCBS CONTINUING CALIBRATION RETENTION TIME SUMMARY

Lab Name: TestAmerica Canton Job No.: 240-81698-1

SDG No.:

Lab Sample ID: ICV 240-285960/36 Calibration Date: 07/06/2017 01:23

Instrument ID: A2HP4 Calib Start Date: 07/05/2017 16:52

GC Column: CLP-2 (0.53mm) ID: 0.53(mm) Calib End Date: 07/05/2017 18:29

Lab File ID: P40705036.D

Analyte	RT	RT WINDOW	
		FROM	TO
PCB-1242 Peak 1	4.22	4.19	4.23
PCB-1242 Peak 2	4.90	4.87	4.91
PCB-1242 Peak 3	5.61	5.58	5.61
PCB-1242 Peak 4	5.81	5.78	5.82
PCB-1242 Peak 5	6.47	6.44	6.48

FORM VII
PCBS CONTINUING CALIBRATION DATA

Lab Name: TestAmerica Canton Job No.: 240-81698-1

SDG No.:

Lab Sample ID: ICV 240-285960/37 Calibration Date: 07/06/2017 01:43

Instrument ID: A2HP4 Calib Start Date: 07/05/2017 18:49

GC Column: CLP-1 (0.53mm) ID: 0.53(mm) Calib End Date: 07/05/2017 20:28

Lab File ID: P40705037.D Conc. Units: ng/uL

ANALYTE	CURVE TYPE	AVE RRF	RRF	MIN RRF	CALC AMOUNT	SPIKE AMOUNT	%D	MAX %D
PCB-1248 Peak 1	Lin1		0.0151		0.887	1.00	-11.3	20.0
PCB-1248 Peak 2	Lin1		0.0439		0.994	1.00	-0.6	20.0
PCB-1248 Peak 3	Lin1		0.0404		1.03	1.00	2.8	20.0
PCB-1248 Peak 4	Lin1		0.0319		0.978	1.00	-2.2	20.0
PCB-1248 Peak 5	Lin1		0.0187		0.890	1.00	-11.0	20.0

FORM VII
PCBS CONTINUING CALIBRATION RETENTION TIME SUMMARY

Lab Name: TestAmerica Canton Job No.: 240-81698-1

SDG No.:

Lab Sample ID: ICV 240-285960/37 Calibration Date: 07/06/2017 01:43

Instrument ID: A2HP4 Calib Start Date: 07/05/2017 18:49

GC Column: CLP-1 (0.53mm) ID: 0.53(mm) Calib End Date: 07/05/2017 20:28

Lab File ID: P40705037.D

Analyte	RT	RT WINDOW	
		FROM	TO
PCB-1248 Peak 1	3.89	3.88	3.92
PCB-1248 Peak 2	5.47	5.45	5.49
PCB-1248 Peak 3	6.08	6.08	6.11
PCB-1248 Peak 4	6.38	6.37	6.40
PCB-1248 Peak 5	6.86	6.84	6.88

FORM VII
PCBS CONTINUING CALIBRATION DATA

Lab Name: TestAmerica Canton Job No.: 240-81698-1

SDG No.:

Lab Sample ID: ICV 240-285960/37 Calibration Date: 07/06/2017 01:43

Instrument ID: A2HP4 Calib Start Date: 07/05/2017 18:49

GC Column: CLP-2 (0.53mm) ID: 0.53(mm) Calib End Date: 07/05/2017 20:28

Lab File ID: P40705037.D Conc. Units: ng/uL

ANALYTE	CURVE TYPE	AVE RRF	RRF	MIN RRF	CALC AMOUNT	SPIKE AMOUNT	%D	MAX %D
PCB-1248 Peak 1	Lin1		0.0151		0.905	1.00	-9.5	20.0
PCB-1248 Peak 2	Lin1		0.0455		1.09	1.00	8.8	20.0
PCB-1248 Peak 3	Lin1		0.0316		0.999	1.00	-0.1	20.0
PCB-1248 Peak 4	Lin1		0.0425		1.09	1.00	9.4	20.0
PCB-1248 Peak 5	Lin1		0.0191		0.980	1.00	-2.0	20.0

FORM VII
PCBS CONTINUING CALIBRATION RETENTION TIME SUMMARY

Lab Name: TestAmerica Canton Job No.: 240-81698-1

SDG No.:

Lab Sample ID: ICV 240-285960/37 Calibration Date: 07/06/2017 01:43

Instrument ID: A2HP4 Calib Start Date: 07/05/2017 18:49

GC Column: CLP-2 (0.53mm) ID: 0.53(mm) Calib End Date: 07/05/2017 20:28

Lab File ID: P40705037.D

Analyte	RT	RT WINDOW	
		FROM	TO
PCB-1248 Peak 1	4.90	4.89	4.93
PCB-1248 Peak 2	5.60	5.59	5.63
PCB-1248 Peak 3	6.47	6.46	6.50
PCB-1248 Peak 4	6.99	6.97	7.01
PCB-1248 Peak 5	7.66	7.65	7.69

FORM VII
PCBS CONTINUING CALIBRATION DATA

Lab Name: TestAmerica Canton Job No.: 240-81698-1

SDG No.:

Lab Sample ID: ICV 240-285960/38 Calibration Date: 07/06/2017 02:02

Instrument ID: A2HP4 Calib Start Date: 07/05/2017 20:47

GC Column: CLP-1 (0.53mm) ID: 0.53(mm) Calib End Date: 07/05/2017 22:26

Lab File ID: P40705038.D Conc. Units: ng/uL

ANALYTE	CURVE TYPE	AVE RRF	RRF	MIN RRF	CALC AMOUNT	SPIKE AMOUNT	%D	MAX %D
PCB-1254 Peak 1	Lin1		0.0531		1.14	1.00	13.9	20.0
PCB-1254 Peak 2	Lin1		0.0717		1.10	1.00	10.0	20.0
PCB-1254 Peak 3	Lin1		0.0556		1.11	1.00	11.3	20.0
PCB-1254 Peak 4	Lin1		0.0529		1.16	1.00	16.2	20.0
PCB-1254 Peak 5	Lin1		0.0796		1.19	1.00	18.6	20.0

FORM VII
PCBS CONTINUING CALIBRATION RETENTION TIME SUMMARY

Lab Name: TestAmerica Canton Job No.: 240-81698-1

SDG No.:

Lab Sample ID: ICV 240-285960/38 Calibration Date: 07/06/2017 02:02

Instrument ID: A2HP4 Calib Start Date: 07/05/2017 20:47

GC Column: CLP-1 (0.53mm) ID: 0.53(mm) Calib End Date: 07/05/2017 22:26

Lab File ID: P40705038.D

Analyte	RT	RT WINDOW	
		FROM	TO
PCB-1254 Peak 1	6.38	6.37	6.41
PCB-1254 Peak 2	6.86	6.84	6.88
PCB-1254 Peak 3	7.17	7.16	7.19
PCB-1254 Peak 4	7.37	7.35	7.39
PCB-1254 Peak 5	7.64	7.63	7.67

FORM VII
PCBS CONTINUING CALIBRATION DATA

Lab Name: TestAmerica Canton Job No.: 240-81698-1

SDG No.:

Lab Sample ID: ICV 240-285960/38 Calibration Date: 07/06/2017 02:02

Instrument ID: A2HP4 Calib Start Date: 07/05/2017 20:47

GC Column: CLP-2 (0.53mm) ID: 0.53(mm) Calib End Date: 07/05/2017 22:26

Lab File ID: P40705038.D Conc. Units: ng/uL

ANALYTE	CURVE TYPE	AVE RRF	RRF	MIN RRF	CALC AMOUNT	SPIKE AMOUNT	%D	MAX %D
PCB-1254 Peak 1	Lin1		0.0393		1.11	1.00	11.1	20.0
PCB-1254 Peak 2	Lin1		0.0462		1.13	1.00	12.9	20.0
PCB-1254 Peak 3	Lin1		0.0636		1.12	1.00	11.7	20.0
PCB-1254 Peak 4	Lin1		0.0467		1.12	1.00	11.7	20.0
PCB-1254 Peak 5	Lin1		0.0669		1.20	1.00	19.8	20.0

FORM VII
PCBS CONTINUING CALIBRATION RETENTION TIME SUMMARY

Lab Name: TestAmerica Canton Job No.: 240-81698-1

SDG No.:

Lab Sample ID: ICV 240-285960/38 Calibration Date: 07/06/2017 02:02

Instrument ID: A2HP4 Calib Start Date: 07/05/2017 20:47

GC Column: CLP-2 (0.53mm) ID: 0.53(mm) Calib End Date: 07/05/2017 22:26

Lab File ID: P40705038.D

Analyte	RT	RT WINDOW	
		FROM	TO
PCB-1254 Peak 1	6.98	6.97	7.00
PCB-1254 Peak 2	7.20	7.19	7.22
PCB-1254 Peak 3	7.67	7.65	7.69
PCB-1254 Peak 4	7.89	7.87	7.91
PCB-1254 Peak 5	8.37	8.36	8.40

FORM VII
PCBS CONTINUING CALIBRATION DATA

Lab Name: TestAmerica Canton Job No.: 240-81698-1

SDG No.:

Lab Sample ID: ICV 240-285960/39 Calibration Date: 07/06/2017 02:22

Instrument ID: A2HP4 Calib Start Date: 07/05/2017 22:46

GC Column: CLP-1 (0.53mm) ID: 0.53(mm) Calib End Date: 07/06/2017 00:24

Lab File ID: P40705039.D Conc. Units: ng/uL

ANALYTE	CURVE TYPE	AVE RRF	RRF	MIN RRF	CALC AMOUNT	SPIKE AMOUNT	%D	MAX %D
PCB-1016 Peak 1	Lin1		0.0198		0.859	1.00	-14.1	20.0
PCB-1016 Peak 2	Lin1		0.0400		0.947	1.00	-5.3	20.0
PCB-1016 Peak 3	Lin1		0.0895		0.951	1.00	-4.9	20.0
PCB-1016 Peak 4	Lin1		0.0380		0.952	1.00	-4.8	20.0
PCB-1016 Peak 5	Lin1		0.0159		0.964	1.00	-3.6	20.0
PCB-1260 Peak 1	Lin1		0.0518		0.885	1.00	-11.5	20.0
PCB-1260 Peak 2	Lin1		0.0819		0.870	1.00	-13.0	20.0
PCB-1260 Peak 3	Lin1		0.0863		0.835	1.00	-16.5	20.0
PCB-1260 Peak 4	Lin1		0.1216		0.933	1.00	-6.7	20.0
PCB-1260 Peak 5	Lin1		0.0603		0.923	1.00	-7.7	20.0
Tetrachloro-m-xylene	Ave	1.131	1.088		0.0481	0.0500	-3.8	20.0
DCB Decachlorobiphenyl	Ave	0.9835	0.9205		0.0468	0.0500	-6.4	20.0

FORM VII
PCBS CONTINUING CALIBRATION RETENTION TIME SUMMARY

Lab Name: TestAmerica Canton Job No.: 240-81698-1

SDG No.:

Lab Sample ID: ICV 240-285960/39 Calibration Date: 07/06/2017 02:22

Instrument ID: A2HP4 Calib Start Date: 07/05/2017 22:46

GC Column: CLP-1 (0.53mm) ID: 0.53(mm) Calib End Date: 07/06/2017 00:24

Lab File ID: P40705039.D

Analyte	RT	RT WINDOW	
		FROM	TO
PCB-1016 Peak 1	3.29	3.28	3.32
PCB-1016 Peak 2	3.90	3.88	3.92
PCB-1016 Peak 3	4.64	4.63	4.67
PCB-1016 Peak 4	4.85	4.83	4.87
PCB-1016 Peak 5	5.23	5.21	5.25
PCB-1260 Peak 1	7.07	7.05	7.09
PCB-1260 Peak 2	7.37	7.35	7.39
PCB-1260 Peak 3	7.64	7.63	7.67
PCB-1260 Peak 4	8.28	8.26	8.30
PCB-1260 Peak 5	8.52	8.50	8.54
Tetrachloro-m-xylene	2.65	2.64	2.68
DCB Decachlorobiphenyl	9.43	9.42	9.46

FORM VII
PCBS CONTINUING CALIBRATION DATA

Lab Name: TestAmerica Canton Job No.: 240-81698-1

SDG No.:

Lab Sample ID: ICV 240-285960/39 Calibration Date: 07/06/2017 02:22

Instrument ID: A2HP4 Calib Start Date: 07/05/2017 22:46

GC Column: CLP-2 (0.53mm) ID: 0.53(mm) Calib End Date: 07/06/2017 00:24

Lab File ID: P40705039.D Conc. Units: ng/uL

ANALYTE	CURVE TYPE	AVE RRF	RRF	MIN RRF	CALC AMOUNT	SPIKE AMOUNT	%D	MAX %D
PCB-1016 Peak 1	Lin1		0.0198		0.923	1.00	-7.7	20.0
PCB-1016 Peak 2	Lin1		0.0400		0.951	1.00	-4.9	20.0
PCB-1016 Peak 3	Lin1		0.0878		0.956	1.00	-4.4	20.0
PCB-1016 Peak 4	Lin1		0.0340		0.946	1.00	-5.4	20.0
PCB-1016 Peak 5	Lin1		0.0264		0.922	1.00	-7.8	20.0
PCB-1260 Peak 1	Lin1		0.0467		0.853	1.00	-14.7	20.0
PCB-1260 Peak 2	Lin1		0.0552		0.878	1.00	-12.2	20.0
PCB-1260 Peak 3	Lin1		0.0731		0.835	1.00	-16.5	20.0
PCB-1260 Peak 4	Lin1		0.1045		0.938	1.00	-6.2	20.0
PCB-1260 Peak 5	Lin1		0.0707		0.916	1.00	-8.4	20.0
Tetrachloro-m-xylene	Ave	1.070	1.085		0.0507	0.0500	1.4	20.0
DCB Decachlorobiphenyl	Ave	0.8530	0.7790		0.0457	0.0500	-8.7	20.0

FORM VII
PCBS CONTINUING CALIBRATION RETENTION TIME SUMMARY

Lab Name: TestAmerica Canton Job No.: 240-81698-1

SDG No.:

Lab Sample ID: ICV 240-285960/39 Calibration Date: 07/06/2017 02:22

Instrument ID: A2HP4 Calib Start Date: 07/05/2017 22:46

GC Column: CLP-2 (0.53mm) ID: 0.53(mm) Calib End Date: 07/06/2017 00:24

Lab File ID: P40705039.D

Analyte	RT	RT WINDOW	
		FROM	TO
PCB-1016 Peak 1	4.22	4.21	4.25
PCB-1016 Peak 2	4.90	4.89	4.93
PCB-1016 Peak 3	5.61	5.59	5.63
PCB-1016 Peak 4	5.81	5.79	5.83
PCB-1016 Peak 5	6.47	6.46	6.50
PCB-1260 Peak 1	7.86	7.84	7.88
PCB-1260 Peak 2	8.06	8.04	8.08
PCB-1260 Peak 3	8.37	8.36	8.39
PCB-1260 Peak 4	8.92	8.90	8.94
PCB-1260 Peak 5	9.22	9.20	9.24
Tetrachloro-m-xylene	3.29	3.28	3.32
DCB Decachlorobiphenyl	10.14	10.13	10.17

FORM VII
PCBS CONTINUING CALIBRATION DATA

Lab Name: TestAmerica Canton Job No.: 240-81698-1

SDG No.:

Lab Sample ID: CCV 240-286194/3 Calibration Date: 07/07/2017 05:24

Instrument ID: A2HP4 Calib Start Date: 07/05/2017 22:46

GC Column: CLP-1 (0.53mm) ID: 0.53(mm) Calib End Date: 07/06/2017 00:24

Lab File ID: P40707003.D Conc. Units: ng/uL

ANALYTE	CURVE TYPE	AVE RRF	RRF	MIN RRF	CALC AMOUNT	SPIKE AMOUNT	%D	MAX %D
PCB-1016 Peak 1	Lin1		0.0240		0.505	0.500	1.1	20.0
PCB-1016 Peak 2	Lin1		0.0459		0.535	0.500	7.0	20.0
PCB-1016 Peak 3	Lin1		0.1041		0.549	0.500	9.8	20.0
PCB-1016 Peak 4	Lin1		0.0433		0.537	0.500	7.3	20.0
PCB-1016 Peak 5	Lin1		0.0193		0.580	0.500	16.0	20.0
PCB-1260 Peak 1	Lin1		0.0659		0.558	0.500	11.7	20.0
PCB-1260 Peak 2	Lin1		0.1074		0.563	0.500	12.7	20.0
PCB-1260 Peak 3	Lin1		0.1180		0.568	0.500	13.7	20.0
PCB-1260 Peak 4	Lin1		0.1491		0.567	0.500	13.4	20.0
PCB-1260 Peak 5	Lin1		0.0749		0.572	0.500	14.4	20.0
Tetrachloro-m-xylene	Ave	1.131	1.135		0.0251	0.0250	0.3	20.0
DCB Decachlorobiphenyl	Ave	0.9835	0.9440		0.0240	0.0250	-4.0	20.0

FORM VII
PCBS CONTINUING CALIBRATION RETENTION TIME SUMMARY

Lab Name: TestAmerica Canton Job No.: 240-81698-1

SDG No.:

Lab Sample ID: CCV 240-286194/3 Calibration Date: 07/07/2017 05:24

Instrument ID: A2HP4 Calib Start Date: 07/05/2017 22:46

GC Column: CLP-1 (0.53mm) ID: 0.53(mm) Calib End Date: 07/06/2017 00:24

Lab File ID: P40707003.D

Analyte	RT	RT WINDOW	
		FROM	TO
PCB-1016 Peak 1	3.30	3.28	3.32
PCB-1016 Peak 2	3.91	3.89	3.93
PCB-1016 Peak 3	4.66	4.64	4.67
PCB-1016 Peak 4	4.86	4.84	4.88
PCB-1016 Peak 5	5.24	5.22	5.26
PCB-1260 Peak 1	7.08	7.06	7.09
PCB-1260 Peak 2	7.37	7.36	7.39
PCB-1260 Peak 3	7.65	7.63	7.67
PCB-1260 Peak 4	8.28	8.26	8.30
PCB-1260 Peak 5	8.53	8.51	8.55
Tetrachloro-m-xylene	2.66	2.64	2.68
DCB Decachlorobiphenyl	9.44	9.42	9.46

FORM VII
PCBS CONTINUING CALIBRATION DATA

Lab Name: TestAmerica Canton Job No.: 240-81698-1

SDG No.:

Lab Sample ID: CCV 240-286194/4 Calibration Date: 07/07/2017 05:43

Instrument ID: A2HP4 Calib Start Date: 07/05/2017 14:55

GC Column: CLP-1 (0.53mm) ID: 0.53(mm) Calib End Date: 07/05/2017 16:33

Lab File ID: P40707004.D Conc. Units: ng/uL

ANALYTE	CURVE TYPE	AVE RRF	RRF	MIN RRF	CALC AMOUNT	SPIKE AMOUNT	%D	MAX %D
PCB-1232 Peak 1	Lin1		0.0217		0.448	0.500	-10.4	20.0
PCB-1232 Peak 2	Lin1		0.0175		0.500	0.500	-0.0	20.0
PCB-1232 Peak 3	Lin1		0.0380		0.548	0.500	9.5	20.0
PCB-1232 Peak 4	Lin1		0.0161		0.521	0.500	4.3	20.0
PCB-1232 Peak 5	Lin1		0.0066		0.596	0.500	19.1	20.0
PCB-1262 Peak 1	Lin1		0.0401		0.583	0.500	16.6	20.0
PCB-1262 Peak 2	Lin1		0.0580		0.604	0.500	20.8*	20.0
PCB-1262 Peak 3	Lin1		0.0649		0.591	0.500	18.2	20.0
PCB-1262 Peak 4	Lin1		0.1382		0.587	0.500	17.5	20.0
PCB-1262 Peak 5	Lin1		0.0557		0.575	0.500	15.1	20.0

FORM VII
PCBS CONTINUING CALIBRATION RETENTION TIME SUMMARY

Lab Name: TestAmerica Canton Job No.: 240-81698-1

SDG No.:

Lab Sample ID: CCV 240-286194/4 Calibration Date: 07/07/2017 05:43

Instrument ID: A2HP4 Calib Start Date: 07/05/2017 14:55

GC Column: CLP-1 (0.53mm) ID: 0.53(mm) Calib End Date: 07/05/2017 16:33

Lab File ID: P40707004.D

Analyte	RT	RT WINDOW	
		FROM	TO
PCB-1232 Peak 1	3.30	3.28	3.32
PCB-1232 Peak 2	3.91	3.89	3.93
PCB-1232 Peak 3	4.65	4.64	4.67
PCB-1232 Peak 4	4.86	4.84	4.88
PCB-1232 Peak 5	5.24	5.22	5.26
PCB-1262 Peak 1	7.07	7.05	7.09
PCB-1262 Peak 2	7.37	7.35	7.39
PCB-1262 Peak 3	7.99	7.98	8.01
PCB-1262 Peak 4	8.28	8.26	8.30
PCB-1262 Peak 5	8.56	8.54	8.58

FORM VII
PCBS CONTINUING CALIBRATION DATA

Lab Name: TestAmerica Canton Job No.: 240-81698-1

SDG No.:

Lab Sample ID: CCV 240-286194/5 Calibration Date: 07/07/2017 06:03

Instrument ID: A2HP4 Calib Start Date: 07/05/2017 16:52

GC Column: CLP-1 (0.53mm) ID: 0.53(mm) Calib End Date: 07/05/2017 18:29

Lab File ID: P40707005.D Conc. Units: ng/uL

ANALYTE	CURVE TYPE	AVE RRF	RRF	MIN RRF	CALC AMOUNT	SPIKE AMOUNT	%D	MAX %D
PCB-1242 Peak 1	Lin1		0.0199		0.437	0.500	-12.6	20.0
PCB-1242 Peak 2	Lin1		0.0385		0.501	0.500	0.2	20.0
PCB-1242 Peak 3	Lin1		0.0872		0.535	0.500	6.9	20.0
PCB-1242 Peak 4	Lin1		0.0366		0.520	0.500	4.1	20.0
PCB-1242 Peak 5	Lin1		0.0162		0.564	0.500	12.9	20.0
PCB-1268 Peak 1	Ave	0.1764	0.2055		0.582	0.500	16.5	20.0
PCB-1268 Peak 2	Ave	0.1708	0.1940		0.568	0.500	13.6	20.0
PCB-1268 Peak 3	Ave	0.1456	0.1649		0.566	0.500	13.2	20.0
PCB-1268 Peak 4	Ave	0.0603	0.0680		0.563	0.500	12.6	20.0
PCB-1268 Peak 5	Ave	0.4327	0.4725		0.546	0.500	9.2	20.0

FORM VII
PCBS CONTINUING CALIBRATION RETENTION TIME SUMMARY

Lab Name: TestAmerica Canton Job No.: 240-81698-1

SDG No.:

Lab Sample ID: CCV 240-286194/5 Calibration Date: 07/07/2017 06:03

Instrument ID: A2HP4 Calib Start Date: 07/05/2017 16:52

GC Column: CLP-1 (0.53mm) ID: 0.53(mm) Calib End Date: 07/05/2017 18:29

Lab File ID: P40707005.D

Analyte	RT	RT WINDOW	
		FROM	TO
PCB-1242 Peak 1	3.30	3.28	3.31
PCB-1242 Peak 2	3.90	3.88	3.92
PCB-1242 Peak 3	4.65	4.63	4.67
PCB-1242 Peak 4	4.85	4.83	4.87
PCB-1242 Peak 5	5.23	5.21	5.25
PCB-1268 Peak 1	8.56	8.54	8.58
PCB-1268 Peak 2	8.59	8.57	8.61
PCB-1268 Peak 3	8.75	8.74	8.77
PCB-1268 Peak 4	9.05	9.03	9.07
PCB-1268 Peak 5	9.28	9.27	9.30

FORM VII
PCBS CONTINUING CALIBRATION DATA

Lab Name: TestAmerica Canton Job No.: 240-81698-1

SDG No.:

Lab Sample ID: CCV 240-286194/6 Calibration Date: 07/07/2017 06:23

Instrument ID: A2HP4 Calib Start Date: 07/05/2017 18:49

GC Column: CLP-1 (0.53mm) ID: 0.53(mm) Calib End Date: 07/05/2017 20:28

Lab File ID: P40707006.D Conc. Units: ng/uL

ANALYTE	CURVE TYPE	AVE RRF	RRF	MIN RRF	CALC AMOUNT	SPIKE AMOUNT	%D	MAX %D
PCB-1248 Peak 1	Lin1		0.0176		0.509	0.500	1.8	20.0
PCB-1248 Peak 2	Lin1		0.0495		0.557	0.500	11.4	20.0
PCB-1248 Peak 3	Lin1		0.0447		0.571	0.500	14.3	20.0
PCB-1248 Peak 4	Lin1		0.0379		0.579	0.500	15.9	20.0
PCB-1248 Peak 5	Lin1		0.0245		0.583	0.500	16.5	20.0

FORM VII
PCBS CONTINUING CALIBRATION RETENTION TIME SUMMARY

Lab Name: TestAmerica Canton Job No.: 240-81698-1

SDG No.:

Lab Sample ID: CCV 240-286194/6 Calibration Date: 07/07/2017 06:23

Instrument ID: A2HP4 Calib Start Date: 07/05/2017 18:49

GC Column: CLP-1 (0.53mm) ID: 0.53(mm) Calib End Date: 07/05/2017 20:28

Lab File ID: P40707006.D

Analyte	RT	RT WINDOW	
		FROM	TO
PCB-1248 Peak 1	3.90	3.88	3.92
PCB-1248 Peak 2	5.47	5.45	5.49
PCB-1248 Peak 3	6.09	6.07	6.11
PCB-1248 Peak 4	6.38	6.36	6.40
PCB-1248 Peak 5	6.86	6.84	6.88

FORM VII
PCBS CONTINUING CALIBRATION DATA

Lab Name: TestAmerica Canton Job No.: 240-81698-1

SDG No.:

Lab Sample ID: CCV 240-286194/7 Calibration Date: 07/07/2017 06:42

Instrument ID: A2HP4 Calib Start Date: 07/05/2017 20:47

GC Column: CLP-1 (0.53mm) ID: 0.53(mm) Calib End Date: 07/05/2017 22:26

Lab File ID: P40707007.D Conc. Units: ng/uL

ANALYTE	CURVE TYPE	AVE RRF	RRF	MIN RRF	CALC AMOUNT	SPIKE AMOUNT	%D	MAX %D
PCB-1221 Peak 1	Lin1		0.0107		0.502	0.500	0.3	20.0
PCB-1221 Peak 2	Lin1		0.0069		0.496	0.500	-0.7	20.0
PCB-1221 Peak 3	Lin1		0.0267		0.499	0.500	-0.3	20.0
PCB-1254 Peak 1	Lin1		0.0513		0.543	0.500	8.7	20.0
PCB-1254 Peak 2	Lin1		0.0713		0.545	0.500	9.0	20.0
PCB-1254 Peak 3	Lin1		0.0537		0.545	0.500	9.0	20.0
PCB-1254 Peak 4	Lin1		0.0495		0.541	0.500	8.2	20.0
PCB-1254 Peak 5	Lin1		0.0734		0.546	0.500	9.1	20.0

FORM VII
PCBS CONTINUING CALIBRATION RETENTION TIME SUMMARY

Lab Name: TestAmerica Canton Job No.: 240-81698-1

SDG No.:

Lab Sample ID: CCV 240-286194/7 Calibration Date: 07/07/2017 06:42

Instrument ID: A2HP4 Calib Start Date: 07/05/2017 20:47

GC Column: CLP-1 (0.53mm) ID: 0.53(mm) Calib End Date: 07/05/2017 22:26

Lab File ID: P40707007.D

Analyte	RT	RT WINDOW	
		FROM	TO
PCB-1221 Peak 1	2.98	2.96	3.00
PCB-1221 Peak 2	3.23	3.21	3.25
PCB-1221 Peak 3	3.30	3.28	3.32
PCB-1254 Peak 1	6.39	6.37	6.41
PCB-1254 Peak 2	6.86	6.84	6.88
PCB-1254 Peak 3	7.17	7.15	7.19
PCB-1254 Peak 4	7.37	7.35	7.39
PCB-1254 Peak 5	7.65	7.63	7.67

FORM I
PCBS ORGANICS ANALYSIS DATA SHEET

Lab Name: TestAmerica Canton
Job No.: 240-81698-1
SDG No.:
Client Sample ID:
Lab Sample ID: MB 240-285524/15-A
Matrix: Water
Lab File ID: P11070527.D
Analysis Method: 8082A
Date Collected:
Extraction Method: 3520C
Date Extracted: 06/30/2017 09:17
Sample wt/vol: 1000(mL)
Date Analyzed: 07/05/2017 17:13
Con. Extract Vol.: 2(mL)
Dilution Factor: 1
Injection Volume: 1(uL)
GC Column: CLP-2 (0.53mm) ID: 0.53(mm)
% Moisture:
GPC Cleanup:(Y/N) N
Analysis Batch No.: 285854
Units: ug/L

CAS NO.	COMPOUND NAME	RESULT	Q	RL	MDL
12674-11-2	Aroclor-1016	0.050	U	0.10	0.050
11104-28-2	Aroclor-1221	0.090	U	0.10	0.090
11141-16-5	Aroclor-1232	0.070	U	0.10	0.070
53469-21-9	Aroclor-1242	0.060	U	0.10	0.060
12672-29-6	Aroclor-1248	0.050	U	0.10	0.050
11097-69-1	Aroclor-1254	0.030	U	0.10	0.030
11096-82-5	Aroclor-1260	0.040	U	0.10	0.040

CAS NO.	SURROGATE	%REC	Q	LIMITS
877-09-8	Tetrachloro-m-xylene	59		21-120
2051-24-3	DCB Decachlorobiphenyl	68		10-120

FORM I
PCBS ORGANICS ANALYSIS DATA SHEET

Lab Name: TestAmerica Canton
Job No.: 240-81698-1
SDG No.:
Client Sample ID:
Lab Sample ID: MB 240-285979/22-A
Matrix: Solid
Lab File ID: P40707027.D
Analysis Method: 8082A
Date Collected:
Extraction Method: 3540C
Date Extracted: 07/05/2017 13:32
Sample wt/vol: 10(g)
Date Analyzed: 07/07/2017 13:18
Con. Extract Vol.: 10(mL)
Dilution Factor: 1
Injection Volume: 1(uL)
GC Column: CLP-1 (0.53mm) ID: 0.53(mm)
% Moisture:
GPC Cleanup:(Y/N) N
Analysis Batch No.: 286194
Units: ug/Kg

CAS NO.	COMPOUND NAME	RESULT	Q	RL	MDL
12674-11-2	Aroclor-1016	24	U	50	24
11104-28-2	Aroclor-1221	23	U	50	23
11141-16-5	Aroclor-1232	16	U	50	16
53469-21-9	Aroclor-1242	20	U	50	20
12672-29-6	Aroclor-1248	17	U	50	17
11097-69-1	Aroclor-1254	14	U	50	14
11096-82-5	Aroclor-1260	18	U	50	18

CAS NO.	SURROGATE	%REC	Q	LIMITS
877-09-8	Tetrachloro-m-xylene	72		14-128
2051-24-3	DCB Decachlorobiphenyl	83		10-132

FORM I
PCBS ORGANICS ANALYSIS DATA SHEET

Lab Name: TestAmerica Canton
Job No.: 240-81698-1
SDG No.:
Client Sample ID:
Lab Sample ID: LCS 240-285524/16-A
Matrix: Water
Lab File ID: P11070528.D
Analysis Method: 8082A
Date Collected:
Extraction Method: 3520C
Date Extracted: 06/30/2017 09:17
Sample wt/vol: 1000(mL)
Date Analyzed: 07/05/2017 17:32
Con. Extract Vol.: 2(mL)
Dilution Factor: 1
Injection Volume: 1(uL)
GC Column: CLP-2 (0.53mm) ID: 0.53(mm)
% Moisture:
GPC Cleanup:(Y/N) N
Analysis Batch No.: 285854
Units: ug/L

CAS NO.	COMPOUND NAME	RESULT	Q	RL	MDL
12674-11-2	Aroclor-1016	1.19		0.10	0.050
11096-82-5	Aroclor-1260	1.52		0.10	0.040

CAS NO.	SURROGATE	%REC	Q	LIMITS
877-09-8	Tetrachloro-m-xylene	54		21-120
2051-24-3	DCB Decachlorobiphenyl	68		10-120

FORM I
PCBS ORGANICS ANALYSIS DATA SHEET

Lab Name: TestAmerica Canton
Job No.: 240-81698-1
SDG No.:
Client Sample ID:
Lab Sample ID: LCS 240-285979/23-A
Matrix: Solid
Lab File ID: P40707028.D
Analysis Method: 8082A
Date Collected:
Extraction Method: 3540C
Date Extracted: 07/05/2017 13:32
Sample wt/vol: 10(g)
Date Analyzed: 07/07/2017 13:37
Con. Extract Vol.: 10(mL)
Dilution Factor: 1
Injection Volume: 1(uL)
GC Column: CLP-1 (0.53mm) ID: 0.53(mm)
% Moisture:
GPC Cleanup:(Y/N) N
Analysis Batch No.: 286194
Units: ug/Kg

CAS NO.	COMPOUND NAME	RESULT	Q	RL	MDL
12674-11-2	Aroclor-1016	529		50	24
11096-82-5	Aroclor-1260	610		50	18

CAS NO.	SURROGATE	%REC	Q	LIMITS
877-09-8	Tetrachloro-m-xylene	63		14-128
2051-24-3	DCB Decachlorobiphenyl	72		10-132

FORM I
PCBS ORGANICS ANALYSIS DATA SHEET

Lab Name: TestAmerica Canton
Job No.: 240-81698-1
SDG No.:
Client Sample ID: WC-SGEO-062817 MS
Lab Sample ID: 240-81698-5 MS
Matrix: Solid
Lab File ID: P40707011.D
Analysis Method: 8082A
Date Collected: 06/28/2017 08:15
Extraction Method: 3540C
Date Extracted: 07/05/2017 13:32
Sample wt/vol: 9.94(g)
Date Analyzed: 07/07/2017 08:01
Con. Extract Vol.: 10(mL)
Dilution Factor: 1
Injection Volume: 1(uL)
GC Column: CLP-1 (0.53mm) ID: 0.53(mm)
% Moisture: 12.0
GPC Cleanup:(Y/N) N
Analysis Batch No.: 286194
Units: ug/Kg

CAS NO.	COMPOUND NAME	RESULT	Q	RL	MDL
12674-11-2	Aroclor-1016	1060		57	27
11104-28-2	Aroclor-1221	26	U	57	26
11141-16-5	Aroclor-1232	18	U	57	18
53469-21-9	Aroclor-1242	23	U	57	23
12672-29-6	Aroclor-1248	19	U	57	19
11097-69-1	Aroclor-1254	16	U	57	16
11096-82-5	Aroclor-1260	996		57	21

CAS NO.	SURROGATE	%REC	Q	LIMITS
877-09-8	Tetrachloro-m-xylene	101		14-128
2051-24-3	DCB Decachlorobiphenyl	108		10-132

FORM I
PCBS ORGANICS ANALYSIS DATA SHEET

Lab Name: TestAmerica Canton | Job No.: 240-81698-1

SDG No.:

Client Sample ID: WC-SGEO-062817 MSD | Lab Sample ID: 240-81698-5 MSD

Matrix: Solid | Lab File ID: P40707012.D

Analysis Method: 8082A | Date Collected: 06/28/2017 08:15

Extraction Method: 3540C | Date Extracted: 07/05/2017 13:32

Sample wt/vol: 10.15(g) | Date Analyzed: 07/07/2017 08:21

Con. Extract Vol.: 10(mL) | Dilution Factor: 1

Injection Volume: 1(uL) | GC Column: CLP-1 (0.53mm) ID: 0.53(mm)

% Moisture: 12.0 | GPC Cleanup:(Y/N) N

Analysis Batch No.: 286194 | Units: ug/Kg

CAS NO.	COMPOUND NAME	RESULT	Q	RL	MDL
12674-11-2	Aroclor-1016	934		56	27
11104-28-2	Aroclor-1221	26	U	56	26
11141-16-5	Aroclor-1232	18	U	56	18
53469-21-9	Aroclor-1242	22	U	56	22
12672-29-6	Aroclor-1248	19	U	56	19
11097-69-1	Aroclor-1254	16	U	56	16
11096-82-5	Aroclor-1260	903		56	20

CAS NO.	SURROGATE	%REC	Q	LIMITS
877-09-8	Tetrachloro-m-xylene	90		14-128
2051-24-3	DCB Decachlorobiphenyl	117		10-132

PCBS ANALYSIS RUN LOG

Lab Name: TestAmerica Canton Job No.: 240-81698-1

SDG No.:

Instrument ID: A2HP11 Start Date: 06/04/2017 11:28

Analysis Batch Number: 281427 End Date: 06/04/2017 22:58

LAB SAMPLE ID	CLIENT SAMPLE ID	DATE ANALYZED	DILUTION FACTOR	LAB FILE ID	COLUMN ID
STD005 240-281427/4 IC		06/04/2017 11:28	1	P11060404.D	CLP-1 (0.53mm) 0.53(mm)
STD005 240-281427/4 IC		06/04/2017 11:28	1	P11060404.D	CLP-2 (0.53mm) 0.53(mm)
STD01 240-281427/5 IC		06/04/2017 11:47	1	P11060405.D	CLP-1 (0.53mm) 0.53(mm)
STD01 240-281427/5 IC		06/04/2017 11:47	1	P11060405.D	CLP-2 (0.53mm) 0.53(mm)
STD02 240-281427/6 IC		06/04/2017 12:06	1	P11060406.D	CLP-1 (0.53mm) 0.53(mm)
STD02 240-281427/6 IC		06/04/2017 12:06	1	P11060406.D	CLP-2 (0.53mm) 0.53(mm)
STD05 240-281427/7 IC		06/04/2017 12:24	1	P11060407.D	CLP-1 (0.53mm) 0.53(mm)
STD05 240-281427/7 IC		06/04/2017 12:24	1	P11060407.D	CLP-2 (0.53mm) 0.53(mm)
STD1 240-281427/8 IC		06/04/2017 12:43	1	P11060408.D	CLP-1 (0.53mm) 0.53(mm)
STD1 240-281427/8 IC		06/04/2017 12:43	1	P11060408.D	CLP-2 (0.53mm) 0.53(mm)
std1.5 1232 1262 IC		06/04/2017 13:02	1	P11060409.D	CLP-1 (0.53mm) 0.53(mm)
std1.5 1232 1262 IC		06/04/2017 13:02	1	P11060409.D	CLP-2 (0.53mm) 0.53(mm)
STD005 240-281427/10 IC		06/04/2017 13:20	1	P11060410.D	CLP-1 (0.53mm) 0.53(mm)
STD005 240-281427/10 IC		06/04/2017 13:20	1	P11060410.D	CLP-2 (0.53mm) 0.53(mm)
STD01 240-281427/11 IC		06/04/2017 13:39	1	P11060411.D	CLP-1 (0.53mm) 0.53(mm)
STD01 240-281427/11 IC		06/04/2017 13:39	1	P11060411.D	CLP-2 (0.53mm) 0.53(mm)
STD02 240-281427/12 IC		06/04/2017 13:57	1	P11060412.D	CLP-1 (0.53mm) 0.53(mm)
STD02 240-281427/12 IC		06/04/2017 13:57	1	P11060412.D	CLP-2 (0.53mm) 0.53(mm)
STD05 240-281427/13 IC		06/04/2017 14:16	1	P11060413.D	CLP-1 (0.53mm) 0.53(mm)
STD05 240-281427/13 IC		06/04/2017 14:16	1	P11060413.D	CLP-2 (0.53mm) 0.53(mm)
STD1 240-281427/14 IC		06/04/2017 14:35	1	P11060414.D	CLP-1 (0.53mm) 0.53(mm)
STD1 240-281427/14 IC		06/04/2017 14:35	1	P11060414.D	CLP-2 (0.53mm) 0.53(mm)
std1.5 1242 1268 IC		06/04/2017 14:53	1	P11060415.D	CLP-1 (0.53mm) 0.53(mm)
std1.5 1242 1268 IC		06/04/2017 14:53	1	P11060415.D	CLP-2 (0.53mm) 0.53(mm)
STD005 240-281427/16 IC		06/04/2017 15:12	1	P11060416.D	CLP-1 (0.53mm) 0.53(mm)
STD005 240-281427/16 IC		06/04/2017 15:12	1	P11060416.D	CLP-2 (0.53mm) 0.53(mm)
STD01 240-281427/17 IC		06/04/2017 15:31	1	P11060417.D	CLP-1 (0.53mm) 0.53(mm)
STD01 240-281427/17 IC		06/04/2017 15:31	1	P11060417.D	CLP-2 (0.53mm) 0.53(mm)
STD02 240-281427/18 IC		06/04/2017 15:49	1	P11060418.D	CLP-1 (0.53mm) 0.53(mm)
STD02 240-281427/18 IC		06/04/2017 15:49	1	P11060418.D	CLP-2 (0.53mm) 0.53(mm)
STD05 240-281427/19 IC		06/04/2017 16:08	1	P11060419.D	CLP-1 (0.53mm) 0.53(mm)
STD05 240-281427/19 IC		06/04/2017 16:08	1	P11060419.D	CLP-2 (0.53mm) 0.53(mm)
STD1 240-281427/20 IC		06/04/2017 16:26	1	P11060420.D	CLP-1 (0.53mm) 0.53(mm)

8082A

PCBS ANALYSIS RUN LOG

Lab Name: TestAmerica Canton Job No.: 240-81698-1

SDG No.:

Instrument ID: A2HP11 Start Date: 06/04/2017 11:28

Analysis Batch Number: 281427 End Date: 06/04/2017 22:58

LAB SAMPLE ID	CLIENT SAMPLE ID	DATE ANALYZED	DILUTION FACTOR	LAB FILE ID	COLUMN ID
STD1 240-281427/20 IC		06/04/2017 16:26	1	P11060420.D	CLP-2 (0.53mm) 0.53(mm)
std1.5 1248 IC		06/04/2017 16:45	1	P11060421.D	CLP-1 (0.53mm) 0.53(mm)
std1.5 1248 IC		06/04/2017 16:45	1	P11060421.D	CLP-2 (0.53mm) 0.53(mm)
STD005 240-281427/22 IC		06/04/2017 17:04	1	P11060422.D	CLP-1 (0.53mm) 0.53(mm)
STD005 240-281427/22 IC		06/04/2017 17:04	1	P11060422.D	CLP-2 (0.53mm) 0.53(mm)
STD01 240-281427/23 IC		06/04/2017 17:22	1	P11060423.D	CLP-1 (0.53mm) 0.53(mm)
STD01 240-281427/23 IC		06/04/2017 17:22	1	P11060423.D	CLP-2 (0.53mm) 0.53(mm)
STD02 240-281427/24 IC		06/04/2017 17:41	1	P11060424.D	CLP-1 (0.53mm) 0.53(mm)
STD02 240-281427/24 IC		06/04/2017 17:41	1	P11060424.D	CLP-2 (0.53mm) 0.53(mm)
STD05 240-281427/25 IC		06/04/2017 18:00	1	P11060425.D	CLP-1 (0.53mm) 0.53(mm)
STD05 240-281427/25 IC		06/04/2017 18:00	1	P11060425.D	CLP-2 (0.53mm) 0.53(mm)
STD1 240-281427/26 IC		06/04/2017 18:18	1	P11060426.D	CLP-1 (0.53mm) 0.53(mm)
STD1 240-281427/26 IC		06/04/2017 18:18	1	P11060426.D	CLP-2 (0.53mm) 0.53(mm)
std1.5 ar2154 IC		06/04/2017 18:37	1	P11060427.D	CLP-1 (0.53mm) 0.53(mm)
std1.5 ar2154 IC		06/04/2017 18:37	1	P11060427.D	CLP-2 (0.53mm) 0.53(mm)
STD005 240-281427/28 IC		06/04/2017 18:55	1	P11060428.D	CLP-1 (0.53mm) 0.53(mm)
STD005 240-281427/28 IC		06/04/2017 18:55	1	P11060428.D	CLP-2 (0.53mm) 0.53(mm)
STD01 240-281427/29 IC		06/04/2017 19:14	1	P11060429.D	CLP-1 (0.53mm) 0.53(mm)
STD01 240-281427/29 IC		06/04/2017 19:14	1	P11060429.D	CLP-2 (0.53mm) 0.53(mm)
STD02 240-281427/30 IC		06/04/2017 19:33	1	P11060430.D	CLP-1 (0.53mm) 0.53(mm)
STD02 240-281427/30 IC		06/04/2017 19:33	1	P11060430.D	CLP-2 (0.53mm) 0.53(mm)
STD05 240-281427/31 ICIS		06/04/2017 19:51	1	P11060431.D	CLP-1 (0.53mm) 0.53(mm)
STD05 240-281427/31 ICIS		06/04/2017 19:51	1	P11060431.D	CLP-2 (0.53mm) 0.53(mm)
STD1 240-281427/32 IC		06/04/2017 20:10	1	P11060432.D	CLP-1 (0.53mm) 0.53(mm)
STD1 240-281427/32 IC		06/04/2017 20:10	1	P11060432.D	CLP-2 (0.53mm) 0.53(mm)
std1.5 1660 IC		06/04/2017 20:29	1	P11060433.D	CLP-1 (0.53mm) 0.53(mm)
std1.5 1660 IC		06/04/2017 20:29	1	P11060433.D	CLP-2 (0.53mm) 0.53(mm)
ICV 240-281427/34		06/04/2017 20:47	1	P11060434.D	CLP-1 (0.53mm) 0.53(mm)
ICV 240-281427/34		06/04/2017 20:47	1	P11060434.D	CLP-2 (0.53mm) 0.53(mm)
ICV 240-281427/35		06/04/2017 21:06	1	P11060435.D	CLP-1 (0.53mm) 0.53(mm)
ICV 240-281427/35		06/04/2017 21:06	1	P11060435.D	CLP-2 (0.53mm) 0.53(mm)
ICV 240-281427/36		06/04/2017 21:24	1	P11060436.D	CLP-1 (0.53mm) 0.53(mm)
ICV 240-281427/36		06/04/2017 21:24	1	P11060436.D	CLP-2 (0.53mm) 0.53(mm)
ICV 240-281427/37		06/04/2017 21:43	1	P11060437.D	CLP-1 (0.53mm) 0.53(mm)
ICV 240-281427/37		06/04/2017 21:43	1	P11060437.D	CLP-2 (0.53mm) 0.53(mm)
ICV 240-281427/38		06/04/2017 22:02	1	P11060438.D	CLP-1 (0.53mm) 0.53(mm)

8082A

PCBS ANALYSIS RUN LOG

Lab Name: TestAmerica Canton Job No.: 240-81698-1

SDG No.:

Instrument ID: A2HP11 Start Date: 06/04/2017 11:28

Analysis Batch Number: 281427 End Date: 06/04/2017 22:58

LAB SAMPLE ID	CLIENT SAMPLE ID	DATE ANALYZED	DILUTION FACTOR	LAB FILE ID	COLUMN ID
ICV 240-281427/38		06/04/2017 22:02	1	P11060438.D	CLP-2 (0.53mm) 0.53(mm)
ICV 240-281427/39		06/04/2017 22:20	1	P11060439.D	CLP-1 (0.53mm) 0.53(mm)
ICV 240-281427/39		06/04/2017 22:20	1	P11060439.D	CLP-2 (0.53mm) 0.53(mm)
ICV 240-281427/40		06/04/2017 22:39	1	P11060440.D	CLP-1 (0.53mm) 0.53(mm)
ICV 240-281427/40		06/04/2017 22:39	1	P11060440.D	CLP-2 (0.53mm) 0.53(mm)
ICV 240-281427/41		06/04/2017 22:58	1	P11060441.D	CLP-1 (0.53mm) 0.53(mm)
ICV 240-281427/41		06/04/2017 22:58	1	P11060441.D	CLP-2 (0.53mm) 0.53(mm)

8082A

PCBS ANALYSIS RUN LOG

Lab Name: TestAmerica Canton Job No.: 240-81698-1

SDG No.:

Instrument ID: A2HP11 Start Date: 07/05/2017 09:43

Analysis Batch Number: 285854 End Date: 07/05/2017 18:46

LAB SAMPLE ID	CLIENT SAMPLE ID	DATE ANALYZED	DILUTION FACTOR	LAB FILE ID	COLUMN ID
CCV 240-285854/3 CCVIS		07/05/2017 09:43	1	P11070503.D	CLP-1 (0.53mm) 0.53(mm)
CCV 240-285854/3 CCVIS		07/05/2017 09:43	1	P11070503.D	CLP-2 (0.53mm) 0.53(mm)
CCV 240-285854/4		07/05/2017 10:01	1		CLP-1 (0.53mm) 0.53(mm)
CCV 240-285854/4		07/05/2017 10:01	1	P11070504.D	CLP-2 (0.53mm) 0.53(mm)
CCV 240-285854/6		07/05/2017 10:38	1	P11070506.D	CLP-1 (0.53mm) 0.53(mm)
CCV 240-285854/6		07/05/2017 10:38	1	P11070506.D	CLP-2 (0.53mm) 0.53(mm)
CCV 240-285854/7		07/05/2017 10:57	1		CLP-1 (0.53mm) 0.53(mm)
CCV 240-285854/7		07/05/2017 10:57	1	P11070507.D	CLP-2 (0.53mm) 0.53(mm)
CCV 240-285854/9		07/05/2017 11:34	1		CLP-1 (0.53mm) 0.53(mm)
CCV 240-285854/9		07/05/2017 11:34	1	P11070509.D	CLP-2 (0.53mm) 0.53(mm)
ZZZZZ		07/05/2017 11:54	1		CLP-1 (0.53mm) 0.53(mm)
ZZZZZ		07/05/2017 11:54	1		CLP-2 (0.53mm) 0.53(mm)
ZZZZZ		07/05/2017 12:12	1		CLP-1 (0.53mm) 0.53(mm)
ZZZZZ		07/05/2017 12:12	1		CLP-2 (0.53mm) 0.53(mm)
ZZZZZ		07/05/2017 12:31	1		CLP-1 (0.53mm) 0.53(mm)
ZZZZZ		07/05/2017 12:31	1		CLP-2 (0.53mm) 0.53(mm)
ZZZZZ		07/05/2017 12:49	2		CLP-1 (0.53mm) 0.53(mm)
ZZZZZ		07/05/2017 12:49	2		CLP-2 (0.53mm) 0.53(mm)
ZZZZZ		07/05/2017 13:45	1		CLP-1 (0.53mm) 0.53(mm)
ZZZZZ		07/05/2017 13:45	1		CLP-2 (0.53mm) 0.53(mm)
240-81698-4		07/05/2017 14:23	1	P11070518.D	CLP-1 (0.53mm) 0.53(mm)
240-81698-4		07/05/2017 14:23	1	P11070518.D	CLP-2 (0.53mm) 0.53(mm)
240-81698-6		07/05/2017 14:42	1	P11070519.D	CLP-1 (0.53mm) 0.53(mm)
240-81698-6		07/05/2017 14:42	1	P11070519.D	CLP-2 (0.53mm) 0.53(mm)
ZZZZZ		07/05/2017 15:01	1		CLP-1 (0.53mm) 0.53(mm)
ZZZZZ		07/05/2017 15:01	1		CLP-2 (0.53mm) 0.53(mm)
ZZZZZ		07/05/2017 15:20	1		CLP-1 (0.53mm) 0.53(mm)
ZZZZZ		07/05/2017 15:20	1		CLP-2 (0.53mm) 0.53(mm)
ZZZZZ		07/05/2017 15:39	1		CLP-1 (0.53mm) 0.53(mm)
ZZZZZ		07/05/2017 15:39	1		CLP-2 (0.53mm) 0.53(mm)
ZZZZZ		07/05/2017 15:58	1		CLP-1 (0.53mm) 0.53(mm)
ZZZZZ		07/05/2017 15:58	1		CLP-2 (0.53mm) 0.53(mm)
ZZZZZ		07/05/2017 16:16	1		CLP-1 (0.53mm) 0.53(mm)
ZZZZZ		07/05/2017 16:16	1		CLP-2 (0.53mm) 0.53(mm)
ZZZZZ		07/05/2017 16:35	1		CLP-1 (0.53mm) 0.53(mm)
ZZZZZ		07/05/2017 16:35	1		CLP-2 (0.53mm) 0.53(mm)
ZZZZZ		07/05/2017 16:54	1		CLP-1 (0.53mm) 0.53(mm)
ZZZZZ		07/05/2017 16:54	1		CLP-2 (0.53mm) 0.53(mm)
MB 240-285524/15-A		07/05/2017 17:13	1	P11070527.D	CLP-1 (0.53mm) 0.53(mm)
MB 240-285524/15-A		07/05/2017 17:13	1	P11070527.D	CLP-2 (0.53mm) 0.53(mm)
LCS 240-285524/16-A		07/05/2017 17:32	1	P11070528.D	CLP-1 (0.53mm) 0.53(mm)
LCS 240-285524/16-A		07/05/2017 17:32	1	P11070528.D	CLP-2 (0.53mm) 0.53(mm)
CCVIS 240-285854/29		07/05/2017 17:50	1		CLP-1 (0.53mm) 0.53(mm)
CCVIS 240-285854/29		07/05/2017 17:50	1		CLP-2 (0.53mm) 0.53(mm)

8082A

PCBS ANALYSIS RUN LOG

Lab Name: TestAmerica Canton Job No.: 240-81698-1

SDG No.:

Instrument ID: A2HP11 Start Date: 07/05/2017 09:43

Analysis Batch Number: 285854 End Date: 07/05/2017 18:46

LAB SAMPLE ID	CLIENT SAMPLE ID	DATE ANALYZED	DILUTION FACTOR	LAB FILE ID	COLUMN ID
ZZZZZ		07/05/2017 18:09	1		CLP-1 (0.53mm) 0.53(mm)
ZZZZZ		07/05/2017 18:09	1		CLP-2 (0.53mm) 0.53(mm)
ZZZZZ		07/05/2017 18:28	1		CLP-1 (0.53mm) 0.53(mm)
ZZZZZ		07/05/2017 18:28	1		CLP-2 (0.53mm) 0.53(mm)
ZZZZZ		07/05/2017 18:46	1		CLP-1 (0.53mm) 0.53(mm)
ZZZZZ		07/05/2017 18:46	1		CLP-2 (0.53mm) 0.53(mm)

8082A

PCBS ANALYSIS RUN LOG

Lab Name: TestAmerica Canton Job No.: 240-81698-1

SDG No.:

Instrument ID: A2HP4 Start Date: 07/05/2017 14:55

Analysis Batch Number: 285960 End Date: 07/06/2017 03:01

LAB SAMPLE ID	CLIENT SAMPLE ID	DATE ANALYZED	DILUTION FACTOR	LAB FILE ID	COLUMN ID
STD005 240-285960/4 IC		07/05/2017 14:55	1	P40705004.D	CLP-1 (0.53mm) 0.53(mm)
STD005 240-285960/4 IC		07/05/2017 14:55	1	P40705004.D	CLP-2 (0.53mm) 0.53(mm)
STD01 240-285960/5 IC		07/05/2017 15:15	1	P40705005.D	CLP-1 (0.53mm) 0.53(mm)
STD01 240-285960/5 IC		07/05/2017 15:15	1	P40705005.D	CLP-2 (0.53mm) 0.53(mm)
STD02 240-285960/6 IC		07/05/2017 15:35	1	P40705006.D	CLP-1 (0.53mm) 0.53(mm)
STD02 240-285960/6 IC		07/05/2017 15:35	1	P40705006.D	CLP-2 (0.53mm) 0.53(mm)
STD05 240-285960/7 IC		07/05/2017 15:54	1	P40705007.D	CLP-1 (0.53mm) 0.53(mm)
STD05 240-285960/7 IC		07/05/2017 15:54	1	P40705007.D	CLP-2 (0.53mm) 0.53(mm)
STD1 240-285960/8 IC		07/05/2017 16:13	1	P40705008.D	CLP-1 (0.53mm) 0.53(mm)
STD1 240-285960/8 IC		07/05/2017 16:13	1	P40705008.D	CLP-2 (0.53mm) 0.53(mm)
STD15 240-285960/9 IC		07/05/2017 16:33	1	P40705009.D	CLP-1 (0.53mm) 0.53(mm)
STD15 240-285960/9 IC		07/05/2017 16:33	1	P40705009.D	CLP-2 (0.53mm) 0.53(mm)
STD005 240-285960/10 IC		07/05/2017 16:52	1	P40705010.D	CLP-1 (0.53mm) 0.53(mm)
STD005 240-285960/10 IC		07/05/2017 16:52	1	P40705010.D	CLP-2 (0.53mm) 0.53(mm)
STD01 240-285960/11 IC		07/05/2017 17:12	1	P40705011.D	CLP-1 (0.53mm) 0.53(mm)
STD01 240-285960/11 IC		07/05/2017 17:12	1	P40705011.D	CLP-2 (0.53mm) 0.53(mm)
STD02 240-285960/12 IC		07/05/2017 17:31	1	P40705012.D	CLP-1 (0.53mm) 0.53(mm)
STD02 240-285960/12 IC		07/05/2017 17:31	1	P40705012.D	CLP-2 (0.53mm) 0.53(mm)
STD05 240-285960/13 IC		07/05/2017 17:50	1	P40705013.D	CLP-1 (0.53mm) 0.53(mm)
STD05 240-285960/13 IC		07/05/2017 17:50	1	P40705013.D	CLP-2 (0.53mm) 0.53(mm)
STD1 240-285960/14 IC		07/05/2017 18:09	1	P40705014.D	CLP-1 (0.53mm) 0.53(mm)
STD1 240-285960/14 IC		07/05/2017 18:09	1	P40705014.D	CLP-2 (0.53mm) 0.53(mm)
STD15 240-285960/15 IC		07/05/2017 18:29	1	P40705015.D	CLP-1 (0.53mm) 0.53(mm)
STD15 240-285960/15 IC		07/05/2017 18:29	1	P40705015.D	CLP-2 (0.53mm) 0.53(mm)
STD005 240-285960/16 IC		07/05/2017 18:49	1	P40705016.D	CLP-1 (0.53mm) 0.53(mm)
STD005 240-285960/16 IC		07/05/2017 18:49	1	P40705016.D	CLP-2 (0.53mm) 0.53(mm)
STD01 240-285960/17 IC		07/05/2017 19:08	1	P40705017.D	CLP-1 (0.53mm) 0.53(mm)
STD01 240-285960/17 IC		07/05/2017 19:08	1	P40705017.D	CLP-2 (0.53mm) 0.53(mm)
STD02 240-285960/18 IC		07/05/2017 19:28	1	P40705018.D	CLP-1 (0.53mm) 0.53(mm)
STD02 240-285960/18 IC		07/05/2017 19:28	1	P40705018.D	CLP-2 (0.53mm) 0.53(mm)
STD05 240-285960/19 IC		07/05/2017 19:48	1	P40705019.D	CLP-1 (0.53mm) 0.53(mm)
STD05 240-285960/19 IC		07/05/2017 19:48	1	P40705019.D	CLP-2 (0.53mm) 0.53(mm)

8082A

PCBS ANALYSIS RUN LOG

Lab Name: TestAmerica Canton Job No.: 240-81698-1

SDG No.:

Instrument ID: A2HP4 Start Date: 07/05/2017 14:55

Analysis Batch Number: 285960 End Date: 07/06/2017 03:01

LAB SAMPLE ID	CLIENT SAMPLE ID	DATE ANALYZED	DILUTION FACTOR	LAB FILE ID	COLUMN ID
STD1 240-285960/20 IC		07/05/2017 20:08	1	P40705020.D	CLP-1 (0.53mm) 0.53(mm)
STD1 240-285960/20 IC		07/05/2017 20:08	1	P40705020.D	CLP-2 (0.53mm) 0.53(mm)
STD15 240-285960/21 IC		07/05/2017 20:28	1	P40705021.D	CLP-1 (0.53mm) 0.53(mm)
STD15 240-285960/21 IC		07/05/2017 20:28	1	P40705021.D	CLP-2 (0.53mm) 0.53(mm)
STD005 240-285960/22 IC		07/05/2017 20:47	1	P40705022.D	CLP-1 (0.53mm) 0.53(mm)
STD005 240-285960/22 IC		07/05/2017 20:47	1	P40705022.D	CLP-2 (0.53mm) 0.53(mm)
STD01 240-285960/23 IC		07/05/2017 21:07	1	P40705023.D	CLP-1 (0.53mm) 0.53(mm)
STD01 240-285960/23 IC		07/05/2017 21:07	1	P40705023.D	CLP-2 (0.53mm) 0.53(mm)
STD02 240-285960/24 IC		07/05/2017 21:27	1	P40705024.D	CLP-1 (0.53mm) 0.53(mm)
STD02 240-285960/24 IC		07/05/2017 21:27	1	P40705024.D	CLP-2 (0.53mm) 0.53(mm)
STD05 240-285960/25 IC		07/05/2017 21:47	1	P40705025.D	CLP-1 (0.53mm) 0.53(mm)
STD05 240-285960/25 IC		07/05/2017 21:47	1	P40705025.D	CLP-2 (0.53mm) 0.53(mm)
STD1 240-285960/26 IC		07/05/2017 22:06	1	P40705026.D	CLP-1 (0.53mm) 0.53(mm)
STD1 240-285960/26 IC		07/05/2017 22:06	1	P40705026.D	CLP-2 (0.53mm) 0.53(mm)
STD15 240-285960/27 IC		07/05/2017 22:26	1	P40705027.D	CLP-1 (0.53mm) 0.53(mm)
STD15 240-285960/27 IC		07/05/2017 22:26	1	P40705027.D	CLP-2 (0.53mm) 0.53(mm)
STD005 240-285960/28 IC		07/05/2017 22:46	1	P40705028.D	CLP-1 (0.53mm) 0.53(mm)
STD005 240-285960/28 IC		07/05/2017 22:46	1	P40705028.D	CLP-2 (0.53mm) 0.53(mm)
STD01 240-285960/29 IC		07/05/2017 23:06	1	P40705029.D	CLP-1 (0.53mm) 0.53(mm)
STD01 240-285960/29 IC		07/05/2017 23:06	1	P40705029.D	CLP-2 (0.53mm) 0.53(mm)
STD02 240-285960/30 IC		07/05/2017 23:25	1	P40705030.D	CLP-1 (0.53mm) 0.53(mm)
STD02 240-285960/30 IC		07/05/2017 23:25	1	P40705030.D	CLP-2 (0.53mm) 0.53(mm)
STD05 240-285960/31 ICIS		07/05/2017 23:45	1	P40705031.D	CLP-1 (0.53mm) 0.53(mm)
STD05 240-285960/31 ICIS		07/05/2017 23:45	1	P40705031.D	CLP-2 (0.53mm) 0.53(mm)
STD1 240-285960/32 IC		07/06/2017 00:04	1	P40705032.D	CLP-1 (0.53mm) 0.53(mm)
STD1 240-285960/32 IC		07/06/2017 00:04	1	P40705032.D	CLP-2 (0.53mm) 0.53(mm)
STD15 240-285960/33 IC		07/06/2017 00:24	1	P40705033.D	CLP-1 (0.53mm) 0.53(mm)
STD15 240-285960/33 IC		07/06/2017 00:24	1	P40705033.D	CLP-2 (0.53mm) 0.53(mm)
ICV 240-285960/34		07/06/2017 00:43	1	P40705034.D	CLP-1 (0.53mm) 0.53(mm)
ICV 240-285960/34		07/06/2017 00:43	1	P40705034.D	CLP-2 (0.53mm) 0.53(mm)
ICV 240-285960/35		07/06/2017 01:03	1	P40705035.D	CLP-1 (0.53mm) 0.53(mm)
ICV 240-285960/35		07/06/2017 01:03	1	P40705035.D	CLP-2 (0.53mm) 0.53(mm)
ICV 240-285960/36		07/06/2017 01:23	1	P40705036.D	CLP-1 (0.53mm) 0.53(mm)

8082A

PCBS ANALYSIS RUN LOG

Lab Name: TestAmerica Canton Job No.: 240-81698-1

SDG No.:

Instrument ID: A2HP4 Start Date: 07/05/2017 14:55

Analysis Batch Number: 285960 End Date: 07/06/2017 03:01

LAB SAMPLE ID	CLIENT SAMPLE ID	DATE ANALYZED	DILUTION FACTOR	LAB FILE ID	COLUMN ID
ICV 240-285960/36		07/06/2017 01:23	1	P40705036.D	CLP-2 (0.53mm) 0.53(mm)
ICV 240-285960/37		07/06/2017 01:43	1	P40705037.D	CLP-1 (0.53mm) 0.53(mm)
ICV 240-285960/37		07/06/2017 01:43	1	P40705037.D	CLP-2 (0.53mm) 0.53(mm)
ICV 240-285960/38		07/06/2017 02:02	1	P40705038.D	CLP-1 (0.53mm) 0.53(mm)
ICV 240-285960/38		07/06/2017 02:02	1	P40705038.D	CLP-2 (0.53mm) 0.53(mm)
ICV 240-285960/39		07/06/2017 02:22	1	P40705039.D	CLP-1 (0.53mm) 0.53(mm)
ICV 240-285960/39		07/06/2017 02:22	1	P40705039.D	CLP-2 (0.53mm) 0.53(mm)
ICV 240-285960/40		07/06/2017 02:41	1	P40705040.D	CLP-1 (0.53mm) 0.53(mm)
ICV 240-285960/40		07/06/2017 02:41	1	P40705040.D	CLP-2 (0.53mm) 0.53(mm)
ICV 240-285960/41		07/06/2017 03:01	1	P40705041.D	CLP-1 (0.53mm) 0.53(mm)
ICV 240-285960/41		07/06/2017 03:01	1	P40705041.D	CLP-2 (0.53mm) 0.53(mm)

8082A

PCBS ANALYSIS RUN LOG

Lab Name: TestAmerica Canton Job No.: 240-81698-1

SDG No.:

Instrument ID: A2HP4 Start Date: 07/07/2017 05:24

Analysis Batch Number: 286194 End Date: 07/07/2017 13:37

LAB SAMPLE ID	CLIENT SAMPLE ID	DATE ANALYZED	DILUTION FACTOR	LAB FILE ID	COLUMN ID
CCV 240-286194/3 CCVIS		07/07/2017 05:24	1	P40707003.D	CLP-1 (0.53mm) 0.53(mm)
CCV 240-286194/3 CCVIS		07/07/2017 05:24	1		CLP-2 (0.53mm) 0.53(mm)
CCV 240-286194/4		07/07/2017 05:43	1	P40707004.D	CLP-1 (0.53mm) 0.53(mm)
CCV 240-286194/4		07/07/2017 05:43	1		CLP-2 (0.53mm) 0.53(mm)
CCV 240-286194/5		07/07/2017 06:03	1	P40707005.D	CLP-1 (0.53mm) 0.53(mm)
CCV 240-286194/5		07/07/2017 06:03	1		CLP-2 (0.53mm) 0.53(mm)
CCV 240-286194/6		07/07/2017 06:23	1	P40707006.D	CLP-1 (0.53mm) 0.53(mm)
CCV 240-286194/6		07/07/2017 06:23	1		CLP-2 (0.53mm) 0.53(mm)
CCV 240-286194/7		07/07/2017 06:42	1	P40707007.D	CLP-1 (0.53mm) 0.53(mm)
CCV 240-286194/7		07/07/2017 06:42	1		CLP-2 (0.53mm) 0.53(mm)
240-81698-3		07/07/2017 07:22	1	P40707009.D	CLP-1 (0.53mm) 0.53(mm)
240-81698-3		07/07/2017 07:22	1	P40707009.D	CLP-2 (0.53mm) 0.53(mm)
240-81698-5		07/07/2017 07:42	1	P40707010.D	CLP-1 (0.53mm) 0.53(mm)
240-81698-5		07/07/2017 07:42	1	P40707010.D	CLP-2 (0.53mm) 0.53(mm)
240-81698-5 MS		07/07/2017 08:01	1	P40707011.D	CLP-1 (0.53mm) 0.53(mm)
240-81698-5 MS		07/07/2017 08:01	1	P40707011.D	CLP-2 (0.53mm) 0.53(mm)
240-81698-5 MSD		07/07/2017 08:21	1	P40707012.D	CLP-1 (0.53mm) 0.53(mm)
240-81698-5 MSD		07/07/2017 08:21	1	P40707012.D	CLP-2 (0.53mm) 0.53(mm)
ZZZZZ		07/07/2017 08:40	10		CLP-1 (0.53mm) 0.53(mm)
ZZZZZ		07/07/2017 08:40	10		CLP-2 (0.53mm) 0.53(mm)
ZZZZZ		07/07/2017 09:00	10		CLP-1 (0.53mm) 0.53(mm)
ZZZZZ		07/07/2017 09:00	10		CLP-2 (0.53mm) 0.53(mm)
ZZZZZ		07/07/2017 09:20	5		CLP-1 (0.53mm) 0.53(mm)
ZZZZZ		07/07/2017 09:20	5		CLP-2 (0.53mm) 0.53(mm)
ZZZZZ		07/07/2017 09:40	5		CLP-1 (0.53mm) 0.53(mm)
ZZZZZ		07/07/2017 09:40	5		CLP-2 (0.53mm) 0.53(mm)
ZZZZZ		07/07/2017 10:00	5		CLP-1 (0.53mm) 0.53(mm)
ZZZZZ		07/07/2017 10:00	5		CLP-2 (0.53mm) 0.53(mm)
ZZZZZ		07/07/2017 10:20	5		CLP-1 (0.53mm) 0.53(mm)
ZZZZZ		07/07/2017 10:20	5		CLP-2 (0.53mm) 0.53(mm)
ZZZZZ		07/07/2017 10:39	1		CLP-1 (0.53mm) 0.53(mm)
ZZZZZ		07/07/2017 10:39	1		CLP-2 (0.53mm) 0.53(mm)
ZZZZZ		07/07/2017 10:58	1		CLP-1 (0.53mm) 0.53(mm)
ZZZZZ		07/07/2017 10:58	1		CLP-2 (0.53mm) 0.53(mm)
ZZZZZ		07/07/2017 11:18	1		CLP-1 (0.53mm) 0.53(mm)
ZZZZZ		07/07/2017 11:18	1		CLP-2 (0.53mm) 0.53(mm)
ZZZZZ		07/07/2017 11:38	1		CLP-1 (0.53mm) 0.53(mm)
ZZZZZ		07/07/2017 11:38	1		CLP-2 (0.53mm) 0.53(mm)
ZZZZZ		07/07/2017 11:58	1		CLP-1 (0.53mm) 0.53(mm)
ZZZZZ		07/07/2017 11:58	1		CLP-2 (0.53mm) 0.53(mm)
ZZZZZ		07/07/2017 12:18	1		CLP-1 (0.53mm) 0.53(mm)
ZZZZZ		07/07/2017 12:18	1		CLP-2 (0.53mm) 0.53(mm)
MB 240-285979/22-A		07/07/2017 13:18	1	P40707027.D	CLP-1 (0.53mm) 0.53(mm)
MB 240-285979/22-A		07/07/2017 13:18	1	P40707027.D	CLP-2 (0.53mm) 0.53(mm)

8082A

PCBS ANALYSIS RUN LOG

Lab Name: TestAmerica Canton Job No.: 240-81698-1

SDG No.:

Instrument ID: A2HP4 Start Date: 07/07/2017 05:24

Analysis Batch Number: 286194 End Date: 07/07/2017 13:37

LAB SAMPLE ID	CLIENT SAMPLE ID	DATE ANALYZED	DILUTION FACTOR	LAB FILE ID	COLUMN ID
LCS 240-285979/23-A		07/07/2017 13:37	1	P40707028.D	CLP-1 (0.53mm) 0.53(mm)
LCS 240-285979/23-A		07/07/2017 13:37	1	P40707028.D	CLP-2 (0.53mm) 0.53(mm)

8082A

PCBS BATCH WORKSHEET

Lab Name: TestAmerica Canton Job No.: 240-81698-1

SDG No.:

Batch Number: 285524 Batch Start Date: 06/30/17 13:25 Batch Analyst: Scott, Caitlin

Batch Method: 3520C Batch End Date: 07/01/17 13:25

Lab Sample ID	Client Sample ID	Method Chain	Basis	InitialAmount	FinalAmount	ReceivedpH	ex10PPMSPK 00027	ex2/.2SURRW 00086	
240-81698-F-4	WC-FDCON-062817	3520C, 8082A	T	1040 mL	2 mL	7		1 mL	
240-81698-H-6	WC-WGEO-062817	3520C, 8082A	T	1020 mL	2 mL	7		1 mL	
MB 240-285524/15		3520C, 8082A		1000 mL	2 mL	7		1 mL	
LCS 240-285524/16		3520C, 8082A		1000 mL	2 mL	7	0.25 mL	1 mL	

Batch Notes	
Acid used for Clean Up ID	2902650
Exchange Solvent ID	2959695
pH Paper ID	2644945
Prep Solvent ID	3129425
TCLP Fluid 1 ID	2308568

Basis	Basis Description
T	Total/NA

The pound sign (#) in the amount added field denotes that the reagent was used undiluted. All calculations are performed using the stated concentration for this reagent.

PCBS BATCH WORKSHEET

Lab Name: TestAmerica Canton Job No.: 240-81698-1

SDG No.:

Batch Number: 285979 Batch Start Date: 07/05/17 14:20 Batch Analyst: Turner, Dakota

Batch Method: 3540C Batch End Date: 07/06/17 06:20

Lab Sample ID	Client Sample ID	Method Chain	Basis	InitialAmount	FinalAmount	ex10PPMSPK 00027	ex2/.2SURRW 00086		
240-81698-C-3	WC-FSOIL-062817	3540C, 8082A	T	10.16 g	10 mL		1 mL		
240-81698-C-5	WC-SGEO-062817	3540C, 8082A	T	9.94 g	10 mL		1 mL		
240-81698-C-5 MS	WC-SGEO-062817	3540C, 8082A	T	9.94 g	10 mL	1 mL	1 mL		
240-81698-C-5 MSD	WC-SGEO-062817	3540C, 8082A	T	10.15 g	10 mL	1 mL	1 mL		
MB 240-285979/22		3540C, 8082A		10 g	10 mL		1 mL		
LCS 240-285979/23		3540C, 8082A		10 g	10 mL	1 mL	1 mL		

Batch Notes	
Acid used for Clean Up ID	2902653
Balance ID	1339907
Na2SO4 ID	2548159
Prep Solvent ID	3127555

Basis	Basis Description
T	Total/NA

The pound sign (#) in the amount added field denotes that the reagent was used undiluted. All calculations are performed using the stated concentration for this reagent.

METALS

COVER PAGE
METALS

Lab Name: TestAmerica Canton Job Number: 240-81698-1

SDG No.:

Project: MRC Waste Characterization

Client Sample ID	Lab Sample ID
WC-FSOIL-062817	240-81698-3
WC-FDCON-062817	240-81698-4
WC-SGEO-062817	240-81698-5
WC-WGEO-062817	240-81698-6

Comments:

1A-IN
INORGANIC ANALYSIS DATA SHEET
METALS - TCLP

Client Sample ID: WC-FSOIL-062817 Lab Sample ID: 240-81698-3

Lab Name: TestAmerica Canton Job No.: 240-81698-1

SDG ID.:

Matrix: Solid Date Sampled: 06/28/2017 08:40

Reporting Basis: WET Date Received: 06/29/2017 09:20

CAS No.	Analyte	Result	RL	MDL	Units	C	Q	DIL	Method
7440-38-2	Arsenic	0.0050	0.050	0.0033	mg/L	J	B	1	6010B
7440-39-3	Barium	0.33	0.50	0.0024	mg/L	J	B	1	6010B
7440-43-9	Cadmium	0.00029	0.050	0.00029	mg/L	U		1	6010B
7440-47-3	Chromium	0.0029	0.050	0.00055	mg/L	J	B	1	6010B
7439-92-1	Lead	0.0019	0.050	0.0019	mg/L	U		1	6010B
7782-49-2	Selenium	0.0067	0.050	0.0051	mg/L	J	B	1	6010B
7440-22-4	Silver	0.00092	0.050	0.00092	mg/L	U		1	6010B
7439-97-6	Mercury	0.00013	0.0020	0.00013	mg/L	U		1	7470A

1A-IN
INORGANIC ANALYSIS DATA SHEET
METALS - TCLP

Client Sample ID: WC-FDCON-062817

Lab Sample ID: 240-81698-4

Lab Name: TestAmerica Canton

Job No.: 240-81698-1

SDG ID.:

Matrix: Water

Date Sampled: 06/28/2017 08:55

Reporting Basis: WET

Date Received: 06/29/2017 09:20

CAS No.	Analyte	Result	RL	MDL	Units	C	Q	DIL	Method
7440-38-2	Arsenic	0.0033	0.050	0.0033	mg/L	U		1	6010B
7440-39-3	Barium	0.10	0.50	0.0024	mg/L	J	B	1	6010B
7440-43-9	Cadmium	0.00029	0.050	0.00029	mg/L	U		1	6010B
7440-47-3	Chromium	0.0016	0.050	0.00055	mg/L	J	B	1	6010B
7439-92-1	Lead	0.0019	0.050	0.0019	mg/L	U		1	6010B
7782-49-2	Selenium	0.0051	0.050	0.0051	mg/L	U		1	6010B
7440-22-4	Silver	0.00092	0.050	0.00092	mg/L	U		1	6010B
7439-97-6	Mercury	0.00013	0.0020	0.00013	mg/L	U		1	7470A

1A-IN
INORGANIC ANALYSIS DATA SHEET
METALS - TCLP

Client Sample ID: WC-SGEO-062817
Lab Sample ID: 240-81698-5
Lab Name: TestAmerica Canton
Job No.: 240-81698-1
SDG ID.:
Matrix: Solid
Date Sampled: 06/28/2017 08:15
Reporting Basis: WET
Date Received: 06/29/2017 09:20

CAS No.	Analyte	Result	RL	MDL	Units	C	Q	DIL	Method
7440-38-2	Arsenic	0.0052	0.050	0.0033	mg/L	J	B	1	6010B
7440-39-3	Barium	0.61	0.50	0.0024	mg/L		B	1	6010B
7440-43-9	Cadmium	0.0014	0.050	0.00029	mg/L	J		1	6010B
7440-47-3	Chromium	0.0051	0.050	0.00055	mg/L	J	B	1	6010B
7439-92-1	Lead	0.0056	0.050	0.0019	mg/L	J		1	6010B
7782-49-2	Selenium	0.0073	0.050	0.0051	mg/L	J	B	1	6010B
7440-22-4	Silver	0.00092	0.050	0.00092	mg/L	U		1	6010B
7439-97-6	Mercury	0.00013	0.0020	0.00013	mg/L	U		1	7470A

1A-IN
INORGANIC ANALYSIS DATA SHEET
METALS - TCLP

Client Sample ID: WC-WGEO-062817

Lab Sample ID: 240-81698-6

Lab Name: TestAmerica Canton

Job No.: 240-81698-1

SDG ID.:

Matrix: Water

Date Sampled: 06/28/2017 08:25

Reporting Basis: WET

Date Received: 06/29/2017 09:20

CAS No.	Analyte	Result	RL	MDL	Units	C	Q	DIL	Method
7440-38-2	Arsenic	0.0033	0.050	0.0033	mg/L	U		1	6010B
7440-39-3	Barium	0.14	0.50	0.0024	mg/L	J	B	1	6010B
7440-43-9	Cadmium	0.00029	0.050	0.00029	mg/L	U		1	6010B
7440-47-3	Chromium	0.056	0.050	0.00055	mg/L		B	1	6010B
7439-92-1	Lead	0.0019	0.050	0.0019	mg/L	U		1	6010B
7782-49-2	Selenium	0.0052	0.050	0.0051	mg/L	J		1	6010B
7440-22-4	Silver	0.00092	0.050	0.00092	mg/L	U		1	6010B
7439-97-6	Mercury	0.00013	0.0020	0.00013	mg/L	U		1	7470A

2A-IN
CALIBRATION VERIFICATIONS
METALS

Lab Name: TestAmerica Canton Job No.: 240-81698-1

SDG No.:

ICV Source: MT6500ICV_00038 Concentration Units: ug/L

CCV Source: MTICPCCV_00103

Analyte	ICV 240-286324/4 07/07/2017 07:47				CCV 240-286324/42 07/07/2017 10:40				CCV 240-286324/54 07/07/2017 11:34			
	Found	C	True	%R	Found	C	True	%R	Found	C	True	%R
Arsenic	386		375	103	496		500	99	496		500	99
Barium	1500		1500	100	1990		2000	100	2000		2000	100
Cadmium	378		375	101	487		500	97	484		500	97
Chromium	1510		1500	101	1930		2000	97	1970		2000	99
Lead	372		375	99	486		500	97	489		500	98
Selenium	379		375	101	493		500	99	496		500	99
Silver	748		750	100	942		1000	94	961		1000	96

Note! Calculations are performed before rounding to avoid round-off errors in calculated results.
Italicized analytes were not requested for this sequence.

2A-IN
CALIBRATION VERIFICATIONS
METALS

Lab Name: TestAmerica Canton Job No.: 240-81698-1

SDG No.:

ICV Source: MT6500ICV_00038 Concentration Units: ug/L

CCV Source: MTICPCCV_00103

Analyte	CCV 240-286324/83 07/07/2017 13:52				CCV 240-286324/95 07/07/2017 14:47							
	Found	C	True	%R	Found	C	True	%R	Found	C	True	%R
Arsenic	491		500	98	493		500	99				
Barium	1990		2000	100	1980		2000	99				
Cadmium	473		500	95	479		500	96				
Chromium	1970		2000	99	1980		2000	99				
Lead	482		500	96	488		500	98				
Selenium	486		500	97	493		500	99				
Silver	952		1000	95	966		1000	97				

Note! Calculations are performed before rounding to avoid round-off errors in calculated results.
Italicized analytes were not requested for this sequence.

2A-IN
CALIBRATION VERIFICATIONS
METALS

Lab Name: TestAmerica Canton Job No.: 240-81698-1

SDG No.:

ICV Source: MTTRCRIC_00048 Concentration Units: ug/L

CCV Source: MTICPCCV_00103

Analyte	ICVL 240-286324/6 07/07/2017 07:56				CCV 240-286324/42 07/07/2017 10:40				CCV 240-286324/54 07/07/2017 11:34			
	Found	C	True	%R	Found	C	True	%R	Found	C	True	%R
Arsenic	13.7		15.0	91	496		500	99	496		500	99
Barium	200		200	100	1990		2000	100	2000		2000	100
Cadmium	4.98		5.00	100	487		500	97	484		500	97
Chromium	10.3		10.0	103	1930		2000	97	1970		2000	99
Lead	11.0		10.0	110	486		500	97	489		500	98
Selenium	18.4		20.0	92	493		500	99	496		500	99
Silver	9.42		10.0	94	942		1000	94	961		1000	96

Note! Calculations are performed before rounding to avoid round-off errors in calculated results.
Italicized analytes were not requested for this sequence.

2A-IN
CALIBRATION VERIFICATIONS
METALS

Lab Name: TestAmerica Canton Job No.: 240-81698-1

SDG No.:

ICV Source: MTTRCRIC_00048 Concentration Units: ug/L

CCV Source: MTICPCCV_00103

Analyte	CCV 240-286324/83 07/07/2017 13:52				CCV 240-286324/95 07/07/2017 14:47							
	Found	C	True	%R	Found	C	True	%R	Found	C	True	%R
Arsenic	491		500	98	493		500	99				
Barium	1990		2000	100	1980		2000	99				
Cadmium	473		500	95	479		500	96				
Chromium	1970		2000	99	1980		2000	99				
Lead	482		500	96	488		500	98				
Selenium	486		500	97	493		500	99				
Silver	952		1000	95	966		1000	97				

Note! Calculations are performed before rounding to avoid round-off errors in calculated results.
Italicized analytes were not requested for this sequence.

2A-IN
CALIBRATION VERIFICATIONS
METALS

Lab Name: TestAmerica Canton Job No.: 240-81698-1

SDG No.:

ICV Source: MT6500ICV_00038 Concentration Units: ug/L

CCV Source: MTICPCCV_00104

Analyte	ICV 240-286626/4 07/10/2017 12:44				CCV 240-286626/138 07/10/2017 22:28				CCV 240-286626/150 07/10/2017 23:20			
	Found	C	True	%R	Found	C	True	%R	Found	C	True	%R
Arsenic	383		375	102	503		500	101	506		500	101
Barium	1460		1500	97	1970		2000	99	1950		2000	98
Cadmium	371		375	99	501		500	100	501		500	100
Chromium	1460		1500	98	1900		2000	95	1900		2000	95
Lead	369		375	98	479		500	96	479		500	96
Selenium	374		375	100	504		500	101	504		500	101
Silver	736		750	98	993		1000	99	987		1000	99

Note! Calculations are performed before rounding to avoid round-off errors in calculated results.
Italicized analytes were not requested for this sequence.

2A-IN
CALIBRATION VERIFICATIONS
METALS

Lab Name: TestAmerica Canton Job No.: 240-81698-1

SDG No.:

ICV Source: MT6500ICV_00038 Concentration Units: ug/L

CCV Source: MTICPCCV_00104

Analyte	CCV 240-286626/162 07/11/2017 00:14				CCV 240-286626/174 07/11/2017 01:06							
	Found	C	True	%R	Found	C	True	%R	Found	C	True	%R
Arsenic	495		500	99	502		500	100				
Barium	1950		2000	98	1980		2000	99				
Cadmium	492		500	98	499		500	100				
Chromium	1880		2000	94	1900		2000	95				
Lead	471		500	94	476		500	95				
Selenium	495		500	99	502		500	100				
Silver	979		1000	98	989		1000	99				

Note! Calculations are performed before rounding to avoid round-off errors in calculated results.
Italicized analytes were not requested for this sequence.

2A-IN
CALIBRATION VERIFICATIONS
METALS

Lab Name: TestAmerica Canton Job No.: 240-81698-1

SDG No.:

ICV Source: MTTRCRIC_00048 Concentration Units: ug/L

CCV Source: MTICPCCV_00104

Analyte	ICVL 240-286626/6 07/10/2017 12:52				CCV 240-286626/138 07/10/2017 22:28				CCV 240-286626/150 07/10/2017 23:20			
	Found	C	True	%R	Found	C	True	%R	Found	C	True	%R
Arsenic	15.1		15.0	100	503		500	101	506		500	101
Barium	192	J	200	96	1970		2000	99	1950		2000	98
Cadmium	5.05		5.00	101	501		500	100	501		500	100
Chromium	9.50		10.0	95	1900		2000	95	1900		2000	95
Lead	11.0		10.0	110	479		500	96	479		500	96
Selenium	17.8		20.0	89	504		500	101	504		500	101
Silver	9.85		10.0	99	993		1000	99	987		1000	99

Note! Calculations are performed before rounding to avoid round-off errors in calculated results.
Italicized analytes were not requested for this sequence.

2A-IN
CALIBRATION VERIFICATIONS
METALS

Lab Name: TestAmerica Canton Job No.: 240-81698-1

SDG No.:

ICV Source: MTTRCRIC_00048 Concentration Units: ug/L

CCV Source: MTICPCCV_00104

Analyte	CCV 240-286626/162 07/11/2017 00:14				CCV 240-286626/174 07/11/2017 01:06							
	Found	C	True	%R	Found	C	True	%R	Found	C	True	%R
Arsenic	495		500	99	502		500	100				
Barium	1950		2000	98	1980		2000	99				
Cadmium	492		500	98	499		500	100				
Chromium	1880		2000	94	1900		2000	95				
Lead	471		500	94	476		500	95				
Selenium	495		500	99	502		500	100				
Silver	979		1000	98	989		1000	99				

Note! Calculations are performed before rounding to avoid round-off errors in calculated results.
Italicized analytes were not requested for this sequence.

2A-IN
CALIBRATION VERIFICATIONS
METALS

Lab Name: TestAmerica Canton Job No.: 240-81698-1

SDG No.:

ICV Source: MTHgICV_00001_00197 Concentration Units: ug/L

CCV Source: MTHGCALW_01550

Analyte	ICV 240-286239/7-A 07/07/2017 12:03				CCV 240-286239/10-A 07/07/2017 12:09				CCV 240-286239/10-A 07/07/2017 12:28			
	Found	C	True	%R	Found	C	True	%R	Found	C	True	%R
Mercury	5.11		5.00	102	5.30		5.00	106	5.22		5.00	104

Note! Calculations are performed before rounding to avoid round-off errors in calculated results.
Italicized analytes were not requested for this sequence.

2A-IN
CALIBRATION VERIFICATIONS
METALS

Lab Name: TestAmerica Canton Job No.: 240-81698-1

SDG No.:

ICV Source: MTHgICV_00001_00197 Concentration Units: ug/L

CCV Source: MTHGCALW_01550

Analyte	CCV 240-286239/10-A 07/07/2017 13:31				CCV 240-286239/10-A 07/07/2017 13:53							
	Found	C	True	%R	Found	C	True	%R	Found	C	True	%R
Mercury	5.36		5.00	107	5.42		5.00	108				

Note! Calculations are performed before rounding to avoid round-off errors in calculated results.
Italicized analytes were not requested for this sequence.

2A-IN
CALIBRATION VERIFICATIONS
METALS

Lab Name: TestAmerica Canton Job No.: 240-81698-1

SDG No.:

ICV Source: MTHgICV_00001_00198 Concentration Units: ug/L

CCV Source: MTHGCALW_01551

Analyte	ICV 240-286457/7-A 07/10/2017 11:46				CCV 240-286457/10-A 07/10/2017 12:42				CCV 240-286457/10-A 07/10/2017 13:08			
	Found	C	True	%R	Found	C	True	%R	Found	C	True	%R
Mercury	4.97		5.00	99	5.02		5.00	100	5.10		5.00	102

Note! Calculations are performed before rounding to avoid round-off errors in calculated results.
Italicized analytes were not requested for this sequence.

2A-IN
CALIBRATION VERIFICATIONS
METALS

Lab Name: TestAmerica Canton Job No.: 240-81698-1

SDG No.:

ICV Source: MTHgICV_00001_00198 Concentration Units: ug/L

CCV Source: MTHGCALW_01551

Analyte	CCV 240-286457/10-A 07/10/2017 13:32											
	Found	C	True	%R	Found	C	True	%R	Found	C	True	%R
Mercury	5.07		5.00	101								

Note! Calculations are performed before rounding to avoid round-off errors in calculated results.
Italicized analytes were not requested for this sequence.

2B-IN
CRQL CHECK STANDARD
METALS

Lab Name: TestAmerica Canton Job No.: 240-81698-1

SDG No.:

Method: 7470A Instrument ID: H3

Lab Sample ID: CRA 240-286239/9-A Concentration Units: ug/L

CRQL Check Standard Source: MTHGCALW_01550

Analyte	CRQL Check Standard				
	True	Found	Qualifiers	%R(1)	Limits
Mercury	0.200	0.284	J	142	50-150

Lab Sample ID: CRA 240-286457/9-A Concentration Units: ug/L

CRQL Check Standard Source: MTHGCALW_01551

Analyte	CRQL Check Standard				
	True	Found	Qualifiers	%R(1)	Limits
Mercury	0.200	0.227	J	114	50-150

Note! Calculations are performed before rounding to avoid round-off errors in calculated results.

FORM IIB-IN

3-IN
INSTRUMENT BLANKS
METALS

Lab Name: TestAmerica Canton Job No.: 240-81698-1

SDG No.:

Concentration Units: ug/L

Analyte	RL	ICB 240-286324/5 07/07/2017 07:51		CCB 240-286324/43 07/07/2017 10:44		CCB 240-286324/55 07/07/2017 11:38		CCB 240-286324/84 07/07/2017 13:56	
		Found	C	Found	C	Found	C	Found	C
Arsenic	10	3.3	U	3.3	U	3.3	U	3.3	U
Barium	200	2.4	U	2.4	U	2.4	U	2.4	U
Cadmium	2.0	0.29	U	0.29	U	0.29	U	0.29	U
Chromium	5.0	0.602	J	0.55	U	0.55	U	0.55	U
Lead	5.0	1.9	U	1.9	U	1.9	U	1.9	U
Selenium	15	5.1	U	5.1	U	5.1	U	5.1	U
Silver	5.0	0.92	U	0.92	U	0.92	U	0.92	U

Italicized analytes were not requested for this sequence.

3-IN
INSTRUMENT BLANKS
METALS

Lab Name: TestAmerica Canton Job No.: 240-81698-1

SDG No.:

Concentration Units: ug/L

Analyte	RL	CCB 240-286324/96 07/07/2017 14:51							
		Found	C	Found	C	Found	C	Found	C
Arsenic	10	3.3	U						
Barium	200	2.4	U						
Cadmium	2.0	0.29	U						
Chromium	5.0	0.55	U						
Lead	5.0	1.9	U						
Selenium	15	5.1	U						
Silver	5.0	0.92	U						

Italicized analytes were not requested for this sequence.

3-IN
INSTRUMENT BLANKS
METALS

Lab Name: TestAmerica Canton Job No.: 240-81698-1

SDG No.:

Concentration Units: ug/L

Analyte	RL	ICB 240-286626/5 07/10/2017 12:48		CCB 240-286626/139 07/10/2017 22:32		CCB 240-286626/151 07/10/2017 23:24		CCB 240-286626/163 07/11/2017 00:18	
		Found	C	Found	C	Found	C	Found	C
Arsenic	10	3.3	U	3.3	U	3.3	U	3.3	U
Barium	200	2.4	U	2.4	U	2.4	U	2.4	U
Cadmium	2.0	0.29	U	0.29	U	0.29	U	0.29	U
Chromium	5.0	0.55	U	0.55	U	0.55	U	0.55	U
Lead	5.0	1.9	U	1.9	U	1.9	U	1.9	U
Selenium	15	5.1	U	5.1	U	5.1	U	5.1	U
Silver	5.0	0.92	U	0.92	U	0.92	U	0.92	U

Italicized analytes were not requested for this sequence.

3-IN
INSTRUMENT BLANKS
METALS

Lab Name: TestAmerica Canton Job No.: 240-81698-1

SDG No.:

Concentration Units: ug/L

Analyte	RL	CCB 240-286626/175 07/11/2017 01:11							
		Found	C	Found	C	Found	C	Found	C
Arsenic	10	3.3	U						
Barium	200	2.4	U						
Cadmium	2.0	0.29	U						
Chromium	5.0	0.55	U						
Lead	5.0	1.9	U						
Selenium	15	5.1	U						
Silver	5.0	0.92	U						

Italicized analytes were not requested for this sequence.

3-IN
INSTRUMENT BLANKS
METALS

Lab Name: TestAmerica Canton Job No.: 240-81698-1

SDG No.:

Concentration Units: ug/L

Analyte	RL	ICB 240-286239/8-A 07/07/2017 12:05		CCB 240-286239/11-A 07/07/2017 12:11		CCB 240-286239/11-A 07/07/2017 12:31		CCB 240-286239/11-A 07/07/2017 13:33	
		Found	C	Found	C	Found	C	Found	C
Mercury	2.0	0.13	U	0.13	U	0.13	U	0.13	U

Italicized analytes were not requested for this sequence.

3-IN
INSTRUMENT BLANKS
METALS

Lab Name: TestAmerica Canton Job No.: 240-81698-1

SDG No.:

Concentration Units: ug/L

Analyte	RL	CCB 240-286239/11-A 07/07/2017 13:54							
		Found	C	Found	C	Found	C	Found	C
Mercury	2.0	0.13	U						

Italicized analytes were not requested for this sequence.

3-IN
INSTRUMENT BLANKS
METALS

Lab Name: TestAmerica Canton Job No.: 240-81698-1

SDG No.:

Concentration Units: ug/L

Analyte	RL	ICB 240-286457/8-A 07/10/2017 11:48		CCB 240-286457/11-A 07/10/2017 12:45		CCB 240-286457/11-A 07/10/2017 13:10		CCB 240-286457/11-A 07/10/2017 13:33	
		Found	C	Found	C	Found	C	Found	C
Mercury	2.0	0.13	U	0.13	U	0.13	U	0.13	U

Italicized analytes were not requested for this sequence.

3-IN
METHOD BLANK
METALS

Lab Name: TestAmerica Canton Job No.: 240-81698-1

SDG No.:

Concentration Units: mg/L Lab Sample ID: MB 240-286066/2-A

Instrument Code: I12 Batch No.: 286324

CAS No.	Analyte	Concentration	C	Q	Method
7440-38-2	Arsenic	0.0033	U		6010B
7440-39-3	Barium	0.0024	U		6010B
7440-43-9	Cadmium	0.00029	U		6010B
7440-47-3	Chromium	0.00055	U		6010B
7439-92-1	Lead	0.0019	U		6010B
7782-49-2	Selenium	0.0051	U		6010B
7440-22-4	Silver	0.00092	U		6010B

FORM III-IN

3-IN
METHOD BLANK
METALS - TCLP

Lab Name: TestAmerica Canton Job No.: 240-81698-1

SDG No.:

Concentration Units: mg/L Lab Sample ID: LB 240-286004/1-B

Instrument Code: I12 Batch No.: 286324

CAS No.	Analyte	Concentration	C	Q	Method
7440-38-2	Arsenic	0.00431	J		6010B
7440-39-3	Barium	0.123	J		6010B
7440-43-9	Cadmium	0.00029	U		6010B
7440-47-3	Chromium	0.00158	J		6010B
7439-92-1	Lead	0.0019	U		6010B
7782-49-2	Selenium	0.0051	U		6010B
7440-22-4	Silver	0.00092	U		6010B

FORM III-IN

3-IN
METHOD BLANK
METALS

Lab Name: TestAmerica Canton Job No.: 240-81698-1

SDG No.:

Concentration Units: mg/L Lab Sample ID: MB 240-286297/2-A

Instrument Code: I9 Batch No.: 286626

CAS No.	Analyte	Concentration	C	Q	Method
7440-38-2	Arsenic	0.0033	U		6010B
7440-39-3	Barium	0.0024	U		6010B
7440-43-9	Cadmium	0.00029	U		6010B
7440-47-3	Chromium	0.00055	U		6010B
7439-92-1	Lead	0.0019	U		6010B
7782-49-2	Selenium	0.0051	U		6010B
7440-22-4	Silver	0.00092	U		6010B

FORM III-IN

3-IN
METHOD BLANK
METALS - TCLP

Lab Name: TestAmerica Canton Job No.: 240-81698-1

SDG No.:

Concentration Units: mg/L Lab Sample ID: LB 240-286170/1-B

Instrument Code: I9 Batch No.: 286626

CAS No.	Analyte	Concentration	C	Q	Method
7440-38-2	Arsenic	0.00641	J		6010B
7440-39-3	Barium	0.120	J		6010B
7440-43-9	Cadmium	0.00029	U		6010B
7440-47-3	Chromium	0.000745	J		6010B
7439-92-1	Lead	0.0019	U		6010B
7782-49-2	Selenium	0.00802	J		6010B
7440-22-4	Silver	0.00092	U		6010B

FORM III-IN

3-IN
METHOD BLANK
METALS

Lab Name: TestAmerica Canton Job No.: 240-81698-1

SDG No.:

Concentration Units: mg/L Lab Sample ID: MB 240-286067/2-A

Instrument Code: H3 Batch No.: 286335

CAS No.	Analyte	Concentration	C	Q	Method
7439-97-6	Mercury	0.00013	U		7470A

FORM III-IN

3-IN
METHOD BLANK
METALS - TCLP

Lab Name: TestAmerica Canton Job No.: 240-81698-1

SDG No.:

Concentration Units: mg/L Lab Sample ID: LB 240-286004/1-C

Instrument Code: H3 Batch No.: 286335

CAS No.	Analyte	Concentration	C	Q	Method
7439-97-6	Mercury	0.00013	U		7470A

FORM III-IN

3-IN
METHOD BLANK
METALS

Lab Name: TestAmerica Canton Job No.: 240-81698-1

SDG No.:

Concentration Units: mg/L Lab Sample ID: MB 240-286299/2-A

Instrument Code: H3 Batch No.: 286634

CAS No.	Analyte	Concentration	C	Q	Method
7439-97-6	Mercury	0.00013	U		7470A

FORM III-IN

3-IN
METHOD BLANK
METALS - TCLP

Lab Name: TestAmerica Canton Job No.: 240-81698-1

SDG No.:

Concentration Units: mg/L Lab Sample ID: LB 240-286170/1-C

Instrument Code: H3 Batch No.: 286634

CAS No.	Analyte	Concentration	C	Q	Method
7439-97-6	Mercury	0.00013	U		7470A

FORM III-IN

4A-IN
INTERFERENCE CHECK STANDARD
METALS

Lab Name: TestAmerica Canton Job No.: 240-81698-1

SDG No.:

Lab Sample ID: ICSA 240-286324/8 Instrument ID: I12

Lab File ID: I12070717A.asc ICS Source: MTTRICSAW_00034

Concentration Units: ug/L

Analyte	True Solution A	Found Solution A	Percent Recovery
Arsenic		**-3.36**	
Barium		**0.427**	
Cadmium		**0.954**	
Chromium		**2.92**	
Lead		**-0.186**	
Selenium		**-3.61**	
Silver		**-1.38**	
Aluminum	*500000*	*479580*	*96*
Antimony		*6.90*	
Beryllium		*0.265*	
Boron		*4.01*	
Calcium	*500000*	*448570*	*90*
Cobalt		*-3.93*	
Copper		*-3.10*	
Iron	*200000*	*179000*	*90*
Lithium		*9.27*	
Magnesium	*500000*	*475450*	*95*
Manganese		*1.26*	
Molybdenum		*0.313*	
Nickel		*-3.02*	
Potassium		*-28.6*	
Silicon		*19.0*	
Sodium		*34.0*	
Strontium		*5.24*	
Thallium		*4.01*	
Tin		*1.78*	
Titanium		*-0.873*	
Vanadium		*0.996*	
Zinc		*-1.60*	

Calculations are performed before rounding to avoid round-off errors in calculated results.

FORM IVA-IN

4A-IN
INTERFERENCE CHECK STANDARD
METALS

Lab Name: TestAmerica Canton Job No.: 240-81698-1

SDG No.:

Lab Sample ID: ICSAB 240-286324/9 Instrument ID: I12

Lab File ID: I12070717A.asc ICS Source: MTICPICSABW_00014

Concentration Units: ug/L

Analyte	True Solution AB	Found Solution AB	Percent Recovery
Arsenic	**1000**	**992**	**99**
Barium	**500**	**489**	**98**
Cadmium	**1000**	**1004**	**100**
Chromium	**500**	**479**	**96**
Lead	**1000**	**926**	**93**
Selenium	**1000**	**978**	**98**
Silver	**1000**	**1035**	**103**
Aluminum	*500000*	*488120*	*98*
Antimony	*1000*	*978*	*98*
Beryllium	*500*	*462*	*92*
Boron	*500*	*517*	*103*
Calcium	*500000*	*460750*	*92*
Cobalt	*500*	*478*	*96*
Copper	*500*	*517*	*103*
Iron	*200000*	*182100*	*91*
Lithium	*500*	*526*	*105*
Magnesium	*500000*	*488620*	*98*
Manganese	*500*	*471*	*94*
Molybdenum	*1000*	*934*	*93*
Nickel	*1000*	*953*	*95*
Potassium	*10000*	*10137*	*101*
Silicon	*10000*	*9316*	*93*
Sodium	*10000*	*10165*	*102*
Strontium	*1500*	*1392*	*93*
Thallium	*1000*	*972*	*97*
Tin	*500*	*486*	*97*
Titanium	*500*	*487*	*97*
Vanadium	*500*	*474*	*95*
Zinc	*1000*	*950*	*95*

Calculations are performed before rounding to avoid round-off errors in calculated results.

FORM IVA-IN

4A-IN
INTERFERENCE CHECK STANDARD
METALS

Lab Name: TestAmerica Canton Job No.: 240-81698-1

SDG No.:

Lab Sample ID: ICSA 240-286626/8 Instrument ID: I9

Lab File ID: I9071017B.asc ICS Source: MTTRICSAW_00034

Concentration Units: ug/L

Analyte	True Solution A	Found Solution A	Percent Recovery
Arsenic		**0.221**	
Barium		**-0.0490**	
Cadmium		**0.232**	
Chromium		**2.64**	
Lead		**3.26**	
Selenium		**-4.52**	
Silver		**-0.394**	
Aluminum	*500000*	*502500*	*101*
Antimony		*5.43*	
Beryllium		*0.120*	
Boron		*-4.62*	
Calcium	*500000*	*469340*	*94*
Cobalt		*0.0899*	
Copper		*-6.13*	
Iron	*200000*	*188050*	*94*
Lithium		*17.9*	
Magnesium	*500000*	*506680*	*101*
Manganese		*-0.910*	
Molybdenum		*-1.50*	
Nickel		*-1.37*	
Potassium		*42.5*	
Silicon		*4.06*	
Sodium		*135*	
Strontium		*6.31*	
Thallium		*4.63*	
Tin		*-0.246*	
Titanium		*-0.685*	
Vanadium		*-2.61*	
Zinc		*-6.64*	

Calculations are performed before rounding to avoid round-off errors in calculated results.

FORM IVA-IN

4A-IN
INTERFERENCE CHECK STANDARD
METALS

Lab Name: TestAmerica Canton Job No.: 240-81698-1

SDG No.:

Lab Sample ID: ICSAB 240-286626/9 Instrument ID: I9

Lab File ID: I9071017B.asc ICS Source: MTICPICSABW_00014

Concentration Units: ug/L

Analyte	True Solution AB	Found Solution AB	Percent Recovery
Arsenic	**1000**	**1015**	**102**
Barium	**500**	**482**	**96**
Cadmium	**1000**	**1015**	**102**
Chromium	**500**	**477**	**95**
Lead	**1000**	**891**	**89**
Selenium	**1000**	**992**	**99**
Silver	**1000**	**1039**	**104**
Aluminum	*500000*	*516810*	*103*
Antimony	*1000*	*988*	*99*
Beryllium	*500*	*470*	*94*
Boron	*500*	*498*	*100*
Calcium	*500000*	*481050*	*96*
Cobalt	*500*	*499*	*100*
Copper	*500*	*504*	*101*
Iron	*200000*	*193350*	*97*
Lithium	*500*	*541*	*108*
Magnesium	*500000*	*521190*	*104*
Manganese	*500*	*471*	*94*
Molybdenum	*1000*	*910*	*91*
Nickel	*1000*	*987*	*99*
Potassium	*10000*	*10557*	*106*
Silicon	*10000*	*9773*	*98*
Sodium	*10000*	*10698*	*107*
Strontium	*1500*	*1422*	*95*
Thallium	*1000*	*946*	*95*
Tin	*500*	*504*	*101*
Titanium	*500*	*481*	*96*
Vanadium	*500*	*471*	*94*
Zinc	*1000*	*1012*	*101*

Calculations are performed before rounding to avoid round-off errors in calculated results.

FORM IVA-IN

5A-IN
MATRIX SPIKE SAMPLE RECOVERY
METALS - TCLP

Client ID: _____ Lab ID: 240-81623-B-1-D MS ^5

Lab Name: TestAmerica Canton Job No.: 240-81698-1

SDG No.: _____

Matrix: Water Concentration Units: mg/L

% Solids: _____

Analyte	SSR	C	Sample Result (SR)	C	Spike Added (SA)	%R	Control Limit %R	Q	Method
Arsenic	5.12		0.0033	U	5.00	102	75-125		6010B
Barium	49.4		0.39	J	50.0	98	75-125		6010B
Cadmium	0.989		0.0015	J	1.00	99	75-125		6010B
Chromium	4.99		0.035	J	5.00	99	75-125		6010B
Lead	4.90		0.0034	J	5.00	98	75-125		6010B
Selenium	1.05		0.0051	U	1.00	105	75-125		6010B
Silver	0.962		0.00092	U	1.00	96	75-125		6010B

SSR = Spiked Sample Result

Calculations are performed before rounding to avoid round-off errors in calculated results.

FORM VA - IN

5A-IN
MATRIX SPIKE SAMPLE RECOVERY
METALS - TCLP

Client ID: _____ Lab ID: 240-81623-B-1-G MS

Lab Name: TestAmerica Canton Job No.: 240-81698-1

SDG No.: _____

Matrix: Water Concentration Units: mg/L

% Solids: _____

Analyte	SSR	C	Sample Result (SR)	C	Spike Added (SA)	%R	Control Limit %R	Q	Method
Mercury	0.00510		0.00013	U	0.00500	102	80-120		7470A

SSR = Spiked Sample Result

Calculations are performed before rounding to avoid round-off errors in calculated results.

FORM VA - IN

5A-IN
MATRIX SPIKE SAMPLE RECOVERY
METALS - TCLP

Client ID:

Lab ID: 240-81798-K-1-D MS ^5

Lab Name: TestAmerica Canton

Job No.: 240-81698-1

SDG No.:

Matrix: Solid

Concentration Units: mg/L

% Solids:

Analyte	SSR	C	Sample Result (SR)	C	Spike Added (SA)	%R	Control Limit %R	Q	Method
Arsenic	5.17		0.018	J	5.00	103	75-125		6010B
Barium	48.7		0.43	J	50.0	97	75-125		6010B
Cadmium	1.01		0.00036	J	1.00	101	75-125		6010B
Chromium	4.62		0.0017	J	5.00	92	75-125		6010B
Lead	4.62		0.0077	J	5.00	92	75-125		6010B
Selenium	1.05		0.0051	U	1.00	105	75-125		6010B
Silver	1.00		0.00092	U	1.00	100	75-125		6010B

SSR = Spiked Sample Result

Calculations are performed before rounding to avoid round-off errors in calculated results.

FORM VA - IN

5A-IN
MATRIX SPIKE SAMPLE RECOVERY
METALS - TCLP

Client ID: _____ Lab ID: 240-81798-K-1-G MS

Lab Name: TestAmerica Canton Job No.: 240-81698-1

SDG No.: _____

Matrix: Solid Concentration Units: mg/L

% Solids: _____

Analyte	SSR	C	Sample Result (SR)	C	Spike Added (SA)	%R	Control Limit %R	Q	Method
Mercury	0.00434		0.00013	U	0.00500	87	80-120		7470A

SSR = Spiked Sample Result

Calculations are performed before rounding to avoid round-off errors in calculated results.

FORM VA - IN

5A-IN
MATRIX SPIKE DUPLICATE SAMPLE RECOVERY
METALS - TCLP

Client ID: _____ Lab ID: 240-81623-B-1-E MSD ^5

Lab Name: TestAmerica Canton Job No.: 240-81698-1

SDG No.: _____

Matrix: Water Concentration Units: mg/L

% Solids: _____

Analyte	(SDR)	C	Spike Added (SA)	%R	Control Limit %R	RPD	RPD Limit	Q	Method
Arsenic	5.21		5.00	104	75-125	2	20		6010B
Barium	50.8		50.0	101	75-125	3	20		6010B
Cadmium	1.01		1.00	101	75-125	2	20		6010B
Chromium	5.14		5.00	102	75-125	3	20		6010B
Lead	5.04		5.00	101	75-125	3	20		6010B
Selenium	1.06		1.00	106	75-125	0	20		6010B
Silver	1.00		1.00	100	75-125	4	20		6010B

SDR = Sample Duplicate Result

Calculations are performed before rounding to avoid round-off errors in calculated results.

FORM VD - IN

5A-IN
MATRIX SPIKE DUPLICATE SAMPLE RECOVERY
METALS - TCLP

Client ID: _____ Lab ID: 240-81623-B-1-H MSD

Lab Name: TestAmerica Canton Job No.: 240-81698-1

SDG No.: _____

Matrix: Water Concentration Units: mg/L

% Solids: _____

Analyte	(SDR)	C	Spike Added (SA)	%R	Control Limit %R	RPD	RPD Limit	Q	Method
Mercury	0.00452		0.00500	90	80-120	12	20		7470A

SDR = Sample Duplicate Result

Calculations are performed before rounding to avoid round-off errors in calculated results.

FORM VD - IN

5A-IN
MATRIX SPIKE DUPLICATE SAMPLE RECOVERY
METALS - TCLP

Client ID: _____ Lab ID: 240-81798-K-1-E MSD ^5

Lab Name: TestAmerica Canton Job No.: 240-81698-1

SDG No.: _____

Matrix: Solid Concentration Units: mg/L

% Solids: _____

Analyte	(SDR)	C	Spike Added (SA)	%R	Control Limit %R	RPD	RPD Limit	Q	Method
Arsenic	5.23		5.00	104	75-125	1	20		6010B
Barium	48.8		50.0	97	75-125	0	20		6010B
Cadmium	1.02		1.00	102	75-125	2	20		6010B
Chromium	4.71		5.00	94	75-125	2	20		6010B
Lead	4.67		5.00	93	75-125	1	20		6010B
Selenium	1.04		1.00	104	75-125	0	20		6010B
Silver	1.02		1.00	102	75-125	2	20		6010B

SDR = Sample Duplicate Result

Calculations are performed before rounding to avoid round-off errors in calculated results.

FORM VD - IN

5A-IN
MATRIX SPIKE DUPLICATE SAMPLE RECOVERY
METALS - TCLP

Client ID: _____ Lab ID: 240-81798-K-1-H MSD

Lab Name: TestAmerica Canton Job No.: 240-81698-1

SDG No.: _____

Matrix: Solid Concentration Units: mg/L

% Solids: _____

Analyte	(SDR)	C	Spike Added (SA)	%R	Control Limit %R	RPD	RPD Limit	Q	Method
Mercury	0.00454		0.00500	91	80-120	4	20		7470A

SDR = Sample Duplicate Result

Calculations are performed before rounding to avoid round-off errors in calculated results.

FORM VD - IN

7A-IN
LAB CONTROL SAMPLE
METALS

Lab ID: LCS 240-286066/3-A

Lab Name: TestAmerica Canton Job No.: 240-81698-1

Sample Matrix: Water LCS Source: MTICP1_00064

Analyte	Water(mg/L)							
	True	Found	C	%R	Limits		Q	Method
Arsenic	2.00	2.14		107	50	150		6010B
Barium	2.00	2.11		105	50	150		6010B
Cadmium	0.0500	0.0510		102	50	150		6010B
Chromium	0.200	0.201		100	50	150		6010B
Lead	0.500	0.470		94	50	150		6010B
Selenium	2.00	2.18		109	50	150		6010B
Silver	0.0500	0.0513		103	50	150		6010B

Calculations are performed before rounding to avoid round-off errors in calculated results.

FORM VIIA - IN

7A-IN
LAB CONTROL SAMPLE
METALS

Lab ID: LCS 240-286297/3-A

Lab Name: TestAmerica Canton Job No.: 240-81698-1

Sample Matrix: Water LCS Source: MTICP1_00064

Analyte	Water(mg/L)							
	True	Found	C	%R	Limits		Q	Method
Arsenic	2.00	2.18		109	50	150		6010B
Barium	2.00	2.05		103	50	150		6010B
Cadmium	0.0500	0.0512		102	50	150		6010B
Chromium	0.200	0.194		97	50	150		6010B
Lead	0.500	0.444		89	50	150		6010B
Selenium	2.00	2.18		109	50	150		6010B
Silver	0.0500	0.0547		109	50	150		6010B

Calculations are performed before rounding to avoid round-off errors in calculated results.

FORM VIIA - IN

7A-IN
LAB CONTROL SAMPLE
METALS

Lab ID: LCS 240-286067/3-A

Lab Name: TestAmerica Canton Job No.: 240-81698-1

Sample Matrix: Water LCS Source: MTHGCALW_01549

Analyte	Water(mg/L)							
	True	Found	C	%R	Limits		Q	Method
Mercury	0.00500	0.00533		107	80	120		7470A

Calculations are performed before rounding to avoid round-off errors in calculated results.

FORM VIIA - IN

7A-IN
LAB CONTROL SAMPLE
METALS

Lab ID: LCS 240-286299/3-A

Lab Name: TestAmerica Canton Job No.: 240-81698-1

Sample Matrix: Water LCS Source: MTHGCALW_01550

Analyte	Water(mg/L)							
	True	Found	C	%R	Limits		Q	Method
Mercury	0.00500	0.00489		98	80	120		7470A

Calculations are performed before rounding to avoid round-off errors in calculated results.

FORM VIIA - IN

8-IN
ICP-AES AND ICP-MS SERIAL DILUTIONS
METALS - TCLP

Lab ID: 240-81623-B-1-C SD ^5

SDG No:

Lab Name: TestAmerica Canton Job No: 240-81698-1

Matrix: Water Concentration Units: mg/L

Analyte	Initial Sample Result (I)	C	Serial Dilution Result (S)	C	% Difference	Q	Method
Arsenic	0.0033	U	0.017	U	NC		6010B
Barium	0.39	J	0.370	J	4.9		6010B
Cadmium	0.0015	J	0.0015	U	NC		6010B
Chromium	0.035	J	0.0334	J	5.6		6010B
Lead	0.0034	J	0.0095	U	NC		6010B
Selenium	0.0051	U	0.026	U	NC		6010B
Silver	0.00092	U	0.0046	U	NC		6010B

Calculations are performed before rounding to avoid round-off errors in calculated results.

FORM VIII-IN

8-IN
ICP-AES AND ICP-MS SERIAL DILUTIONS
METALS - TCLP

Lab ID: 240-81798-K-1-C SD ^5

SDG No:

Lab Name: TestAmerica Canton Job No: 240-81698-1

Matrix: Solid Concentration Units: mg/L

Analyte	Initial Sample Result (I)	C	Serial Dilution Result (S)	C	% Difference	Q	Method
Arsenic	0.018	J	0.017	U	NC		6010B
Barium	0.43	J	0.429	J	1.2		6010B
Cadmium	0.00036	J	0.0015	U	NC		6010B
Chromium	0.0017	J	0.0028	U	NC		6010B
Lead	0.0077	J	0.0095	U	NC		6010B
Selenium	0.0051	U	0.026	U	NC		6010B
Silver	0.00092	U	0.0046	U	NC		6010B

Calculations are performed before rounding to avoid round-off errors in calculated results.

FORM VIII-IN

9-IN
DETECTION LIMITS
METALS - TCLP

Lab Name: TestAmerica Canton Job Number: 240-81698-1

SDG Number:

Matrix: Water Instrument ID: I12

Method: 6010B MDL Date: 05/09/2016 09:01

Prep Method: 3010A

Leach Method: 1311

Analyte	Wavelength/ Mass	RL (mg/L)	MDL (mg/L)
Arsenic	189.042	0.05	0.0033
Barium	493.409	0.5	0.0024
Cadmium	226.502	0.05	0.00029
Chromium	267.716	0.05	0.00055
Lead	220.353	0.05	0.0019
Selenium	196.026	0.05	0.0051
Silver	328.068	0.05	0.00092

FORM IX - IN

9-IN
CALIBRATION BLANK DETECTION LIMITS
METALS - TCLP

Lab Name: TestAmerica Canton Job Number: 240-81698-1

SDG Number:

Matrix: Water Instrument ID: I12

Method: 6010B XMDL Date: 05/09/2016 09:02

Analyte	Wavelength/ Mass	XRL (ug/L)	XMDL (mg/L)
Arsenic	189.042	10	0.0033
Barium	493.409	200	0.0024
Cadmium	226.502	2	0.00029
Chromium	267.716	5	0.00055
Lead	220.353	5	0.0019
Selenium	196.026	15	0.0051
Silver	328.068	5	0.00092

FORM IX - IN

9-IN
DETECTION LIMITS
METALS - TCLP

Lab Name: TestAmerica Canton Job Number: 240-81698-1

SDG Number:

Matrix: Solid Instrument ID: I9

Method: 6010B MDL Date: 05/09/2016 09:01

Prep Method: 3010A

Leach Method: 1311

Analyte	Wavelength/ Mass	RL (mg/L)	MDL (mg/L)
Arsenic	189.042	0.05	0.0033
Barium	493.409	0.5	0.0024
Cadmium	226.502	0.05	0.00029
Chromium	267.716	0.05	0.00055
Lead	220.353	0.05	0.0019
Selenium	196.026	0.05	0.0051
Silver	328.068	0.05	0.00092

9-IN
CALIBRATION BLANK DETECTION LIMITS
METALS - TCLP

Lab Name: TestAmerica Canton Job Number: 240-81698-1

SDG Number:

Matrix: Solid Instrument ID: I9

Method: 6010B XMDL Date: 05/09/2016 09:02

Analyte	Wavelength/ Mass	XRL (ug/L)	XMDL (mg/L)
Arsenic	189.042	10	0.0033
Barium	493.409	200	0.0024
Cadmium	226.502	2	0.00029
Chromium	267.716	5	0.00055
Lead	220.353	5	0.0019
Selenium	196.026	15	0.0051
Silver	328.068	5	0.00092

FORM IX - IN

9-IN
DETECTION LIMITS
METALS - TCLP

Lab Name: TestAmerica Canton Job Number: 240-81698-1

SDG Number:

Matrix: Solid Instrument ID: H3

Method: 7470A MDL Date: 02/22/2017 15:32

Prep Method: 7470A

Leach Method: 1311

Analyte	Wavelength/ Mass	RL (mg/L)	MDL (mg/L)
Mercury	253.7	0.002	0.00013

FORM IX - IN

9-IN
CALIBRATION BLANK DETECTION LIMITS
METALS - TCLP

Lab Name: TestAmerica Canton Job Number: 240-81698-1

SDG Number:

Matrix: Solid Instrument ID: H3

Method: 7470A XMDL Date: 02/22/2017 15:32

Analyte	Wavelength/ Mass	XRL (ug/L)	XMDL (mg/L)
Mercury	253.7	2	0.00013

FORM IX - IN

9-IN
DETECTION LIMITS
METALS - TCLP

Lab Name: TestAmerica Canton Job Number: 240-81698-1

SDG Number:

Matrix: Water Instrument ID: H3

Method: 7470A MDL Date: 02/22/2017 15:32

Prep Method: 7470A

Leach Method: 1311

Analyte	Wavelength/ Mass	RL (mg/L)	MDL (mg/L)
Mercury	253.7	0.002	0.00013

FORM IX - IN

9-IN
CALIBRATION BLANK DETECTION LIMITS
METALS - TCLP

Lab Name: TestAmerica Canton Job Number: 240-81698-1

SDG Number:

Matrix: Water Instrument ID: H3

Method: 7470A XMDL Date: 02/22/2017 15:32

Analyte	Wavelength/ Mass	XRL (ug/L)	XMDL (mg/L)
Mercury	253.7	2	0.00013

FORM IX - IN

10-IN
ICP-AES INTERELEMENT CORRECTION FACTORS
METALS

Lab Name: TestAmerica Canton Job Number: 240-81698-1

SDG No.:

ICP-AES Instrument ID: I12 Date: 01/20/2017

Analyte	Wave Length	Al	As	Ca	Co	Cr	Cu	Fe	Mn	Mo	Ni	Si	Ti	V	
Aluminum										0.030656				0.066045	
Antimony		-0.000064			-0.000244			-0.000054						0.002941	
Arsenic		0.000016			-0.000333	0.000782			-0.000355	0.002123					
Beryllium														0.000282	
Cadmium			0.01262					0.000002							
Chromium									0.000453						
Cobalt													0.001895		
Copper				0.000018	0.000361			-0.000017					-0.003237		
Lead		-0.000086					0.000101	0.000044			0.000131	0.00004			
Lithium				0.000011											
Nickel					0.000518			0.000081							
Selenium		-0.00002							0.000338						
Thallium		0.000022			0.002708			-0.000025	0.000571					0.001707	
Vanadium								0.000067							
Zinc						-0.001092									

X-IN

10-IN
ICP-AES INTERELEMENT CORRECTION FACTORS
METALS

Lab Name: TestAmerica Canton Job Number: 240-81698-1

SDG No.:

ICP-AES Instrument ID: I9 Date: 02/13/2017

Analyte	Wave Length	Al	As	Ca	Co	Cr	Cu	Fe	Mn	Mo	Ni	Si	Ti	Tl	V
Aluminum										0.029315					0.096009
Antimony		-0.000073			-0.000451			-0.000051							0.002146
Arsenic		0.000034			-0.00051	0.000538			-0.000355	0.001291					
Barium															
Beryllium															0.0000165
Boron															
Cadmium			0.006886					0.000001							
Calcium															
Chromium															
Cobalt													0.002313		
Copper				0.000018	0.000453			-0.000001					-0.000463		
Iron													-		
Lead		-0.000122					0.000515	0.000028			0.00007657	0.000088			
Lithium															
Magnesium															
Manganese															
Molybdenum															
Nickel					0.000799			0.000075							
Potassium															
Selenium		-0.000010							0.000643						
Silver															
Sodium															
Strontium															
Thallium		-0.000010			0.001132			0.000007	0.001101				-0.000497		-0.0005212
Tin															
Titanium															
Vanadium								0.000032							
Zinc						-0.000286									

X-IN

11-IN
LINEAR RANGES
METALS

Lab Name: TestAmerica Canton Job No: 240-81698-1

SDG No.:

Instrument ID: I12 Date: 01/24/2017 12:29

Analyte	Integ. Time (Sec.)	Concentration (ug/L)	Method
Arsenic		5000	6010B
Barium		25000	6010B
Cadmium		2000	6010B
Chromium		20000	6010B
Lead		15000	6010B
Selenium		10000	6010B
Silver		2000	6010B

11-IN
LINEAR RANGES
METALS

Lab Name: TestAmerica Canton Job No: 240-81698-1

SDG No.:

Instrument ID: I9 Date: 08/22/2016 11:36

Analyte	Integ. Time (Sec.)	Concentration (ug/L)	Method
Arsenic		5000	6010B
Barium		20000	6010B
Cadmium		2000	6010B
Chromium		20000	6010B
Lead		15000	6010B
Selenium		10000	6010B
Silver		2000	6010B

12-IN
PREPARATION LOG
METALS

Lab Name: TestAmerica Canton Job No.: 240-81698-1

SDG No.:

Prep Method: 3010A

Lab Sample ID	Preparation Date	Prep Batch	Initial Weight	Initial Volume (mL)	Final Volume (mL)
LB 240-286004/1-B	07/06/2017 14:00	286066		50	50
MB 240-286066/2-A	07/06/2017 14:00	286066		50	50
LCS 240-286066/3-A	07/06/2017 14:00	286066		50	50
240-81623-B-1-D MS ^5	07/06/2017 14:00	286066		50	50
240-81623-B-1-E MSD ^5	07/06/2017 14:00	286066		50	50
240-81698-4	07/06/2017 14:00	286066		50	50
240-81698-6	07/06/2017 14:00	286066		50	50

FORM XII-IN

12-IN
PREPARATION LOG
METALS

Lab Name: TestAmerica Canton Job No.: 240-81698-1

SDG No.:

Prep Method: 3010A

Lab Sample ID	Preparation Date	Prep Batch	Initial Weight	Initial Volume (mL)	Final Volume (mL)
LB 240-286170/1-B	07/07/2017 14:00	286297		50	50
MB 240-286297/2-A	07/07/2017 14:00	286297		50	50
LCS 240-286297/3-A	07/07/2017 14:00	286297		50	50
240-81798-K-1-D MS ^5	07/07/2017 14:00	286297		50	50
240-81798-K-1-E MSD ^5	07/07/2017 14:00	286297		50	50
240-81698-3	07/07/2017 14:00	286297		50	50
240-81698-5	07/07/2017 14:00	286297		50	50

FORM XII-IN

12-IN
PREPARATION LOG
METALS

Lab Name: TestAmerica Canton Job No.: 240-81698-1

SDG No.:

Prep Method: 7470A

Lab Sample ID	Preparation Date	Prep Batch	Initial Weight	Initial Volume (mL)	Final Volume (mL)
LB 240-286004/1-C	07/06/2017 14:00	286067		50	50
MB 240-286067/2-A	07/06/2017 14:00	286067		50	50
LCS 240-286067/3-A	07/06/2017 14:00	286067		50	50
240-81623-B-1-G MS	07/06/2017 14:00	286067		50	50
240-81623-B-1-H MSD	07/06/2017 14:00	286067		50	50
240-81698-4	07/06/2017 14:00	286067		50	50
240-81698-6	07/06/2017 14:00	286067		50	50

FORM XII-IN

12-IN
PREPARATION LOG
METALS

Lab Name: TestAmerica Canton Job No.: 240-81698-1

SDG No.:

Prep Method: 7470A

Lab Sample ID	Preparation Date	Prep Batch	Initial Weight	Initial Volume (mL)	Final Volume (mL)
LB 240-286170/1-C	07/07/2017 14:00	286299		50	50
MB 240-286299/2-A	07/07/2017 14:00	286299		50	50
LCS 240-286299/3-A	07/07/2017 14:00	286299		50	50
240-81798-K-1-G MS	07/07/2017 14:00	286299		50	50
240-81798-K-1-H MSD	07/07/2017 14:00	286299		50	50
240-81698-3	07/07/2017 14:00	286299		50	50
240-81698-5	07/07/2017 14:00	286299		50	50

FORM XII-IN

13-IN
ANALYSIS RUN LOG
METALS

Lab Name: TestAmerica Canton Job No.: 240-81698-1

SDG No.:

Instrument ID: I12 Method: 6010B

Start Date: 07/07/2017 07:33 End Date: 07/07/2017 19:33

Lab Sample ID	D/F	Type	Time	Analytes																			
				Ag	As	Ba	Cd	Cr	Pb	Se													
ICIS 240-286324/1	1		07:33	X	X	X	X	X	X	X													
CALSTD 240-286324/2 IC			07:38	X	X	X	X	X	X	X													
CALSTD 240-286324/3 IC			07:42	X	X	X	X	X	X	X													
ICV 240-286324/4	1		07:47	X	X	X	X	X	X	X													
ICB 240-286324/5	1		07:51	X	X	X	X	X	X	X													
ICVL 240-286324/6	1		07:56	X	X	X	X	X	X	X													
ZZZZZZ			08:00																				
ICSA 240-286324/8	1		08:05	X	X	X	X	X	X	X													
ICSAB 240-286324/9	1		08:09	X	X	X	X	X	X	X													
CCV 240-286324/10			08:13																				
CCB 240-286324/11			08:18																				
ZZZZZZ			08:22																				
ZZZZZZ			08:27																				
ZZZZZZ			08:31																				
ZZZZZZ			08:36																				
ZZZZZZ			08:40																				
ZZZZZZ			08:45																				
CCV 240-286324/18			08:49																				
CCB 240-286324/19			08:54																				
ZZZZZZ			08:58																				
ZZZZZZ			09:03																				
ZZZZZZ			09:07																				
ZZZZZZ			09:12																				
ZZZZZZ			09:16																				
ZZZZZZ			09:22																				
ZZZZZZ			09:26																				
ZZZZZZ			09:31																				
ZZZZZZ			09:35																				
ZZZZZZ			09:40																				
CCV 240-286324/30			09:44																				
CCB 240-286324/31			09:49																				
ZZZZZZ			09:53																				
ZZZZZZ			09:58																				
ZZZZZZ			10:02																				
ZZZZZZ			10:07																				
ZZZZZZ			10:11																				
ZZZZZZ			10:16																				
ZZZZZZ			10:21																				
ZZZZZZ			10:26																				
ZZZZZZ			10:30																				
ZZZZZZ			10:35																				

13-IN
ANALYSIS RUN LOG
METALS

Lab Name: TestAmerica Canton Job No.: 240-81698-1

SDG No.:

Instrument ID: I12 Method: 6010B

Start Date: 07/07/2017 07:33 End Date: 07/07/2017 19:33

Lab Sample ID	D/F	Type	Time	Analytes																			
				Ag	As	Ba	Cd	Cr	Pb	Se													
CCV 240-286324/42	1		10:40	X	X	X	X	X	X	X													
CCB 240-286324/43	1		10:44	X	X	X	X	X	X	X													
ZZZZZZ			10:49																				
ZZZZZZ			10:53																				
LB 240-286004/1-B	1	P	10:58	X	X	X	X	X	X	X													
MB 240-286066/2-A	1	T	11:03	X	X	X	X	X	X	X													
LCS 240-286066/3-A	1	T	11:07	X	X	X	X	X	X	X													
ZZZZZZ			11:12																				
240-81623-B-1-C SD ^5	5	P	11:16	X	X	X	X	X	X	X													
ZZZZZZ			11:21																				
240-81623-B-1-D MS ^5	5	P	11:25	X	X	X	X	X	X	X													
240-81623-B-1-E MSD ^5	5	P	11:30	X	X	X	X	X	X	X													
CCV 240-286324/54	1		11:34	X	X	X	X	X	X	X													
CCB 240-286324/55	1		11:38	X	X	X	X	X	X	X													
ZZZZZZ			11:43																				
ZZZZZZ			11:47																				
CCV 240-286324/58			11:52																				
CCB 240-286324/59			11:56																				
CCVL 240-286324/60			12:01																				
ZZZZZZ			12:07																				
ZZZZZZ			12:12																				
ZZZZZZ			12:17																				
ZZZZZZ			12:21																				
ZZZZZZ			12:26																				
ZZZZZZ			12:31																				
ZZZZZZ			12:35																				
ZZZZZZ			12:40																				
ZZZZZZ			12:44																				
ZZZZZZ			12:49																				
CCV 240-286324/71			12:54																				
CCB 240-286324/72			12:58																				
ZZZZZZ			13:07																				
ZZZZZZ			13:11																				
CCVL 240-286324/75			13:16																				
ZZZZZZ			13:20																				
ZZZZZZ			13:25																				
ZZZZZZ			13:29																				
ZZZZZZ			13:34																				
ZZZZZZ			13:38																				
ZZZZZZ			13:43																				
ZZZZZZ			13:47																				

13-IN
ANALYSIS RUN LOG
METALS

Lab Name: TestAmerica Canton Job No.: 240-81698-1

SDG No.:

Instrument ID: I12 Method: 6010B

Start Date: 07/07/2017 07:33 End Date: 07/07/2017 19:33

Lab Sample ID	D/F	Type	Time	Analytes																			
				Ag	As	Ba	Cd	Cr	Pb	Se													
CCV 240-286324/83	1		13:52	X	X	X	X	X	X	X													
CCB 240-286324/84	1		13:56	X	X	X	X	X	X	X													
ZZZZZZ			14:01																				
ZZZZZZ			14:06																				
ZZZZZZ			14:10																				
ZZZZZZ			14:15																				
ZZZZZZ			14:20																				
ZZZZZZ			14:25																				
ZZZZZZ			14:29																				
240-81698-4	1	P	14:34	X	X	X	X	X	X	X													
240-81698-6	1	P	14:38	X	X	X	X	X	X	X													
ZZZZZZ			14:43																				
CCV 240-286324/95	1		14:47	X	X	X	X	X	X	X													
CCB 240-286324/96	1		14:51	X	X	X	X	X	X	X													
ZZZZZZ			14:56																				
ZZZZZZ			15:01																				
ZZZZZZ			15:05																				
ZZZZZZ			15:09																				
ZZZZZZ			15:14																				
ZZZZZZ			15:18																				
ZZZZZZ			15:22																				
ZZZZZZ			15:26																				
ZZZZZZ			15:31																				
ZZZZZZ			15:35																				
CCV 240-286324/107			15:40																				
CCB 240-286324/108			15:44																				
ZZZZZZ			15:48																				
ZZZZZZ			15:53																				
ZZZZZZ			15:57																				
ZZZZZZ			16:02																				
ZZZZZZ			16:06																				
ZZZZZZ			16:11																				
ZZZZZZ			16:15																				
ZZZZZZ			16:20																				
ZZZZZZ			16:24																				
ZZZZZZ			16:28																				
CCV 240-286324/119			16:33																				
CCB 240-286324/120			16:37																				
ZZZZZZ			16:42																				
ZZZZZZ			16:46																				
ZZZZZZ			16:50																				
ZZZZZZ			16:54																				

13-IN
ANALYSIS RUN LOG
METALS

Lab Name: TestAmerica Canton Job No.: 240-81698-1

SDG No.:

Instrument ID: I12 Method: 6010B

Start Date: 07/07/2017 07:33 End Date: 07/07/2017 19:33

Lab Sample ID	D/F	Type	Time	Analytes																			
				Ag	As	Ba	Cd	Cr	Pb	Se													
ZZZZZZ			16:59																				
ZZZZZZ			17:03																				
ZZZZZZ			17:08																				
ZZZZZZ			17:12																				
ZZZZZZ			17:17																				
ZZZZZZ			17:21																				
CCV 240-286324/131			17:26																				
CCB 240-286324/132			17:30																				
ZZZZZZ			17:34																				
ZZZZZZ			17:39																				
ZZZZZZ			17:43																				
ZZZZZZ			17:48																				
ZZZZZZ			17:52																				
ZZZZZZ			17:56																				
ZZZZZZ			18:01																				
ZZZZZZ			18:05																				
ZZZZZZ			18:09																				
ZZZZZZ			18:14																				
CCV 240-286324/143			18:18																				
CCB 240-286324/144			18:22																				
ZZZZZZ			18:26																				
ZZZZZZ			18:31																				
ZZZZZZ			18:35																				
ZZZZZZ			18:40																				
ZZZZZZ			18:45																				
ZZZZZZ			18:49																				
ZZZZZZ			18:54																				
ZZZZZZ			18:58																				
ZZZZZZ			19:02																				
ZZZZZZ			19:07																				
CCV 240-286324/155			19:11																				
CCB 240-286324/156			19:15																				
ZZZZZZ			19:20																				
ZZZZZZ			19:24																				
CCV 240-286324/159			19:29																				
CCB 240-286324/160			19:33																				

Prep Types

P = TCLP

T = Total/NA

13-IN
ANALYSIS RUN LOG
METALS

Lab Name: TestAmerica Canton Job No.: 240-81698-1

SDG No.:

Instrument ID: I9 Method: 6010B

Start Date: 07/10/2017 12:31 End Date: 07/11/2017 01:36

Lab Sample ID	D/F	Type	Time	Analytes																			
				Ag	As	Ba	Cd	Cr	Pb	Se													
ICIS 240-286626/1	1		12:31	X	X	X	X	X	X	X													
CALSTD 240-286626/2 IC			12:35	X	X	X	X	X	X	X													
CALSTD 240-286626/3 IC			12:40	X	X	X	X	X	X	X													
ICV 240-286626/4	1		12:44	X	X	X	X	X	X	X													
ICB 240-286626/5	1		12:48	X	X	X	X	X	X	X													
ICVL 240-286626/6	1		12:52	X	X	X	X	X	X	X													
ZZZZZZ			12:57																				
ICSA 240-286626/8	1		13:01	X	X	X	X	X	X	X													
ICSAB 240-286626/9	1		13:05	X	X	X	X	X	X	X													
CCV 240-286626/10			13:10																				
CCB 240-286626/11			13:13																				
ZZZZZZ			13:18																				
ZZZZZZ			13:22																				
ZZZZZZ			13:27																				
ZZZZZZ			13:31																				
ZZZZZZ			13:35																				
ZZZZZZ			13:40																				
CCV 240-286626/18			13:44																				
CCB 240-286626/19			13:48																				
ZZZZZZ			13:55																				
ZZZZZZ			14:00																				
CCV 240-286626/22			14:04																				
CCB 240-286626/23			14:08																				
ZZZZZZ			14:13																				
ZZZZZZ			14:17																				
ZZZZZZ			14:22																				
ZZZZZZ			14:26																				
ZZZZZZ			14:30																				
ZZZZZZ			14:35																				
CCV 240-286626/30			14:39																				
CCB 240-286626/31			14:43																				
ZZZZZZ			14:48																				
ZZZZZZ			14:52																				
ZZZZZZ			14:57																				
ZZZZZZ			15:01																				
ZZZZZZ			15:05																				
ZZZZZZ			15:09																				
ZZZZZZ			15:14																				
ZZZZZZ			15:18																				
ZZZZZZ			15:22																				
ZZZZZZ			15:27																				

13-IN
ANALYSIS RUN LOG
METALS

Lab Name: TestAmerica Canton Job No.: 240-81698-1

SDG No.:

Instrument ID: I9 Method: 6010B

Start Date: 07/10/2017 12:31 End Date: 07/11/2017 01:36

Lab Sample ID	D/F	Type	Time	Analytes																			
				Ag	As	Ba	Cd	Cr	Pb	Se													
CCV 240-286626/42			15:31																				
CCB 240-286626/43			15:35																				
ZZZZZZ			15:40																				
ZZZZZZ			15:44																				
ZZZZZZ			15:49																				
ZZZZZZ			15:53																				
ZZZZZZ			15:57																				
ZZZZZZ			16:01																				
ZZZZZZ			16:06																				
ZZZZZZ			16:11																				
ZZZZZZ			16:15																				
ZZZZZZ			16:19																				
CCV 240-286626/54			16:24																				
CCB 240-286626/55			16:28																				
CCVL 240-286626/56			16:32																				
ZZZZZZ			16:36																				
ZZZZZZ			16:41																				
ZZZZZZ			16:45																				
ZZZZZZ			16:49																				
ZZZZZZ			16:53																				
ZZZZZZ			16:57																				
ZZZZZZ			17:01																				
ZZZZZZ			17:05																				
ZZZZZZ			17:10																				
CCV 240-286626/66			17:14																				
CCB 240-286626/67			17:18																				
ZZZZZZ			17:22																				
ZZZZZZ			17:27																				
ZZZZZZ			17:31																				
ZZZZZZ			17:35																				
ZZZZZZ			17:40																				
ZZZZZZ			17:44																				
ZZZZZZ			17:49																				
ZZZZZZ			17:53																				
ZZZZZZ			17:58																				
ZZZZZZ			18:02																				
CCV 240-286626/78			18:06																				
CCB 240-286626/79			18:10																				
ZZZZZZ			18:15																				
ZZZZZZ			18:19																				
ZZZZZZ			18:23																				
ZZZZZZ			18:28																				

13-IN
ANALYSIS RUN LOG
METALS

Lab Name: TestAmerica Canton Job No.: 240-81698-1

SDG No.:

Instrument ID: I9 Method: 6010B

Start Date: 07/10/2017 12:31 End Date: 07/11/2017 01:36

Lab Sample ID	D/F	Type	Time	Analytes																			
				Ag	As	Ba	Cd	Cr	Pb	Se													
ZZZZZZ			18:32																				
ZZZZZZ			18:37																				
ZZZZZZ			18:41																				
ZZZZZZ			18:45																				
ZZZZZZ			18:49																				
ZZZZZZ			18:54																				
CCV 240-286626/90			18:58																				
CCB 240-286626/91			19:02																				
ZZZZZZ			19:06																				
ZZZZZZ			19:10																				
ZZZZZZ			19:14																				
ZZZZZZ			19:18																				
ZZZZZZ			19:23																				
ZZZZZZ			19:27																				
ZZZZZZ			19:31																				
ZZZZZZ			19:36																				
ZZZZZZ			19:40																				
ZZZZZZ			19:44																				
CCV 240-286626/102			19:49																				
CCB 240-286626/103			19:53																				
ZZZZZZ			19:57																				
ZZZZZZ			20:01																				
ZZZZZZ			20:06																				
ZZZZZZ			20:10																				
ZZZZZZ			20:14																				
ZZZZZZ			20:19																				
ZZZZZZ			20:23																				
ZZZZZZ			20:27																				
ZZZZZZ			20:32																				
ZZZZZZ			20:36																				
CCV 240-286626/114			20:40																				
CCB 240-286626/115			20:44																				
ZZZZZZ			20:49																				
ZZZZZZ			20:53																				
ZZZZZZ			20:58																				
ZZZZZZ			21:02																				
ZZZZZZ			21:06																				
ZZZZZZ			21:11																				
ZZZZZZ			21:16																				
ZZZZZZ			21:20																				
ZZZZZZ			21:25																				
ZZZZZZ			21:29																				

13-IN
ANALYSIS RUN LOG
METALS

Lab Name: TestAmerica Canton Job No.: 240-81698-1

SDG No.:

Instrument ID: I9 Method: 6010B

Start Date: 07/10/2017 12:31 End Date: 07/11/2017 01:36

Lab Sample ID	D/F	Type	Time	Analytes																			
				Ag	As	Ba	Cd	Cr	Pb	Se													
CCV 240-286626/126			21:34																				
CCB 240-286626/127			21:38																				
ZZZZZZ			21:42																				
ZZZZZZ			21:47																				
ZZZZZZ			21:51																				
ZZZZZZ			21:56																				
ZZZZZZ			22:00																				
ZZZZZZ			22:05																				
ZZZZZZ			22:09																				
ZZZZZZ			22:14																				
ZZZZZZ			22:18																				
ZZZZZZ			22:23																				
CCV 240-286626/138	1		22:28	X	X	X	X	X	X	X													
CCB 240-286626/139	1		22:32	X	X	X	X	X	X	X													
LB 240-286170/1-B	1	P	22:36	X	X	X	X	X	X	X													
MB 240-286297/2-A	1	T	22:40	X	X	X	X	X	X	X													
LCS 240-286297/3-A	1	T	22:45	X	X	X	X	X	X	X													
ZZZZZZ			22:49																				
240-81798-K-1-C SD ^5	5	P	22:53	X	X	X	X	X	X	X													
ZZZZZZ			22:58																				
240-81798-K-1-D MS ^5	5	P	23:02	X	X	X	X	X	X	X													
240-81798-K-1-E MSD ^5	5	P	23:07	X	X	X	X	X	X	X													
ZZZZZZ			23:11																				
ZZZZZZ			23:15																				
CCV 240-286626/150	1		23:20	X	X	X	X	X	X	X													
CCB 240-286626/151	1		23:24	X	X	X	X	X	X	X													
ZZZZZZ			23:28																				
ZZZZZZ			23:33																				
ZZZZZZ			23:37																				
ZZZZZZ			23:42																				
ZZZZZZ			23:46																				
ZZZZZZ			23:51																				
ZZZZZZ			23:55																				
ZZZZZZ			00:00																				
ZZZZZZ			00:05																				
240-81698-3	1	P	00:09	X	X	X	X	X	X	X													
CCV 240-286626/162	1		00:14	X	X	X	X	X	X	X													
CCB 240-286626/163	1		00:18	X	X	X	X	X	X	X													
240-81698-5	1	P	00:22	X	X	X	X	X	X	X													
ZZZZZZ			00:26																				
ZZZZZZ			00:31																				

13-IN
ANALYSIS RUN LOG
METALS

Lab Name: TestAmerica Canton Job No.: 240-81698-1

SDG No.:

Instrument ID: I9 Method: 6010B

Start Date: 07/10/2017 12:31 End Date: 07/11/2017 01:36

Lab Sample ID	D/F	Type	Time	Analytes																			
				Ag	As	Ba	Cd	Cr	Pb	Se													
ZZZZZZ			00:36																				
ZZZZZZ			00:40																				
ZZZZZZ			00:45																				
ZZZZZZ			00:49																				
ZZZZZZ			00:54																				
ZZZZZZ			00:57																				
ZZZZZZ			01:02																				
CCV 240-286626/174	1		01:06	X	X	X	X	X	X	X													
CCB 240-286626/175	1		01:11	X	X	X	X	X	X	X													
ZZZZZZ			01:15																				
ZZZZZZ			01:19																				
ZZZZZZ			01:24																				
ZZZZZZ			01:28																				
CCV 240-286626/180			01:32																				
CCB 240-286626/181			01:36																				

Prep Types

P = TCLP

T = Total/NA

13-IN
ANALYSIS RUN LOG
METALS

Lab Name: TestAmerica Canton Job No.: 240-81698-1

SDG No.:

Instrument ID: H3 Method: 7470A

Start Date: 07/07/2017 11:50 End Date: 07/07/2017 15:29

Lab Sample ID	D/F	Type	Time	Analytes																			
				Hg																			
IC 240-286239/1-A			11:50	X																			
IC 240-286239/2-A			11:52	X																			
IC 240-286239/3-A			11:54	X																			
IC 240-286239/4-A			11:56	X																			
IC 240-286239/5-A			11:58	X																			
IC 240-286239/6-A			12:00	X																			
ICV 240-286239/7-A	1		12:03	X																			
ICB 240-286239/8-A	1		12:05	X																			
CRA 240-286239/9-A	1		12:07	X																			
CCV 240-286239/10-A	1		12:09	X																			
CCB 240-286239/11-A	1		12:11	X																			
LB 240-286004/1-C	1	P	12:14	X																			
MB 240-286067/2-A	1	T	12:16	X																			
LCS 240-286067/3-A	1	T	12:18	X																			
ZZZZZZ			12:20																				
ZZZZZZ			12:22																				
240-81623-B-1-G MS	1	P	12:24	X																			
240-81623-B-1-H MSD	1	P	12:26	X																			
CCV 240-286239/10-A	1		12:28	X																			
CCB 240-286239/11-A	1		12:31	X																			
CCV 240-286239/10-A			12:47																				
CCB 240-286239/11-A			12:49																				
ZZZZZZ			12:52																				
ZZZZZZ			12:54																				
ZZZZZZ			12:55																				
CCV 240-286239/10-A			12:57																				
CCB 240-286239/11-A			13:00																				
ZZZZZZ			13:02																				
ZZZZZZ			13:04																				
ZZZZZZ			13:06																				
ZZZZZZ			13:08																				
ZZZZZZ			13:11																				
ZZZZZZ			13:13																				
ZZZZZZ			13:15																				
ZZZZZZ			13:17																				
ZZZZZZ			13:19																				
ZZZZZZ			13:21																				
CCV 240-286239/10-A			13:22																				
CCB 240-286239/11-A			13:24																				
ZZZZZZ			13:27																				
ZZZZZZ			13:29																				
CCV 240-286239/10-A	1		13:31	X																			

13-IN
ANALYSIS RUN LOG
METALS

Lab Name: TestAmerica Canton Job No.: 240-81698-1

SDG No.:

Instrument ID: H3 Method: 7470A

Start Date: 07/07/2017 11:50 End Date: 07/07/2017 15:29

Lab Sample ID	D/F	Type	Time	Analytes																			
				Hg																			
CCB 240-286239/11-A	1		13:33	X																			
ZZZZZZ			13:35																				
ZZZZZZ			13:37																				
ZZZZZZ			13:39																				
ZZZZZZ			13:41																				
240-81698-4	1	P	13:43	X																			
240-81698-6	1	P	13:45	X																			
ZZZZZZ			13:47																				
ZZZZZZ			13:49																				
ZZZZZZ			13:51																				
CCV 240-286239/10-A	1		13:53	X																			
CCB 240-286239/11-A	1		13:54	X																			
ZZZZZZ			13:57																				
ZZZZZZ			13:59																				
ZZZZZZ			14:01																				
ZZZZZZ			14:03																				
ZZZZZZ			14:05																				
ZZZZZZ			14:07																				
ZZZZZZ			14:09																				
ZZZZZZ			14:11																				
ZZZZZZ			14:13																				
ZZZZZZ			14:15																				
CCV 240-286239/10-A			14:17																				
CCB 240-286239/11-A			14:19																				
ZZZZZZ			14:22																				
ZZZZZZ			14:24																				
ZZZZZZ			14:26																				
ZZZZZZ			14:28																				
ZZZZZZ			14:30																				
ZZZZZZ			14:32																				
ZZZZZZ			14:34																				
ZZZZZZ			14:37																				
ZZZZZZ			14:39																				
ZZZZZZ			14:41																				
CCV 240-286239/10-A			14:43																				
CCB 240-286239/11-A			14:44																				
ZZZZZZ			14:47																				
ZZZZZZ			14:49																				
ZZZZZZ			14:51																				
ZZZZZZ			14:53																				
ZZZZZZ			14:55																				
ZZZZZZ			14:57																				

13-IN
ANALYSIS RUN LOG
METALS

Lab Name: TestAmerica Canton Job No.: 240-81698-1

SDG No.:

Instrument ID: H3 Method: 7470A

Start Date: 07/07/2017 11:50 End Date: 07/07/2017 15:29

Lab Sample ID	D/F	Type	Time	Analytes																			
				Hg																			
ZZZZZZ			14:58																				
ZZZZZZ			15:00																				
ZZZZZZ			15:02																				
ZZZZZZ			15:04																				
ZZZZZZ			15:06																				
CCV 240-286239/10-A			15:08																				
CCB 240-286239/11-A			15:10																				
CCV 240-286239/10-A			15:13																				
CCB 240-286239/11-A			15:15																				
ZZZZZZ			15:25																				
CCV 240-286239/10-A			15:27																				
CCB 240-286239/11-A			15:29																				

Prep Types
P = TCLP
T = Total/NA

13-IN
ANALYSIS RUN LOG
METALS

Lab Name: TestAmerica Canton Job No.: 240-81698-1

SDG No.:

Instrument ID: H3 Method: 7470A

Start Date: 07/10/2017 11:33 End Date: 07/10/2017 19:43

Lab Sample ID	D/F	Type	Time	Analytes																			
				Hg																			
IC 240-286457/1-A			11:33	X																			
IC 240-286457/2-A			11:35	X																			
IC 240-286457/3-A			11:37	X																			
IC 240-286457/4-A			11:39	X																			
IC 240-286457/5-A			11:41	X																			
IC 240-286457/6-A			11:43	X																			
ICV 240-286457/7-A	1		11:46	X																			
ICB 240-286457/8-A	1		11:48	X																			
CRA 240-286457/9-A	1		11:50	X																			
CCV 240-286457/10-A			11:52																				
CCB 240-286457/11-A			11:54																				
ZZZZZZ			11:57																				
ZZZZZZ			11:59																				
ZZZZZZ			12:00																				
ZZZZZZ			12:02																				
ZZZZZZ			12:05																				
ZZZZZZ			12:07																				
ZZZZZZ			12:09																				
ZZZZZZ			12:12																				
ZZZZZZ			12:14																				
ZZZZZZ			12:16																				
CCV 240-286457/10-A			12:18																				
CCB 240-286457/11-A			12:19																				
ZZZZZZ			12:22																				
ZZZZZZ			12:24																				
ZZZZZZ			12:26																				
ZZZZZZ			12:28																				
ZZZZZZ			12:30																				
ZZZZZZ			12:32																				
ZZZZZZ			12:33																				
ZZZZZZ			12:35																				
ZZZZZZ			12:38																				
ZZZZZZ			12:40																				
CCV 240-286457/10-A	1		12:42	X																			
CCB 240-286457/11-A	1		12:45	X																			
ZZZZZZ			12:47																				
LB 240-286170/1-C	1	P	12:49	X																			
MB 240-286299/2-A	1	T	12:51	X																			
LCS 240-286299/3-A	1	T	12:53	X																			
ZZZZZZ			12:55																				
240-81798-K-1-G MS	1	P	12:57	X																			
240-81798-K-1-H MSD	1	P	12:59	X																			

13-IN
ANALYSIS RUN LOG
METALS

Lab Name: TestAmerica Canton Job No.: 240-81698-1

SDG No.:

Instrument ID: H3 Method: 7470A

Start Date: 07/10/2017 11:33 End Date: 07/10/2017 19:43

Lab Sample ID	D/F	Type	Time	Analytes																			
				Hg																			
ZZZZZZ			13:02																				
ZZZZZZ			13:04																				
ZZZZZZ			13:06																				
CCV 240-286457/10-A	1		13:08	X																			
CCB 240-286457/11-A	1		13:10	X																			
ZZZZZZ			13:12																				
ZZZZZZ			13:14																				
ZZZZZZ			13:16																				
ZZZZZZ			13:18																				
ZZZZZZ			13:20																				
ZZZZZZ			13:22																				
ZZZZZZ			13:24																				
ZZZZZZ			13:26																				
240-81698-3	1	P	13:28	X																			
240-81698-5	1	P	13:30	X																			
CCV 240-286457/10-A	1		13:32	X																			
CCB 240-286457/11-A	1		13:33	X																			
ZZZZZZ			13:36																				
ZZZZZZ			13:38																				
ZZZZZZ			13:40																				
ZZZZZZ			13:42																				
ZZZZZZ			13:44																				
ZZZZZZ			13:46																				
ZZZZZZ			13:48																				
ZZZZZZ			13:50																				
ZZZZZZ			13:52																				
ZZZZZZ			13:54																				
CCV 240-286457/10-A			13:56																				
CCB 240-286457/11-A			13:58																				
ZZZZZZ			14:00																				
ZZZZZZ			14:02																				
ZZZZZZ			14:04																				
ZZZZZZ			14:06																				
ZZZZZZ			14:08																				
ZZZZZZ			14:10																				
ZZZZZZ			14:12																				
ZZZZZZ			14:14																				
ZZZZZZ			14:16																				
ZZZZZZ			14:18																				
CCV 240-286457/10-A			14:20																				
CCB 240-286457/11-A			14:22																				
ZZZZZZ			14:25																				

13-IN
ANALYSIS RUN LOG
METALS

Lab Name: TestAmerica Canton Job No.: 240-81698-1

SDG No.:

Instrument ID: H3 Method: 7470A

Start Date: 07/10/2017 11:33 End Date: 07/10/2017 19:43

Lab Sample ID	D/F	Type	Time	Analytes																			
				Hg																			
ZZZZZZ			14:27																				
ZZZZZZ			14:29																				
ZZZZZZ			14:31																				
ZZZZZZ			14:33																				
ZZZZZZ			14:35																				
ZZZZZZ			14:37																				
ZZZZZZ			14:39																				
ZZZZZZ			14:41																				
ZZZZZZ			14:43																				
CCV 240-286457/10-A			14:45																				
CCB 240-286457/11-A			14:47																				
ZZZZZZ			14:49																				
ZZZZZZ			14:51																				
ZZZZZZ			14:53																				
ZZZZZZ			14:55																				
ZZZZZZ			14:57																				
ZZZZZZ			14:59																				
ZZZZZZ			15:01																				
ZZZZZZ			15:03																				
ZZZZZZ			15:05																				
ZZZZZZ			15:07																				
CCV 240-286457/10-A			15:09																				
CCB 240-286457/11-A			15:11																				
ZZZZZZ			15:13																				
ZZZZZZ			15:15																				
ZZZZZZ			15:17																				
ZZZZZZ			15:19																				
ZZZZZZ			15:21																				
ZZZZZZ			15:23																				
ZZZZZZ			15:25																				
ZZZZZZ			15:27																				
ZZZZZZ			15:29																				
ZZZZZZ			15:31																				
CCV 240-286457/10-A			15:33																				
CCB 240-286457/11-A			15:35																				
ZZZZZZ			15:38																				
ZZZZZZ			15:40																				
ZZZZZZ			15:42																				
ZZZZZZ			15:44																				
ZZZZZZ			15:45																				
ZZZZZZ			15:47																				
ZZZZZZ			15:49																				

13-IN
ANALYSIS RUN LOG
METALS

Lab Name: TestAmerica Canton Job No.: 240-81698-1

SDG No.:

Instrument ID: H3 Method: 7470A

Start Date: 07/10/2017 11:33 End Date: 07/10/2017 19:43

Lab Sample ID	D/F	Type	Time	Analytes																			
				Hg																			
ZZZZZZ			15:51																				
ZZZZZZ			15:53																				
ZZZZZZ			15:55																				
CCV 240-286457/10-A			15:57																				
CCB 240-286457/11-A			15:59																				
ZZZZZZ			16:02																				
ZZZZZZ			16:03																				
ZZZZZZ			16:05																				
ZZZZZZ			16:07																				
ZZZZZZ			16:09																				
CCV 240-286457/10-A			16:12																				
CCB 240-286457/11-A			16:14																				
CCV 240-286457/10-A			16:40																				
CCB 240-286457/11-A			16:42																				
ZZZZZZ			16:45																				
ZZZZZZ			16:47																				
ZZZZZZ			16:49																				
ZZZZZZ			16:51																				
ZZZZZZ			16:53																				
ZZZZZZ			16:55																				
CCV 240-286457/10-A			16:58																				
CCB 240-286457/11-A			16:59																				
ZZZZZZ			17:02																				
ZZZZZZ			17:04																				
ZZZZZZ			17:06																				
ZZZZZZ			17:08																				
ZZZZZZ			17:10																				
ZZZZZZ			17:12																				
ZZZZZZ			17:14																				
ZZZZZZ			17:16																				
ZZZZZZ			17:17																				
ZZZZZZ			17:19																				
CCV 240-286457/10-A			17:21																				
CCB 240-286457/11-A			17:23																				
ZZZZZZ			17:26																				
ZZZZZZ			17:28																				
ZZZZZZ			17:30																				
ZZZZZZ			17:32																				
ZZZZZZ			17:34																				
ZZZZZZ			17:36																				
ZZZZZZ			17:37																				
ZZZZZZ			17:39																				

13-IN
ANALYSIS RUN LOG
METALS

Lab Name: TestAmerica Canton Job No.: 240-81698-1

SDG No.:

Instrument ID: H3 Method: 7470A

Start Date: 07/10/2017 11:33 End Date: 07/10/2017 19:43

Lab Sample ID	D/F	Type	Time	Analytes																			
				Hg																			
ZZZZZZ			17:41																				
ZZZZZZ			17:43																				
CCV 240-286457/10-A			17:45																				
CCB 240-286457/11-A			17:48																				
ZZZZZZ			17:50																				
ZZZZZZ			17:52																				
ZZZZZZ			17:54																				
ZZZZZZ			17:56																				
ZZZZZZ			17:59																				
ZZZZZZ			18:01																				
ZZZZZZ			18:03																				
ZZZZZZ			18:04																				
ZZZZZZ			18:06																				
ZZZZZZ			18:08																				
CCV 240-286457/10-A			18:10																				
CCB 240-286457/11-A			18:12																				
ZZZZZZ			18:15																				
ZZZZZZ			18:17																				
ZZZZZZ			18:19																				
ZZZZZZ			18:21																				
ZZZZZZ			18:23																				
ZZZZZZ			18:24																				
ZZZZZZ			18:26																				
ZZZZZZ			18:28																				
ZZZZZZ			18:30																				
ZZZZZZ			18:32																				
CCV 240-286457/10-A			18:34																				
CCB 240-286457/11-A			18:36																				
ZZZZZZ			18:39																				
ZZZZZZ			18:41																				
ZZZZZZ			18:43																				
ZZZZZZ			18:44																				
ZZZZZZ			18:46																				
ZZZZZZ			18:49																				
ZZZZZZ			18:51																				
ZZZZZZ			18:53																				
ZZZZZZ			18:55																				
ZZZZZZ			18:57																				
CCV 240-286457/10-A			18:59																				
CCB 240-286457/11-A			19:01																				
ZZZZZZ			19:04																				
ZZZZZZ			19:06																				

13-IN
ANALYSIS RUN LOG
METALS

Lab Name: TestAmerica Canton Job No.: 240-81698-1

SDG No.:

Instrument ID: H3 Method: 7470A

Start Date: 07/10/2017 11:33 End Date: 07/10/2017 19:43

Lab Sample ID	D/F	Type	Time	Analytes																			
				Hg																			
ZZZZZZ			19:07																				
ZZZZZZ			19:09																				
ZZZZZZ			19:11																				
ZZZZZZ			19:13																				
ZZZZZZ			19:15																				
ZZZZZZ			19:17																				
ZZZZZZ			19:19																				
ZZZZZZ			19:21																				
CCV 240-286457/10-A			19:23																				
CCB 240-286457/11-A			19:25																				
ZZZZZZ			19:28																				
ZZZZZZ			19:29																				
ZZZZZZ			19:31																				
ZZZZZZ			19:33																				
ZZZZZZ			19:35																				
ZZZZZZ			19:37																				
ZZZZZZ			19:39																				
CCV 240-286457/10-A			19:41																				
CCB 240-286457/11-A			19:43																				

Prep Types

P = TCLP

T = Total/NA

METALS BATCH WORKSHEET

Lab Name: TestAmerica Canton Job No.: 240-81698-1

SDG No.:

Batch Number: 286004 Batch Start Date: 07/05/17 15:20 Batch Analyst: Henry, Meagan

Batch Method: 1311 Batch End Date: 07/06/17 08:00

Lab Sample ID	Client Sample ID	Method Chain	Basis	EXpH(0-14) 00019	EXTCLPBUFF1 01191	EXTCLPBUFF1 01192	EXTCLPFILTERS 00033	EXTCLPHCLW 00055	AnalysisComment
LB 240-286004/1		1311, 3010A, 6010B		1 No Unit	1 mL	1 mL	1	1 mL	Buffer 1
240-81698-H-4	WC-FDCON-062817	1311, 3010A, 6010B	P	1 No Unit	1 mL	1 mL	1	1 mL	Filter only H2O
240-81698-F-6	WC-WGEO-062817	1311, 3010A, 6010B	P	1 No Unit	1 mL	1 mL	1	1 mL	Filter only H2O

Batch Notes	
Tumbler Rotations per Minute	A, C, E, J = 31 rpm

Basis	Basis Description
P	TCLP

The pound sign (#) in the amount added field denotes that the reagent was used undiluted. All calculations are performed using the stated concentration for this reagent.

METALS BATCH WORKSHEET

Lab Name: TestAmerica Canton Job No.: 240-81698-1

SDG No.:

Batch Number: 286066 Batch Start Date: 07/06/17 14:00 Batch Analyst: Dillon, William K

Batch Method: 3010A Batch End Date: 07/06/17 22:00

Lab Sample ID	Client Sample ID	Method Chain	Basis	InitialAmount	FinalAmount	MT1to1HCL 00070	MTAGSPIKEW 00073	MTICP1 00064	MTICP2A 00073
LB 240-286004/1-A		3010A, 6010B		50 mL	50 mL	5 mL			
MB 240-286066/2		3010A, 6010B		50 mL	50 mL	5 mL			
LCS 240-286066/3		3010A, 6010B		50 mL	50 mL	5 mL	1 mL	1 mL	1 mL
240-81623-B-1-B MS		3010A, 6010B	P	50 mL	50 mL	5 mL			1 mL
240-81623-B-1-B MSD		3010A, 6010B	P	50 mL	50 mL	5 mL			1 mL
240-81698-H-4-A	WC-FDCON-062817	3010A, 6010B	P	50 mL	50 mL	5 mL			
240-81698-F-6-A	WC-WGEO-062817	3010A, 6010B	P	50 mL	50 mL	5 mL			

Lab Sample ID	Client Sample ID	Method Chain	Basis	MTNONRCRA+ODD 00008	MTRCRA 00012	MTTMHNO3 00123			
LB 240-286004/1-A		3010A, 6010B				3 mL			
MB 240-286066/2		3010A, 6010B				3 mL			
LCS 240-286066/3		3010A, 6010B				3 mL			
240-81623-B-1-B MS		3010A, 6010B	P	1 mL	0.5 mL	3 mL			
240-81623-B-1-B MSD		3010A, 6010B	P	1 mL	0.5 mL	3 mL			
240-81698-H-4-A	WC-FDCON-062817	3010A, 6010B	P			3 mL			
240-81698-F-6-A	WC-WGEO-062817	3010A, 6010B	P			3 mL			

Batch Notes	
Filter Paper ID	9814481
Hot Block ID	HB1
Pipette ID	MP1-MP3-MP5
Digestion Tube/Cup ID	1703076

Basis	Basis Description
P	TCLP

The pound sign (#) in the amount added field denotes that the reagent was used undiluted. All calculations are performed using the stated concentration for this reagent.

METALS BATCH WORKSHEET

Lab Name: TestAmerica Canton Job No.: 240-81698-1

SDG No.:

Batch Number: 286170 Batch Start Date: 07/06/17 17:00 Batch Analyst: Jones, Diane

Batch Method: 1311 Batch End Date: 07/07/17 09:05

Lab Sample ID	Client Sample ID	Method Chain	Basis	EXpH(0-14) 00019	EXTCLPBUFF1 01194	EXTCLPBUFF1 01195	EXTCLPFILTERS 00033	EXTCLPHCLW 00055	AnalysisComment
LB 240-286170/1		1311, 3010A, 6010B		1 No Unit	1 mL	1 mL	1	1 mL	Buffer 1
240-81698-C-3	WC-FSOIL-062817	1311, 3010A, 6010B	P	1 No Unit	1 mL	1 mL	1	1 mL	
240-81698-D-5	WC-SGEO-062817	1311, 3010A, 6010B	P	1 No Unit	1 mL	1 mL	1	1 mL	

Batch Notes	
Tumbler Rotations per Minute	A, B, C, D, E, J, I = 31rpm

Basis	Basis Description
P	TCLP

The pound sign (#) in the amount added field denotes that the reagent was used undiluted. All calculations are performed using the stated concentration for this reagent.

METALS BATCH WORKSHEET

Lab Name: TestAmerica Canton Job No.: 240-81698-1

SDG No.:

Batch Number: 286297 Batch Start Date: 07/07/17 14:00 Batch Analyst: Dillon, William K

Batch Method: 3010A Batch End Date: 07/07/17 22:00

Lab Sample ID	Client Sample ID	Method Chain	Basis	InitialAmount	FinalAmount	MT1to1HCL 00070	MTAGSPIKEW 00073	MTICP1 00064	MTICP2A 00073
LB 240-286170/1-A		3010A, 6010B		50 mL	50 mL	5 mL			
MB 240-286297/2		3010A, 6010B		50 mL	50 mL	5 mL			
LCS 240-286297/3		3010A, 6010B		50 mL	50 mL	5 mL	1 mL	1 mL	1 mL
240-81798-K-1-B MS		3010A, 6010B	P	50 mL	50 mL	5 mL			1 mL
240-81798-K-1-B MSD		3010A, 6010B	P	50 mL	50 mL	5 mL			1 mL
240-81698-C-3-B	WC-FSOIL-062817	3010A, 6010B	P	50 mL	50 mL	5 mL			
240-81698-D-5-A	WC-SGEO-062817	3010A, 6010B	P	50 mL	50 mL	5 mL			

Lab Sample ID	Client Sample ID	Method Chain	Basis	MTNONRCRA+ODD 00008	MTRCRA 00012	MTTMHNO3 00123			
LB 240-286170/1-A		3010A, 6010B				3 mL			
MB 240-286297/2		3010A, 6010B				3 mL			
LCS 240-286297/3		3010A, 6010B				3 mL			
240-81798-K-1-B MS		3010A, 6010B	P	1 mL	0.5 mL	3 mL			
240-81798-K-1-B MSD		3010A, 6010B	P	1 mL	0.5 mL	3 mL			
240-81698-C-3-B	WC-FSOIL-062817	3010A, 6010B	P			3 mL			
240-81698-D-5-A	WC-SGEO-062817	3010A, 6010B	P			3 mL			

Batch Notes	
Filter Paper ID	9814481
Hot Block ID	HB1
Pipette ID	MP1-MP3-MP5
Digestion Tube/Cup ID	1703076

Basis	Basis Description
P	TCLP

The pound sign (#) in the amount added field denotes that the reagent was used undiluted. All calculations are performed using the stated concentration for this reagent.

METALS BATCH WORKSHEET

Lab Name: TestAmerica Canton Job No.: 240-81698-1

SDG No.:

Batch Number: 286004 Batch Start Date: 07/05/17 15:20 Batch Analyst: Henry, Meagan

Batch Method: 1311 Batch End Date: 07/06/17 08:00

Lab Sample ID	Client Sample ID	Method Chain	Basis	EXpH(0-14) 00019	EXTCLPBUFF1 01191	EXTCLPBUFF1 01192	EXTCLPFILTERS 00033	EXTCLPHCLW 00055	AnalysisComment
LB 240-286004/1		1311, 7470A, 7470A		1 No Unit	1 mL	1 mL	1	1 mL	Buffer 1
240-81698-H-4	WC-FDCON-062817	1311, 7470A, 7470A	P	1 No Unit	1 mL	1 mL	1	1 mL	Filter only H2O
240-81698-F-6	WC-WGEO-062817	1311, 7470A, 7470A	P	1 No Unit	1 mL	1 mL	1	1 mL	Filter only H2O

Batch Notes	
Tumbler Rotations per Minute	A, C, E, J = 31 rpm

Basis	Basis Description
P	TCLP

The pound sign (#) in the amount added field denotes that the reagent was used undiluted. All calculations are performed using the stated concentration for this reagent.

METALS BATCH WORKSHEET

Lab Name: TestAmerica Canton Job No.: 240-81698-1

SDG No.:

Batch Number: 286067 Batch Start Date: 07/06/17 14:00 Batch Analyst: Dillon, William K

Batch Method: 7470A Batch End Date: 07/06/17 16:00

Lab Sample ID	Client Sample ID	Method Chain	Basis	InitialAmount	FinalAmount	K2S2O8 00065	MTH2S04 00044	MTHGCALW 01549	MTKMN04W 00136
LB 240-286004/1-A		7470A, 7470A		50 mL	50 mL	4 mL	2.5 mL		7.5 mL
MB 240-286067/2		7470A, 7470A		50 mL	50 mL	4 mL	2.5 mL		7.5 mL
LCS 240-286067/3		7470A, 7470A		50 mL	50 mL	4 mL	2.5 mL	2.5 mL	7.5 mL
240-81623-B-1-B MS		7470A, 7470A	P	50 mL	50 mL	4 mL	2.5 mL	2.5 mL	7.5 mL
240-81623-B-1-B MSD		7470A, 7470A	P	50 mL	50 mL	4 mL	2.5 mL	2.5 mL	7.5 mL
240-81698-H-4-A	WC-FDCON-062817	7470A, 7470A	P	50 mL	50 mL	4 mL	2.5 mL		7.5 mL
240-81698-F-6-A	WC-WGEO-062817	7470A, 7470A	P	50 mL	50 mL	4 mL	2.5 mL		7.5 mL

Lab Sample ID	Client Sample ID	Method Chain	Basis	MTTMHNO3 00123					
LB 240-286004/1-A		7470A, 7470A		1.25 mL					
MB 240-286067/2		7470A, 7470A		1.25 mL					
LCS 240-286067/3		7470A, 7470A		1.25 mL					
240-81623-B-1-B MS		7470A, 7470A	P	1.25 mL					
240-81623-B-1-B MSD		7470A, 7470A	P	1.25 mL					
240-81698-H-4-A	WC-FDCON-062817	7470A, 7470A	P	1.25 mL					
240-81698-F-6-A	WC-WGEO-062817	7470A, 7470A	P	1.25 mL					

Batch Notes	
Batch Comment	Takeout temps within range
Hot Block ID	c1
Pipette ID	mp2
Digestion Tube/Cup ID	1703076

Basis	Basis Description
P	TCLP

The pound sign (#) in the amount added field denotes that the reagent was used undiluted. All calculations are performed using the stated concentration for this reagent.

METALS BATCH WORKSHEET

Lab Name: TestAmerica Canton Job No.: 240-81698-1

SDG No.:

Batch Number: 286170 Batch Start Date: 07/06/17 17:00 Batch Analyst: Jones, Diane

Batch Method: 1311 Batch End Date: 07/07/17 09:05

Lab Sample ID	Client Sample ID	Method Chain	Basis	EXpH(0-14) 00019	EXTCLPBUFF1 01194	EXTCLPBUFF1 01195	EXTCLPFILTERS 00033	EXTCLPHCLW 00055	AnalysisComment
LB 240-286170/1		1311, 7470A, 7470A		1 No Unit	1 mL	1 mL	1	1 mL	Buffer 1
240-81698-C-3	WC-FSOIL-062817	1311, 7470A, 7470A	P	1 No Unit	1 mL	1 mL	1	1 mL	
240-81698-D-5	WC-SGEO-062817	1311, 7470A, 7470A	P	1 No Unit	1 mL	1 mL	1	1 mL	

Batch Notes	
Tumbler Rotations per Minute	A, B, C, D, E, J, I = 31rpm

Basis	Basis Description
P	TCLP

The pound sign (#) in the amount added field denotes that the reagent was used undiluted. All calculations are performed using the stated concentration for this reagent.

METALS BATCH WORKSHEET

Lab Name: TestAmerica Canton Job No.: 240-81698-1

SDG No.:

Batch Number: 286239 Batch Start Date: 07/07/17 08:50 Batch Analyst: Nguyen, Diem

Batch Method: 7470A Batch End Date: 07/07/17 10:50

Lab Sample ID	Client Sample ID	Method Chain	Basis	InitialAmount	FinalAmount	K2S2O8 00065	MTH2S04 00044	MTHGCALW 01550	MTHgICV_00001 00197
ICV 240-286239/7		7470A, 7470A		50 mL	50 mL	4 mL	2.5 mL		2.5 mL
ICB 240-286239/8		7470A, 7470A		50 mL	50 mL	4 mL	2.5 mL		
CRA 240-286239/9		7470A, 7470A		50 mL	50 mL	4 mL	2.5 mL	0.1 mL	
CCV 240-286239/10		7470A, 7470A		50 mL	50 mL	4 mL	2.5 mL	2.5 mL	
CCB 240-286239/11		7470A, 7470A		50 mL	50 mL	4 mL	2.5 mL		

Lab Sample ID	Client Sample ID	Method Chain	Basis	MTKMN04W 00136	MTTMHNO3 00123				
ICV 240-286239/7		7470A, 7470A		7.5 mL	1.25 mL				
ICB 240-286239/8		7470A, 7470A		7.5 mL	1.25 mL				
CRA 240-286239/9		7470A, 7470A		7.5 mL	1.25 mL				
CCV 240-286239/10		7470A, 7470A		7.5 mL	1.25 mL				
CCB 240-286239/11		7470A, 7470A		7.5 mL	1.25 mL				

Batch Notes	
Batch Comment	takeout temp in range
Hot Block ID	C1
Pipette ID	A5, A7, MP1, MP2, MP5
Digestion Tube/Cup ID	1703076

Basis	Basis Description

The pound sign (#) in the amount added field denotes that the reagent was used undiluted. All calculations are performed using the stated concentration for this reagent.

METALS BATCH WORKSHEET

Lab Name: TestAmerica Canton Job No.: 240-81698-1

SDG No.:

Batch Number: 286299 Batch Start Date: 07/07/17 14:00 Batch Analyst: Dillon, William K

Batch Method: 7470A Batch End Date: 07/07/17 16:00

Lab Sample ID	Client Sample ID	Method Chain	Basis	InitialAmount	FinalAmount	K2S2O8 00065	MTH2S04 00044	MTHGCALW 01550	MTKMN04W 00136
LB 240-286170/1-A		7470A, 7470A		50 mL	50 mL	4 mL	2.5 mL		7.5 mL
MB 240-286299/2		7470A, 7470A		50 mL	50 mL	4 mL	2.5 mL		7.5 mL
LCS 240-286299/3		7470A, 7470A		50 mL	50 mL	4 mL	2.5 mL	2.5 mL	7.5 mL
240-81798-K-1-B MS		7470A, 7470A	P	50 mL	50 mL	4 mL	2.5 mL	2.5 mL	7.5 mL
240-81798-K-1-B MSD		7470A, 7470A	P	50 mL	50 mL	4 mL	2.5 mL	2.5 mL	7.5 mL
240-81698-C-3-B	WC-FSOIL-062817	7470A, 7470A	P	50 mL	50 mL	4 mL	2.5 mL		7.5 mL
240-81698-D-5-A	WC-SGEO-062817	7470A, 7470A	P	50 mL	50 mL	4 mL	2.5 mL		7.5 mL

Lab Sample ID	Client Sample ID	Method Chain	Basis	MTTMHNO3 00123					
LB 240-286170/1-A		7470A, 7470A		1.25 mL					
MB 240-286299/2		7470A, 7470A		1.25 mL					
LCS 240-286299/3		7470A, 7470A		1.25 mL					
240-81798-K-1-B MS		7470A, 7470A	P	1.25 mL					
240-81798-K-1-B MSD		7470A, 7470A	P	1.25 mL					
240-81698-C-3-B	WC-FSOIL-062817	7470A, 7470A	P	1.25 mL					
240-81698-D-5-A	WC-SGEO-062817	7470A, 7470A	P	1.25 mL					

Batch Notes	
Batch Comment	Takeout temps within range
Hot Block ID	B1
Pipette ID	mp2
Digestion Tube/Cup ID	1703076

Basis	Basis Description
P	TCLP

The pound sign (#) in the amount added field denotes that the reagent was used undiluted. All calculations are performed using the stated concentration for this reagent.

METALS BATCH WORKSHEET

Lab Name: TestAmerica Canton Job No.: 240-81698-1

SDG No.:

Batch Number: 286457 Batch Start Date: 07/10/17 09:00 Batch Analyst: Nguyen, Diem

Batch Method: 7470A Batch End Date: 07/10/17 11:00

Lab Sample ID	Client Sample ID	Method Chain	Basis	InitialAmount	FinalAmount	K2S2O8 00065	MTH2S04 00044	MTHGCALW 01551	MTHgICV_00001 00198
ICV 240-286457/7		7470A, 7470A		50 mL	50 mL	4 mL	2.5 mL		2.5 mL
ICB 240-286457/8		7470A, 7470A		50 mL	50 mL	4 mL	2.5 mL		
CRA 240-286457/9		7470A, 7470A		50 mL	50 mL	4 mL	2.5 mL	0.1 mL	
CCV 240-286457/10		7470A, 7470A		50 mL	50 mL	4 mL	2.5 mL	2.5 mL	
CCB 240-286457/11		7470A, 7470A		50 mL	50 mL	4 mL	2.5 mL		

Lab Sample ID	Client Sample ID	Method Chain	Basis	MTKMN04W 00136	MTTMHNO3 00123				
ICV 240-286457/7		7470A, 7470A		7.5 mL	1.25 mL				
ICB 240-286457/8		7470A, 7470A		7.5 mL	1.25 mL				
CRA 240-286457/9		7470A, 7470A		7.5 mL	1.25 mL				
CCV 240-286457/10		7470A, 7470A		7.5 mL	1.25 mL				
CCB 240-286457/11		7470A, 7470A		7.5 mL	1.25 mL				

Batch Notes	
Batch Comment	takeout temp in range
Hot Block ID	C1
Pipette ID	A5, A7, MP1, MP2, MP5
Digestion Tube/Cup ID	1703076

Basis	Basis Description

The pound sign (#) in the amount added field denotes that the reagent was used undiluted. All calculations are performed using the stated concentration for this reagent.

GENERAL CHEMISTRY

COVER PAGE
GENERAL CHEMISTRY

Lab Name: TestAmerica Canton Job Number: 240-81698-1

SDG No.:

Project: MRC Waste Characterization

Client Sample ID	Lab Sample ID
WC-FSOIL-062817	240-81698-3
WC-FDCON-062817	240-81698-4
WC-SGEO-062817	240-81698-5
WC-WGEO-062817	240-81698-6

Comments:

1B-IN
INORGANIC ANALYSIS DATA SHEET
GENERAL CHEMISTRY

Client Sample ID: WC-FSOIL-062817
Lab Sample ID: 240-81698-3
Lab Name: TestAmerica Canton
Job No.: 240-81698-1
SDG ID.:
Matrix: Solid
Date Sampled: 06/28/2017 08:40
Reporting Basis: WET
Date Received: 06/29/2017 09:20

CAS No.	Analyte	Result	RL	MDL	Units	C	Q	DIL	Method
	Flashpoint	>200	1.00	1.00	Degrees F			1	1010A

1B-IN
INORGANIC ANALYSIS DATA SHEET
GENERAL CHEMISTRY

Client Sample ID: WC-FDCON-062817
Lab Sample ID: 240-81698-4
Lab Name: TestAmerica Canton
Job No.: 240-81698-1
SDG ID.:
Matrix: Water
Date Sampled: 06/28/2017 08:55
Reporting Basis: WET
Date Received: 06/29/2017 09:20

CAS No.	Analyte	Result	RL	MDL	Units	C	Q	DIL	Method
	Flashpoint	>200	1.00	1.00	Degrees F			1	1010A

1B-IN
INORGANIC ANALYSIS DATA SHEET
GENERAL CHEMISTRY

Client Sample ID: WC-SGEO-062817
Lab Sample ID: 240-81698-5
Lab Name: TestAmerica Canton
Job No.: 240-81698-1
SDG ID.:
Matrix: Solid
Date Sampled: 06/28/2017 08:15
Reporting Basis: WET
Date Received: 06/29/2017 09:20

CAS No.	Analyte	Result	RL	MDL	Units	C	Q	DIL	Method
	Flashpoint	>200	1.00	1.00	Degrees F			1	1010A

1B-IN
INORGANIC ANALYSIS DATA SHEET
GENERAL CHEMISTRY

Client Sample ID: WC-WGEO-062817
Lab Sample ID: 240-81698-6
Lab Name: TestAmerica Canton
Job No.: 240-81698-1
SDG ID.:
Matrix: Water
Date Sampled: 06/28/2017 08:25
Reporting Basis: WET
Date Received: 06/29/2017 09:20

CAS No.	Analyte	Result	RL	MDL	Units	C	Q	DIL	Method
	Flashpoint	>200	1.00	1.00	Degrees F			1	1010A

6-IN
DUPLICATE
GENERAL CHEMISTRY

Lab Name: TestAmerica Canton Job No.: 240-81698-1

SDG No.:

Matrix: Solid

Method	Client Sample ID	Lab Sample ID	Analyte	Result	Unit	RPD	RPD Limit	Qual
Batch ID: 286224 Date: 07/07/2017 07:57								
1010A		240-81858-A-2	Flashpoint	133	Degrees F			
1010A		240-81858-A-2 DU	Flashpoint	133.0	Degrees F	0	20	

Calculations are performed before rounding to avoid round-off errors in calculated results.

FORM VI-IN

6-IN
DUPLICATE
GENERAL CHEMISTRY

Lab Name: TestAmerica Canton Job No.: 240-81698-1

SDG No.:

Matrix: Water

Method	Client Sample ID	Lab Sample ID	Analyte	Result	Unit	RPD	RPD Limit	Qual
Batch ID: 286734 Date: 07/11/2017 13:54								
1010A		240-82056-P-9	Flashpoint	>200	Degrees F			
1010A		240-82056-P-9 DU	Flashpoint	>200	Degrees F	NC	20	

Calculations are performed before rounding to avoid round-off errors in calculated results.

FORM VI-IN

7A-IN
LAB CONTROL SAMPLE
GENERAL CHEMISTRY

Lab Name: TestAmerica Canton Job No.: 240-81698-1

SDG No.:

Matrix: Solid

Method	Lab Sample ID	Analyte	Result	C	Unit	Spike Amount	Pct. Rec.	Limits	RPD	RPD Limit	Q
Batch ID: 286224	Date: 07/07/2017 07:28										
						LCS Source: WCP-XYLENE_00020					
1010A	LCS 240-286224/1	Flashpoint	83.00		Degrees F	81.0	102	97-103			

Calculations are performed before rounding to avoid round-off errors in calculated results.

FORM VIIA-IN

7A-IN
LAB CONTROL SAMPLE
GENERAL CHEMISTRY

Lab Name: TestAmerica Canton Job No.: 240-81698-1

SDG No.:

Matrix: Water

Method	Lab Sample ID	Analyte	Result	C	Unit	Spike Amount	Pct. Rec.	Limits	RPD	RPD Limit	Q
Batch ID: 286734	Date: 07/11/2017 13:15										
						LCS Source: WCP-XYLENE_00020					
1010A	LCS 240-286734/1	Flashpoint	79.00		Degrees F	81.0	98	97-103			

Calculations are performed before rounding to avoid round-off errors in calculated results.

FORM VIIA-IN

9-IN
DETECTION LIMITS
GENERAL CHEMISTRY

Lab Name: TestAmerica Canton Job Number: 240-81698-1

SDG Number:

Matrix: Solid Instrument ID: WHITEY

Method: 1010A RL Date: 01/28/2010 09:55

Analyte	Wavelength/ Mass	RL (Degrees F)	
Flashpoint		1	

FORM IX - IN

9-IN
CALIBRATION BLANK DETECTION LIMITS
GENERAL CHEMISTRY

Lab Name: TestAmerica Canton Job Number: 240-81698-1

SDG Number:

Matrix: Solid Instrument ID: WHITEY

Method: 1010A XRL Date: 01/28/2010 09:55

Analyte	Wavelength/ Mass	XRL (Degrees F)	
Flashpoint		1	

FORM IX - IN

9-IN
DETECTION LIMITS
GENERAL CHEMISTRY

Lab Name: TestAmerica Canton Job Number: 240-81698-1

SDG Number:

Matrix: Water Instrument ID: WHITEY

Method: 1010A RL Date: 01/28/2010 09:55

Analyte	Wavelength/ Mass	RL (Degrees F)	
Flashpoint		1	

FORM IX - IN

9-IN
CALIBRATION BLANK DETECTION LIMITS
GENERAL CHEMISTRY

Lab Name: TestAmerica Canton Job Number: 240-81698-1

SDG Number:

Matrix: Water Instrument ID: WHITEY

Method: 1010A XRL Date: 01/28/2010 09:55

Analyte	Wavelength/ Mass	XRL (Degrees F)	
Flashpoint		1	

FORM IX - IN

9-IN
DETECTION LIMITS
GENERAL CHEMISTRY

Lab Name: TestAmerica Canton Job Number: 240-81698-1

SDG Number:

Matrix: Solid Instrument ID: NOEQUIP

Method: Moisture RL Date: 01/28/2010 09:24

Analyte	Wavelength/ Mass	RL (%)	
Percent Moisture		0.1	
Percent Solids		0.1	

FORM IX - IN

9-IN
CALIBRATION BLANK DETECTION LIMITS
GENERAL CHEMISTRY

Lab Name: TestAmerica Canton Job Number: 240-81698-1

SDG Number:

Matrix: Solid Instrument ID: NOEQUIP

Method: Moisture XRL Date: 01/28/2010 09:24

Analyte	Wavelength/ Mass	XRL (mg/L)	
Percent Moisture		10	
Percent Solids		10	

FORM IX - IN

13-IN
ANALYSIS RUN LOG
GENERAL CHEMISTRY

Lab Name: TestAmerica Canton Job No.: 240-81698-1

SDG No.:

Instrument ID: WHITEY Method: 1010A

Start Date: 07/07/2017 07:28 End Date: 07/07/2017 11:52

Lab Sample ID	D/F	Type	Time	Analytes																			
				FP																			
LCS 240-286224/1	1	T	07:28	X																			
240-81858-A-2 DU	1	T	07:57	X																			
ZZZZZZ			08:26																				
ZZZZZZ			08:56																				
ZZZZZZ			09:25																				
ZZZZZZ			09:55																				
ZZZZZZ			10:24																				
ZZZZZZ			10:53																				
240-81698-3	1	T	11:23	X																			
240-81698-5	1	T	11:52	X																			

Prep Types
T = Total/NA

13-IN
ANALYSIS RUN LOG
GENERAL CHEMISTRY

Lab Name: TestAmerica Canton Job No.: 240-81698-1

SDG No.:

Instrument ID: WHITEY Method: 1010A

Start Date: 07/11/2017 13:15 End Date: 07/11/2017 17:10

Lab Sample ID	D/F	Type	Time	Analytes																			
				FP																			
LCS 240-286734/1	1	T	13:15	X																			
ZZZZZZ			13:34																				
240-82056-P-9 DU	1	T	13:54	X																			
ZZZZZZ			14:13																				
ZZZZZZ			14:33																				
240-81698-4	1	T	14:53	X																			
240-81698-6	1	T	15:12	X																			
ZZZZZZ			15:32																				
ZZZZZZ			15:51																				
ZZZZZZ			16:11																				
ZZZZZZ			16:31																				
ZZZZZZ			16:50																				
ZZZZZZ			17:10																				

Prep Types
T = Total/NA

13-IN
ANALYSIS RUN LOG
GENERAL CHEMISTRY

Lab Name: TestAmerica Canton Job No.: 240-81698-1

SDG No.:

Instrument ID: NOEQUIP Method: Moisture

Start Date: 06/30/2017 08:30 End Date: 06/30/2017 15:33

Lab Sample ID	D/F	Type	Time	Analytes																			
				% Sol	Moist																		
ZZZZZZ			08:30																				
ZZZZZZ			08:30																				
ZZZZZZ			08:30																				
ZZZZZZ			08:30																				
ZZZZZZ			08:30																				
ZZZZZZ			08:30																				
ZZZZZZ			08:30																				
ZZZZZZ			08:30																				
ZZZZZZ			08:30																				
ZZZZZZ			08:30																				
ZZZZZZ			08:30																				
ZZZZZZ			08:30																				
ZZZZZZ			08:30																				
ZZZZZZ			08:30																				
ZZZZZZ			08:30																				
ZZZZZZ			08:30																				
ZZZZZZ			08:30																				
ZZZZZZ			08:30																				
ZZZZZZ			08:30																				
240-81733-A-17 DU	1	T	08:30	X	X																		
ZZZZZZ			08:30																				
ZZZZZZ			08:30																				
ZZZZZZ			08:30																				
ZZZZZZ			08:30																				
ZZZZZZ			08:30																				
ZZZZZZ			08:30																				
ZZZZZZ			08:30																				
240-81698-3	1	T	08:30	X	X																		
240-81698-5	1	T	08:30	X	X																		
ZZZZZZ			08:30																				
ZZZZZZ			08:30																				
ZZZZZZ			08:30																				
ZZZZZZ			08:30																				
ZZZZZZ			08:30																				
ZZZZZZ			08:30																				
ZZZZZZ			08:30																				
ZZZZZZ			08:30																				
ZZZZZZ			08:30																				
ZZZZZZ			08:30																				
ZZZZZZ			08:30																				
ZZZZZZ			08:30																				

13-IN
ANALYSIS RUN LOG
GENERAL CHEMISTRY

Lab Name: TestAmerica Canton Job No.: 240-81698-1

SDG No.:

Instrument ID: NOEQUIP Method: Moisture

Start Date: 06/30/2017 08:30 End Date: 06/30/2017 15:33

Lab Sample ID	D/F	Type	Time	Analytes																			
				% Sol	Moist																		
ZZZZZZ			08:30																				
ZZZZZZ			08:30																				
ZZZZZZ			08:30																				
ZZZZZZ			08:30																				
ZZZZZZ			08:30																				
ZZZZZZ			08:30																				
ZZZZZZ			08:30																				
ZZZZZZ			08:30																				
ZZZZZZ			08:30																				
ZZZZZZ			08:30																				
ZZZZZZ			08:30																				
ZZZZZZ			08:30																				
ZZZZZZ			08:30																				
ZZZZZZ			08:30																				
ZZZZZZ			08:30																				
ZZZZZZ			08:30																				
ZZZZZZ			08:30																				
ZZZZZZ			08:30																				
ZZZZZZ			08:30																				
ZZZZZZ			08:30																				
ZZZZZZ			08:30																				
ZZZZZZ			08:30																				
ZZZZZZ			08:30																				
ZZZZZZ			08:30																				
ZZZZZZ			08:30																				
ZZZZZZ			08:30																				
ZZZZZZ			08:30																				
ZZZZZZ			08:30																				
ZZZZZZ			08:30																				
ZZZZZZ			08:30																				
ZZZZZZ			08:30																				
ZZZZZZ			08:30																				
ZZZZZZ			08:30																				
ZZZZZZ			08:30																				
ZZZZZZ			08:30																				
ZZZZZZ			08:30																				
ZZZZZZ			08:30																				
ZZZZZZ			08:30																				

13-IN
ANALYSIS RUN LOG
GENERAL CHEMISTRY

Lab Name: TestAmerica Canton Job No.: 240-81698-1

SDG No.:

Instrument ID: NOEQUIP Method: Moisture

Start Date: 06/30/2017 08:30 End Date: 06/30/2017 15:33

Lab Sample ID	D/F	Type	Time	Analytes																			
				% Sol	Moist																		
ZZZZZZ			08:30																				
ZZZZZZ			08:30																				
ZZZZZZ			08:30																				
ZZZZZZ			08:30																				
ZZZZZZ			08:30																				
ZZZZZZ			08:30																				
ZZZZZZ			08:30																				
ZZZZZZ			08:30																				
ZZZZZZ			08:30																				
ZZZZZZ			08:30																				
ZZZZZZ			08:30																				
ZZZZZZ			08:30																				
ZZZZZZ			08:30																				
ZZZZZZ			08:30																				
ZZZZZZ			08:30																				
ZZZZZZ			09:23																				
ZZZZZZ			09:23																				
ZZZZZZ			09:23																				
ZZZZZZ			09:23																				
ZZZZZZ			09:23																				
ZZZZZZ			09:23																				
ZZZZZZ			09:23																				
ZZZZZZ			09:23																				
ZZZZZZ			09:23																				
ZZZZZZ			09:23																				
ZZZZZZ			09:23																				
ZZZZZZ			09:23																				
ZZZZZZ			15:23																				
ZZZZZZ			15:23																				
ZZZZZZ			15:23																				
ZZZZZZ			15:23																				
ZZZZZZ			15:23																				
ZZZZZZ			15:23																				
ZZZZZZ			15:23																				
ZZZZZZ			15:23																				
ZZZZZZ			15:23																				
ZZZZZZ			15:23																				
ZZZZZZ			15:23																				
ZZZZZZ			15:23																				
ZZZZZZ			15:23																				

13-IN
ANALYSIS RUN LOG
GENERAL CHEMISTRY

Lab Name: TestAmerica Canton Job No.: 240-81698-1

SDG No.:

Instrument ID: NOEQUIP Method: Moisture

Start Date: 06/30/2017 08:30 End Date: 06/30/2017 15:33

Lab Sample ID	D/F	Type	Time	Analytes																			
				% Sol	Moist																		
ZZZZZZ			15:23																				
ZZZZZZ			15:23																				
ZZZZZZ			15:23																				
ZZZZZZ			15:23																				
ZZZZZZ			15:23																				
ZZZZZZ			15:23																				
ZZZZZZ			15:23																				
ZZZZZZ			15:23																				
ZZZZZZ			15:23																				
ZZZZZZ			15:23																				
ZZZZZZ			15:23																				
ZZZZZZ			15:23																				
ZZZZZZ			15:23																				
ZZZZZZ			15:23																				
ZZZZZZ			15:23																				
ZZZZZZ			15:23																				
ZZZZZZ			15:23																				
ZZZZZZ			15:23																				
ZZZZZZ			15:23																				
ZZZZZZ			15:23																				
ZZZZZZ			15:23																				
ZZZZZZ			15:23																				
ZZZZZZ			15:23																				
ZZZZZZ			15:23																				
ZZZZZZ			15:23																				
ZZZZZZ			15:23																				
ZZZZZZ			15:23																				
ZZZZZZ			15:23																				
ZZZZZZ			15:23																				
ZZZZZZ			15:23																				
ZZZZZZ			15:23																				
ZZZZZZ			15:23																				
ZZZZZZ			15:23																				
ZZZZZZ			15:23																				
ZZZZZZ			15:23																				
ZZZZZZ			15:23																				

13-IN
ANALYSIS RUN LOG
GENERAL CHEMISTRY

Lab Name: TestAmerica Canton Job No.: 240-81698-1

SDG No.:

Instrument ID: NOEQUIP Method: Moisture

Start Date: 06/30/2017 08:30 End Date: 06/30/2017 15:33

Lab Sample ID	D/F	Type	Time	Analytes																			
				% Sol	Moist																		
ZZZZZZ			15:23																				
ZZZZZZ			15:23																				
ZZZZZZ			15:23																				
ZZZZZZ			15:23																				
ZZZZZZ			15:33																				
ZZZZZZ			15:33																				
ZZZZZZ			15:33																				

Prep Types

T = Total/NA

GENERAL CHEMISTRY BATCH WORKSHEET

Lab Name: TestAmerica Canton Job No.: 240-81698-1

SDG No.:

Batch Number: 286224 Batch Start Date: 07/07/17 07:28 Batch Analyst: Harshman, Tom

Batch Method: 1010A Batch End Date: 07/07/17 12:22

Lab Sample ID	Client Sample ID	Method Chain	Basis	FinalAmount	InitialTemp	WCP-XYLENE 00020			
LCS 240-286224/1		1010A		70 mL	68 Degrees F	70 mL			
240-81858-A-2 DU		1010A	T	70 mL	37 Degrees F				
240-81698-C-3	WC-FSOIL-062817	1010A	T	70 g	73 Degrees F				
240-81698-C-5	WC-SGEO-062817	1010A	T	70 g	73 Degrees F				

Batch Notes	
Equipment ID	Whitey

Basis	Basis Description
T	Total/NA

The pound sign (#) in the amount added field denotes that the reagent was used undiluted. All calculations are performed using the stated concentration for this reagent.

GENERAL CHEMISTRY BATCH WORKSHEET

Lab Name: TestAmerica Canton Job No.: 240-81698-1

SDG No.:

Batch Number: 286734 Batch Start Date: 07/11/17 13:15 Batch Analyst: Woodward, Bruce

Batch Method: 1010A Batch End Date: 07/11/17 17:30

Lab Sample ID	Client Sample ID	Method Chain	Basis	FinalAmount	InitialTemp	WCP-XYLENE 00020			
LCS 240-286734/1		1010A		70 mL	68 Degrees F	70 mL			
240-82056-P-9 DU		1010A	T	70 mL	51 Degrees F				
240-81698-D-4	WC-FDCON-062817	1010A	T	70 mL	59 Degrees F				
240-81698-D-6	WC-WGEO-062817	1010A	T	70 mL	61 Degrees F				

Batch Notes	
Equipment ID	Whitey

Basis	Basis Description
T	Total/NA

The pound sign (#) in the amount added field denotes that the reagent was used undiluted. All calculations are performed using the stated concentration for this reagent.

GENERAL CHEMISTRY BATCH WORKSHEET

Lab Name: TestAmerica Canton Job No.: 240-81698-1

SDG No.:

Batch Number: 285512 Batch Start Date: 06/30/17 08:30 Batch Analyst: Wu, Patrick

Batch Method: Moisture Batch End Date: 07/03/17 08:35

Lab Sample ID	Client Sample ID	Method Chain	Basis	DishWeight	SampleMassWet	SampleMassDry			
240-81733-A-17 DU		Moisture	T	4.3376 g	7.7818 g	7.6590 g			
240-81698-A-3	WC-FSOIL-062817	Moisture	T	4.3376 g	13.5230 g	12.1143 g			
240-81698-A-5	WC-SGEO-062817	Moisture	T	4.3376 g	13.8736 g	12.7308 g			

Batch Notes	
Balance ID	B047 No Unit
Date samples were placed in the oven	6/30/17
Oven Temp In	103.1 Degrees C
Time samples were place in the oven	16:02
Date samples were removed from oven	7/3/17
Oven Temp Out	103.6 Degrees C
Time Samples were removed from oven	04:30
Oven ID	002
Thermometer ID	Tempguard Box C #6

Basis	Basis Description
T	Total/NA

The pound sign (#) in the amount added field denotes that the reagent was used undiluted. All calculations are performed using the stated concentration for this reagent.

Shipping and Receiving Documents

TestAmerica Baltimore
7526 Connelley Drive
Suite F
Hanover, MD 21076
Phone: 410.766.2516 Fax:

180325

Chain of Custody Record

1.3/C1.3 1.8/C1.8

000514

TestAmerica
THE LEADER IN ENVIRONMENTAL TESTING
TestAmerica Laboratories, Inc.
TAL-8210 (0713)

BALTIMORE

Regulatory Program: ☐ DW ☐ NPDES ☐ RCRA ☐ Other:

Client Contact			
Company Name: TETRA TECH INC.	Project Manager: Tony Apanavage	Site Contact: MULLIS	Date: 6/28/17
Address: 20251 CENTURY BLVD. STE. 200	Tel/Fax: 301-528-3021	Lab Contact: MCFADDEN	Carrier: Fed Ex
City/State/Zip: GERMANTOWN, MD, 20874	Analysis Turnaround Time		
Phone: 301-528-3021	☐ CALENDAR DAYS ☐ WORKING DAYS		
Fax:	TAT if different from Below _____		
Project Name: Waste Characterization Various	☐ 2 weeks STANDARD		
Site: MSA GW/MRC Drilling/GED	☐ 1 week		
PO# Various, ask PM	☐ 2 days		
	☐ 1 day		

COC No: 1 of 1 COCs
Sampler:
For Lab Use Only:
Walk-in Client:
Lab Sampling:
Job / SDG No.:

Sample Identification	Sample Date	Sample Time	Sample Type (C=Comp, G=Grab)	Matrix	# of Cont.	Filtered Sample (Y/N)	Perform MS / MSD (Y/N)	VOCs	PCBs	TCLP Metals	Ignitability	Sample Specific Notes:
TB-062817	6/28/17	—	G	AQ	2			X				
WC-MSAGW-062817		0800		AQ	8			X	X	X	X	
WC-FSOIL-062817		0840		SOIL	3			X	X	X	X	
WC-FDCON-062817		0855		AQ	8			X	X	X	X	*MRC PURGE DEVELOPMENT
WC-SGED-062817		0815		SOIL	3			X	X	X	X	
WC-WGED-062817		0825		AQ	8			X	X	X	X	

6/28/17

240-81698 Chain of Custody

Preservation Used: 1= Ice, 2= HCl; 3= H2SO4; 4=HNO3; 5=NaOH; 6= Other _____

Possible Hazard Identification:
Are any samples from a listed EPA Hazardous Waste? Please List any EPA Waste Codes for the sample in the Comments Section if the lab is to dispose of the sample.
☒ Non-Hazard ☐ Flammable ☐ Skin Irritant ☐ Poison B ☐ Unknown

Sample Disposal (A fee may be assessed if samples are retained longer than 1 month)
☐ Return to Client ☒ Disposal by Lab ☐ Archive for _____ Months

Special Instructions/QC Requirements & Comments: * WASTE CHAR. FOR (1) MSA GW (2) BLOCK F DRILLING (3) BLOCK I GED
* ASK PM for billing

Custody Seals Intact: ☐ Yes ☐ No | Custody Seal No.: | Cooler Temp. (°C): Obs'd: _____ Corr'd: _____ | Therm ID No.: _____

Relinquished by:	Company:	Date/Time:	Received by:	Company:	Date/Time:
	Tetra Tech Inc	6/28/17		TA	6/28/17 1400
Relinquished by:	Company:	Date/Time:	Received by:	Company:	Date/Time:
	TestAmerica	6-28-2017/1600		TAL	06/29/17 920
Relinquished by:	Company:	Date/Time:	Received in Laboratory by:	Company:	Date/Time:

TestAmerica Canton Sample Receipt Form/Narrative **Login # :** 81698
Canton Facility

Client Tetra Tech Site Name MSA Cooler unpacked by: DSO
Cooler Received on 06/29/17 Opened on 06/29/17
FedEx: 1st Grd Exp UPS FAS Clipper Client Drop Off TestAmerica Courier Other

Receipt After-hours: Drop-off Date/Time Storage Location

TestAmerica Cooler # Foam Box Client Cooler Box Other
Packing material used: Bubble Wrap Foam Plastic Bag None Other
COOLANT: Wet Ice Blue Ice Dry Ice Water None

1. Cooler temperature upon receipt ☐ See Multiple Cooler Form
   IR GUN# IR-8 (CF **-0.4** °C) Observed Cooler Temp._____°C Corrected Cooler Temp._____°C
   IR GUN #36 (CF **+0**°C) Observed Cooler Temp._____°C Corrected Cooler Temp._____°C
2. Were custody seals on the outside of the cooler(s)? If Yes Quantity 1 each Yes No
   -Were custody seals on the outside of the cooler(s) signed & dated? Yes No NA
   -Were custody seals on the bottle(s) or bottle kits (LLHg/MeHg)? Yes No
3. Shippers' packing slip attached to the cooler(s)? Yes No
4. Did custody papers accompany the sample(s)? Yes No
5. Were the custody papers relinquished & signed in the appropriate place? Yes No
6. Was/were the person(s) who collected the samples clearly identified on the COC? Yes No
7. Did all bottles arrive in good condition (Unbroken)? Yes No
8. Could all bottle labels be reconciled with the COC? Yes No
9. Were correct bottle(s) used for the test(s) indicated? Yes No
10. Sufficient quantity received to perform indicated analyses? Yes No
11. Are these work share samples? Yes No
    If yes, Questions 11-15 have been checked at the originating laboratory.
11. Were sample(s) at the correct pH upon receipt? Yes No NA pH Strip Lot# **HC697954**
12. Were VOAs on the COC? Yes No
13. Were air bubbles >6 mm in any VOA vials? ● ⬅ Larger than this. Yes No NA
14. Was a VOA trip blank present in the cooler(s)? Trip Blank Lot # Covered Yes No
15. Was a LL Hg or Me Hg trip blank present? _____ Yes No

Contacted PM _____ Date _____ by _____ via Verbal Voice Mail Other

Concerning _____

16. CHAIN OF CUSTODY & SAMPLE DISCREPANCIES Samples processed by:

17. SAMPLE CONDITION

Sample(s) _____ were received after the recommended holding time had expired.
Sample(s) _____ were received in a broken container.
Sample(s) _____ were received with bubble >6 mm in diameter. (Notify PM)

18. SAMPLE PRESERVATION

Sample(s) _____ were further preserved in the laboratory.
Time preserved: _____ Preservative(s) added/Lot number(s): _____.

TestAmerica Multiple Cooler Receipt Form/Narrative **Login # :** 81698
Canton Facility

Cooler #	IR Gun #	Observed Temp °C	Corrected Temp °C	Coolant
Client	36	1.3	1.3	Ice
↓	↓	1.8	1.8	↓