GENERAL DESIGN STANDARDS

1.0 GENERAL

1.1 Description

A. The purpose of this section is to provide general design requirements that apply to all design disciplines and types of project. Refer to Appendix K of these Design Standards for a description of the general scope of design and construction administration services.

B. Specific requirements that apply to a particular design discipline are in the individual sections of these standards.

C. Specific information on products and installation requirements are contained in the Facility Engineering Standards (FES) Construction Specifications and will not be repeated here. Designer shall review the Construction Specifications prior to design.

D. Designers shall be liable for the cost of redesign and design-build contractors shall be liable for additional costs of rework caused by not complying with these requirements.

2.0 DESIGN SERVICES

2.1 Pre-Design

A. The scope of pre-design services will depend on the size and complexity of the project and the amount of information that has been provided by LMSSC in the Statement of Work (SOW).

B. Verify that layouts and design solutions suggested by LMSSC will accommodate the proposed functions and that they are in compliance with applicable codes and FES Design Standards. Determine what upgrades to existing facilities and utility systems will be needed to meet code and reliably support proposed uses.

C. Perform pre-design services to include:

1. Validate stated functional requirements. Provide or complete the program of spaces, listing the function, size, occupant count, utilities, equipment and other features of each space.

2. Compile information and perform field investigation to provide a complete list of equipment as needed for design, including dimensions, weight, electrical information, heat loads, required utility connections, NRTL certification requirements and other features. LMSSC may provide a complete or partial list of equipment, which shall be verified and completed by the designer.

3. Determine utility, floor loading and other requirements to accommodate equipment and functions.

4. Determine phasing of the design and construction to support need dates and minimize disruption in occupied facilities.

5. Identify Hazardous or Regulated Materials, their use, quantities and storage locations and impact to building occupancy ratings.

6. Verify the existing facility layout and determine existing building conditions per Document Research and Field Investigation below.

7. When new equipment is located away from the project area, such as on roofs, verify that the access path, including stairs, ladders, hatches , crossovers and other access elements are compliant with Building Code and OSHA requirements, have proper clearances and fall protection, and are structurally sound and in good repair. Include required repairs, modifications and upgrades in the design.

8. As approved by LMSSC, retain contractor services to assess the condition of utilities and equipment serving the area, and recommend modifications and repairs.

9. Perform underground utility survey for any project requiring excavation. Submit drawings indicating as-built utility conditions.

D. All pre-design activities shall be performed in consultation with the LMSSC project team and subject matter experts.

E. Submit pre-design documents and drawings to LMSSC for approval prior to proceeding with schematic design.

2.2 Schematic Design Phase (30% Design)

A. Develop alternate layouts in consultation with the LMSSC design team for approval.

B. Provide deliverables per the Design Standards for each design.

2.3 Design Development Phase (60% Design)

A. Develop design solutions in consultation with LMSSC and design-build vendors designated by LMSSC. Explore alternate design solutions as directed by LMSSC. Facilitate meetings with LMSSC subject matter experts as required to fully determine and clarify design requirements.

B. Include designs and equipment furnished by LMSSC in the construction documents and coordinate with other work.

C. Design specific equipment and utility systems called out in the Statement of Work.

D. Identify and develop cost effective design alternatives that will provide the same or better quality or lower maintenance costs.

E. Review selection of equipment with LMSSC Maintenance to minimize spare parts required in stock.

F. Collaborate with equipment manufacturer to identify facility and special installation requirements.

G. Provide a sampling map for any areas that may need hazardous material abatement (e.g. asbestos, lead) and forward to LMSSC to conduct sampling and testing.

2.4 Construction Documentation Phase (90% Design)

A. After approval of the design approach, provide complete documentation as required for permitting, bidding, construction and record documentation.

B. Include hazardous material (e.g. asbestos, lead) sampling results on drawings.

2.5 Design Completion Phase (100% Design)

A. Submit completed documents for final approval.

3.0 DESIGN CONTROLS

3.1 Facility Engineering Standards

A. Lockheed Martin Facility Engineering Construction Specifications apply to all projects and take precedence over specifications appearing on drawings, unless specifically called out as modifications to the Construction Specifications and approved by LMSSC.

B. LMSSC design and construction standards are intended to be consistent with LEED silver requirements. Product selections made by the A/E shall be consistent with LEED silver requirements.

C. Facility Engineering Standards are periodically revised to reflect changes in design practices, technology and lessons learned on projects. The latest revision of each section is available on line at the Lockheed Martin Space Systems website, along with a log showing revision issue dates. Consult the revision log prior to issuing construction documents so that the design complies with latest standard.

3.2 Engineering Review

A. Design review will be provided by the LMSSC Architects, Engineers and Subject Matter Expert (SME) assigned to the project. At each design submittal, and as requested by the A/E or directed by LMSSC.

B. Early in the design phase, the appropriate A/E design disciplines shall meet with the following LMSSC Subject Matter Expert (SME) groups to validate the proposed design approach. Document agreements and submit to the PM for approval prior to proceeding.

1. Mechanical Review Board (MRB), comprised of facility engineers and maintenance SMEs, to review HVAC concepts. The HVAC concept shall be presented to and approved by the MRB prior to undertaking any design work, and as the design develops.

2. Electrical Review Board (ERB), comprised of facility engineers and maintenance SMEs, to review electrical concepts.

3. Architectural Review Board (ARB) to obtain approval of exterior building appearance, equipment screening and interior finishes. Note that the ARB reviews appearance only and does not comment on layout, detailing or other technical issues. Refer to Appendix F of this standard, Architectural Review Board (ARB) Policies and Procedures.

C. Meeting with SME groups is not intended to be a detailed technical review.

3.3 Coordination of New Work with Existing Construction

A. Several LMSSC buildings are large and complex, with various building divisions and multiple floor levels and mezzanines. PDF maps of each floor level of each building are readily available on line on the internal website. As a first step in the design process, project designers shall obtain a full set of PDF maps of all floor levels of the building where their project is located, and determine what building areas are above, below and adjacent to the project area.

B. After determining building configuration and adjacent areas, research available drawings using the LMSSC document management system. Obtain copies of record drawings from the Facility CAD Group which show the project area or contain information pertaining to the project or the project area.

C. Several major facilities have been modeled in 3D, including buildings 076, 153, 156, 171, 158 and 159. Although these models may not show the most recent facility changes, they are an excellent resource for determining overall building configuration, heights of floors, and depth of major structural elements. For projects in these buildings, request the Revit file and use it as a reference.

D. LMSSC does not warrant the accuracy of record drawings. Conditions shown on the record drawings shall be field verified. Revisions to the construction documents caused by conflicts that could have been prevented by field surveys and record drawing verification shall be at the A/E's expense.

E. Whenever new construction is added to existing structures, for example, new duct runs and risers in existing buildings, carefully review drawings to determine interferences with existing construction. Identify all floors above and below the level of work, especially where these will be penetrated by new ducts and utilities. Determine the construction, fire rating, security function, and other features of all walls and floors that will be penetrated, or that form project perimeters.

F. Prior to starting the construction documents, perform field investigation to verify information shown on record drawings for the project area, and as required determining pertinent "as-built" conditions. This includes field surveys of attic/plenum spaces and roofs as applicable to the project. Measure locations of walls, utilities and other features that are intended to remain and produce dimensionally accurate plans. Produce new as-built drawings where existing construction is not shown on record drawings.

G. Where field verification is not possible, conditions shown on the record drawings that could result in design conflicts, such as seismic bracing within a wall, shall be shown on construction documents and taken into account in the design.

H. In order to improve coordination with floors above and below the level of work, indicate the floor elevation in every floor plan of each engineering discipline. The notation shall be placed in the northeast bay of the floor area shown on the plan. The ground floor shall be indicated as level 0'-0", with other floor elevations indicating the actual distance above or below this reference elevation.

I. Provide a section view of ducts, shafts and major risers that penetrate floors.

J. Where drawings show any vertical section or partial section through new or existing construction, show the floor above and the floor below to actual scale. Every floor level shown shall include the floor elevation, using standard level notation per the Architectural Drawing Symbols.

4.0 BUILDING AND SITE DESIGN CRITERIA

4.1 Appearance

A. The Architectural Design Standards contain specific guidance for Architects in designing buildings. This article deals with the coordination and appearance of utility elements and miscellaneous elements that may be installed either with the original construction or added later.

B. All exterior modifications to buildings and sites shall be presented to the Architectural Review Board.

C. All visible elements shall be consistent with the desired appearance of the building. Concern for functionality must be combined with an equal concern for appearance. At a minimum, this requires avoiding unsightly or inappropriate elements.

D. The collection of visible elements on the exterior and interior of buildings shall be coordinated in the design and carefully controlled during construction to avoid a haphazard appearance.

E. Utility boxes, pipes, conduits, ducts and their supports shall be concealed by construction, screened, recessed or placed in inconspicuous locations. Pipes, conduits and cables feeding exposed controls, panels and other exposed items must be routed within or behind walls so they are fully concealed.

F. Bollards, lights, signs, switches, controls and other visible exterior elements that cannot be screened shall be placed in visually appropriate locations, grouped, aligned and co-located to produce a neat and orderly appearance. This requires careful coordination between Mechanical, Electrical, Plumbing, Fire Protection, Irrigation and other subcontractors.

G. Light fixtures and other visible elements shall be selected for appearance as well as functionality, and shall be reviewed with the design Architect and the Architectural Review Board.

4.2 Accessibility

A. Facilities shall accommodate the full range of mobility, sensory and mental impairments, whether or not identified as disabilities, including impairments caused by injury and age. Appropriate size and space shall be provided for

approach, reach, manipulation, and use regardless of user's body size, posture, or mobility.

B. The design shall minimize hazards to personnel including the adverse consequences of accidental or unintended actions

C. Designs shall comply with the letter and spirit of accessibility regulations; however it should be recognized that some employees are physically challenged even by designs that meet codes and standards.

D. Pay special attention to accessible installation heights of switches and controls that may be used by building occupants. This includes controls in laboratory and production areas.

E. Provide automatic door openers at the building entry that provides most convenient access to the project area when the cost of openers plus other required ADA modifications will be less than 15% of the project budget.

4.3 Sustainable Design

A. Sustainable design shall be incorporated into all projects. All new buildings shall be U.S. Green Building Council LEED certified. All modifications and renovations to site, buildings and structures shall be LEED Silver equivalent

4.4 Upgrading of Existing Ventilation Systems

A. During renovations to restrooms and breakrooms, the ventilation system shall be upgraded to meet requirements of Title 24 and other applicable codes.

4.5 Construction on Roofs

A. Plans shall indicate removal of abandoned equipment, sleepers, supports and other abandoned construction within 25 feet of the area of any significant work performed on a roof, such as installation of new mechanical units. This applies to items that have been abandoned by previous projects as well as supports for equipment removed on the current project. Existing steel support structures connected to building structural members may remain if they can be used to support equipment in future.

B. Wooden crossovers within 25 feet of the area of any significant work shall be replaced with aluminum crossovers. Review access to the work area with the project team and provide additional crossovers where they are needed to access new and existing equipment.

C. No exposed wood construction, supports or blocking is allowed on roofs.

D. No exposed fasteners may penetrate the roof membrane, for example, items that are bolted to the structure.

E. When roofing occurs at sleeper locations, sleepers that are not bolted to the roof shall be raised and the coating applied beneath the sleeper. Bolted sleepers may have roof coating applied over them, but metal cap flashings shall be provided.

5.0 MAINTAINABILITY

5.1 General

A. Maintainability is the relative ease and economy of time and resources with which an item can be maintained, repaired or replaced using prescribed procedures, assigned personnel and available tools. Maintainability shall be a critical concern in the design and construction of all projects.

B. All material and equipment selected for a project shall have a proven high degree of reliability and shall meet or exceed the requirements set forth in the scope of work and individual sections of the Design Standards and Construction Specifications.

C. Select material and equipment whose performance will not degrade over the expected life cycle of the building or equipment with prescribed maintenance.

D. Equipment shall be readily maintainable and repairable by Maintenance technicians with standard training and without the use of special tools.

E. Provide isolation valves and switches to allow equipment to be repaired without impacting operations.

5.2 Access to equipment

A. Equipment installations shall be designed and executed so as to be easily accessible and repairable without moving office area personal, their furnishings, conduit, pipes, ductwork, ceiling grids or other items.

B. Provide equipment such as boilers, chillers, air handlers and air compressors with sufficient space for removal of tubes, motors and other parts without disassembling other infrastructure systems or moving walls and equipment.

C. Equipment and equipment installations shall be designed to insure and enhance access, maintainability and serviceability without endangering or posing a threat to service technicians. Potential hazards (utilities, latent kinetic energy) shall be easily recognizable, labeled and easily disabled. Provide motion detector controlled lighting at interior equipment locations so that portable work lights are not required.

D. Provide sufficient space for personnel to access to interior equipment, free of all

E. Provide stairs, crossovers, catwalks and other safe and convenient means of access for technicians with equipment and tools to safely test, maintain repair and replace equipment and components at roofs, elevated locations, pits, attics equipment rooms, closets and other spaces where equipment is installed.

F. Access to elevated locations shall be provided by standard industrial stairs where space is available, or by alternating tread stairs or spiral stairs where space is constrained. Vertical ladders or ships ladders shall not be used without the specific approval of Maintenance and Safety Departments. The detailed design of all vertical access components shall be reviewed by in-house Architects and Safety.

G. Provide permanent fall protection systems at new elevated locations where edges are not fully guarded. Provide guards where equipment, valves, switches and other maintainable items are installed within ten feet of unguarded locations.

H. When existing buildings are re-roofed, install permanent fall protection systems as part of the work. Install standard manufactured roof hatch guardrails at new roof hatches and retrofit to existing roof hatches when equipment is added to roofs.

I. Ceiling access hatches shall be provided with fold-down ladders. Where equipment is proposed for installation in accessible ceiling spaces, Maintenance personnel shall be consulted to determine appropriate heights and locations of equipment, gauges valves, switches and connections.

6.0 FACILITY RISK

6.1 General

A. Identify and eliminate risks to operations and personnel that may be posed by building and site design, material and component selection and installation methods. This applies to systems and components as they age through their lifecycle as well as when they are first installed.

B. Areas housing high value components and operations shall be given special attention. Consult with the Risk Management Group to identify facility risks to critical hardware and operations and recommended mitigations. Consult with Responsible Area Superintendents (RAS) during planning and design.

6.2 Liquid Intrusion

A. Design facilities to minimize risk of leaks, especially at critical areas where high-value components are stored, assembled or tested.

B. General

1. Consider locating mechanical equipment in dedicated pods or areas where leaking and vibration will not affect other areas. Where practical, do not locate any equipment on roofs.

2. Avoid locating occupied areas below grade, including storage areas. Provide sumps and ejector pumps in below-grade floors to eliminate flooding.

3. Provide leak detection per Section 20 in all utility areas and unoccupied areas that are located above other functions.

4. Minimize roof penetrations that may be sources of future leakage.

5. Consider penthouse terminations of stairs and ladders instead of roof hatches.

6. Take particular care in diverting rainwater and providing flashing and counter-flashing at wall penetrations.

C. Critical Areas

1. These requirements apply to the design of facilities that contain critical areas housing high value components and operations, and when a critical area is to be located in an existing facility.

2. Do not locate piping, drain lines or mechanical units that contain liquid above critical areas. Avoid piping in walls.

3. Consider use of dry-pipe sprinkler systems.

4. Avoid roof penetrations of pipes, ducts, conduits, hatches, supports and other items. Do not locate any equipment on roof above or in the vicinity of critical areas.

5. Insure positive roof drainage and locate roof drains away from critical areas.

6. Do not locate utility rooms, storage rooms or penthouses above critical areas. If such rooms above critical areas are unavoidable or are pre-existing, provide retention curbs at perimeter of room and at penetrations, seal floors liquid tight, provide sumps and drains to eliminate the possibility of standing water and provide leak detection per Design Standard Section 20 Facility Maintenance Alarm System.

D. Do not locate liquid piping or liquid containing mechanical equipment above electrical rooms, telephone rooms, and other rooms housing sensitive facility infrastructure.

END OF SECTION

SECTION 1
CIVIL DESIGN STANDARDS

1.1 GENERAL

1.1.1 Correlation and Coordination

A. This section provides standards for the Civil design work. These design standards shall correlate with the current edition of Lockheed Martin Missiles & Space (LMMS) Facility Engineering Standards (FES), Construction Specifications, Volumes I through IV, and other relevant sections of this Facility Design Standards. Where applicable, the Engineering Construction Details delineated in the FES Construction Specifications shall be used for compatibility to LMMS existing facilities design.

B. The Civil design work shall be designated under the current Construction Specifications Institute (CSI) format.

C. The design shall be fully coordinated with other related architectural and engineering disciplines to eliminate conflicts and omissions, and to ensure that the total project requirements are met. Prudent judgment must be exercised in collaborating design solutions with LMMS organizations and personnel.

D. All design/construction drawings shall follow LMMS drawing procedures and standards, unless specifically described otherwise in specific Sections of this Facility Design Standards. Refer to Section 11, Drawing Procedures for all drawing requirements.

1.1.2 Design Philosophy

The design shall be done in a manner to assure that the maximum benefit is obtained for the costs expended. Safety and reliability shall not be compromised as a cost saving measure. The methods of analysis and design shall follow established principles of professional engineering practices. Value Engineering is encouraged during the development of the design work.

1.1.3 Codes and Standards

Design work shall comply with the current adopted edition of all applicable city, county, state, and federal codes and standards. In addition, the current adopted edition of the following codes, standards and publications, are considered as the governing references to this section. Applicable recommendations of related trade and professional associations not listed here shall also be considered.

California Department of Transportation (CALTrans)
American Association of State Highway and Transportation Officials (AASHTO)
American Concrete Institute (ACI)
American Institute of Steel Construction (AISC)
American Iron and Steel Institute (AISI)
American National Standards Institute (ANSI)

American Railway Engineering Association (AREA)
American Society for Testing and Materials (ASTM)
American Society of Civil Engineers (ASCE)
American Water Works Association (AWWA)
American Institute of Architects (AIA)
American Society of Landscape Architects (ASLA)
American Society of Mechanical Engineers (ASME)
Federal Highway Administration (FHWA)
Illuminating Engineers Society (IES)
International Municipal Signal Association (IMSA)
Institute of Traffic Engineers (ITE)
National Fire Protection Association (NFPA)
Public Utilities Commission (PUC)
Underwriters Laboratories (UL)
California Code of Regulations
Local Municipal Code
LMMS Plant 1 Detailed Site Plan - Design Guidelines

1.1.4 Calculations

A. Relevant calculations are required to substantiate the design. Calculations shall be submitted in compliance with all sections of this design standards and will be prepared and “wet sealed” by a Civil Engineer registered in the State of California.

B. Calculations are also required by any governing agencies in order to obtain construction permits shall be submitted to the agency; such as retaining walls, concrete slabs, chain link fences with slats, etc.

1.1.5 Design Review Process (Requirements & Deliverables at Each Design Phase)

A. 0% Pre-Design Concept

1. Assumptions and Constraints
2. Schedule of Deliverables
3. Schedule of Pre-purchased Equipment
4. Design Concept - Site Team will provide design methodology to pursue.
5. Civil Requirements

B. 30% Design Review Requirements

1. Include all comments and requirements from all previous reviews.
2. Basic Preliminary Drawings
   a. Site Pan
   b. Existing Site Plan
   c. Civil Demo Plan
   d. Grading Plan

e. Paving Plan

f. Utility Plan

g. Erosion and Sediment Control Plan and Details

3. Completed Site Investigation by Design Engineer

4. Proposed Utility Connections (Point of Connection)

5. Storm water control best management practices (BMP Layout).

6. Preliminary Schedule

7. LEED Checklist, if applicable

8. Identify any preliminary meetings with city.

9. Identify code, government, and municipal requirements.

10. Identify supplemental specs.

11. Building Code & Standards Analysis

12. Structural system descriptions preliminary

13. Structural grid layout

14. Preliminary foundation descriptions

15. Outline site servicing requirements

16. Existing topographical layout

C. 60% Design Review Requirements

1. Include all comments and requirements from all previous reviews.

2. Updated drawings showing incorporated elements from the Site Team review.

3. Updated Schedule

4. Parking Plan and Turning Analysis

5. Identify impacts to roadways

6. Identify parking and layout storage areas

7. Supplemental Specification Requirements

8. Specifications shall be substantially complete.

9. Sections covering all mechanical equipment and devices.

10. Design scope of work shall be locked in.

D. 90% Design Review Requirements

1. Include all comments and requirements from all previous reviews.

2. Any changes to the project requirements at this stage must be made by Lockheed Martin.

3. The effort between the 60% and the 90% submittal should be primarily drafting and issue resolution.

4. Final proposed Point of Connection matrix shall be completed and submitted to Lockheed Martin. Information shall highlight all service and utility outages required and known areas impacted.

5. Contractor shall submit a comprehensive risk plan and formal cost proposal

6. Order long lead items

7. Erosion and sediment control plan

8. Updated drawings showing incorporated elements from the Site Team review

9. List of elements the Site Team requested that were changed or not incorporated (to be approved)

10. Updated Schedule

E. 100% Complete/ Issued for Construction

1. Submit a complete full size set of project design documents and specifications for final approval and sign off.

2. Submit 100% package electronically per established procedure.

3. Provide bidding and permitting documents as required.

4. At the end of the bid period update the drawings and specifications to include all Addenda. These documents shall be the contract set. Submit 8 half size sets to Lockheed Martin Team.

F. After Issued for Construction

1. Any design changes, substitutions, and modifications must be submitted to the Site team for approval.

1.2 PROJECT SURVEYING

1.2.1 Site Survey and Map

A. A new topographic survey, drawn to a 100 scale, of LMMS Plant 1 will be available for the use by the Designer. The database is available in either magnetic tapes or DXF, PC disks. From this map and the survey of the site, a plan shall be drawn to a 40 scale. This shall include horizontal and vertical data on adjacent buildings, streets, drainage structures, utilities, landscaping and fencing. Contours will be included on half foot contours interval.

B. The project shall be vertically and horizontally “tied” to existing LMMS Plant 1 monuments. The bearing and horizontal distance must be shown.

C. A center line shall be calculated for the project street and all intersecting streets. A monument will be placed in the field at all center line street intersections and changes on curve directions. The monuments will be coordinated to the LMMS system. Coordinates and elevations will be shown on plans and monument brass plates if established.

D. Center line stations and elevations shall be plotted on the improvement plans (plans and profile), which will also include the existing and proposed monuments.

E. Center line and offset stations with proposed elevations must be either painted or staked in field.

F. The profile stations shall be at 25 foot intervals for street design, and 10 feet for intersection design. All utility inverts will be to the nearest 0.05 foot.

G. Only the LMMS Plant 1 datum (United States Geological Survey Monuments) will be used. USGS Monuments (or LMMS Temporary Bench Marks (TBMs). Refer to LMMS Contour Maps latest edition.

H. A TBM shall be established in the field at both ends of the project and at a minimum of 1,000 foot intervals within the project.

1.2.2 Survey Data

The following minimum survey data must be shown on the improvement plans:

A. Location of all utilities (field verification and referred to the LMMS coordinates and datum).

B. Flow line elevations of all existing storm and sanitary lines.

C. One half foot contours on the plan view.

D. Monuments referenced to both the LMMS and State of California coordinate systems.

E. Street lines including all curvatures referenced to the nearest LMMS monuments.

F. Street lines and monument ties of street to conform to the current edition of the LMMS Plant 1 Site Master Plan.

G. Verify and show utility and/or other easements that exist within the limits of work.

H. All proposed and existing utilities must be shown on the profile (location and elevations) of the improvement plans.

I. All power sources (electrical, waste, etc.) related to the design of this project shall be shown.

1.2.3 Survey Existing Utilities and Maps

A. Drawings and/or CADAM tapes or DXF disks will be supplied showing existing utilities in conceptual form. As-built drawings will also be made available.

B. Verification of all existing utilities with field surveys and/or radio detection/metal detection instruments will be required.

1.2.4 Survey of the Existing Electrical System

A survey of the existing electrical lighting system shall be conducted for the purpose of eliminating unused services, combining control panels and transformers into common systems, and recorded on an electrical drawing(s). Refer to Section 5, Electrical Design Standards for additional criteria.

1.3 LANDSCAPING

1.3.1 General

A. The current edition of the LMMS Plant 1 Site Master Plan depicting types of landscaping species, areas to be landscaped, and landscaping architecture philosophy shall be used as a general guide. The Designer shall also confer with the City of Sunnyvale and/or other governing agencies to verify landscape requirements.

B. The City Planning Department requires landscaping and irrigation for all new LMMS buildings.

C. Landscaping related to parking areas shall not be less than 5 percent of the total paved area.

D. The current edition of the LMMS Plant 1 Site Master Plan also recommends landscaping in other areas, such as street medians, walkways, green-belt areas, etc. The Designer will tabulate the following on the landscaping sheet(s) of the improvement plans:

1. Existing landscaping area (sq. ft.)
2. Proposed landscaping area (sq. ft.)
3. Net change

1.3.2 General Design Criteria

A. Avoid plantings requiring high levels of maintenance such as grass. Low maintenance, deep rooting plants that flourish in this area are required.

B. Special care should be made in locating and selecting plants to avoid damage to sewers, pavements, sidewalks and other improvements.

C. LMMS Type “1” curb delineated in LMMS Engineering Construction Details in FES Construction Specifications, Volume 1, Site Development and Structural, is required whenever landscaping adjoins parking or driveways. Extruded curbs are not allowed.

D. Rocked areas are not acceptable. Native and imported topsoil shall be tested for suitability. Refer to FES Construction Specifications, Volume 1, Section 02920,

Landscape Soil Preparations and Materials. Suitable soils shall be specified where applicable.

E. For security reasons, no trees should be planted within 6 feet of a security fence.

F. All landscaping shall have piped water lines and sprinkler or shrub heads. Bubblers shall be used in appropriate areas.

G. Automatic irrigation systems will be designed for all areas of landscaping. Water source with appropriate valves and routing will be shown on plans. The Designer will provide typewritten sheet of calculations of the main line, flow rates and pressure for each zone of sprinklers. Zone and valves on the calculation sheet are to be identified in coordination with zones and valve on the irrigation plan. Refer to FES Construction Specifications, Volume 1, Section 02910, Landscape Irrigation Systems.

H. Submit calculations listing the hydraulics of the irrigation system, water source, etc.

1.3.3 Landscaping Specifications

Refer to FES Construction Specifications, Volume 1, Sections 02910, 02920, 02950 and 02970 for landscaping construction specifications.

1.4 STREET AND PARKING LOT LIGHTING

1.4.1 Design Submittals

Design of the street and parking lot lighting shall include the submittal of all calculations, intensity contours, etc. An evaluation report shall be submitted for the various fixture alternates.

1.4.2 Design Criteria

A.

Lot		Street	
Foot Candle	0.5	Foot Candle	0.5
Dekalux	0.5	Dekalux	0.5
Light-Dark ratio		6 to 1	

Refer to Section 5, Electrical Design Standards for additional criteria.

B. Provide any additional luminaire data, charts or drawings required by the local municipal government for permitting processes.

1.4.3 Street and Parking Lot Luminaries

A. Typical Street Lighting Luminaries for City of Sunnyvale

General Electric Cat. No. MZAC200135 A16MC31
480 V with 200 watt High Pressure Sodium Lamp
Standard Finish

B. Typical Parking Lot Luminaire

1. Area light, Type “K”, pole mounted, 25 foot pole, 200 watt MPE, KIM Lighting, 582-144/480/DBE/A-85/PF 2K-2ET/Type V distribution.

2. Area light, Type “L”, pole mounted, 16 foot pole, 250 watt, KIM Lighting, 5AT-144/480/DBE/A-85/PFQK-25/TYPE I distribution.

C. Typical Building Entrance

Area lighting Type “CC” or “M”, pole mounted, 16 foot pole, 250 watt, KIM Lighting, 1A/CTS 600/250 HPS 450, DBE/A-25/PBTS 16-6188.

High Pressure Sodium lamps with a dark bronze anodized finish.

1.5 RELATED DESIGN REQUIREMENTS

1.5.1 Security Fencing and Plant Entrances

LMMS will supply the type and location of proposed guard houses, fencing, and directional information signs. Design and details of vehicular pedestrian movements are required for all LMMS plant entrances. If applicable, include the following:

Guard House Foundations
Security Fencing
Vehicular Turnarounds
Pedestrian Turnstiles

1.5.2 Fire Protection

A review of the existing fire protection system (including hydrants, valves and fire mains) shall be conducted. Design of the required changes/additions shall conform with the local City and LMMS requirements. Refer to Section 8, Fire Protection Design Standards.

1.5.3 General Construction Fire Systems Design

The design of the fire pipe system shall be calculated with an accepted engineering method such as the “Hardy Cross” and will include all friction losses and hydrant calculations. Submittal of the calculations and/or a computer print-out is required.

1.5.4 Excavation and Backfill

A. The following minimum depths of cover shall be provided for in the design:

Sanitary Sewer	3 ft. - 0 in.
Storm Sewer	3 ft. - 0 in.
Industrial Waste	3 ft. - 0 in.
Fire Main	3 ft. - 0 in.
Chilled and Hot Water	3 ft. - 0 in.
Natural Gas	3 ft. - 0 in.
Electrical Duct Banks (Red Conc.)	3 ft. - 0 in.
Communication Duct Bank (Red Conc.)	3 ft. - 0 in.

B. All non-metallic pipings shall have metallic trace wrapped around line to provide a positive means for detecting the location.

1.5.5 Earthwork

A. Unless otherwise directed or recommended by the project soil report, remove all black clay when present within building, street, or utility construction area and replace with imported structural fill material. Compact structural backfill to 95% relative compaction.

B. Strip all other areas to a depth of not less than 12 inches.

1.5.6 Soil Survey Testing

A soil engineering firm, if required by the project, shall provide all soils laboratory testing and interpret the results for design and construction. Boring logs and water surfaces will be shown on the construction drawings. All structural designs shall be based on these soil reports.

1.5.7 Trash Enclosure

New exterior trash enclosures must have location, elevations, and details or an adequate description for submittal to the LMMS Architectural Review Board (ARB) for review during design development and to the City Planning Department during plan check. The enclosures shall be fully screened from public view by masonry, slatted chain link or solid wood fencing of at least 8 feet in height. Enclosures located within 10 feet of buildings shall be provided with fire sprinklers.

1.5.8 Bike Rack and Van Pool Parking

LMMS and the City Planning Department will evaluate the need on a project by project basis.

1.5.9 Minimum Floor Elevations

The minimum floor elevation for any building computed on USGS datum, shall be the City of Sunnyvale FEMA Flood Plain Elevation which is currently 8.5 feet.

1.5.10 Curb and Gutters

Where drainage flow is against curb, the Type “2” Curb and Gutter shall be used. All other curbs shall be vertical Type “1”. Refer to the LMMS Engineering Construction Details in FES Construction Specifications, Volume 1.

1.5.11 Sidewalks

Sidewalks shall be 5 feet in width and shall be installed with handicapped ramps where required. Ramps shall have handrails if slope exceeds 1 foot in 15.

1.5.12 Traffic Control Signalization

The City of Sunnyvale Standard Specifications and Details, Section 10-42, shall be used for a guide to design traffic signals.

1.6 PARKING LOT DESIGN

1.6.1 Pedestrian Crossing

All pedestrian crossing shall be located where shown on the current edition of the LMMS Plant 1 Site Master Plan and any additional crossings shall be approved by the Civil Engineer of LMMS Facility Engineering organization prior to final design. Pedestrian crossings will be at street intersections.

1.6.2 Parking Lot Configuration

The traffic movement and parking stall arrangement will be designed to the most efficient level considering such factors as:

Access roads
Landscaping
Pedestrian crossings
Fire lanes

1.6.3 Parking Lot Statistics

A. A calculation of the following statistics shall be completed and tabulated on the improvement plans.

   Number of existing parking stalls
   Number of proposed parking stalls
   Number of proposed handicapped stalls

B. Work with the LMMS Civil Engineer to arrive at an acceptable number for ratio between building square footage and proposed parking stalls.

1.6.4 Handicapped Parking

The design shall provide the required amount of handicapped stalls, ramps, signs, symbols, etc., to satisfy the requirements of Title 24 of the California Code of Regulations and/or the local City Standards.

1.6.5 Reserved Parking

Coordinate requirements for van pool and car pool parking with the Reserved Parking Program Coordinator of LMMS Facility Engineering organization.

1.7 GENERAL STREET DESIGN

Streets and intersections within the project limits shall be designed to a high quality standard. Refer to Section 11, Drawing Procedures, for detailed criteria and drafting standards.

1.7.1 Geometric

A. Streets with horizontal and vertical curves shall be designed using the latest AASHTO criteria such as:

Sight triangles
Truck turning radii
Traffic turning lanes
Striping, signing requirements

B. Street curvatures shall be slightly super-elevated. All roads shall be crowned except at intersections.

1.7.2 Street Classifications

Refer to the current edition of the LMMS Plant 1 Site Master Plan for typical sections and classification of streets.

1.7.3 Street Sections

A. The minimum geometric design data for streets shall be:

	Number of Lanes	Lane Width (feet)	Shoulder Width (feet)
Main entrance road	4	12	
Plant road two-way traffic	2	12	4
Plant road one-way traffic	1	14	4

B. The street geometric designs will include such items as:

Traffic Intersection Channelization
Traffic Signalization-Synchronization
State of California Signing and Pavement Markings Standards
Street and Lot Lighting Controls
Geometric Factors
Sight Triangles
Horizontal and Vertical Curves
Intersection Grade Designs
Truck and Transport Turning Movements
Fire Lanes and Fire Truck Turnarounds
Landscaping

1.7.4 Traffic

A. The current edition of the LMMS Plant 1 Site Master Plan will be referred to for such items as: traffic volumes, intersection locations and configurations, cross section of streets, pedestrian walkways, etc.

B. The latest edition of the following manuals establish the guidelines for traffic and street geometric design. When differences occur between these manuals and this Design Standards, this standards shall govern.

American Association of State Highway and Transportation Officials. CALTrans Design Manual Institute of Traffic Engineering Handbook.

C. The intent is to design all walkways, pedestrian paths and bicycle paths to a safe and efficient standard and enable LMMS to obtain permits from governing agencies such as CALTrans and/or the local cities.

1.7.5 Construction Detour Plan

A detour plan shall be submitted, if required by the project, to move LMMS traffic and busing service in an efficient and safe manner. This plan will be on a separate drawing showing the detail for temporary pavement markings, signing, barricades, etc.

1.7.6 Turning

The minimum turning radius for roads shall be as follows:

Pavement edge	50 feet
For special transport	85 feet

Note: All turning movements will be investigated with CALTrans turning templates.

1.7.7 Design Speed

A. Major streets

45 miles per hour design and 25 miles per hour posted.

This speed may be reduced or increased due to the character of site or for economic considerations.

B. Internal streets

15 miles per hour (example: secure corridor, LMMS Plant 1).

1.7.8 Horizontal Curves

A. The minimum radius of curve to be used on major streets is 1,150 feet. It may be necessary in special cases to reduce this standard. However, any reduction in standard shall be approved by the LMMS Civil Engineer.

B. Compound curves and broken back curves should be avoided, particularly when a simple curve can be obtained at minimum extra costs.

C. Reversing curves without an intervening tangent will not be permitted. Severe physical restrictions may dictate the use of curves in opposite directions with a short intervening tangent. In such cases, the minimum length of tangent should be 400 feet.

D. Curves on street shall be super-elevated in order to counteract the effect of centrifugal force acting on a moving vehicle.

1.7.9 Grades

Streets shall be designed to the preferred range of grades from 2% to 3%. Vertical curves should be used where the change in the rate of grade exceeds the maximum allowable grade break on center line of 0.5%.

1.7.10 Intersections

Street intersections will be constructed of full depth asphaltic concrete if they meet the following qualifications:

All foreseeable underground systems in place by time of construction.
Complete intersection is being designed to the ultimate line and grade.

1.7.11 Crown

The crown is defined as the difference in elevation between the center line of the roadway and the gutter flow lines. Major streets should be designed with a 1.5% crown where there is no median. When there is a median, the median gutter shall be 9-3/4 inches above the flow line of the outer gutter.

1.7.12 Tilt Section

In locations where existing improvements would require excessive excavation or embankment, or some unusual design conditions are encountered, the Designer should consider a tilt section. Cross slopes up to 5% have been used on secondary highways.

1.7.13 Width

The standard width of a median is 14 feet between curb. At left turn pockets the median is reduced to 4 feet.

1.7.14 Pavement

A. LMMS Plant streets for general use and parking area shall be Asphaltic Concrete (AC). Walkways, sidewalks, truck loading and other specified areas shall be paved with concrete paving.

B. Primary streets shall be designed considering Type “1” or Type “2” revised sections. Secondary streets shall be designed considering Type “3” or Type “4” sections as shown in the LMMS Engineering Construction Details in FES Construction Specifications Volume I, or unless an alternative design is provided by the soils engineer.

C. When alternate sections are required, the following calculations, using a minimum of three sections, shall be submitted for LMMS review and approval:

Full depth, AC
AC with base
AC with treated base (lime, etc.)

D. An analysis of existing problems concerning sub-base material (blue material) and the static water surfaces must be included in the calculations with a recommended solution.

E. An AASHTO-H20 truck loading and a 20 year design cycle shall be used.

F. A sand blanket shall not be used in any type of sections. If a 95% compaction effort cannot be obtained on the natural subgrade, a geotextile material will be specified.

G. The CALTrans or the Asphalt Institute method for flexible pavement design shall be utilized. Aggregate base “R” value = 78 minimum. Aggregate sub-base “R” value = 50 minimum. A traffic TI = 10.

1.7.15 Street Intersections

A. All intersections will intersect at 90 degrees. Concrete curb channelizations shall be incorporated with traffic lights (if applicable) to control traffic volumes.

B. Horizontal and vertical curve data shall be shown on the improvement plans at elevation grids every 25 feet.

C. All pedestrian crossings shall be at intersections.

D. All crosswalks shall be 12 inch wide white strips, per local City standards.

E. All driveways shall be 150 feet from the beginning of the intersection. A sight triangle shall be established permanently with 75 foot legs, and no structure or landscaping shall exist above 30 inches for each quadrant.

F. A stop sign and street name sign will be installed at each quadrant of the intersection per State of California Manual on Uniform Traffic Control Devices.

1.7.16 Transitions

Pavement transitions are required on current edition of the site street master plan where a lane of traffic is forced to change direction abruptly.

1.7.17 Medians

Medians are desirable on all streets and should be constructed wherever the width of roadway is adequate.

1.7.18 Curbs and Gutters

Concrete curb gutter is desirable on all projects for drainage and traffic control.

1.7.19 Sidewalks

A. Existing public sidewalk is either saved or replaced in the appropriate location, with a 4 inch minimum thickness of concrete. A new sidewalk should be constructed where pedestrian traffic warrants.

B. Use of “Bomanite” type of sidewalk is encouraged for large pedestrian crossings.

1.7.20 Buses and Van Pool Stops

The design of “Transportation Stations” for bus stops and van pools is required showing turning lanes, parking lanes, and shelters.

1.7.21 Traffic Signing

The project will be signed according to the State of California Manual on Uniform Traffic Control Devices.

1.7.22 Cross Slopes

The cross slope of a median shall be 2% from the center line to the top of curb. When the median curbs are not level, the cross slope from the center line to top of the lower curb could be increased to 5% before using a straight grade between the tops of curb.

1.7.23 Openings

When the distance between intersections becomes excessively long, median openings should be provided. These openings should have an 8 foot radius on the edge of gutter and should be spaced no close than 1/4 mile. The geometrics and spacing of the opening should be reviewed by the LMMS Civil Engineer.

1.7.24 Traffic and Lighting Division

Curbs and gutters are used to control drainage and access to adjacent properties, to define the roadbed to protect the public, and to assist in the orderly development of the roadsides. Concrete curbs are used for the aforementioned purposes for permanent installations and asphaltic concrete is used for temporary.

1.7.25 Cut and Fill Slopes

A. If there is a doubt about the stability of high cuts, high fills, or overburden situations, a soils testing laboratory should be consulted or a geology study should be ordered by the Designer.

B. The slopes are usually 2:1 for embankments and 1:1 for excavations. Test laboratory recommendations should be requested when an unusual soil condition may exist.

1.7.26 Vertical Clearance

Vertical clearance for all separation structures shall be a minimum of 15 feet at any point between curbs and 18 feet where fire lanes are marked.

1.7.27 Resurfacing

The roadway grade may occasionally be adjusted to permit resurfacing of the existing pavement when the existing grade very nearly meets new grade requirements. Resurfacing should be considered when the thickness of new pavement combined with the existing pavement and base will produce a structural section equivalent to laboratory recommendations.

1.7.28 Earthwork

Only structural backfill (sand equivalent = 20) will be used for embankment. Excavated soil in LMMS Plant 1 will be removed from the site after being tested for contamination and/or structural characteristics.

1.7.29 Grade Setting Sequence

Grades are set by a trial and error method using the plotter profiles and cross sections as tools in the following manner:

A. Establish preliminary grade lines for the top of curb relative to the property line profiles.

B. Adjust the grade line to meet design control, i.e., sight distance, maximum and minimum grades, etc. Circular curves can be used to approximate vertical curves for preliminary grades using either the following method or Figure 1.7.

$$K = \frac{10{,}000V}{2} \qquad R = \frac{K\,L}{A}$$

Where
R = Circular Curve Radius (Inches)
V = Vertical Scale
H = Horizontal Scale
L = Length of Vertical Curve (Stations)
A = Algebraic Grade Difference (%)

C. Determine the middle ordinate of the vertical curve and plot the midpoint. Using the circular curve as calculated above draw the vertical curve from the midpoint to the BVC and EVC.

D. Spot the adjusted top of curb elevations on the cross sections which are usually plotted in larger scale than the profiles.

E. Check cross sections at critical sections for cross slope property drainage, access damage, etc. Make necessary adjustments.

F. By repeating steps one through four, and giving proper weight to the controls, a proposed grade can be established.

1.8 INTERSECTION DESIGN

This section shows design considerations and requirements for street intersections. The conflicts which cause traffic congestions and accidents are inherent with all intersections and can usually be reduced by proper use of signalization and traffic regulations. The conflicts can also be reduced by holding the intersecting area to a minimum, by the use of channelization, and by the elimination of skewed intersections or multi-legged intersections, as covered in this section.

1.8.1 Traffic Analysis

A. The LMMS Civil Engineer will provide copies of the updated LMMS Plant 1 traffic plans, flow diagrams, accident data, and geometric design suggestions for intersections. Refer to the LMMS Plant 1 Detailed Site Plan for conceptual street and intersection layout.

B. Traffic flow diagrams indicate the direction and volume of vehicles estimated to pass through or make turning movements within an intersection for a stated period of time, usually hourly or daily. This information is then used in determining the geometrics of the intersection, i.e., left turn pockets, medians, islands, traffic control, etc. Preference should be given to the major movements as determined from the flow diagram. This requires the control of minor movements.

1.8.2 Channelization

The primary function of channelization is to separate conflicting traffic movements into definite paths of travel. This may be accomplished by the use of striping, raised marking or curbs. These controlling measures should conform to natural paths of movement and should be introduced gradually to reduce the element of surprise.

1.8.3 Storage Lanes on Master Plan Roadways

The length of storage lanes for left turn relates to the full width portion of the lane exclusive of the tapered portion. The minimum length is 150 feet at intersections of streets. Lengths other than these may be recommended by the LMMS Civil Engineer based on the left turn volume as determined from the traffic flow diagram.

1.8.4 Truck-Turn Templates

The proper design of a turning lane shall be checked with a minimum 50 foot Radius “Truck-Turn Template”. This template indicates the minimum acceptable width and radii of the turning lane allowing the truck wheels to touch both sides during turning movement.

1.8.5 Tapers and Flares

Refer to AASHTO Standards for the layout of curb tapers and flares for median storage lanes and median or island noses. Give stationing and elevations every 15 feet on 90 foot reverse taper. Use 10 feet-20 feet-20 feet intervals from nose of 50 foot parabolic flare. Begin reverse taper in multiples of five feet, i.e., +10, +15, etc.

1.8.6 Curb Return Radii and Corner-Cut-Offs

At all intersections, the right-of-way corners shall have radii related to the curb return radii such that the parkway width around the return is equal to or greater than the width of the two adjacent parkways. The standard property corner radius for intersections is 50 feet. Where buildings or other obstructions are involved smaller radii may be used with the approval of the LMMS Civil Engineer.

1.8.7 Intersection Details

The geometric details of an intersection are closely related to the ultimate geometric cross section of each of the roadways forming the intersection. Some of the details typical of all intersections that should be considered by the Designer are:

A. Clearances

They shall be provided for present and future users.

1. Four feet minimum between curb face and right-of-way line for walk return, signals, signs, drainage structures and utilities.

2. Four feet minimum between curb faces on median noses for signals and signs.

3. Sufficient lane widths within roadway to provide for all required traffic movements. This normally requires 84 feet curb to curb for major streets and 64 feet curb to curb for secondary streets.

B. Turning Lanes

1. They should be provided where possible on approaches to 100 foot intersections for left and right turning movements. This can be accomplished by the addition of left turn pockets and the elimination of parking along the right-hand curb line.

2. The minimum width of pavement for this purpose is 40 feet, allowing 2 turning lanes and 2 through lanes. Also, to be effective, these lanes must be of sufficient length to provide storage.

C. Abrupt Changes

Abrupt changes in driving lane alignment shall be avoided. Transitions of not less than 30:1 are required at the beginning of medians, islands, and to other obstructions. Where permanent curbs are being constructed, standard flares should be used for this purpose. Where temporary improvements are to be constructed, sufficient pavement shall be constructed to provide room for painted transitions of the same length.

1.8.8 Alignment

A. The characteristics of an intersection are determined to a large degree by the angles between the different legs of approaches. For discussion purposes, intersections can be classified under the headings: Right Angles, Skewed, Multi-legged and Curved.

B. Right Angle Intersections

1. The safest most economical design for three and four leg intersections is obtained when all turning movements are 90 degrees.

2. This reduces the area of conflict, reduces the distance of travel across an intersection for vehicles and pedestrians, and simplifies the signalization. A 90 degree intersection also affords the best horizontal sight distance for both approaches. An intersection may be considered as right angle when the skew is within 20 degrees of a right angle.

C. Skewed Intersection

When it is impractical to eliminate the skew of an intersection, the resultant conflict of movements may be reduced by the use of channelization. For this purpose, painted or raised islands serve to reduce the conflicting areas and to delineate the turning lanes. The radius of curvature for turning lanes should be selected to favor the major traffic movements.

D. Curved Intersections

Horizontal curves within intersections should be avoided, if possible, because the intersection breaks the continuity of the traffic lanes. Also, super-elevation requirements for the curved roadway will frequently conflict with the grade requirements of the cross street. Intersections are especially hazardous when located on the concave side of a curved street due to the horizontal sight distance limitation.

1.8.9 Roadway Design Graphs

A. Passing sight distance on crest vertical curves (from State of California Division of Highways' Planning Manual).

1. Passing sight distance is the minimum sight distance that must be available to enable the driver of one vehicle to pass another vehicle safely and comfortably, without interfering with the speed of an oncoming vehicle traveling at the design speed should it come into view after the overtaking maneuver is started. The sight distance available for passing at any place is the longest distance at which a drive whose eyes are 3.75 feet above the pavement surface can see the top of an object 4 feet high on the road.

2. Passing sight distance is considered only on 2 lane roads. At critical locations, a stretch of 4 lane construction with stopping sight distance is sometimes more economical than 2 lanes with passing sight distance.

3. The curves shown on Figure 1.8.9.1 give the length of vertical curve which satisfies a given sight distance when the algebraic difference in grades is known.

4. If possible, the horizontal alignment should be straight through the intersections, but where horizontal curves cannot be avoided, the following should be observed:

   a. Use a curve of sufficient radius to provide adequate sight distance and minimize the need for super-elevation.

   b. Do not begin or end a curve within an intersection.

   c. Eliminate angle points in excess of two degrees on major or secondary highways by use of a large radius curve.

   d. Angle points up to 5 degrees are permissible at the intersection of two local streets.

B. Stopping Sight Distance on Horizontal Curves (from State of California Division of Highways' Planning Manual)

1. Where there is an object off the pavement such as a building, cut slope, or natural growth and it restricts sight distance, the minimum radius of curvature is determined by the stopping sight distance.

2. Stopping sight distance on horizontal curves is obtained from Figure 1.8.9.2. It is assumed that the driver's eye is 3.75 feet above the center of the inside lane (inside with respect to curve) and the object is 6 inches high. The line of sight is assumed to intercept the view obstruction at the midpoint of the sight line and 2 feet above the center of the inside lane. The clear distance (m) is measured from the center of the inside lane to the obstruction.

3. The general problem is to determine the clear distance from center line of inside lane to a retaining wall, bridge tier, abutment, or other obstruction for a given design speed. Using radius of curvature and sight distance for the design speed, this figure gives the clear distance (m) from the center line of inside lane to the obstruction.

4. When the design speed and the clear distance to a fixed obstruction are known, this figure also gives the required minimum radius which satisfies these conditions.

C. Headlight sight distance on sag vertical curves (from State of California Division of Highways' Planning Manual)

1. From the curves in Figure 1.8.9.3 the length of vertical curve which provides headlight sight distance in grade sags for a given design speed is obtained when the algebraic difference in grades is known. This is the sight distance used at underpasses where the highway profile dips under the crossing facility.

2. Where adequate street lighting is provided compared to requirement in street lighting section, the vertical curve requirements of this figure may be reduced by approval of the LMMS Civil Engineer.

D. Stopping sight distance on crest vertical curves (from State of California Division of Highways' Planning Manual)

1. This is the criteria used for the design of profile grades for all major highways, secondary highways and local streets in the county.

2. The minimum stopping sight distance is the distance required by the driver of a vehicle traveling at a given speed to bring his vehicle to a stop after an object on the road becomes visible. Stopping sight distance is measured from the driver's eyes, which are assumed to be 3.75 feet above the pavement surface, to an object 6 inches high on the road. Figure 1.8.9.4 gives the length of vertical curve required to obtain stopping sight distance for a given design speed when the algebraic difference in grades is known.

1.8.10 Super-elevation

Basic Criteria (from State of California Division of Highways' Planning Manual)

A. According to the laws of mechanics, a vehicle traveling on a curve exerts an outward force called centrifugal force.

B. On a super-elevation highway, this force is resisted by the vehicle weight component parallel to the super-elevation surface and side friction between the tires and pavement. It is impossible to balance centrifugal force by super-elevation alone, because for any given curve radius a certain super-elevation rate is exactly correct for only one driving speed. At all other speeds there will be a side thrust either outward or inward, relative to the curve center, which must be offset by side friction.

C. If the vehicle is not skidding, these forces are in equilibrium as represented by the following equation:

Where S = Super-elevation slope in feet per foot
F = Side friction factor
R = Radius of Curve in feet
V = Velocity in miles per hour

Centrifugal Factor: $S + F = 0.067V^2/R$

D. Safe Speed on Horizontal Curves

Standard super-elevation rates are designed to hold the portion of the centrifugal force that must be taken up by tire friction within allowable limits. The limiting save friction factors related to speed have been found to be as shown in Figure 1.8.10.1. These factors shall apply equally to concrete and bituminous pavements.

E. Super-elevation, Rural, and Urban Standards

1. The maximum rates of super-elevation usable on highways are controlled by several factors:

   a. Terrain condition, flat or mountainous
   b. Type of area, rural or urban
   c. Frequency of slow moving vehicles that would be subject to excessive centripetal force making it necessary to steer against the direction of the horizontal curve.

   Consideration of these factors jointly has led to the development of Figure 1.8.10.2 which shows 2 curves labeled rural and urban. The rural curve should be used where conditions permit and will give super-elevations that will result in what may be termed a “comfortable ride”. The urban curve is the minimum standard of design for a super-elevated curve.

2. A satisfactory design can often be obtained by the selection of a rate of super-elevation that will fall between the urban and rural curves. Familiarity with the existing terrain, the type of existing improvement, the legal speed in the area and any other physical or legal characteristics that exist must be known before a reduction from the rural curve is made.

3. In the design of a highway involving a number of super-elevated curves an effort should be made to keep a uniform design speed for the super-elevated curves. To vary the design speed from curve to curve when the physical characteristics of the terrain will allow a larger radii or more super-elevation is poor design practice. It is recommended that a preliminary layout of the roadway on the proposed alignment indicating proposed design speeds at each curve be made prior to final design. A layout of this nature will point out irregularities and a balanced design.

F. Super-elevation Transitions

1. A super-elevation transition is variable in length depending upon the amount of super-elevation. With respect to the beginning or end of curve, 2/3 of the transition is on the tangent approach and 1/3 within the curve. This results in 2/3 of the full super-elevation at the beginning of the curve.

2. Super-elevation transitions shall be designed as shown on Figure 1.8.10.3.

3. After a super-elevation transition is computed, profiles of the pavement edges should be plotted and irregularities removed by introducing smooth curves. These profiles should also be checked to that there is adequate grade for street drainage.

1.8.11 Fire Department Access

Design shall provide for an all weather road 26 feet wide around every major structure with a 50 foot turning radius and turning movements shall be checked with a radius template. The parking area should be utilized where possible. The new road must be able to support the heaviest fire fighting vehicle which weighs 65,000 lbs., and 48,000 lbs. in the rear axle. All dead end streets more than 150 feet long will need to have a turnaround area at street end. Building projections and/or trees, shrubs or other obstructions shall not encroach upon the open space above the required access roadway.

1.9 DRAINAGE

1.9.1 Surface Drainage

To avoid diversions, existing surface drainage patterns shall be maintained. Cross gutters may be used on local streets but not across major or secondary streets. Concentrated flows should not be discharged onto the sidewalk or parkway area. Small quantities such as those from roof drains should be discharged through the curb drain. Larger quantities should be discharged through a parkway drain.

1.9.2 Drainage Systems

Where an adequate storm drain system is available, surface drainage should be collected and conveyed to that system. Proposed storm drains should be sized to restrict 10 year flooding conditions and maintain one unflooded traffic lane.

1.9.3 Existing Utilities

A. Existing utilities are shown on LMMS CAD drawings. Existing construction drawings are available through the LMMS Engineer, and the Designer shall be responsible for verifying actual location of utilities.

B. The existing and proposed utility system shall be designed by the Hardy Cross method or equal. Computer calculations and a utilities layout calculation sheet shall be submitted to the LMMS Engineer showing:

1. Utility source locations

2. Flow rates and pressures

3. Demands on entire existing and proposed systems

4. Existing and proposed utilities

5. Utility easements conforming to the interim master plan

6. Utilities sized for the interim master plan build out proposal

1.9.4 Hydrology

The Civil Engineering group of LMMS Facility Engineering organization has developed a hydrology map for LMMS Plant 1. The Civil Designer will comply with all data and drainage basins shown on this map (i.e., basin areas, unit flows, infiltration factors, etc.).

This hydrology map will be modified by the rotational method, as described in the following sections.

1.9.5 Hydrology Design Criteria

A. A hydrology study shall be performed by the Designer and checked by the LMMS Civil Engineer during design period. The rainfall intensity in Figures 1.9.5.1, and 1.9.5.2

B. The Designer shall make a field review of the drainage area before the hydrology input is submitted to the computer.

C. The Designers will submit the following items to the LMMS Civil Engineer for checking:

1. Computer printout.

2. A hydrology map showing (modification of LMMS Plant 1 hydrology map):

a. Drainage basins for each reach and all tributary areas.

b. Junction points for each reach and/or confluence points, labeled for both the 10 and 100 year storm. The following data will be shown at each point:

Areas (acres)
Times of concentration
Flow rates

D. The flow rates will be combined at the confluence points by hydrographic methods.

E. Flow arrows for overland flow and conduits.

F. The manning formula will be used for calculating all flow rates.

1.9.6 Hydraulic Design Criteria

A. Use County of Santa Clara Flood Control or Local City standards for storm drains (which ever is more stringent).

B. A Hydraulic Grade Line (HGL) will be calculated and all energy loses will be included. The sizing of the system will be based on the most efficient use of the HGL. The HGL will be plotted on the profile of the improvement plans.

C. Each reach on the improvement plans will show the Flow Rate (Q) in cfs, the Velocity (V) in fps, the type and length of pipe, the D load, and the type of pipe.

D. The static water surface will be shown on the profile. The recommended joints will reflect this water surface.

E. The storm frequency shall be consistent with the policy stated:

10 year storm - streets and parking lots
100 year storm - buildings

Use County of Santa Clara drainage manual (Figure 5 Palo Alto, Figure 6 San Jose) for INF curves.

F. The Q = CIA rational method will be used for interim drainage basins.

G. Street capacity sections and/or curves will be submitted.

H. Inlet capacity curves will be supplied by LMMS.

The result of the hydrology study is to submit calculations which will verify the flows and velocities that will be shown in the swales, gutters, and conduits of the improvement plans and profiles.

I. A table of the Qs for the main line and laterals on that sheet shall be placed on each drainage sheet.

J. The general drainage note shall be placed on the first drainage sheet. All of the following sheets shall make a reference to the general drainage note.

K. All known utilities shall be shown on the plans. They should also be shown on profile if they cross any of the proposed drainage conduits.

L. At least one bench mark shall be placed on each drainage sheet.

M. The HGL for the main line and all laterals shall be plotted for the final check.

O. All drainage easements shall be shown by dashed lines on each drainage plan.

1.9.7 Required Submittals

Hydrology map
Hydrology calculations
5 and 10 year storm
Hydraulic grade line on Improvement Plans (Plot)
Energy grade line
Hydraulic loss calculations for all storm structure (inlets, manholes confluence structures, etc.)
D load calculations
Trenching details for structural backfill
Static water surface
Shoring and de-watering details
Storm inlet and manhole details
Street capacity calculations
Inlet capacity calculations

1.9.8 Hydraulic Grade Line

A. The hydraulic grade line shall be terminated at the pumping water surface located north of First Avenue at the storage ponds in LMMS Plant 1.

B. The LMMS Civil Engineer has plotted the HGL and water surfaces for LMMS Plant 1. The Designer will meet these HGLs for all calculations. The HGL will be plotted on the profile of the proposed pipe.

1.9.9 Catch Basin

A. Catch basin capacities shall be checked against the design figures of CALTrans Highway Design Manual.

B. Catch basins shall be placed at a maximum interval of 300 feet.

C. Catch basins shall be placed in medians at the beginning of transitions from super-elevated to crown sections, at median openings in a super-elevated section, and in the outer curb at the beginning of transitions from crown to super-elevated sections.

D. Catch basins will be CALTrans standards, poured-in-place concrete with reinforcing steel. All frames will be cast iron and bicycle proof.

E. Local Depressions

1. Local depressions shall not be used on streets.
2. Use CALTrans standard local depressions which show curb and gutter transitions.

F. Except for special situations each catch basin shall have a separate connector to the main line.

1.9.10 Inlets and Outlets

A. Use an inlet type G1 on detail sheet D73 of the CALTrans Standard Details, to collect water flowing in ditches, etc., for temporary solutions where a permanent catch basin would be uneconomical.

B. Check all inlet and outlet structures for adequate protection. All drainage systems that are accessible to unauthorized personnel shall have removable protection bars or protection barriers to prevent such entry at the structures.

C. Provide chain link fences at head walls in open culvert situations.

D. Where inlets service areas of possible chemical spills and contamination, a secondary containment system shall be included and approved by LMMS.

1.9.11 Drainage Pipes

A. All storm drain will be reinforced concrete pipe, Type III (ASTM), unless the types of loading and/or cover dictate otherwise.

B. All pipe structures will be capable of withstanding an AASHTO, H-20 truck load as a minimum.

C. Minimum size of pipe:

1. Main line or lateral pipe - 24 inches.

2. RCP, connector pipe - 12 inches, provided that the length does not exceed 75 feet.

3. CMP connector pipe - 12 inches (when CMP is approved).

D. If the main line or lateral conduit is in an area where the pipe may carry a significant amount of debris, the minimum diameter is 24 inches.

E. Where practicable, pipe line curves should have a radii of 90, 45, or 22-1/2 feet. The minimum allowable radii for reinforced concrete pipe shall be those given in Bulletin No. 7 of the American Concrete Pipe Company on Centrifugal Spun RCP.

F. When a radius is less than the allowable, the resulting joint opening shall be protected by a reinforced concrete collar.

G. Pipe grades shall be calculated to the number of decimal places necessary to arrive at the difference in elevation between end points.

H. Lengths of pipe shall be given to the nearest foot on plan. For pipe profiles, use FL to FL between structures for the length (not minus two inches). Lengths of pipe may be scaled for estimating purposes.

I. The desirable clearance between the gutter grade of the road and a storm drain pipe is 30 inches. If desirable clearances cannot be met, the pipe must be encased in concrete when the cover (from finished surface) is 12 inches or less.

J. D loadings for all concrete pipe shall be checked against Figure 1.9.11.1; also, check for unusual bedding or soil conditions. The Designer should make calculations of "D" loadings if the cover exceeds 25 feet and/or shallow cover.

K. Gauges for all CMP shall be checked against Figure 1.9.11.2 and as shown on plans.

L. The horizontal alignment of connector pipes shall not have any angle or bends.

1.10 SEWER SYSTEM

Sewer systems at the site can be classified into 2 categories: sanitary and industrial waste.

1.10.1 Sanitary

A. The sanitary sewer discharges into the city system and only waste acceptable to this system may be discharged.

B. Design of a complete system shall be required including piping, manholes, trenching details, lift stations (if approved), laterals or any other structures required.

C. Verify the existing sewage system by examining LMMS CAD drawings and as-built drawings.

1.10.2 Design of Sanitary Sewer

Supporting Calculations Criteria

A. Velocity

Calculate the velocity of flow under actual conditions. Velocity shall not be less than 2 ft./sec. (fps), maximum velocity shall not be greater than 8 fps at design flow, where 2 fps velocity cannot be maintained, minimum slope shall be 0.01 foot per foot unless otherwise approved.

B. Flow generation rates shall comply to the Local Municipal Code and the current adopted Uniform Plumbing Code.

1. Note that design flows include 1.75 peaking factor. Specific applications may require generation rates other than those specified above.

2. For slopes not on chart: $Q = 0.69\ V$, $V = 19.12\sqrt{S}$

C. Maximum allowable depth, with peaking, is as follows:

8 inch	50 percent
10 inch and larger	75 percent

D. The hydraulic grade line and/or water surface will be plotted on the profile of the improvement plans. A profile will be plotted for each reach and will list the following:

1. The type and length of the sewer
2. The slope and inverts
3. The D load
4. Flow (cfs) and velocity
5. Refer to storm drain section for manhole structure

E. The criteria for the separation of water mains and sanitary sewers shall be in accordance with State of California, Department of Health Services. Scale of drawings shall be 1 inch-40 feet horizontal and 1 inch-4 feet vertical. Calculations shall be made on standard 8-1/2 inch x 11 inch sheets and must be wet signed by a Civil Engineer registered in the State of California.

1.10.3 Alignment

A. Main Line Horizontal Criteria

1. Line to be 5 feet off center line of street.

2. Ten foot separation with water mains.

3. Three foot separation with other utilities.

4. Curvilinear alignment may be permitted if it meets City's design criteria. The Designer shall submit all pertinent data and secure approval prior to starting preliminary plans.

5. Manholes are required at all change of directions and they shall be spaced at 350 feet maximum.

6. Clean out shall not be permitted.

B. Main Lines Vertical Criteria

1. Minimum depth shall be 4.0 feet.

2. Minimum slope shall be:

(S- 0.004)	for 8 inch
(S- 0.003)	for 10 inch
(S- 0.0024)	for 12 inch
(S- 0.0018)	for 15 inch

3. Manholes are required at grade breaks.

4. Drop of elevation through manholes - 0.10 foot. At right angle alignment or bends, drop shall be 0.20 foot.

5. Vertical curve may be permitted. Prior approval is required.

6. Main shall be encased if separation with water main is less than 3 feet.

7. Six inch sand blanket separation with other utilities.

C. Laterals Horizontal Criteria

1. Must clear driveways and entries
2. Ten feet separation with water services

D. Laterals Vertical Criteria

1. Minimum 5 foot cover at property line, minimum slope S = 0.02, with a saddle, unless otherwise approved.

2. Laterals shall be below the water main with a minimum clearance of 6 inches. Where clearances are critical, and laterals designed to clear the waterline, they shall be detailed on the plans.

3. Laterals shall not enter the manhole.

1.10.4 Sanitary Sewer Manholes

A. Precast standard concrete manholes shall be used (poured concrete base).

B. Standard 4 foot structures with 2 foot frame and cover shall be called out on the plans where the depth of manhole measure from the flow line to the rim is less than 12 feet, and pipe diameters are less than or equal to 10 inches.

C. Manholes shall be 5 feet in diameter with 3 foot frame and cover under the following conditions:

1. Depth of the structure from the flow line to the rim is equal or greater than 12 feet.

2. Sanitary sewer main is 12 inches or greater.

D. Manhole spacing shall be 300 feet minimum.

E. Calculations for non-structured manholes with AASHTO-H20 loadings shall be submitted to LMMS for review and approval.

F. Manhole rim elevations shall be lower than all pad elevations immediately down stream. If this condition cannot be met, then back flow prevention valve must be installed in accordance with the Uniform Plumbing Code, Section 409-a.

1.10.5 Pipe Material Size

A. Main Line

1. Main line minimum size shall be 8 inches.

2. Pipe type shall be:

   a. Extra Strength VCP - Site

   b. Ductile Iron Pipe - Building

   c. Composite truss pipe and PVC pipe may be permitted provided that they meet the special provisions for the construction of plastic sewer pipe. Recommendation by the Designer along with supporting data shall be submitted to LMMS and approved prior to approving the plans, otherwise, the plans shall note VCP. For more information refer to the City's approval for the Construction of Sanitary Sewers-Plastic Sewer Pipe.

3. Ductile iron pipe shall be used where construction constraints, such as, clearances with waterlines or excessive loading condition warrants their use.

B. Laterals

1. Lateral minimum size shall be 8 inches.

2. VCP shall be called out on the plans.

3. Ductile iron pipe shall be used where conflict with water mains (i.e., clearances) occur.

4. No sewer will be tied to storm drain lines.

5. Double contained pipe will be detailed if required by governing codes.

1.11 WATER DISTRIBUTION DESIGN

1.11.1 General

A. All design shall be in conformance with the California Water Works Standards, Title 22 of the California Code of Regulations and the Criteria for the Separation of Water Mains and Sanitary Sewers as approved by the Department of Health Services, Sanitary Engineering Section. Construction plans shall be drawn on standard title block sheets. Scale of drawings shall be 1 inch = 40 feet horizontal and 1 inch = 4 feet vertical.

B. Calculations shall be made on standard 8-1/2 inch x 11 inch sheets and must be wet signed by a Civil Engineer registered in the State of California.

1.11.2 Alignment

A. Main Lines Horizontal Criteria

1. 10 foot separation with sanitary sewer lines.

2. 3 foot separation with other utilities.

3. Deflection angle to meet manufacturers recommendations.

B. Main Lines Vertical Criteria

1. Line to have minimum 3 foot cover for 8 inch or less. Line to have minimum 3.5 foot cover for 10 inch or greater.
2. 3 feet minimum separation with sanitary sewer lines and water on top.

3. 6 inch sand blanket separation with other utilities.

4. A 4 inch B.O. is required at all sags except where fire hydrant exists.

5. One inch air vac is required at all summits.

6. Water lines shall be shown in profile where crossing other underground facilities, utilities, sewer, storm drain, etc.

1.11.3 Water Services

A. Horizontal Criteria

1. Must clear driveway and entries.

2. Ten foot separation with sanitary sewer lateral.

3. Clustered meter boxes shall be located in landscaped areas where not obstructed by parked cars and shrubbery. Meter boxes shall not be located in sidewalks.

1.11.4 Supporting Calculations

A. LMMS Plant 1 fire and domestic pipe systems are cross connected. The pressure is generally in the range of 65 to 85 psi.

The Designer shall verify these flow pressures and rates by field testing. LMMS Fire Department in Building 141 also has records and a testing device available.

The Designer will plot the 7 day/24 hour pressure flows.

B. The fire main system shall deliver the minimum fire flows of 1,200 gpm at 80 psi for sprinkled buildings.

C. Fire Protection Engineering group of LMMS Facility Engineering organization will furnish the hydraulic data at the closest hydrant.

D. Minimum residual pressure at the most remote fire hydrant in the project shall be 60 psi.

E. Pipe velocities for fire flow conditions shall not exceed 8 feet per second unless otherwise approved by the Fire Protection Engineering group.

F. Computer analyzed methods are acceptable providing the input meets above conditions (C=100).

G. Hardy Cross method or approved equal may be used in a looped system to determine the pressures at critical locations.

H. Computer analyzed methods are acceptable providing the input meets above conditions, (C = 100).

1.11.5 Valves and Valve Layout Criteria

A. Butterfly valves shall be called out on the plans except where hot taps are shown.

B. Butterfly valves for the fire main system shall not be used.

C. They should be placed near the fire hydrant valves of other facilities where they can be easily located.

D. Minimum number of valves at a tee shall be 2, and at a cross shall be 3.

E. Valves shall be installed on each branch of tees and crosses that provide the main feed into a development.

F. Where possible, valves shall be arranged so that no more than two fire hydrants and/or riser systems will be shutoff at one time when a water line is shut down for repairs.

1.12 DESIGN OF GAS, CHILL WATER AND OTHER UTILITIES

A. The Designer will design all utility systems by an accepted engineering method such as the “Hardy Cross”. All calculations and/or computer printouts will be submitted to LMMS for approval.

B. Verify all utilities and sources (mains, reducing stations, heaters, etc.) and show them on the improvement plans. Required flow rates, pressures, and velocities will be supplied.

1.13 SEISMIC DESIGN

Earthquake design shall conform to the current adopted Uniform Building Code and Local Municipal Ordinances and shall be submitted to LMMS for review and approval as required.

END OF SECTION

FIGURE 1.7

RADII OF CIRCULAR CURVES THAT APPROXIMATE VERTICAL CURVES FOR VARIOUS DESIGN SPEEDS

SCALE: HORIZONTAL one inch = 20 feet, one inch = 40 feet; VERTICAL one inch = 2 feet, one inch = 8 feet

R	CREST				SAG		
	PASSING (2 LANE)		STOPPING		HEADLIGHT COMFORT		
	SIGHT DIST.	M.P.H.	SIGHT DIST.	M.P.H.	SIGHT DIST.	M.P.H.	M.P.H.
6	199	18	130	25	93	20.5	23.5
7	215	18.5	140	26	103	21.5	25.5
8	230	19	150	27	113	23	27
9	244	19	159	28	122	24	29
10	257	19.5	167	29	131	25	30.5
11	269	19.5	175	30	140	26	32
12	281	20	183	31	149	27	33.5
13	293	20	191	32	157	28	35
14	304	20	198	32.5	166	29	36
15	314	20.5	205	33.5	174	30	37.5
16	325	20.5	212	34.5	182	30.5	38.5
17	335	21	218	35	190	31.5	40
18	344	21	224	35.5	199	32.5	41
19	354	21	230	36.5	207	33.5	42
20	363	21.5	236	37	215	34.5	43
21	372	21.5	242	37.5	223	35.5	44
22	381	21.5	248	38.5	230	36	45
23	389	22	254	39	238	37	46
24	398	22	259	39.5	246	38	47
25	406	22	264	40.5	254	39	48
26	414	22.5	270	41	262	40	49
27	422	22.5	275	41	269	40.5	50
28	430	22.5	280	41.5	277	41.5	51
30	445	23	290	42.5	292	43	53
32	459	23.5	299	43.5	307	44.5	54.5
34	473	23.5	308	44.5	322	45.5	56
35	480	23.5	313	45	330	46.5	57
36	487	24	317	45	337	47	58
38	500	24	326	46	352	48.5	59.5
40	513	24.5	334	47	367	50	61
45	545	25	355	49	404	53	65
50	574	25.5	374	50.5	441	56.5	68
55	602	26	392	52	477	59.5	71.5
60	629	26.5	410	54	513	63	
65	655	27	426	55	550	66	

FIGURE 1.7 (continued)

RADII OF CIRCULAR CURVES THAT APPROXIMATE VERTICAL CURVES FOR VARIOUS DESIGN SPEEDS

SCALE: HORIZONTAL one inch = 20 feet one inch = 40 feet VERTICAL one inch = 2 feet one inch = 8 feet

R	CREST				SAG		
	PASSING (2 LANE)		STOPPING		HEADLIGHT COMFORT		
	SIGHT DIST.	M.P.H.	SIGHT DIST.	M.P.H.	SIGHT DIST.	M.P.H.	M.P.H.
70	679	27.5	442	56.5	586	69	
75	703	28	458	58	622	71.5	
80	726	28.5	473	59.5			
90	770	29.5	502	62			
100	812	30.5	529	64.5			
110	851	31	555	66.5			
120	889	32	579	68.5			
130	926	32.5	603	70.5			
140	961	33.5	626	72			
150	994	34					
160	1127	34.5					
170	1058	35.5					
180	1089	36					
190	1119	36.5					
200	1148	37					
250	1284	40					
300	1406	42.5					
350	1519	44.5					
400	1624	46.5					
500	1815	50.5					
600	1988	54					
700	2148	57					
800	2296	60					
900	2435	63					
1000	2567	65.5					

FIGURE 1.7 (continued)

RADII OF CIRCULAR CURVES THAT APPROXIMATE VERTICAL CURVES FOR VARIOUS DESIGN SPEEDS

SCALE: HORIZONTAL one inch = 20 feet one inch = 40 feet VERTICAL one inch = 2 feet one inch = 8 feet

R	CREST				SAG		
	PASSING (2 LANE)		STOPPING		HEADLIGHT COMFORT		
	SIGHT DIST.	M.P.H.	SIGHT DIST.	M.P.H.	SIGHT DIST.	M.P.H.	M.P.H.
3	199	18.0	129	25.093	20.5	23.5	
4	230	19.0	149	27.0	113	23.0	27.0
5	256	19.5	167	29.0	131	25.0	30.5
6	281	20.0	183	31.0	149	27.0	33.5
7	304	20.0	198	32.5	166	29.0	36.0
8	325	20.4	212	34.5	182	30.5	38.5
9	344	21.0	224	35.5	199	32.5	41.0
10	363	21.5	236	37.0	215	34.5	43.0
11	381	21.5	248	38.5	230	36.0	45.0
12	398	22.0	259	39.5	246	38.0	47.0
13	414	22.5	270	41.0	262	40.0	49.0
14	430	22.5	280	41.5	277	41.5	51.0
15	445	23.0	290	42.5	292	43.5	53.0
16	459	23.5	299	43.5	307	44.5	54.5
17	473	23.5	308	44.5	322	45.5	56.0
18	487	24.0	317	45.0	337	47.0	58.0
19	500	24.0	326	46.0	352	48.5	59.5
20	513	24.5	334	47.0	367	50.0	61.0
21	526	24.5	342	47.5	397	52.5	64.0
22	538	24.5	350	48.5	426	55.0	67.0
23	550	25.0	360	49.0	441	56.5	68.0
24	563	25.0	368	50.0	455	58.0	69.5
25	574	25.5	374	50.5	484	60.0	72.0
26	585	26.0	382	54.5	513	63.0	75.0
27	596	26.0	390	52.0	542	65.5	
28	606	26.5	396	52.5	571	68.0	
30	629	26.5	410	54.0	586	69.0	
32	652	27.0	423	55.0			
34	670	27.5	436	56.0			
35	679	27.5	442	56.5			
36	690	28.0	449	57.0			
38	707	28.5	462	58.0			
40	726	28.5	473	59.5			
45	770	29.5	500	62.0			
50	812	30.5	529	64.5			
55	581	31.0	555	66.5			

FIGURE 1.7 (continued)

RADII OF CIRCULAR CURVES THAT APPROXIMATE VERTICAL CURVES FOR VARIOUS DESIGN SPEEDS

SCALE: HORIZONTAL one inch = 20 feet, one inch = 40 feet; VERTICAL one inch = 2 feet, one inch = 8 feet

R	CREST				SAG		
	PASSING (2 LANE)		STOPPING		HEADLIGHT COMFORT		
	SIGHT DIST.	M.P.H.	SIGHT DIST.	M.P.H.	SIGHT DIST.	M.P.H.	M.P.H.
60	889	32.0	579	68.5			
65	926	32.5	603	70.5			
70	961	33.5	626	72.0			
75	994	34.0					
80	1027	34.5					
90	1089	36.0					
100	1148	37.0					
110	1205	38.0					
120	1257	39.0					
130	1309	40.5					
140	1360	41.5					
150	1406	42.5					
160	1452	43.0					
170	1498	44.0					
180	1538	45.0					
190	1584	45.5					
200	1624	46.5					
250	1815	50.5					
300	1988	54.5					
350	2148	57.0					
400	2296	60.0					
500	2567	65.5					
600	2813	70.5					

FIGURE 1.8.9.1

Passing Sight Distance

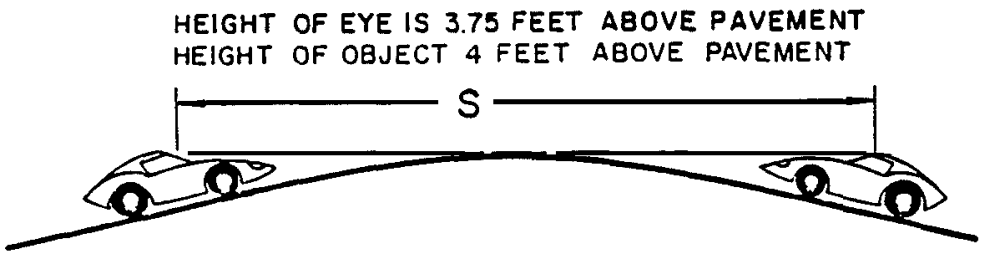

L = LENGTH OF VERTICAL CURVE IN FEET
A = ALGEBRAIC DIFFERENCE IN GRADE RATE IN %
S = SIGHT DISTANCE IN FEET
V = DESIGN SPEED IN M.P.H. FOR S

WHEN S > L: $L = 2S - \frac{3100}{A}$

WHEN S < L: $L = \frac{AS^2}{3100}$

DESIGN SPEED M.P.H.	SIGHT DISTANCE FEET
30	800
40	1300
50	1700
60	2000
70	2400

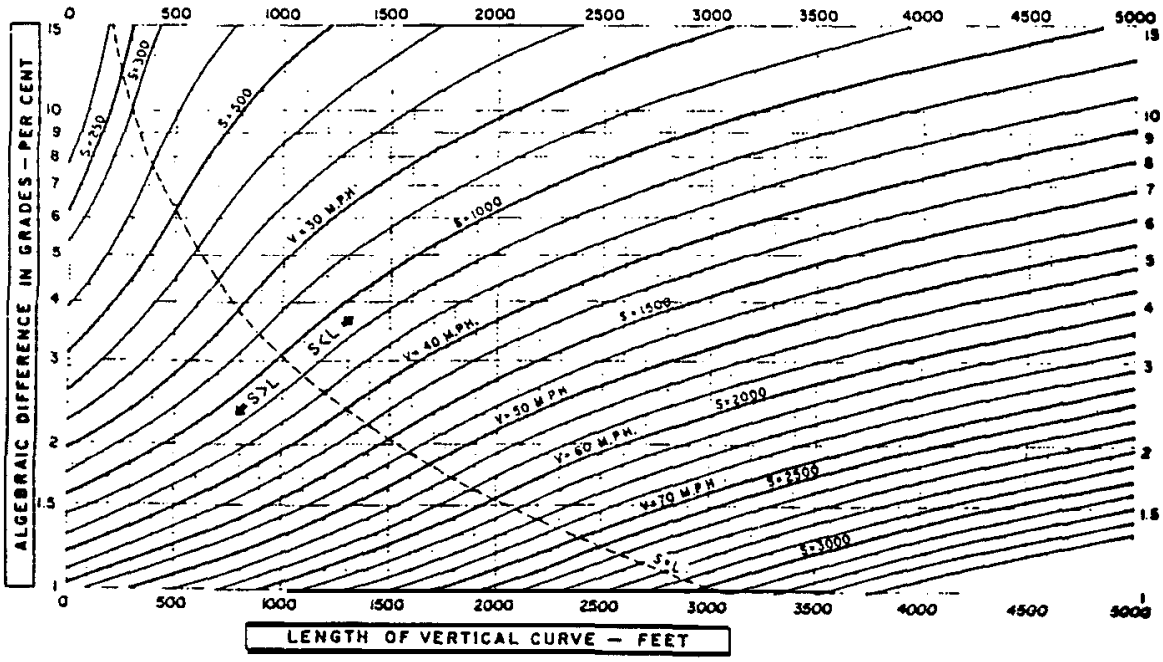

FIGURE 1.8.9.2

Stopping Sight Distance

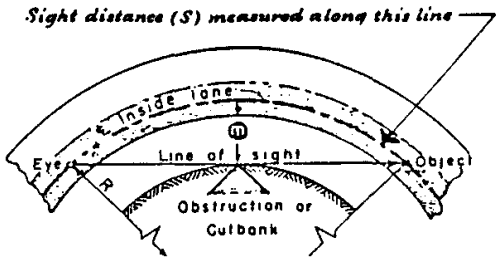

Height of eye-3.75 feet.....Height of object-0.50 feet.

Line of sight is 2.0 feet above ℄ inside lane at point of obstruction.

S = SIGHT DISTANCE IN FEET
R = RADIUS OF ℄ INSIDE LANE IN FEET
m = DISTANCE FROM ℄ INSIDE LANE IN FEET
V = DESIGN SPEED FOR S IN M.P.H.

ANGLE IS EXPRESSED IN DEGREES

$$m = R\left[\text{vers}\left(\frac{28.65\,S}{R}\right)\right]$$

$$s = \frac{R}{28.65}\left[\cos^{-1}\left(\frac{R-m}{R}\right)\right]$$

FORMULA APPLIES ONLY WHEN S IS EQUAL TO OR LESS THAN THE LENGTH OF CURVE.

DESIGN SPEED MPH	SIGHT DISTANCE FEET
30	200
40	275
50	350
60	525
65	600
70	750
75	850
80	950

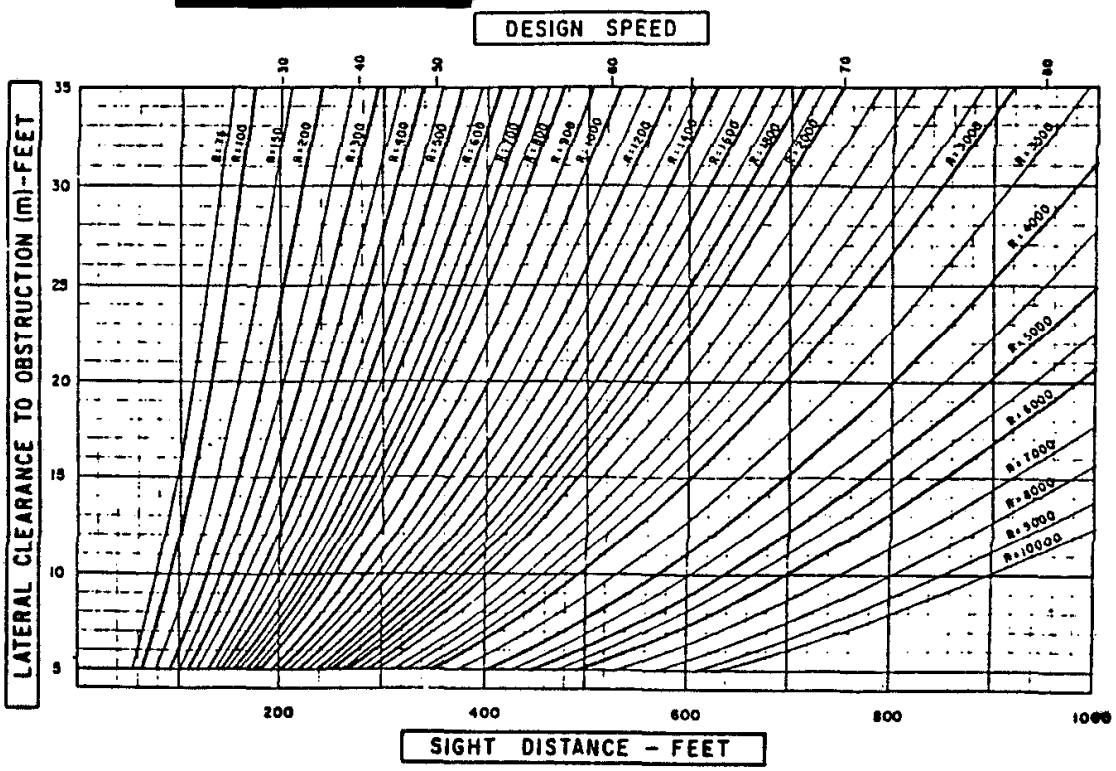

FIGURE 1.8.9.3

Headlight Sight Distance

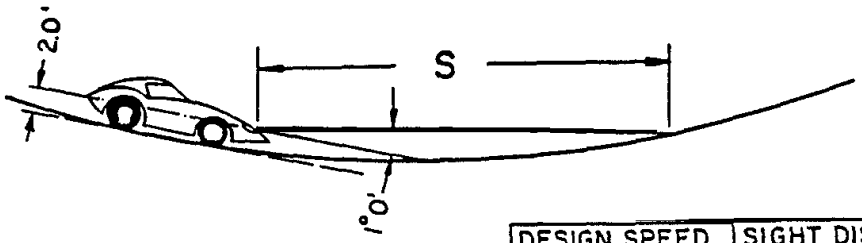

L = CURVE LENGTH (FT.)
A = ALGEBRAIC GRADE DIFFERENCE (%)
S = SIGHT DISTANCE (FT.)
V = DESIGN SPEED (M.P.H. FOR 'S')

WHEN S>L. $L = 2S - \frac{400+3.5S}{A}$

WHEN S<L: $L = \frac{AS^2}{400+3.5S}$

DESIGN SPEED (M.P.H.)	SIGHT DISTANCE (FEET)
30	200
40	275
50	350
60	525
65	600
70	750
75	850
80	950

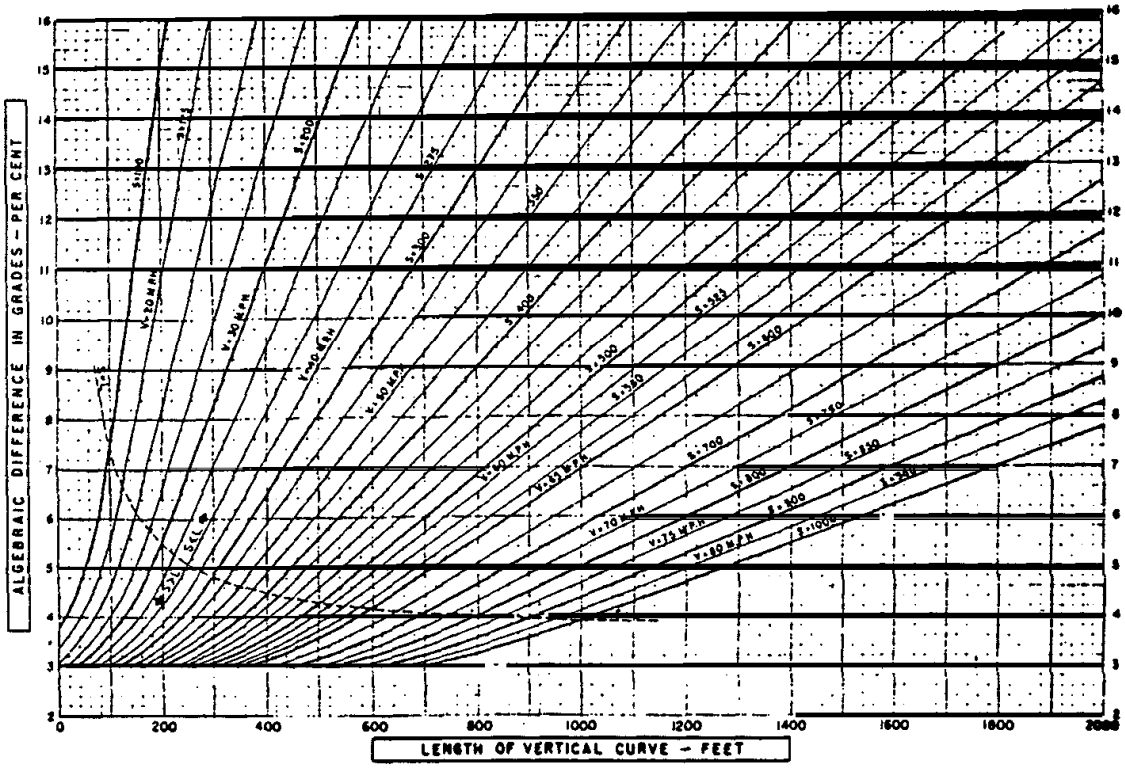

FIGURE 1.8.9.4

Stopping Sight Distance, Crest Vertical Curves

HEIGHT OF EYE 3.75 FEET
HEIGHT OF OBJECT 0.50 FEET

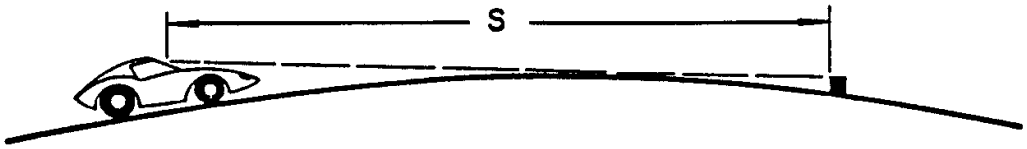

L = CURVE LENGTH IN FEET
A = ALGEBRAIC GRADE DIFFERENCE (%)
S = SIGHT DISTANCE (FT.)
V = DESIGN SPEED (M.P.H.) FOR 'S'

WHEN S > L $\quad L = 2S - \frac{1398}{A}$

WHEN S < L $\quad L = \frac{AS^2}{1398}$

DESIGN SPEED (M.P.H.)	SIGHT DISTANCE (FEET)
30	200
40	275
50	350
60	475
65	550
70	600
75	675
80	750

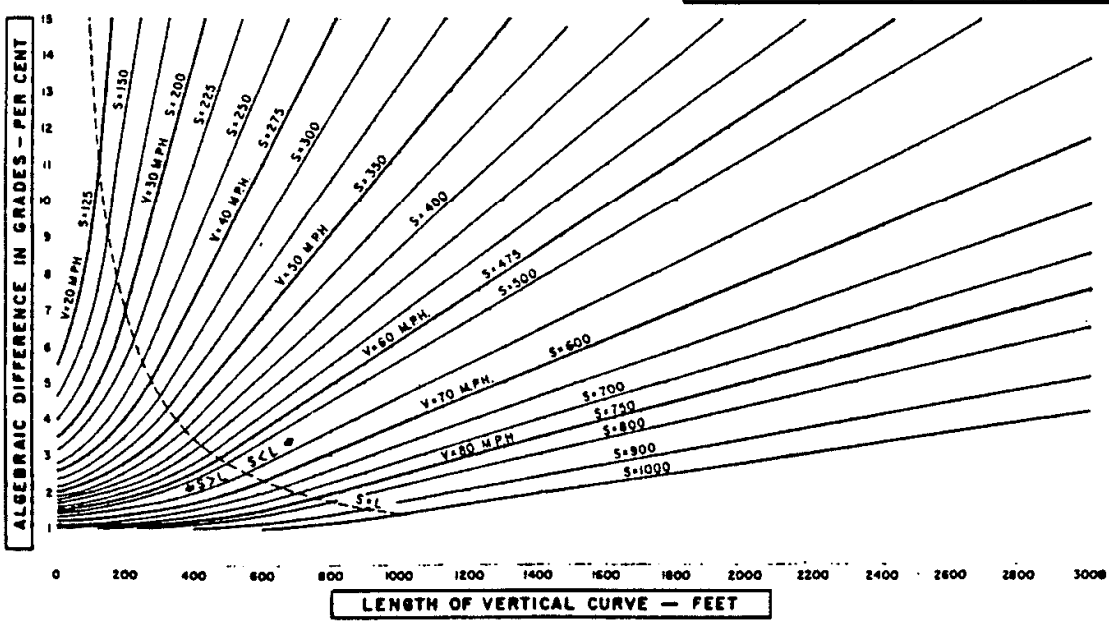

FIGURE 1.8.10.1

Safe Speed on Horizontal Curves

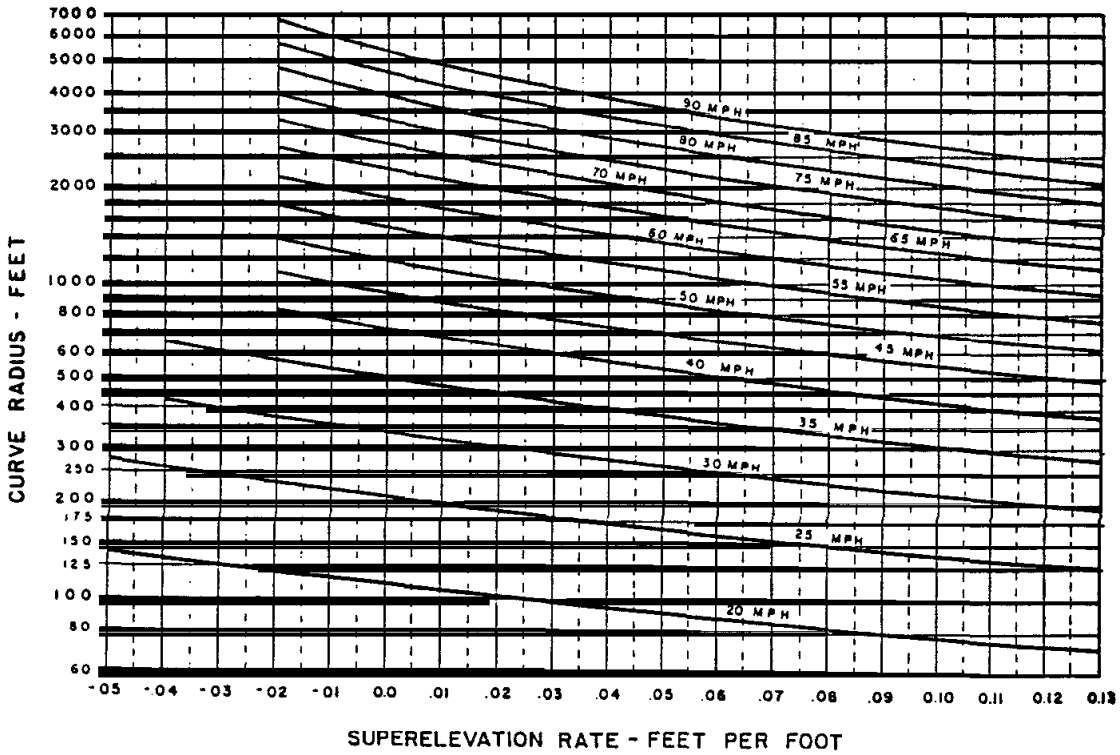

SPEED	FRICTION FACTOR
20	0.24
30	0.18
40	0.15
50	0.14
60	0.13
70	0.12
80	0.11
90	0.10 (Extrapolated)

S = SUPERELEVATION
F = FRICTION FACTOR
V = SPEED IN MILES PER HOUR
R = RADIUS IN FEET

$$S+F=\frac{0.067\,V^2}{R}$$

FIGURE 1.8.10.2

Super-elevation, Rural and Urban Standards

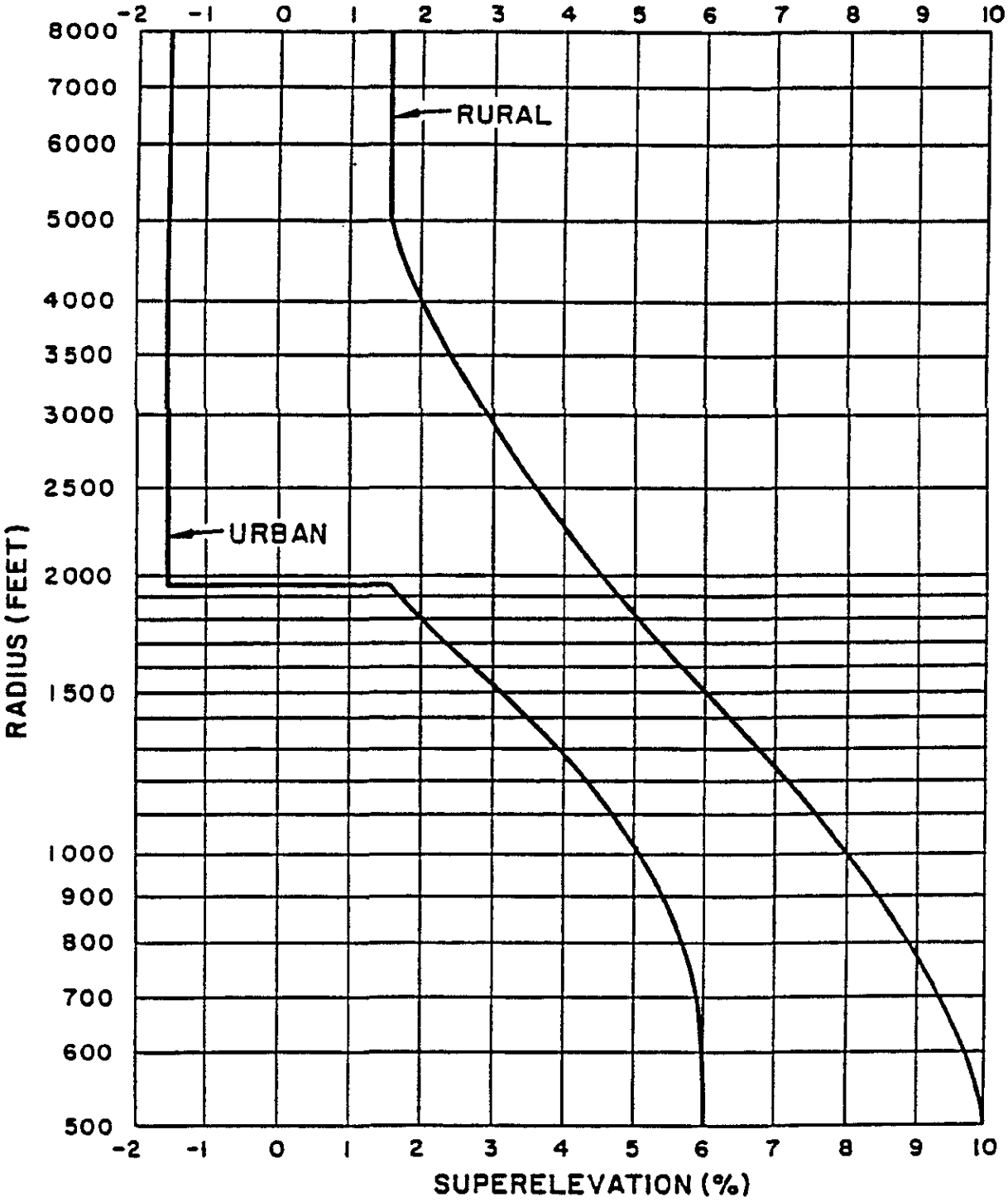

FIGURE 1.8.10.3

Super-elevation Transition

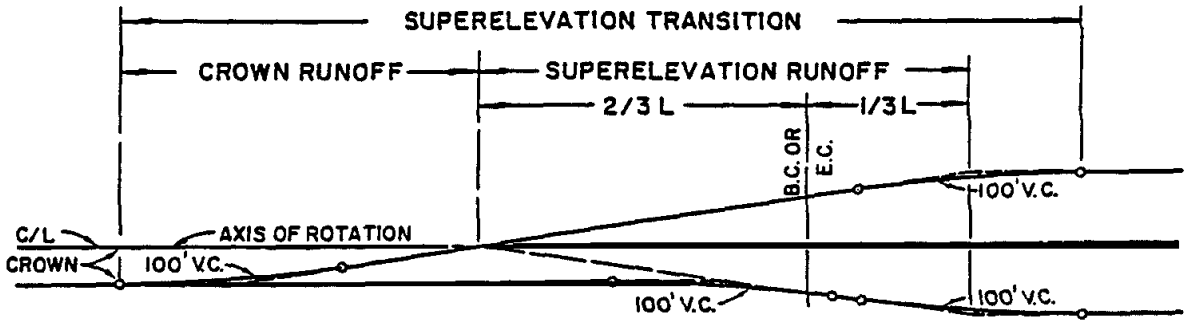

FORMULA: L = 3600S (150' MINIMUM)
L = LENGTH OF SUPERELEVATION RUNOFF IN FEET
S = SUPERELEVATION RATE IN FEET PER FOOT

S(FT./FT.)	L(FT.)
0.02 TO 0.04	150
0.05	180
0.06	210
0.07	270
0.08	300
0.09	330
0.10	360

FIGURE 1.9.5.1

RAINFALL INTENSITY

Developed from County of Santa Clara Drainage Manual, current edition, using the formula $I=K/t^n$ and a mean annual precipitation of 16 inches (flatlands) and 20 inches (hillside).

Flatland: west of Piedmont Road, Evans Road, 680 Freeway
Hillside: east of Piedmont Road, Evans Road, 680 Freeway

	Flatland		Hillside	
Time (minutes	10	100	10	100
5	2.84	3.89	3.45	4.71
6	2.57	3.55	3.12	4.30
7	2.37	3.30	2.88	3.99
8	2.21	3.9	2.68	3.74
9	2.07	2.91	2.51	3.52
10	1.96	2.77	2.38	3.35
11	1.86	2.64	2.26	3.19
12	1.77	2.53	2.15	3.06
13	1.70	2.44	2.07	2.95
14	1.64	2.35	1.98	2.84
15	1.57	2.27	1.91	2.74
16	1.52	2.20	1.85	2.66
17	1.47	2.13	1.79	2.58
18	1.43	2.07	1.73	2.51
19	1.39	2.02	1.69	2.44
20	1.35	1.97	1.64	2.38
21	1.32	1.92	1.60	2.32
22	1.28	1.88	1.56	2.27
23	1.25	1.84	1.52	2.22
24	1.22	1.80	1.49	2.18
25	1.20	1.77	1.45	2.14
26	1.17	1.73	1.42	2.09
27	1.15	1.70	1.39	2.06
28	1.13	1.67	1.37	2.02
29	1.11	1.64	1.34	1.99
30	1.09	1.62	1.32	1.95
31	1.07	1.59	1.30	1.92
32	1.05	1.57	1.27	1.89
33	1.03	1.54	1.25	1.86
34	1.02	1.52	1.23	1.84
35	1.00	1.50	1.21	1.81
36	.99	1.48	1.20	1.79
37	.97	1.46	1.18	1.76
38	.96	1.44	1.16	1.74
39	.94	1.42	1.15	1.72

FIGURE 1.9.5.1

RAINFALL INTENSITY (continued)

Time (minutes	Flatland 10	Flatland 100	Hillside 10	Hillside 100
40	.93	1.40	1.13	1.70
41	.92	1.39	1.12	1.68
42	.91	1.37	1.10	1.66
43	.90	1.35	1.09	1.64
44	.89	134	1.07	1.62
45	.87	1.32	1.06	1.60
46	.86	1.31	1.05	1.58
47	.85	1.30	1.04	1.57
48	.85	1.28	1.03	1.55
49	.84	1.27	1.01	1.54
50	.83	1.26	1.00	1.52
51	.82	1.25	.99	1.51
52	.81	1.23	.98	1.49
53	.80	1.22	.97	1.48
54	.79	1.21	.96	1.46
55	.79	1.20	.95	1.45
56	.78	1.19	.94	1.44
57	.77	1.18	.94	1.43
58	.76	1.17	.93	1.41
59	.76	1.16	.92	1.40
60	.75	1.15	.91	1.39
61	.74	1.14	.90	1.38
62	.74	1.13	.89	1.37
63	.73	1.12	.89	1.36
64	.72	1.11	.88	1.35
65	.72	1.11	.87	1.34
66	.71	1.10	.86	1.33
67	.71	1.09	.86	1.32
68	.70	1.08	.85	1.31
69	.70	1.07	.84	1.30
70	.69	1.07	.84	1.29
71	.69	1.06	.83	1.28
72	.68	1.05	.83	1.27
73	.68	1.04	.82	1.26
74	.67	1.04	.81	1.25
75	.67	1.03	.81	1.25
76	.66	1.02	.80	1.24
77	.66	1.02	.80	1.23
78	.65	1.01	.79	1.22
79	.65	1.01	.79	1.22
80	.64	1.00	.78	1.21

FIGURE 1.9.5.1

RAINFALL INTENSITY (continued)

Time (minutes	Flatland 10	Flatland 100	Hillside 10	Hillside 100
81	.64	.99	.78	1.20
82	.63	.99	.77	1.19
83	.63	.98	.77	1.19
84	.63	.98	.76	1.18
85	.62	.97	.76	1.17
86	.62	.96	.75	1.17
87	.61	.96	.75	1.16
88	.61	.95	.74	1.15
89	.61	.95	.74	1.15
90	.60	.94	.73	1.14
91	.60	.94	.73	1.13
92	.60	.93	.72	1.13
93	.59	.93	.72	1.12
94	.59	.92	.72	1.12
95	.59	.92	.71	1.11
96	.58	.91	.71	1.10
97	.58	.91	.70	1.10
98	.58	.90	.70	1.09
99	.57	.90	.70	1.09
100	.57	.90	.69	1.08
105	.56	.87	.67	1.06
110	.54	.85	.66	1.03
115	.53	.84	.64	1.10
120	.52	.82	.63	.99
125	.51	.80	.61	.97
130	.50	.79	.60	.95
135	.49	.77	.59	.93
140	.48	.76	.58	.92
145	.47	.75	.57	.90
150	.46	.73	.56	.89
155	.45	.72	.55	.87
160	.44	.71	.54	.86
165	.44	.70	.53	.85
170	.43	.69	.52	.83
175	.42	.68	.51	.82
180	.42	.67	.51	.81

FIGURE 1.9.5.2

GUTTER TABLE

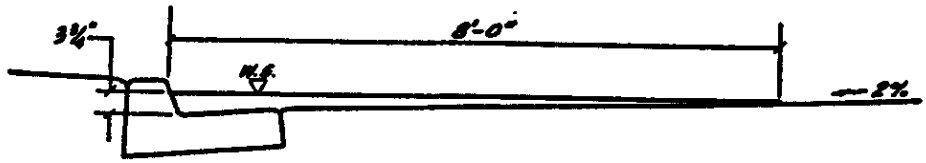

Values For Storm Runoff in Standard Gutter Section
(Maximum Allowable Width = 8 feet, n = 0.015)

STANDARD CONCRETE CURB AND GUTTER TABLE

Values For Storm Runoff in Standard Gutter Section

(Maximum Allowable Width = 8 feet, n = .015)

Ft./ft. S	K x ft. = minutes K	Ft./Sec. V	Ft^3/Sec. Q
.001	.0278	0.6	0.4
.002	.0196	0.9	0.6
.003	.0160	1.0	.07
.004	.0139	1.2	0.8
.005	.0123	1.4	0.9
.006	.0113	1.5	1.0
.007	.0105	1.6	1.1
.008	.0098	1.7	1.2
.009	.0093	1.8	1.2
.010	.0088	1.9	1.3
.015	.0072	2.3	1.6
.020	.0062	2.7	1.8
.025	.0055	3.0	2.1
.030	.0051	3.3	2.2
.040	.0044	3.8	2.6
.050	.0039	4.3	2.9
.060	.0036	4.7	3.2

REQUIRED D-LOADING FOR REINFORCED CONCRETE PIPE

CASE I BEDDING PER STANDARD PLAN 76-01

PIPE SIZE	DEPTH OF COVER IN FEET																											PIPE SIZE
	1	1.25	1.5	1.75	2	3	4	5	6	7	8	9	10	11	12	13	14	15	16	17	18	19	20	21	22	23	24	25	
12																								2250	2250	2250	2250	2250	12
15	2500	2000	2000	2000	2000	2000	2000	2000	2000	2000	2000	2000	2000	2000	2000	2000	2000	2000	2000	2000	2000	2000	2000	2000	2000	2000	2000	2000	15
18																													18
21				1350	1350	1350	1350	1350	1350	1350		1750																	21
24	2250										1500																		24
27		1750	1500										1750	1750	1750	1750	1750	1750	1750	1750	1750	1750	1750	1750	1750	1750			27
30				1250	1250					1250		1500															1750		30
33	2000										1250																	1750	33
36																													36
39	1700	1500	1400																										39
42	1600	1400	1300	1200	1100	1000	1000	1000	1000	1100		1400																	42
45	1500	1300	1200	1100							1200		1500	1500	1500	1500	1500	1500	1500							1700			45
48		1200	1100																	1500		1600		1700				1800	48
51	1400				1000							1300																	51
54	1300	1100		1000						1000															1700	1800	1800		54
57	1200		1000								1100		1400	1400	1400	1400	1400	1400					1600						57
60		1000		900	900				900																				60
63	1100	950	900	850						950																		1850	63
66	1050	900	850									1200	1350	1350	1350	1350	1350	1350								1750			66
69											1050										1500			1650					69
72	1000	850																				1550							72
75	950																		1400										75
78					800	800	800	800	850			1150	1300	1300	1300	1300	1300												78
81	900			800						900										1450								1900	81
84	850		800								1000							1300						1700	1750	1800	1850		84
87		800											1250	1250	1250	1250							1650						87
90												1100					1250												90
93	800																					1600							93
96													1200	1200	1200	1200												1950	96

Unrestricted Trench Width — Calculated for Projection Condition

Trench Width = O.D. + 20", W = 10" (See Note 4) — Calculated for Trench Condition

NOTE:

1. D-Loads shown on this plate are to be used in design and shown on project plans.
2. D-Loads shown are based on average soil conditions and should be increased where soil analysis indicates greater earth loads. Where soils have low cohesive values and cover is greater than 10', use D-Loads calculated for projection condition (Plate 2.6-0697).
3. Data: Safety Factor = 1.25; Load Factor = 1.8 for Case I; Live Load = 1-H20-S16 Truck; Earth Load = 110 P.C.F (Marston's Formula).
4. Where cover is greater than 10', D-Loads shown may be used with Case II Bedding for values of "W" not exceeding the following:
   - "W" = 15" for pipe 48" or less in diameter.
   - "W" = 22" for pipe 72" or less in diameter.
   - "W" = 28" for pipe 96" or less in diameter.

   Where "W" exceeds the above values, D-Loads shown on Plate 2.6-0697, Option No. 1, must be used with Case II Bedding.

FIGURE 1.9.11.1
D-Load for Case 1

FIGURE 1.9.11.2

Gauge Requirements for Corrugated Steel Pipe

GAGES OF C.S.P. FOR H 20 LIVE LOADS
(2-2/3" X 1/2" CORRUGATIONS)

Diam. In.	Area Sq.Ft.	Height of Cover, Ft.												
		1-10	11-15	16-20	21-25	26-30	31-35	36-40	41-45	46-50	51-60	61-65	66-70	71-75
15	1.2	16	16	16	16	16	16	16	16	16	14	14	12	12
18	1.8	16	16	16	16	16	16	16	14	14	12	12	12	12
21	2.4	16	16	16	16	16	16	14	14	14	12	12	12	10
24	3.1	16	16	16	16	16	14	14	12	12	12	10	10	10
30	4.9	14	14	14	14	14	14	12	12	12	10	8	8	8
36	7.1	14	14	14	14	14	12	12	10	10	8	8	8	8
42	9.6	12	12	12	12	12	12	12	12	12	12	12	12	10
48	12.6	12	12	12	12	12	12	12	12	12	12	10	8	
54	15.9	12	12	12	12	12	12	12	12	12	10	8		
60	19.6	10	10	10	10	10	10	10	10	10	8			
66	23.8	10	10	10	10	10	10	10	10	10	8	Use Field Assembled Plate Culverts.		
72	28.3	10	10	10	10	10	10	10	10	8				
78	33.2	8	8	8	8	8	8	8	8	8				
84	38.5	8	8	8	8	8	8	8	8					

GAGES OF C.S.P.-ARCH FOR H-20 LIVE LOADS
(2-2/3" X 1/2" CORRUGATIONS)

Span In.	Rise In.	"B"* In.	Area Sq.Ft.	Height of Cover, Ft.				
				1	2-4	5-9	10-15	16-20
18	11	4 1/2	1.1	16	16	16	16	16
22	13	4 3/4	1.6	16	16	16	16	16
25	16	5 1/4	2.2	16	16	16	16	16
29	18	5 1/2	2.8	14	14	14	14	14
36	22	6 1/4	4.4	14	14	14	14	14
43	27	7	6.4	12	12	12	12	12
50	31	8	8.7	12	12	12	12	10
58	36	9 1/4	11.4	10	12	12	10	10
65	40	10 1/2	14.3	10	12	12	10	8
72	44	11 3/4	17.6	8	10	10	8	

MINIMUM COVER OVER C.S.P.

Load	Surface	Base of Measurement	Pipes	Pipe-Arch
H 20	Unpaved Flexible Pavement	Top of Surface	D/5 or 5" Min.	9"
	Rigid Pavement	Top of Slab	D/7 or 3" Cushion Under Slab	Span/14 or 3" Cushion Under Slab
E 72	Railroad Track	Bottom of Rail	D/2 or 18"	Span/2 or 24"

* NOTE: Span of Pipe-Arches is measured "B" inches above invert.

SECTION 2
ARCHITECTURAL DESIGN STANDARDS

2.1 GENERAL

2.1.1 Correlation and Coordination

A. This section provides standards for Architectural design. The Construction Specifications, Volumes I through IV, other and sections of these Facility Design Standards contain requirements that will affect the Architectural design, so it is imperative that the Architect thoroughly review the entire Facility Engineering Standards.

B. The Architectural Design Standards are incomplete without the information contained in the following related documents

1. The General Design Standards contain additional design requirements that affect all disciplines

2. Appendix K contains requirements for the overall scope and delivery of design services.

3. The Interior Finish Standards contain a list of acceptable finish materials and colors. These finishes are further described in applicable Specifications sections.

4. Design and construction drawings shall comply with Section 11, Drawing Procedures.

C. The following standards are under revision and are not current

1. Section 12, Interior Development Design Standards

2. Appendix A, City Building Permit Requirements

3. Appendix B, Information for Architectural/Engineering (A/E) Firms

4. Appendix C, Interior Space Guidelines

5. Appendix F, Architectural Review Board (ARB) Policies and Procedures (for project submittal requirements)

6. Appendix I, Plant 1 Color Standards and Signage

D. The design shall be fully coordinated with other engineering disciplines to eliminate conflicts and omissions, and to ensure that the total project requirements are met. Design solutions must be validated and coordinated with LMSSC organizations and stakeholders.

E. The list of deliverables at each design review is included at the end of this section.

2.1.2 General Design Considerations

A. Architects working at LMSSC Bay Area must be fully knowledgeable of the Facility Engineering Standards and work within their guidelines and procedures, must solicit and accept guidance from LMSSC staff Architects, and at the same time seek to provide fresh approaches, techniques and materials in the design of projects.

B. All designs shall consider aesthetics as well as function and maintability, following established architectural principles and professional practices. Designs shall ensure that the maximum benefit is obtained for the costs expended, however, safety, reliability and durability shall not be compromised as a cost saving measure. Costs and benefits shall be considered at all stages of design and construction.

C. Leased buildings may be designed with materials and systems life spans equal to the life of the lease.

D. Asbestos and lead/cadmium results shall be shown on 60% drawings, using notes, plans, matrices or other method, depending on complexity of project. The purpose of including the test results is so that the Contractor will have sufficient information on what materials are hazardous and to determine abatement costs. The Architect may include a disclaimer that they are not responsible for the correctness of the information shown. The test results shall not appear on drawings that are submitted to the AHJ for permit.

2.1.3 Standard Details

A. The Architectural standard details in the Facility Engineering Standards illustrate graphics and detailing for specific items intended to be consistent from project to project. For general detailing, the Architect shall use their office standard details or develop project specific details.

B. Where standard details apply, they do not need to be copied to the drawings in the LMSSC format. The Architect can draw a detail that conforms to the minimum requirements shown on the standard detail.

2.1.4 Architectural Review Board

A. The LMSSC Architectural Review Board (ARB) is a multi-disciplinary team intended to insure a consistent and high-quality appearance for all projects.

B. All exterior modifications including new buildings, additions, repainting, new exterior equipment, utilities, signage and similar work, shall be presented for review. No exterior modifications shall be released for review by outside agencies without ARB approval.

C. All interior appearance elements and color and finish selections shall be presented to and approved by the ARB.

D. The ARB is not a technical review and does not review layouts, code compliance, detailing and other design aspects requiring professional Architectural review.

2.1.5 Design Checklist

A. Obtain a current design checklist from the LMSSC Project Architect or Engineer. The checklist contains a list of items of concern identified from other projects that could be

applicable to the current project. The Architect shall complete the checklist and include and update at each design submittal.

2.2 PRE-DESIGN SERVICES

2.2.1 Programming

A. The extent of programming required will depend on the size and complexity of the project.

B. A list of spaces, design requirements, equipment and other needed features of the design are included in the LMSSC provided Statement of Work (SOW). This should be considered to be a preliminary list of requirements known at the time the initial budget goal was established. During the programming phase, these requirements shall be verified and expanded in consultation with the LMSSC project team.

C. At the completion of the programming phase, the Architect shall issue a Basis of Design (BOD) written document. The Architectural portion of this document shall include a description of the spaces and rooms required, their areas, functions, adjacencies, headcount, equipment and other characteristics.

D. Finishes for each space should be listed and desirable design features identified.

E. The BOD shall include a code analysis of what changes need to be made to the building and area for accessibility, exiting, and other code requirements. Restrooms to be upgraded shall be identified.

F. The Architect shall survey the area to determine its suitability for the intended function, and to identify problems and risks that need to be mitigated. For instance, sources of noise and vibration that could interfere with operations should be identified.

G. During the development of the BOD, the Architect shall begin verification of existing building conditions, dimensions, and availability of suitable record drawings, per Verification of Field Conditions below. Discrepancies should be noted in the BOD.

H. The BOD shall contain a list of assumptions and items that still need to be resolved. The assumptions listed may include assumptions and clarifications that were included in the initial proposal to perform design services.

2.2.2 Verification of Field Conditions

A. LMSSC master architectural drawings may have inaccuracies because of errors in conversion from original drawings to CAD, as well as in subsequent incomplete as-builting of projects. The Architect shall identify and correct these deficiencies based on field survey within the project area, so that completed drawings are fully detailed and accurate, within the project area, for both new existing construction.

1. Early in the development of design, the Architect shall compare the existing master CAD drawing files of the area with images of original pencil construction drawings, adding missing section and detail references, and noting any differing wall locations and thicknesses. To avoid confusion, added references for existing construction may be placed on layers that are screened or turned off on construction drawings.

2. The Architect shall make field visits as required to verify existing conditions to remain, including room dimensions, wall thicknesses and exact door locations. Walls shall be measured from column centerlines, exterior walls, and similar fixed reference points.

3. Existing construction shown on the design drawings shall be corrected prior to the 30% design submittal.

B. During the construction of the project, before ceiling board is installed, the Architect shall visit the project site to verify the installed location of the ceiling grid, and locate lights, HVAC grilles, sprinkler heads and other ceiling mounted items. The Architect shall note the location of the walls in reference to the ceiling grid, to verify that new and existing walls are accurately located on the drawings. The Architectural construction drawings shall be corrected per field observation and reissued prior to the Facility Project Acceptance Inspection.

2.2.3 Code Analysis

A. Design work shall comply with the latest adopted edition of all applicable city, county, state and federal codes, regulations and standards. The Architect shall identify regulations that have been published but not yet adopted, and when approved by the design team, shall design per the newer regulation. Applicable recommendations of related trade and professional associations shall also be considered.

B. Prepare a written code analysis verifying and supplementing information on the building cover sheet, listing assumptions and potential issues of non-compliance. Include parking requirements.

C. Prepare an exiting plan including, but not limited to, the following elements

1. A plan of the building, showing and identifying components of the path of egress to the exterior ground level of the building. Identify rated corridors, interior exit stair enclosures, exit access stair enclosures, exit passageways, and horizontal exits, including fire rating.

2. Identification of the construction of each egress component by the nomenclature used in the Building Code, for example, 1-hour fire partition, 1-hour fire barrier

3. Size, occupant load factor and occupant load of each space, and cumulative occupant load.

4. Egress paths, including indication of most remote points from an exit, with annotation of critical exit distances.

5. The Common Path of Egress Travel (CPOT) component of the egress path, indicating the distance occupants have to go before reaching a point where they can choose between two separate, distinct and properly separated exits.

D. Special Concerns

1. Designers should take special note of code changes between the original design code the building was built according to and the current code.

2. Local jurisdictions may not check CPOT, but exiting must comply with this provision. LMSSC interprets the maximum CPOT distance to apply even when two exits are not otherwise required.

3. The City of Sunnyvale has, in some instances, required that existing rated corridor systems need to be maintained, even if not strictly required by current code.

2.3 BUILDING DESIGN

2.3.1 Building Shell

A. The design of the exterior shall balance aesthetic considerations with cost, durability and low maintenance. Materials shall be selected to harmonize with the site and surrounding buildings.

B. Building design shall follow LEED principles to the extent possible within security and functional constraints.

C. Parapets shall be provided for new buildings and additions, to provide fall protection for maintenance access and to screen equipment. Parapets shall be code required height for fall protection in relation to highest adjacent roof level. See Hazards of Slips, Trips and fall below.

D. New pipes, conduits and ducts at exterior locations, for example, on the face of building walls, shall be placed in inconspicuous locations and painted to match the building. Such items shall be screened when they detract from the appearance of the building. In addition to screening requirements imposed by regulatory agencies, new roof mounted equipment visible from surrounding streets shall be painted to match the building or as directed by the Architectural Review Board.

2.3.2 Roof

A. Sloped roof decks shall be used rather than tapered insulation to achieve roof drainage. Minimum slope shall be 1/4 inch per foot, or as required by code.

B. Skylights shall be considered where roof openings are allowed by Security. Skylights shall be protected by guardrails or structural screens as required for fall protection for unprotected floor openings.

C. All roof mounted equipment, ducts, vents and pipes shall be screened from public view to their full height, except as approved by the ARB.

D. On all projects where roof mounted equipment is installed, the Architect shall carefully assess the stairs, ladders and hatches leading to the roof for safety and compliance with V2-505 Standard Ladder Details and OSHA standards.

E. On all projects where roof screens are required, the Architect shall provide removable panels in roof screens or other form of access to allow large objects to be craned onto the roof behind the screen for future maintenance of equipment Column number shall be marked on all roofs to allow for clear and quick communication.

F. Provide walk pads on all roofs to designate safe walk paths around equipment, obstructions, etc.

G. Provide telephones for emergency communications on roofs were 2 way radios, 2 way pagers and mobile phones are prohibited.

H. Aluminum or steel construction cross overs shall be provided over large equipment, pipes and conduits too wide to step over, and other similar obstructions to provide safe access. Crossovers shall comply with CCR Title 8 for stairs and handrails. Later supports are required for crossovers that have a potential of tipping or moving. FO&S Engineering and ESH shall be consulted for review and approval.

I. 2.3.3 Roofing System

A. The choice of roof will be determined on a project by project basis, but should be chosen on the basis of long, life, durability, and maintainability. For any significant structure, a 30 year no-dollar-limit warranty is required.

B. Re-roofing is generally accomplished by the application of an acrylic fluid applied system. The City of Sunnyvale has considered this type of system a maintenance coating rather than a re-roof.

C. Overlay re-roofing is allowed, provided the total weight of the existing and new roofing, (including insulation and fasteners) does not exceed 85% of the calculated dead load structural allowance for the roofing material.

D. Where overlay re-roofing is to be used, ponding conditions, defined as areas where water stands for more than 36 hours without a supply source, shall be corrected to provide positive drainage.

E. Existing wood crossovers, sleepers, and deficient equipment supports shall be replaced during re-roofing. Damaged pipe insulation shall be repaired, and duct insulation coverings re-waterproofed.

2.4 OTHER DESIGN ELEMENTS

2.4.1 Ladders

A. For general ladder configuration, refer to Standard Detail V2-505. This detail is intended for general design guidance and is not to be used on construction drawings without modifying and adapting to project conditions. Note: Ensure review and approval of all fixed ladder designs and modification by ESH.

B. The climbing height of fixed ladders, including offset ladders with intermediate landings, shall be measured from the lowest access point to the uppermost landing level. A cage shall be provided for all fixed ladders where the highest rung or platform is 20 feet or more above lowest access point, even if the ladder is provided with intermediate landings, and even if the distance between the landings is 20 feet or less.

C. On fixed ladders, the perpendicular distance from the center of the rungs to the nearest fixed object on the climbing side shall be 30 inches where the pitch is 90 degrees, except for cages that conform to CCR Title 8 3277(g)(5).

D. The top rung of ladders at roof hatches shall be at the level of the adjacent roof.

E. Provide spring loaded swing gates at the top landings of all ladders. Provide guardrail around all roof hatches with spring loaded swing gate and handholds for climbing.

2.5 INTERIOR DESIGN

2.5.1 Walls

A. Walls shall be standard construction, 3 5/8 minimum stud size with 5/8 minimum gypsum board finish. Walls shall terminate above the ceiling, or where required, shall extend to deck above. Provide acoustic batts full depth of studs on all walls.

B. Note that the Construction Standards specify smooth wall finish. Where existing walls to remain are textured, obtain clarification from the LM Architect whether existing walls are to be re-finished.

C. In office areas, wall mounted items such as fire extinguisher cabinets, emergency response and other cabinets shall be recessed or semi-recessed into wall.

D. Special consideration shall be given to security construction requirements. Security walls shall be identified on the plans. Detailing of security walls shall follow standard details.

2.5.2 Ceilings

A. Standard suspended ceiling grid systems and ceiling board are listed in the Construction Specifications.

B. Ceiling heights for open office areas shall be between 10 feet to 12 feet, depending on the size of the room.

C. The Architectural Reflected Ceiling Plan shall govern the placement of all grilles, diffusers, light fixtures, fire sprinkler heads and other ceiling installed items, which shall be shown on the plan.

2.5.3 Doors

A. If existing doors are not replaced, and the LMSSC Architect does not direct the doors to be painted, the drawings shall note that the doors are to be sanded down and refinished.

2.5.4 Circulation

A. The minimum corridor width is 5 feet but 6 feet is preferred. Widths shall be determined by occupant load and type of traffic, i.e., personnel, carts, fork lifts, etc., and clearances required for the moving of equipment. In order to minimize obstructions to traffic, columns at corridor walls shall be recessed flush with wall, with any offset on the non-corridor side.

B. Windows shall be provided in entry doors to open office areas and industrial areas, to lessen the hazard caused when two occupants are attempting to open a door from opposite sides. Note that windows are generally not allowed in secure areas.

C. Access Control and Alarm System (ACAS) card readers required for control of access doors shall be placed away from the direct swing of the door so that a person using the card reader will not be struck by an opening door.

2.5.5 Security Design

A. Certain facilities are subject to security design standards and requirements. Specific requirements are contained in Section 6, Security Design Standards. The Architect shall consult with the Security representative throughout the design. The following issues generally affect the Architectural design of secure spaces.

B. Areas designated as Secure Compartmented Information Facilities (SCIF's) are required to have floor to floor perimeter walls, with all openings over a minimum size protected by security bars. There is usually only one entry door to a SCIF, which is provided with a dial combination lock and card reader. Other doors will be exit only.

C. SCIF walls and other walls within the SCIF may require an STC rating, and shall be constructed per the Facility Engineering Standards standard details. Conduits and junction boxes are not allowed to be concealed within STC rated walls, but are allowed to be concealed by an additional layer of furred-out drywall applied to the surface of the STC wall. Sound masking is usually required at penetrations of SCIF walls.

D. Conference rooms and other rooms within SCIF's that use a speaker phone or other amplified sound but meet security STC requirements.

E. It is generally allowed to conceal conduits within walls interior to a SCIF when they are not required to be sound rated.

2.5.6 Specialty Rooms

A. Toilet Rooms

1. Refer to the Interior Finish Standards for toilet room visual design guidelines, standard elevations, and finish materials. Wall tile shall be installed from floor to ceiling. Provide continuous lighting above toilets and urinals, recessed light troughs preferred. Partitions shall be ceiling hung, Thresholds shall be marble.

2. Toilet rooms shall be designed with sufficient space for accessories, so that clearance for the use of fixtures and accessories is not encroached upon. Toilet room plans shall show paper towel dispensers and waste receptacles, starting from the preliminary design, in order to ensure that sufficient space is provided. Special care shall be taken with "protruding objects" in the accessible route.

3. Provide counters and shelves for temporary placement of folders and paperwork away from sinks and wet areas. Provide recessed tile shelf above urinals.

4. Entry and egress from restrooms shall maintain visual privacy from adjacent spaces.

5. Provide automatic door openers at toilet room entry doors.

6. All lavatories shall be provided with height and clearances required for disabled access. A standard lavatory shall be used as the handicapped accessible lavatory. Pipe insulation shall be preformed.

7. Toilet fixtures and accessories shall be as specified in the Construction Specifications. Soap dispensers, toilet tissue dispensers and large floor model waste bins are typically provided by Custodial Services. There is no requirement for feminine product dispensers.

8. Wheelchair accessible stalls shall be provided with side by side compact roll dispensers directly beneath the grab bar, so as not to impede the use of the water closet and grab bar. Other stalls shall be provided with bulk roll dispensers.

9. Electric hand dryers shall be provided at all new and remodeled toilet rooms, and shall be the primary hand drying means. Provide semi-recessed powered paper towel dispensers as a secondary means of hand drying.

B. Conference rooms

1. These requirements apply to all enclosed rooms intended for groups to meet, whether designated conference room, teaming rooms, breakout rooms, or other designations. Determine the exact function and requirements of each such room during the programming phase. Refer to Security Requirements above for special requirements in secure areas.

2. Conference room design must be carefully coordinated with Audio Visual (A/V) design requirements. The LMSSC internal A/V Group will specify A/V equipment to be installed by a third party vendor hired by LMSSC. The A/V group will provide the Architect with specifications of equipment, and design guidelines for power and conveyances needed for AV equipment. The A/V requirements will generally not be developed until the schematic design has been accepted by the users of the area, and a needs assessment for A/V has been completed.

3. Where feasible, conference room walls should extend from deck to deck and have sound batts to above ceiling level. Where a director or VP office is adjacent to a conference room, provide a minimum 50 STC full separation wall.

4. Provide chair rails at conference rooms along walls where chairs are intended to be placed. In general, a stainless steel chair rail per the Standard Details is used, but wood chair rails may be used where approved by the ARB.

5. Where required, include acoustical wall panels, or special wallcover that allows whiteboard markers to be used.

6. Conference rooms require special lighting and light switching. The lights near projection screens and monitors require separate switching. Refer to Audio Visual requirements for additional requirements.

7. Trench concrete floors to conference tables for power, telecom and data conduits. Assume that each table leg will require a trench. Conduits are generally terminated in a hollow table leg. Concrete filled metal decks have been successfully trenched on a number of projects.

C. Offices of Directors and Vice Presidents

1. Follow the same design requirements for sound attenuation, A/V requirements and trenching to tables as for conference rooms.

D. Kitchenettes

1. Kitchenettes shall be provided with built-in cabinets. Sinks will not be provided unless specifically required.

2. The area immediately adjacent to the kitchenette counter shall be provided with resilient flooring in order to minimize wear and soiling of carpets.

3. Include a place for recycle bins provided by LMSSC. Where required, design built-in recycle bins.

4. Water dispensing units will be provided by LMSSC. They shall be shown on the drawings with required electrical power and water supply. If filtration tanks are to be supplied with unit, provide a location in cabinetry.

5. The drawings shall include a kitchen equipment list including refrigerators, coffee makers, and other items determined during programming.

E. Computer Rooms

1. Computer rooms are rooms that house data processing operations or equipment vital to LMSSC business. Computer rooms shall be isolated from adjoining spaces by one hour vertical and horizontal occupancy separations, as required by applicable codes.

2. Plywood equipment and telephone backboards used in these rooms shall be fire-retardant treated.

F. Integrated Wiring Center (IWC Room)

1. Refer to Section 9, Telecommunications Design Standards, for minimum size and finish requirements for IWC rooms.

2. The IWC room requires full height walls, a dedicated HVAC system that operates 24-7, and card reader access. It should not have a ceiling, and should be provided with ESD flooring. Telecomm racks are installed in the IWC by an LMSSC vendor, but bracing of the racks is by the Construction Contractor, and should be part of the design.

3. Depending on the criticality of the IWC room, it may require Facility Maintenance Alarm (FMAS) monitoring for over-temperature in room, and condensate pan water level. It is preferred that fan-coil units serving the room are located in corridors or adjacent areas, and ducted to the room, so that failure of condensate pumps will not cause water leakage into the IWC room.

2.5.7 Finishes

A. Finishes shall be selected from the Interior Finish Standards and Construction Specifications.

B. The Architect shall obtain approval from the ARB for specific locations and patterns of accent colors and materials. The ARB will not select finishes, so presenters should come prepared with a coherent design, and be prepared to justify the design and present alternatives. The use of colored 3-d sketches and renderings is preferred as a presentation tool. Full size loose samples shall be presented rather than fixed color boards.

C. Limited use of wall accent colors is encouraged, to provide visual interest and focus, and to assist in orienting users to the space, but shall not be overdone. In general, one wall of an office or conference room will be in an accent color, placed so it is

visible through the room entry door. High-use areas such as kitchenettes may feature brighter accent colors. Columns are generally painted in a distinctive accent.

D. In general, flooring in lobbies will be ceramic tile, with carpeted seating areas. Flooring in corridors and high-traffic areas will be resilient flooring. Offices will be carpeted

E. Resilient flooring in industrial areas and service rooms shall standard VCT as specified in the Construction Specifications, not from the Interior Finish Standards

F. Flooring material transitions at door thresholds shall be approved by the LM Architect based on the materials and use of the door, and may consist of metal or stone threshold, reducer strip or other appropriate means.

G. Transition of carpet to resilient flooring in lobbies and office areas shall use a metal Schluter-type trim so that carpet and flooring are flush.

2.5.8 Signage

A. Develop a complete signage schedule for each project. The schedule shall include all code required signage, signage to identify hardwall rooms, safety signage, loading signage, and any miscellaneous signage required by the project. Indicate sign size, text, and style. The schedule shall indicate whether signage to be provided by contractor or by owner.

1. Typical sign details are provided in the Interior Signage Standards at the Engineering Document Center website. Toilet room signs hall be mounted at 60 inches to centerline. Other signs shall be mounted at 60 inches to the top of sign for uniformity, while ensuring that tactile elements are within the code required height range.

2. Signage mounted on cubicles will be provided by LMSSC unless otherwise directed by the project team.

3. Refer to the Construction Specifications for a list of signage generally required for code compliance. Different styles of sign for office and industrial areas are called out in the Construction Specifications. Specify the correct style of signage for each type of area.

4. Evacuation maps holders shall be included in the design, in locations required by the Fire Code. Map inserts will be provided by LMSSC. Map holders for industrial areas shall be per the Standard Detail. Holders in lobbies and offices shall be the modular type. Refer to Construction Specifications

5. Determine what OSHA and ESH signage is required and include in the schedule.

6. Include design load signage per criteria below.

B. Posting of Design Loads

1. The maximum load in pounds per square foot shall be posted in every building or portion thereof, where industrial or manufacturing work are performed on the following areas: platforms, equipment pit covers, raised floors, plates, grates, trenches, floors above ground floor, and industrial storage rooms.

2. The maximum load in pounds per square foot shall be posted in every office area above ground floor where there is a possibility of overloading, (e.g., areas requiring the concentrated placement of personal safes, high density storage units, files taller than 6 ft., etc.).

3. These signs shall be securely affixed in a conspicuous place (e.g., top of stairs, elevator doors, near room entry, etc.) in each space to which they relate. Existing signs shall be replaced where they have been removed, defaced or are deteriorated.

C. Column Indicators

1. All columns in Plant 1 and Plant 5 buildings shall be identified by column indicators identifying floor and column, (example - 2H3). Walls concealing columns shall also have indicators. New indicators shall be applied when an area is repainted, or if existing indicator in the area of work is missing or in poor condition. This includes roof also.

D. Floor Markings – Indicate locations of floor marking tape on the plans

1. Yellow: Used to outline areas to “Keep Clear”, such as in front of electrical panels, disconnect switches, etc. As well as to mark physical hazards such as fall hazards and trip hazards.

2. White: Used in manufacturing or industrial areas to outline permanent aisles, passageways, and operational limits.

E. Building and Site Signage – The design shall include exterior signage as required. Standard building number signage mounted on walls of buildings shall comply with V2-958. Free-standing monument signs and specialty exterior are controlled by LMSSC corporate standards, and are generally designed and installed by a third party sign vendor.

2.5.9 FURNITURE

A. Preliminary design of moveable office partition systems is included in the Architectural design. Coordinate with the LMSSC furniture vendor. On larger projects, where the partition design is integral to the overall design, the Architect shall provide the initial design, and the furniture vendor will subsequently provide a detailed partition layout. For smaller projects, the furniture vendor may provide the design, to be validated by the Architect. The construction drawing backgrounds shall include the furniture vendor’s layout, as needed for coordination.

B. The furniture vendor will determine the location of power and data poles in coordination with the Architect and project team. The poles shall be shown on the Architectural reflected Ceiling Plan.

C. Coordinate with the furniture vendor for the location of underfloor conduits routed to tables.

2.6 HAZARDS OF SLIPS, TRIPS AND FALLS

A. Slipping on wet floors has caused a number of falls and near misses. Flooring shall have a wet Coefficient of Friction (COF) equal to or greater than 0.6 on level surfaces and 0.8 on ramps, with the flooring finish applied. Areas of special concern include lobbies where

people with footwear wet from exterior conditions enter the building, mechanical rooms where leaks may occur, and hallways and toilet rooms that require regular wet cleaning.

B. High-use entry stairs such as those leading from main lobbies to office areas, and stairs near elevators, shall be designed with shallower risers and longer treads than allowed by code, for example 6 1/2 riser and 12 ¼ tread. This also applies to exterior stairs exposed to the weather.

C. The tread of all stairs shall be proportional to the riser as determined by a stair design table. For instance, when the riser is less than the 7 inch maximum allowed by code, the tread will be greater than the 11 inch minimum. As a quick rule of thumb the depth of the tread plus twice the height of the riser should total 25 inches, or 2R + T = 25.

D. Handrail extensions as required for stairs and ramps by accessibility regulations: the required minimum extension as shown on the drawings shall include the straight portion of the extension only, not the curved portion that returns to the wall or floor.

E. Maintenance access to roofs and other elevated locations shall, wherever possible, be by stair. Maintenance stairs shall conform to CCR Title 8 Section Fixed Industrial Stairs. In all cases where ladders are being considered for maintenance access, Plant Operations & Services management and ESH shall be consulted for review and approval.

F. Parapets for new buildings and additions shall at a minimum be at least the height (i.e. 42” - 45” high) required for guards at the highest point of the adjacent roof. This will provide fall protection that may be required for equipment and roof maintenance, and will serve to screen equipment.

G. The Architect shall coordinate the work of other disciplines to ensure that no equipment or controls are located in proximity to unguarded elevated locations. Comply with Building Code requirements that all items requiring servicing or adjustment be at least 10 feet from an unguarded edge. Guards shall extend at least 6 feet beyond the end of equipment. The normal travel route from roof access points to equipment shall be at least 10 feet from unguarded roof edges.

H. Sections of pipes and conduits that are in a potential pathway shall be painted red to increase visibility so as to prevent tripping.

2.7 PERMIT REQUIREMENTS

A. All required copies of the 100% design issue of all architectural drawings, details, specifications and Title 24 calculations shall be signed and stamped by an Architect licensed in the State of California.

B. A Plan Check/Permit Application Notification Form shall be completed and submitted within three days of submittal for plan check. Refer to Appendix B.

2.8 Deliverables at Each Design Phase

A. 0% Basis of Design (BOD), at completion of Programming

1. Program of spaces

2. Architectural requirements from the Statement of Work (SOW), verified and expanded during the programming phase of the project.

3. Code analysis. Include City meeting minutes.

4. Assumptions and constraints

5. Design checklist

6. Long lead Items

B. Schematic Design, showing approved Architectural design concept

1. Updated BOD

2. Dimensions and notes from field verification of existing drawings

3. Completed floor plan, including preliminary office partition plan

4. Exiting plan, including cumulative occupant loads

5. Survey of toilet rooms and list of required upgrades

6. For additions and new buildings, building sections and exterior elevations as required, approved by LMSSC ARB

C. 30% Construction Drawings

1. Drawings updated per comments from previous reviews.

a. Basic Preliminary Construction Drawings

b. Cover sheet with verified and updated building data, code data, parking, etc., verified standard notes

c. General Notes, Abbreviations, etc.

d. Site Plan, disabled access plan, updated exiting plan

e. Floor Plan complete with furniture, equipment and fixtures. Fire rated and STC rated walls called out. Security perimeters identified where applicable.

f. Reflected Ceiling Plans

g. Interior elevations

h. Exterior Elevations, as applicable. Screening for roof and ground mounted equipment.

i. Building Sections with finished floor levels, as applicable

j. Updated list of Long Lead Items

2. LEED Checklist, if applicable
3. City meeting minutes.
4. List of supplemental specifications
5. Preliminary Finish Materials for interior and exterior
6. Preliminary Door and Frame Schedule
7. Furniture layouts

A. 60% Construction Drawings

1. Asbestos and lead/cadmium results
2. Drawings and specifications updated per comments from previous reviews
3. All plans, sections, and elevations complete
4. Finish drawings as approved by ARB.
5. Wall types and wall type legend
6. Completed door, frame and hardware schedule
7. Supplemental Specifications

B. 90% Construction Drawings

1. Fully detailed construction documents and specifications, updated per comments from previous reviews. It is intended that the drawings are ready to be issued for construction with the completion of LMSSC correction comments.

C. 100% Complete, Issued for Bid

1. Drawings incorporating review comments from the 90% submittal.

D. Final Permitted Drawings, Issued for Construction

1. Final drawings as approved by the AHJ, incorporating Addenda and any LMSSC comments from the 100% review.

END OF SECTION

SECTION 3
STRUCTURAL DESIGN STANDARDS

3.1 GENERAL

3.1.1 Correlation and Coordination

A. This section provides standards for the Structural design work. These design standards shall correlate with the current edition of Lockheed Martin Missiles & Space (LMMS) Facility Engineering Standards (FES), Construction Specifications, Volumes I through IV, and other relevant sections of this Facility Design Standards. Where applicable, the Engineering Construction Details delineated in the FES Construction Specifications, shall be used for compatibility to LMMS existing facilities design.

B. The Structural design work shall be designated under the current Construction Specifications Institute (CSI) format.

C. The design shall be fully coordinated with other related architectural and engineering disciplines to eliminate conflicts and omissions, and to ensure that the total project requirements are met. Prudent judgment must be exercised in collaborating design solutions with LMMS organizations and personnel.

D. All design/construction drawings shall follow LMMS drawing procedures and standards, unless specifically described otherwise in specific Sections of this Facility Design Standards. Refer to Section 11, Drawing Procedures for all drawing requirements.

3.1.2 Design Philosophy

The design shall be done in a manner to assure that the maximum benefit is obtained for the costs expended. Safety and reliability shall not be compromised as a cost saving measure. The methods of analysis and design shall follow established principles of professional engineering practices. Value Engineering is encouraged during the development of the design work.

3.1.3 Codes and Standards

Design work shall comply with the current adopted edition of all applicable city, county, state, and federal codes and standards. In addition, the current adopted edition of the following codes, standards and publications, are considered as the governing references to this section. Applicable recommendations of related trade and professional associations not listed here shall also be considered.

American Concrete Institute (ACI)
American Institute of Steel Construction (AISC)
American Institute of Timber Construction (AITC)
American Iron and Steel Institute (AISI)
American National Standards Institute (ANSI)
American Society for Testing Materials (ASTM)
American Welding Society (AWS)

California General Industrial Safety Orders (Cal/OSHA)
Crane Manufacturers Association of America (CMAA)
International Conference of Building Officials (ICBO)
Local Municipal Codes
Monorail Manufacturers Association (MMA)
National Design Specifications for Wood Construction (NDS)
Occupational Safety and Health Administration (OSHA)
Steel Joist Institute (SJI)
US Army, Navy and Air Force Design Manuals

3.1.4 Related Code Requirements

A. Differing Specifications

Where two or more codes relate to the same type of specifications, use the most stringent specifications.

B. Structural Steel

The design of structural steel shall be in accordance with the UBC and the AISC Manual of Steel Construction. Unless otherwise instructed, use ASTM A36 structural steel as the basic material. Steel pipes and tubes shall have a minimum yield strength of 35 ksi.

C. Welding and Bolting

Welding shall conform to AWS Structural Welding Code, D1.1. Unless incompatible with the structural steel material, use E70XX electrodes. Common bolts shall conform to ASTM A307. High strength bolts shall conform to ASTM A325, A490, or other as noted. Expansion anchors and similar fasteners shall be designed based on allowable stresses from ICBO reports assuming special inspection or testing will not be provided at the job site.

D. Reinforced Concrete

The design of reinforced concrete shall be in accordance with the requirements of the UBC, ACI 318 and other relevant ACI publications. Unless otherwise instructed, use the following material properties for design:

1. Structural and foundation concrete shall have a 28 day minimum ultimate compressive strength of 3,000 psi.

2. Reinforcing steel bars shall conform to ASTM A615 Grade 60 for #4 bars and larger, and ASTM A615 Grade 40 for #3 bars and smaller.

3. Steel Welded Wire Fabric (WWF) reinforcement shall conform to ASTM A185.

E. Masonry

The design of masonry structures shall be in accordance with the requirements of the UBC. The design shall use allowable stresses consistent with construction without “Special Inspection”.

F. Aluminum

Unless stated otherwise, structural aluminum sections shall consist of heat-treated wrought aluminum alloy Designation 6061-T6, having elastic modulus E = 10,000 ksi. Connections may be welded, bolted, or riveted. Restrictions apply to each method of attachment. Paint aluminum if severe exposure conditions occur. Paint contact surfaces where bearing against dissimilar metals, concrete or masonry.

G. Timber

The design of timber structures shall be in accordance with the requirements of the UBC.

H. Safety

All design shall conform to the safety requirements of OSHA and Cal/OSHA.

I. Testing

A testing laboratory will be retained by LMMS to inspect all welding, high strength bolting and reinforcement placement. It also performs concrete slump and compressive tests and other services. Complete Requirements/Specifications and Checklist found in Appendix E of these Design Standards. Indicate items on drawings where testing services are required.

3.1.5 Design Review Process (Requirements & Deliverables at Each Design Phase)

A. 0% Pre-Design Concept

1. Assumptions and Constraints
2. Schedule of Deliverables
3. Schedule of Pre-purchased Equipment
4. Requirements

B. 30% Design Review Requirements

1. Include all comments & requirements from all previous reviews.
2. Bill of Materials (complete with manufacturers)
3. Completed Site Investigation by Design Engineer
4. Cut Sheets of Proposed Equipment
5. Preliminary Schedule
6. Concept of Structure and Foundation
7. LEED Checklist, if applicable
8. Identify all long lead items.
9. Identify any preliminary meetings with city.
10. Identify code, government, and municipal requirements.

11. Identify supplemental specs.

C. 60% Design Review Requirements

1. Include all comments & requirements from all previous reviews.
2. Structural Layout
3. Structural Drawings
   a. General Notes
   b. Foundation Plan
   c. Framing Plan
   d. Sections
   e. Details
4. Updated Schedule
5. Supplemental Specification Requirements
6. Specifications shall be substantially complete.
7. A detailed testing and inspection section.
8. Design scope of work shall be locked in.

D. 90% Design Review Requirements

1. Include all comments & requirements from all previous reviews.
2. Any changes to the project requirements at this stage must be made by Lockheed Martin.
3. The effort between the 60% and the 90% submittal should be primarily drafting and issue resolution.
4. Contractor shall submit a comprehensive risk plan and formal cost proposal
5. Structural Calculations
6. Updated drawings showing incorporated elements from the project engineering review
7. Updated Schedule

E. 100% Complete/ Issued for Construction

1. Submit a complete full size set of project design documents and specifications for final approval and sign off.

2. Submit 100% package electronically per established procedure.

3. Provide bidding and permitting documents as required.

4. At the end of the bid period update the drawings and specifications to include all Addenda. These documents shall be the contract set. Submit 8 half size sets to Lockheed Martin Team.

5.

F. After Issued for Construction

1. Any design changes, substitutions, and modifications must be submitted to the project engineering team for approval.

3.2 LOADS

3.2.1 Dead Load

Dead load is the weight of the structure or vessel, foundation, mechanical, electrical and process equipment, apparatus, piping, refractory lining, fireproofing, insulation and other permanent attachments.

3.2.2 Live Load

A. Live load is the load produced by personnel, movable equipment, tools, and other items placed on the structure but not permanently attached to it. The minimum live load values for the following situations are given below:

1.	Manufacturing area ground floor slabs	500 psf or a single 5,000 lb. load applied to an area 1 foot square, whichever controls.
2.	Operating floors and platforms	100 psf or a moving concentrated load of 1,000 lbs., whichever controls.
3.	Paved areas (concrete or asphalt) outside the building	500 psf or HS-20 truck loading, whichever controls.
4.	Loading dock slab	500 psf or HS-20 truck loading, whichever controls.
5.	Mezzanine floors	100 psf, or a moving concentrated load of 2,000 lbs. to an area 2-1/2 feet square.
6.	Walkways, stairways and landings	100 psf or a moving concentrated load of 500 lbs., whichever controls.
7.	Catwalks	50 psf or a moving concentrated load of 500 lbs., whichever controls.
8.	Access floor systems	20 psf
9.	Hardcap ceilings	20 psf

10.	Storage areas	Determine from use but never less than 150 psf.
11.	Electrical or mechanical equipment rooms	150 psf or actual equipment loads, whichever controls.

NOTE: For access floor systems, in addition to meeting the loading requirements of the UBC, each floor panel shall be capable of supporting a uniform live load of 250 psf with a maximum deflection of 0.04 inch at the center of the panel and a 1,000 pound concentrated load applied through a one square inch area at any point on the panel with a maximum beam deflection of 0.08 inch. Maximum permanent set as measured on the underside surface of the panel shall not exceed 0.01 inch under concentrated load and uniform load. Ultimate load shall be at least two times the concentrated design load, i.e., with a safety factor of two.
For lateral resistance, the floor system shall withstand a minimum of 25 psf horizontal force at floor level which includes the lateral load from floor live load plus access floor dead load plus partition load. Minimum lateral design shall meet UBC. To resist this lateral force, base plates shall be mechanically fastened to the building floor by expansion anchor bolts. Pedestals shall be connected to base plates with a continuous fillet weld.

B. Roofs shall be designed with sufficient slope or camber to avoid ponding of water (minimum of 1/4 inch in 12 inches).

C. Lifting equipment such as bridge cranes, jib cranes, monorails, davits, booms and their supporting members shall be designed for a safe working load plus impact load as per ANSI Standard B30.15, 1988.

D. Ladder framing and rungs shall be designed to support a minimum concentrated live load of 500 pounds or 40 pounds per foot height of ladder whichever controls.

E. Railings, including their connections and supports, shall be designed to withstand a minimum concentrated live load of 200 pounds applied in any direction at any point on the top rail.

3.2.3 Operating Load

The operating load for process equipment, apparatus and piping is the maximum weight of the contents during operating conditions. Unless otherwise specified, piping design load on pipe supports shall be 35 psf (which includes the weight of the pipes, insulation and contents) of the tributary area of the support.

3.2.4 Thermal Load

Thermal forces caused by expansion or contraction due to a change in temperature from the erection condition or change in temperature of contents during start-up and operation shall be considered.

3.2.5 Wind Load

All structures, buildings and equipment and their parts, attachments and supports shall be designed to withstand the wind pressure, p, acting on the projected area of the building, structure, or equipment and all attachments which contribute to that projected area. The wind pressure, p, shall be determined from the formula in the UBC.

3.2.6 Earthquake Load

A. All structures shall be designed to conform with the UBC. For Navy facilities, all structures shall be designed to conform with the UBC or the appropriate Army, Navy and Air Force Design Manuals, whichever controls.

B. Mechanical equipment and piping supports including anchorage and equipment tie-down aboveground level shall be designed to withstand minimum horizontal earthquake force equal to 60% of the weight of the equipment and contents applied at the center of gravity. Isolators including attachments shall be designed to transmit seismic or wind loads to the support framing in accordance with the UBC. Coordinate all work with the Mechanical Engineering group of LMMS Facility Engineering organization.

3.2.7 Surge Load

Surge loads may occur in some vessels or equipment. In such cases, the magnitudes and directions of the loads will be given in the equipment specifications.

3.2.8 Dynamic Load

A. All structures shall be designed to withstand the effects of vibration and impact to which they may be subjected. Structures and foundations supporting compressors, turbines, pumps or other machinery having significant dynamic loads shall be designed for the unbalanced forces specified by the manufacturer. Vibration amplitudes shall be kept within acceptable limits. Other sources of dynamic loading shall be considered as follows.

B. In the absence of pertinent data such as soil and machine parameters, the foundation may be designed to satisfy a foundation weight to machine weight ratio of between 3.0 and 5.0, with approval from the Structural Engineering group of LMMS Facility Engineering organization, depending on the type of machine and severity of vibration.

C. Structural elements carrying live loads that induce impact shall be designed for not less than the following percentage increases in the moving load.

Structural Elements	Percentage Increase
1. Supports of elevators	100%
2. Crane support girders and connections	25% minimum (unless a smaller value can be justified)
3. Jib cranes, monorails, davits	25% minimum (35% for Navy Facilities)
4. Supports of light machinery, shaft or motor driven	20%
5. Supports of light reciprocating machinery	50%
6. Hangers supporting floors and balconies	33%

D. Crane runways and their support shall also be designed to withstand transverse and longitudinal impact loads.

E. Splices in crane rails shall be staggered. Provide 1/32" clearance and ream splice bar holes to ensure snug fitting bolts. Do not weld crane rails to girder. Use clamp plates with reversible fillers rather than hook bolts which may work loose. Do not connect crane stops to rails.

3.2.9 Earth Lateral Pressure

Unless otherwise indicated in the geotechnical report, the minimum active earth pressure against retaining walls shall be based on an equivalent fluid pressure of 40 pcf. A uniform horizontal minimum pressure of 100 psf shall be added to the earth pressure for retaining walls adjacent to roadways. California Department of Transportation Bridge and Structural Design Division design charts may be used to determine the uniform horizontal pressure.

3.2.10 Combined Loads

A. Structural design shall be based on all individual loads and combinations of load that may act together.

B. Crane or monorail hook loads need not be combined with either roof live loads or earthquake loads. Refer to the UBC.

3.3 OVERTURNING MOMENT

A. The overturning moment of the horizontal loads about the base of the foundation shall not be greater than two-thirds of the moment of stability of vertical loads about the toe of the foundation, except when piles or drilled foundations capable of resisting uplift loads are used.

B. When uplift piles or drilled foundations are used, the safe allowable working capacity shall not be exceeded in either tension or compression.

3.4 HIGHER ALLOWABLE STRESSES

For load combinations involving wind or earthquake loads, allowable stresses may be increased by 33-1/3% except for the following:

A. Soil pressures or pile capacities shall not be increased unless permitted by the Geotechnical Report.

B. Anchor bolt capacities (in tension and in shear) shall not be increased.

C. Stress increases shall not be taken when not allowed by the UBC.

3.5 ALLOWABLE DEFLECTION FOR CRANE, GIRDERS, RUNWAYS AND MONORAILS

Crane runways, bridge girders and monorails shall be designed to limit the maximum actual vertical deflection to the following when loaded to 100% of the rate capacity. Impact need not be included in deflection calculations.

Underhung bridge crane girders, runways and monorails	Span/600
Top-running bridge crane runways	Span/600
Top-running bridge crane girders	Span/900
Jib cranes	Span/450
Bridge crane runways and girders for Navy Facilities	Span/1000

3.6 CONSTRUCTION RELATED GROUND WATER

Care shall be exercised when planning deep excavations, borings and pile driving operations, because of possible cross-contamination of ground water and the need to properly dispose of both the water and the excavated material. Refer to the detailed procedures for disposal of construction related ground water in Section 13, Environmental Design Standards.

3.7 SEISMIC REINFORCEMENT FOR FURNITURE

A. All first aid and emergency supply cabinets shall be seismically anchored.

B. Mail bins, vending machines and cabinets are not allowed in exit corridors.

Note: Storage of combustibles is prohibited in fire rated corridors.

C. Typewriters, computers, and other similar equipment located on or above the third floor shall be restrained. Refer to LMMS Engineering Construction Details in FES Construction Specifications, Volume II, Architectural and Structural.

D. Objects weighing greater than 24 oz. and 4 feet in height located on top of furniture or fixtures shall be restrained.

E. Five-drawer files, five-drawer lateral files, and mag tape files shall have passive locking devices.

F. Cabinets or other furniture containing hazardous materials shall be seismically anchored.

G. All cabinets or bookcases greater than 5 feet in height shall be seismically anchored.

H. All storage racks shall be seismically anchored. In addition, all racks over 8 feet in height shall be designed for additional loads/requirements as specified in the UBC.

I. Seismically anchor all furniture in accordance with furniture manufacturer recommendation(s). Design Standards shall govern when they are deemed more stringent.

J. All cabinets, bookcases and files shall be properly loaded from the bottom up.

K. Furniture Anchoring

1. Furniture located on or below the second floor along major aisles or corridors with a total height to least base ratio exceeding 3 to 1 shall be seismically anchored if the toppling of the furniture would effectively block egress of personnel or ingress of emergency personnel or equipment.

2. Furniture located on or above the third floor along major aisles or corridors with a total height to least base ratio exceeding 2 to 1 shall be seismically anchored if the toppling of the furniture would effectively block egress of personnel or ingress of emergency personnel or equipment.

   Common furniture height to least base ratio includes:

4-shelf bookcase	4.6 to 1
5-drawer file	3.8 to 1
4-drawer lateral file	3.2 to 1
Medium boy cabinet	3.3 to 1
2-shelf bookcase	2.5 to 1

3. The height to base ratio may be decreased by bolting the furniture together. Bolt penetrations shall be per seismic bolting pattern detail. Refer to Industrial Engineering group of LMMS Facility Project Development organization for detail.

L. Consult with the appropriate LMMS safety organization regarding any situation that may present a potential life or hardware threatening situation during an earthquake. Particularly be on the lookout for situations where unstable furniture or equipment could trigger a “domino failure”, or any furniture that is greater than 5 feet in height and located on or above the third floor of LMMS buildings.

3.8 CALCULATIONS

A. All structural calculations shall have an organized logical format with a master index for easy referral. Use CSI format where possible.

B. Sufficient key plans and sketches with cross-reference designations shall be included to permit identifications of all elements. LMMS building and job reference numbers shall be shown on all calculation sheets.

C. Computer printouts shall be accompanied by adequate sketches and notations showing configuration and loadings to provide a reviewer an understanding of the computations. The names of the computer programs used shall be noted.

D. All computer data used for hand calculations (or references) shall be cross-referenced to the sheet number on computer printouts. All calculations and computer printouts shall be signed and stamped by a California Licensed Civil or Structural Engineer.

END OF SECTION

SECTION 4
MECHANICAL DESIGN STANDARDS

4.1 GENERAL

4.1.1 Correlation and Coordination

A. This section provides standards for the Mechanical design work. These design standards shall correlate with the current edition of Lockheed Martin Space Systems Company (LMS) Facility Engineering Standards (FES), Construction Specifications, Volumes I through IV, and other sections of this Facility Design Standards. Where applicable, the Engineering Construction Details delineated in the FES Construction Specifications, shall be used for compatibility to LMS existing facilities design.

B. The Mechanical design work shall be designated under the current Construction Specifications Institute (CSI) format.

C. The design shall be fully coordinated with other related architectural and engineering disciplines to eliminate conflicts and omissions, and to ensure that the total project requirements are met. Prudent judgment must be exercised in collaborating design solutions with LMS Maintenance and using organizations.

D. All design/construction drawings shall follow LMS drawing procedures and standards, unless specifically described otherwise in specific Sections of this Facility Design Standards. Refer to Section 11, Drawing Procedures for all drawing requirements.

4.1.2 Design Philosophy

The design shall be done in a manner to assure that the maximum benefit is obtained for the costs expended. Safety, quality and reliability shall not be compromised as a cost saving measure. The methods of analysis and design shall follow the established principles of professional engineering practices. Value Engineering is encouraged during the development of the design work.

4.1.3 Codes and Standards

Design work shall comply with the current adopted edition of all applicable city, county, state and federal codes and standards. In addition, the current adopted edition of the following codes, standards and publications, are considered as the governing references to this section. Applicable recommendations of related trade and professional associations not listed here shall also be considered.

California Code of Regulations Title 24
Local Municipal Code
Occupational Safety and Health Administration (OSHA)
California Industrial Safety Orders Title 8 (Cal/OSHA)
Bay Area Air Quality Management District (BAAQMD)
Uniform Mechanical Code (UMC)
Uniform Plumbing Code (UPC)
Uniform Building Code (UBC)
Title 20 Storage of Hazardous Materials
National Fire Protection Association (NFPA)
Uniform Fire Code (UFC)
American Gas Association (AGA)

Underwriters Laboratories (UL)
Federal Standard 209D
American Society of Heating, Refrigeration and Air Conditioning Engineers (ASHRAE)
Sheet Metal and Air Conditioning Contractors National Association (SMACNA)
Factory Mutual Engineering Corporation (FM)

4.1.4 Related Codes and Standards Requirements

A. LMS Building Automation Systems (BAS) and Heating, Ventilating and Air Conditioning (HVAC) controls standards. Refer to Section 16, Building Controls Design Standards.

B. Industrial Ventilation Manual, American Conference of Governmental Industrial Hygienists

C. Applicable mechanical equipment shall be AGA, UL and FM approved and/or labeled.

D. Should conflict arise between codes, regulations or standards, the most stringent one applies.

E. Conflicts between LMS requirements and any code, standards or publication shall be brought to the attention of LMS in writing for resolution and/or direction. No design work shall proceed without resolving each item or issue with the Mechanical Engineering group of LMS Facility Engineering organization.

4.1.5 Design Review Process (Requirements & Deliverables at Each Design Phase)

A. 0% Pre-Design Concept

1. Assumptions and Constraints
2. Schedule of Deliverables
3. Schedule of Pre-purchased Equipment
4. Design Concept - HVAC Team will provide design methodology to pursue.
5. Requirements - Temperature, Humidity, Pressure, etc.

B. 30% Design Review Requirements

1. Include all comments & requirements from all previous reviews.
2. Load & Mechanical Calculations (Pumps, Fans, Coils, etc.)
3. Meet with HVAC Team
4. Bill of Materials (complete with manufacturers)
5. Basic Preliminary Drawings
6. Identify Any Potential Energy Savings
7. Energy Savings Calculations
8. Completed Site Investigation by Design Engineer

9. Cut Sheets of Proposed Equipment

10. Preliminary Schedule

11. LEED Checklist, if applicable

12. Identify all long lead items.

13. Identify any preliminary meetings with city.

14. Identify code, government, and municipal requirements.

15. Identify supplemental specs.

16. Identify preliminary pertinent existing utilities.

C. 60% Design Review Requirements

1. Include all comments & requirements from all previous reviews.

2. Updated drawings showing incorporated elements from the HVAC Team review.

3. Updated Bill of Materials & Cut Sheets, if applicable.

4. List of elements the HVAC Team requested that were changed or not incorporated (to be approved).

5. Updated Project Schedule

6. Preliminary Point of Connection matrix shall be completed and submitted to Lockheed Martin. Information shall highlight all outages required and known areas impacted.

7. Supplemental Specification Requirements

8. Specifications shall be substantially complete.

9. Three acceptable manufacturers for each item of equipment including specific manufacture's catalog numbers or equipment type.

10. Sections covering all mechanical equipment and devices.

11. Specific installation information for all mechanical equipment and devices.

12. A detailed testing and inspection section.

13. Mechanical long lead items shall be ordered.

14. Define any training requirements.

15. Design scope of work shall be locked in.

D. 90% Design Review Requirements

1. Include all comments & requirements from all previous reviews.

2. Any changes to the project requirements at this stage must be made by Lockheed Martin project team.

3. The effort between the 60% and the 90% submittal should be primarily drafting and issue resolution.

4. Final proposed Point of Connection matrix shall be completed and submitted to Lockheed Martin. Information shall highlight all service and utility outages required and known areas impacted.

5. Contractor shall submit a comprehensive risk plan and formal cost proposal

6. Submit all HVAC Controls drawings (SoO, flow diagram, ladder logic, wiring diagram, etc.)

7. Updated drawings showing incorporated elements from the HVAC Team review

8. Updated Bill of Materials & Cut Sheets, if applicable

9. List of elements the HVAC Team requested that were changed or not incorporated (to be approved)

10. Updated Schedule

11. Schedule required HVAC outages.

12. Submit a list of all equipment (section 4.2.5.C) that will be relocated or disposed of. The “equipment removal list” form shall be obtained from LMSLMS Project Manager. A separate list shall be provided for program owned equipment which will be relocated or disposed of.

E. 100% Complete/ Issued for Construction

1. Submit a complete full size set of project design documents and specifications for final approval and sign off.

2. Submit 100% package electronically per established procedure.

3. Provide bidding and permitting documents as required.

4. At the end of the bid period update the drawings and specifications to include all Addenda. These documents shall be the contract set. Submit 8 half size sets to Lockheed Martin Team.

F. After Issued for Construction

1. Any design changes, substitutions, and modifications must be submitted to the HVAC team for approval

4.2 DESIGN CONSIDERATIONS

4.2.1 General

A. This Mechanical Design Standard is for system design of Heating, Ventilating and Air Conditioning (HVAC), Plumbing and Process Piping and Fire Protection.

B. Final design work shall commence only when the preliminary design concept is approved by LMS Mechanical Engineering group.

C. The Heating, Ventilating and Air Conditioning Request, Form 24G-1000M Revision 2/84, shall be completed, signed and approved by Mechanical Engineering group of LMS Facility Engineering organization, prior to the start of design.

D. All mechanical equipment shall be concealed from ground level line of sight. Concealment shall be approved by LMS and the City having jurisdiction.

E. Corridor walls throughout shall be “clean” with no mechanical equipment protruding.

F. Any mechanical equipment discharging to the atmosphere shall be in complete compliance with the requirements of BAAQMD and any other regulating agencies having local jurisdiction.

G. Provide all security requirements as required by the Technical Security group of LMS Physical Security organization. Refer to Section 6, Security Design Standards and Section 17, Security Systems Design Standards.

H. Ventilate all telephone, elevator and Access Control and Alarm System (ACAS) rooms. Ventilate, when required, all electrical transformer and switch gear rooms.

I. Toilet areas shall be power exhausted at a rate not less than 2 cfm per square foot of floor area (based on an 8 foot ceiling). Negative room pressurization of 0.05 inches to 0.1 inches water column (WC) is required.

J. Provide power exhaust at break areas and other areas where cooking appliance such as microwave ovens will be used.

K. Provide seismic bracing, vibration isolators and supports for all equipment piping, and duct work conforming to SMACNA guidelines, code and Section 3, Structural Design Standards.

L. Areas of existing buildings to be remodeled shall be brought up to code. Refer to Paragraph 4.1.4.

M. Field verify the present conditions of all existing equipment, duct work, piping and related accessories intended to be reused. Provide restoration or refurbishment specifications to ensure proper operational performance, including air flow rate, water flow rate and insulation repair.

N. All existing mechanical systems not indicated or implied as part of the project but whose operation or performances are adversely affected by the new work shall be investigated and verified. These systems shall include but not be limited to chilled water, heating hot water, HVAC zones, plumbing, fire protection and other mechanical installations. A written report complete with recommendations and alternatives shall be submitted to LMS Mechanical Engineering group at the early stage of the design phase for evaluation and direction.

O. Mechanical rooms shall be designed to accommodate the major HVAC equipment such as air handling units, chillers, boilers, cooling tower pumps and other related appurtenances as required. It shall include air compressors, vacuum pumps, etc. Powered exhaust fans shall be considered to remove heat from the mechanical rooms.

P. Adequate work space (3 feet wide minimum by 42 inches deep where electrical work must take place) around all equipment shall be provided. Service area required by the equipment manufacturer for condenser/evaporator/boiler tubes removal and other purposes shall be satisfied.

Q. Process Flow Diagram (PFD) shall be prepared for process cooling water, chilled water, heating hot water, condenser water, compressed air, vacuum, liquid nitrogen (LN_2), nitrogen gas (GN_2), acid neutralization, industrial waste, chemical handling systems and other processes, complete with pipe size and flow rates. All discharge/blow down locations shall be identified.

R. Sectional valving in all piping systems shall be provided for flexibility during repair or remodeling.

S. Strainers shall be provided in the inlet line to all temperature regulating, pressure reducing, and automatic modulating control valves.

T. All water piping shall be routed away from critical and high value areas which are susceptible to water damage.

U. Provide expansion loops and related anchors in all hot water distribution piping based on maximum of one inch expansion. Also provide pipe alignment guides adjoining each side of each expansion loop or joint.

V. Removable equipment/machine guarding, conforming to OSHA requirements, shall be provided in all prime movers, shafting, pulleys, belt and chain drives, and other rotating parts of equipment.

W. Dependent upon the availability with respect to unit size, only HCFC-22 or CFC-500 refrigerant shall be provided for all refrigeration systems. A recovery tank shall be provided unless otherwise noted.

X. Provide chemical feed station and corrosion coupon racks on condenser water loop, and water meters on make-up and blow down lines on all cooling towers.

Y. Provide unions ahead of or behind all valves, switches, pumps, etc. to facilitate removal during repair or replacement.

Z. Provide indications on plans and provide large scale design details indicating the clear floor area required to service as well as perform repairs on equipment, and to remove and replace components. This includes but is not limited to chillers, boilers, air handling units, air conditioners, fans, cooling towers, and humidifiers

4.2.2 Design Conditions

A. The building shall be fully air conditioned, zoned and controlled for all year automatic operations.

B. Title 24 Energy Design Requirements shall have precedence over summer and winter design conditions for desk and board areas only.

C. Design temperatures and relative humidity shall be as follows unless otherwise specified:

	Winter			Summer		
	DB	WBT	RH	DB	WBT	RH
Outside	34° F	---	---	98° F	---	50%
Inside	72° F	---	0% to 100%	72° F	---	0% to 100%

D. For outside design temperatures of cities other than Sunnyvale, Palo Alto and Milpitas, consult ASHRAE climatic data.

4.2.3 Zoning

The following areas are required to have separate zoning control:

Outside wall to 15 foot depth (window wall only)
Corner rooms
Conference rooms
Computer and CADAM rooms - dedicated system
Clean rooms - dedicated system
Program Information Centers (PIC rooms)
ACAS rooms and telephone equipment rooms/Integrated Wiring Centers (IWC) Rooms (24 hours cooling required)
Open ceiling, high wall - enclosed areas
Reproduction rooms -with appropriate amount of fresh air
Cafeterias and kitchen areas
Library rooms
Classrooms/Training Rooms/Special Purpose Rooms
Central areas - not more than 4,500 square feet per zone
Chemical Process areas
Communications Equipment Room (CER) - dedicated system

4.2.4 Calculations

A. General

Calculations in general shall conform to the following outline:

1. Criteria - state the overall scope of the problem.

2. Data - include all known facts, data for design, assumptions, references, present and future user requirements, etc.

3. Design - performance of calculation.

4. Summary and Conclusions - as required.

B. The HVAC calculations shall follow ASHRAE format/method only. For environmentally controlled areas, a psychometric chart shall be included showing conditions and plotted parameters. Room by room calculation is required to justify each design cfm. The selection of AC unit must satisfy both the sensible heat ad the latent head calculations respectively.

C. All calculations shall be checked thoroughly before submission to LMS Mechanical Engineering group.

D. Submit two copies of calculations to LMS Mechanical Engineering group for review and approval prior to the start of final design work.

E. Calculations shall include but not be limited to the following, whichever applies:

1. Design conditions
2. “U” factors
3. Building/room/area heating
4. Building/room/area cooling
5. Equipment load and sizing
6. Coil selection and sizing
7. Equipment selection and sizing
8. Air distribution systems and return/relief systems
9. Exhaust systems, make-up air system, and economy air system
10. Hydronic systems
11. HVAC monitoring and control systems including energy management provisions
12. Domestic cold water loads
13. Domestic hot water loads
14. Natural gas and sizing
15. Shop air and equipment selections
16. Vacuum air and equipment selections
17. Sewer/vent and storm drainage sizing
18. Process piping and equipment sizing
19. Chemical handling equipment sizing
20. Pump sizing and selection
21. Control valve sizing
22. Piping systems and pipe supports
23. Building/room pressurization gradients
24. Title 24 Energy Requirements

4.2.5 Equipment

A. To minimize maintenance stocking requirements and costs of connection during construction, the design, where applicable, shall specify the following manufacturers to ensure the selection is compatible with existing plant equipment. Manufacturers listed in FES Construction Specifications, Volume III, Mechanical and Equipment are also acceptable.

B. Dependent upon the availability with respect to unit size, only CFC-500, 123, 410A, or 134A refrigerant shall be provided for all refrigeration systems. A recovery tank shall be provided unless otherwise noted.

C. Equipment List

Circulating Pumps
Bell & Gossett
PACO
TACO

Water Heaters
A. O. Smith

Fans
Trane
Carrier
Greenheck
Twin City
Joy

Plumbing Fixtures
American Standard
Kohler
Toto

Coils
Trane
Carrier
McIntyre

Sound Traps
Gale
IAC

Temperature Control
TAC I/A Series

Terminal Units (VAV)
TITUS
Trane
Tempmaster

Air Distribution
TITUS
Air Devices
Tempmaster
Trane
Tuttle & Bailey

Underground Chilled and Hot Water Piping
Rickwil-Galva-Flex
Nova

Cooling Tower
Baltimore Air Coil
Marley
Evapco

Computer A/C Units
Data Aire
Liebert

Boiler
Cleaver-Brooks
American Standard
Bryan
Patterson-Kelly
AERCO

Chillers
Trane
Carrier

Air Handling Unit
Trane
Carrier
York
Huntair
Haakon
Temtrol
Energy Labs

Air Compressors
Ingersol-Rand
ATLAS Copco
Joy

Filter Units
American Air Filter
Farr
Cambridge

Humidifiers
Dri-steam
Nortec
Hermidifier

Condenser Water Pumps
Bell & Gossett
PACO
TACO

Scrubbers
Harrington
Beverly Pacific

Utility Fans
Trane
Barry
Central Blower
Greenheck
Twin City

Fiberglass Duct
Fiber-DYNE
ATS

Spot Coolers
Liebert
Data Aire
MovinCool

Building Automation System
TAC I/A Series

Packaged Rooftop Unit
Trane
Carrier

Split AC unit
Trane
Mitsubishi
Daikin

4.2.6 Security Requirements

Refer to Section 6, Security Design Standards and Section 17, Security Systems Design Standards.

4.2.7 Support of Rooftop Equipment

A. This article applies to supports for equipment, piping conduits and other elements of Mechanical systems mounted on roofs and exposed to the weather. It is intended to minimize leaks, to minimize the deterioration of equipment support structures, and to improve access below equipment for re-roofing and roof maintenance

B. Exposed wood shall not be used for any purpose, including blocking, sleepers, platforms or support structures

C. Protected wood may only be used to construct duct penetration curbs. Such curbs shall be covered by roofing membrane, flashed and counter-flashed. Wood sleepers are not allowed, even if covered by roofing material.

D. Items that require attachment to the building structure shall be supported on pipe stanchions that penetrate the roof membrane. Provide a minimum of 18 inches clearance below horizontal members supported by pipe stanchions, with increased clearance for objects wider than 4 feet.

E. Mechanical equipment shall be supported on platforms or frames above roof, not on curbs. This is to prevent equipment from leaking into the space within curbs.

F. Items that do not require attachment to building structure shall be supported on manufactured synthetic roof support systems, such as Dura-Blok.

4.3 HEATING, VENTILATING AND AIR CONDITIONING

4.3.1 Mechanical Rooms/Fan Houses

A. Mechanical rooms shall house all major equipment such as air handling units, chillers, boilers, cooling towers, pumps, air compressors, and appurtenances as required.

B. Mechanical equipment rooms shall be power ventilated and thermostatically controlled.

C. Chilled water system shall be variable speed pumping.

D. Standby pumps shall be provided for condenser, chilled, and hot water systems.

E. Water treatment shall be provided for all water systems.

F. Coil valve piping shall be as approved by the LMS Mechanical Engineering group.

G. Provide adequate work area around all equipment and piping to satisfy all codes. A three foot minimum service area as required by equipment manufacturer shall be satisfied.

H. Cooling tower shall use fans controlled to load demands.

I. Provide protective, removable water system filter on pump start up on all water systems.

J. LMS Mechanical Engineering group shall approve the number, size, height and location of all mechanical equipment rooms/fan houses.

K. Mixed air plenums for air handling units shall be sized to prevent stratification across coils. Provide baffles as required to maintain +/- 5 degrees F temperature variation across coil face area.

L. Filter banks shall be designed to accommodate 24 inch x 24 inch cartridge or bag filters.

M. Oxygen monitoring systems shall be installed in all chiller equipment rooms and interlocked with the Facility Maintenance Alarm System (FMAS). Systems shall meet all the requirements of ASHRAE Title 15.

4.3.2 Air Handling Units

A. Air conditioning units shall be adequately sized and properly selected to meet project requirements. It can be built-up, fan-coil, split type or self contained depending on the needs of the room or area being considered. Achieving the required performance at the maximum economy shall be the prime factor in type selection.

B. Air conditioning units shall use chilled and/or hot water as cooling and heating medium whenever such utilities are available in the building. In their absence, refrigerant and/or natural gas may be considered as second choice as approved by LMS.

C. All air handling units shall be adequately supported, complete with seismic restraints and vibration isolators conforming with SMACNA guidelines. Also refer to Section 3, Structural Design Standards.

D. Noise and vibration generated by the air handling units shall be attenuated to acceptable levels especially when the equipment is located adjacent to conference rooms and other rooms or areas where sound levels are critical. Acceptable NC levels for various activities are listed in Figure 4.3.2.1.

E. Three deck multi-zone air handling units may be used.

F. Air handling unit filters shall have a filter efficiency not less than 55% based on ASHRAE Standard 52-68.

G. All exhaust fans where practical shall be belt driven type.

H. Interior surfaces of air handling units shall not be coated or lined with foam plastic materials or insulation, unless enclosed in sheet steel panels.

I. Variable Air Volume (VAV) systems shall be used in desk and board applications only.

J. If 100% economizer is specified, build-in return fan in the air handling unit (or separate exhaust system) shall be considered to minimize the excessive pressure in the work area as required.

4.3.3 Air Distribution

A. Adequate zoning (LMS approved) shall be provided for all areas to satisfy the design requirements.

B. Air distribution shall be effectively designed so as to avoid temperature stratification, fluctuating gusts of air, warm or cold spot, local high velocities and generation of objectionable noise. On VAV systems, VAV type diffusers are required. Linear slot diffusers shall be specified for exterior zones.

C. Use of sound trap as sound attenuator shall be avoided unless specifically approved by the LMS Mechanical Engineering group.

D. Balancing dampers shall be adequately provided and strategically located for proper balancing of air systems.

E. Opposed Blade Dampers (OBD) shall be used for diverting air, economizer, minimum outside air, modulating control of relief or exhaust air and manual air volume control at main zones and branch duct work. Parallel Blade Damper (PBD) can be used for two-position applications. Each branch damper must be located as close as possible to the take-off and as far away as possible from the diffuser to minimize the sound level transmitted to the work area.

F. Fire dampers shall be provided in all ducts penetrating fire rated construction required by the UBC and UFC. Combination fire/smoke dampers shall be provided on all ducts penetrating computer rooms and associated magnetic tape storage vaults.

G. All air balancing and fire dampers located in inaccessible areas shall be provided with access panels/doors.

H. All duct supports and seismic restraints shall be provided conforming to SMACNA guidelines.

I. All T-bar ceiling diffusers, registers and grilles shall be secured to the T-bar using a minimum of four sheet metal screws.

J. Unless otherwise specified, duct work shall be galvanized steel or a material resistant to chemicals as approved by LMS Mechanical Engineering group. Protective coatings shall be provided on all ducts handling corrosive fumes.

K. Do not install any air handling equipment within the furred ceiling areas.

L. No internal duct insulation is allowed unless specifically approved by LMS.

M. Supply and return air ducts shall be insulated. Ducts exposed in conditioned space require no insulation.

N. Low wall air returns shall be provided in high bay areas to provide temperature control at all room levels.

O. Transferring of air from one occupied space to another using transfer grilles either below or above the ceiling shall not be allowed.

P. For low pressure duct work, air extractors shall be provided in branch ducts at connection to main ducts.

Q. Duct turns or other approved turning vanes shall be provided in all cases where 90 degree square elbows are used.

R. The use of flexible duct shall be limited to 5 feet in length at each point of application.

S. The minimum size of duct for all applications is 6 inch.

T. Rigid insulation lining inside the duct is not allowed, except for special sound attenuation only.

4.3.4 Chilled and Hot Water System (CHW)

A. Chilled water system design shall incorporate variable pumping principles. CHW supply to individual air conditioning units shall use two-way modulating control valve with conforming piping configuration.

B. Chilled water temperatures shall be selected for the most critical environment condition.

C. Boiler water operating temperature shall not exceed 200 degrees F.

D. Water mains may be roof mounted, with stiles to be provided over pipe ways.

E. Provide sectional valves in water systems to eliminate shutting down the entire building for repairs or alterations on inline components.

F. Water systems and equipment shall be designed for complete gravity drain capability.

G. Provide protective, removable water system filters on pump start up of water systems.

H. HProvide chemical feed station, corrosion coupon rack, and make-up water meter on all systems.

I. Provide automatic air vents at all high points in the piping system.

J. All chilled and hot water lines including valves and fittings shall be insulated.

K. All piping lines shall be suitably supported, braced and/or anchored with due consideration of pipe movement due to expansion and contraction.

L. Provide condenser brush clean systems on chillers.

M. All hot water boilers shall be provided with Fireye microprocessor controllers.

N. New centrifugal chillers shall be provided with evacuation port consisting of a 2-1/2 inch x 3 inch black pipe nipple and 2-1/2 inch globe valve welded in the evaporator or condenser.

O. Circuit setters shall be installed to balance/adjust water flows. Pressure gauges shall be used upstream and downstream of each pump, coil and process equipment being served.

P. Provide necessary circuit setters and balance cocks for complete balance capabilities.

4.3.5 Temperature Control/Building Automation System (BAS)

Refer to Section 16, Building Controls Design Standards.

4.3.6 Make-Up Air and Exhaust Air Systems

A. Design

Exhaust systems shall conform to regulatory requirements, LMS specifications, and good practice. Example operations and ventilation controls are shown in Figure 4.3.6.1.

1. Face velocities of chemical exhaust hoods: For gases and vapors, face velocities shall in general be designed and adjusted to average a minimum of 100 feet per minute (fpm) into the hood's opening (the "face"), with no one point less than 70 fpm.

2. For dusts, fibers, aerosols, and other particulates, face velocities shall in general be designed and adjusted to a minimum of 130 fpm.

3. Whenever a walk-in chemical exhaust booth (including paint spray booths), consider utilizing a down draft system to prevent downstream contamination.

B. Clean-out Doors

Exhaust ducts which convey dusts, fumes, and mists shall be provided with inspection or clean-out doors at intervals not to exceed 12 feet of horizontal run for ducts up to 12 inches in diameter. New installations shall have clean out doors in open surface tank exhaust systems and plenums.

C. Combining Exhaust Streams

Two or more operations shall not be connected to the same exhaust system where the combination of substances in the same exhaust stream may constitute a fire, explosion, or chemical reaction problems. Systems, which involve two or more hoods connected above the ceiling or otherwise beyond site, shall be labeled at each hood specifying that multiple hoods are connected to a common exhaust system with a caution about mixing materials.

D. Monitoring/Warning System

Provide a monitoring/warning system for each exhaust system handling hazardous gas to inform the operator that the exhaust system is functioning properly. This monitoring/warning system shall consist of two static pressure switches (mounted on the exhaust duct) wired to a green light and a red light. When the green light is on, it indicates that the exhaust system has adequate air flow. The red light would indicate a lack of air flow as a result of possible equipment failure of fan motor or fan belt, etc. Both lights shall go off when the exhaust system is turned off.

E. Discharge to Atmosphere

The outlet of exhaust systems, scrubbers, filters, and other treatment devices shall discharge to the outside atmosphere.

NOTE: In specialized circumstances involving special programs, where exhaust systems may not be able to be routinely exhausted to the outside, Occupational Safety and Health may, in certain instances, approve exhaust system air being recycled into the work space after having been cleaned, provided that suitable continuous air monitoring instrumentation is used in the return air duct and the instrumentation automatically switches the air discharge to the outside atmosphere in cases of unsafe air concentrations or equipment failure.

F. Make-up Air

Fresh air, free of contaminants, shall be supplied as make-up air to replace the air that is exhausted.

1. The make-up air shall enter the work area in a manner that will not reduce the effectiveness of any local exhaust system.

2. Where the air supply is filtered, a pressure gauge shall be installed to show the pressure drop at which the filters require cleaning or replacement.

3. The volumetric flow rate of make-up air shall approximate the flow rate of exhausted air. The operation of the make-up air system shall be interlocked with the exhaust system.

G. For beryllium systems, the following methods of contamination control are required by Occupational Safety and Health organization.

1. Laboratory bench hood with an average face velocity of 150 fpm.

2. Enclosure with local exhaust which provides a velocity of 300 fpm through all openings.

3. Close-capture exhaust hoses with airflow sufficient to provide necessary control velocity at the point of operation.

4. Totally enclosed room, maintained at a negative pressure to the surrounding area.

5. Air cleaning equipment capable of removing beryllium contamination from exhaust air to acceptable levels.

4.4 PLUMBING AND PROCESS PIPING

4.4.1 General

A. All suspended piping shall be suitably braced, conforming to SMACNA guidelines, against seismic and/or other dynamic forces which may tend to induce movement of the piping.

B. Domestic water systems and shop air systems shall contain sectional valves to eliminate shutting down the entire building for repairs or alterations.

C. No plumbing equipment shall protrude into the entry, aisle, or hallways with equipment being recessed or relocated.

D. Air and domestic water piping below and above the roof line is acceptable. Installation economics shall determine final location.

E. Provide adequate work area around all equipment and piping to satisfy all codes and to properly maintain equipment.

F. Satisfy all handicapped toilet functional requirements.

G. New boiler tower blow down, cooling tower blow down, sewer discharge points and other similar outlets from new equipment and the building shall be identified on drawing.

H. Minimum size for underground air and water lines shall be 2 inch diameter. Provide suitable corrosion protection coating.

I. Condensate drain from air conditioning equipment shall discharge into a receptor or fixture connected to the sanitary sewer.

J. Liquids containing dissolved or suspended beryllium shall not be disposed into the sanitary or storm sewers. Such liquids shall be accumulated in suitable containers for disposal, as approved by LMS Environmental Protection group.

4.4.2 Domestic Water

A. The domestic water main size shall meet the demand requirement for building type occupancy and criteria.

B. Provide domestic hot water by using separate gas-fired water heaters and flow controlled recirculating pumps timer for instantaneous hot water on demand. Water heaters shall have a minimum combustion efficiency of 80%.

C. Remote small domestic hot water requirements may use electric water heaters when approved by LMS Mechanical Engineering group.

D. Piped air columns intended to function as shock absorbers at water fixtures are not allowed.

E. Counter lavatories, service and slop sinks shall be serviced by tempered 105 degrees F hot water, and cold water.

F. Hot water supply and drain pipe of lavatories for handicapped people shall be insulated.

G. Water closet and urinal flush valves shall be provided with water saving inserts.

H. The water flow in gpm shall be indicated on the design drawings for all water systems.

I. Provide water shock absorbers in all water lines serving quick closing valves, and at bathroom water fixtures. Provide access panels for periodic inspection. Size in accordance with Plumbing and Drainage Institute (PDI) Standards WH 201.

J. Domestic water analysis data for process use is shown in Figure 4.4.2.1.

K. All hot water lines including valves and fittings shall be insulated.

L. Shutoff valves located inside walls, furred spaces or inaccessible areas shall be provided with access panel/door with proper identification.

M. Back flow preventers of proper size and capacity shall be provided when required by code.

N. Provide vacuum breakers and/or back flow preventers in all water supplies to fixtures and equipment requiring inlet connections where a minimum air break cannot be attained or chance of contamination may exist.

O. Use gas water heater whenever gas is available in the building.

4.4.3 Sanitary Sewer

A. Underground lines shall be set at sufficient depth to allow for future tie-in in all parts of the building. All slopes and invert elevations shall be indicated at all tie-in and discharge points on the drawings.

B. The system shall be designed to accommodate the requirements, except that no underground line (outside of toilet areas) shall be less than 3 inches.

C. All floor sinks shall be labeled “Floor Drains” on the drawings and shall be flush with the finished floor.

D. Floor drains in toilet rooms and other areas where safety or sanitation have to be maintained shall be provided with trap primers to keep their water seals.

E. Auxiliary sanitary sewer lines shall be installed as directed by LMS Mechanical Engineering group.

F. Clean outs shall be provided at the base of all soil, waste and leader stacks, and at all changes in direction of horizontal piping.

4.4.4 Natural Gas

A. The natural gas system shall be designed in accordance with AGA Standards for consumer-owned gas piping systems and NFPA Standard 54.

B. All gas piping, hot water boiler and water heater controls shall conform to the requirements of Section 16, Building Controls Design Standards.

C. Gas pressure at the main within LMS Plant 1 is 5 psi.

D. Provide an earthquake natural gas valve at the entry point to the building.

E. Gas piping shall be designed without pockets, with drips at low points, and with valves at each outlet.

F. Refer to Section 16, Building Controls Design Standards for BAS requirements.

4.4.5 Compressed Air

A. Provide compressed air piping for shop air system in order that 100 psi can be provided at the most remote air source requirement with a maximum drop of 10% of initial pressure between the source and the most extreme air termination point. Pressure reducing valves shall be used for low pressure demands in the system.

B. Provide a non-oil based 125 psi rated compressor, ASME compressed air tank, after-cooler, refrigerated air dryer, and appurtenances. Oil lubricated air compressors with

non-hydrocarbon oil may be used for shop air applications as approved by LMS Mechanical Engineering group.

C. Compressed air main line shall form into a closed loop to encircle an area or building interior, when practicable, to maintain maximum pressures at branches and outlets. The loop shall have segregating valves at two or more points to allow a partial shutdown of a system for maintenance or repairs.

D. All branches or outlets shall be taken off at the top of the main.

E. Piping shall be free of unnecessary pockets and pitched (1/4 inch per 10 feet in the direction of flow) to low points where there shall be scale pockets with blow down valve for cleaning.

F. Water cooled air compressor shall be recirculation type using heat exchangers or any other method as approved by the LMS Mechanical Engineering group. The use of City or domestic water as a cooling medium is unacceptable.

G. All compressed air tanks shall be equipped with an automatic condensate drain valve with a manually operated bypass. The drain must be located at the lowest point where water can collect and be suitably located for convenient operation. Compressed air tanks are part of a compressed dry air system shall not be exempt from this requirement.

4.4.6 Restroom Requirements

A. For LMS Leased Buildings
All Areas - Male and Female

WCs*	1 for 1-15
	2 for 16-35
	3 for 36-55
	4 for 56-80
	5 for 81-110
	6 for 111-150
	1 Add. for each 40 more

For LMS Owned Buildings
All Areas - Male and Female

WCs*	1 for 1-15
	2 for 16-30
	3 for 31-45
	4 for 46-60
	5 for 61-80
	6 for 81-100
	1 Add. for each 25 more

B. For LMS Leased Buildings
All Areas - Male and Female

LAVs	1 for 1-15
	2 for 16-35
	3 for 36-60
	4 for 61-90
	5 for 91-125
	1 Add. for each 45 more

For LMS Owned Buildings
All Areas - Male and Female

LAVs	1 for 1-15
	2 for 16-35
	3 for 36-60
	4 for 61-90
	5 for 91-125
	1 Add. for each 45 more

*Figures are total for WCs and urinals. WCs must be not less than 2/3 of total.

C. Water coolers generally shall be 1 per 75 people. However, if liquid dispensing machines are in the vicinity, this figure is subject to adjustment. Water coolers shall be dual height with lower cooler having 30 inches knee clearance and 36 inches maximum to spout from floor.

D. In a multistory building or other building with subdivided areas, the number of required fixtures can be determined from the total building occupancy rather than by occupancy in the subdivided areas.

4.5 FIRE PROTECTION

A. Refer to Section 8, Fire Protection Design Standards.

B. Manual smoke purge shall be provided for areas equipped with gaseous fire suppression systems. Refer to Fire Protection Design Standards for connection to Fire alarm Control Panel.

4.6 COMPUTER ROOM REQUIREMENTS

A. Refer to Section 8, Fire Protection Design Standards for smoke detector and audible alarm requirements.

B. Computer room temperature and relative humidity design conditions shall be as stated on the Facility Industrial Engineering group of LMS Facility Project Development organization layout drawings or as specified.

C. Air handling equipment for computer rooms shall be separate from system used for other sections of the building.

D. Provide flexible connections to all ducts and pipes hooked up to the HVAC and exhaust units to eliminate vibration.

E. Chilled water piping system mains and branch piping shall be provided and connected to the computer room A/C units. All necessary appurtenances to control, meter, and pressure check the water systems shall be provided.

F. All computer room equipment utilizing water systems shall have supplementary water pumps as needed.

G. Chilled water supply temperature indicating lights and audible alarms shall be provided to warn users or occupants whenever the water temperature goes out of specifications. The lights and alarms shall be located inside the computer room.

H. Provide floor drains in the computer room floor. Gravity or powered condensate drain lines shall be provided from computer units to the floor drains.

I. Filtered water shall be provided to the A/C units' humidifiers per LMS Engineering Construction Details in FES Construction Specifications, Volume III, Mechanical and Equipment.

J. All computer room water piping shall be drainable to the floor drain.

K. Water main piping under the raised access floor shall not obstruct computer room main cabling.

L. An alarm sensor located in the computer room shall be provided to signal when the area under the raised access floor is wet.

M. Chilled water mains shall be provided with sectional valving to prohibit shutting down the entire system for future modifications.

N. Provide combination fire and smoke dampers (with access) in all ducts penetrating walls and ceiling of the computer room.

O. Provide floor registers with integral air volume dampers or full perforated 24 inch x 24 inch floor panels, as specified.

P. Do not use the plenum below the access floor as a return air plenum, since this triggers a fire sprinkler.

4.7 CLEAN ROOMS

Refer to Section 15, Clean Rooms Design Standards.

4.8 HAZARDOUS MATERIALS

Refer to Section 13, Environmental Design Standards for additional information.

4.8.1 Piping Labeling

All hazardous material piping shall be labeled with the name of the material and direction of flow. These labels shall be placed, at a minimum, every 20 feet and also where pipelines enter and exit walls, ceilings, floors, or the ground.

4.8.2 Secondary Containments (Metal) for Equipment/Piping

A. Secondary containment is required for storage of hazardous materials that are supplied as liquids, or as granular or powdered solids. This applies, regardless of the container size.

B. Incompatible materials must be segregated in storage and may not share the same secondary containment.

C. The required volume of secondary containment is as follows, unless the materials are stored in a chemical storage cabinet:

1. For a single primary container:

   110% of the volume of the primary container.

2. For multiple primary containers:

   150% of the largest primary container, or 10% of the aggregate quantity of all primary containers, whichever figure is greater.

D. Where the secondary containment is open to rainfall, an additional volume shall be provided over that specified in Paragraph 4.8.2.C equivalent to the maximum 24 hour storm, based upon a 100 year history. In Sunnyvale, this figure is 5 inches.

E. In storage areas that are provided with sprinklers and are separate from process areas (e.g., storage rooms, buildings, fenced enclosures, under roof canopies, etc.) an additional volume shall be provided over that specified in Paragraph 4.8.2.C, if the secondary containment is open to sprinkler water. This volume is dependent upon the design and flow rate of the sprinkler system.

F. Piping leading to and from storage tanks, vessels, etc., shall also be secondarily contained, if fluid will remain in the line for longer than 8 hours. Piping carrying incompatible materials may not share the same secondary containment.

G. Whenever possible, valves and pumping systems which transport regulated materials shall be placed within the secondary containment. If this cannot be accomplished, other arrangements for secondary containment must be made, e.g., a drip pan.

H. Secondary containment shall be coated with a material that is impervious to the material being stored.

4.8.3 Emergency Eye Washes and Safety Showers

A. Emergency eye washes and safety shower units shall be provided in hazardous materials storage areas where chemicals are transferred from one container to another or handled in a manner that splashes or spills may occur, and in areas where, during routine operations or foreseeable emergencies, the eyes of an employee may be contacted by hazardous material.

B. Units shall be within 10 seconds of travel from areas with hazardous or corrosive materials. The maximum walking unobstructed travel distance is 100 feet. Units shall have an unobstructed access at all times

C. Do not locate units near electrical devices. All parts of the unit shall have a minimum 6'-0" clearance to electrical devices, and the unit shall be located so that potential users in any position will remain at least 6 feet from electrical devices. Electrical devices include non-GFCI outlets, toggle switches, safety switches, control stations, push button stations, circuit breaker panels, motor control starters, motor control centers and substations.

D. Water flow controls, without spring-loaded valves, on both the eyewash and shower shall have separate means to ensure a continuous flow will be provided by one touch and the continuous flow can be stopped by a single action of personnel.

E. Shower heads must be 82 to 96 inches high. The minimum spray pattern diameter at 60 inches shall be 20 inches wide. At a minimum, these must provide 30 gallons of water per minute for 15 minutes.

F. Eye washes must have two streams with a restrictive orifice (reduced pressure) which facilitates flushing. These streams must touch when in operation. At a minimum, these must provide 0.4 gallons of water per minute for 15 minutes.

G. Eyewash water nozzles shall be installed 33 to 45 inches from the floor. Nozzles must be protected from airborne contaminants with fitted cover caps or another means which are to be maintained in place during non-use and are automatically removed by water flow.

H. A drain is required for the eyewash to catch water run-off from tests. If drain is not present, the plumbing should be modified to ensure that a drain pipe is available that directs water into a bucket if current design does not permit it. During a test of an emergency shower, a catch bucket should be present under the shower head.

I. A highly visible and legible sign must be posted to alert personnel to the location of the eyewash, emergency shower, or combination unit. The sign shall either be placed on the wall or riser where it can be seen across the room.

J. Portable eyewash units or drench hoses are not permitted for use in LMS facilities.

4.9 WATER PURIFICATION SYSTEMS

4.9.1 WATER QUALITY STANDARD

A. Lockheed Martin Space Systems Company, Electronic Manufacturing Engineering Organization EF-42 Manufacturing Process Engineering Group
   1. PAS 8630 Q100, Product Assurance Standard for Certification and Process Control of Water from Water Purification Systems

4.9.2 QUALITY ASSURANCE

A. Determine which classification grade Type I, II or III water as defined in the water quality standard is required.

B. System shall be designed and constructed using commercially accepted services and practices for purified water

4.9.3 FILTRATION

A. Type I systems must use a 5 micron pre filter. Pre treatment may consist of all or some combination of the following components: water softener, activated carbon absorption, or Reverse Osmosis (RO) unit. Treatment shall consist of anion, cation, or mixed bed deionization columns, together with ultraviolet irradiation (UV) and 0.2-micron final filtration. Final treatment of Type I water may be required at the point of use (POU) by means of a polishing system. A resistivity meter and probe with a range of 0 to 20 mega ohms shall be installed in the circulation loop.

B. Type II systems shall have a 5-micron pre filter, and 0.2-micron final filter. A 0-20 mega ohm resistivity meter and probe shall be installed in the circulation loop. Type II treatment shall be constructed from some combination of the same components used in Type I systems as required to meet necessary water quality standard.

C. Type III systems shall have 5-micron pre filter and no less that 5-micron final filtration. Type III treatment shall be constructed from some combination of the same components used in Type II systems as required meeting necessary water quality standard. A 500 K ohm/cm quality indicator light shall be placed in line to monitor water discharge.

D. Reverse Osmosis (RO) systems shall be designed to maintain a minimum of 90% rejection of Total Dissolved Solids (TDS) from feed water.

4.9.4 LAYOUT

A. No water purification system shall be configured with a system bypass that allows untreated domestic feed water around the purification system. This shall include parallel flow paths, controls and open loops in alarm circuits.

B. On re-circulation or loop systems, dead legs shall be minimized.

C. Include a properly sized backflow preventer valve and a system isolation valve

D. Locate a pressure-reducing valve before the purification system if recommended by purification water supplier or if incoming water pressure exceeds 80 psi.

E. Locate resistivity meter and probe in the circulation loop

F. Locate a manually operated sample port after resistivity probe and before solenoid control valves for system flushing.

G. Locate totalizing water meter in the piping before treatment components.

H. For water softener systems, there shall be a free flowing drain tank to prevent unsafe excessive splashing prior to draining to the sanitary floor sink.

I. Locate pressure gauges with isolation valves at inlet and outlet of system

4.9.5 COMPONENTS

A. All systems components shall be manufactured from materials compatible with long-term exposure to purified water such as stainless steel, polypropylene, CPVC, or PVC). Materials should not degrade during exposure or cause contamination of the processed water

B. All flexible hoses and connectors used must be compatible with purified water use and pressure rated to no less than 150 PSI.

C. Totalizing water meter shall total system water usage in gallons.

D. Inlet system connections between piping of different metals shall have dielectric fittings.

E. Resistivity meter and probe shall have a range of 0-20 mega ohms and be able to be calibrated.

F. Pressure Gauges shall have stainless steel wetted parts and be rated for 0-100 psi.

4.9.6 CONTROLS

A. Type I and II systems shall be equipped with conductivity controls that provide both audible and visual alarm indications as well as operate normally closed solenoid valves that prevent water flow to the point of use when water quality does not meet the water quality standard.

4.9.7 INSTALLATION

B. At the Sunnyvale campus water treatment bottles greater than 36 inches in height shall be seismically braced.

C. All piping located downstream of the ion exchange columns shall be labeled as “Deionized Water (Non Potable)“ and direction of flow indicated. These labels shall be placed, at a minimum, every 20 feet and also where pipelines enter and exit walls, ceilings, floors, or the ground.

END OF SECTION

FIGURE 4.3.2.1

ACCEPTABLE NC LEVELS FOR VARIOUS ACTIVITIES

	Suggested Range of Activity	Noise Criteria
1.	EXCELLENT LISTENING CONDITIONS REQUIRED	
	Concert halls, recording studios, etc.	NC-15 to NC-20
2.	VERY GOOD LISTENING CONDITIONS REQUIRED	
	Auditoriums, theaters	NC-20 to NC-25
	Large meeting and conference rooms	NC-25 to NC-30
3.	GOOD LISTENING CONDITIONS REQUIRED	
	Private offices, classrooms, small conference rooms, libraries, television listening	NC-30 to NC-35
4.	FAIR LISTENING CONDITIONS REQUIRED	
	Large offices, restaurants, retail shops and stores, etc.	NC-35 to NC-40
5.	MODERATELY FAIR LISTENING CONDITIONS REQUIRED	
	Lobbies, cafeterias, drafting rooms, business machine areas	NC-35 to NC-40
6.	ACCEPTABLE WORKING CONDITIONS WITH MINIMUM SPEECH	
	Industrial areas, garages, laundries	NC-45 to NC-55
	Clean rooms	NC-50 to NC-65

FIGURE 4.3.6.1

EXAMPLE OPERATIONS AND VENTILATION CONTROLS

Operation	Typical Ventilation Controls
Spray painting/spray coating	Chemical exhaust hoods or walk-in booths with provisions to capture over spray and large aerosol particles
Welding (especially production welding)	Slot hoods, slotted plenums, or portable exhaust systems with electrostatic precipitators
Resin/adhesive mixing (2 part systems)	Chemical exhaust hoods
Grinding toxic metals	Partial or total enclosure with exhaust systems having high velocity/low volumetric flow rates
Oven curing	Simple exhaust systems
Machine woodworking	Partial or total enclosure with exhaust systems having high velocity/low volumetric flow rates
Plating and metal finishing operations	Slot hoods

FIGURE 4.4.2.1

SUPPLY WATER ANALYSIS - INLET FEED (PPM)

CATIONS	As ION	As $CaCO_3$
CALCIUM	25.6	64.0
MAGNESIUM	9.7	39.8
SODIUM	10.1	22.0
POTASSIUM	1.7	2.2
IRON	.04	.10
COPPER	.03	TRACE
ZINC	.01	__
ALUMINUM	.03	__
MANGANESE	.02	__
TOTAL CATIONS		128.1
ANIONS		
BICARBONATE	117.1	95.0
CARBONATE	__	__
CHLORIDE	10.0	18.0
SULFATE	14.0	14.6
NITRATE	.65	.5
PHOSPHATE	.03	TRACE
FLUORIDE	.09	__
TOTAL ANIONS		128.1
SILICA	3.8	
FREE CO2	2.0	
TURBIDITY (NTU)	.75	
TEMPERATURE	15 DEGREES C OR 59 DEGREES F	
RESIDUAL CHLORIDE	.75	
pH	7.9 - 9.0	
TOTAL HARDNESS	105 AS $CaCo_3$	
TDS	125 AS $CaCO_3$	
ALKALINITY	95 AS $CaCO_3$	
TOC	3.0	

FOULING INDEX (SILT DENSITY) = 4

SECTION 5

ELECTRICAL DESIGN STANDARDS

5.1 GENERAL

5.1.1 Correlation and Coordination

A. This section provides standards for the Electrical design work. These design standards shall correlate with the current edition of Lockheed Martin Space Systems Company (LMSSC) Facility Engineering Standards (FES), Construction Specifications, Volumes I through IV, and other sections of this Facility Design Standards. [to be edited per final coordination]. Where applicable, the Engineering Construction Details delineated in the FES Construction Specifications shall be used for compatibility to LMSSC existing facilities design.

B. The Electrical design work shall be designated under the current Construction Specifications Institute (CSI) Master Format.

C. The design shall be fully coordinated with other related architectural and engineering disciplines to eliminate conflicts and omissions, and to ensure that the total project requirements are met. Prudent judgment must be exercised in collaborating design solutions with LMSSC organizations and personnel.

D. All design/construction drawings shall follow LMSSC drawing procedures and standards, unless specifically described otherwise in specific Sections of this Facility Design Standards. Refer to Section 11, Drawing Procedures for all drawing requirements.

E. Plant 1 includes building numbers 0 through 199.
Plant 2 includes building numbers above 199.
Plant 5 is considered to be all buildings not in Plants 1 and 2.

5.1.2 Design Philosophy

The design shall be done in a manner to assure that the maximum benefit is obtained for the costs expended. Safety, quality, reliability, and maintainability shall not be compromised as a cost saving measure.

Incorporation of energy-saving and pollution-reducing measures, including pursuit of LEED Silver certification, is encouraged and may be required; consult with LMSSC project manager. Refer to specification section 01 81 13 for specific LEED requirements.

The methods of analysis and design shall follow the established principles of professional engineering practice. Value Engineering is encouraged during the development of the design of all systems. Life cycle cost calculations shall be part of value engineering proposals. Energy efficiency shall be considered in the interior and exterior lighting design.

5.1.3 Codes and Standards

A. Design work shall comply with the current adopted edition of all applicable city, county, state and federal codes and standards. In addition, the current adopted edition of the following codes, standards and publications, are considered as the governing references to this section. Applicable recommendations of related trade and professional associations not listed here shall also be considered.

1. Leadership in Energy and Environmental Design (LEED)
2. California Building Code (CBC)
3. California Energy Code (CEC)
4. Local Municipal Codes
5. American National Standards Institute (ANSI)
6. ASHRAE/IESNA Standard 90.1-2004, Energy Standard for Buildings Except Low-Rise Residential – Lighting Section 9
7. American Society for Testing Materials (ASTM)
8. Factory Mutual Engineering Corporation (FM)
9. Interior lighting shall be International Electrotechnical Commission (IEC)
10. Institute of Electrical and Electronic Engineers (IEEE)
11. Illuminating Engineering Society of North America (IESNA)
12. International Power Cable Engineers Association (IPCEA)
13. Joint Industry Conference (JIC)
14. National Electric Code (NEC)
15. National Electrical Manufacturer Association (NEMA)
16. National Fire Protection Association (NFPA)
17. Occupational Safety and Health Administration (OSHA)
18. Underwriters Laboratories (UL)
19. International Code Conference (ICC)

B. Lighting design reference guide: The IESNA Lighting Handbook Reference and Application, Current Edition, by IESNA

5.1.4 Design Review Process (Requirements & Deliverables at Each Design Phase)

A. 0% Pre-Design Concept

1. Assumptions and Constraints

2. Schedule of Deliverables

3. Schedule of Pre-purchased equipment

B. 30% Design Review Requirements

1. Preliminary electrical load study revised to reflect any changes in building area definition or building load.

2. A preliminary system one-line diagram to indicating all relay device numbers, meter designations, CT and PT ratios and quantities, fuse rating, and quantities, fuse ratings, and circuit breaker ratings.

3. LEED Checklist, if applicable

4. Identify all long lead items

5. Identify supplemental specs

6. Power and Lighting Distribution Preliminary Drawings.

7. Preliminary secondary Power and Lighting One-Line Diagram expanded to the branch circuit panel board level.

8. Preliminary short circuit study when required per scope of work

9. Preliminary motor control center equipment schedules indicating over current device sizes and trip ratings, starter type and NEMA size, local disconnect rating, motor identification in accordance with mechanical drawings, and motor horse power for known motor loads.

10. Preliminary Separate “Power” plan drawings indicating building service equipment and electrical distribution equipment locations.

11. Provide the following, preliminary site plan(s), as required to indicate, to clarify the project intent and possible interference.

12. Preliminary pertinent existing utilities.

13. Preliminary scope of work required electrical and telephone services

14. Underground ductbank routing and manhole locations. Ductbank sections should be included to indicate duct quantity and arrangement.

15. Site lighting indicating fixture locations and circuiting.

16. Lighting and Lighting Controls

17. Separate “Lighting” plan drawings indicating lighting fixture layout, and fixture type for all building spaces.

18. Lighting fixture schedule indicating fixture designation, description and specific manufacturer’s catalog numbers.

19. Preliminary Security and Life Safety System Drawings

20. Preliminary riser diagrams indicating system configuration and connections to existing site systems shall be provided for each of the following:

21. Preliminary controlled access system.

22. Preliminary public address system.

23. Preliminary fire alarm system.

24. Preliminary separate “telecommunications” plan drawings indicating the location of system components.

25. Preliminary telephone and data systems, existing telecommunications/data connections.

26. Preliminary plan drawings (1/4 = 1’ - 0” minimum) showing locations and size of local telecommunication closets, main CPU room and main telephone room.

27. Preliminary plan drawing indicating wire way and/or cable tray layout. Telephone and data systems shall be shown on the telecommunication plan drawings.

28. Preliminary riser diagram for each information transport system.

29. Grounding

a. Preliminary plan drawing indicating building ground loop and grounding system connections.

b. Preliminary plan drawings (1/4”-1’-0” minimum)

c. Preliminary indicating switchgear and/or substation room grounding.

d. Preliminary plan view of existing EMI/RFI ground grid.

e. Lightning Protection

f. Preliminary plan drawings indicating various lightning protection system components and layout or extensions.

C. 60% Design Review Requirements

1. Include all comments and requirements from all previous reviews.

2. Preliminary Point of Connection matrix shall be completed and submitted to Lockheed Martin. Information shall highlight all outages required and known areas impacted

3. Electrical Calculations

4. Duct bank profiles to demonstrate coordination with site terrain and with other utilities.

5. Manhole and duct bank details.

6. Installation and coordination details shall be provided where coordination with other trades or with specific building features imposed restrictions on the installation of electrical equipment, or where details are required to describe field fabrication equipment.

7. Equipment front-views for service switchgear.

8. Power & Lighting Distribution

9. Secondary power and lighting one line diagram shall be essentially completed.

10. Update “Power plan drawings indicating conduit and source box system, process power distribution, and building service equipment power distribution

11. Routing shall be shown form source to destination in plan view and utility matrix for the following:

12. Feeders.

13. All branches circuits.

14. All conduits concealed in or beneath floor slabs.

15. Panel schedules for each distribution panel and branch circuit panel indicating panel board characteristics.

16. Unit Substation and Motor Control Center elevations indicating equipment layout.

17. Lighting and Lighting Controls

18. Plan drawings updated to indicate fixture circuiting for all building spaces.

19. Lighting fixture catalog cut copies for each specified lighting fixture.

20. Control diagrams indicating lighting system control devices and interconnections.

21. Security and Life Safety Systems

22. Riser diagrams updated to indicate all remote device locations for the following:

23. Controlled access systems.

24. Public address system.

25. Fire alarm system.

26. Plan drawings, indicating the location and zone or device identification code of all system components, should be substantially complete.

27. Plan drawing indicating central equipment locations. Drawings shall indicate proposed equipment orientation and demonstrate that adequate space had been allocated.

28. Telephone and Data Systems

29. Plan drawings updated to indicate all equipment planned for installation in the respective closet or room.

30. Telecommunications drawings updated

31. Wireway and /or cable tray dimensions

32. Cable quantities

33. Specification Requirements

34. Specifications shall be substantially complete.

35. Three acceptable manufacturers for each item of equipment including specific manufacture's catalog numbers or equipment type.

36. Sections covering all electrical equipment and devices.

37. Specific installation information for all electrical equipment and devices.

38. A detailed testing and inspection section.

D. 90% Design Review Requirements

1. Include all comments and requirements from all previous reviews.

2. Any changes to the project requirements at this stage must be made by Lockheed Martin.

3. The effort between the 60% and the 90% submittal should be primarily drafting and issue resolution.

4. Final proposed Point of Connection matrix shall be completed and submitted to Lockheed Martin. Information shall highlight all outages required and known areas impacted.

5. Lock-out tag-out procedure

6. Contractor shall be prepared for order long lead items

7. Contractor shall submit a comprehensive risk plan and formal cost proposal.

8. Submit a list of all equipment that will be relocated or disposed of. The "equipment removal list" form shall be obtained from LMSSC Project Manager.

E. 100% Complete/ Issued for Construction

1. Submit a complete full size set of project design documents and specifications for final approval and sign off.

2. Submit 100% package electronically per established procedure.

3. Provide bidding and permitting documents as required.

4. At the end of the bid period update the drawings and specifications to include all Addenda. These documents shall be the contract set. Submit 8 half size sets to Lockheed Martin Team.

F. 30% Design Review Check List: all below items should be complete:

1. Preliminary One Line Diagram

2. Preliminary Power and Lighting Distribution

3. Preliminary Life Safety Systems

4. Preliminary Riser Diagram

5. Preliminary Grounding

6. Preliminary Lightning Protection

7. Preliminary Special Systems

8. Specifications

G. 60 % Design Review Check List: all below items should be complete

1. Electrical Load Study

2. One Line Diagram

3. Power and Lighting Distribution

4. Short Circuit Study

5. MCC equipment schedules

6. Lighting and Lighting controls

7. Power Plan showing location of all devices

8. Pertinent existing utilities

9. Security and Life Safety

10. Grounding

11. Lighting Protection

H. 90 % Design Review Check List: all below items should be complete

1. All comments and issues from 60% review are complete and captured on drawings.

2. Project drawings are complete except for Lockheed Martin's final review

3. Final proposed Point of Connection matrix shall be submitted

I. 100% Design Review/IFC Design Review Check List: all below items should be complete

1. All comments are complete from 90% review

5.1.4 LEED Compliance

A. LMSSC has adopted a green building policy for new construction and major renovations and uses the LEED (Leadership in Energy and Environmental Design) green building rating system current version as the standard. Electrical systems shall be designed to meet the following LEED credits:

1. Sustainable Sites Credit 8: Light Pollution Reduction.

2. Energy and Atmosphere Prerequisite 1: Fundamental Commissioning and Credit 3: Enhanced Commissioning.

3. Energy and Atmosphere Credit 1: Optimize Energy Performance.

5.2 POWER

5.2.1 Incoming Power

A. Incoming power and communication locations and requirements shall be established with the applicable utilities companies serving the site.

B. At Plant 1, incoming power is generally delivered at a nominal 12.47 kV. Other voltages may be accepted based on local conditions at LMSSC Plants 2 and 5. Such acceptance shall be by the Electrical Engineering group of LMSSC Facility Engineering organization. The power company may locate a substation at the point of service.

C. The main service point to each building is to be considered the point of service to that building.

5.2.2 Power Distribution

A. At Plant 1, the power is distributed at a nominal 12.47 kV from the point of service to the various use points in the site. A lineup of vacuum circuit breakers is used to supply the feeders. The ultimate size of this switchgear section depends upon the master plan for the site. Space should be provided for planned switchgear additions as well as a provision for 25% future growth.

B. Distribution is via an underground duct system with branches into each building. A minimum of two feeders are provided to each building. Either feeder should be capable of supplying the buildings power requirements. Additional feeders may be required in a building with high power demand. Typically, if three feeders were required, two should be capable of supplying the load.

C. A feeder may be extended into more than one building allowing it to be the normal source for one building and the standby source for a second building.

D. Normal power distribution within a building is at 480/277 volt, 3 phase, 4 wire obtained from 12.47 kV primary, dry type, cast resin, double ended unit substations located in the building.

5.2.3 Building Power Distribution

A. Building power distribution at 120/208 volt, 3-phase, 4 wire is obtained from strategically located, 480 volt primary, dry type, transformers, typically 45 or 75 kVA size.

B. Branch circuits may be fed from bus ducts or panels as is appropriate. Each separately switched pole of a branch circuit is to have a separate neutral wire.

C. For 600V building power and lighting conductors, use THHN in dry locations and THWN in wet locations.

D. A ground grid shall be provided for the building. Maximum resistance from any part of a building to the ground grid shall be 5 ohms or less, unless directed otherwise. Single point ground system may be required in a portion of the building as directed by LMSSC Electrical Engineering group.

E. Under no circumstances is an isolated ground to be installed. All grounds shall be bonded together.

F. A green insulation ground conductor is required in all raceways. Conduit or cable tray is not to be relied upon as the ground path.

G. Raised floor pedestals for non-computer room applications shall be bonded to building steel, at two locations within the room when a bolted stringer raised floor system is utilized. Contact LM Facility Engineering Department when other types raised floor

systems are planned. Refer to article on Computer Room Power in this specification for computer room raised floor bonding

H. Control voltage shall not exceed 120 volts.

I. As a minimum, circuit breakers shall have interrupting capacity rating equal to the available fault current.

J. Fully rated circuit breakers shall be used. Series connected rated circuit breakers are not to be used.

K. Motor Control Centers (MCC) shall be used where a group of motors are located in a given area or for a system. VFD's shall not be located within the MCC

L. Heavy duty, horsepower rated, load break rated, non-fused disconnect switch located adjacent to the motor, must be used as motor disconnecting means.

M. Minimum conduit size is 3/4 in. Use of 1/2 in. conduit is allowed only for light fixtures or light switches and 120V receptacle drops and requires LMCO engineering approval with LMSSC Electrical Engineering group approval.

N. Where Variable Frequency Drives (VFD) are used for motor speed control, they shall be protected from transients of a magnitude of 6,000 volts at the 480 volt level. Transient suppression devices must be UL listed.

O. 120V 20A duplex receptacles shall be provided in aisles and corridors at 50 ft. intervals (minimum), for housekeeping purposes.

P. Switchboard construction shall be utilized for electrical distribution of 400A or greater.

5.2.4 Emergency Power

A. Emergency power shall be provided in each building by one or more engine generators. Generator voltage shall be 480/277 volt, 3-phase, 4-wire. An automatic transfer switch shall be provided.

B. Prior to the detailed design of the emergency power system, the Design Engineer shall evaluate possible locations as to where the engine-generator can be installed. Listed below are major factors entering into determination of where the engine-generator can be located to best advantage:

1. The prime mover will produce noise and fume odors from fuel and exhaust.

2. Exhaust fumes are noxious and must be discharged where they cannot create a hazardous condition. Exhaust fumes from generator shall be downwind from building fresh air intakes to eliminate fumes ingested by HVAC during generator test operation. An acceptable design alternate is to interlock HVAC control with emergency test operations.

3. The engine, generator and controls require periodic maintenance and should be located in an accessible area, taking into account how the generator set will be moved into place initially, as well as possible future removal for repair or replacement.

4. Transfer switch is best located near the generator set, but system performance is not affected by separation. A location accessible for service is satisfactory.

5. The cost of necessary conduit runs from the transfer switch to the generator set, normal supply and load are important factors in selection of switch location.

6. Air supply for cooling and combustion is required.

7. Location should be selected to result in least possible interference with existing utilities.

8. Aesthetic impact of the generator set placement must be considered.

9. Generator set should be located to minimize the transmission of vibration by the engine to the adjacent structure.

10. Main fuel tank location is important as to the lengths of piping involved and ease of fuel delivery.

C. Fuel storage area design shall comply with Facility Design Standards Section 13, Environmental Requirements

1 Above Ground Hazardous Material and Waste Storage Facilities and Equipment- section 13.4: clear space, seismic bracing, capacity labeling, tank construction, secondary containment, leak monitoring, fill alarms and monitoring.

2. Signs- section 13.3.10

D. Engine generator shall be sized to approximately 130% of designed load. Specialized loads may require a dedicated emergency power system that is independent of the regular building system. LMSSC Electrical Engineering Department will identify this need when required.

E. Automatic transfer switches (ATS) with integral isolation bypass shall be provided as required. Manual transfer switch shall be by LMSSC Electrical Engineering Department approval only. By-pass switching and make-before-break arrangement shall be considered and have the concurrence of LMSSC Electrical Engineering Department.

F. Emergency power distribution system shall be independent of regular building system.

G. Power status, ATS position contact and fuel tank monitoring shall connect into the Facilities Maintenance Alarm System (FMAS) and a local fuel level and spill alarm panel. Use Warrick Controls, Model DMS 479 A2, form 1D3R Ref # B60115, DRW #725-B.

H. Submit preliminary design and back up information for LMSSC to initiate permits with the BAAQMD.

5.2.5 Design Power Loads

A. For purposes of initial design, power loads are to be estimated as follows:

1. Lighting
Based on levels required in various areas. Lighting is normally 277 volts. Other voltages may be used where appropriate for fixture type and fixture use.

Refer to IESNA Lighting Handbook Reference and Application for appropriate design standards and lighting power densities.

2. HVAC
Based on system requirements as determined during initial mechanical design.

3. Office Areas
1.0 watt per sq. ft. office equipment target 0.90 watts per sq. ft. lighting
12 watt per sq. ft. total power

4. Manufacturing Areas
25 watts per sq. ft. power (use as an early estimate before actual equipment loads are known).

5. Other
LMSSC Electrical Engineering group will identify any special loads that will affect power requirements.

6. Total load
Add a growth factor of 30% after appropriate diversity factors have been applied.

B. All design shall provide for the efficient use of energy through proper equipment selection and system control.

5.2.6 Calculations

A. Additional calculations shall be made and submitted for:

1. Voltage drop for feeders and branch circuits
2. Lighting intensity
3. Demand load analysis
4. Title 24 - Compliance documents
5. Site lighting power density
6. Horizontal and vertical footcandles at site boundary and 15 feet beyond site boundary
7. Short circuit calculations shall be made for the power system. All system protective devices shall be properly coordinated.
   a. time current curves
   b. ground fault and relay settings.
8. Arc Flash Hazard Analysis: Supply the Hazard Risk Category for PPE requirement and available energy in calories. Warning label installed by Contractor

5.3 TELEPHONE SYSTEM

A. The telephone system is extended from the site interface point to a central telephone room via an underground duct system. Distribution to site buildings is made from the central telephone room via underground communication ducts.

B. Each building shall have at least one main telephone room into which the distribution cable is run and from which the building's telephones are served. Refer to Section 9, Telecommunications Design Standards.

5.4 SECURITY SYSTEMS

A. Security systems will be provided throughout the site and building. A central alarm panel is generally provided at the local plant protection area within the building. Telephone lines are used to convey the alarms to the central alarm panel.

B. Security systems are provided and installed separately and the building electrical design provides required conduits, wire and power sources. Refer to Section 6, Security Design Standards and Section 17, Security Systems Design Standards.

5.5 UNDERGROUND DUCT SYSTEMS

A. Provide detailed design for all manhole penetrations required as part of design package, Non-engineered installations by Construction Contractor are not acceptable. Verify the existing condition of each man hole identified for modification by the design. Retain the services of STT, Splicing and Terminating and Testing Inc. for the site investigations of electrical man holes associated with design activities.

B. Based on site master plan, duct systems for power and communications shall be laid out with sufficient quantities of duct to serve the planned facility, with the minimum of one spare duct for power and communication with pull rope, in each vacant duct bank.

C. Ducts for site communication shall be 4 in. dia. Duct for power feeders between utility vaults (manholes) shall be 6 in. diameter. 5 inch diameter is acceptable for short distances from manholes to utilization equipment.

D. Manholes for communication and power systems shall be of adequate size to permit personnel to walk around and work within. They are to be complete with cable trays and racks, pulling hardware on each wall and bottom, end bells, weather sealing, bolt down traffic rated covers, and grounding. Communications manholes shall have an inner steel lid with lift handle and contact limit switch for alarm. Cover size to be a minimum of 42 in. for all manholes. Pull box for smaller content is acceptable with hinged lift lids. Lid rating to match application if in vehicle traffic area.

5.6 UNIT POWER CENTERS

A. All unit power centers shall be double ended, primary selective, 12.47 kV nominal primary, 480/277 volt 4 wire wye connected secondary. The primary duplex interrupter switches and fuses shall be located in the center of the double-ended substation, with transformers and 480V sections to be installed in the outward directions.

The primary duplex interrupter switches shall be identified on the design plan bottom fed or top fed. Inverted switches are not permitted.
Raceway or means shall be provided for primary cable connection shall be indicated on the plan (either, integral bus or by double lugging field installed cables)
Transformers are to be dry type cast resin, equipped with fans to increase the rated capacity by a minimum of 50%. Sizing of the substation shall be based on the non-fan cooled rating.

Note: The tie bus will require supplemental structural support, not supplied by the Unit Power Center vendor. The structural support, foundation, or housekeeping pad is an additional necessary part of the installation design. Switchgear is not rated to support overhead tie busway

Each double-ended substation shall be equipped with two secondary main and one secondary tie breaker. All breakers to be insulated case, draw out type. Kirk-Key interlock system is to be provided conforming to FES Construction Specifications, Volume IV, Electrical requirements.

Substation secondary bus, main breaker, tie breaker, and metering to be sized to transformer full capacity (150% of rated). Ground fault monitoring and tripping required on all circuit breakers in unit power center and require coordination of all devices.

B. Supervisory Control and Data Acquisition (SCADA)

1. A digital voltage, current, frequency, kilowatt/KVAR/power factor, power quality meter shall be provided in each main 480V output section of the switchgear. The meter shall function as a data logger for trending and be furnished with either or both, local LCD or LED electronic registers. Meters shall be able to interconnect to each other and one meter identified for Ethernet connection, wired to the IWC room. Refer to design requirements for additional meters monitoring of other 480V loads.

2. Provide a raceway between meters in or around the double ended substation. Communication between the communication meter and the master station is to be via standard Cat 5 Ethernet cables. Identify meter interconnections on design plan (sub-station single line). Electrical power plan shall illustrate conduit and wire routing for meter.

C. Unit power centers may be located in more than one area, so as to strategically feed the loads.

5.7 PANELS

A. Panel schedules shall be prepared for all panels, conforming to FES Construction Specifications, Volume IV, Electrical requirements.

B. Panels for lighting, receptacles, emergency power, etc., are strategically located throughout a building. All panels shall be recessed so as not to protrude into any aisle. No panel will be located so as to be exposed to a fire corridor.

C. Receptacle/miscellaneous 120/208 volt load panels shall not be loaded over 60% of rating and shall contain not less than 30% spare space. Typically a 45 kVA and 480-120/208 volt dry type transformer will feed a 42 circuit panel with 225 amp bus and appropriately sized main breaker.

D. The following panel number/lettering scheme shall be used:

Designation	Panel Type
P	480 volt power panel
L	480/277 volt lighting panel
R	120/208 volt receptacle panel
EP	480 volt power panel supplied by emergency power
EL	480/277 volt emergency lighting panel
ER	120/208 volt receptacle panel supplied by emergency power
S	Special function panel

E. Preceding the letter shall be a number-letter-number combination corresponding to the floor and nearest building column-letter number.

Example:

1. The complete designation for a 480 volt power panel located on the second floor at Column C7 would be 2C7-P.

2. The complete designation for a 120/208 volt panel supplied by emergency power and located on the first floor at Column F4 would be 1F4-ER. Second floor would be 2F4-ER.

5.8 LIGHTING

5.8.1 Lighting Related LEED Credits

A. Sustainable Sites Credit 8: Light Pollution Reduction. Exterior lighting shall primarily be full-cutoff luminaries. Plants 1 and 2 are considered Lighting Zone 3. All site and building mounted luminaries shall be designed to produce a maximum initial luminance value no greater than 0.20 horizontal and vertical footcandles at the site boundary and no greater than 0.01 horizontal footcandles 15 feet beyond the site.

B. Energy and Atmosphere Prerequisite 1: Fundamental Commissioning and Credit 3: Enhanced Commissioning. Lighting systems and controls are required to be commissioned by LEED qualified commissioning agent.

C. Energy and Atmosphere Credit 1: Optimize Energy Performance. Lighting systems shall be designed to be efficient to contribute to optimizing energy performance.

5.8.2 Lighting Levels

Light levels for office, factory, storage, stock and miscellaneous areas should be in accordance with the following recommendations. Research has determined that the recommended light levels are responsive to the needs of energy conservation and will not compromise the performance of visual tasks. If a specific task at a given location requires a higher light level than the level recommended by this standard, supplementary lighting may be used. This standard reflects guidelines for maintained levels of illumination for typical tasks at LMSSC and exceeds the OSHA requirements.

	Footcandles (FC)	Dekalux (DL)
A. Office Areas		
Executive Offices and Conference Rooms	45 ± 5	48 ± 5
Working Offices - Typing and General Office Work	30 ± 5	32 ± 5
Lobbies, Hallways and Corridors	10	11
Drafting	50 ± 5	54 ± 5
Active Files	0 ± 5	32 ± 5
B. Factory Areas		

General - Riveting, Drilling, Fabrication, Subassembly Work, Machine Shop	60 ± 5	64 ± 5
Template Making and Operations Requiring Close Work	100 ± 5	107 ±5
Inspection Areas	100 ± 5	107 ±5
General Processing Areas, Heat Treating, Anodizing Walkways, Aisles and Unoccupied Areas 1/5 of surrounding Occupied Areas	30 ± 5	32 ±5
Receiving and Shipping	30 ± 5	32 ± 5
Painting and Surface Coating	60 ± 5	64 ± 5
Final Assembly	70 ± 5	75 + 5
C. Storage and Stock Rack Areas		
Inactive Items	10 ± 5	11 ± 5
Active Items	30 ± 5	32 ± 5
Tool Cribs	50 ± 5	54 ± 5
D. Miscellaneous Areas		
Area Lighting (Exterior) For Plant Protection Only	0.5	0.5
Parking Areas, Exterior Storage, In-Plant Roadways, Walkways	0.5	0.5
Building Perimeter to 10 ft. Away	3 to 5	3 to 5
Restrooms	30 ± 5	32 ± 5
Building Equipment Rooms	30 ± 5	32 ± 5

5.8.3 Lighting

A. Lighting Fixtures:

1. All interior and exterior lighting fixtures shall be LED. Select fixtures from the list of approved lighting on the PG&E website: http://caioulightingqpl.com/.

2. Light fixtures shall be clearly described in a fixture schedule, including the method of hanging, and lamp type & color. Dimensioned sketches of each type of fixtures shall be provided

B. Use perimeter lighting in toilet rooms on plumbing fixture walls. Sconces, downlights, and other feature lighting shall not be used as primary illumination in toilet rooms.

5.8.5 Exit Illumination

A. Night lighting and emergency lighting shall be one and the same and shall not be less than 4% or more than 5% of all building lighting. Battery back-up at the fixture is not required for fixtures in buildings with generator back-up power. Night light fixture circuits shall be switched from emergency panels only. Individual offices shall not be equipped with night lighting.

B. Night lighting shall be provided at all exits, major cross aisles, in toilet rooms, offices greater than 750 sq. ft., lobbies, 100% mechanical and 100% electrical equipment rooms (with all but one fixture switched), and areas where large quantities of hazardous materials are used or stored, and labeled “emergency” with a 1 in. x 3 in. self-stick yellow vinyl label with red letters, viewable from the floor. Submit alternatives to this label before substituting.

5.8.6 Light Switching

A. Bi-Level and perimeter zone switching shall comply with Title 24 current edition requirements in all cases.

B. See construction specification: 26 60 00 Lighting and Plug Load Controls

C. Motion Detectors:

1. Generally, light switching to be done by motion detectors, except in high bay or HID light type areas, and any area where sudden darkness poses a hazard (i.e., chemical process area, equipment rooms, photo and laser labs, etc.).

2. Areas enclosed by ceiling high walls must be provided with motion detectors which control all light fixtures within that area.

3. Motion detector guidelines:

   a. Motion detectors shall be installed no closer than 4 ft. from air supply vents.

   b. In all rooms/offices the detector should be installed as to not allow scanning through the doorway.

   c. Motion detectors should not be installed above 12 ft. mounting height. Specialized detectors for tall aisles are to be considered.

   d. Subtract 5% of coverage for every foot the detectors are mounted above 9 ft.

   e. Subtract an additional 25% coverage if the detectors are installed in a carpeted and partitioned area.

4. Night lighting and emergency lighting shall not be switch controlled by motion detectors.

5. Hallway and corridor lighting shall be switched with motion detectors.

6. Each motion detector may control up to 8 light fixtures, but not more than 10. In partitioned open areas, each zone shall have coverage by motion detector(s) so that no blind spots exist.

7. The following statement is to be included with all lighting design where motion detectors are used:

   "Contractor shall engage the manufacturer's representative to perform initial adjustment and tune-up of all lighting motion detectors".

D. All light switches must be located inside the area whose lighting is being controlled. The switches must be located so that the operator can readily see the light fixtures being switched and be placed at the handle side of door openings.

E. Each light switch and motion detector shall be marked by means of a printed self-stick label with the panel and circuit number.

F. Do not surface mount switches on walls of corridors where vehicular traffic is likely to occur.

G. Switching of interior lighting shall produce quadrant type illumination patterns.

H. Switching of exterior building perimeter and parking lot lighting shall be by master photocell. In addition, switching of parking lot lighting shall have automatic time clock switching of approximately every other fixture to allow for reduction of lighting past midnight. 2-stage switching of LED fixtures is an alternative. Lighting for decorative purposes only is prohibited.

I. Switches added to existing facilities employing remote control of lighting by a lighting control system shall be connected to the existing system with the exception of private offices and equipment rooms which shall have standard light switches or occupancy sensors. These areas shall be independent and not be zone controlled by the lighting control system.

5.9 COMMUNICATIONS

A. Communication underground duct banks shall be extended into the building as applicable and shall consist of multiple 4 in. ducts.

B Communication lines shall be brought to the central telephone room. Telephone distribution to the building shall be provided from this room via cable trays, conduits, under floor ducts, etc., as required. Area phone cabinets fed by a main distribution system shall be provided. Provide 120 volt outlets in the telephone room. Cabinets shall be connected to the emergency power system, or to normal utility power when specified in the project requirements.

C. All telephone cables located at 14 ft. or higher above the floor shall be included in the electrical work, including raceways and cable hangers. Acceptable cable hangers are the Nylon strap sling.

D. All provisions (raceway, drops, conduit, sling, trapeze, ducts, pull strings, ropes) for telephone installation shall be part of this electrical work.

E. Provide telephone terminal back boards as required. . Provide with ground bus bar bonded to building ground. Install bonding jumpers between each cable tray. Install adequate conduit from terminal boards to telephone equipment rooms and cabinets.

F. Telephone wiring located in a ceiling plenum or under a raised floor shall be in conduit or shall be plenum rated cable

F. Pull ropes shall be included in all underground telephone ducts and all interior telephone conduits.

G. Telephone panels shall be recessed with hinged covers or doors so as to not protrude into any aisle. Refer to Section 9, Telecommunications Design Standards.

5.10 VOICE NOTIFICATION SYSTEM (VNS)

A. All facilities shall be equipped with a Public Address System (PA) connected to the plant wide PA system. For security purposes, LMSSC may delete the connection to the plant wide system. Although it is not to be considered a life safety compliant notification system, it shall be robust enough to be heard above ambient noise levels and powered by back-up generator. Refer to specification section 27 51 16 for complete PA requirements.

B. Refer to Section 9, Telecommunications Design Standards, for VNS room specifications.

5.11 SECURITY SYSTEMS

A. Refer to Section 6, Security Design Standards and Section 17, Security Systems Design Standards.

5.12 COMPUTER ROOM POWER

A. Computer systems are generally located in a raised computer floor area. Power for the computers is usually derived from a clean power source (typically a computer power conditioner system or UPS) fed by the building power system. Single point grounds are generally used as a part of this type of system.

B. Raised floor pedestals are to be grounded as a part of the computer room ground system.

C. Where power whips are specified, each receptacle shall be fed by an individual power whip and circuit breaker. Identify receptacle with circuit number and length of whip. When connected to a UPS power source, in addition to a circuit number, the receptacle cover plate shall be painted gloss yellow. Underfloor whips shall be plenum rated

D. Computer systems that incorporate a small mainframe unit shall not be supplied from Haworth Panels (i.e., DEC 2000 workstation Apollo 330, Apple Macintosh and Wang systems).

E. EPO – Emergency Power Off: Circuit shall be wired such that the trigger signal shall be a contact closure to energize a previously un-energized relay. Do not use an energized relay circuit to hold open a contact. The EPO manual station shall be encased in a clear cover polycarbonate material, (acceptable cover mfr: Safety Technology International, www.sti-usa.com 1-800-888-4sti)

5.13 BUILDING AUTOMATION SYSTEM (BAS)

A. All necessary provisions shall be made in the design of electrical systems to support the implementation of a BAS. These include sensors, control devices, instrumentation, motors, lighting, wiring and conduit. Refer to Section 16, Building Controls Design Standards, for detail requirements

B. The BAS design concept is to automatically control the operation of the building's mechanical and electrical systems in order to optimize energy efficiency, reduce

operating costs, provide preventive maintenance programs and aid in environmental protection and control. It includes the efficient monitoring, calculating and displaying of all utility energy sources used in the building. It requires individual metering of electricity used for HVAC, lighting, the total building, natural gas, and chilled and hot water supply sources. The concept is also to communicate to the central host computer.

C. Specifications for each design shall be coordinated with the Controls Engineering group of LMSSC Facility Engineering organization and approved by LMSSC Energy Coordinator to reduce costs and ensure compatibility with existing systems.

5.14 FACILITY MAINTENANCE ALARM SYSTEM (FMAS)

A. Refer to FMAS Design Standard Section 20 for the design of FMAS installations.

5.15 ALARM SYSTEM FOR BATTERY ROOMS AND UPS INSTALLATIONS

A. Comply with California Fire Code Section 608. Type of battery, electrolyte capacity or battery weight will dictate the requirements for alarm and monitoring.

B. Provide smoke detector within room located within 5ft. of room ventilation exhaust. Connect to Fire Alarm panel.

C. Provide continuous supplemental ventilation on emergency power sized to limit maximum concentration of hydrogen to 1% of total volume. of room or not less than 1 CFM per sq.ft area of room. Hydrogen sensors are required where emergency power is not available.

D. Hydrogen Monitoring

1. Hydrogen monitoring is required where emergency power is not available for continuous ventilation

2. Install one Hydrogen gas sensor at each battery cabinet. Locate sensor 12 in. above each enclosure, centered over vent and easily accessible for maintenance.

3. Hydrogen alarm panel: MSA Toxgard II with remote sensor, red strobe light, piezo buzzer, battery back-up (Cat.No. MSA# A-TOX-31-RX-0-1-1-B-0-0-K-00000.) Locate Toxgard sensors outside of room. Locate Toxgard panel on wall, no higher than 6ft to top, easily accessible for maintenance. Toxgard alarm contact is connected to FMAS interface panel (coordinate with LMSSC for point location) and UPS shut down circuit. Provide sign at Toxgard to read: WARNING: DO NOT ENTER IF RED LIGHT IS FLASHING OR ALARM IS SOUNDING. POSSIBLE HYDROGEN LEAK.

4. Provide s strobe and horn alarms within UPS room visible to personnel within room and outside room at entries. Provide sign near horn and strobe to read: WARNING EVACUATE IMMEDIATELY IF RED LIGHT IS FLASHING OR ALARM IS SOUNDING. POSSIBLE HYDROGEN GAS LEAK.

5. Provide 3 signs on exterior of each entry door, to read:

- WARNING: DO NOT ENTER IF RED LIGHT IS FLASHING OR ALARM IS SOUNDING. POSSIBLE HYDROGEN LEAK.

- ROOM CONTAINS ENERGIZED BATTERY SYSTEMS, AND ENERGIZED ELECTRICAL CIRCUITS.
- BATTERY ELECTROLYTE SOLUTIONS, WHERE PRESENT, ARE CORROSIVE LIQUIDS.

E. Provide method to preclude, detect and control thermal runaway per California Fire Code

F. Provide seismic protection per California Fire Code.

G. Provide battery spill control and neutralization per California Fire Code.

H. Cabinets shall have exterior labels that identify the manufacturer and model number of the system and electrical rating voltage and current of the contained battery system. There shall be signs within the cabinet that indicate the relevant electrical, chemical and fire hazards.

I. Provide 5 in. by 8 in. engraved plastic sign, white letters on black ground at exterior of each battery cabinet to read: BATTERY CABINET .

END OF SECTION

SECTION 6
SECURITY DESIGN STANDARDS

6.1 GENERAL

6.1.1 Correlation and Coordination

A. This section provides standards for Security design work. These design standards shall correlate with the current edition of Lockheed Martin Space Systems Company (LMS) Facility Engineering Standards (FES), Construction Specifications, Volumes I through IV, and other relevant sections of these Facility Design Standards. Where applicable, the Engineering Construction Details delineated in the FES Construction Specifications shall be used for compatibility to LMS existing facilities design or may be specified case by case by Physical Security.

B. The design shall be fully coordinated with other related architectural and engineering disciplines to eliminate conflicts and omissions, and to ensure that the total project requirements are met. Prudent judgment must be exercised in collaborating design solutions with LMS organizations and personnel. This standard takes precedence over construction specifications. Any discrepancies shall be resolved to comply with Section 6 Security Design Standards.

D. All design and construction drawings shall follow LMS drawing procedures and standards, unless described otherwise in specific Sections of this Facility Design Standard. Refer to Section 11, Drawing Procedures for all drawing requirements not addressed herein. Drawing requirements in this standard are general for the entire security system and supplement the detailed drawing procedures in Section 11.

6.2 DESIGN CONSIDERATIONS

6.2.1 Purpose

These standards describe applicable measures to prevent physical, electrical, visual and acoustical access and detect forceful or surreptitious entry into secure areas. Refer also to the functional requirements for the specific security classification of each facility, area or room. Specific engineering design requirements are developed by the LMS Physical Security organization for each project. Such specific design requirements modify, amend or supplement this section. The Requirements Matrix and Worksheet shown in Section 6.3 of this standard is used as the baseline requirement, as amended by Physical Security for each project.

A worksheet based on this matrix will be issued by Physical Security to call out specific requirements for each project. A Sample worksheet is included at the end of this section. The column to be used will be specified. Explanations of each requirement are given within the text of this section.

6.2.2 Requirements for Perimeters Separating Different Secure Areas

When two secure perimeters or two secure rooms adjoin, all requirements for each secure area shall be met as if the adjoining area were non-secure. For example, inspection ports would be required on both sides of ducts passing from one secure area into another. Alarm contacts and motion sensors would be required on both sides of a door between the areas. Wall construction methods would have to meet each independent areas security requirements. Only Physical Security may modify this requirement, after coordination with and approval by program customers and/or the AO (Accrediting Official).

6.2.3 Existing Construction

Where existing non-secure areas are to be upgraded to secure areas, all existing construction shall be fully upgraded to meet all design requirements. Alternate methods of achieving the design intent may be directed by the LMS Physical Security group in the specific engineering design requirements for each project.

This area left intentionally blank.

6.3 REQUIREMENTS MATRIX AND WORKSHEET

TO:	FROM:	DATE:
REFERENCE:	BLDG:	INFO:

Construction Requirements for: Building a generic Secure Area. Requirements may change depending on where the facility is and customer driven requirements. Security uses this worksheet to call out the specific project requirements. A separate worksheet is required for each secure area in a building.

CONSTRUCTION (See Paragraph 6.4)

		Required			Comments
1.	Wall height to structure	☐ Yes	☐ N/A	☐ No	True floor to true roof const (slab to slab) See para 6.4.1.A
2.	Perimeter wall sound STC	☐ Yes	☐ N/A	☐ No	Standard 45 STC/ 50 STC for amplified sound. See para 6.4.8.A
3.	Perimeter wall reinforcement	☐ Yes	☐ N/A	☐ No	Consult Phys Security See Para 6.4.C
4.	Ceiling and/or roof reinforcement	☐ Yes	☐ N/A	☐ No	Consult Phys Security See Para 6.4.C
5.	Window security	☐ Yes	☐ N/A	☐ No	Consult Phys Security See Para 6.4.5 alarms and opaque
6.	Paint/finish above false ceiling	☐ Yes	☐ N/A	☐ No	Consult Phys Security See Para 6.4.1.C

DOOR CONSTRUCTION (See Sect. 6.4.6)

7.	Door material	☐ Yes	☐ N/A	☐ No	Consult Phys Security See Para 6.4.6.B
8.	Door sound transmission class (STC)	☐ Yes	☐ N/A	☐ No	Standard 45STC- 3/ 50STC- 4 for amplified sound. See Para 6.4.8.B
9.	Sound Seals/ Drop sill/ sill plate	☐ Yes	☐ N/A	☐ No	All perimeter doors.
10.	Latch Guard	☐ Yes	☐ N/A	☐ No	All outward swing perimeter doors See Para 6.4.6.B.6
11.	Security Hinge Pins	☐ Yes	☐ N/A	☐ No	All ooutward swing perimeter doors. See Para 6.4.6.B.7
12.	Entry hardware	☐ Yes	☐ N/A	☐ No	Dead Latch function / door closer (Internal mount)
13.	Spin Dial/ Group Rating	☐ Yes	☐ N/A	☐ No	See Para 6.4.6.C.1
14.	Exit Hardware	☐ Yes	☐ N/A	☐ No	See Para 6.4.6.D
15.	Roll-up Door Material	☐ Yes	☐ N/A	☐ No	Minimum 18ga metal See Para 6.6.4.G
16.	Visual Deterrent	☐ Yes	☐ N/A	☐ No	Consult Physical Security

PENETRATIONS (See Sect. 6.4.7)

17.	Acoustically seal all holes	☐ Yes	☐ N/A	☐ No	Seal holes/ remove empty conduits. See Para 6.4.7
18.	HVAC Man-bars (all)	☐ Yes	☐ N/A	☐ No	See para 6.4.7.B LM spec V3-9, 13, 13A, 13B, 14
19.	HVAC inspection ports (all)	☐ Yes	☐ N/A	☐ No	Internally located. See para 6.4.7.C
20.	HVAC Non-conductive section (all)	☐ Yes	☐ N/A	☐ No	Provide in accordance with LM design spec
21.	HVAC sound baffles or masking (all)	☐ Yes	☐ N/A	☐ No	Consult with Physical Security See Para 6.4.8.E. S/M amplifier located in area.
22.	HVAC visual deterrent (open return)	☐ Yes	☐ N/A	☐ No	Z-duct on all transfer openings on wall pass-thru/ transfer ducts. LM spec V3-61, V3-63
23.	Conduit & Pipe Security	☐ Yes	☐ N/A	☐ No	Consult Phys Security See Para 6.4.7
24.	Label all utility/conduit penetrations	☐ Yes		☐ No	Per ICD/ICS 705 Ch.11, Sec I. (ICD 705 builds ONLY).

TELEPHONES/TELECOMMUNICATIONS (See Sect. 6.5)

25.	Secure telephone	☐ Yes	☐ N/A	☐ No	Consult Phys Security See Para 6.5.1
26.	Secure conveyance types	☐ Yes	☐ N/A	☐ No	Cat 5-E shielded or metal enclosure. Meet one overall shield
27.	Protected Distribution System (PDS)	☐ Yes	☐ N/A	☐ No	Meet NSTISS 7003. EMT/epoxy/NEMA typ12 control series pull-box with provision for padlock/red tape 5' o.c. LM design spec V4-114
28.	Non-secure telephone	☐ Yes	☐ N/A	☐ No	Consult Phys Security See Para 6.5.2

ALARMS (See Sect. 6.6)

29.	Alarmed doors	☐ Yes	☐ N/A	☐ No	Meet UL 2050 Extent III, UL products para 6.6.1
30.	Alarms above ceiling	☐ Yes	☐ N/A	☐ No	Consult with Phys Security See para 6.6.2

31.	Dedicated Alarm room	☐ **Yes**	☐ **N/A**	☐ **No**	PCU (Alarm Control Panel) must be within Secure area

32.	Alarm communication	☐ **Yes**	☐ **N/A**	☐ **No**	Meet 128 bit encryption (FIPS 140-2)
33.	Beacon lights	☐ **Yes**	☐ **N/A**	☐ **No**	Visitor control system. Audible enunciator See Para 6.6.3
34.	Alarms in room	☐ **Yes**	☐ **N/A**	☐ **No**	Consult with Phys Security. See Para 6.6.2 (Extent III)

ELECTRICAL & TEMPEST (See Sect. 6.7)

35.	Isolation of PA systems	☐ **Yes**	☐ **N/A**	☐ **No**	Provide isolation amp within Program area
36.	Red Black separation	☐ **Yes**	☐ **N/A**	☐ **No**	See Para 6.7.B & Design Std. Section 10 TEMPEST
37.	Utilities surface mounted	☐ **Yes**	☐ **N/A**	☐ **No**	See Para 6.4.7.D and See para 6.4.8.D/see LM spec V4-125
38.	Cell Phone Lockers	☐ **Yes**	☐ **N/A**	☐ **No**	Consult with Physical Security
39.	Inspectable space	☐ **Yes**	☐ **N/A**	☐ **No**	Consult with Physical Security

Additional Construction / Comments

6.4 CONSTRUCTION

A. The design features required for each type of secure area or secure room, are given in the Requirements Matrix and Worksheet above as amended by Physical Security for each project. This section describes the detailed design requirements for each of those features, if required.

B. The secure perimeter, new or existing, shall be constructed or modified to prevent any visual, acoustic and electronic surveillance, and to offer resistance to and evidence of unauthorized entry. Construction to satisfy these requirements is described below.

C. Where perimeter reinforcement is required, perimeter walls, floors and ceilings not constructed of concrete or masonry or equivalent strength material shall be reinforced with #9 (10 gauge) expanded metal. The sheets of expanded metal shall be spot welded every six inches to each other and along all perimeter and intermediate supports. Hardened screws with one-inch washers or hardened clips may be used in lieu of welding to fasten to metal or wood studs. The supporting wall shall be either 3-5/8" x 16 to 20-gauge steel studs, or 2 x 4 to 2 x 6 wood studs. This protection also applies to glazed/storefront walls with additional construction requirements as determined by Physical Security for the specific project.

6.4.1 Walls

A. Full Height Walls

Perimeter walls shall extend from the structural floor to the true ceiling or roof structure above. They may not terminate at the bottoms of open beams or trusses. See Section 6.4.8 for acoustical wall construction.

B. Modified Full Height Walls for DoD Closed Area Facility (Only)

For areas governed under DoD rules only, when walls are to be modified to meet full height requirements, Physical Security may be able to allow them to be extended from true floor to the roof with 18 gauge expanded metal or 11-gauge, 2-inch square wire mesh. This is subject to case-by-case review and customer needs.

C. Painting and finish above false ceiling and below raised floor to match room finish may be required on case by case basis. This is a specific customer requirement. Consult with Physical Security prior to design.

6.4.2 Ceiling

A. Ceiling plenums in secure facilities shall be designed to allow easy access into the area above the false ceiling, for inspection purposes.

B. Ceilings (true ceiling permanent structure) should be constructed to meet the same standards for force protection and acoustic protection as walls.

6.4.3 Floor

A. Floors shall be constructed to provide at least the same force protection and acoustic attenuation properties as the secure area walls. If a raised floor is used, the true floor must meet the requirement.

B. Existing in-slab Walker ducts, trenches, and similar openings extending under a secured wall from a non-secure area, will be secured with #9 (10 gauge) expanded metal, manbars, or other methods approved by Physical Security on a case by case basis.

6.4.4 Roof

A. The roof of a secure facility must meet the intent of Paragraphs 6.4 A, B, and C. Lightweight, high-strength concrete over metal pans is normally acceptable. Metal pan alone is not acceptable. Wood roofs may require reinforcement with expanded metal. As with walls, penetrations must be minimized and protected.

6.4.5 Window Security

A. All windows shall be non-openable from inside and outside.

B. All windows which might allow visual access into the facility shall be covered with translucent or opaque material that prevents visual access.

C. Windows less than 18 feet from ground or adjacent roof levels, platforms or ledges, or where reasonable access to window structures can be obtained, shall normally be walled over with a 9-gauge expanded metal reinforced permanent wall construction, equal in strength and density to that of the surrounding secure area wall. In some cases, a window film such as Armor-Coat Window Security Film 10 mil or Hanita Coatings 12 mil minimum thickness may be used, as directed by Physical Security.

D. If it is unacceptable to reinforce with either wall construction or an approved security film, an acceptable intrusion device must be used.

6.4.6 Doors

A. Conflicting Requirements- Minimum security requirements are outlined in this document. Fire and safety authorities may have additional requirements. Proper coordination shall be accomplished to ensure all requirements are met.

B. Door Construction- Doors must be a minimum of 1-3/4-inch thick solid core wood. Building exterior perimeter doors must be metal clad with a minimum of 16-gauge exterior face. All door frames must be firmly affixed to the surrounding wall and of sufficient strength to preclude distortion. Additionally, acoustically and RF protected areas require special doors which must meet these requirements as well as provide acoustic or RF protection. Specialty doors will be addressed on a case by case basis, but at a minimum, all doors shall meet the same acoustic level as the perimeter walls they are installed in; (45STC walls = 45STC doors). All doors shall display the STC rating on a tag permanently affixed by the manufacturer to the butt or top edge of the door. Door seals for acoustic doors shall be installed per manufacturer instructions. They may not be cut around door locking or latching hardware, door closers, alarm devices or other.

C. Entry Door Hardware for Secure Areas- (Product specification must be approved on a case-by-case basis by LMS Physical Security.) Normally only one entry door will be allowed to each secure area. It shall be equipped with the following:

1. A Group 1 or 1R combination lock complying with Federal Specification FF-L 2740A. This device combines an electronic restricted access control system with push/pull handle operation and integrated combination lock to meet both security and life safety. requirements. Note that model numbers change periodically, and the model for each project must be approved by Physical Security. LKM 10K with push/pull handle with S&G 2740 lock is current as of Jan 1 2020. Check with LM Physical Security for the most current device.

2. 1/8-inch drill resistant hard plate, mounted between the lock and door.

. Heavy duty (non-hold) door closer. The door must automatically re-latch when it closes, by either electro-mechanical or mechanical means alone, when released from a normal entry opening distance. Door closer will be installed within the secure area, where possible. Proper balancing of ADA, sound attenuation, air handling system considerations, and door construction type is necessary to ensure that all requirements are met. If fully operated ADA door openers are used, in the event of malfunction door opener must “fail-secure”.

4. An access control device (badge reader, mechanical or electrical cipher, keyed lock, etc.) as specified for the particular project and door. Key overrides to other devices are generally required. Dead latch functionality will be required for locking hardware on entry doors. The SSC standard for personnel work area entry door access control is a proximity card reader compatible with the corporate Assured Identity badge standard. Consult Physical Security. Also see subparagraph 1 above.

5. High security balanced magnetic alarm contacts meeting UL 634, levels 1 or 2 and/ or other level 2 sensors (Magnasphere etc.).

6. Security astragal - Latch guard for single doors; full length for double doors. The astragal is to be installed on all outward swing doors with accessible latch plate. Screws shall be tamper-proof design when accessible from non-secure side.

7. Hinges must preclude door removal without causing significant damage to the hinge or the door. At least 3 heavy duty steel hinges, reinforced to 7 gauge are required. If hinge pins are exterior to the secure area, they must be non-removable. This may be accomplished by set screws, or non-standard security hinges of special design utilizing safety stud technology. Single set screws in standard hinges would be acceptable. Spot welded hinge pins are not acceptable. Specially designed hinges must be approved on a case by case basis by Physical Security.

8. If visual security is a requirement then a sight barrier will be installed around the entry door inside the secure area. In some cases, construction of a vestibule may be required.

D. Emergency Exit Door Hardware- Emergency exit doors shall have no exterior hardware, and shall be equipped with the following:

1. Dead latching lock hardware that meets code and cannot be opened from outside.

2. High security balanced magnetic alarm contacts configured for 24hr alarm.

3. A local audible alarm, either built into the exit lock, or mounted independently may be required. Required for SCIF and SAPF facilities, but not required for DoD Closed Area construction.

4. Security astragal - Latch guard for single doors; full length for double doors. To be installed on all outward swing doors with accessible latch plate. Screws shall be tamper-proof design when accessible from non-secure side.

5. Hinges must preclude door removal without causing significant damage to the hinge or the door. At least 3 heavy duty steel hinges, reinforced to 7 gauge are required. If hinge pins are exterior to the secure area, they must be non-removable. This may be accomplished by set screws, or non-standard security hinges of special design utilizing safety stud technology. Single set screws in standard hinges would be acceptable. Spot welded hinge pins are not acceptable. Specially designed hinges must be approved on a case by case basis by Physical Security.

6. A heavy-duty non-hold door closer. The door must automatically re-latch when it closes, when released from a normal entry opening distance. Door closer will be installed within the secure area, where possible.

7. If visual security is a requirement then a sight barrier will be installed around the exit door inside the secure area.

E. Equipment doors will be addressed on a case by case basis.

F. Specialty door hardware / Acoustic Seals

1. When door hardware (door closers, alarm contacts, strike plates, etc.) cannot be installed without cutting the acoustical seals; a “Z” bracket must be used to offset the hardware around seals. Acoustic seals shall not be cut or modified around locking or other door hardware. They must be installed exactly per the seal manufacturer instructions and must not leave any air gaps. A bead of acoustical caulking will be applied between the seal casing and door frame to ensure proper acoustic seal. Other accommodations must be made for other door hardware. This should be identified early in the design as this is critical when ordering factory prepped doors.

G. When required, Roll-Up Doors will be constructed on both sides of 18-gauge metal. Power source will contain on/off switch and be located within secure area. Power source will be secured with a padlock that controls the up/down switch and the chain that raises and lowers the door. Roll-up doors will be equipped with dead bolts on both edges of the door, within the secure area. Roll-Up Door will be equipped with high security balanced magnetic door contacts on both edges of the door, within the secure area. If visual security is a requirement then a sight barrier will be installed around the roll up door inside the secure area. In rare cases, where the control motor is located outside the secure area, the chain over-ride must be routed to within the secure area and secured from inside the area, and a metal protective cover must be installed to prevent unauthorized access to the mechanism on the unsecure side.

H. Refer to FES Construction Specifications, Volume II, Architectural and Structural, Division 8, for descriptions of listed hardware items. Modifications of hardware groups may be required to comply with Paragraphs 6.4.6 A, and C.

6.4.7 Penetrations through Secure Area Perimeters (walls, roof, floor)

A. Sealing Holes

When sealing of holes is required, all holes and gaps, including small ones around utility penetrations or at wall/roof joints, shall be completely sealed with a self-hardening material, or with a specially made acoustic sealant. The sealant shall be applied in a neat manner, on both sides of the wall.

B. Man-bars

All openings in the secure perimeter greater than 96 square inches shall be equipped with either a man-bar assembly, metal grills, or commercial metal duct sound baffles. If bars are used, they must be ½ inch diameter steel bars welded vertically and horizontally 6 inches on center; if grills or expanded metal are used they must be #9 (10 gauge) expanded metal and permanently affixed to the secure perimeter wall. If commercial baffles are used, the baffles or wave forms must be metal, installed no farther apart than 6 inches in any one dimension and permanently affixed to the duct. All duct sound baffles will meet appropriate sound attenuation of the wall in which it passes through. Wire mesh may be called out for some DoD areas. Mesh will be at least 18 gauge and no larger than two-inch square in any one dimension.

C. Inspection Ports

All ducts shall have easily accessible hinged inspection/access ports. These ports will normally be installed on the secure side of the perimeter. This will allow the inspection and maintenance of installed security devices and barriers and permit the examination of the interior of the duct. Hinged access covers shall be equipped with a hasp and staple for 3/8" shank, (permanently attached to the access port), case by case, as determined by LMS Physical Security for securing the cover with a padlock. All hinges, pins, and hasps shall be non-removable.

D. Utility Penetrations

Utility penetrations shall be minimized, and where practical shall enter at one point. Required utility penetrations of the sound rated envelope shall incorporate the following features.

1. Conduits and Pipes

a. Acoustical sealant shall be applied to each side of the wall around conduits or pipes.

b. Open ended pipes or conduits stubbed through security walls shall be filled with acoustical sealant or expandable foam and capped from inside the secure area. When two secure areas come together sharing a common penetration, the penetration shall be secured equally for each area.

c. Abandoned conduit or pipes shall be removed from the secure area. If removal is unfeasible, the abandoned conduits shall be sealed, capped and marked as abandoned. When two secure areas come together sharing a common penetration, the penetration shall be secured equally for each area.

d. All utility boxes that enter or exit a secure area may require a condolet or means for sealing the conduit or pipe at the wall penetration. If condolets are not practical for existing utilities, the sealant can be applied at the nearest junction box to each wall. Non-metallic condolets, offering dielectric properties will be required for all new penetrations as specified by LMS Physical Security group. If dielectric connections cannot be applied, grounding within the secure area will be required.

e. Utility penetrations shall be clearly identified and labeled at each entry/exit point through the perimeter of the secure area per ICD 705 for all ICD compliant secure areas, and intermittently marked as directed by the LMS Physical Security group.

2. Conduits or pipes may require electrical decoupling, by installing non-conductive sections or by connecting them to a ground or potential plane inside the secure area, as specified by LMS Physical Security group.

E. Structural Beam Penetrating Sound Rated Construction

Beam penetrations must be constructed to maintain the acoustic integrity of the surface they penetrate. This typically involves insulating, sealing holes/gaps, or enclosing the beam in sound rated construction, by completely encapsulating the beam with frame and drywall construction. Each project will be individually evaluated by Physical Security.

F. Recessed Items in Sound Rated Construction

The installation of recessed items such as fire hose cabinets on sound rated walls shall be avoided. When unavoidable, the recessed portion of the wall shall be designed to fully meet the STC rating of the wall. Existing recessed items shall be removed as necessary to achieve required sound attenuation. Note that all pipes and conduits that serve such recessed items must be surface mounted. If there are recessed utility boxes supporting adjacent areas that cannot be removed, a fire or acoustic putty or both shall be applied over the utility boxes to ensure the acoustical integrity of the wall. An acceptable fire putty is HILTI Firestop putty CFS-P-PA, part P80898-770.

6.4.8 Acoustic Controls

A. Perimeter Sound Rating

The walls, ceiling and floor enclosing a secure area or room shall be constructed to meet the minimum Sound Transmission Class (STC) specified. Acoustical sealant will need to be applied on both sides of the security wall where wall section contacts, floors, roofs, bulkheads, other walls, etc.

B. Sound Rated Doors

Doors and frames shall have a minimum STC rating no lower than that of the walls. They shall be installed in accordance with the manufacturer's instructions. All sound rated doors will legibly display the STC rating on a tag permanently affixed to the door.

C. Amplified Sound

Where amplified sound is to be used, speakers shall not be mounted on secure perimeter surfaces.

D. Surface Mount Utilities

All conduits, pipes, ducts and other utilities shall be surface mounted on acoustically rated walls. Existing utilities concealed within existing walls shall be removed when such walls are to be upgraded to acoustic walls, unless otherwise directed by the LMS Physical Security group. In some cases where aesthetics is a concern, a utility wall can be constructed inside the secure wall to hide the utilities. This wall need only go beyond T-bar by six inches and may be constructed of one layer of gypsum board.

E. Duct Sound Baffles or Masking

Ducts through sound rated construction shall be equipped with sound masking, transducer devices, or sound trap/baffles on the secure side of the wall.

F. Security Signage

Provide signage as required by Physical Security.

1. Non-Discussion Area
2. Emergency Exit Only Alarm Will Sound
3. Perimeter door #'s will be affixed to all secure area perimeter doors both interior and exterior locations.

6.4.9 Vault Requirements

A. Vault requirements will be addressed on a case by case basis.

6.5 TELEPHONES/TELECOMMUNICATIONS

6.5.1 Secure Communications Systems

A. Specific design requirements will be issued by LMS Physical Security group on a case by case basis.

6.5.2 Non-Secure Communications Systems

A. An approved dedicated telephone system or TSG approved phones shall be used in all ICD constructed areas. The entire system shall be installed within the secure area. TSG approved phones or computerized phone systems (CTS), installed (alsoTSG-2) must be approved by LMS Physical Security group for all ICD construction methods. TSG approved phones may be the most desirable and economical approach for secure areas. Standard, non-TSG telephony units may be used for commercial and DoD use. VOIP phones are commonly used and any VOIP phone used for ICVD areas will need requires a TSG #. All telephones deployed in either DoD or ICD areas will have the speakerphone permanently disabled at the phone itself, not the switch.

B. All communication wiring for the telephone and data systems shall enter the secure area at s single point. All conductors shall be identified and accounted for by use of a wire identification chart maintained within the wire closet. All unused excess conductors shall be removed from the area. If removal is prohibited by cost or other reasons, all unused, excess conductors shall be tied together and connected to ground at the initial demarcation point. If Red/Black separation or line filter requirements apply, specific wire routing must be approved by Physical Security.

C. The telephone instruments to be used within the secure areas shall be equipment approved by LMS Physical Security group.

D. When communication filters are required, refer to Section 9, Telecommunications Design Standards.

6.5.3 Beacon Lights

A. When required by Physical Security, rotating red beacon lights with audible alarms shall be installed so that they are visible to all area occupants. Main switch to turn the lights on and off will be located at the entrance to the secure area. Additional Switches may be required at or near roll up doors and/or equipment doors. (Consult Physical Security on a case by case basis for applications)

6.6.2 Interior Alarms

A. Below False Ceiling

Passive Infrared motion sensors will be installed and located to cover paths most likely to be used by intruders. LMS Physical Security group must approve all security alarm layouts prior to installation. Customer approval of new alarm system installations is required. Adequate time must be allowed for customer approvals prior to installation.

B. Above False Ceiling

A Passive infrared motion detection system may be required on a case by case basis. LMS Physical Security group must approve all security alarm layouts prior to installation.

C. Below False Floor

A Passive infrared motion detection system may be required on a case by case basis. LMS Physical Security group must approve all security alarm layouts prior to installation.

D. Along Perimeter walls

A Passive infrared motion detection system may be required on a case by case basis. LMS Physical Security group must approve all security alarm layouts prior to installation

6.7 ELECTRICAL AND TEMPEST

A. Radio Frequency (RF) Shielding Requirements

There is no direct relationship between the area types in this section and RF shielding requirements. The matrix in Paragraph 6.3 will only state whether RF shielding measures are required. If required, refer to Section 10, Tempest Design Standards for RF shielding design information. Physical Security will define specific requirements for each project.

B. Red Black Separation

Electrical conductors which carry classified information must be physically separated from wires or other conductors which do not. Specific requirements will be made on a case by case basis by Physical Security. Refer to Section 10, Tempest Design Standards for more information.

END OF SECTION

SECTION 7
SAFETY DESIGN STANDARDS

7.1 GENERAL

7.1.1 Correlation and Coordination

A. This section provides standards for the inclusion of Safety in all design work. These design standards shall correlate with the current edition of Lockheed Martin Space Systems Co. (LMSSC) Facility Engineering Standards (FES), Construction Specifications Volumes I through IV, and all sections of this Facility Design Standards. Where applicable, the Engineering Construction Details delineated in the FES Construction Specifications shall be used for compatibility to LMSSC existing facilities design.

B. The Safety design work shall be designated under the current Construction Specifications Institute (CSI) format.

C. The design shall be fully coordinated with other related architectural and engineering disciplines to eliminate conflicts and omissions, and to ensure that the total project requirements are met. Prudent judgment must be exercised in collaborating design solutions with LMSSC.

D. All design/construction drawings shall follow LMSSC drawing procedures and standards, unless specifically described otherwise in specific Sections of this Facility Design Standards. Refer to Section 11, Drawing Procedures for all drawing requirements.

7.1.2 Design Philosophy

The design shall be done in a manner to assure that the maximum benefit is obtained for the costs expended. Safety, quality, reliability, and maintainability shall not be compromised as a cost saving measure.

Incorporation of energy-saving and pollution-reducing measures, including pursuit of LEED Silver certification, is encouraged and may be required; consult with LMSSC project manager. Refer to specification section 01 81 13 for specific LEED requirements.

The methods of analysis and design shall follow the established principles of professional engineering practice.Value Engineering is encouraged during the development of the design of all systems. Life cycle cost calculations shall be part of value engineering proposals.Energy efficiency shall be considered in the interior and exterior lighting design.

7.1.3 Codes and Standards

Design work shall comply with the current adopted edition of all applicable city, county, state and federal codes and standards. In addition, the current adopted edition of the following codes, standards and publications, are considered as the governing references to this section. Applicable recommendations of related trade and professional associations not listed here shall also be considered.

A. Occupational Safety and Health Standards:

1. California Code of Regulations

   Title 8, General Industry Safety Orders (Cal-OSHA)

2. Occupational Safety and Health Administration (OSHA)

   29 CFR 1910 General Industry Standards

B. Hazardous Materials

Handling, use and storage of hazardous materials shall comply with:

1. Local City Hazardous Materials Storage Permit Ordinance. In Sunnyvale, this is known as Title 20 and in Palo Alto, it is Title 17. The regulations for each City in Santa Clara County are equivalent.

2. Uniform Fire Code (UFC) in particular:

Article 51	Semiconductor Fabrication Facilities Using Hazardous Production Materials
Article 79	Flammable and Combustible Liquids
Article 80	Hazardous Materials

3. California Building Code (CBC) for H-Occupancies

4. SSC Standard 1.3.3-T1-ESH-28.0-S, Hazardous Material Storage

5. Local City Toxic Gas Ordinance

6. Section 13, Environmental Design Standards, of FES Design Standards.

7.1.4 Other Related Codes and Standards Requirements

California Building Code (CBC)
California Fire Code (CFC)
Code of Federal Regulations
Local Municipal Codes
California Health and Safety Code, Sections 25500 - 25541.
American National Standards Institute (ANSI)

7.2 GENERAL DESIGN REQUIREMENTS

A. LMSSC may provide a list of hazardous materials to be used or stored by area of building (trade name, manufacturer, and maximum quantity on hand) so that the appropriate section of CFC can be followed. The Designer must submit calculations for design of treatment systems required by CFC and/or Toxic Gas Ordinance, and for secondary containment per local City Hazardous Materials Storage Permit Ordinance.

B. If chemical storage cabinets are utilized, they must comply with the requirements in CFC. Note that they must be equipped with self-closing, self-latching doors. Existing non-code-conforming cabinets may not be relocated. All cabinets must be seismically braced.

C. Flammable or combustible liquids may not be used or stored in basement areas. Exterior storage areas outside of the security perimeter must be secured by a fence and lock or other means.

D. When designing projects that involve the use of hazardous materials in the construction process, develop supplemental specifications as necessary to highlight environmental protection procedures required per all city, county, state and federal regulations.

7.3 VENTILATION (FOR CONTROL OF HAZARDOUS MATERIALS)

A. All ventilation systems must comply with the performance criteria in the American Conference of Government Industrial Hygienists “Industrial Ventilation Manual”, current adopted edition.

B. The exhaust systems shall be designed, constructed, maintained and operated by requiring a volume and velocity to prevent harmful exposures by dispersing the contaminants into the exterior environment in accordance with local air pollution regulations. Absorption, filtration or scrubbing are methods that may be required. The requirements depend upon the materials, processes, volume, etc. Refer to Section 13, Environmental Design Standards.

C. Each exhaust system venting hazardous materials shall be equipped with a static pressure indicating device for detection of adequate exhaust function. Each drop needs a separate gauge.

NOTE: Manometers are not recommended due to upkeep requirements.

D. The stack discharge of the exhaust system shall be greater than 6 feet above the roof line but not in the close proximity of air intake vents.

E. Provide access for large diameter duct clean-outs or traps.

F. Refer to Section 4, Mechanical Design Standards.

7.4 ELECTRICAL

A. LMSSC ESH HERITAGE STANDARD, Volume 1, Section 2.3, Control of Lasers.

B. All electrical requirements shall comply with Section 5, Electrical Design Standards.

7.5 LASERS

Continuous wave lasers producing a beam power over 50 milliwatts and Class IV lasers shall be installed in a laser controlled area when the laser beam is accessible to individuals. A laser controlled area is described in LMSSC 1.3.3-T1-ESH-39.0-S.

7.6 RADIATION-PRODUCING DEVICES

All installations of ionizing radiation-producing devices shall comply with:

A. LMSSC 1.3.3-T1-ESH-82.0-S & 1.3.3-T1-ESH-48.0-S, X-Ray Machine Safety and RF & UFRadiation Safety.

B. California Code of Regulations, Title 17, Chapter 5, Subchapter 4, Radiation.

C. Code of Federal Regulations, 10 CFR, Part 20, Standards for Protection Against Radiation.

D. Code of Federal Regulations, 21 CFR, Part 1020, Performance Standards for ionizing Radiation Emitting Products.

7.7 PRESSURE SYSTEMS

Requirements for pressure systems are contained in LMSSC ESH HERITAGE STANDARD, Section 4, Pressure.

7.8 ASBESTOS

A. No asbestos-containing construction materials shall be installed without prior approval from LMSSC. Justification for use of asbestos-containing materials rather than non-asbestiform materials shall be provided.

B. If removal of asbestos-containing construction materials is required in the course of the project, the Designer shall specify that this shall be done as an "asbestos abatement" project. The removal shall be done by a certified asbestos-removal contractor, unless LMSSC has determined otherwise that due to the size of the project or the physical nature of the asbestos-containing construction material that such removal will not release significant amounts of asbestos fibers. Contact LMSSC for further testing of existing materials for asbestos content, and procedures for the asbestos removal if needed.

C. Commonly encountered construction materials that may contain asbestos include:

1. Asphalt/vinyl floor tiles and mastics
2. Linoleum
3. Roofing materials
4. Fireproofing materials (typically spray-on on structural beams)
5. Acoustical spray-on type materials
6. Thermal insulation (e.g., boilers, piping), especially joints
7. Transite
8. Asbestos-cement water/sewer pipe
9. Stucco
10. Joint compound on sheet rock walls
11. Terrazzo

D. References

1. California Health and Safety Code, Section 25915 ET SEQ

2. Code of Federal Regulations, 29 CFR 1926.58

7.9 LEAD/CADMIUM

Metal structural surfaces may be coated with a lead or cadmium-based paint or primer. Any demolition work involving cutting or welding, and any construction work including welding or grinding on these surfaces, must be performed in a manner which conforms to the Cal/OSHA Lead or Cadmium standards.

7.10 ROBOTICS

Robot installation must comply with ANSI R15.06.

7.11 CRANES

LMSSC 1.3.3-T1-ESH-1.0-S, Accessory Hoisting Equipment.

7.12 OTHER REFERENCES

A. LMSSC ESH HERITAGE STANDARD, Volume 1, Section 6.6, Color Code for Floor Marking.

B. LMSSC ESH HERITAGE STANDARD, Volume 1, Section 6, Facilities and Equipment, as applicable.

END OF SECTION

SECTION 8
FIRE PROTECTION DESIGN STANDARDS

8.1 GENERAL

8.1.1 Design Philosophy

The design shall be done in a manner to assure that the maximum benefit is obtained for the costs expended. Safety, quality, reliability, and maintainability shall not be compromised as a cost saving measure.

Incorporation of energy-saving and pollution-reducing measures, including pursuit of LEED Silver certification, is encouraged and may be required; consult with LMSSC project manager. Refer to specification section 01 81 13 for specific LEED requirements.

The methods of analysis and design shall follow the established principles of professional engineering practice. Value Engineering is encouraged during the development of the design of all systems. Life cycle cost calculations shall be part of value engineering proposals. Energy efficiency shall be considered in the interior and exterior lighting design.

8.1.2 Related Sections

A. Facility Engineering Design Standards
   1. Section 4.4.3 Air Distribution: paragraph F gives requirements for fire dampers.
   2. Section 5.4 Smoke/Fire Detection System
   3. Section 5.14 Emergency Notification System (ENS) Audible Alarms only.
   4. Section 5.16 Computer Power
   5. Section 11.7 Fire Protection Drawing Standards
   6. Section 17 Security and ENS Systems

B Facility Engineering Construction Specifications
   1. Section 28 31 00 Fire Detection and Alarm Systems.

C Facility Engineering Construction Details
   A. V4-46-70 V4-46-99: Emergency Notification System details

8.1.3 Codes and Standards

A. Comply with the latest edition of all applicable cities, county, state and federal codes and standards. Comply with recommendations of related trade and professional associations. Some of the relevant publications are listed below:

   California Code of Regulations (CCR)
   California State Fire Marshal Office, Approval Listing Guide
   Factory Mutual Engineering Corporation (FM), Approval Guide and Loss Prevention Data Sheets
   California Mechanical Code (CMC)
   National Fire Protection Association (NFPA) Standards, National Fire Code (NFC)
   Underwriters Laboratories (UL), Directories and Standards

B. For Navy Facilities comply with US Department of Defense United Facilities Criteria: Fire Protection Engineering for Facilities.

8.1.4 LMSSC Fire Marshall Approval

B. Fire alarm, detection and extinguishing systems and equipment that are not approved in this design standard shall not be used without written justification and advance approval, prior to construction, by the LMSSC Fire Marshal.

C. The LMSSC Fire Marshal shall have final authority over placement of all fire system related equipment and devices, access paths and clearances.

D. During Design, submit the following to LMSSC Fire Marshal for review and comment.

1. Fire alarm and suppression systems, including equipment make, model, communications details, and design layouts
2. Smoke detection systems, including equipment make, model, and design layouts

8.1.5 Emergency power

A. Emergency power shall be provided for fire systems.

8.1.7 Drawing Requirements

A. Underground fire protection piping, including valving, and hydrants, shall be shown on all appropriate project drawings, including the permit drawings for the site package.

B. Show the location of 4 inch and greater diameter sprinkler piping on the building drawings.

C. Show fire alarm communications circuits on fire alarm drawings.

8.2 ARCHITECTURAL REQUIREMENTS

8.2.1 Walls

A. Security walls and doors may not be fire rated and shall not be assumed to have fire ratings unless documented by record drawings, when available, and verified by field inspection

8.3 FIRE ALARM SYSTEM

8.3.1 Fire Alarm System Functions

A. The Fire Alarm System performs the following functions.
1. Report to Central Monitoring Station.
2. Monitor the sprinkler water flow,
3. Shut down HVAC on smoke detection.
4. Activate horn and strobe emergency notification when a manual pull station is operated.
5. Monitor Emergency Notification Systems.
6. In special areas, sense smoke and heat and initiate Emergency Power Off Systems, Fire smoke dampers and Special Fire Suppression Systems.

8.3.2 Central Monitoring Station.

A. The Central Monitoring station receives data from all building FACP's. The LMSSC Fire Department Central Monitoring Station is located in Sunnyvale Building 141.

B. The two approved monitoring systems for Sunnyvale and Palo Alto facilities are the Mastermind monitoring system (Which incorporates Surgard III receivers) and the Siemens NCC-Wan system for. Any additional receivers, including FIPS 140-2 AES encrypted receivers, must be compatible with at least one of the existing monitoring systems.

C. Signals shall be transmitted from the building Fire Alarm Panel to the Central Monitoring Station per the manufacturers approved interface. Fiber optic cable interfaces and appropriate converters at each end are preferred, and are required by some manufacturers. Any copper wire paths used shall be lower than 100 ohms resistance total end to end, with greater than 10 megohm resistance to ground. FM and NFPA approved wireless communications technologies are also approved for use at SSC facilities, provided that they use FIPS 140-2 AES approved encryption (this is the DoD basic encryption approved level). The LMSSC approved product is the AES Intellinet™ wireless transmitters and receivers because they are also DoD approved.

D. When signal lines are not available, such as from remote facilities, leased commercial data lines shall be used, either fiber optic or type 3006 dry pair, or other type compatible with the fire alarm system equipment. When using type 3006 dry pair, lines must be below 50 ohms end to end.

8.3.3 Fire Alarm System Operation

A. When any Fire Alarm initiating device is activated, the system shall function as follows:
   1. The supervised audible and visual alarm devices shall automatically operate in all zones.
   2. An indicator shall light on the base of the smoke detector initiating the alarm. The system will alarm even if this indicator is not functional.
   3. All of the above indications will remain "locked on" until the system is manually reset at the building FACP.

B. Failure of any initiating device shall cause the System to function as follows:
   1. A visual and audible indication shall be activated at the building FACP. The visual signal shall indicate the zone of the trouble condition.
   2. If an alarm develops while there is trouble condition existing, the alarm condition shall have higher priority than the trouble indications. The trouble indication shall remain until the trouble condition is corrected.

8.3.4 Fire Alarm Keypads

A. Fire alarm system control keypads shall be provided in sufficient quantity and placement to facilitate required system testing without requiring excessive travel or additional personnel.

B. In buildings exceeding three stories, there shall be at least one control keypad on every other floor, starting at ground floor. There shall be at least one keypad on roofs that have penthouses or duct smoke detectors.

C. In large buildings, single or multi-story, there shall be multiple points of system reset within reasonable walking distance, to be determined during design. Desired maximum distance is approximately 300 feet along normal travel paths.

8.3.5 Fire Alarm Panels

A. Full service leased facilities with their own existing fire alarm equipment are exempt from this requirement, but all new equipment installations must comply.

B. Building fire alarm control (FACP) panels shall communicate with one of the two monitoring systems installed at the LMSSC Central Monitoring Station.

C. In Sunnyvale and Palo Alto facilities the FACP shall be Siemens MXL/XLS compatible equipment. In the Santa Cruz facility the FACP shall be compatible with Surgard III receiver.

D. In no case shall an 'intelligent' alarm panel with multiple alarm points be connected to the monitoring station through a single point on any intermediate panel such as a non addressable unimode. All intelligent panels shall be connected to Central Monitoring Station directly without any intermediate panels.

E. Where there is not enough room in an existing building FACP to add new points, for fire alarm, consult with the LMSSC Fire Marshall to determine the appropriate course of action

F. The FACP shall be connected to emergency power circuits that are powered by emergency generators when commercial power fails. This is in addition to the normally provided backup batteries in the panels.

8.3.6 Emergency Notification System

A. The LMSSC standard Emergency Notification System (ENS) is a manually activated horn and strobe system.

8.3.7 HVAC Shutdown on Smoke Detection

A. Smoke detectors shall be installed in supply air systems and connected to the building FACP which in turn controls shutdown of air handling fans.

B. HVAC systems which require an automatic shut off shall be alarmed. The alarm circuit shall be connected to the building main FACP.

C. For air handlers equipped with humidifiers, smoke detectors shall be located upstream of the dispersion tubes. If this is not possible because of the location of the dispersion tubes, locate at least 25 feet downstream of the dispersion tubes.

8.3.8 Bypass Systems

A. Provide a manual or programmed bypass for the following alarm functions

1. Audible alarms
2. Air handler shutdown
3. Fire smoke damper shutdown
4. Door holder release
5. Roll-up door

6. EPO switch
7. Chamber doors
8. Water flow bells
9. Suppression system agent release

8.3.9 Smoke Detector Bypass

B. Smoke detector maintenance bypass control shall be installed to facilitate routine compliance inspections of the smoke detectors. The control shall provide individual control for the fire alarm functions for each air handler.

C. For all air handlers supporting areas that must stay in operation, such as clean rooms, high bays and computer rooms, locate a maintenance bypass key-switch control adjacent to the air handler control box in the fan house. A relay shall send a supervisory signal to the monitoring station when the system is bypassed. The bypass switch shall have a red blinking LED that indicates the bypass switch is active.

D. When placed in 'bypass', the bypass control shall prevent all associated smoke detector driven automatic fire functions from operating.

E. When taken out of 'bypass', and returned to 'normal', all normal system functions shall be restored, the trouble alarm shall be cleared, and the local indicator and Central Monitoring Station shall show the current system status.

F. The controls shall be located next to each other at the FACP or Air Handler when feasible, with a permanent label identifying both the function and which air handler it affects.

G. Key switches shall be provided when there are fewer than four controls. For five or more controls a single remote keypad shall be used instead of key switches.

H. Bypass controls shall have either a text display or, for maintenance key operated bypass switches, a red and green light display.

8.4 FIRE PROTECTION FOR SPECIAL AREAS

8.4.1 General

A. Special areas are rooms where very high value equipment, records and processes reside. They will be uniquely defined for each project. They typically include environmentally controlled areas such as raised floor equipment rooms, data storage vaults, clean rooms, and high bays,

B. Fire protection systems in special areas sense smoke and heat and initiate Emergency Power off Systems, HVAC systems and Special Fire Suppression Systems. They report directly to the Central Monitoring Station. No inter-panel logic is allowed for these systems.

C. Fire Suppression Systems for Special Areas include Gaseous Systems and dry pipe pre-action systems. Gaseous systems are intended to suppress fire, whereas dry-pipe systems are intended to prevent the accidental discharge of sprinkler systems that may damage equipment.

D. The Fire Suppression System for Special Areas includes the following.
   1. Smoke and heat rate of rise detectors
   2. Time Activation Control Function.
   3. Manual Activation Switch and abort switch
   4. Gaseous Fire Suppression Systems

8.4.2 Smoke Detectors in Special Areas

A. Where required only by local Jurisdictions the smoke detectors under raised floors shall not be cross zoned.

B. Smoke detectors shall be both under floor and under ceiling.

C. Detectors in special areas shall be cross zoned. Activation of two smoke detectors in cross zone pattern shall activate the time activation function.

D. Smoke detectors shall be installed under all raised floors.

E. The smoke detectors shall be plug-in combination photo-electric and heat detectors, and indicated at control panels.

F. Remote test capabilities shall be installed for smoke detectors. Test switches shall be located at the fire alarm control panel.

8.4.3 Timed Activation Control Function (TACF)

A. Upon activation of single smoke detector, the local FACP shall initiate a local alarm and send a signal to Central Monitoring Station. Upon activation of two cross zone detectors the FACP shall start the 90 second timer and the TACF will de energize the equipment and AHS in the affected areas and initiate the pre action system in that area.

B. Standard timer setting prior to discharge and EPO is 90 seconds. The timer shall stop counting down and reset to 90 seconds when the ‘abort’ button is depressed. The Timer display shall indicate the reset and frozen count. If the abort switch is released, prior to the system being permanently reset at the fire alarm control panel, the system count down shall resume and all discharge and emergency power disconnects shall occur if the time expires.

C. The timed activation control function shall perform the following functions.
   1. Shutdown all power and air conditioning systems to the affected area except overhead lights.
   2. Activate motorized dampers,
   3. Release any special suppression systems.

D. Existing assemblies shall be replaced by modern programmable panels when their performance becomes questionable.

E. Time control functions to meet NFPA 72, 12A, 13, and 2001 for cross-zone protection shall be programmed into intelligent fire alarm control panels as required for each area.

F. Time Activation Function shall include:
   1. Indicating timer – either an analog or digital display, located within view of abort switch.

2. Abort switch with Sonalert protected to prevent accidental usage.
3. Two-step (such as lift cover, pull handle) manual activation switch.
4. Key operated maintenance by-pass switch.
5. Relays for all electrical connections
5. Lights and alarm

8.4.4 Signage

A. Provide appropriate signage to identify manual activation and override controls for emergency fire suppression and emergency power off systems, including system abort and timer controls/displays.

8.4.5 Gaseous Fire Suppression Systems

A LEED Requirements (if pursued, consult with architect/ LMSS project manager):

1. No Halon, CFC, or HCFC Gaseous Fire Suppression Systems are allowed. (Credit EA4)

B. Approved gaseous fire protection systems shall be installed on a case by case basis only when appropriate justification is provided and specific conditions of use are developed.

C Combination smoke and fire dampers shall be installed on all HVAC penetrations through all perimeter surfaces in order to maintain the concentration of the gaseous fire suppression system within the room.

8.6 SMOKE PURGE FOR GASEOUS FIRE SUPPRESSION SYSTEMS

A. CO2 systems: Provide smoke purge switches controlling motorized dampers in air ducts and restart of air handling fans in the Fire Alarm Control Panel, with appropriate interface to the Building Automation System.

B. FM200 systems: Provide smoke purge as required by the Authority Having Jurisdiction

8.7 FIRE PROTECTION SPRINKLER SYSTEM (WET)

A. Wet systems should not be installed in high-value areas such as high-bays and test chambers. These areas require dry pre-action sprinkler systems. This is due to the extremely high cost and program impact should there be an accidental discharge or even leakage. Wet systems should be approved by users prior to installation.

C. Bollards shall be provided for all locations, both interior and exterior, where sprinkler piping and valving is subject to potential vehicular damage.

D. Sprinkler systems are exempt from the security requirement of placing mesh screen wave guides inside pipes at their point of penetration through security walls, floor or ceiling. Follow the provisions in FES Construction Specifications, Volume III Detail titled “Sprinkler RF Test Separation.”

E. Automatic Sprinkler riser(s) shall be located as to be accessible to conduct testing and maintenance.

8.8 DRY PIPE FIRE SUPPRESSION SYSTEM

A. Dry pipe systems are appropriate for high cost equipment areas which are designated by programs and users.

8.9 HORIZONTAL CAROUSEL RACKS

A. Provide reinforced overhead sprinkler protection based on the commodity classification and the rack height.

B. A complete smoke detection system shall be installed directly over the flue spaces (aisles). This system shall be connected to the Fire Alarm Control Panel and shall upon activation shut down the carousel.

8.5 FACILITY MAINTENANCE ALARM SYSTEM (FMAS)

A. The FMAS is not a part of the Fire alarm and Fire protection system. It is intended to provide warnings due to failure of critical equipment, abnormal conditions in critical areas and certain life safety situations such as low oxygen. It is monitored by the facility technical maintenance. Refer to FMAS design standards for more information.

8.10 ACCESS FOR MAINTENANCE AND INSPECTION

A. All fire alarm and smoke detection, suppression, and related system components shall be located to allow easy access for preventive maintenance.

B. Smoke detectors shall be located for ease of periodic testing.

C. Plan the overall system and locate sensors and access panels so that they are not blocked by subsequent construction.

D. Fire alarm panels housed within closets shall be provided with at least 6 inches free space on each side of the panels, including any interfering areas of doorframes, to allow the panels to fully open without removal of the panel door.

E. Locate sensors and access panels to allow inspection and maintenance personnel to service the devices with both hands free. Where easy access by step ladder or scissor lift is not provided, provide access catwalks and platforms. Provide personal fall protection device anchor points at hazardous locations.

F. Wherever steam, chilled pipes, and other items that pose a safety hazard or could be damaged by technicians accessing nearby fire system sensors, provide appropriate access paths, supports, and protective shields. For example, provide a grating over steam pipes on roof where technician must step or lay to service equipment.

G. Provide suitable lighting for safe passage, access, and testing of fire system equipment and sensors. Light levels at the equipment and sensors shall be at least 60 foot candles. Lighting shall be controlled by motion sensors. If motion sensors are not suitable for a given location, then a manual or electronic timed switch shall be provided, which automatically shuts the lights off after 1 hour. Manual shut-off capability shall also be provided.

H. Where Fire Alarm System equipment is not readily visible from normal work areas, permanently install red plastic signs engraved with white lettering in readily visible locations to direct maintenance personnel to the items.

I. Review Section 28 31 00 Fire Detection and Alarm, Equipment Placement, for procedures to be followed by the contractor in properly locating devices so they can be readily inspected and maintained. Repeat those notes as general notes on the Alarm drawings.

END OF SECTION

SECTION 9
TELECOMMUNICATIONS DESIGN STANDARDS

9.1 GENERAL

9.1.1 Correlation and Coordination

A. This section provides standards for the Telecommunications design work. These design standards shall correlate with the current edition of Lockheed Martin Space Systems Company (LMSSC) Facility Engineering Standards (FES), Construction Specifications, Volumes I through IV, and other sections of this Facility Design Standards. Where applicable the Engineering Construction Details delineated in the FES Construction Specifications shall be used for compatibility to LMSSC existing facilities design.

B. The design shall be fully coordinated with other related architectural and engineering disciplines to eliminate conflicts and omissions, and to ensure that the total project requirements are met. Prudent judgment must be exercised in collaborating design solutions with LMSSC organizations and personnel.

C. All design/construction drawings shall follow LMSSC drawing procedures and standards, unless specifically described otherwise in specific Sections of this Facility Design Standards. Refer to Section 11, Drawing Procedures for all drawing requirements.

9.1.2 Design Philosophy

The design shall be done in a manner to assure that the maximum benefit is obtained for the costs expended. Safety, quality, reliability, and maintainability shall not be compromised as a cost saving measure.

Incorporation of energy-saving and pollution-reducing measures, including pursuit of LEED Silver certification, is encouraged and may be required; consult with LMSSC project manager. Refer to specification section 01 81 13 for specific LEED requirements.

The methods of analysis and design shall follow the established principles of professional engineering practice. Value Engineering is encouraged during the development of the design of all systems.

9.1.3 Codes and Standards

Design work shall comply with the current adopted edition of all applicable city, county, state and federal codes and standards. In addition, the current adopted edition of the following codes, standards and publications, are considered as the governing references to this section. Applicable recommendations of related trade and professional associations not listed here shall also be considered. The Telecommunications design work shall be designated under the current Construction Specifications Institute (CSI) format.

Local Municipal Codes
Occupational Safety and Health Administration (OSHA)
National Fire Protection Association Standards (NFPA)
National Electrical Code (NEC)

Commercial Building Telecommunication Wiring Standard (EIA/TIA 568)
Military Handbook 419, Electronic Equipment Grounding Techniques (Unclassified)
NACSIM 5203 Guidelines for Facility Design and Red/Black Installation (Classified)

9.2 DESIGN CONSIDERATIONS

9.2.1 General

A. The purpose of these guidelines is to facilitate the installation of telecommunications cabling system within a facility at the time of construction, and to ease the impact & cost of unpredictable and inevitable moves, additions, and changes (MAC's) in the future. Installation of telecommunications infrastructure systems during construction or renovation is significantly less expensive and disruptive then after a workspace is occupied.

B. Intra-building telecommunication wiring shall be designed and installed in a Physical Star Topology. The purpose of the star topology is to lower the power penalty caused by patch cables connecting equipment and work stations, to reduce the length of cable runs and total cable requirement, and to provide rooms (centers) to concentrate and share expensive communications equipment.

C. Figures 9.1 and 9.2 of this section are schematic drawings of a typical intra-building telecommunication conduit and wiring system depicting the star topology. Appendix G of this Facility Design Standards contains the telecommunication design and installation services supported by Information Services.

D. Building telecommunication equipment shall be located in six distinct areas within a building:

1. A Main Integrated Wiring Center (IWC)
2. One or more Satellite IWC's
3. Telephone Closets
4. Access Control & Alarm System (ACAS) Rooms
5. Emergency Notification System (ENS) Rooms
6. User work station Areas

9.2.2 Main IWC

The Main IWC serves as the primary telecommunications distribution center in a building. This room contains connections to the outside world, and to other IWCs, and telephone closets. Local Exchange Carrier (LEC) as well as, LM owned inter-building optical fiber and copper cables shall be terminated in this room. This room shall contain LEC and LM managed equipment to receive, process, and redistribute voice & data communications to other parts of the building. The main IWC may also contain cabling and equipment to distribute voice and/or data communications to local user work station spaces.

Include Emergency Power.

9.2.3 Satellite IWCs

Satellite IWC's distribute voice & data communications to the user workstation areas. A building may have several Satellite IWC's connected to the Main IWC. Satellite IWC locations must be carefully selected in order to maximize the area they service and to minimize the length of IWC to user workstation cables, which shall not exceed 295 feet (90 meters). Satellite IWC's contain cable punch down blocks as well as, voice & data communications equipment and patch panels.

9.2.4 Telephone Closets

Telephone closets, containing only voice communications wiring and LEC hand-off or Key System equipment, exist in many LM buildings. However, the telephone closet is an obsolete concept and no new ones shall be constructed. Additionally, whenever possible, telephone closets shall be eliminated and their functionality consolidated into new or existing IWC's as part of remodeling or modernization projects.

9.2.5 ACAS Rooms

Security alarm and intrusion equipment, if necessary, will be installed in an ACAS room. The design of this room is controlled by the ACAS Design Group of LMSSC Facility Engineering organization. (Refer to Section 17, Security Systems Design Standards.

9.2.6 ENS Rooms *Steve Freditas*

The Emergency Notification System (ENS) room contains public address (PA) and overhead paging equipment. This room shall be located near the main entrance to the building. Refer to Section 5, Electrical Design Standards, for specific requirements.

9.2.7 User Work Station Areas

The user work station area is connected directly to an IWC using one or more horizontal wiring cables. This cable set is designed to support all voice and data communication requirements at the user work station.

9.3 BUILDING CONDUIT

9.3.1 Building Entrance Conduit

A. All types of cable (i.e., optical fiber, coaxial, copper twisted pair) enter the building through the service entrance conduit, whether the cable is owned by LMSSC or provided by the local exchange carrier (LEC). This conduit provides mechanical protection for the cables and can minimize subsequent trenching costs into the building for future cable additions.

B. Cable conduits for LMSSC Plant 1 shall enter the building from a LMSSC provided Class A manhole, located on LMSSC property. This manhole is of a precast concrete design and is a minimum of 10 feet long x 6 feet wide x 7 feet headroom.

C. General requirements for building entrance conduits are:

1. Recommended size of each conduit is 4 inches inside diameter.

2. Corrosion resistant material (PVC) is recommended. Metallic conduit shall be reamed and bushed.

3. Metallic sleeves through foundation walls shall be long enough to reach undisturbed ground to carry shear forces.

4. Conduits shall not include more than two 90 degree bends.

5. Minimum depth of 24 inches or as directed by local code.

6. Underground conduit path shall be capped with a 2 inch layer of red-colored concrete for subsequent identification.

7. Separation from power conduit by not less than 3 inches of concrete, or 12 inches of well tamped dirt, or as local code directs.

8. Each duct shall be proved with a 3 inch mandrel.

9. Ducts must be true-taped and the length recorded. A nylon pull rope shall be left in each duct.

10. All entrance ducts shall be sealed with a duct plug to prevent water from entering the building.

11. The number of building entrance conduits shall be:

Usable Floor Space	No. of Ducts
50 - 550,000 Sq. Ft.	6
551 - 900,000 Sq. Ft.	8

9.3.2 Intra-building Conduit

A. Intra-building conduits interconnect Main IWC's, Satellite IWC's, legacy telephone closets, and the ACAS and ENS rooms. These conduits provide mechanical protection and also provide a pathway for the future installation of additional cables and wires.

B. All intra-building conduit should be rigid Electrical Metallic Tubing (EMT), adequately supported and properly reamed at both ends. Conduit sections shall be terminated with plastic bushings, joined with appropriate compression fittings, and securely anchored at cable pull boxes to support cable installation activity.

C. General requirements for intra-building conduits:

1. Recommended size of each conduit is 4 inches inside diameter.

2. Conduits shall be installed in the shortest straight runs, and parallel or perpendicular to building column lines when possible.

3. No section of any conduit run shall contain more than two 90 degree bends. A double offset is equivalent to one 90 degree bend.

4. The minimum bend radius shall be no less than 10 times the internal diameter of the conduit.

5. All conduits shall be left clean, dry, and free of debris.

6. All conduits shall be true taped, and left with a nylon pull rope or pull string.

7. Conduits shall not be placed over or adjacent to boilers, incinerators, water or steam lines, or through flammable material storage areas.

8. Riser conduits, slots and sleeves shall have a 2 inch high lip to prevent spilled liquids from flowing between floors. All riser conduits, slots and sleeves shall be capped with a suitable fire stop after the telecommunication cables have been installed.

9. Conduits shall be labeled at 10 foot intervals "Telephone Conduit...Call LMSSC Before Cutting or Moving".

9.3.3 Cable Splice Boxes

A. Cable splice boxes are installed for three purposes:

1. To limit the number of conduit bends to two
2. To limit the length of a conduit section
3. For splicing two or more cables

B. The general requirements for splice boxes are:

1. Splice boxes shall be installed in easily accessible locations. When boxes are installed above dropped ceilings, the ceiling tile shall be suitably marked to indicate access to the box.

2. The box must be placed in a straight section of conduit and should not be used in lieu of a bend.

3. The minimum dimensions of splice boxes shall be 66 inches long by 42 inches wide by 11 inches deep. If the box is used in lieu of a 90 degree bend, the depth shall be increased to 24 inches.

9.3.4 Cable Junction Boxes

A. Cable junction boxes (J-Boxes) are installed for two purposes:

1. To limit the number of conduit bends to two
2. To limit the length of a conduit section

B. The general requirements for J-Boxes are:

1. J-Boxes shall be installed in easily accessible locations. When boxes are installed above dropped ceilings, the ceiling tile shall be suitably marked to indicate access to the box.

2. A J-box must be placed in a straight section of conduit and should not be used in lieu of a bend.

3. The minimum dimensions for a J-Box shall be 12 inches long by 12 inches wide by 4 inches deep.

9.4 MAIN INTEGRATED WIRING CENTER (IWC)

A. The Main IWC serves as the primary telecommunications distribution point within a building. This room will contain free-standing equipment cabinets and relay racks as well as, wall mounted hardware. Interconnect hardware, patch panels, and communications equipment in the main IWC are the terminating points for inter-building cables, circuits and intra-building distribution cables.

B. Every building shall have a Main IWC. Building entrance conduit and intra-building conduits to Satellite IWCs, ACAS and ENS rooms, and legacy telephone closets shall terminate in the Main IWC. Figure 9.3 is a typical Main IWC room layout.

9.4.1 Requirements

A. The Main IWC shall be:

1. Located in a secure, dry, dust free, climate controlled, hard wall space, easily accessible to telecommunications support personnel at all times (i.e. 24 x 7 x 365).

2. Provided with a vinyl tile or sealed concrete floor to minimize dust. Anti-static material is preferred. No false ceiling should be installed.

3. Equipped with a solid core door fitted with an always-locked lockset and controlled by an ACAS card reader. The door should be designed at the corner of a short wall to provide the maximum wall space.

4. Provided with ¾ inch by 8 foot high A-C fire-rated plywood backboard over the drywall on all walls, Plywood shall be painted with white paint (2 coats minimum, or per manufacturer's. directions), with fire rating seals left unpainted.

5. Provided with a minimum 36 inch clear work space in front of all cable terminals and a minimum 36 inch clear work space in the front and rear of equipment cabinets and relay racks.

6. Free of any electric power equipment, transformers, circuit breakers, electric power feeder cables, etc., due to potential RF interference. Electrical equipment located in any adjacent spaces shall not be located nearer than 6 feet to common walls.

7. Equipped with overhead cable ladder rack installed at eight feet above the finished floor (no cable trays) to facilitate routing of cables between equipment cabinets, relay racks, conduit entrance points, and wall mounted hardware.

8. Seismically safe, with appropriate bracing installed on all freestanding equipment cabinets and relay racks.

9.4.2 Space

As a general guideline, the minimum space required for a Main IWC is 10 feet wide x 20 feet long x 10 feet headroom.

Determining the specific space requirements, which will involve telecommunications design assistance, must take into consideration the number of equipment cabinets, relay racks, and wall mounted hardware, plus allowances for the proper clearances, door swing and equipment access needs associated with each one. Room for future growth shall also be considered to ease the impact & cost of unpredictable and inevitable moves, additions, and changes (MAC's) and because telecommunications technology evolves more rapidly than other facility infrastructure systems.

Refer to Figure 9.3 of this section.

9.4.3 Power

A. The Main IWC requires a minimum of six dedicated 20 amp 120 VAC circuits and two 30 amp 250 VAC circuits. Additional circuits may be required to support specific user requirements.

B. All circuits shall preferably be connected to an Uninterruptible Power Supply (UPS). At a minimum, all circuits shall be connected to an emergency generator.

C. 120 VAC power shall be supplied through NEMA 5-20R duplex receptacles. NEMA L6-30R receptacles shall be used for 250 VAC 30 amp requirements. Recommended placement of the outlets is:

1. Two NEMA 5-20R duplex receptacles and two NEMA L6-30R receptacles shall be mounted on the outside of the cable ladder above an equipment cabinet location.

2. One 20 amp circuit terminating in a duplex outlet mounted 12 inches above the finished floor at the middle wall supporting inter-building cable terminations.

3. Two 20 amp circuits, each circuit terminating in a duplex outlet mounted 12 inches above the finished floor at the middle of the wall supporting intra-building cable terminations.

4. One 20 amp circuit terminating in a quad outlet mounted 8 feet above the finished floor near the middle of one wall supporting intra-building cable terminations.

9.4.4 Grounding

A. Building ground shall be provided as a bond to building steel, or to the external ground plane/grid. Conduit is not acceptable as a ground. This ground shall not be isolated from other grounds within the building to prevent the development of isolated ground loops.

B. Building ground shall be extended by a #6 insulated solid copper wire to a copper ground strip/bar installed at 8 feet above the finished floor and next to the cable ladder in the Main IWC. The copper ground strip/bar shall be a minimum 1-1/2 inch x 6 inch x 1/4 inch thick with a minimum of 8 threaded screw lugs.

9.4.5 Environmental

A temperature range of 20 to 27 degrees Celsius (68 to 80 degrees Fahrenheit) and a humidity range between 10% and 85% shall be maintained 24 hours per day.

9.4.6 Lighting

Adequate lighting will be provided for work operations to be carried out in a safe and healthful manner. Two lighting fixtures shall be located parallel to and two feet away from the overhead cable ladder to provide lighting to the front of equipment cabinets and relay racks. Two additional lighting fixtures shall be located parallel to and two feet away from the overhead cable ladder to providing lighting to the rear of equipment cabinets and relay racks. The lighting objective is 30 FC measured at 3 feet above the floor. At least one lighting fixture shall be connected to the building emergency lighting system.

9.5 Satellite IWC

A. A Satellite IWC (SIWC) serves to distribute intrabuilding telecommunication cables out to the work station locations. Satellite IWC rooms are designed to support data communication equipment (i.e., controllers, CNU equipment, etc.), and key telephone equipment for planned desk and board areas.

B. A Satellite IWC will contain both freestanding racks and wall mounted equipment. The physical distance from the Satellite IWC room to the most distant user work area shall be a nominal 180 feet, not to exceed 200 feet. This will ensure that no cable run will exceed 300 feet.

9.5.1 Requirements

A. The Satellite IWC shall be:

1. Located in a secure dry, dust free, climate controlled, hard wall space easily accessible to telecommunications support personnel at all times. (i.e. 24 x 7 x 365)

2. Provided with a vinyl tile or sealed concrete floor to minimize dust. Anti-static material is preferred. No false ceiling should be installed. No carpet.

3. Equipped with a solid core door fitted with an always-locked lockset and controlled by an ACAS card reader. The door should be designed at the corner of a short wall to provide maximum wall space.

4. Provided with ¾ inch by 8 foot high A-C fire-rated plywood backboard over the drywall on all walls, plywood shall be painted with white paint (2 coats minimum, or per manufacturer's directions), with fire rating seals unpainted.

5. Provided with a minimum 36 inch clear work space in front of all cable terminals and a minimum 36 inch clear work space in the front and rear of equipment cabinets and relay racks.

6. Free of any electric power equipment, transformers, circuit breakers, electric power feeder cables, etc., due to potential RF interference. Electrical equipment located in any adjacent spaces shall not be located nearer than 6 feet to common walls.

7. Equipped with overhead cable ladder racks installed at eight feet above the finished floor (no cable trays) to facilitate routing of cables between equipment cabinets, relay racks, conduit entrance points, and wall mounted hardware.

8. Adequate grid cable paths and supporting methods (i.e., cable trays, conduits, J-hooks) shall be installed from the Satellite IWC to the work station locations.

9. Seismically safe, with appropriate bracing installed on all freestanding equipment cabinets and relay racks.

9.5.2 Space

The minimum space required for a Satellite IWC room is 15 feet long x 10 feet wide x 10 feet high. Telephone closets should not be substituted for an Satellite IWC to try to save building space. Contact LMSSC, for assistance with specific situations.

9.5.3 Power

A. Satellite IWCs require a minimum of 4 dedicated 20 amp 120 VAC circuits. Additional circuits may be required to support specific user requirements.

B. All circuits shall preferably be connected to an Uninterruptible Power Supply (UPS). At a minimum, all circuits shall be connected to emergency power.

C. Electric power shall be supplied through NEMA 5-20R duplex receptacles. NEMA L6-30R receptacles shall be used for 250 VAC 30 amp requirements. Recommended placement of the outlets is:

1. Two NEMA 5-20R duplex receptacles and two NEMA L6-30R receptacles shall be mounted on the outside of the cable ladder above an equipment cabinet location.

2. One 20 amp circuit terminated in a quad outlet mounted at 8 feet above the finished floor on the wall supporting voice telephone equipment.

3. One 20 amp circuit terminated in a duplex outlet mounted at 12 inches above the finished floor at the middle of the wall adjacent to equipment racks.

9.5.4 Grounding

Building ground shall be extended from the Main IWC by a #6 insulated solid copper wire placed in a separate 3/4 inch conduit. The ground wire shall be terminated on a solid copper ground strip/bus a minimum 1-1/2 inch x 6 inch x 1/4 inch thick with threaded screw lugs to attached equipment ground wires. The ground strip/bus shall be installed at 8 feet above the finished floor and next to the cable ladder rack. This design shall provide a ground of less than 5 ohms referenced to the building ground in the Main IWC.

9.5.5 Environmental

A temperature range of 20 to 30 degrees Celsius and less than 85% humidity shall be maintained 24 hours a day.

9.5.6 Lighting

Adequate lighting shall be provided for work operations to be carried out in a safe and healthful manner. The lighting objective is 30 FC measured at 3 feet above the floor.

9.7 USER WORK STATION AREAS

A. Implementation of an IWC design results in a single set of cabling routed from an IWC room to a user work station. This cable set is designed to support all user voice and data communication requirements. The IWC concept requires minimum floor space at the user work area since equipment can be shared from an IWC room.

B. Cable connections from the user work area to the IWC shall be via plenum rated cable runs installed in cable trays, raceways, or J-hooks. These cable runs should be planned to offer the most direct path to the work area. The cable path should be parallel to building column lines rather than diagonal.

9.7.1 Work Station

Cables shall be terminated on a faceplate mounted in a standard duplex wiring box mounted a minimum 6 inches above the finished floor at the work station location. These outlets should be a maximum 60 inches from the electric power outlet at the work station.

9.7.2 Raised Flooring

A. Cables from IWCs or telephone closets shall be layered and neatly bundled under raised floors without the use of cable trays. Cables shall be terminated at the work station area within a standard LMSSC electrical service box (Liskey box) mounted in the raised flooring.

B. The electric service box shall be:

1. Formed from 16 gauge galvanized sheet metal with a die cast spring-loaded aluminum lid and frame.

2. All edges and holes shall be beveled and smooth to protect cables.

3. Contain 2 standard knockouts for 1 inch conduits.

4. Contain two 1-1/2 inch grommeted holes on opposite sides of the box body for amphenol connectors, fiber optics, etc., to pass through the box to the work station.

9.7.3 Dropped Ceilings

Telecommunication cables and wires shall not be placed directly on top of dropped ceiling T-bar. Cable supports such as cable trays or J-hooks should be installed to adequately support telecommunication cables and wires. J-hooks shall be placed at a maximum of 3 foot intervals.

9.7.4 Hard Capped Ceilings

Hatches shall be provided at a maximum 28 foot spacing for access to telecommunication cables and wires above hardcap ceilings. Adequate lighting and catwalks shall be provided to permit safe and healthful work above the hardcap.

9.7.5 Utility Poles

A. Utility poles shall be placed to route telecommunication cables and wires from above ceiling cable runs to Haworth panels and raceways. One cable utility pole can serve a maximum of 8 work station modules. When conduit is extended from the IWC room, a 12 inch by 12 inch by 4 inch deep J-box shall be installed at the utility pole top.

B. Utility pole locations shall be reviewed by LMSSC Telecommunication Services organization. Table 9-1 below lists maximum capacities for different utility poles:

Table 9-1

Type	4 Pr. Wire/Duplex Fiber Optic	25 Pr. Cable
Universal	35 cables	20 cables
Haworth Top Feed	10 cables	2 cables

9.8 TELECOMMUNICATION BACKBONE WIRING

A. The function of the backbone wiring is to physically connect Main IWCs, Satellite IWCs, telephone closets, and Intra-building terminals. The backbone wiring includes copper and fiber optic cables, connecting blocks, and patch panels.

B. Backbone wiring shall be installed based on the size of the serving area and the ultimate planned use. The backbone copper wiring should be sized at a minimum 15 pairs per 1000 square feet of building space served from the terminal. Fiber optic cable is recommended between Main IWCs and Satellite IWCs to connect data communication systems with a minimum power loss.

9.8.1 Backbone Wiring Topology

A. The backbone wiring shall be installed in a conventional hierarchical star topology as illustrated in Figure 9.2. Each telephone closet shall be wired to a Main IWC. A telephone closet should not be directly wired to another telephone closet or to a Satellite IWC. A Satellite IWC should be directly wired to a Main IWC, not to another Satellite IWC. This wiring arrangement limits number of hierarchical levels and the number of cross connect locations to three to reduce the power loss caused by patch panels, patch cables, and cross connect terminals.

B. Telecommunication systems which are designed for bus or ring configurations can often be accommodated with a star topology with appropriate connections and data communications equipment.

9.8.2 Backbone Cable Specifications

A. This standard specifies multi-pair copper and fiber optic cables for building backbone cabling.

B. The multipair copper cable is the primary cable media installed in the building backbone network. This cable shall consist of 24 AWG solid copper, thermoplastic insulated, twisted conductor pairs formed into binder groups of 25 pairs each. The groups shall be identified by distinctly colored binders and assembled to form a single compact core. The core shall be surrounded by an electrically continuous shield of overlapped corrugated aluminum and covered with a uniform, continuous thermoplastic sheath rated as Type CMR per NEC Article 800.

C. Each conductor insulation shall be distinctly colored. The color code shall conform to industry standard color code composed of ten distinctive colors to identify 25 pairs in a binder group. Binder groups shall be identified by color-coded binders.

D. The conductor pairs shall be twisted to reduce crosstalk potential, and the twists of any pair shall not be exactly the same length as any other pair within a 25-pair group.

E. The conductors shall meet Level 3 electrical specifications as described in Table 9-2 below:

Table 9-2

DC Resistance	Less than 28.6 ohms per 1000 ft.
DC Balance	Less than 5% between any conductor pair
Mutual Cap	Less than 20 pF per foot at 1000 Hz
NEXT	Worst case 25 dB per 1000 ft at 10 MHz
Attenuation	Max 7.8 dB per 1000 ft. at 1 MHz

Max 17 dB per 1000 ft. at 4 MHz
Max 30 dB per 1000 ft. at 10 MHz
Max 40 dB per 1000 ft. at 16 MHz

F. Multipair copper cables shall be terminated on 66-type split-V, insulation displacing connecting blocks mounted on stand-out brackets attached to colored backboards in the IWC rooms and telephone closets. All backbone cables shall be terminated on blue-colored backboards. These cables may be extended to wiring patch panels within the room, and connected to equipment or other cables using patch cables.

G. Fiber optic cable is recommended to connect IWC rooms. These fiber optic cables may be used to connect or extend Local Area Networks (LANs) throughout the building, and offer almost unlimited bandwidth for future high speed data applications. A minimum of 12 fiber strands should be installed between IWC rooms.

H. Fiber optic cable shall be tight-buffered multimode, graded-index 62.5/125 um core/cladding glass strands covered with a color-coded thermoplastic insulation. The sheath shall be a uniform, continuous thermoplastic covering rated as OFNP per NEC Article 800, with no metal strength member.

I. The fiber strands shall meet performance specifications described in Table 9-3 below:

Table 9-3	
Attenuation 1.5 dB/km @ 1300 nm	3.75 dB/km @ 850 nm
Min Bandwidth 500 MHz-km @ 1300 nm	160 MHz-km @ 850 nm

J. Fiber optic strands shall be terminated with ceramic ST-type bayonet connectors plugged into a multiport fiber optic patch panel equipped with ST-type couplers. The fiber connectors shall be installed with epoxy, crimp-on connectors are not allowed. Wire organizers shall be installed with the patch panels for neatly routing of patch cables. At least one organizer panel shall be installed for every three patch panels.

K. The maximum loss per installed fiber connector as measured with a power meter shall be:

1.2 dB in each direction
1.0 dB max variation, each direction
1.0 dB max variation among fiber pairs

9.9 TELECOMMUNICATION HORIZONTAL WIRING

A. The function of the horizontal wiring is to physically connect user work areas with voice and data equipment located in closets and IWCs. The horizontal wiring includes the outlet at the user work area, horizontal distribution cables, the physical termination of these cables, and cross-connections to equipment and backbone cables in the IWCs or closets. Horizontal distribution cables shall always have a plenum-rated sheath as described by NEC Article 800.

B. The horizontal wiring contains the largest quantity of individual cables for the building, and is typically much less accessible than the backbone wiring for future rearrangement or reinforcement without causing inconvenience and work disruption to

the users. These factors make the selection of cable types and quantities very important to the design of the building wiring.

C. The horizontal cable runs shall avoid passing near electrical equipment that generate high levels of EMI. Routes near electric motors, transformers and switch gear shall be avoided.

9.9.1 Horizontal Wiring Topology

The horizontal wiring shall be installed in a star topology centered on a telephone closet, Satellite IWC, or Main IWC. The maximum wire length shall be less than 328 linear feet to meet 10BaseT standards.

9.9.2 Horizontal Cable Specifications

A. This standard specifies unshielded multi-conductor copper cable for building horizontal wiring. Other media such as fiber optics, Shielded twisted pair copper (STP) cable, may be installed at a user's specific request.

B. The multi-pair copper cable shall be unshielded 24 AWG solid copper, twisted pair (UTP) cable with a plenum-rated (CMP) sheath as described in NEC Article 800. The standard cable consists of four (4) color coded pairs of conductors for all voice and data applications. At minimum, two 4-pair UTP cables shall be installed to each user work area. A separate 25-pair cable may be installed for specific 1A2 telephone applications.

C. The cable conductors shall meet Level 4 electrical specifications as described in Table 9-4 below:

Table 9-4

DC Resistance	Less than 28.6 ohms per 1000 ft.
DC Balance	Less than 5% between any conductor pair
Impedance	Less than 100 ohms at 1 MHz
Mutual Cap	Less than 14 pF/ft.
NEXT	Worst case 25 dB per 1000 ft. at 10 MHz
Attenuation	Max 6 dB per 1000 ft. at 1 MHz
Max 12 dB per 1000 ft. at 4 MHz	
Max 20 dB per 1000 ft. at 10 MHz	
Max 25 dB per 1000 ft. at 16 MHz	

D. Each four-pair cable shall be terminated at the work station area with an eight position modular jack in a telecommunication outlet box securely mounted at the user work area. The outlet box shall be sized to accommodate the two four-pair distribution cables, plus planned fiber and RG-58 coax cables. Pin and pair assignments are shown in Figure 9-5, and conform to 10BaseT standards.

Table 9-5

Pair 1 Blue	White-Blue	Pin 5 Pin 4
Pair 2 Orange	White-Orange	Pin 3 Pin 6
Pair 3 Green	White-Green	Pin 2 Pin 7
Pair 4 Brown	White-Brown	Pin 8 Pin 1

9.10 ACCESS CONTROL AND ALARM SYSTEM (ACAS) ROOM

The ACAS room shall be connected to the Main IWC with a 2 inch conduit. ACAS room design requirements are identified in Section 17, Security Systems Design Standards.

9.11 EMERGENCY NOTIFICATION SYSTEMS (ENS) ROOM

The ENS room shall be connected to the Main IWC with 1 inch conduit. ENS room design requirements are identified in Section 17, Security Systems Design Standards.

9.12 TELECOMMUNICATIONS SECURITY

A. The objective of communication wiring security is to prevent signals (voice or data) that are meant to be classified and encrypted from exiting the secure envelope or building, in a clear non-encrypted form.

B. The responsible organization for determining security requirements for telecommunications design is LMSSC Technical Security organization. For specific secure telecommunications design standards, refer to Section 6, Security Design Standards.

END OF SECTION

FIGURE 9.1

INTRABUILDING TELECOMMUNICATION CONDUIT SYSTEM

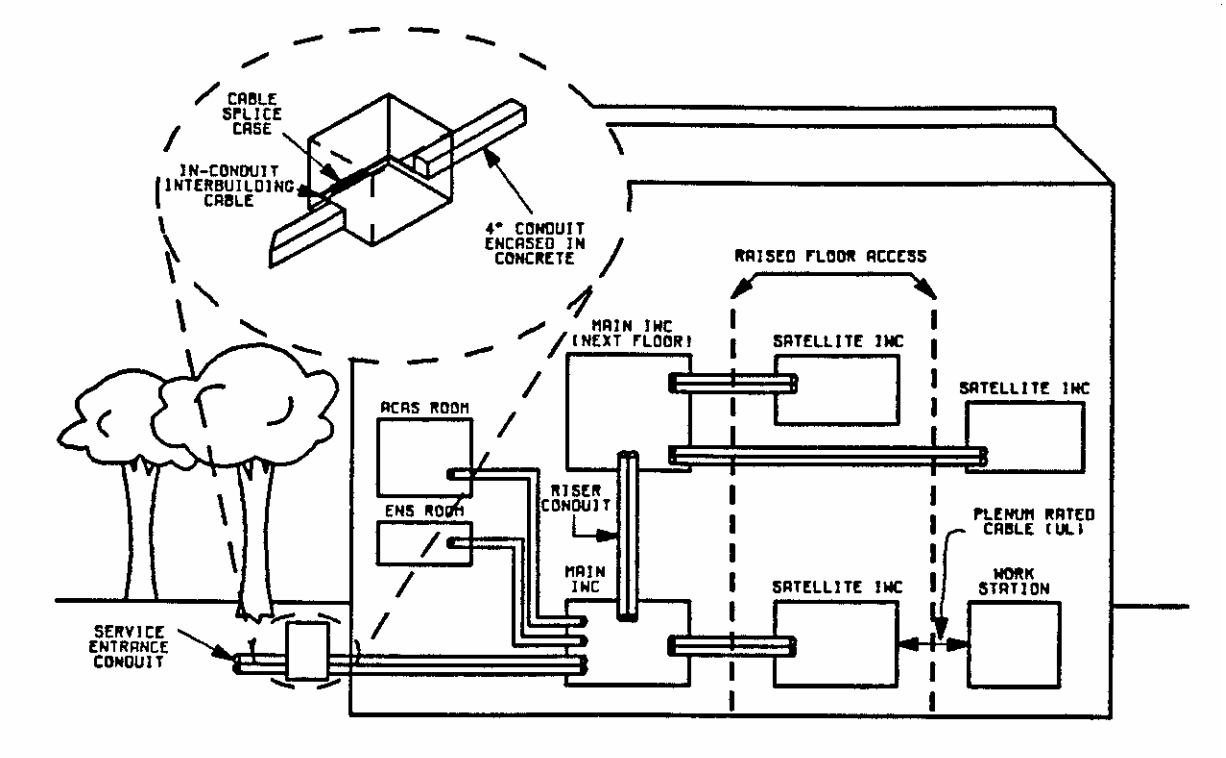

FIGURE 9.2

INTRABUILDING TELECOMMUNICATION WIRING STRUCTURE

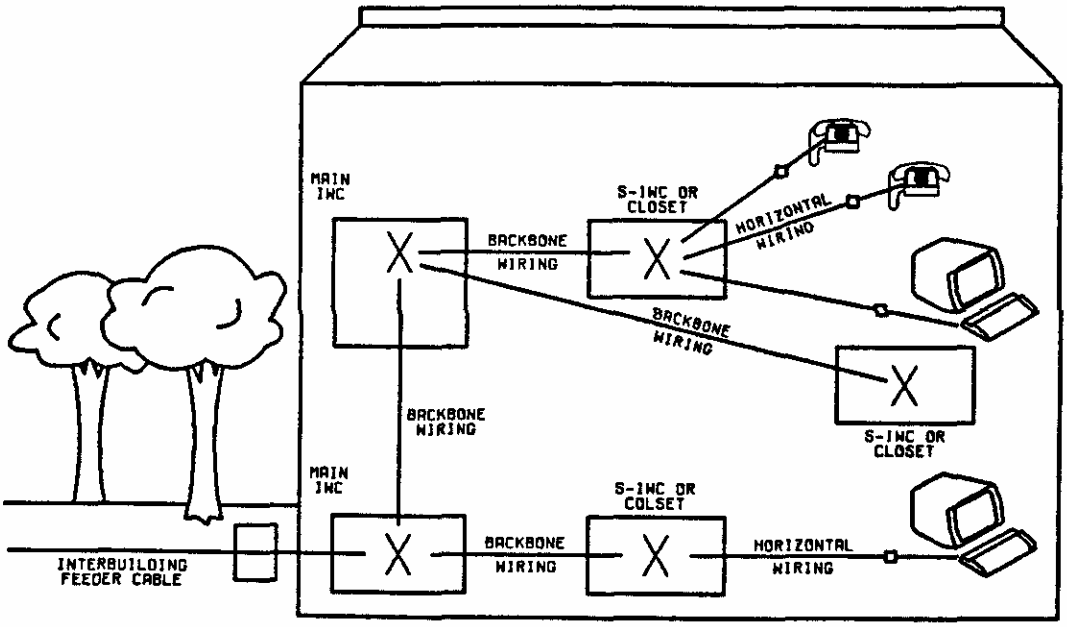

FIGURE 9.3

MAIN IWC ROOM LAYOUT

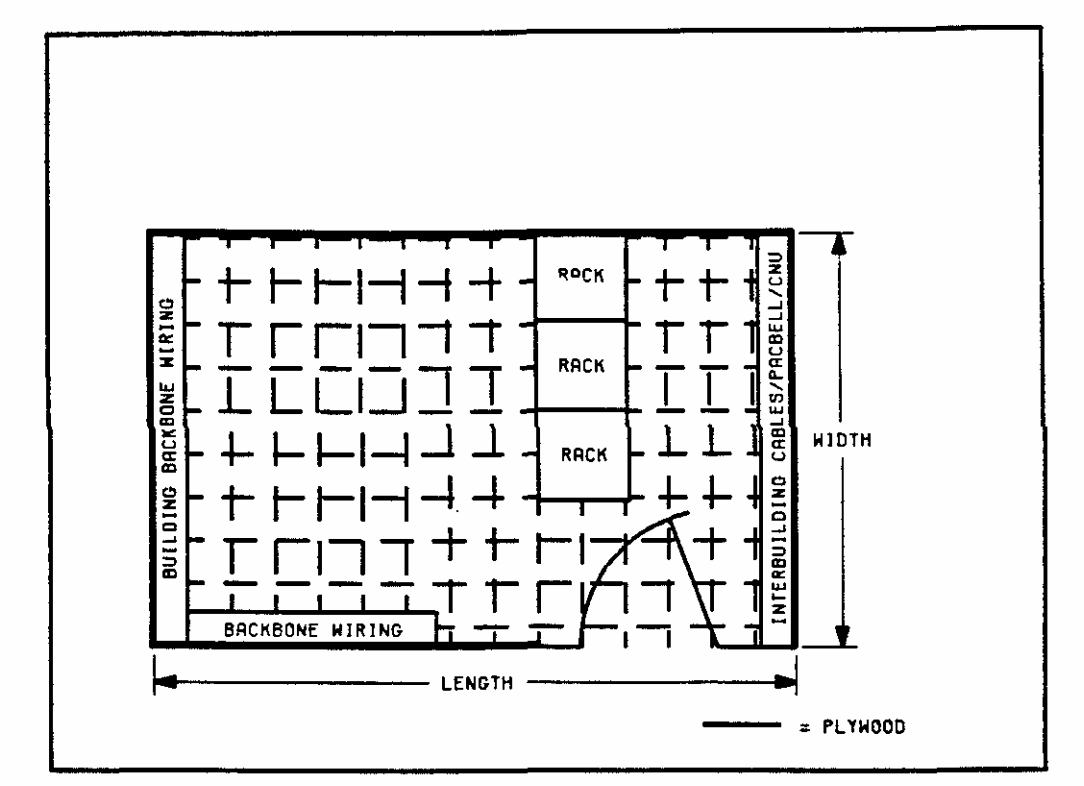

All building entrance conduit shall terminate on the wall reserved for interbuilding cables.

Intrabuilding conduits shall terminate on wall reserved for backbone cables.

FIGURE 9.4

TELEPHONE CLOSET LAYOUT

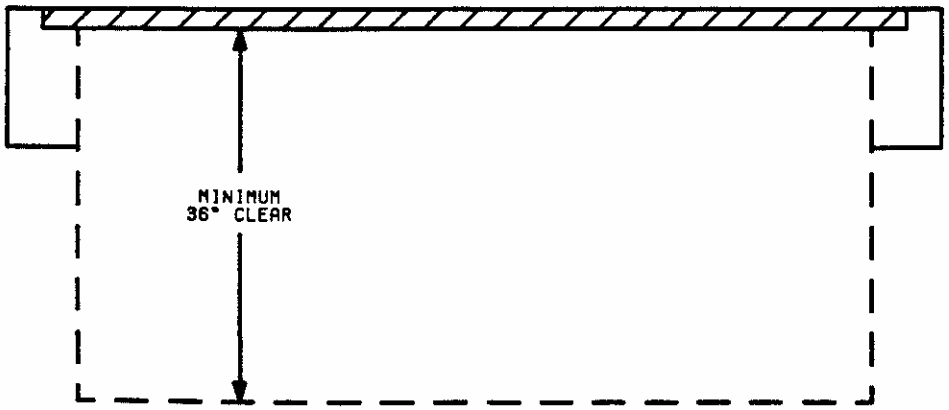

STANDARD TELEPHONE CABLE COLOR CODE

Pair	Color	TelCo Pin	RJ-45 Pin
1	White/Blue	26	5
	Blue/White	1	4
2	White/Orange	27	2
	Orange/White	2	5
3	Whit/Green	28	2
	Green/Whit	3	7
4	Whit/Brown	29	8
	Brown/Whit	4	
5	White/Slate	30	
	Slate/White	5	
6	Red/Blue	31	
	Blue/Red	6	
7	Red/Orange	32	
	Orange/Red	7	
8	Red/Green	33	
	Green/Red	8	
9	Red/Brown	34	
	Brown/Red	9	
10	Red/Slate	35	
	Slate/Red	10	
11	Black/Blue	36	
	Blue/Black	11	
12	Black/Orange	37	
	Orange/Black	12	
13	Black/Green	38	
	Green/Black	13	
14	Black/Brown	39	
	Brown/Black	14	
15	Black/Slate	40	
	Slate/Black	15	

STANDARD TELEPHONE CABLE COLOR CODE (continued)

Pair	Color	TelCo Pin	RJ-45 Pin
16	Yellow/Blue	41	
	Blue/Yellow	16	
17	Yellow/Orange	42	
	Orange/Yellow	17	
18	Yellow/Green	43	
	Green/Yellow	18	
19	Yellow/Brown	44	
	Brown/Yellow	19	
20	Yellow/Slate	45	
	Slate/Yellow	20	
21	Violet/Blue	46	
	Blue/Violet	21	
22	Violet/Orange	47	
	Orange/Violet	22	
23	Violet/Green	48	
	Green/Violet	23	
24	Violet/Brown	49	
	Brown/Violet	24	
25	Violet/Slate	50	
	Slate/Violet	25	

SECTION 10
TEMPEST DESIGN STANDARDS

10.1 GENERAL

10.1.1 Correlation and Coordination

A. This section provides standards for the design of all facilities or areas that require electromagnetic containment of RF signals originating in electronic processing equipment (referred to as Tempest). These design standards shall correlate with the current edition of Lockheed Martin Space Systems Co. (LMSSC) Facility Engineering Standards (FES), Construction Specifications, Volumes I through IV, and other relevant sections of this Facility Design Standards. Where applicable, the Engineering Construction Details delineated in the FES Construction Specifications shall be used for compatibility to LMSSC existing facilities design.

B. LMSSC Technical Security organization shall determine when these requirements apply. All standards should be followed as a system. Application of a limited subset of these standards shall not be undertaken without the specific approval by Technical Security group of LMSSC Physical Security organization.

C. The Tempest design work shall be designated under the current Construction Specifications Institute (CSI) format.

D. The design shall be fully coordinated with other related architectural and engineering disciplines to eliminate conflicts and omissions, and to ensure that the total project requirements are met. Prudent judgment must be exercised in collaborating design solutions with LMSSC organizations and personnel.

E. All design/construction drawings shall follow LMSSC drawing procedures and standards, unless specifically described otherwise in specific Sections of this Facility Design Standards. Refer to Section 11, Drawing Procedures for all drawing requirements.

10.1.2 Design Philosophy

The design shall be done in a manner to assure that the maximum benefit is obtained for the costs expended. Safety, quality, reliability,, and maintainability shall not be compromised as a cost saving measure.

Incorporation of energy-saving and pollution-reducing measures, including pursuit of LEED Silver certification, is encouraged and may be required; consult with LMSSC project manager. Refer to specification section 01 81 13 for specific LEED requirements.

The methods of analysis and design shall follow the established principles of professional engineering practice. The effective containment of electromagnetic energy can only be achieved when the components of a shielded facility work as a system. Therefore all standards delineated herein should be followed as a system. Value Engineering is encouraged during the development of the design of all systems.

10.1.3 Codes and Standards

Design work shall comply with the current adopted edition of all applicable city, county, state and federal codes and standards. In addition, the current adopted edition of the following

codes, standards and publications are considered as the governing references to this section. Applicable recommendations of related trade and professional associations not listed here shall also be considered.

NACSEM 5204, Shielded Enclosures
National Security Agency Specification 73-2A, Foil RF Shielded Enclosure
Military Standards MIL-HDK-419A, Grounding, Bonding, and Shielding for Electronic Equipment and Facilities
Military Standards MIL-STD-188,-124A, Grounding, Bonding and Shielding for Common Long Haul/Tactical Communications Systems including Ground Based Communications-Electronics Facilities and Equipments
Underwriters Laboratories (UL)-1283, Electromagnetic Inference Filters
American Society for Testing Materials (ASTM) E90, Recommended Practice for Laboratory Measurement of Airborne Sound Transmission Loss of Building Partitions
ASTM E-84, Test for Surface Burning Characteristics of Building Materials
National Fire Protection Association (NFPA)
Federal Specifications SS-A-118B, Flame Resistance Test
Underwriters Laboratories (UL)
California Building Code (CBC)
Local Codes

10.1.4 General Criteria

A. LEED Requirements (if pursued, consult with architect/ LMSSC project manager):

1. Products to be of recycled (Credit MR4) and/or local (Credit MR5) materials.
2. Products to be reused (Credit MR3) where feasible.

10.1.5 Definitions and Acronyms

Item	Description
NSA 65-6	National Security Agency specification for RF shielded enclosures, normally considered a 100 db enclosure. Contains attenuation, design criteria and measurement requirements. Included in NACSEM 5204.
NSA 73-2A	National Security Agency specification for Foil RF shielded enclosures, normally considered a 50 db enclosure. Contains attenuation, design criteria and measurement requirements. Included in NACSEM 5204.
RF	Radio Frequency, a part of the electromagnetic spectrum.
EMT Conduit	Electrical Metallic Tubing made of ferrous material used in routing and/or shielding wiring.
Red/Black	Red: Any electrical and electronic circuit, component, equipment, system, etc., which handles classified plain text in electrical signal form. Black: Any electrical and electronic circuit, component, equipment, system, etc., which handles encrypted or unclassified information in electrical signal form.
Shielding	The reduction of radio frequency energy passing through a wall, floor, or ceiling normally through the use of metallic material.
Ferrous	Metal with a high Iron content.

Zone Test — An RF test that determines the attenuation characteristics of a facility or an area within a facility.

Tempest — An unclassified term referring to the study and investigations of compromising emanations.

10.1.6 Purpose

A. This section is intended to define the guidelines for the design of RF shielding systems for use in LMSSC facilities. This section covers both high performance RF shielded enclosures and limited performance shielding.

B. The function of RF construction is to permit an interference-free environment with a single point signal ground and/or to retain RF signals inside of the shielded environment.

10.2 HIGH PERFORMANCE WELDED STEEL RF ENCLOSURES

Welded steel RF enclosures shall be designed, completely independent of the building structure including lateral loads imposed by seismic Zone 4 loads unless otherwise stated in the project requirements documents.

10.3 HIGH PERFORMANCE MODULAR RF ENCLOSURES

A. Modular RF enclosures shall be designed to be supported by a structural system independent of the building structure. It will support all vertical loads including all finishes, lights, diffusers, piping and ducting unless otherwise stated in the project requirements documents. Lateral loads imposed by seismic forces may be transferred to new or existing shear walls within the building or to the shield's supporting structure. Live loads shall be considered as directed by LMSSC.

B. The walls, floor and ceiling shall be constructed of rigid structural laminated panels faced with heat treated annealed steel.

C. The panel interlocking system is to be constructed of corrosion resistant zinc coated steel sections formed to provide continuous metal to metal contact with the RF panels.

D. Walls are to be designed to be self-supporting with a maximum deflection of 1/250 of unsupported span under a static load of 75 lbs. applied normal to the wall surface.

E. The entire RF enclosure is to be dielectrically isolated from the building, supporting structure, and ground. The rod hangers to support the top of the RF enclosure are to be isolated through the use of dielectric, adjustable connectors. The bottom of the tank is to be isolated from the building slab by a 1/8 inch polypropylene welded dielectric membrane and 1/2 inch cement board, or LMSSC approved equal method. All penetrations, metal conduits, metal piping, and metal ducts are to be isolated from the RF enclosure by the use of dielectric connections at the point of entry into the enclosure, and at wave-guides.

10.4 LIMITED PERFORMANCE RF SHIELDING

A. Limited performance shielding includes those areas of RF shielding not normally referred to as RF enclosures. This type of shielding includes partial and whole building RF shielding through the use of various foils or sheet metal systems designed to be integrated with the construction of the building.

B. Since the requirements for limited performance RF shielding are dependent on the specific job and will vary from job to job, the following are general requirements when called out by the Technical Security group of LMSSC Physical Security organization.

C. The wall(s) of the area to be partially shielded will be covered with 24 to 28 gauge sheet metal from the floor to the underside of the floor/roof above. The metal panels will be installed with an overlap of a minimum of 3 inches and will be attached to the supporting wall/structure with screws every 6 inches. The actual height of the sheet metal will be called out by Technical Security, and may be less than true floor to true roof/ceiling.

D. When required, the sheet metal will be installed on the floor for a distance of 6 feet from the wall and attached to the wall sheet metal with a minimum of 3 inches of overlap. Metal screws will be used every 6 inches. The metal will be attached to the floor with a suitable adhesive.

E. When called out, the seams of the overlap will be sealed with a conductive tape or sealant. On occasion this tape may be soldered.

F. In some instances, the roof/ceiling of the facility will require installation of sheet metal. The metal will be attached to the supporting structure, and will be connected to the wall sheet metal with a minimum overlap of 3 inches. Metal screws will be used on all seams and installed every 6 inches.

G. If the roof/true ceiling of the facility includes a metal pan, the wall shielding will be overlapped and attached to the metal pan a minimum of 3 inches. The metal pan should be cleaned so that a good metal to metal connection is made. Metal screws will be used for attachment and will be installed at least every 6 inches.

H. All seams of overlapping metal will be sealed with an electrically conductive tape, fabric, or sealant. On occasion this may be soldered. Conductive sealing will be required for all penetrations of the shielded surface, including all conduits, pipes, ducts, etc. Sealing of seams in metal roof pans and around metal structural members may also be required. All sealing shall be done such that a low impedance electrically conductive bond is formed between all portions of the two surfaces being sealed. The intent is to provide an unbroken RF shield of the treated area. This may include 100% coverage of all area walls, true floor, and true ceiling. Special care shall be taken to ensure that materials being bonded are chemically compatible, to avoid corrosion as much as possible.

I. The following are typical applications of limited performance shielding:

1. Type A wall

   Application of metal to one or more walls from floor to true ceiling, underside of roof or underside of floor above. Number of walls to be shielded will be called out by the LMSSC Technical Security group.

2. Type B wall

   Same as Type A wall with the added installation of metal to the floor and to the underside of roof, ceiling or underside of floor above, for a distance of 6 feet from the wall.

3. Type C wall

   Application of metal to all perimeter walls from floor to true ceiling, underside of roof or underside of the floor above, and installation of metal to the floor for a

distance of 6 feet from the wall and installation of metal to completely cover the underside of the roof, ceiling or floor above.

4. Type D wall

Application of metal to all perimeter walls from floor to true ceiling, underside of roof or underside of the floor above, and installation of metal to completely cover the floor and to completely cover the underside of the roof, ceiling or floor above.

10.5 RF DOORS

10.5.1 Doors in RF Enclosures

All doors into the RF enclosures are to be designed to maintain the required RF attenuation of the shield as well as the STC requirements of the enclosure. Unless otherwise stated in the project requirements documents, doors are to be 3 feet x 7 feet.

10.5.2 RF Doors in Limited Performance Shielding

A. Doors used in limited performance shielding designs are to generally conform to the RF attenuation and STC of the wall(s) that the door is within. All doors are to meet fire code regulations and Title 24 barrier free access regulations.

B. On some installations, the door frames and doors will be required to be fitted with conductive RF seals on all 4 frame sides and metal threshold.

C. The doors and frames must make electrical contact and be bonded to the wall of the metal shielding, with no degradation of the shielding effectiveness.

10.6 MECHANICAL PENETRATIONS

10.6.1 Mechanical Penetrations of RF Enclosures

A. All penetrations of the RF enclosure are to be designed to include wave-guides to maintain the required RF attenuation of the enclosure. All metallic penetrations must have dielectric isolators, installed as close as possible to the penetration point.

B. Ventilation

The wave-guides type air vent filters shall be of such design as to provide proper air passage for cooling and ventilation. Metal collars and non-conductive boots shall be supplied for connection to building duct work and dielectric connections.

C. Mechanical penetration

Provide wave-guides type pipe penetrations for all pipes penetrating the RF shield; preceded by pipe strainer and shutoff valves.

D. Wave-guides shall be designed to provide a minimum of 50 db of electric field attenuation at 10 GHZ. Pipes/conduits which would pass through the shielded area unbroken and unused within the area will normally not be allowed. They should be routed around or above the enclosure. If an exception is granted by the LMSSC Technical Security group, the pipe/conduit must be sealed and electrically bonded to the shield surface at each penetration point. If the pipe/conduit is not an electrically conductive material, it must be completely covered with an electrically conductive fabric for the entire length of its run within the shielded area, or wave-guides must be installed at the penetration points.

10.6.2 Mechanical Penetrations of Limited Performance Shields

All mechanical penetrations of any portion of a shielded surface are to be designed to include wave-guides to maintain at the penetration point.

10.7 ELECTRICAL AND COMMUNICATIONS FILTERS

10.7.1 Electrical and Communications Filters in RF Enclosures

A. All incoming electrical, data, smoke/fire protection circuits, thermostat, mechanical systems controls, security wiring, telecommunications etc., shall be provided with RF filters. Filters must be provided for each electrical wire including neutrals that enter or leave the enclosure. All filtered conductors shall penetrate the shielded material through isolated penetrations which are an integral part of the filter. All filters whether power, data, or telecommunications, should be reviewed by Facility Engineering organization to assure that the unit specified will meet the user requirements. The method of installing the filter to the enclosure will vary greatly to the type of enclosure specified. On welded steel enclosures the conduit from the filter to the penetration point must be rigid conduit with all seams welded. On modular enclosures, flanged hubs with RFI gaskets are required. Any conduit fittings or threaded appurtenances between filter exit and enclosure entrance must also be welded. The filter case must be monolithic member with the enclosure, and as such must be dielectrically isolated from any other grounds.

B. If filters are installed to provide EMC, lightning or EMP protection, an earth electrode shall be installed for the filter ground. In all cases, filters shall be grounded to the shielding or equipotential pane, or an extension thereto, that services the equipment requiring protection. This installation shall ensure a low impedance bond per MIL-HDBK-419A Section 1.7. The shielded end of the filter mounting enclosure shall be placed towards the non-secure facility side. Filters may be placed on either side of a shielding boundary provided they are always within the overall secure area perimeter.

C. Power filters shall provide 100 db of attenuation from 14KHZ to 10KHZ when tested under full load current per MIL-STD-220A. Power filters shall be rated at 125% of the circuit full load current. The power filter installation shall contain a green wire safety ground, bonded to the filter enclosure. This safety ground shall connect the building service ground to the panel board ground bar. These conductors shall be installed per NEC, Section 250-23(b) and sized per NEC, Section 250-95. The neutral conductor, if provided, shall be filtered. Load imbalance on a 3 phase system may require the use of a 400Hz power filter for the filter shall be run in ferrous RMC, IMC or EMT conduit. EMT conduit shall use ferrous compression fittings. Dielectric breaks shall not be used to break the conduit run to any power filter.

D. Telephone filters shall provide 100 db attenuation between 14KHz and 10GHz. Data filters shall be of a pass band type specifically designed for the data rates employed.

10.7.2 Electrical and Communications Filters Limited Performance Shielding:

These requirements will be dictated by specific project, LMSSC user and the LMSSC Technical Security group.

10.8 GROUNDING

10.8.1 Grounding in RF Enclosures

A. A single point ground system shall be provided for all RF enclosures. It shall be of the LMSSC Trirod S-P type. The established configuration must be adhered to and cable

lengths kept to an absolute minimum. The point of connection to the RF enclosure should be centrally located in relation to the filters point of entry. All ground rods used in the system must be 30 feet in length and 3/4 inch diameter. The accessible rod shall be located outside of the enclosure. All connections must be exothermically welded except the lead to the incoming ground plate which must be lug connected. The single point system shall be directly connected to the incoming power ground bus by a lug connection. The incoming ground plate will be clearly marked using 3/8 inch stamped, “caution - special single point ground”. Dielectric isolation of the enclosure must be maintained to a minimum of 10,000 OHMS.

B. Grounding shall be installed in accordance with the National Electric Code (NEC), MIL-HDBK-419A and MIL-STD-188-124A. Where conflicts exist, NEC shall take precedence. Amplifying guidance may be found in Federal Information Processing Standards (FIPS) Publication 94. The following assumes that building steel is connected to an earth electrode subsystem per MIL-HDBK-419A, Section 1.5.1.b and NEC 250-81(b). Refer to LMSSC FES, Section 5, Electrical Design Standards.

10.8.2 Ground in Limited Performance Shielding

A. Ground Provision

A single point signal ground shall be provided on the shielded material by means of 1/2 inch brass stud located on the panel and as near as possible to the power line filters. A ground shall be located inside of the shielded facility. Connection to the shield shall be RF gasketed flanged hub type. See LMSSC Construction Specifications, Section 13 49 00, RF Shielding, for more specific information.

B. Limited performance shielding shall be bonded to building structure at every junction per MIL-HDBK-419A.

C. All facilities relying solely on computer decking as the equipotential plan shall utilize a transient suppression plate at the point of power entry. This plate shall consist of a 22-28 gauge galvanized steel sheet not smaller than 40 square feet. A bond per MIL-HDBK-419A, Section 1.7, to the computer decking shall be provided. Refer to applicable LMSSC Facility Engineering Standards.

10.9 RED/BLACK ENGINEERING

Red/Black engineering requirements are necessary in all cases where Tempest security is a concern.

Red refers to any electrical conductor which carries unencrypted classified information.

Black refers to all other electrical conductors.

10.9.1 Red Couplings and Fittings

A. All red couplings, fittings, and conduit shall be ferrous metal and tested for magnetic attraction.

B. EMT with compression fittings can be used in controlled areas.

C. Rigid conduit with threaded fittings will be used in non-controlled areas. Further, these fittings shall be welded around 120 degrees + or - 5 degrees.

D. All red conduits and/or cables shall be distinctly marked with red tape or red paint at intervals of 1.5 meters.

10.9.2 Minimum Separations

A. All red conduits shall have a minimum separation of 6 inches from all black signal lines which are not in ferrous conduit.

B. All red conduits shall have a minimum separation of 2 inches from black signal lines in ferrous conduit.

C. There shall be a 6 foot separation between all non-Tempest approved red equipment, their associated wire lines/cables and any black non-filtered telephone or power lines, clocks, typewriters, personal computers, etc.

D. There shall be a 3 foot separation between all non-Tempest approved red equipment, their associated wire lines/cables and any filtered telephones or filtered power lines.

10.10 TESTING

10.10.1 Testing of Limited RF Shielding

Upon completion of construction and prior to occupancy, the facility will be subjected to a facility zone survey test. The test plan and procedure will be coordinated by the LMSSC Technical Security group.

10.11 FIRE PROTECTION SYSTEMS IN RF ENCLOSURES

A complete smoke and fire detection system shall be provided as required by codes and the Fire Protection group of LMSSC Facility Engineering organization. Refer to Section 8, Fire Protection Design Standards.

10.12 PHYSICAL SECURITY AND ALARMS

A. The physical security and alarms for RF enclosures will be as required in Section 6, Security Design Standards for the type of facility in which the enclosure is to be installed. ACAS installations inside the enclosure will require a filtered communications circuit to be installed inside the enclosure. Specific details on alarms and alarm filters will be provided by the ACAS group of LMSSC Facility Engineering organization.

B. The physical security and alarms for a Limited Performance RF shielded facility will be as required in Section 6, Security Design Standards for the type of facility in which the shielding is to be installed. If filtering of the ACAS communications circuits is required, it will be called out by the LMSSC Technical Security group.

10.13 AIR CONDITIONING SYSTEMS

10.13.1 General Air Conditioning Requirements in RF Enclosures

The design for air conditioning systems for use in RF enclosures should provide for minimal penetration of RF enclosure. In modular panel type enclosures the introduction of chilled water or make up water into the tank should be used only in cases where a ducted forced air system is not available. If a chilled water system is used, the A/C unit should be located outside the enclosure and the tempered air ducted in. Any control wires penetrating the enclosure are to be filtered.

END OF SECTION

SECTION 11
DRAWING PROCEDURES

11.1 GENERAL

11.1.1 Scope of Section

A. This section includes requirements for the format and content of drawings for all engineering disciplines, record documentation procedures, and CAD conversion of existing record drawings.

B. Additional requirements are contained in the CAD Drawing Standards, Appendix D.

11.1.2 General Requirements

A. All drawings shall comply with General Drawing Standards and Graphic Standards below.

B. On every project, complete as-built drawings shall be submitted for record.

C. All record drawings shall comply with Article 11.1.6, General Standards for Record Drawings.

D. For drawing numbering and project CAD Control Numbers, and requirements for submittal of CAD record drawings, see the CAD Drawing Standards, Appendix D.

E. All drawings submitted for design review and for record documentation shall include the stamp of the engineer or architect of record and name of company preparing the drawing and the name of the lead design company.

11.1.3 Definitions

As-builts— Construction drawings corrected per redlines.

Issued for Construction Drawings (IFC)—Permitted drawings issued for Construction at the time the Contract is awarded.

CAD conversion—The transfer of information from manual drawings to AutoCAD drawings.

Design Contractors—Providers of professional Architectural and Engineering services, including Architectural and Engineering firms, Design Build Contractors and design build subcontractors.

Drawing Coordination—Revising new and existing record drawings to avoid multiple conflicting drawings of the same building area or elements of construction within the record drawing library, while ensuring that no as-built information on existing drawings is lost.

Existing Drawings—Record drawings generated by previous projects, on file in the LMSSC Engineering Document Management System.

Engineering Documentation Management System (EDMS)– LMSSC database of drawings consisting of original building construction drawings, project drawings, contractors' as-built drawings, and other building and project information.

Keynotes—Numbered notes located in the note section of the drawing, with the note number appearing on the body of the plan.

LMSSC—Lockheed Martin Space Systems Company

Manual Drawing—Any drawing for which there is no AutoCAD file, including pencil drawings, plots of CAD drawings, sepias, etc. Manual drawings are available from the EDMS as image files in the Tagged Image File Format (TIFF).

Merge—To combine information from different CAD drawings.

Project Specific Information—Information on construction drawings that does not indicate how a building is currently constructed. Examples of project specific information:

- Demolition
- Methods and sequence of construction
- Instructions to the contractor on how to proceed; safeguards, prohibitions, etc.
- Indication of new and existing construction, points of connection
- Reference information such as unmodified standard details

Master Record Drawings—The single sets of plans for each building, incorporating information from as-built drawings of previous projects. They are intended to show current existing conditions and to provide base drawings for future construction documents.

Record Information—Information on a drawing indicating how a building is constructed, including information from both the current project and previous projects, excluding information on construction that has been removed. Examples of record information:

- Dimensions, elevations, ceiling heights, material transitions
- Detail and section symbols indicating drawings that show additional information
- General notes listing schedule drawings that schedule symbols are keyed to
- Circuit numbers
- Graphic indications within walls, wall type symbols and corresponding wall type legends
- Locations of ceiling mounted items, ceiling braces, draft stops
- Sizes of ducts, pumps, pipes, pipe designations, inverts, air and water flow

Redlines—Prints of construction drawings, with freehand as-built notation by the contractor, submitted at completion of construction, per FES Construction Specifications Section 01 78 39 Project Record Documents.

Temporary Drawings–Construction drawings that do not contain new as-built information, or with as-built information that will be transferred to record drawings. These include demolition drawings, sketches, non-modified standard detail sheets and "information only" drawings.

TIFF Files - Tagged Image File Format files. These are the electronic images of the manual drawings. Image files used by CE to store manual drawings.

11.1.4 General Drawing Standards

A. All drawings, including temporary drawings, shall be on a standard facility drawing sheet as described in Figures 11.1 through 11.9, and shall comply with Article 11.1.5, Graphic Standards, below. Complete the title and revision blocks as shown on Figures 11.7 through 11.8. Drawing numbering shall conform to Appendix D, CAD Drawing Standards.

B. All construction drawings submitted for permit shall include the standard LMSSC title sheet as shown in Figure 11.6, completed per the Architectural Drawing Standards, Article 11.3. A master title sheet for each building is on file and shall be used as the start model. The designer shall verify the completeness and correctness of the information on the start model, and notify the LMSSC Lead Architect of required changes to the master title sheet. Revise the Title Sheet Building Key Plan on the cover sheet to show current conditions.

C. CAD drawings shall be in AutoCAD, using the LMSSC standard file naming convention. Use the standard drawing border symbol block with attributed title block. Fill in all required information.

.

E. Construction drawing numbers shall conform to the Construction Specification Institute Uniform Drawing System (i.e. A1-1, E3-2, M4-3,…).

F. Under no circumstances may prints be used as baselines for manual drawings, other than temporary drawings.

11.1.5 Graphic Standards

A. Symbols and abbreviations particular to each engineering discipline shall be as shown in the Engineering Construction Details in Volumes I through IV of the Construction Specifications.

B. Section, detail, note, revision and other miscellaneous symbols shall comply with Detail V2–000C of the Construction Specifications. Use the Construction Drawing number along with CAD Control Number if applicable.

C. Sections, details, diagrams, elevations and enlarged plans shall have a reference symbol as part of their individual titles complying with the "Drawing Title" symbol shown in Detail V2-000C of the Construction Specifications.

D. The above mentioned symbols are available in standard symbol blocks. Obtain the blocks from CE and use them on all AutoCAD drawings. Do not explode or redraw blocks.

E. In order for text to be legible when drawings are reproduced at half size, text shall be 1/8 inches high minimum when plotted at full size. Title text shall be twice the height of the note text. Use only upper case lettering, ROMANS font. Normal text shall be of a uniform height on each drawing and from drawing to drawing, unless approved.

F. Symbol blocks incorporating text shall be scaled so text meets size requirements.

G. All plans shall have a north arrow in the lower right hand corner above the title block. When the original manual drawings were split into multiple areas, provide an area key plan to the left of the north arrow.

H. All drawings shall have a graphic scale to allow future reduced printing.

11.1.6 Record Drawings

A. Project As-built drawings are not filed in the master record drawing library as issued for individual projects. Rather, a single set of master record drawings is maintained and revised to show changes for each new project. New record drawings are created only when a new area is added to a building, for a new drawing type, or for new detail

drawings. The procedures below are intended to allow for the efficient updating of master drawings from project record drawings.

B. At the completion of every project, design Contractors shall submit complete as-built drawings in AutoCAD. In order to expedite updating of master drawings, ICE drawings shall be submitted immediately after the building permit is received and the project has entered the construction phase. Design Build contractors shall submit per the Design Build Scope of Services. Refer to CAD Record Drawings Files below for CAD file submittal requirements.

C. Incorporate all field red-lines into drawings. Project specific information may remain on drawings. Details and miscellaneous information may appear on floor plan drawings. Add all applicable information shown on record vellums (for the project area only). See procedure below for conversion of original vellum TIFF files.

D. Details referred to in the notes shall be repeated in detail call out symbols on the drawing. CAD Control Number (CCN) shall be placed next to all reference call-outs whether in notes or in reference symbols. Keep new text, notation and detail references within the project area wherever possible. This is so notation will not interfere with notation that may need to be added in future in adjacent plan areas.

E. Use consistent text size and format. Avoid placing text on top of other text and objects whenever possible.

F. Include record information from historical vellum drawings per Conversion of Original Vellum TIFF Files, below. It is recommended that conversion of TIFF files should start during pre-design field verification so that the most accurate drawings are used for design.

G. In the Revision Block use the last revision number line to identify the drawing as “RECORD DRAWING” and include the as-built date

11.1.7 Conversion of Original Vellum TIFF Files

A. Image files of historical vellums that apply to the project shall be obtained at the beginning of the project and field verified. Original detail call-outs, verified dimensions and other construction information shall be added to the record drawings.

B. The area of the project shall be clouded on image files of all of the vellum drawings that show that area of work. Transfer all construction, notes, and information shown in the clouded area that is still applicable, including original detail call-outs and verified dimensions. Detail drawings and other drawings referenced from the plans shall be clouded to show removal of details that no longer apply.

C. Schedules and details drawn on superseded plan record drawings will not be transferred to new plan drawings. Where such schedules and details still apply, the original drawing shall be maintained as a detail or schedule record drawing with its original number.

D. On each vellum image provide a revision symbol and revision line item and note “Refer to new drawing number _____.” Add a numbered revision titled “Converted to AutoCAD”. Add a note to the new drawing stating "Information Copied from Drawing ___." The image file shall be resubmitted with same drawing number but a higher revision number than drawing obtained from LM. Either PDF or TIFF files are acceptable image file formats. Do not change the name of the files as they are unique identifiers.

11.1.8 CAD Record Drawing Files

A. Submit CAD files on a disk organized in folders named by drawing discipline. The disk shall include an Excel spread sheet with the column fields identified below. This spread sheet will be used to import documents into LM documents management system in a batch process
   1. Bldg No.
   2. Floor No.
   3. Area No
   4. Discipline name
   5. Drawing Title
   6. LM Project Number (FMR or CER)
   7. CAD file ID
   8. CAD Control Number
   9. Construction Sheet Number

B. CAD file IDs shall conform to the following numbering scheme: bldg# + CAD Control # + Construction Sheet # (e.g. 151-505-A11.dwg, 151-505-M21.dwg, 151-505-E21.dwg, etc.)

C. All XREFs shall be bound in the record drawing file submittal at the end of the project. Xrefs may remain “as is” in the Issued for Construction CAD files submitted at the beginning of construction, but all reference files shall be submitted on the same disk.

D. Layers shall be selected from the list of layers in the LMSSC-CAD standards (AIA layers). If other layers are needed, send a request for layers to LM CAD group for approval. Layers proposed must come from AIA standards

E. All new work must reside on layers that end with “-N”. All demo work must reside on layers that end with “-D”. All field verified dimensions that corrects the area of work but is not revised by the project must reside on layers that end with “-E”

F. As-built CAD files shall not contain frozen or turned-off layers

G. All files must be purged before submission to LM

11.1.9 Ownership of Drawings

A. The originals of all drawings and electronic drawing files, existing and new, shall remain or become the property of LMSSC. They shall not be reproduced or released to persons outside LMSSC without written authorization.

11.2 CIVIL DRAWING STANDARDS

11.2.1 General Standards

The intent of this section is to instruct a civil engineering firm or in-house engineers to produce specific civil construction plans to a high degree of professionalism by calculating and drafting such civil engineering items as:

Plan and profile of street and utilities.
Horizontal and vertical curves with curve data and grades.
Plotting hydraulic grade lines.
Calculating street alignments with “BC”, “EC”, tangents, deltas, etc.
Showing stations and grades at a minimum of 50 feet intervals for entire project or smaller internals as required.

Designing all intersections, street lighting, concrete structures, etc.

11.2.2 Scales

A. All drawings will be on LMSSC size “E” Plan and Profile Vellum sheets using 1 inch = 3 feet vertical and 1 inch = 30 feet horizontal.

B. Intersection details will be 1 inch = 20 feet.

C. Details may be 1 inch = 10 feet or 1 inch = 20 feet.

11.2.3 General Layout

Before any drafting is done on a project, it is necessary to make a preliminary evaluation of the drawings. Specifically, determine the orientation and the number of plan sheets and detail sheets required. These sheets shall be numbered in the following sequence: Title, Typical Gross Section, Plan and Profile, Intersection Details, Drainage Plan and Profile, Drainage and Structural Details. The processes of plan layout can best be described in outline as described below. The order is not necessarily correct, but all of the items should be considered while preparing plans.

11.2.4 Sheet Layout

The normal portion of a project to be shown on each sheet is 12 stations. This allows room at each end for datum reference elevations in profile and dimensions on plan. Each sheet should represent a complete and clear portion of the project. Do not terminate a sheet within an intersection or drainage unit. Allow adequate space on the end sheets for the design requirements of pavement transitions and intersections. Sheets shall be numbered so that the project reads from north to south or west to east.

11.2.5 Orientation

Streets shall be oriented on the plan in such a manner as to cause the north arrow to point up or to the left.

11.2.6 Limits

A. Limits for the total improvement of each street shall be shown on all drawings for that street. The limits of the project shall read north to south or west to east.

B. Horizontal control shall be reference to both the LMSSC grid system and the State of California survey coordinate system at “critical” monuments only. All other central control points shall be stationed relative to the project.

C. The vertical control shall be to the LMSSC elevation datum which is shown on the LMSSC contour sheets dated February, 1987. The LMSSC Civil Engineering group will direct as to where monuments will be set in the field.

D. Determination of the datum elevations is as follows:

Prior to plotting the profile, the elevation differentials on each sheet should be investigated to determine that the profile lines can be plotted to an acceptable scale. The heavier horizontal lines shall be considered as 5 or 10 foot elevations. These lines are used as a reference plane, and the reference elevation is shown at each end of the sheet, and where the datum plane changes.

Whenever it is necessary to break the profiles, the break points should be staggered by at least 20 feet horizontally.

E. Identify each profile line

Normally, there are three profile lines plotted: the center line and left and right-of-way lines as given below.

Plot each profile line on the front side of the sheet as follows:

1. Center line

   Plot every point given in the survey notes. Connect the points with a solid ruled line where surface is paved, otherwise a light freehand line should be used.

2. Right-of-Way lines

   Plot every survey point including paved driveways and connect points with a freehand solid line where no pavement exist. Use heavier line in profile to indicate driveways. Do not extend line across an intersecting street. When a curb is to remain in place plot top of curb with medium weight ruled dashed line in lieu of right-of-way profile. Existing top of curb elevations are to be given at each station and existing edge of gutter elevations given at each one-half station if joining at edge of gutter.

11.2.7 Plan

A. Center Line

Locate in the approximate center of the plan portion of the sheet. Stationing corresponds with the profile stationing and copied verbatim from the LMSSC Base Map in the following order:

1. Bench mark number and reference

2. Elevation, LMSSC coordinates

3. Description and location

11.2.8 Reference Data

A. Existing curb return radii are to be shown if curb is to remain.

B. Drainage arrows to be shown on streets, giving direction of flow and rate of grade of 0.1%.

C. Add note, see sheet number at end of plan sheet. Place adjoining sheet reference numbers where applicable to refer to continuation of plan on following sheet.

D. Existing center line curve data shall be shown.

E. Locate the north arrow in the vicinity of the title block.

F. Give the name of each intersecting street.

G. Dimension the street widths.

11.2.9 Detail Sheets

These sheets are usually drawn to a large scale, showing more construction details and less topography than shown on the plan and profile sheets. The topography on drainage plans should be limited to show only the portion which affects the drainage structures. Substructures are identified by note.

11.2.10 Title Sheet

Comply with standard LMSSC format. See Section 11.3.1.

11.2.11 Right-of-Way Lines

Plot the final road right-of-way lines which will be required for the construction shown on the plan. Right-of-way lines or easements of other public agencies, and utilities are also to be indicated on the plans. Identify these by ownership and width.

11.2.12 Topographs

Show all topography within the limits of the improvement by symbol, as shown on the front sheet. Plot on the reverse side of the plan. Type of existing pavement should be indicated at joints. Existing macadam covered pavement should be labeled even though it is to be removed.

11.2.13 Bench Marks

A bench mark shall appear on every plan sheet. The bench mark descriptions shall be obtained from the LMSSC Civil Engineering group.

11.2.14 Survey Interpretation

The following standards are used by the survey crews in the location of miscellaneous topography.

A. Offsets to objects shown on miscellaneous topography list are taken to the edge nearest the center line of the street at the point where the object enters the ground. Offsets are the nearest tenth of a foot.

B. Diameters of all trees may be given in fractional form with the numerator denoting the waist-high diameter, and the denominator the diameter at the ground; i.e., 15 inch/24 inch palm tree.

C. Where one station is sufficient to locate an object, it is the center line station. In general, the nearest foot is given.

D. When working within 100 feet of an intersection, objects likely to be relocated (fire hydrants, poles, etc.) are located with the transit. These objects may be shown on the miscellaneous topography list; stations shown to tenths of a foot indicate that the transit was used.

E. Since elevations of manhole lids are necessary, manholes are shown in the transit topography. Stations and offsets are to center.

11.2.15 Plan Notes and Details

This subsection explains the design and completion phases of plan preparation and sets standard practices of showing additional construction information on plans which may not have been shown on the sample plans.

A. CONSTRUCTION CENTER LINE

1. Determining need

When the section of a proposed roadway is not symmetrical about the survey center line, it is usually convent to establish a construction center line for dimensioning and stationing purposes.

2. Ties to survey center line

The construction center line will be located on the ground from ties to the survey center line. These ties or relating dimensions between the two lines should be given on the plan at intersections; changes in direction such as angle points, BCs and ECs, are not to exceed 500 feet along tangents. The tie should be normal to the construction center line.

3. Equations

The construction center line is equated to the survey center line at the point where the two lines coincide and the stationing differs. It is better to equate the two lines outside the limits of construction if possible.

B. GRADE LINES AND ELEVATIONS

1. Rates of grade are shown for all grades longer than 50 feet and for all tangents to vertical curves from P.I. using center line stationing. It is desirable, but not required, that the grade be expressed in percent to two decimal places and at the same time be divisible by two. Otherwise, the grade must be expressed in percent to three decimal places. Top of curb grade line percent should be expressed identical to that shown for the center line or median of gutter whenever the typical cross section applies.

2. Elevations on profile are shown for all vertical and horizontal control points. These points being joints, breaks in grade, BVC, EVC, and P.I. of vertical curves, BC and EC of horizontal curves and angle points. The maximum distance between elevations is 50 feet, except for vertical curves and on concrete pavement where the maximum is 25 feet. Stationing will only be shown for those points that do not fall on 25 chords, i.e., +00, +25, +50, +75.

3. Elevation on plan are shown on any portion of the roadway which deviates from the typical section or is not shown on profile. These elevations begin with the last typical section and end at the beginning of the next typical section. Criteria for the elevations to be shown should be the same as for those shown on the profile.

C. CURVE DATA

Give curve data for center line curves and curb curves which are not concentric with the center line. A curve data table will be used with more than three curves and the curves identified by a circled lower case letter. Avoid using the letters j, i, l, o, and z. If possible, whenever a curve continues onto another sheet, the curve should be identified by the same letter on each sheet. Show tangent length for curved street

center line or curved pipe center line only. Back of walk radius should be shown either at the back of walk or in a separate column in the curve data table.

D. CONSTRUCTION NOTES

1. Numerical notes

   Used to designate construction on all plans which have a title sheet.

2. Literal notes

   Used where numerical note is not applicable. These notes should be placed parallel to the center line of the principle street being improved but may also be placed parallel to the center line of an intersecting street when work is also performed on that street.

3. The notes on drainage detail sheets should define the type, size and length of pipe, culvert, type and size of box culvert or catch basin, and the type and sizes of structures, such as manholes, etc.

11.2.16 Drainage Plans

A. Connections to or minor extensions of existing drainage systems may be shown on the roadway plan and profile sheet if there is adequate space on the sheet.

B. New main line drain construction will be shown on a separate 30 scale drainage plan and profile sheet. Items which should be shown on this plan are:

1. Street center line and right-of-way lines.

2. Plan and profile of the drainage system including all ties to the center line.

3. All underground utilities.

4. Catch basin or inlet locations and all necessary elevations.

5. Profiles of the existing surface and the proposed surface over the center line of the pipe.

6. D-loading for reinforced concrete pipe.

7. Only RCP will be used for storm drains.

8. Structures shall be indexed with a corresponding number enclosed in a circle on both plan and profile. Numbering sequence shall increase in an upstream direction.

9. Inlets and outlets of pipes shall be located by station and offset if the location is not apparent.

C. Drain pipes 36 inch or less in diameter may be shown as a heavy solid line on the drainage plan. Drain pipe larger than 36 inch in diameter should be shown as a center line and two solid outside lines. The latter method should apply to drawing scales larger than 1 inch = 20 feet.

D. The use of 20 scale detail sheets will be restricted to unique or complex conditions which can be shown in no other way.

11.2.17 Miscellaneous Plans, Maps, Sketches

A. Street R/W map

A separate sheet R/W map will be submitted at a scale of 1 inch = 30 feet showing these items:

1. The street center line with the monuments and coordinates (LMSSC and State of California) at all sheet intersections and beginning and ending of curves shown with a heavy black line.

2. Proposed utilities will be shown in easements, preferably in the street.

3. New or realigned streets will show easements as per the LMSSC standard utility drawing.

4. The R/W map will be superimposed on the LMSSC monuments shown on the LMSSC contour map.

5. The basis of elevation will be the LMSSC monuments shown on the LMSSC contour map.

6. The basis of bearings will also be these monuments.

B. Street names

To be shown on center line on each sheet. Name will be as shown on LMSSC Plant 1 Master Plan.

C. North arrow

To be shown on each plan sheet near the title block. North to be up or to left.

D. Bench marks

To be obtained from survey section and shown on each sheet of plan and profile, drainage plan and profile, and intersection details.

E. Existing established grades

To be obtained by field survey.

F. Soil report

To be submitted in engineering report format listing:

1. Boring logs

2. Water table

3. R-value of soil

4. Compaction curves

5. Recommended asphalt concrete section based on CALTrans design method using LMSSC 20 year traffic volumes, H-20 loadings.

G. Topography

Shown in a gray tone or on back of sheet if practical.

1. Topographic symbol as shown on project title sheet.

2. Grade and drainage arrows on side streets.

3. Existing pavement - light freehand dashed line for asphalt; ruled, dashed lines for concrete.

4. Label and dimension existing pavement to be joined or saved.

5. Show all driveways.

6. Show pluses for beginning and end of existing improvement that is joined.

7. Jurisdictions

Show federal, city, county boundaries.

H. Profile of existing terrain or improvements

1. Existing center line shown with a solid ruled line if surface is paved or a solid freehand line if not paved. Property line profile shown by a thin freehand solid line.

2. Center line profile continued through intersections, property line profiles end at beginning of curb returns.

3. Profile line to be labeled. Designate profile grade lines. Example: right TC grade line or existing TC profile 40 feet left or median right EG grade line.

4. Datum shown for each profile line.

5. Top of existing curb shown by medium ruled dashed line and top of curb elevations given at each station. Existing edge of gutter elevations given at each 1/2 station if joining at edge of gutter.

6. Existing top of curb and flow line elevations should be shown at the join.

7. Show driveways as a heavy line on the property line profile.

11.2.18 New Construction

A. PLAN

1. Center line curve and curb curve data shall be shown on each plan sheet. (Use table with three or more curves.)

2. Construction symbols and notes.

3. Dimensions

a. Center line to curb line at the edge of the roadway.

b. Center line to curb line at the edge of the roadway.

c. Walk widths. Show existing dimensions at joins.

d. Gutter widths. Show existing dimensions at joins.

e. Property line to edge of walk.

f. Center line to median edge of gutter.

4. Cross gutters

a. Show type to be used, and thickness of base material, if greater than called for on the standard plan.

b. Minimum 0.30 feet cross fall B.C.R. to E.C.R.

c. Type “1” is to be used unless otherwise directed.

5. Walk

a. Thickness is 4 inches.

b. Show the back of walk return radius in the curve data table or on the plan.

6. Driveways

a. Indicate by symbol on plan sheets.

b. Investigate driveway profile for good design. Maximum, grade 5% with a 15 foot minimum distance between grade breaks except in extreme conditions.

c. Asphalt driveways - 6 inch Type A.A.C. (commercial).

d. P.C.C. driveways - 6 inch thick (commercial).

7. Alley intersection

Show flow line elevation at right-of-way line unless standard.

8. Structural section under curb and gutter. When the structural section is 14 inch or greater the subgrade section will be carried to the back of curb.

B. PROFILE

1. Grade may be expressed to two decimal places and at the same time be divisible by two. Otherwise, it must be expressed to three decimal places.

2. When joining existing improvements, show station and “join” above the leader elevations below the leader.

3. Circles on grade line breaks, B.C.R., E.C.R. and joins.

4. Percent of grade given on tangents longer than 50 feet and on tangents to vertical curve measured to the P.I.

5. Give elevations and stationing at:

    a. B.C.R.
    b. Breaks in grade
    c. Beginning of curves
    d. Ending of curves
    e. Joins
    f. End of transitions points on cross-section, gutters, catch basins, and local depressions
    g. Points of intersection of vertical curves

6. Elevations given every half station on the control grade line(s)

7. Curb returns

    a. Plot actual length
    b. Elevations given at fractional intervals of delta
    c. Check for sag in curb return

8. Grade (design criteria to be used if possible)

    a. 0.5% maximum break on center line and curb line
    b. For more severe breaks shorten chord lengths (minimum 20 inches)
    c. 1.0% maximum break at B.C.R. and E.C.R.
    d. Use straight grade on cross gutter
    e. 0.15% minimum grade. Preferred minimum grade 0.4%
    f. Minimum drop around curb return 0.15 feet or 0.3%
    g. 3.0% maximum grade break on center line of local streets at the intersection of a major or secondary highway

9. Vertical leader to grade line for the edge of roadway curb grades

    a. Grade breaks
    b. B.C.R.
    c. E.C.R.
    d. Where any elevation is given except 50 foot elevations

10. Note for identical points when grade line broken. Stagger break points at least 20 feet horizontally.

11. Placing of grade elevations

    a. An elevation should be given in profile or plan for each point to be staked in the field.
    b. Edge of roadway T.C. elevations to be given on the right side of vertical profile grid.
    c. Stationing on left side of vertical profile grid.
    d. Stationing and elevations for center line or median edge of gutter grade lines should be shown as lines on a leader 60 degrees from horizontal.
    e. For variable curb face in excess of 50 feet, show flow line elevations.

f. Existing driveway should be checked for location and elevations shown on plan and profile, but pluses and elevations are not necessary.

11.2.19 Estimated Construction Quantities

Place a listing of quantities to be constructed on each sheet of the improvement plans. The listing shall have identifying numbers in sequence which refer to numbered locators on the improvement plans. Each numbered locator shall be enclosed in a small circle and a pointer indicating which construction item is being identified. The listing shall look as follows:

Description	Quantity
Construct type 1 curb and gutter	500 LF
Remove existing concrete pad 6 inch pad	30 SF
Install stosign (R1)	4 EA

11.3 ARCHITECTURAL DRAWING STANDARDS

11.3.1 Title Sheet

A. PURPOSE

To provide a standardized cover sheet for all construction document drawings, and provide general overall project information. This cover sheet shall be used on all LMSSC building and permit packages.

B. CONTENT

1. To include but not limited to:

   a. LMSSC logo

   b. Street address

   c. Project title and ER number

   d. Project location

   e. Planning information

   f. Building department information

   g. Hazardous material information

   h. LMSSC Project Engineer

   i. Project Architect/Engineer

   j. General notes

   k. Drawing index

   l. Key plan code compliance information

2. The title sheet shall not contain information such as:

   a. A/E logo

b. Standard symbols

c. Standard abbreviations

d. Wall/material indications

C. FORMAT

1. Layout

a. Use the LMSSC standard Title Sheet with no deviation from this format. Reference Figure 11.7.

b. Cad Engineering (CE) shall provide the following baseline CAD generated document:

Prompts for drawing index with discipline titles
LMSSC logo
Prompts for building, street, ER number, and project title
Prompts for planning and building department information
Prompts for LMSSC Project Engineer, Project Architect/Engineer
Site location maps
Standard “general notes”, and fire protection notes
Code and compliance key plan, if in database

c. Cad Engineering will complete the title sheet if complete information is provided on the baseline document. The Project Engineer or Project Architect may also complete the information from the baseline drawing provided by CE.

2. Scale

None

3. Grid lines

None

4. Dimensions

None

5. Sheet title

None

D. SPECIFIC INFORMATION - BUILDING DATA

1. Site area
For LMSSC Plant 1 facilities, state parcel number and parcel area as shown in the Building Supplemental Records (BSR).

2. Allowable building area

a. For existing facilities with no new square footage, state “existing with no modifications.”

b. For new facilities or modifications to existing, state the allowable building area as defined in Chapters 4 and 5 of the Uniform Building Code (UBC), or as allowed per the local planning requirements (i.e., as stated in the Sunnyvale Municipal Code). State allowable building area for each occupancy (minor accessory uses shall be assumed under the major use) and for each building separation.

3. Actual building area

a. For new and existing facilities, state existing (for actual) square footage of the facility as defined in Chapters 4, and 5 of the UBC.

b. State the actual building area for each occupancy (excluding minor accessory uses) and for each building separation.

4. Side yard separation

State the minimum side yard separation and the quantity of sides separated (i.e., 40 feet on three sides). Refer to Chapter 5 of the UBC.

5. Type of construction

a. State the type of construction as defined in Chapters 17 through 22 of the UBC.

b. State if the building is equipped with an automatic sprinkler system.

6. Number of stories

State how many stories the facility contains (refer to the definition of story and mezzanine in Sections 414, 420, and 505 of the UBC).

7. Occupancy

State the occupancy type(s) as defined in Chapters 5 through 12 of the UBC. List all minor accessory use occupancies.

8. Building zone

State the zoning group as assigned by the local planning authority.

9. Parking required

State the minimum parking requirement based on local planning requirements.

Note: For LMSSC Plant 1, the minimum parking required may be based on the total building population provided the facility is not remote from the general parking of the parcel. If the facility is remote (or inaccessible), state the minimum parking dedicated to the facility.

10. Actual parking

State the actual (or proposed) quantity of parking stalls on the site or parcel.

Note: For LMSSC Plant 1, the actual parking quantity may be based on the parcel, provided the facility is not remote from the general parking of the parcel. If the facility is remote, state the actual parking dedicated to that facility.

11. Handicapped parking

    State the actual (or proposed) quantity of stalls which are accessible to the handicapped from the facility.

12. Landscaped area

    State the actual (plus the proposed addition of, if required) area of landscaping for the site or parcel.

E. NAMES OF PROJECT ARCHITECT AND ENGINEER

1. LMSSC Project Engineer

   State the name and phone number of the assigned LMSSC Project Engineer.

2. Project Architect/Engineer

   State the name, company (if not LMSSC), and telephone number of the responsible licensed architect or engineer assigned to the project.

F. KEY PLAN CODE COMPLIANCE INFORMATION

1. Show complete information required for plan check. If this information has not previously been put on the sheet, or needs to be changed, provide new information to the Cad Engineering group who will and add to the master title sheet so that information will be available to future projects. Refer to Figures 11.7 and 11.8.

2. Information shall include but not limited to:

   a. Graphic representation of building (all floors) with column indicators and North arrow. Scale or exact detail is not important.

   b. Primary exit paths/corridors (not aisles) to include stairs. Indicate both rated corridors and non-rated corridors.

   c. Area separation walls.

   d. Occupancy separation walls. State occupancy type(s). State square footage of minor accessory use areas.

   e. Control areas per UFC and Chapter 9 of the UBC.

   f. Restroom locations. State if restroom complies with Title 24 access compliance.

   g. Main handicapped entry location. This location should relate to handicapped parking location.

h. Identify boundary of “area of work” for work to be performed. Do not retain information from previous projects.

11.3.2 Architectural Site Plan

A. PURPOSE

The Architectural Site Plan is an overall view of a building site showing exterior features of buildings, accessory buildings, distances between buildings and site features.

B. CONTENT

To include but not limited to:

1. Property lines and parcel lines
2. Buildings and accessory structures on the site, showing roofscape, including canopies and overhangs, parapet walls, roof drains, crickets, penthouses, major equipment outlines, roof screening
3. Adjacent streets with names, noting curb to curb width
4. Paving vehicular circulation areas, parking layout, striping, landscaped areas
5. Sidewalks, curbs, gutters, including paving joints
6. Drains and catch basins
7. Steps and ramps, including handrails
8. Ground mounted equipment
9. Fences, gates and walls
10. Fire hydrants, PIV’s, electroliers, bollards, site furniture and other surface items.
11. Overall building dimensions, distance between buildings, and distance to property lines

Do not show underground utilities, footings and other below surface items. These may be shown on drawings of other engineering disciplines.

C. FORMAT

1. Orient the plan so that north is at the top of the sheet
2. Show site areas serving the building, including minor and accessory buildings and all parking stalls that are used to satisfy parking requirements. Show surrounding streets
3. Show faces of other major buildings nearby as appropriate
4. When two or more major buildings are attached or in close proximity, show them on the same site plan
5. Format the drawing to plot on an E size sheet at a typical Civil scale such as 1 inch equals 15, 20 or 30 feet. Use a larger scale such as 1 inch equals 40, 50 or 60 feet only when required to show all elements
6. Spatially locate the drawings to a common point for each of Plants 1 and 2 to allow assembly into a Plant Site Plan. Refer to the CAD Standards.
7. Show all the buildings in a complex on the same plan if they can be plotted on an E size drawing at 1 inch equals 30 feet.
8. Title the drawing “Architectural Site Plan”

D. SPECIFIC INFORMATION

1. Draw all items to exact scale
2. Show exterior face of building walls as heavy line. Show as heavy dashed lines under overhangs and canopies. Overhang and canopy edges to be medium weight lines.

3. Show building numbers
4. Indicate first floor elevation of each building. Coordinate with Civil drawings.
5. Indicate count of parking stalls at each cluster of stalls
6. Provide clarifying notes as required

11.3.3 Architectural Floor Plan

A. PURPOSE

To define the footprint and layout of the facility while providing horizontal dimension control. Primary coordination document for all other contract drawings.

B. CONTENT

To include but not limited to:

1. Permanent walls, security curtains, wire mesh partitions, etc., identified with alphanumeric wall type and graphic indication
2. Doors, windows, louvers, access panels
3. Structural columns, bracing, slabs, trenches, expansion joints
4. Horizontal dimensions
5. Generic room identification per UBC Table 33A
6. Reference sections, details, elevations, enlarged plans
7. Stairs, elevators, conveyers, ladders, and ramps
8. Specialty flooring (access floors, grates, mezzanines)
9. Casework, backboards, blocking, shelves
10. Toilet accessories
11. Plumbing accessories (water closets, lavatories, service sinks, drinking fountains, risers, drains, clean outs)
12. Electrical accessories (electrical panels, shafts, pay phones)
13. Fire protection accessories (main risers, fire hose and extinguisher cabinets)
14. Mechanical accessories (shafts, equipment outline, crane limits)
15. Built-in stationary equipment (racks, lockers, fixed seats or benches, chair lifts)
16. Key plan with north arrow
17. Wall legend
18. Specific notes and cross references
19. Graphic scale

The following are generally shown on Furniture or Equipment Plan and not on the Architectural Floor Plan:

1. Movable partitions (Papsco, Haworth)

2. Furniture

3. Movable equipment.

   The above items shall be separated on various CAD layers according to Appendix D, CAD Drawing Standards.

   The horizontal drawing plane shall be assumed to be at 4 feet - 0 inch above the finish floor elevation. Items below this plane shall be shown by solid lines, items above this plane shall be shown by dashed lines.

C. FORMAT

1. Layout

   a. The architectural floor plan shall set orientation, location, and baseline format for all other contract drawings.

   b. North is typically oriented toward the top of the sheet, or toward the left side of the sheet.

   c. The division of the floor plan into areas shall be identified by number, starting at the upper left and proceeding left to right, top to bottom. Cad Engineering group shall provide division lines. Division lines shall be located along structural column lines.

   d. Floor plans shall be identified with alpha indicators for cross referencing.

   e. Notes shall be located to the right of the building outline between the floor plan and below the legend information. Reference Figure 11.6. If space is inadequate, then they shall be located on the first available floor plan, and cross referenced on both plans.

2. Scale

   a. Standard scale shall be 1/4 inch = 1 feet - 0 inch. Refer to other sections of these Drawing Procedures for scales required for other disciplines. For construction drawing(s) issue, the floor plan may be plotted at 1/8 inch = 1 feet - 0 inch as long as the CAD files are in 1/4 inch = 1 feet - 0 inch scale. Refer to Appendix D, CAD Drawing Standards.

   b. When the entire 1/4 inch scale floor plan cannot fit onto one “E” size sheet, a smaller scale coordination drawing shall be drawn for clarity and reference. Reference Architectural Coordination Floor Plan Section.

   c. When the construction issue is plotted at 1/8 inch = 1 foot - 0 inch, larger scale floor plans shall be drawn when complexity or dimensional control is required. Cross reference the larger scale (1/4 inch) plan from the smaller

scale (1/8 inch) plan. Examples which may warrant 1/4 inch scale plans are as follows:

Restrooms
Computer rooms
Mechanical or electrical equipment rooms
Stairs or elevators
Process or lab areas
Lobbies or conference rooms
Kitchens

d. Mechanical and/or electrical drawings may be required to be at a larger scale due to congestion and complexity. This may require sub-areas without disturbing or causing overlap of the original division lines.

e. All miscellaneous items shall be drawn to exact scale and dimensioned accordingly.

3. Grid lines

Provide grid lines at all major structural grids. Provide column indicators at the top and left side of the floor plan.

4. Dimensions

a. Provide three levels of dimensions at the top and the left side.

Overall dimension
Grid line dimensions
Miscellaneous dimensions

b. Provide one level of dimensions at the bottom and right side for miscellaneous dimensions.

c. All miscellaneous dimensions shall be dimensioned from the grid line.

d. Do not repeat specific dimensions from larger (1/4 inch) scale plans on smaller (1/8 inch) plans.

e. Windows shall be dimensioned to center line.

5. Sheet title

a. Use the terminology “Architectural Floor Plan”.

b. For single level facilities, use only Architectural Floor Plan.

c. For multi-level facilities, use Architectural Ground Floor Plan, Architectural Second Floor Plan, Architectural Ground Floor Mezzanine Plan, Architectural Interstitial Floor Plan, etc.

D. SPECIFIC INFORMATION

1. Room numbers

a. Room numbers are determined by the Facility Operations and Services FM-Interact system. The number will typically have two digits for the floor number, a dash, a letter, and four more numbers. Prior to first floor plan submittal, submit layout to Work Space Management Group for assignment of room numbers.

b. Stairs and elevators shall be labeled by simple numbers, since they relate to more than one floor (stair 1, stair 2, elevator 1, etc.).

2. Door numbers

a. Door numbers may be used in conjunction with the standard door symbol, placed above the symbol. The door number will be the permanent room number with an alphabetical suffix as required for rooms with more than one door.

b. When a door can be numbered for either of the rooms it separates, use the number of the smaller room. Example: rooms off a corridor or an open office area shall be the room and not the corridor or open office area number.

3. Wall types and wall type schedule

a. For typical interior walls use the standard wall type symbol consisting of a square with a letter followed by a number. The wall type symbol is shown on Standard Detail V2-000C sheet 3 of 3. For “one of a kind” walls, section references may be used instead of wall type symbols. The letter designation of the wall is standard for the generic type of wall, as indicated in Standard Detail V2-000B sheet 1 of 1.

c. Each floor plan shall contain a wall type schedule listing the wall types used on the drawing. The wall type schedule shall include the graphic wall indication, the alphanumeric wall type symbol, and a description of the wall construction. Standard Detail V2-000B sheet 2 of 2 shows an example of a typical wall type schedule.

d. The wall construction description shall include the generic wall type name from V2-000B sheet 1 of 2, the vertical termination of the wall, the stud size, material, gauge and spacing and the detail reference.

e. When adding new wall types, check the existing master record drawing to determine what wall type designations are already being used. If a new wall is identical to an existing wall, the existing designation may be used. Otherwise use a wall type number different from existing wall types.

5. Notes

a. General notes shall be permanent notes limited to general information required for properly interpreting the plan. They shall not be project specific and shall apply to the drawing overall.

b. Drawing notes shall be permanent notes that are keyed on the drawing, limited to information required for understanding the drawing, and shall apply only to the area or item referenced.

c. Project notes are temporary, project specific notes that clarify the project scope of work. They shall be separate from other notes and shall be removed at the as-built revision.

6. The Architectural Floor Plan shall not contain information such as:

a. Drawings of details or sections

f. Door and finish schedules
g.
c. Lists of abbreviations

d. Specific information

11.3.4 Architectural Coordination Floor Plan

A. PURPOSE

To define the overall footprint and layout of the facility. Used as a reference for discussion and code compliance, and as a possible background for other disciplines. Used only when the Architectural Floor Plan will not fit on one drawing.

B. CONTENT

To include but limited to:

1. Permanent walls
2. Doors, windows,
3. Structural columns
4. Horizontal dimensions
5. Generic room identification
6. Reference building sections, exterior elevations
7. Stairs, elevators, ramps
8. Key plan with north arrow
9. Specific notes and cross references
10. Occupancy separations
11. Area separations
12. Allowable area calculations
13. Exit paths
14. Restroom access
15. Graphic scale

The above items shall be separated on various CAD layers according to Appendix D, CAD Drawing Standards.

The horizontal drawing plane shall be assumed to be at 4 feet - 0 inch above the finished floor elevation.

C. FORMAT

1. Layout

a. The Architectural Coordination Floor Plan shall set orientation for all Architectural Floor Plans.

b. North is typically oriented toward the top of the sheet, or toward the left side of the sheet. Orientation shall match Architectural Floor Plans.

c. The floor plan shall be identified with an alpha indicator for cross referencing.

d. Notes shall be located to the right of the building outline between the floor plan and below the legend information. Refer to Figure 11.6. If space is inadequate, then they shall be located on the first available floor plan, and cross referenced on both plans.

2. Scale

No standard. Scale as required to fit on drawing.

3. Grid lines

Provide grid lines and column indicators at all major structural grids.

4. Dimensions

a. Provide two levels of dimensions at the top and the left side.

Overall dimension
Grid line dimensions

b. All miscellaneous dimensions shall be on the Architectural Floor Plans.

5. Sheet title

Use the terminology “Architectural Coordination Floor Plan.”

11.3.5 Reflected Ceiling Plan

A. PURPOSE

To locate and coordinate all elements of the ceiling assembly including mechanical, electrical, fire protection, and architectural disciplines.

B. CONTENT

To include but not limited to:

1. Permanent walls (doors not shown)

2. Ceiling grid

3. Hardcapped ceilings

4. Architectural elements

Access panels (with direction of swing)
Projection screens
Soffits

Room numbers
Draft stops
Grid start point
Compression struts

5. Mechanical elements

   Supply grilles
   Exhaust/return grilles

6. Electrical elements

   Light fixtures
   Exit signs
   Speakers
   Beacons

7. Fire protection elements

   Sprinkler or halon heads
   Smoke detectors

8. Key plan
9. Specific notes and cross references

10. Graphic scale

11. Finish ceiling elevation

    The above items shall be separated on various CAD layers according to Appendix D, CAD Drawing Standards.

C. FORMAT

1. Layout

   Match the Architectural Floor Plan

2. Scale

   Match the Architectural Floor Plan

3. Grid lines

   Match the Architectural Floor Plan

4. Dimensions

   Dimensions shall not be shown unless required for specialized details.

5. Sheet title

   Use the terminology “Reflected Ceiling Plan”.

D. SPECIFIC INFORMATION

1. Ceiling elevation

   Ceiling elevations shall be stated on the drawing below the room number.

2. Graphics

   Floor plan and ceiling grid shall be drawn or screened on the back of the drawing with all architectural, mechanical, electrical, and fire protection elements drawn on the front of the drawing (not applicable for CAD generated drawings).

   Screened floor plans and ceiling grid shall be made available to other design disciplines when requested.

11.3.6 Roof Plan

A. PURPOSE

To define the roof outline, exposed equipment, penetrations, and detailing for coordination between disciplines.

B. CONTENT

To include but not limited to:

1. Parapets, overhangs, screens
2. Roofing materials, walkways
3. Slopes, diverters, crickets, expansion joints
4. Flashing, gutters, downspouts, overflows, scuppers, drains
5. Hatches, skylights, vents
6. Equipment supports, curbs
7. Roof mounted equipment, ducts, pipes
8. Specific notes and cross references
9. Graphic scale
10. Key plan with north arrow

The above items shall be separated on various CAD layers according to Appendix D, CAD Drawing Standards.

C. FORMAT

1. Layout

   a. Match the Architectural Floor Plan for orientation and location.

   b. Roof plan shall be identified with alpha indicators for cross referencing.

   c. Notes shall be located to the right of the building outline between the roof plan and below the legend information. If space is inadequate, then they shall be located on the first available floor plan, and cross referenced on both plans.

2. Scale

   a. Standard scale shall be 1/4 inch = 1 foot - 0 inch.

b. Use of 1/8 inch = 1 foot - 0 inch is allowed when complexity or dimensional control allows. Refer to Appendix D, CAD Drawing Standards.

3. Grid lines

Provide grid lines at all major structural grids. Match Architectural Floor Plan.

4. Dimensions

a. Provide one level of dimensions as required.

b. Miscellaneous dimensions

All miscellaneous dimensions shall be off the grid line.

c. Do not repeat specific dimensions from the Architectural Floor Plan. Show each dimension only once.

5. Sheet title

Use the terminology “Roof Plan.”

11.3.7 Architectural Exterior Elevations

A. PURPOSE

To define the vertical elevation graphically while showing finish materials and architectural elements of the facility.

B. CONTENT

1. Exterior walls windows, doors, louvers.

2. Exposed structural elements, expansion and control joints, and exterior walls.

3. Accessory elements (scuppers, drains, lights, signage, coping, trim, etc.)

4. Elevations at top of floor, top of parapet, top of roof screen and to other vertical elements not dimensioned on sections or given elevations on plans.

5. Specific notes and cross references

6. Graphic scale

7. Finish grade lines

8. Screening elements

9. Detail and section references (only when not shown on plans and sections).

10. Roof mounted equipment

The above items shall be separated on various CAD layers according to Appendix D, CAD Drawing Standards.

C. FORMAT

1. Layout

   a. Drawings shall be placed top to bottom (or right to left if space permits) in the following order: N, E, S, and then W.

   b. Elevations shall be labeled with alpha indications for cross referencing.

   c. Elevations shall be individually titled “North Elevation, East Elevation”, etc.

   d. General notes shall be located to the right of the building elevations between the elevations and the legend information or below the elevations.

2. Scale

   a. Standard scale shall be 1/8 inch = 1 foot - 0 inch. Use of 1/4 inch = 1 foot - 0 inch is acceptable to match the floor plan.

   b. When the entire 1/8 inch scale elevations cannot fit into one sheet, a smaller scale elevation shall be drawn at the same scale as the Architectural Coordination Floor Plan.

3. Grid lines

   Grid lines are not required on elevations.

4. Dimensions

   a. Dimensioning is not required unless dictated for clarity, or for items not shown in other locations.

   b. State elevations at top of major elements or parapets, to include items such as screening. Do not dimension.

5. Sheet title

   Use the terminology “Exterior Elevation(s)”.

D. SPECIFIC INFORMATION

Graphics

1. Do not use material indications unless the pattern is compatible with CAD translation entities per Appendix D. If used, start material indications at building corners. Only show material that can be seen, then graphically fade them out.

2. Graphically show grade level with a heavy solid line. Show below grade rooms as dashed lines. Do not show footings and foundations.

3. Do not show items hidden within the walls. Do not show accessory items in front of elevation or behind roof screens such as fences or equipment unless required for planning approval (i.e., Equipment Screening). When verification of screening is required, show equipment as dashed or hidden lines, and state maximum elevation.

4. Limit material or item designations and notes to one elevation per drawing.

11.3.8 Sections

A. PURPOSE

To provide accurate construction information defining specific horizontal and vertical relationships at locations which present the most typical or unique situation being presented. Required for coordination purposes, or where control is required to achieve design intent.

B. CONTENT

1. Building sections

To include but not limited to:

Volume/space relationships
Exterior/interior profile (shell, walls, floors, ceilings, roof, shafts screening elements)
Structural assemblies including all columns, slabs, beams, trusses, foundation
Exterior elevations if required due to offsets not shown on elevations
Wall section references
Detail references not shown on wall sections
Elevations, datum points
Grid line, column indicators
Room identification
Roof mounted or ground level equipment

The above items shall be separated on various CAD layers according to Appendix D, CAD Drawing Standards.

2. Wall sections

To include but not limited to:

Detail references
Materials and their finishes
Attachments, fasteners, connections, intersections
Structural elements including foundation
Sealants and caulking
Penetrations
Tolerances
Dimensions, elevations, datum points
Grid lines, column indicators
Manufacturer’s information

C. FORMAT

1. Layout

a. Sections shall be identified with alpha indicators for cross referencing. Numbering sequence shall be left to right, top to bottom.

b. Maintain horizontal relationships within any section at a given point (i.e., roof, ceiling, wall, floor, foundation).

c. Sections shall be grouped by type with allowance for future sections. The following section groups may be used:

Building sections
Exterior wall sections
Corridor sections
Interior wall sections
Room sections
Stair and elevator sections
Millwork sections
Miscellaneous architectural sections

2. Scale

a.	Building sections	standard scale shall be 1/8 inch = 1 foot - 0 inch
b.	Exterior wall sections	standard scale shall be 1/2 inch = 1 foot - 0 inch
c.	Corridor sections	standard scale shall be 1/2 inch =1 foot - 0 inch
d.	Interior wall sections	standard scale shall be 1/4 inch = 1 foot - 0 inch
e.	Room sections	standard scale shall be 1/4 inch = 1 foot - 0 inch
f.	Stair and elevator sections	standard scale shall be 1/4 inch = 1 foot - 0 inch
g.	Millwork sections	standard scale shall be 3 inch = 1 foot - 0 inch
h.	Miscellaneous architectural sections	standard scale shall be 3 inch = 1 foot - 0 inch

3. Grid lines

a. Provide reference grid lines with column indicators for all sections.

b. Do not provide a reference grid line when the section is “typical”, and does not relate to a specific grid line.

4. Dimensions

a. Provide elevations at all major vertical offsets, and maximum building elevation. Provide all datum points. Provide two levels of dimensions, on the left side for all wall sections:
Dimensions to datum points shown on wall sections
Miscellaneous dimensions

b. Do not repeat specific dimensions from plans, sections, or other details. Show each dimension only once. Where several details on one drawing show the same elements, dimension the repetitive elements on only one detail and refer to it on the other details. Do not dimension material thicknesses unless required for clarity.

5. Sheet title

Use the terminology “Architectural Building Section” and “Architectural Sections.”

D. SPECIFIC INFORMATION

Graphics

1. The heaviest weight line shall outline the “cut” portion of the detail.

2. Do not shade or poche the section.

3. Material/note indications shown with the use of an arrow shall be with a straight line from the note (then angled if required due to material location or text).

4. Graphic material indications shall be only at corners, edges, or at intersections of materials. Use material indications compatible with translation requirements per Appendix D.

11.3.9 Details

A. PURPOSE

To provide accurate construction information defining the specific relationship between materials, showing connections, and tolerances. Required for coordination purposes, or where control is required to achieve design intent.

B. CONTENT

To include but not limited to:

Materials and their finishes
Attachments, fasteners, connections, intersections
Sealants and caulking
Penetrations
Tolerances
Dimensions, datum points
Grid lines, column indicators
Manufacturer’s information

C. FORMAT

1. Layout

a. Details shall be identified with numeric indicators for cross referencing.

b. Numbering sequence shall be top to bottom, left to right.

c. Logically arrange the details with respect to their physical location (i.e., head, jamb, sill, coping, wall, foundation). Details shall be aligned to a common horizontal and vertical grid lines and dimension points to relate the detail back to the plans and sections from which they are referenced. Details shall be grouped by type with allowance for future details. The following detail groups may be used:

Walls, floors, ceilings
Doors
Windows

Stairs and elevators
Roof flashing and accessories
Signage
Millwork
Miscellaneous architectural details

2. Scale

a. Standard scale shall be 3 inch = 1 foot - 0 inch.

b. 3/4 inch = 1 foot - 0 inch shall be established as the minimum scale allowed with 1-1/2 inch = 1 foot - 0 inch as the preferred minimum.

c. Larger scale (i.e., full size) is allowed when required due to the complexity of the detail.

3. Grid lines

a. Provide reference grid lines when detail is taken through an established grid line (i.e., exterior wall or column).

b. Do not provide a reference grid line when the detail is “typical”, and does not relate to a specific grid line.

4. Dimensions

a. Provide two levels of dimensions, at the top, and the left side.

Overall dimension
Miscellaneous dimensions

b. Do not repeat specific dimensions from plans, sections, or other details. Show each dimension only once. Where several details on one drawing show the same elements, dimension the repetitive elements on only one detail and refer to it on the other details. Do not dimension material thicknesses unless required for clarity or modification.

5. Sheet title

Use the terminology “Architectural Details”.

D. SPECIFIC INFORMATION

1. Detail types

Any of the main types of details may be used to best define the function, scope, design intent, scale, and construction of the details:

Sections
Partial plans details
Partial plan sections
Isometric details
Diagrams

2. LMSSC standard details

a. LMSSC standard details shall be used to ensure common construction methods and detailing between past, present and future projects at LMSSC facilities. They also serve as LMSSC's minimum design requirements when items are detailed beyond common construction standard.

b. LMSSC standard details shall be placed on a detail drawing rather than referencing the detail to the specifications. Thus, modifications showing actual conditions may be shown, and the actual detail used be as "as-built" at the completion of the project.

Remove "A size" sheet title block information from the detail prior to transferring the detail to the E size detail drawing. All cross referencing shall be to the numeric identification and the drawing. All cross referencing shall be to the numeric identification and the drawing number rather than the V2-XXX number. Note that policies of cities vary as to whether and how details may be incorporated in the specifications.

c. An acceptable alternate procedure is to issue unmodified standard details on a temporary drawing, or with the supplemental specifications. Note that policies of cities vary as to whether and how details may be incorporated in the specifications. In this case, the V2-XXX number with revision number of the Standard Detail shall be referenced on the drawing.

3. Graphics

a. The heaviest weight line shall outline the "cut" portion of the detail.

b. Do not shade or poche the detail as it later makes it difficult to scan the drawing into CAD.

c. Material/note indications shown with the use of an arrow shall be with a straight line from the note (then angled if required due to material location or text).

d. Graphic material indications shall be only at corners, edges, or at intersections of materials.

11.3.10 Architectural Interior Elevations

A. PURPOSE

To define the vertical elevation graphically while showing finish materials and architectural elements of interior walls which are not shown or located on floor plans or schedules.

B. CONTENT

To include but not limited to:

1. Interior walls

2. Exposed structural elements, expansion and control joints

3. Architectural

Restroom hardware and accessories

Casework
Graphics
Signage
Doors, windows, access panels
Finish materials

4. Mechanical elements

Drinking fountains
Plumbing fixtures
Diffusers and grilles

5. Electrical elements

Panel boards
Specialty lighting
Audio visual equipment

6. Vertical elevations (changes in finish, materials not shown on plans)

7. Specific notes and cross references

8. Graphic scale

9. Detail and section references (only when not shown on plans and sections)

C. FORMAT

1. Layout

a. Drawings shall be placed left to right, top to bottom in the following order: N, E, S, then W. All four walls need not be shown. Sequence shall be by groupings (toilet room, conference rooms, etc.) then by room number.

b. Elevations shall be labeled with alpha indications for cross referencing. Elevations per room shall be drawn using only one detail number.

c. Elevations shall be identified by room number and name, then sub-identified by north, east, south, and west, in the lower right hand corner of the elevation.

d. General notes shall be located to the right of the elevations between the elevations and the legend information, or below the elevations.

2. Scale

a. Standard scale shall be 1/8 inch = 1 foot - 0 inch. 1/4 inch = 1 foot - 0 inch may be used to match the floor plan.

b. 1/4 inch = 1 foot - 0 inch when complexity or dimensional control is required, such as Restrooms.

3. Grid lines

Grid lines are not required unless dictated for clarity, for items not shown in other locations, such as changes in finish material, and on scheduled wall mounted accessories.

4. Sheet title

Use the terminology “Interior Elevation(s).” When drawings are grouped by type, indicate the drawing by grouping such as “Toilet Room Elevations, Conference Room Elevations, and Corridor Elevations.”

D. SPECIFIC INFORMATION

1. Graphics

a. Start material indications at elevation or material corners. Only show material that can be seen, then graphically fade out.

b. Do not show items hidden within walls. Do not show accessory items in front of elevation such as landscape partitions or restroom partition doors.

c. Limit material or item designations and notes to one elevation per drawing.

d. Show the profile of abutting elements such as casework.

11.3.11 Schedules

A. PURPOSE

To display information on repetitive complex items of construction in a tabular format for coordination and standardization. There shall be only one schedule of each type for each building, to be updated on a project by project basis.

B. CONTENT

1. Door and frame schedule:

a. Not used. Refer to door number symbols in Construction Specifications.

2. Window schedule

Elevation of typical windows to include:

a. Window type designation
b. Window size and height above floor
c. Glazing material
d. Detail references

3. Wall type schedule to include:

a. Wall type designation
b. Construction of wall
c. Vertical termination (e.g., roof high)
d. Fire rating
e. Sound attenuation
f. Physical security features, where required

g. Radio frequency attenuation features, where required
h. Detail reference

4. Mounting height schedule

A panel of elevations showing typical wall mounted items, to include:

a. Dimension to floor
b. Mounting detail reference

C. FORMAT

1. Layout

a. Window schedule

Provide an elevation of each typical window at 1/4 inch = 1 foot - 0 inch, showing the window in relation to the floor line, frame thickness, and window operation indication.

11.3.12 Finish Plan

A. PURPOSE

To identify which surfaces interior finishes shall be applied to, to list finishes and specify application.

B. CONTENT

1. To include but not limited to:

a. Permanent walls, curtains, partitions
b. Doors, windows, louvers
c. Room numbers
d. Stairs, elevators, ramps, ladders
e. Key plan with north arrow
f. Flooring extent, patterns, and graphic indications
g. Casework, shelves
h. Stationary equipment, cabinets, pipes and other accessories
i. Schedule of finishes
j. Notes

C. FORMAT

1. Layout

Match the Architectural Floor Plan.

2. Sheet title

Use terminology “Interior Finish Plan”.

11.4 STRUCTURAL DRAWING STANDARDS

11.4.1 General Requirements

Unless otherwise specified, all drawings shall conform to the following guidelines where applicable.

A. The drawings shall be complete in the general layout and shall show all details necessary for complete understanding of the work.

B. Sufficient views and details shall be shown for clarity of information for construction. Unnecessary and excessive detailing shall be avoided.

C. Standard details of the LMSSC Facility Engineering Construction Specifications shall be utilized to the fullest extent. Any deviation shall have prior approval from LMSSC.

D. LMSSC standard legend, symbols and abbreviations shall be used whenever possible.

E. All plans shall be drawn using 1/4 inch scale. The 1/8 inch scale shall be implemented only when 1/4 inch scale proves impractical or ineffective. LMSSC approval is required when 1/8 inch scale is to be used.

F. Identify all secured area walls, floors, ceiling and roof boundaries and other security requirements on the drawings.

G. All electrical, mechanical, civil and architectural drawings related to structural work shall be cross-referenced to all structural drawings involved.

H. Demolition work shall be presented on separate drawing sheets. No demolition and new design work shall be shown on the same drawing sheet.

I. Follow all layering guidelines as required per Appendix D, CAD Drawing Standards.

J. Follow all format requirements as listed for various types of drawings listed in Section 11.3, Architectural Drawing Standards.

11.4.2 Types of Drawings Required

Generally, structural design drawings shall include but not be limited to the following as required. The list shown below does not necessarily represent the required number of drawings, but rather it should be used as a guide to meet LMSSC minimum design requirements:

1. Typical Details and General Notes

2. Foundation and Ground Floor Plan

3. Anchor Bolt Setting Plan

4. Foundation Details

5. Mezzanine Floor Framing Plan

6. Second Floor Framing Plan

7. Third Floor Framing Plan

8. Roof Framing Plan
9. Roof Bottom Chord Framing Plan
10. Truss Elevations
11. Framing Elevations
12. Column Schedule
13. Connection Details
14. Precast Concrete Wall Elevations
15. Precast Concrete Wall Connection Details
16. Miscellaneous Structures - Plans, Sections and Details
17. Miscellaneous Foundations - Plans, Sections and Details

11.5 MECHANICAL DRAWING STANDARDS

11.5.1 General Requirements

Unless otherwise specified, all drawings shall conform to the following guidelines where applicable.

A. The drawings shall be complete in the general layout of duct work and piping systems and shall show all details necessary for complete understanding of the work.

B. Sufficient views and details shall be shown for clarity of information for construction. Unnecessary and excessive detailing shall be avoided.

C. Standard details of the LMSSC FES Construction Specifications shall be utilized to the fullest extent. Any deviation shall have prior approval from LMSSC.

D. LMSSC standard legend, symbols and abbreviations shall be used whenever possible.

E. All floor plans shall be drawn using 1/4 inch scale. The 1/8 inch scale shall be implemented only when 1/4 inch scale proves impractical or ineffective. Lockheed approval is required when 1/8 inch scale is to be used.

E. “Double line” drafting of ductwork shall be exercised at all times.

F. At each supply diffuser indicate the CFM and the unit supplying the diffuser, per V3-1 sheet 2 of 4.

G. Draw all piping in medium weight lines. Use of “double lines” shall be avoided unless required for clarification of a detail or section.

H. The chilled, hot water, condenser water, process cooling water, and refrigerant lines shall be part of the mechanical (M) drawings.

I. Condensate drains and air systems shall be part of the plumbing (P) drawings. Identify blow down/discharge points.

J. Fire protection systems shall be part of the fire protection (F) drawings.

K. All mechanical equipment and description details shall be shown and specified on the drawings by means of equipment schedules.

L. Identify all fire rated walls, and secured area walls, floors and ceilings.

M. Identify all rated clean room areas.

N. Identify all secured area walls, floors, and ceiling and roof boundaries on the drawings. Note on the drawings all LMSSC security requirements.

O. Continuation of all A/C, piping and plumbing drawings and/or details shall be cross-referenced to all related drawings.

P. All building drawing backgrounds shall be drawn on the reverse side of the vellum if manually drafted. Use screening or shading for CAD drawings.

Q. All electrical, structural, civil and architectural drawings related to mechanical work shall be cross-referenced to all mechanical drawings involved.

R. Demolition work shall be presented in separate drawing sheet. No demolition and new design work shall be shown on the same drawing sheet.

S. Follow all layering guidelines as required per Appendix D, CAD Drawing Standards.

T. Follow all format requirements as listed for various types of drawings listed in Section 11.3, Architectural Drawing Standards.

11.5.2 Types of Drawings Required

Generally, design drawings shall include but not be limited to the following as required. The plans do not necessarily represent the required number of drawings but rather a guide in sequencing the drawings.

A. Mechanical HVAC

1. Title sheet (if required)

2. Legend, Symbols and Abbreviations; General Notes

3. Demolition plans

   Site Plans
   First Floor Plan
   Second Floor Plan (if applicable)
   Mechanical Room with/or Fan House Plans
   Roof Plans
   Chilled Water PFD/Process Flow Diagram
   Heating Hot Water PFD/Process Flow Diagram
   Other PFD/Process Flow Diagram

4. Equipment schedules

5. Site plan

6. Mechanical plans - HVAC

   First Floor Plan
   Second Floor Plan (if applicable)
   Mechanical Rooms with/or Fan House Plans
   Roof Plan
   Sections
   Details
   Air Flow Diagram (for complicated systems)
   Chilled Water PFD/Process Flow Diagram
   Other PFD/Process Flow Diagrams

B. Temperature control, BAS, instrumentation, HVAC, and related mechanical. Similar types of systems shall have as a minimum a set of drawings listed below. Other types of systems shall have separate sets.

   Title page of application set
   Flow diagrams (one per system)
   Ladder diagrams/communications (one per system)
   Points list and bill of materials (one per system)

Control panel layout (one per system)
Applicable details (one per set)
Applicable zone diagrams (one per system)
Floor plans with device locations, and conduit and wiring routing
Roof plans with device locations, and conduit and wiring routing
Demolition plan

C. Plumbing and Process Piping

1. Legend, Abbreviations and Symbols; General Notes; Plumbing Fixture; Piping and Equipment Schedule.

2. Demolition Plans

   First Floor Plan - Below Floor
   First Floor Plan - Above Floor
   Second Floor Plan (if applicable)
   Mechanical Rooms and Fan House Plans - Plumbing; Toilet Room Plans
   Process Piping Floor Plan
   CW and HW Riser Diagram
   Sanitary Waste and Vent Riser Diagram
   Process PFD/Process Flow Diagram
   Chemical Handling PFD/Process Flow Diagram

3. First Floor Plan - Below Floor

4. First Floor Plan - Above Floor

5. Second Floor Plan (if applicable)

6. Mechanical Rooms and Fan House Plans - Plumbing; Toilet Room Plans

7. Process Piping Floor Plan

8. Roof Plans

9. Sections

10. Details

11. CW and HW Riser Diagram

12. Sanitary Waste and Vent Riser Diagram

13. Process PFD/Process Flow Diagram

14. Chemical Handling PFD/Process Flow Diagram

15. P&ID Drawings for all Process Instrumentation

11.6 CONTROL DRAWING STANDARDS

The control drawings shall be shop drawing caliber and include the following. See LMSSC standard drawings for reference quality. AutoCAD DWG files will be provided by Cad Engineering to facilitate A/E design effort and as applicable. Miscellaneous systems not covered by LMSSC standard drawings shall comply. As a minimum, the system design shall include the following:

A. Itemized BAS point listing by Datamux input/output boards.

B. Integrated standard Staefa solid state electronic temperature controls with level's 1, 2, and 3 processing, as applicable.

C. Detailed control schematics depicting controller, sensors, controlled devices, indicators, Auxiliary Zone Panel (AZP), Auxiliary Control Panel (ACP) layout and fabrication, and ACP/datamux interface.

D. Provide in schematic form, point to point wiring showing Datamux and control panel terminal identification, temperature controllers, sensors, controlled devices, and termination and wire quantities by item.

E. Itemized material listing by Staefa product number and for miscellaneous hardware product type and quantities of same as dictated by application.

F. Provide a written sequence of operation which verbally describes and depicts operation of temperature controls/BAS interface as they pertain to each mechanical system.

G. Identify all control wiring and conduit including size and quantity.

H. Identify all equipment terminals connection points.

I. Provide a complete conduit/wiring routing plan for all control wiring, including but not be limited to: Data highway(s) sensors and devices to respective locations, interface of ACPs, datamux and other, as appropriate to the applications.

J. Provide all ACP and AZP details, panel locations and panel wiring schematics.

K. Provide all datamux arrangements, locations, wiring diagrams and details.

L. Provide schematic diagrams for all equipment.

M. Provide typical equipment installation and termination details, including notes as applicable, for all sensor, controller devices, transducers, transmitters, etc.

N. Provide a complete control valve schedule including size, configuration, part number, CV and GPM. Valve schedule shall be shown on control drawings.

O. Provide a Control/BAS legend.

P. Provide a smoke shutdown electrical schematic and interface to ADT system as specified in Section 8, Fire Protection Design Standards.

Q. Provide gas and water metering equipment and details. Show connections to electrical metering equipment through analog or pulse transducers.

R. Provide the quantification of color graphics required to represent the systems as applicable to the design. LMSSC standards for graphics will be provided for A/E review by LMSSC.

S. All devices shall be tagged by numbers and function, i.e., VAV boxes, VAV controllers, VAV sensors, etc.

Note: Items G, I, and P are to be done in conjunction with the electrical design and to be part of the electrical contract, i.e., the Electrical Contractor shall furnish and install all conduit and wire; the Control Contractor shall make all final connections.

This area intentionally left blank.

11.7 FIRE PROTECTION DRAWING STANDARDS

11.7.1 General Requirements

Unless otherwise specified, all drawings shall conform to the following guidelines where applicable.

A. The drawings shall be complete in the general layout and shall show all details necessary for complete understanding of the work.

B. Sufficient views and details shall be shown for clarity of information for construction. Unnecessary and excessive detailing shall be avoided.

C. Standard details of the LMSSC Facility Engineering Construction Specifications shall be utilized to the fullest extent. Any deviation shall have prior approval from LMSSC.

D. LMSSC standard legend, symbols and abbreviations shall be used whenever possible.

E. All plans shall be drawn using 1/4 inch scale. The 1/8 inch scale shall be implemented only when 1/4 inch scale proves impractical or ineffective. LMSSC approval is required when 1/8 inch scale to be used.

F. Draw all center lines in light weight lines.

G. Identify all secured area walls, floors, ceiling, and roof boundaries on the drawings.

H. All electrical, mechanical, civil and architectural drawings related to fire protection work shall be cross-referenced to all fire protection drawings involved.

I. Demolition work shall be presented in separate drawing sheet. No demolition and new design work shall be shown on the same drawing sheet.

J. Follow all layering guidelines as required per Appendix D, CAD Drawing Standards.

K. Follow all format requirements as listed for various types of drawings listed in Section 11.3, Architectural Drawing Standards.

11.7.2 Types of Drawings Required

A. Generally, fire protection design drawings shall include but not be limited to the following as required. The list shown does not necessarily represent the required number of drawings, but rather it should be a guideline to meet LMSSC minimum design requirements.

1. Underground fire mains
2. Fire sprinkler head locations
3. Special protection systems
4. Fire alarm control panels
5. HVAC smoke and heat detection systems

B. The fire protection design drawings shall contain applicable items to include but not be limited to:

1. Location of nozzles, heads, feed mains, grids, branch lines, risers, valving, etc., for sprinkler and special extinguishing systems.

2. Fire hose cabinet location(s)

3. Special extinguishing location and distribution area(s)

4. Fire department pit(s)

11.7.3 Working Plans

Working plans shall meet the criteria found in the appropriate National Fire Protection Association (NFPA) standards, such as Section 6.1 of NFPA #13 and Section 1.7 in NFPA #12, etc. Symbols used shall meet with the requirements of NFPA #170 unless modified by LMSSC Facility Engineering or these Design Standards.

Relocation can only be made with the approval of LMSSC Fire Protection Engineering.

This area intentionally left blank.

11.8 ELECTRICAL DRAWING STANDARDS

11.8.1 General Requirements

Unless otherwise specified, all drawings shall conform to the following guidelines where applicable.

A. The drawings shall be complete in the general layout and shall show all details necessary for complete understanding of the work.

B. Sufficient views and details shall be shown for clarity of information for construction. Unnecessary and excessive detailing shall be avoided.

C. Standard details of the LMSSC Facility Engineering Standards (FES) Construction Specifications shall be utilized to the fullest extent. Any deviation shall have prior approval from LMSSC.

D. LMSSC standard legend, symbols and abbreviations shall be used whenever possible.

E. All plans shall be drawn using 1/4 inch scale. The 1/8 inch scale shall be implemented only when 1/4 inch scale proves impractical or ineffective. LMSSC approval is required when 1/8 inch scale is to be used.

F. Draw all center lines in light weight lines.

G. Identify all secured area walls, floors, and ceiling and roof boundaries on the drawings.

H. All structural, mechanical, civil and architectural drawings related to electrical work shall be cross-referenced to all electrical drawings involved.

I. Demolition work shall be presented in separate drawing sheet. No demolition and new design work shall be shown on the same drawing sheet.

J. Follow all layering guidelines as required per Appendix D, CAD Drawing Standards.

K. Follow all format requirements as listed for various types of drawings listed in Section 11.3, Architectural Drawing Standards, as applicable.

L. All drawings are to be overlaid with the HVAC and Fire Protection drawings to identify conflicts.

11.8.2 Types of Drawings Required

Generally, electrical design drawings shall include but not be limited to the following as required. The list shown below does not necessarily represent the required number of drawings, but rather it should be used as a guide to meet LMSSC minimum design requirements:

A. Symbol List, Legend, Abbreviations, General Notes
B. Power Study
C. Title 24 Calculations
D. Lighting Level Calculations
E. Lighting Fixture Schedule
F. Panel Schedules and Loads
G. Motor Control Center Schedules and Details
H. Cable Schedules

I. Single Line Diagrams
J. Substation Layouts and Details
K. Power Plan and Detail Drawings
L. Lighting Plan and Detail Drawings
M. Grounding Layout and Detail Drawings
N. Site Underground Duct Banks and Conduits, Plans and Details
O. Mounting and Hanging Details
P. Specifications
Q. Auxiliary Systems
   Fire Alarm
   Telephone and Data Communications
   Emergency Notification System
   Parking Lot Lighting and Isolux Curves
R. Communication Plan and Details
S. Emergency Power Plan and Details

This area intentionally left blank.

11.9 SECURITY SYSTEMS DRAWING STANDARDS

11.9.1 General Requirements

Unless otherwise specified, all drawings shall conform to the following guidelines where applicable.

A. The drawings shall be complete in the general layout and shall show all details necessary for complete understanding of the work.

B. Sufficient views and details shall be shown for clarity of information for construction. Unnecessary and excessive detailing shall be avoided.

C. Standard details of the LMSSC Facility Engineering Construction Specifications shall be utilized to the fullest extent. Any deviation shall have prior approval from LMSSC.

D. LMSSC standard legend, symbols and abbreviations shall be used whenever possible.

E. All plans shall be drawn using 1/8 inch scale. The 1/16 inch scale shall be implemented only when 1/8 inch scale proves impractical or ineffective. LMSSC approval is required when 1/16 inch scale is to be used.

F. Draw all center lines in light weight lines.

G. Identify all secured area walls, floors, and ceiling and roof boundaries on the drawings.

H. All electrical, mechanical, civil and architectural drawings related to security systems work shall be cross-referenced to all security system drawings involved.

I. Demolition work shall be presented in separate drawing sheet. No demolition and new design work shall be shown on the same drawing sheet.

J. Follow all layering guidelines as required per Appendix D, CAD Drawing Standards.

K. Follow all format requirements as listed for various types of drawings listed in Section 11.3, Architectural Drawing Standards.

11.9.2 Types of Drawings Required

A. The designer shall provide Security Systems Design/Construction drawings which include, but not be limited to the following:

1. Title Sheet (if required)

2. Legend, Symbols and Abbreviations; General Notes

3. ACAS - Below Ceiling

4. ACAS - Above Ceiling

5. ACAS - Support Requirements

6. Sound Masking

7. Closed Circuit Television System

8. Security Systems Details

B. The purpose and content of each Security System Design/Construction drawing shall reflect the following criteria:

1. Legend, Symbols and Abbreviations; General Notes

a. Purpose

This drawing(s) will show Security Systems symbols, abbreviations and general notes related to the project.

b. Content

(1) ACAS Symbols per LMSSC Facility Engineering Standards (FES) Construction Specifications (CS), Engineering Construction Detail V4-46.01.

(2) Sound Masking Symbols per LMSSC FES CS, Engineering Construction Detail V4-46.40.

(3) Closed Circuit Television Symbols per LMSSC FES CS, Engineering Construction Detail V4-46.60.

(4) General descriptive and/or explanatory notes pertaining to all security systems projects.

2. ACAS - Below Ceiling

a. Purpose

This drawing(s) will show all the access control and intrusion alarm devices which will be installed below the T-bar, hardcapped, or highbay ceiling area. Each device will be provided and installed by the LMSSC designated Security Contractor.

b. Content

The LMSSC ACAS Design Group (ADG) will provide the designer with the design criteria and requirements to be included on the design/construction drawings. This will include, but not be limited to:

(1) Symbols representing each piece of equipment or device at its relative location and/or position.

(2) ACAS symbols legend keyed to specific requirements on the drawing.

3. ACAS - Above Ceiling

a. Purpose

Drawing(s) will show all intrusion alarm devices which will be provided and installed by the LMSSC designated Security Contractor above a T-bar or hardcapped ceiling area.

b. Content

The LMSSC ADG will provide the designer with design criteria and requirements to be included on the design/construction drawings. This will include, but not be limited to:

(1) Symbols representing each piece of equipment or device at its relative location and/or position.

(2) ACAS symbols legend keyed to specific requirements on the drawing.

4. ACAS - Support Requirements

a. Purpose

Drawing(s) will show those electrical related requirements which the designated Security Contractor shall provide and install in support of the ACAS Security System.

b. Content

The LMSSC ADG will provide the designer with design criteria and requirements to be included on this design/construction drawing. This will include, but not be limited to:

(1) Symbols, lines, and/or descriptions which represent wiring, conduit, power, hardware, etc.

(2) Matrix depicting the different types and amounts of required wire/cable.

(3) Wire and conduit required to support ACAS doors.

5. Sound Masking

a. Purpose

Drawing(s) will show all Sound Masking (SM) equipment, devices, and material which will be provided and installed by one of the LMSSC approved SM Security System Contractors.

b. Content

The LMSSC ADG will provide the designer with design criteria and requirements to be included on the design/construction drawings. This will include, but not be limited to:

(1) Symbols representing each piece of equipment or device at its relative location and/or position.

(2) Sound Masking symbols legend keyed to specific requirements on the drawing.

6. Closed Circuit Television System

a. Purpose

Drawing(s) will show all Closed Circuit Television System (CCTV) equipment, devices, and material which will be provided and installed by a LMSSC approved CCTV Security System Contractor.

b. Content

The LMSSC ADG will provide the designer with design criteria and requirements to be included on the design/construction drawings. This will include, but not be limited to:

(1) Symbols representing each piece of equipment or device at its relative location and/or position.

(2) CCTV symbols legend keyed to specific requirements on the drawing.

7. Security Systems Details

a. Purpose

Drawing(s) will show those standard security systems support details and information, necessary to support all security systems.

b. Content

The LMSSC ADG will provide the designer with design details, drawings, criteria and requirements to be included on the design/construction drawing(s). This will include, but not be limited to:

(1) Symbols representing each piece of equipment or device and its relative location and/or position.

(2) Security systems support details.

11.10 EMERGENCY NOTIFICATION SYSTEM DRAWING STANDARDS

11.10.1 General Requirements

Unless otherwise specified, all drawings shall conform to the following guidelines where applicable.

A. The drawings shall be complete in the general layout and shall show all details necessary for complete understanding of the work.

B. Sufficient views and details shall be shown for clarity of information for construction. Unnecessary and excessive detailing shall be avoided.

C. Standard details of the LMSSC Facility Engineering Construction Specifications shall be utilized to the fullest extent. Any deviation shall have prior approval from LMSSC.

D. LMSSC standard legend, symbols and abbreviations shall be used whenever possible.

E. All plans shall be drawn using 1/8 inch scale. The 1/16 inch scale shall be implemented only when 1/8 inch scale proves impractical or ineffective. LMSSC approval is required when 1/16 inch scale is to be used.

F. Draw all center lines in light weight lines.

G. Identify all secured area walls, floors, ceiling and roof boundaries on the drawings.

H. All electrical, mechanical, civil and architectural drawings related to Emergency Notification System (ENS) work shall be cross-referenced to all ENS drawings involved.

I. Demolition work shall be presented in separate drawing sheet. No demolition and new design work shall be shown on the same drawing sheet.

J. Follow all layering guidelines as required per Appendix D, CAD Drawing Standards.

K. Follow all format requirements as listed for various types of drawings listed in Section 11.3, Architectural Drawing Standards.

11.10.2 Types of Drawings Required

Generally, ENS design drawings shall include but not be limited to the following as required. The list shown below does not necessarily represent the required number of drawings, but rather it should be used as a guide to meet LMSSC minimum design requirements:

A. Symbol List, Legend, Abbreviations, General Notes

B. Emergency Notification System

C. Power Plan, Grounding Layout and Detail Drawings.

FIGURE 11.1

DRAWING SHEET SIZES

The following sizes shall constitute the standard facility drawing sheet sizes for both vellums and CAD output:

SHEET SIZE	VELLUM DIMENSIONS
A	8-1/2 inch x 11 inch
B	11 inch x 17 inch
C	17 inch x 22 inch
D	22 inch x 34 inch
E	34 inch x 44 inch
J*	34 inch x __ inch

*Requires supervisor's written approval. Sheet size will be evaluated on a case by case, as needed.

BORDER SIZES

The following sizes shall constitute the standard facility drawing sheet border sizes for both vellums and CAD output:

		EDGE			
SHEET SIZE	BORDER DIMENSIONS	TOP	BOTTOM	LEFT	RIGHT
A	7-1/2 inch x 10-1/4 inch	3/8 inch	3/8 inch	1/2 inch	1/2 inch
B	10-1/4 inch x 16 inch	3/8 inch	3/8 inch	1/2 inch	1/2 inch
C	16 inch x 21 inch	1/2 inch	1/2 inch	1/2 inch	1/2 inch
D	21 inch x 33 inch	1/2 inch	1/2 inch	1/2 inch	1/2 inch
E	33 inch x 43 inch	1/2 inch	1/2 inch	1/2 inch	1/2 inch
J*	34 inch x __ inch	1/2 inch	1/2 inch	1/2 inch	1/2 inch

*Sheet size will be evaluated case by case, as needed.

FIGURE 11.5

General Drawing Format

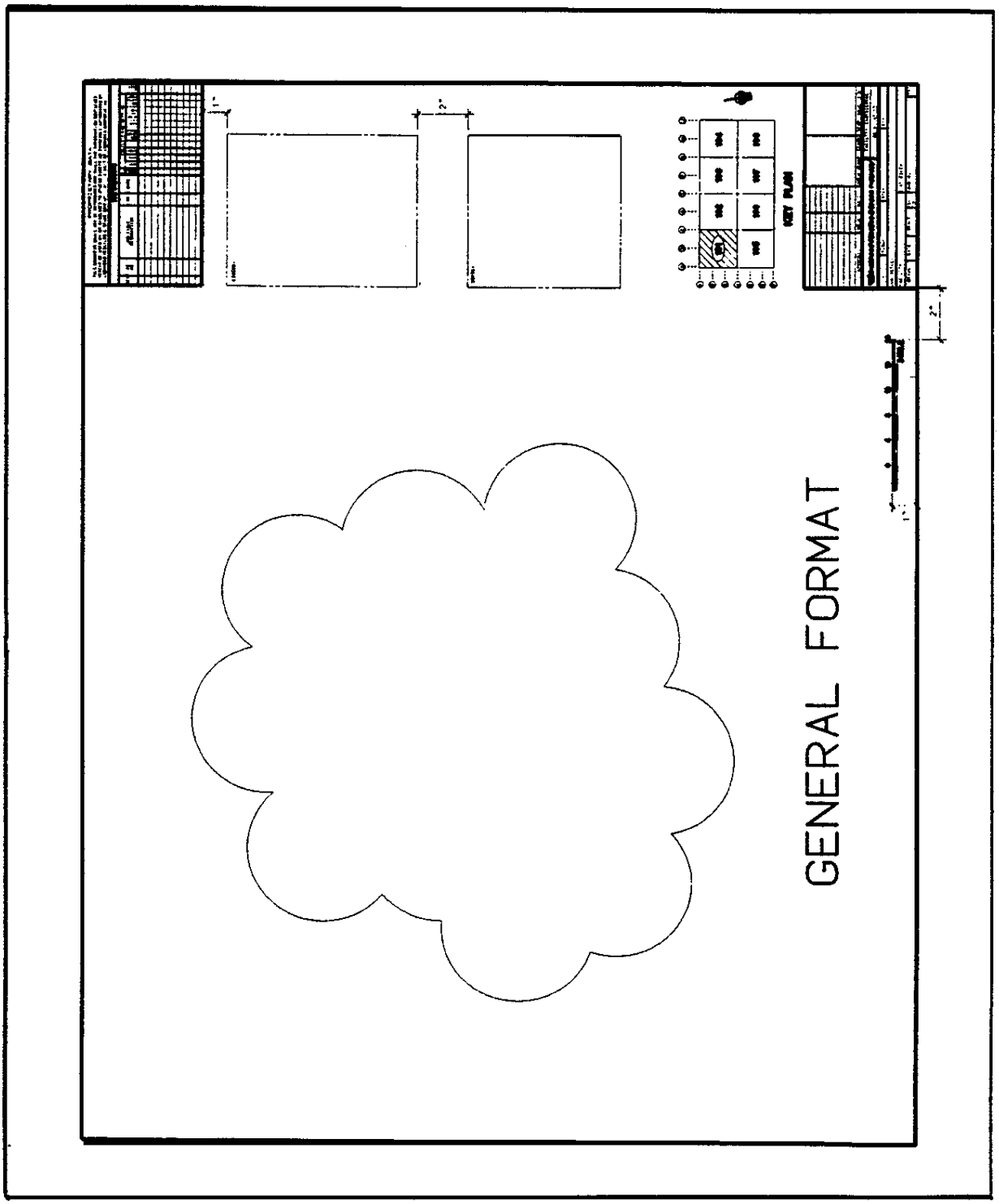

FIGURE 11.5A

Standard Navy Drawing Format

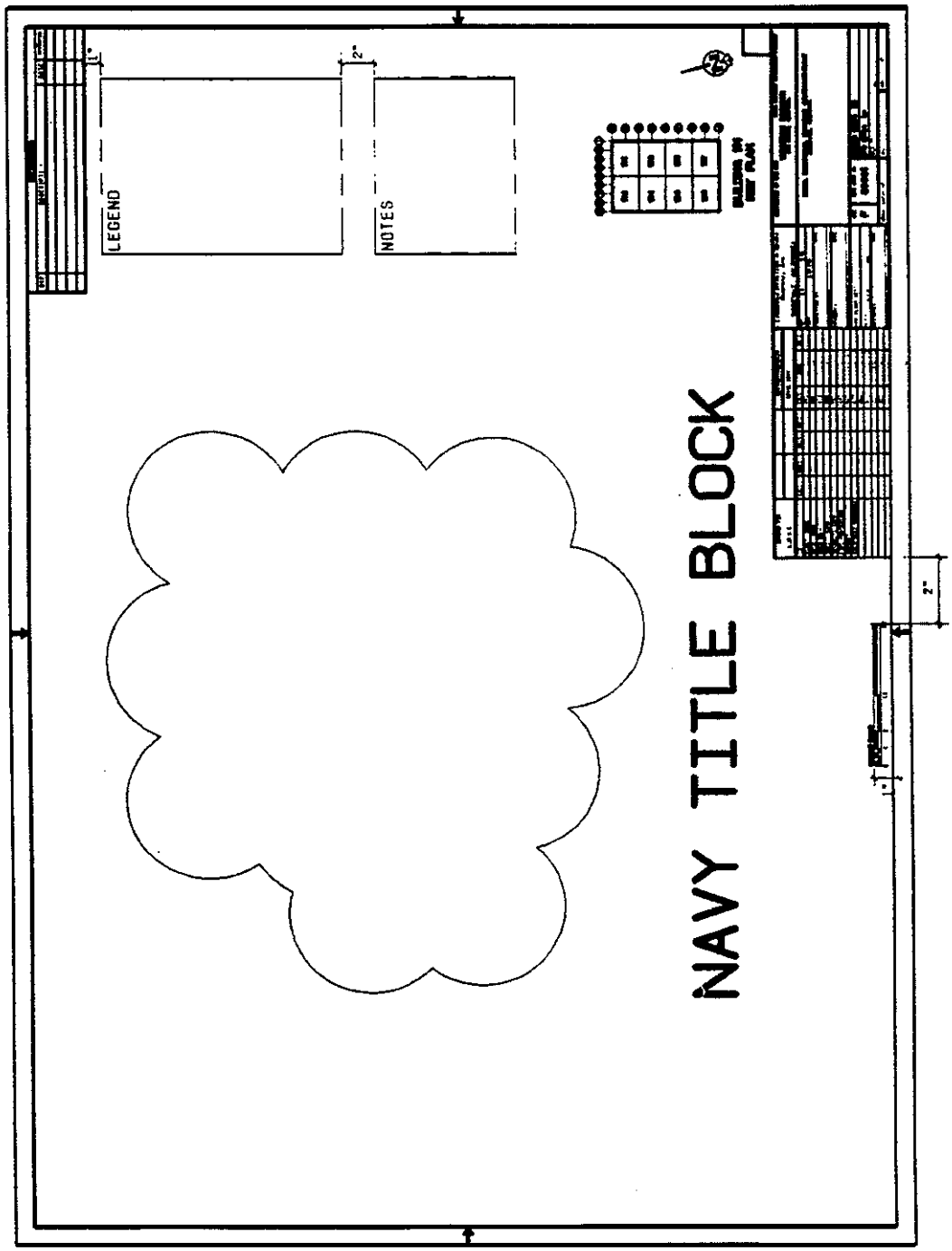

FIGURE 11.6

Standard Cover Sheet

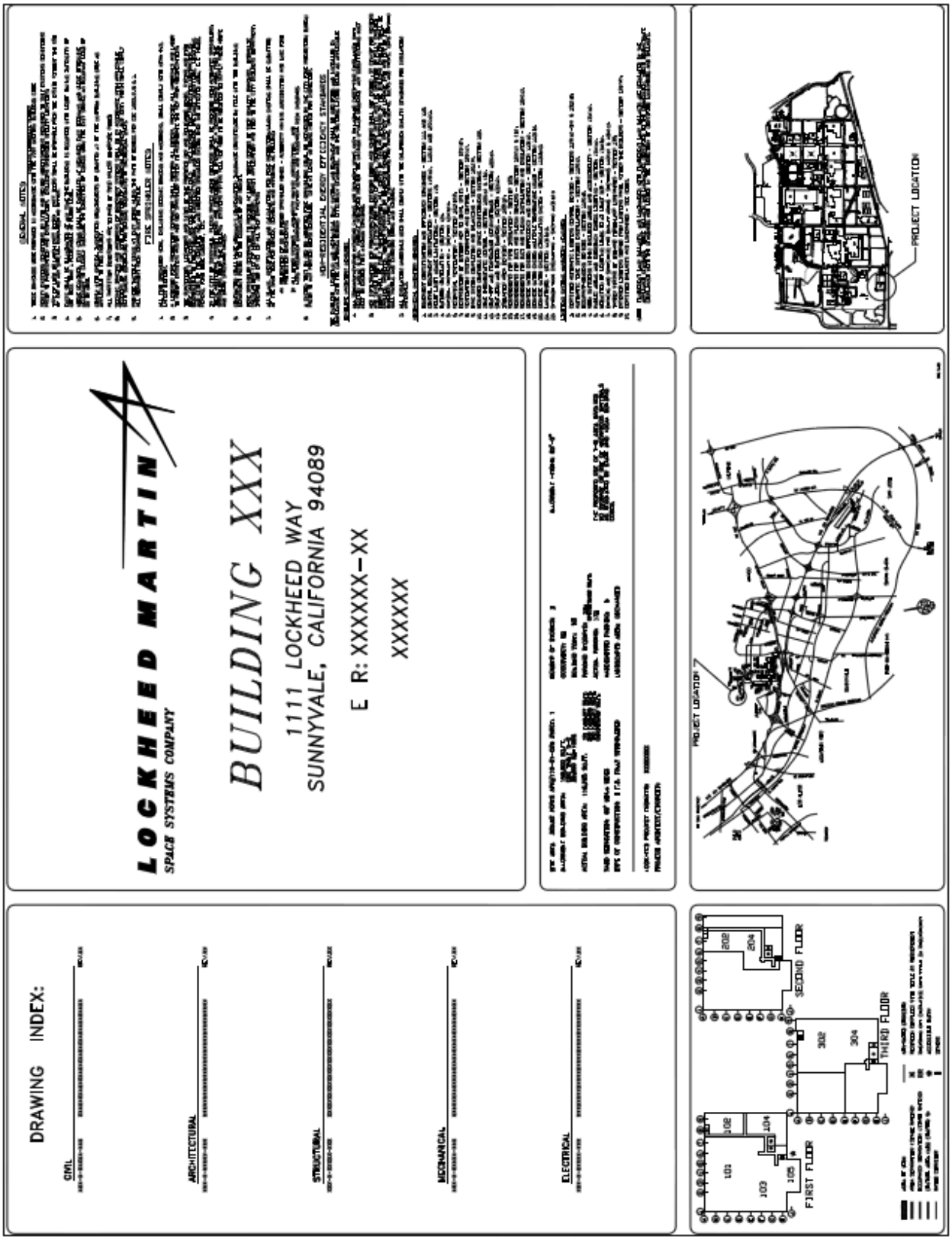

STANDARD TITLE BLOCK FOR LMSSC DRAWING
ITEMIZED DESCRIPTION FOR REQUIRED INPUT

Figures 11.7 shows standard title block to be used on all LMSSC facility drawings.

The illustrations contain numbers at each of the locations that must hold information. The following is an explanation of what information must be filled in at each of these locations.

1. Space allocated for pre-company name and logo. Lockheed Martin Space Systems.
2. Enter building number.
3. Enter floor number(s)
4. Enter building area. Note: The building area shall be cross-hatched on key plan.
5. Enter Expenditure Request (ER) number, or Facility Modification Request number (FMR) including suffix, i.e., C12345-01.
6. Enter drawing type, refer to Appendix D for samples of Design and Industrial Engineer's drawing types.
7. Ensure that city and state denoted here, reflect the actual site location of the proposed project, i.e., Sunnyvale, CA, Huntsville, AL, etc.
8. Enter drawing originator's initials or first initial and last name if space allows.
9. Enter the date that the drawing was originally prepared.
10. Enter scale at which original drawing was prepared, i.e., 1/4 inch = 1 foot - 0 inch, 1/8 inch = 1 foot - 0 inch, etc.
11. If drawing is part of a set, enter the appropriate sheet number.
12. Enter the appropriate drawing number. See Appendix D, Figure 1.1.
13. Revision number assigned each time the drawing is revised for a particular job. During design - Rev. A, B, C, etc. Issued for Bid - Rev. 0, Rev. 1, Rev. 2, etc.
14. Enter CAD file number. See Appendix D.
15. Numerical denomination of organization which prepared the subject drawing. Verify with Cad Engineering.
16. Name of LMSSC organization which prepared the subject drawing, Verify with Cad Engineering.
17. Spaces reserved for approval signatures.
18. Spaces reserved for organization numbers of respective approval personnel.
19. Spaces reserved for dating the drawings at the time of approval by respective personnel.
20. A temporary drawing number assigned by the responsible designer (i.e., A-1, M-2, etc.), for the purpose of assembling the completed set of drawings.
21. After the drawings are 100% completed and prior to submitting them for a building permit, the responsible licensed architect/engineer must affix their wet stamp and signature onto copies of the original.

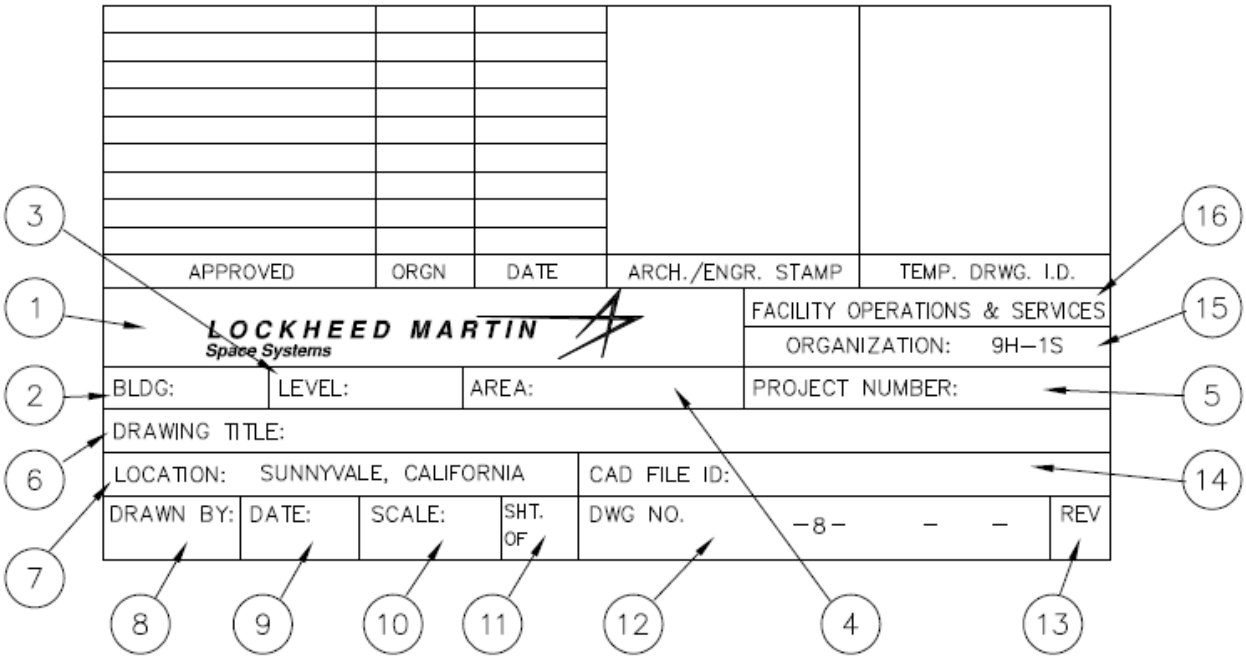

Figure 11.7

STANDARD REVISION BLOCK FOR LMSSC DRAWINGS
ITEMIZED DESCRIPTION FOR REQUIRED INPUT

Figure 11.8 shows standard revision block to be used for all LMSSC drawings.

The illustrations contain numbers at each of the locations that must hold information. The following is an explanation of what information must be filled in at each of these locations.

1. Enter the next appropriate revision number (1, 2, 3, etc.). Also, enter the same number in REV. square in Title Block.
2. Enter the LMSSC project number, including suffix, that the revision is being prepared under, i.e., C23456-01.
3. Enter project title or a brief description of revision, i.e., revised Haworth partitions, or added (2) 10 x 12 offices, or relocated lights, etc.
4. Enter name of engineer or A/E firm that originated this revision.
5. Enter the date of the revision.
6. Obtain and enter the Permit number (if applicable).
7. Obtain necessary revision approval initials
8. *Obtain and enter the CAD Control Number (contact LMSSC-Cad Engineering)*

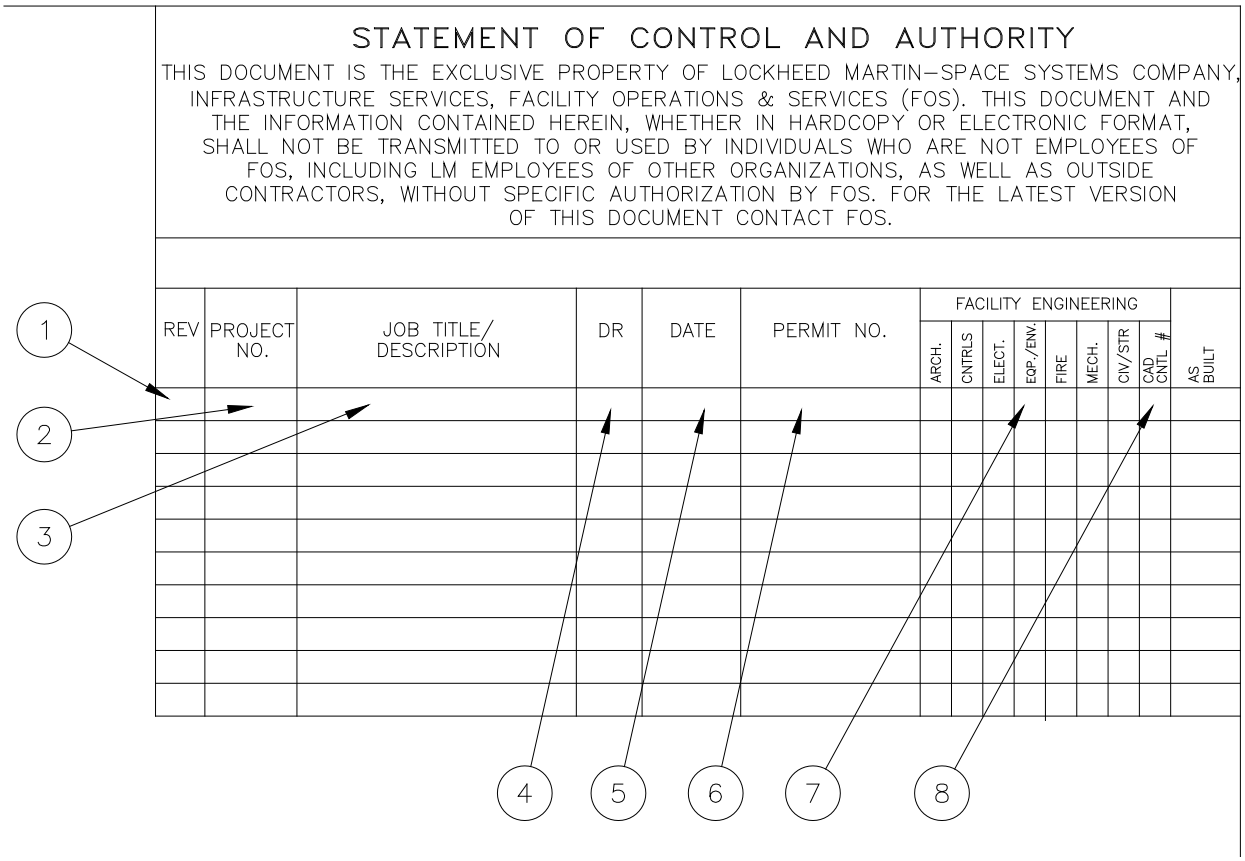

FIGURE 11.8

NOTE: On face of drawing (image), “cloud” the affected areas auditing a delta with revision number, at all locations, per Figure 11.9.,

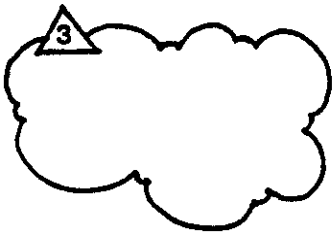

FIGURE 11.9

SECTION 12

INTERIOR DEVELOPMENT DESIGN STANDARDS

SECTION 12 IS UNDER REVISION. CONSULT MIKE DOOLEY AND JOAN FERRIN-PANN FOR MORE INFORMATION.

SECTION 13
ENVIRONMENTAL DESIGN STANDARDS

13.1 GENERAL

13.1.1 Correlation and Coordination

A. This section provides standards for the Environmental design work. These design standards shall correlate with the current edition of Lockheed Martin Space Systems Co. (LMSSC) Facility Support & Operations Standards (FS&O), Construction Specifications Volumes I through IV, and other relevant sections of this Facility Design Standards. Where applicable, the Engineering Construction Details delineated in the FS&O Construction Specifications shall be used for compatibility to LMSSC existing facilities design.

B. The Environmental design work shall be designated under the current Construction Specifications Institute (CSI) format.

C. The design shall be fully coordinated with other related architectural and engineering disciplines to eliminate conflicts and omissions, and to ensure that the total project requirements are met. Prudent judgment must be exercised in collaborating design solutions with LMSSC organizations and personnel.

D. All design/construction drawings shall follow LMSSC drawing procedures and standards, unless specifically described otherwise in specific Sections of this Facility Design Standards. Refer to Section 11, Drawing Procedures for all drawing requirements.

13.1.2 Design Philosophy

The design shall be done in a manner to assure that the maximum benefit is obtained for the costs expended. Safety, quality, reliability, and maintainability shall not be compromised as a cost saving measure.

Incorporation of energy-saving and pollution-reducing measures, including pursuit of LEED Silver certification, is encouraged and may be required; consult with LMSSC project manager. Refer to specification section 01 81 13 for specific LEED requirements.

The methods of analysis and design shall follow the established principles of professional work.

13.1.3 Codes and Standards

Design work shall comply with the current adopted edition of all applicable city, county, state and federal codes and standards. In addition, the current adopted edition of the following codes, standards and publications, are considered as the governing references to this section. Applicable recommendations of related trade and professional associations not listed here shall also be followed. Specific codes and standards will be listed in each subsection. The following is a list of abbreviations, agencies, and organizations referenced in these sections:

AAL	Applied Action Levels
ANSI	American National Standards Institute
AQMD	Air Quality Management District

ARAR	Applicable, Relevant and Appropriate Regulations
ASME	American Society of Mechanical Engineers
ASTM	American Society for Testing and Materials
BACT	Best Available Control Technology
BAAQMD	Bay Area Air Quality Management District
BCDC	Bay Conservation and Development Commission
Cal-OSHA	California Occupational Safety and Health Administration
CEM	Continuous Emissions Monitoring
CCR	California Code of Regulation
CERCLA	Comprehensive Environmental Response, Compensation, and Liability Act of 1980
CFM	Cubic Feet per Minute
CFR	Code of Federal Regulations
DC	Direct Current
DHEW	Department of Health, Education and Welfare
DHS	Department of Health Services
DOHS	California Department of Health Services
DOT	U.S. Department of Transportation
DWR	California Department of Water Resources
EC	Electric Conductivity
EIS	Environmental Impact Statement
EPA	Environmental Protection Agency
EPA-NPL	Environmental Protection Agency-National Priority List
FRP	Fiberglass Reinforced Plastic
GAC	Granular Activated Carbon
HCI	Hydrochloric Acid
HCN	Hydrocyanic Acid
HOA	Hand-Off-Auto
HS/SS	Hand-Switch/Start Stop
IEEE	Institute of Electrical and Electronics Engineers
LED	Light Emitting Diode
LEED	Leadership in Energy and Environmental Design, US Green Building Council
LUFT	Leaking Underground Fuel Tank
mA	Milliamperes
MCL	Maximum Contaminant Level
MOP	Manual of Procedures
MSDS	Material Safety Data Sheets
NCP	National Contingency Plan
NEC	National Electrical Code
NEMA	National Electrical Manufacturing Association
NESHAPS	National Emissions Standards for Hazardous Air Pollutants
NFPA	National Fire Protection Association
NIOSH	National Institute of Occupational Safety and Health
NPDES	National Pollution Discharge Elimination System
NSPS	New Source Performance Standards
O/9K2S	Environment, Safety & Health (ESH)
ORP	Oxidation/Reduction Potential
PCB	Polychlorinated Biphenyl
PPM	Parts per Million
PVC	Polyvinyl Chloride
REA	Registered Environmental Assessor
RCRA	Resource Conservation and Recovery Act
RF	Radio Frequency
RI/FS	Remedial Investigations and Feasibility Studies
RWQCB	Regional Water Quality Control Board
SAL	State Action Limits
SCVWD	Santa Clara Valley Water District
TEGD	Technical Enforcement Guidance Document
TSCA	Toxic Substances Control Act

CBC	California Building Code
CFC	California Fire Code
UL	Underwriters Laboratories
USGS	United States Geological Survey
UST	Underground Storage Tank
VAC	Volts Alternating Current
VDC	Volts Direct Current
VOC	Volatile Organic Chemical

3.2 SOLVENT DEGREASING UNIT STANDARDS

13.2.1 Objectives

This section provides guidance for the performance requirements of BACT for solvent degreasing units. This section also defines the permitting process within LMSSC and permit considerations for solvent degreasing units.

13.2.2 Codes and Standards

All solvent degreasing units shall comply with the current adopted edition of the following codes and standards:

BAAQMD	Regulation 1, General Provisions and Definitions
BAAQMD	Regulation 2, Permits
BAAQMD	Regulation 8, Organic Compounds (Rule 2, Miscellaneous Operations, Rule 4, General Solvent and Surface Coating Operations, and Rule 16, Solvent Cleaning Operations)
BAAQMD	Manual of Procedures, Volume III, Method 13 and Volume IV, ST-7

13.2.3 Permits/Authorizations

A. The 2 types of permits/authorizations required for construction and operation of solvent cleaning units are as follows:

1. Authority to Construct

   Any person who plans to install a solvent cleaning unit shall first secure written authorization from the BAAQMD in the form of an authority to construct such a unit. When a unit is moved to another facility an Authority to Construct will be required.

2. Permit to Operate

   Any person who plans to use or operate a solvent cleaning unit shall first secure written authorization from the BAAQMD in the form of a Permit to Operate. Routine repairs or maintenance that includes replacement of components with equivalent equipment will not require a modification to a permit.

13.2.4 Compliance With BAAQMD Regulations

All cold cleaners, vapor solvent cleaners, and conveyorized solvent cleaners shall comply with BAAQMD Regulation 8 Rule 16.

13.2.5 Solvent Degreasing Unit Parameters

The solvent degreasing unit parameters of key significance for air emission control include freeboard height, freeboard ratio, and evaporation area as described below:

A. Freeboard Height

1. Cold Cleaners

   The vertical distance from the top of the evaporative area (solvent vapor-air interface) to the top of the cold cleaner.

2. Vapor Solvent Cleaner

   The vertical distance from the evaporative area (solvent vapor-air interface) to the top of the solvent cleaner.

3. Conveyorized Solvent Cleaner

   The vertical distance from the top of the evaporative area to the bottom of the lowest opening in the solvent cleaner.

B. Freeboard Ratio

The freeboard height divided by the smaller of the length or width of the solvent cleaner evaporative area.

C. Evaporative Area

1. Cold Cleaners including Conveyorized Type

   The surface area of the top of the solvent.

2. Vapor Solvent Cleaners including Conveyorized Type

   The surface area of the top of the solvent vapor-air interface.

D. New or Modified Vapor Degreasers

All new or modified vapor degreasers require BACT. See Section 13.2.10, Best Available Control Technology (BACT).

13.2.6 Air Emission Control Devices

Any solvent degreasing unit shall not operate without at least one of the following control devices:

A freeboard ratio greater than or LMSSC approved equal to 0.75.

A freeboard chiller where the chilled air blanket temperature measured in °F at the coldest point on the vertical axis in the center of the solvent cleaner shall be no greater than 30% of the initial boiling point of the solvent used or 40°F.

A BAAQMD approved emission control device with a control efficiency of 90% or more on a mass basis.

13.2.7 Air Emission Control Choices

Engineer should use a freeboard ratio greater than or equal to 0.75. For solvent cleaning units with an evaporative area greater than 7 square feet, the Engineer should use a freeboard chiller which has a minimum solvent recovery efficiency of 75%. The Engineer should use a BAAQMD approved emission control device with a control efficiency of 90% or more if determined to be required through the permit process.

13.2.8 Air Emission Collection System (If Required)

The collection system shall have a ventilation rate of 15-20 cubic meters per minute per square meter (49-65 CFM per square foot) of solvent cleaner opening unless another rate is required to meet the Cal-OSHA requirements. The system shall have one or more inlets for collection of emissions or a BAAQMD approved equivalent collection system.

13.2.9 Best Available Control Technology (BACT)

A. BACT for air emissions control of any new or modified vapor degreaser consists of the following controls:

1. A freeboard ratio greater than or equal to 1.0.

2. A vapor phase secondary chiller in which the temperature of the chilled liquid feed into the chiller coil is minus10°F during degreaser operation.

3. A cover that can be opened or closed without disturbing the vapor zone. (Rolltop covers are recommended.)

4. BACT for degreasers with a surface opening of greater than 7 square feet will be considered on an individual case basis. Please contact LMSSC ESH Program at 27661 for such cases.

13.2.10 Catalytic Oxidation

For BACT systems with exhaust emissions, the units shall meet the emissions testing requirements specified in the BAAQMD Manual of Procedures, Volume III, Method 13 and Volume IV, ST-7.

13.3 UNDERGROUND HAZARDOUS MATERIAL AND WASTE STORAGE TANKS

13.3.1 Objectives

A. Any hazardous material or waste tank which lies more than 10% below grade (including piping) is subject to underground tank requirements. The primary requirements are contained in local Hazardous Material Storage Ordinances. County, Regional Water Quality Control Board, State, and Federal Regulations also apply. Nationally recognized practices and codes apply to construction, installation, and operation. Requirements beyond the minimum satisfaction of the regulations are necessary to ensure safe and cost-effective operation.

B. Hazardous substances should be stored in aboveground facilities whenever possible. If aboveground storage is not feasible, underground storage facilities must be constructed in a manner which effectively protects the environment from leaks and spills, and which facilitates early detection of any leaks.

13.3.2 Codes and Standards

Comply with the current adopted edition of the following codes and standards listed below:

ASME	Pressure Vessel Code
ASME	Pressure Piping Code
FS&O	Section 1, Civil Design Standards, Earthwork
	Section 5, Electrical Design Standards
	Section 13.9, Soil Fill Material Quality Standards
LEED	Leadership in Energy and Environmental Design, US Green Building Council
O/47-20	Segregation requirements
	Confined space entry procedures

O/9K2S	Segregation requirements
UL 58	Steel Underground Tanks for Flammable and Combustible Liquids
UL 1316	Glass Fiber Reinforced Plastic Underground Storage Tanks for Petroleum Products
NFPA	NFPA-30, Flammable and Combustible Liquids Code
CFC	California Fire Code
Sunnyvale	Title 21, Underground Storage of Hazardous Materials
Palo Alto	Title 17, Storage of Hazardous Materials
Milpitas	Title V, Chapter 302, Hazardous Materials
San Jose	Title 17, Section 17.68, Hazardous Materials
Santa Clara	Municipal Ordinance #1604, UFC Amendments
Santa Clara	County Hazardous Materials Storage Permit Ordinance
26 CCR	Division 22, 22-66680 Hazardous Wastes and Materials
8 CCR	Cal/OSHA
California	Health and Safety Code Section 25281 Definitions, Section 25284.4 (a) Tank Testing
22 CFR	Parts 67250-67262
22 CCR	Parts 66265.190-66265.193
23 CCR	Parts 2610-2714
29 CFR	1910.106 Flammable and Combustible Liquids
	1910.176 Material Handling and Storage
40 CFR	Part 262, Generators
	Part 265, Containers and Tanks
	Part 280

13.3.3 General

A. For all new UST construction, hazardous substances shall be stored, in order of preference, in; (1) Exempt Vaulted Tanks (see below), (2) Vaulted Tanks, and (3) double walled buried tanks to provide secondary containment.

New tanks shall not use membranes or liners for secondary containment. Monitoring devices and methods must be capable of detecting the presence of product within the secondary container. For this reason, monitoring of ground water is not sufficient for leak detection in new construction.

B. Exempt Vaulted Tanks (EVTs) are tanks installed in vaults such that all exterior surfaces of the tank, including the floor directly beneath the tank and all connected piping, can be inspected by direct viewing. All EVTs must be inspected for leaks or spills each operating day by the using organization who must maintain a written log of the inspections. The vault must be constructed in accordance with local agency requirements for secondary containment (see 13.3.7), and the agency must determine that the EVT meets all applicable requirements.

C. All tank facilities shall provide adequate clearance for inspections, maintenance, and emergencies. Aisle space shall be provided around all equipment such as valves, switches, hatch covers, etc. Items which require periodic maintenance, such as pH probes, must be placed to provide easy access, removal and replacement. For the case of tanks in vaults, clearance shall be provided around equipment within the vault. Electrical equipment within vaults must meet applicable codes for clearance.

D. Overhead clearance below any roof or non-removable structure is required for maintenance and removal of tanks and equipment. Vaults must be equipped with an access ladder which meets the requirements of Cal-OSHA.

E. The area around tanks shall be provided with security fencing or other access control to prevent unauthorized entry.

F. Permits are required for operation in accordance with applicable regulations. Tanks must be added to the Hazardous Material Management Plan and Hazardous Materials Inventory after installation.

G. Notify O/9K2S, O/47-20, and O/47-30, regarding design specifications for installation of underground storage tanks. The information required as part of the notification will include: tank capacity, proposed contents, location, monitoring capabilities, cathodic protection requirements, and the type of secondary containment for the tank and piping systems.

H. All components such as special accessories, fittings, coatings or linings, monitoring systems and level controls shall bear an approval from an independent testing organization.

I. Design and installation of hazardous waste (USTs) require review and approval by a registered professional engineer in accordance with CCR 22-265.192.

13.3.4 Tanks

A. Tanks shall be constructed of product-tight materials as defined in applicable regulations. A manufacturer's certification of the suitability of the tank for the intended use is required. Hazardous waste tanks shall not be designed to contain more than 5,000 gallons or 45,000 pounds of hazardous waste. All tanks shall be tested at the factory in accordance with CCR 23-2635 (a) (1).

B. For plastic tanks, penetrations shall be two-flanged fittings with studs (donker bolts). Flanges shall be sealed with inner and outer gaskets. As an alternative, integrally molded flanged fittings shall be molded as an original part of the tank. A manufacturer's certification of the suitability of the fitting and gasket materials is required. For steel tanks, fittings shall be welded and flanged in accordance with applicable standards. Thirty inch minimum diameter man ways shall be provided for inspection and maintenance access.

C. All steel tanks shall be equipped with corrosion protection which satisfies CCR 23-2635 (a) (2).

D. Tanks shall be provided with seismic bracing per CBC Seismic Zone 4. In addition, restraints shall be provided to prevent flotation of empty tanks and tank walls shall be designed to withstand flooding of the containment. All vault penetrations and tank attachments shall provide flexibility due to differential settlement of the surrounding soil.

E. An alarm shall be provided to alert the user of the tank of a potential overfill. In the case of waste tanks, the production area using the tank should be alerted. In the case of product tanks, personnel filling the tank should be alerted. Where there is a possibility of overfill of the containment during unattended hours (at night, on weekends, during holidays, etc.) the alarm must be connected to the Service Request Center central alarm system. Tanks equipped with pumps shall be provided with low level alarms, pump shutoffs, and a means of shutting off incoming process water.

All Hazardous Waste Tanks (HWT) shall be equipped with a secondary high level alarm that is powered separately from the Service Request Center. This alarm shall be set higher than the primary high level alarm. Both alarm conditions shall cause the electrical lockout shut down of the HWT pump. In the case of chemical processing areas, both alarms also shall shutoff all incoming shop waters to prevent any possibility of overfill and spill of the HWT.

F. All tanks shall be equipped with overfill protection. Overfill protection devices shall be provided at fill pipes, made of corrosion resistant material, and be capable of holding a minimum capacity of five gallons. The devices shall consist of a containment manhole surrounding the fill pipe with sufficient size and product-tight seals to prevent discharge of the product to soils surrounding the fill pipe. The overfill protector shall provide a means by

which spilled material can drain into the primary container. Flow restrictions shall stop the flow of materials to a tank at 95% capacity should the potential for an overfill exist.

G. A level indicator shall be provided for the tank. Priority shall be placed on simple indicators that perform reliably in the application. These level indicators shall be readable locally either electronically or by mechanical means. Level indicators for hazardous waste tanks shall be connected to the Hazardous Material Operations, O/9K2S, HWT monitoring system.

H. The exterior surface of the tank shall bear a marking, code or stamp which shows the following information:

1. Engineering standard used
2. Nominal diameter in feet
3. Nominal capacity in gallons
4. Degree of secondary containment
5. Usable capacity in gallons
6. Design pressure in psig
7. Maximum operating temperature in °F
8. Construction materials
9. Year manufactured
10. Manufacturer

13.3.5 Installation

A. Hazardous material tanks shall be installed by a certified technician in accordance with CCR 23-2635(e) with documented experience in underground tank installation. Installation shall be performed in accordance with manufacturer's recommendations and in accordance with FS&O Construction Specifications, Section 1, Civil Design Standards, Earthwork. Backfill material shall meet Section 13.9, Soil Fill Material Quality standards. Tanks shall be provided with saddles and tie downs sufficient to resist flotation of the empty tank at the maximum ground water level. The tank shall be tested and inspected by a certified engineer after installation in accordance with CCR 23-2635 (a) (3-6) , the manufacturer's recommendations, and DHS requirements. The installation must be inspected and approved by the local agency responsible for UST permits.

13.3.6 Pipes and Appurtenances

A. All materials of construction shall be suitable for the intended service in accordance with applicable standards. The materials must be capable of containing the products without leakage or degradation. A process schematic shall be provided for each HWT system that includes this labeling system. Detailed procedures shall be provided that describes the operation of the HWT system.

B. Hazardous material pipes and pumps shall be provided with secondary containment. Isolation valves must be provided for all pipes. Where feasible, associated equipment may be placed within the secondary containment for tanks. Pumps must be elevated to prevent submergence. Placement of electrical equipment is governed by applicable electrical standards. Underground pressurized piping shall be equipped with automatic leak detectors which emit visual and audible alarms. When a leak is detected, the alarm system will be activated and the flow of liquid will be restricted by automatically shutting down the pumping system.

C. All piping shall be subjected to a hydrostatic test after installation in accordance with ASME Pressure Piping Code B31. (Must be 150% of design and operating pressure. Must be at least 40 psi. Test must last 30 minutes and all joints soap tested.)

D. Piping and other equipment shall be provided with appropriate supports per CBC Seismic Zone 4. Heavy equipment, valves, pumps, and other equipment subjected to loads during operation shall be supported to protect attached piping. Tanks storing organic liquids with a capacity of less than 40,000 gallons shall be equipped with a submerged fill pipe or an apparatus of equal efficiency which has been approved by the local air quality management agency.

E. If piping is in contact with backfill, corrosion protection is required as found in CCR 23-2635 (b).

13.3.7 Secondary Containment

A. Double walled tanks that meet applicable standards may be buried directly. Single walled tanks shall be installed in vaults.

B. Vaults shall be constructed of concrete in accordance with applicable standards and practices. Concrete pours shall be “monolithic”. Water-stops that are resistant to all chemicals expected to be contained in the vessel must be provided at all joints in the concrete. Interior surfaces shall be coated with a chemical-resistant coating in accordance with applicable standards. The coating must be sufficient to protect the concrete and contain spills for the period of time during which a spill may be present. (For example, a containment that is left unattended over weekends must be capable of containing a spill for 64 to 72 hours without leakage or degradation of the coating or concrete.) Coatings must be applied in accordance with the manufacturer's recommendations by a qualified technician. Non-skid coatings shall be applied to all walkways.

C. Vaults shall be sloped to allow any product leakage or water intrusion to drain to a sump. A supporting grid or other structure must allow concealed leaks to drain from beneath the tank. At grade, the vault must be covered with an FRP grating or other suitable surface. Gratings must be removable to allow convenient access to the equipment underneath.

D. All exterior paving should be sloped away from the vault to prevent run-on of rain. Designers must perform and submit calculations to ensure adequate containment volumes for tank contents, and fire sprinkler flow as required by applicable regulations.

E. Weatherproof covers shall be installed over exterior vaults to prohibit the intrusion of rain water or irrigation water.

13.3.8 Segregation

Incompatible materials may not share the same secondary containment. In general, acids, bases, neutrals, flammables, and oxidizers must be segregated from each other O/9K2S will provide information on segregation of specific materials and wastes. Containments, tanks, and equipment handling or storing incompatible materials should be separated by distance or by a non-combustible partition extending 18 inches beyond and above the equipment in accordance with the UFC.

13.3.9 Monitoring

A. Exempt vaulted tanks (EVTs) do not require automatic monitoring equipment.

B. Vaults, sumps and double-walled tanks in which visual inspection is not possible require a monitoring device capable of detecting the presence of product within the secondary containment. Double-walled tanks shall be shaped to allow leakage to drain to a collection point. A pump or other means of removing spilled material or water shall be provided. The monitoring provided must meet local regulatory agency approval.

C. Where possible, drains and automated pumps will be avoided to reduce the risk of unintentional discharge. Sump pumps and piping may be installed, but manual switches for operation are required. Procedures and contact phone numbers for spill and water removal shall be posted at the site. Any drains shall be equipped with normally closed valves and locks to prevent unauthorized use. Alarms shall be tied into the Service Request Center central alarm system where the potential for overfill during unattended hours exists.

D. For pressurized piping, secondary containment piping leak detection systems shall be designed to detect a leak of three gallons per hour at ten pounds per square inch line pressure within one hour with 95% probability.

13.3.10 Signs

All signs must be visible from safe distance and location for emergency response and from all points of normal access, in no case less than 25 feet from the area. Required signs include:

NFPA Diamond
DHS "Warning Hazardous Waste..." bilingual, for hazardous waste tanks only
Name of the material and its hazard class (on each tank)
UN/NA number (on each tank)
Capacity of the container (on each tank)
Proposition 65 Notice for all listed materials
Procedures and phone numbers for spill response
Notice prohibiting confined space entry and contact number for O/47-20
Labels and flow directions for all piping
Labels for valves and controls
Name and phone number of responsible organization
Labels for product material for all piping

13.4 ABOVEGROUND HAZARDOUS MATERIAL AND WASTE STORAGE FACILITIES AND EQUIPMENT

13.4.1 Objectives

This section provides standards for aboveground hazardous materials storage facilities. Such facilities must be constructed to meet the requirements of applicable regulations. In addition, requirements beyond the minimum necessary to satisfy hazardous material codes are necessary to ensure that the facilities are safe and convenient to operate.

13.4.2 Codes and Standards

Comply with the current adopted edition of the following codes and standards:

NFPA	NFPA -30, Flammable and Combustible Liquids Code
ASME	Pressure Piping Code
	Pressure Vessel Code
CFC	California Fire Code
LEED	Leadership in Energy and Environmental Design, US Green Building Council
O/9K2S	Segregation requirements
	Confined space entry procedures and segregation requirements
Sunnyvale	Title 20, Storage of Hazardous Materials Aboveground
San Jose	Title 17, Section 17.68, Hazardous Materials
Santa Clara	City Ordinance #1604, UFC Amendments
Santa Clara	County Hazardous Materials Storage Ordinance
California	Health and Safety Code: Section 25281 Definitions, 25284.4 (a) Tank Testing
26 CCR	Division 22, 22-66680 Hazardous Wastes and Materials
29 CFR	1910.106, Flammable and Combustible Liquids

	1910.176, Material Handling and Storage
40 CFR	Part 262, Generators
	Part 265, Containers and Tanks
FS&O	Section 5, Electrical Design Standards

13.4.3 General

A. Storage areas shall provide adequate aisle space and overhead clearance for emergency access, as well as for inspection and maintenance. Required aisles shall be marked. Sumps shall not be covered with tanks or containers. Gratings must consist of removable sections with handles for removal. Ramps shall be provided at uneven floor surfaces and at raised curbs to allow access. All facilities shall be fenced or otherwise controlled to prevent unauthorized entry.

B. Permits are required for operation in accordance with local ordinances. Tanks must be added to the Hazardous Material Management Plan and Hazardous Materials Inventory after installation.

C. Notify O/9K2S , regarding design specifications for installation of all storage tanks, hazardous material storage areas and hazardous materials handling equipment. The information required as part of the notification will include: storage capacity, proposed hazardous materials stored or used within the area, location, monitoring capabilities, cathodic protection requirements and secondary containment requirements, including containment for piping where applicable.

13.4.4 Tanks

A. Tanks shall be constructed of materials capable of containing the intended products without leakage or degradation. A manufacturer's certification of the suitability of the tank for the intended use is required. For plastic tanks, penetrations shall be two-flanged fittings with studs (donker bolts). Flanges shall be sealed with inner and outer gaskets. As an alternative, integrally molded flanged fittings shall be molded as an original part of the tank. A manufacturer's certification of the suitability of the fitting and gasket materials is required. For steel tanks, fittings shall be welded and flanged in accordance with applicable standards. Tanks and other equipment shall be provided with seismic bracing per CBC Zone 4. Tanks shall be placed on a supporting grid, or other provisions shall be made to allow concealed leaks to drain to sumps. Thirty inch minimum diameter man ways, catwalks, and stairs or ladders in accordance with Cal-OSHA standards shall be provided for inspection and maintenance. Plastic tanks shall be UV-resistant. Tanks shall have sloped bottoms to allow contents to drain to a single point.

B. An alarm shall be provided to alert the user of the tank of a potential overfill. In the case of waste tanks, the production area using the tank should be alerted. Automatic cutoff devices, flow restrictors, or dead man switches shall be used where appropriate in the case of product tanks, personnel filling the tank should be alerted. Fill connections must be placed within the area protected by the secondary containment or must be provided with an overfill protection device which provides secondary containment for overfill spills. Where there is a possibility of overfill of the containment during unattended hours (at night, on weekends, during holidays, etc.) the alarm must be connected to the Service Request Center central alarm system. Tanks must be equipped with reliable level indicators, and have provisions for shutting off incoming water. Tanks shall be tested and inspected by a certified inspector after installation in accordance with Health and Safety Code, Section 25284.4 (a), the manufacturer's recommendations and DHS requirements.

All HWT shall be equipped with a secondary high level alarm that is powered separately from the Service Request Center. This alarm shall be set higher than the primary high level alarm. Both alarm conditions shall cause the electrical lockout shut down of the HWT pump.

In the case of chemical processing areas, both alarms also shall shutoff all incoming shop waters to prevent any possibility of overfill and spill of the HWT.

These level indicators shall be readable locally either electronically or by some mechanical means. They shall also be connected to the ESH O/9K2S, HWT monitoring system.

C. All tanks, pipes, pumps and valves shall be labeled. A process schematic shall be provided for each HWT system that includes this labeling system. Detailed procedures shall be provided that describes the operation of the HWT system.

13.4.5 Pipes and Appurtenances

All materials of construction shall be capable of containing the product without leakage or degradation. All equipment should be placed within or above the secondary containment where possible. Piping outside the containment shall be double walled, and provided with a means of monitoring. Pumps and piping shall be situated to allow tanks to be emptied to the greatest extent possible. Pipes shall be equipped with flush ports. All pipes and other equipment shall be supported with corrosion-resistant hardware appropriate to the application. Pumps and other major equipment items must be placed on raised pads to prevent immersion. An isolation valve shall be placed immediately downstream of any tank connection. Isolation valves shall be provided upstream and downstream from all major equipment. All piping shall be subjected to a hydrostatic test in accordance with ASME B-31. Piping shall be painted if the pipe material is susceptible to UV-degradation. A process schematic shall be provided for each HWT system. Detailed procedures shall be provided that describes the operation of the HWT system.

13.4.6 Secondary Containment

A. Spill containment trays, spill containment pallets, chemical storage cabinets with containment, or chemical storage sheds with containment shall be used. O/9K2S or O/9H2S can provide recommended suppliers and models. If such containment units are infeasible, concrete structures may be required. Alternatively, double walled tanks may be used. For all secondary containment devices and structures, Designers shall perform and submit calculations to verify compliance with the Hazardous Material Storage Ordinances.

B. Secondary containment structures shall be constructed using concrete in accordance with applicable standards and practices. All concrete shall be “monolithic” pours wherever possible. Where drums or heavy equipment are to be moved in and out of the containment, access at grade shall be provided for forklifts. The concrete shall slope to a sump. Where possible, the sump shall be placed at the end of the containment, traversing the full-length of one side to facilitate cleaning and drainage of rain water and spills. The sump shall be covered with a grating capable of supporting the expected loads and resistant to the materials stored in the area. Removable sections shall be provided with handles. If the sump is longer than 4 feet, the bottom of the sump must slope to a single collection point to facilitate pumping and cleaning. In such cases, a small sump just large enough to accommodate a sump pump may be appropriate.

C. All concrete containment structure surfaces shall be coated with an appropriate chemical-resistant coating. The coating must be sufficient to protect the concrete and contain spills for the period of time during which a spill may be present. (For example, a containment that is left unattended over weekends must be capable of containing a spill for 64 to 72 hours without leakage or degradation of the coating or concrete.) Coatings must be applied in accordance with the manufacturer's recommendations by a qualified technician. Areas accessible to personnel must be treated with a non-skid coat to prevent slips and falls.

D. Surfaces near the containment structure shall be sloped to prevent run-on of rainwater. Designers must perform calculations to ensure adequate containment volumes for all stored materials, rain water, and fire sprinkler flow as required by the municipal storage ordinances.

E. Weatherproof covering shall be installed to prohibit the intrusion of rain water into secondary containment.

13.4.7 Segregation

Incompatible materials may not share the same secondary containment nor any common sumps or drains. In general, acids, bases, neutrals, flammables, and oxidizers must be segregated from each other. O/9K2S will provide information on segregation of specific materials and wastes. Adjacent areas storing incompatible materials shall be separated by a non-combustible partition which extends 18 inches above and beyond the materials stored in accordance with the UFC.

13.4.8 Monitoring

Under the municipal storage ordinances, the method of monitoring may be usual or by automated devices capable of detecting the presence of product in the containment. Electronic monitoring is preferred. Where possible, drains and automated pumps will be avoided to reduce the risk of unintentional discharge. Sump pumps and piping may be installed, but manual switches for operation are required. Procedures and contact phone numbers for spill and rain water removal shall be posted at the site. Any drains shall be equipped with normally closed valves. The capability to lockout such valves shall be provided. Alarms shall be tied into the Service Request Center central alarm system where the potential for overfill during unattended hours exists. Access for visual inspection is recommended.

13.4.9 Signs

Refer to Subsection 13.3.10.

13.5 WASTE WATER PRETREATMENT FACILITIES DESIGN AND INSTALLATION STANDARDS

13.5.1 Objectives

Provide standards for design guidance and options for the pretreatment of LMSSC waste water streams including:

Components
Design Parameters
Performance Criteria
Testing and Acceptance
Control, Monitoring, and Instrumentation Requirements
Layout
Health and Safety
Materials of Construction
Protective Coatings

13.5.2 Codes and Standards

The regulations listed below are the currently applicable regulations:

DHS	Recommended Drinking Water Action Levels, April 1989
FS&O	Section 13.3, Underground Hazardous Material and Storage Tanks
FS&O	Section 13.4, Aboveground Hazardous Material Waste Storage Facilities and Equipment
FS&O	Section 13.6, Waste Water Sampling, Control, and Monitoring Devices, Design and Installation Standards
LEED	Leadership in Energy and Environmental Design, US Green Building Council
40 CFR	Parts 260-267, 403, 433, and 469
Palo Alto	Chapter 16.09
Sunnyvale	Title 12, Title 20, Title 21
Santa Clara	Section 22
San Jose	Title 15, Chapter 15.12, Sewers

13.5.3 Notification to LMSSC

Notify LMSSC of any pretreatment designs and installation during the design stage of the project. LMSSC will provide planning support for agency approvals before construction and forward any required documentation to the agency(s) during and after construction.

13.5.4 Components

Potential components of the Pretreatment Facilities include:

Flow Equalization
pH Neutralization
Diversion System
Effluent Monitoring
Ion Exchange
Activated Carbon Adsorption
Chemical Storage

13.5.5 Design Parameters

A. General

The pretreatment facilities shall be designed to treat waste water generated by LMSSC facilities. Waste water will be present as a combination of dilute non-process industrial waste water, dilute process rinses or as concentrated process baths. The pollutants of interest in the process waste are heavy metals, precious metals, and other toxic substances. Toxic heavy metals expected in waste water streams at LMSSC facilities include but are not limited to Chromium (Cr), Copper (Cu), Zinc (Zn), Nickel (Ni), Lead (Pb), Cadmium (Cd), Tin (Sn), Silver (Ag), and Ammonia (NH3). In addition, varying amounts of organic solvents and other toxic organics may be present in any or all of the waste water streams. The required facilities will be determined by the discharge requirements and the influent waste water. A recommended treatment scheme for the removal of heavy metals and oxidation of sulfides is illustrated in Figure 13.5.1. The design criteria is summarized in Table 13.5.5.1.

B. Flow Equalization

1. Segregation of the incoming waste-streams is essential for safety if the wastes are non-compatible. As shown in Figure 13.5.1, the segregated streams consist of cyanide, hexavalent chromium, acidic, caustic and industrial waste. Tanks containing chromium shall not be interconnected with tanks containing cyanide. Tanks containing acid, caustic and industrial wastes shall not be interconnected with tanks containing chromium or cyanide.

2. The equalization tanks shall provide 10 hours of capacity at the design flow rate. Less capacity is acceptable if approved by LMSSC. The contents of the tanks shall be continuously mixed via pumped recirculation. Control, monitoring and instrumentation requirements are described in Subsection 13.5.8.

3. The contents of the chromium equalization tank shall be pumped at a constant rate to the chromium reduction tank. Cyanide waste water from the cyanide equalization tank shall be pumped to the cyanide waste treatment facilities. The contents of the acid, caustic and the industrial waste equalization tanks shall be pumped to the hydroxide/sulfide treatment system. All equalization tank discharge pumps shall be provided with manually adjustable variable speed drives.

C. Hydroxide/Sulfide Precipitation Process

1. The precipitation process shall be designed to allow either hydroxide or sulfide precipitation to take place. Refer to Figure 13.5.5.

2. Hydroxide or sulfide precipitation are separate treatment options. The characteristics of the waste water determine the preferred method of treatment. The treatment system shall be capable of operating in the hydroxide or sulfide precipitation mode. The operation of the treatment system in either the hydroxide or sulfide precipitation mode shall be as described herein. The contents of the equalization tanks shall be pumped to the first of two-in-series flash mix tanks. The pumps shall be provided with manually adjustable variable speed drives. Standby pumps and low level pump shutoff shall be provided. Within the first flash mix tank the pH shall be adjusted to 8.5 (or a pH optimum for the precipitation of the critical heavy metal) by the addition of sodium hydroxide or magnesium Hydroxide solution. As described in Section 13.5.8, the pH is monitored with a redundant probe. Alarms are activated if the pH is outside the desired range.

3. The overflow from the first rapid-mix tank shall flow by gravity to a second, identical rapid-mix tank. Instrumentation in the second tank shall sound alarms if pH is outside the specified range. If the optimum pH in the first flash mix tank is 8.5, the recommended range for the second flash mix tank is 8.0 to 9.5. An alarm is also activated, or if the ORP is out of the specified ranges.

4. In the event the sulfide precipitation process is utilized, sodium hydrosulfide solution shall be added to the second rapid mix tank. The sodium hydrosulfide addition rate shall be controlled to maintain the dissolved sulfide concentration in the range of 0.5 to 10 mg/l. An alarm shall sound if the sulfide concentration is outside this range during operation of the sulfide treatment process.

5. Liquid polymer shall be added to the second rapid mix tank in either the hydroxide or sulfide precipitation operating mode. The polymer feed system requirements are outlined in Subsection 13.5.5 M. Each flash mix tank shall be sized to provide a minimum detention time of 4 minutes at design flow rate. The contents of each flash mix tank shall be mechanically mixed to provide rapid dispersion of the sodium hydroxide or magnesium hydroxide, sodium hydrosulfide (if used), and polymer.

6. From the flash mix tanks, the waste water shall flow by gravity to a flocculation tank. In this tank the mixing intensity shall be controlled by slow speed (variable) paddle mixers to promote flocculation of the metal hydroxides or sulfides which precipitate from solution as a result of the elevated pH. The minimum detention time in the flocculation tank at design flow shall be 20 minutes. The pH and ORP of the liquid in the flocculation tank shall be monitored continuously, and indicated.

7. Effluent from the flocculation tank shall flow by gravity to an inclined plate gravity clarifier in which the metal hydroxide or sulfide floc is separated from the carriage water by gravity sedimentation. The solids shall settle into a hopper while the clarified liquid shall flow upward through an inclined tube bundle, over a series of weirs and shall be discharged by gravity or pumped to a sand filter. Some settled sludge from the sludge hopper may be pumped back to the flocculation tank to enhance floc formation. The remainder of the solids in the hopper may be periodically pumped to a sludge holding tank. The flow rate of sludge to the sludge holding tank shall be measured, indicated and totalized. The pumping cycle shall be automatic based on sludge level. If authorized by the LMSSC Project Manager, a timer can be substituted for the sludge level control system. The rate of pumping of solids from the hopper shall not be so vigorous as to destroy the floc particles. The rate of sludge pumping shall be manually adjustable. The maximum surface loading rate of the clarifier at design flow rate shall not exceed 0.3 gpm/square foot.

8. For continuous flow systems, the effluent from the clarifier shall flow by gravity to a sand filter. Provisions shall be made to bypass flow from the clarifier directly to the pH adjustment tank. The surface loading rate to the sand filter shall not exceed 5 gpm/ft2. Waste water generated in the process of back washing the sand filter shall

be collected in a waste backwash tank and returned to the caustic waste water equalization tank.

9. To prevent the possible accumulation of noxious fumes and undesirable odor that may be emitted in the sulfide precipitation process (if used); the second flash mix tank, the flocculation tank, and the sodium hydrosulfide solution day tank shall be vented to the building exterior. Forced exhaust ventilation capability shall be provided.

D. pH Adjustment

1. If the sand filter is not required, the clarify effluent shall be routed directly to the pH adjustment storage tank. Effluent from the sand filters shall be discharged to a final pH adjustment storage tank. Flow from the sand filters to the pH adjustment tank may either be by gravity or pumped. The storage tank shall have a minimum residence time of 15 minutes at design flow rate. Provisions shall be made to oxidize or aerate the effluent in the tank to reduce the sulfide concentration to the level required for discharge to control odors in the sewer and to prevent corrosion of the sewer. Refer to Figure 13.5.6.

2. Provisions shall be made for sulfuric acid and hydroxide (sodium or magnesium) addition to maintain effluent pH at acceptable levels for subsequent sewer discharge. Mechanical mixing, in addition to air mixing, shall be provided in this tank. The contents of the diversion tank shall be used to backwash the sand filters.

3. To prevent the possible accumulation of noxious fumes and undesirable odor, the pH adjustment tank shall be vented to the exterior of the building. Forced, adjustable, exhaust ventilation capability shall be provided.

E. Diversion System

A diversion system shall be provided to divert effluent which does not satisfy the sewer discharge limits back to the treatment process. Refer to Figure 13.5.7. From the pH adjustment tank the treated effluent flows by gravity to the EC/pH monitoring tank which has a minimum residence time of 15 minutes at the design flow rate. The pH of the tank shall be measured, indicated and recorded. Excursions outside the desired pH range shall sound an alarm and activate one of the two diversion pumps. Each diversion pump shall be rated to handle the design flow rate. Off specification effluent shall be pumped from the EC/pH monitoring tank to a diversion tank. The diversion tank capacity shall be able to store a minimum of 8 hours of waste water at the design flow rate. Refer to Subsection 13.7.1 for a more detailed discussion of the diversion system.

F. Effluent Monitoring.

The effluent monitoring tank shall be provided to satisfy the monitoring requirements specified by the discharge permit. Typically, flow and pH records are required. The effluent monitoring tank shall have a minimum residence time of 10 minutes at the design flow rate. At a minimum, the pH of the tank contents and the discharging flow rate shall be measured, indicated and recorded. A flow rate totalizer shall also be provided. Additional analyzers required by the discharge permit shall be provided with indication and recording capability. The effluent monitoring tank is illustrated in Figure 13.5.8.

G. LMSSC Project Manager and shall be supplied for the shell side of the exchanger.

H. Carbon Adsorption

1. The carbon adsorption system shall consist of at least two activated carbon adsorption tanks, one transfer tank, tank internals, all required piping and instrumentation as required for a complete and workable system. All tanks shall be

capable of providing an empty bed contact time of 40 minutes at the design flow rate. The LMSSC Project Manager will provide information concerning the influent contaminant concentrations. The effluent shall meet pretreatment discharge requirements of Subsections 13.5.6 and 13.10.4.

I. Chemical Storage

1. Storage tanks shall be provided for all chemicals used in the treatment process, including sulfide, sulfuric acid, sodium hydroxide and liquid polymer. Drains shall be provided on all the chemical storage tanks. Sufficient storage volume shall be provided for a 20 day supply of the chemicals under average use conditions. Provision shall be made for filling the storage tanks from bulk delivery trucks outside the treatment building. Should a 55 gallon drum be sufficient for polymer storage, a separate storage tank shall not be provided. Provision shall also be made for storage of a 20 day supply of sodium metabisulfite and sodium hypochlorite. In addition, chemical mixing and/or dilution tanks shall also be provided.

2. In the design and construction of facilities for bulk chemical delivery by tank truck, provision shall be made for collection, containment and disposal or treatment of truck spills.

3. In addition to the 20 day minimum supply requirement for chemical storage facilities, each storage facility shall also be designed to accommodate a volume of chemical greater than or LMSSC approved equal to 1.33 times the volume of a single bulk shipment. This requirement is necessary to replenish chemicals with a single bulk shipment while there is still available chemical.

13.5.6 Performance Criteria

Given the influent waste water characteristics as defined by LMSSC, the waste water pretreatment facilities shall produce effluent water which satisfies the Federal Pretreatment Standards and the Sanitary Sewer Discharge Requirements from the governing agency. The Federal Pretreatment Standards for the Metal Finishing and Semi Conductor Point Source Categories are presented in Table 13.5.6.1. The Sanitary Sewer Discharge Requirements may be found in the references cited in Paragraph 13.5.2.

13.5.7 Testing and Acceptance

The testing of the pretreatment facility is divided into the three phases:

A. Final Construction Phase

This phase shall include the following:

Check installation with approved drawings, and specifications
Service, adjust, align, and lubricate equipment
Complete instrument piping and tubing
Install instrumentation and orifice plate
Calibrate instrumentation
Install temporary piping and screens
Perform hydrotesting
Operate mechanical and motor-operated valves
Megger equipment
Check wires for continuity
Prepare punch list and as-built drawings
Provide temporary services where permanent installation is incomplete

Refer to the LMSSC FS&O Construction Specifications and Section 13.6 for specific testing requirements. ESH Programs personnel must be notified prior to testing.Tank testing and certification shall comply with 40 CFR 265.190 and Health and Safety Code 25284.4 (a).

B. Component Testing Phase

Once the equipment is ready for functional testing, the component testing phase consists of:

Initially energize electrical circuits and equipment for test
Check motors for rotation and couple
Heat-run large electric motors
Instrument loop check
Clean system
Maintain punch list and as-built drawing
Schedule vendors for initial equipment operation
Provide test records
Provide chemicals and lubricants for initial fill
Remove temporary installation
Refer to the LMSSC FS&O Construction Specifications and Section 13.6 for specific testing requirements. ESH Programs personnel must be kept informed during the component testing phase.

C. Initial Operation Phase

Initial operation commences when the Component Testing Phase is complete. This phase shall include:

Operate and monitor permanent plant system
Record and maintain initial operating records
Perform final tune-up of instrument loops, components, alarms, and trips
Debug systems with deficiencies
Communicate design problems to responsible engineering organizations and obtain solutions
Complete test records and turnover package
Perform routine maintenance and troubleshooting
Perform system acceptance test

Testing shall be conducted for a period specified by LMSSC. Such tests shall be made in order to validate the operating capabilities of the system against the design parameters. If required, modifications shall be made to meet the design requirements.

13.5.8 Control, Monitoring, and Instrumentation Requirements

A. General

The control, monitoring and instrumentation requirements for the pretreatment facility are described below. As a minimum, instrumentation shall be provided as follows:

1. All tanks which have pumped discharge except sumps and effluent holding tanks: high water alarm, low water shutoff of transfer pumps, tank water level indication.

2. Sumps and intermediate and final effluent tanks: high water alarm, low water shutoff of transfer pumps.

3. All sensing devices for chemical feed (i.e., pH, ORP, sulfide, cyanide, probes) as described herein shall be part of a single control loop.

4. Sensing devices for pH shall be installed at each equalization tank. The measured valve shall be locally and remotely indicated as described above with high and low alarms.

5. All flow rates, pH, ORP and level measurements shall be locally and remotely (main control board) indicated and shall be recorded at the main control board.

6. All other alarm status sensing devices shall be locally and remotely (main control board) indicated. All such probes in the flash mix tank, the cyanide effluent tank and the final effluent tank shall be recorded at the main control board.
7. Flow rate to the hydroxide/sulfide process flash mix tanks and from the final effluent tank shall be remotely (main control board) recorded and totalized.

8. All mechanical equipment shall have a local/remote selector switch and on-off control near the equipment, and on-off control at the main control board. The running status of all mechanical equipment shall be indicated at the main control board.

9. All transfer and recirculation pumps shall have pressure gauges with diaphragm seals in the pump discharge line with pump shutoff on high pressure.

10. The main control board shall be a graphic panel showing the flow schematic of the treatment plant. Running status and sensing device indication at the control board shall be coincident with the graphic panel schematic.

11. System alarm conditions shall be indicated on the graphic panel showing the source/cause of the alarm. An alarm condition shall activate a main audio and visual system for alerting the operator. The visual alarm system shall be located in the Plant Engineering Maintenance Central Control Facility.

12. Optimum probe (pH, ORP) location is dependent upon mixer characteristics, influent and effluent points, vessel dimensions etc. Probe location must be approved by LMSSC.

A summary of the minimum instrumentation requirements at each panel are as follows:

Panel	Required Minimum Instrumentation
a. Local panels near particular equipment item	Local/remote selector switch and on-off controls. Running status lights. Alarm conditions indication. Indications of measured parameter (if appropriate).
b. Main control board/graphic panel in the treatment facility	On-off controls. Running status lights. Alarm indication showing source/cause, indication, recording and totalizing of measured parameters.
c. Plant Engineering Maintenance Central Control Facility	Audio and visual alarm.

Design and installation standards for waste water sampling, control and monitoring devices are included in Section 13.6.

B. Flow Equalization

1. The contents of the equalization tanks are continuously mixed via recirculation pumps and the pH of the waste shall be measured at the pump discharge and indicated. A pH less than 2 or greater than 10 shall cause an alarm to sound. Tank level shall be

measured and indicated. A high water level in the equalization tanks shall cause an alarm to sound. Provision shall be made to prevent additional waste water from flowing into the equalization tanks until the high water level condition subsides.

2. The flow shall be individually measured, indicated, recorded and totalized. Automatic low level shutoff of the equalization tank discharge pumps shall be provided.

E. Hydroxide/Sulfide Precipitation Process

1. The pH of the first flash mix tank shall be adjusted to 8.5 by the addition of a sodium hydroxide solution. A pH-based instrumentation loop utilizing a proportional controller shall be utilized. The pH sensor shall be equipped with an alarm which shall sound if the pH exceeds 9.5 or falls below 7.0. A second, backup pH monitor shall also be provided and equipped with an alarm which shall sound if the pH exceeds 9.5 or falls below 7.0.

2. The second rapid mix tank shall also be monitored for pH and ORP. If the pH is less than 8.0 or greater than 9.5, an alarm shall be activated. The ORP measurement is needed to operate this process in the sulfide mode, an alarm shall sound if the ORP is out of the specified range.

3. If the sulfide precipitation process is utilized, sodium hydrosulfide solution shall be added to the second rapid mix tank and shall be controlled by a proportional controller. A sulfide analyzer shall measure the sulfide concentration and shall provide the input signal to the controller. The desired sulfide concentration range shall be 0.5 to 10 mg/l. An alarm shall sound if the sulfide concentration is outside this range during operation of the sulfide treatment process.

4. The clarification process shall be monitored visually by operating personnel. The flow rate of wasted sludge to the sludge holding tank shall be measured, indicated and totalized. The pumping cycle shall be automatic.

F. pH Adjustment

The pH and sulfide concentration of the pH adjustment storage tank contents shall be measured, indicated, and recorded. Provision shall be made for automatic addition of sulfuric acid and sodium hydroxide to maintain effluent pH at acceptable levels for subsequent sewer discharge. An alarm shall sound when the effluent is out of compliance with respect to pH or sulfide.

G. Diversion System

As shown in Figure 13.5.7, the flow rate from the pH monitoring tank to the effluent monitoring tank shall be measured, indicated, recorded and totalized. The pH of the tank contents shall be measured, indicated and recorded. Excursions outside the desired pH range shall sound an alarm and activate the diversion pump placed in the automatic mode. The second diversion pump shall be placed in standby mode to start automatically if the primary diversion pump does not. The liquid level of the pH monitoring tank shall also be measured indicated and recorded. High and low levels shall activate an alarm. The low level shall also disable both diversion pumps.

H. Effluent Monitoring

The effluent monitoring system shall include all the instrumentation and equipment required by the discharge permit. As a minimum, this shall include pH, flow and automatic sampling. The flow shall be measured, indicated, recorded and totaled. The pH shall be measured,

indicated and recorded. The automatic sampler shall be capable of operating in either of the three following modes:

On a flow proportional basis from an external signal
On a time proportional basis from an internal timer
On a manual basis by activation of a switch on the sampler

More specific information concerning these devices is provided in Section 13.6.

LMSSC FS&O Construction Specifications, Volume IV, Electrical.

D. Fire Code Regulations

The diversion system shall conform to the current issue of all applicable city, county, state and federal codes and standards, as included in Section 8, Fire Protection Design Standards.

13.5.11 Materials of Construction

The materials of construction for the pretreatment facilities shall be suitable for the physical and chemical characteristics of the waste water being handled.

13.5.12 Protective Coatings

The interior of all steel chemical tanks and waste water storage or treatment vessels shall be coated or lined with a compatible corrosion-preventive system as required in Section 4, Mechanical Design Standards.

13.6 WASTE WATER SAMPLING, CONTROL AND MONITORING DEVICES DESIGN AND INSTALLATION STANDARDS

13.6.1 Objectives

A. This section provides design and installation standards for waste water sampling, control and monitoring devices. These standards include specifications, standard installation details and control loops.

B. Specifications are included for the following devices:

1. Control Boards
2. Automatic Sampling Equipment
3. pH Analyzer/Transmitter System
4. ORP Analyzer/Transmitter System
5. Conductivity Analyzer/Transmitter
6. Liquid Level Transmitter
7. Level Measurement System, Capacitance/Admittance
8. Flow Transmitter, Open Channel Sonic
9. Differential Pressure, Flow Transmitter
10. On-Line Propeller Meter
11. Open Flow Propeller Meter
12. Open Channel Flow Meter
13. Pressure Transmitter
14. Temperature Transmitter
15. Density Meter, Optical
16. Sulfide and Cyanide On-line Analyzers
17. Motor Control Center
18. Recorder, Indicating Strip Chart
19. Totalizer and Integrator

20. Proportional, Plus Reset, Plus Derivative Process Controller (Microprocessor Based)

C. Standard installation details are also provided for:

1. pH/ORP Mounting for Open Tank
2. pH/ORP Mounting for Closed Tank
3. pH/ORP Mounting for Closed Tank Insertion Type
4. pH/ORP Insertion Mounting
5. Tank Level Probe and Transmitter
6. Level Indicator
7. On-Line Propeller Meter

D. A description and figure is also included for each of the following control loops. Figures for loops not already presented in Section 13.5 are also included.

1. pH/ORP Monitoring System
2. pH/ORP Control System
3. Sludge Pump Control
4. Filter Control
5. Effluent Monitoring and Sampler
6. Sump Pump Control
7. Mixer Control
8. Flow Diversion/Recycle Control
9. Flow Meter
10. Centrifugal Pump Control
11. Metering Pump Control

13.6.2 Codes and Standards

Waste water sampling, control, and monitoring devices shall comply with the currently applicable references, standards, and regulations listed below. The Design Engineer shall verify that no other standards or regulations apply.

ICS1 (NEMA)	General Standards for Industrial Controls and Systems
IEEE	Recommended Practices for Grounding of Industrial and Commercial Power Systems
LEED	Leadership in Energy and Environmental Design, US Green Building Council
UL 508	Industrial Control Equipment
UL 198D	Class K Fuses

13.6.3 General

A. The Contractor shall furnish, install and place into service waste water control, sampling and monitoring devices, including accessories related to this project.

B. The Contractor shall assign to the Instrumentation Subcontractor full responsibility for the functional operation of all new instrumentation systems. The Contractor and Instrumentation Subcontractor may be the same entity if the Contractor is qualified for such work. The Contractor shall have said Subcontractor perform all engineering necessary in order to select, to furnish, to install and connect, to calibrate, and to place into operation all sensors, instruments, alarm equipment, control boards and panels, accessories, and all other equipment as specified herein. The Instrumentation Subcontractor shall be experienced in the installation of instrumentation probes, controllers, transmitters and in the installation of control panels and shall have a proven track record or performance in these areas.

C. The Contractor shall utilize personnel provided by its assigned Instrumentation Subcontractor's organization to accomplish the physical installation of all elements,

instruments, accessories or assemblies which he furnishes. The Instrumentation Subcontractor shall employ installers who are skilled and experienced in the installation and connection of all elements, instruments, accessories, and assemblies being furnished by him.

D. As part of the contract, the Contractor shall provide the following services of qualified technical representatives of the Instrumentation Subcontractor:

1. To install and connect all instruments, elements, and components of every system, including connection of instrument signals to primary measurement elements and to final control elements such as pumps, valves, and chemical feeders.

2. To make all necessary adjustments, calibrations and tests; and system debugging.

3. To instruct LMSSC plant operating and maintenance personnel on instrumentation. This time shall be in addition to whatever time is required for other facets of work at the site, and shall be during the normal working days and hours.

E. All meters, instruments, and other components shall be the most recent field proven models marketed by their manufacturers at the time of submittal of shop drawings, unless otherwise specified. All technical data publications included with submittals shall be the most recent issue.

F. Spare parts shall be provided in accordance with Section 4, Mechanical Design Standards.

13.6.4 Instrumentation Criteria

A. In the design specifications and drawings, all systems, meters, instruments, and other elements shall be represented schematically, and designated by numbers, as derived from criteria in Instrument Society of America Standard ANSI/ISA S5.1-1981. The nomenclature and numbers designated shall be employed exclusively throughout shop drawings, data sheets, and similar materials. Any other symbols, designations, and nomenclature unique to the manufacturer's standard methods shall not replace those prescribed.

B. Signals shall be electrical as indicated herein, and shall vary in direct inner proportion to the measured variable, except as noted. Electrical signals outside control board(s) shall be 4 to 20 mA DC except as noted. Signals within enclosures may be 1-5 volts DC.

C. All instruments to be panel-mounted and the control boards shall have matching style and general appearance. Instruments performing similar functions shall be of the same type, model, or class, and shall be of one manufacturer.

D. Each system's accuracy shall be determined as a probable maximum error, this shall be the square root of the sum of the squares of certified "accuracies" of certain designated components in each system, expressed as a percentage of the actual span or value of the measured variable. Each individual instrument shall have a minimum accuracy of 0.25 percent of full scale unless otherwise specified. Instruments which do not conform to or improve upon these criteria are not acceptable.

E. Signal isolators shall be furnished and installed in each measurement and control loop, wherever required, to ensure adjacent component impedance match or where feedback paths may be generated. Signal converters shall be included where required to resolve any signal level incompatibilities. Signal power supplies shall be included, as required by the manufacturer's instrument load characteristics, to ensure sufficient power to each loop component.

13.6.5 Detailed Systems Drawings and Data

A. Content

The Contractor shall submit detailed design and/or shop drawings and data prepared and organized by the Instrumentation Subcontractor who was designated at the time of bidding. The quantity of submittal sets required shall be as specified in these Facility Design Standards. The design and/or shop drawings shall include:

1. Drawings showing definitive diagrams for every instrumentation loop system

   These diagrams shall show and identify each component of each loop or system using legend and symbols from ISA Standard S5.4, extending the format of ISA Standard S5.1. (Each system or loop diagram shall be drawn on a separate drawing sheet.)

2. Data sheets for each component together with a Technical Product Brochure or Bulletin. The data sheets shall show:

   Component functional description
   Manufacturer's model number or other product designation
   Project tag number
   Project system or loop of which the component is a part
   Project location or assembly at which the component is to be installed
   Input and output characteristics
   Scale range and units (if any) and multiplier (if any)
   Requirements for electric supply (if any)
   Requirements for air supply (if any)
   Materials of component parts to be in contact with, or otherwise exposed to process media

   Special requirements or features

   A complete index shall appear in the front of each bound submittal volume. A separate technical brochure or bulletin shall be included with each instrument data sheet. The data sheets shall be indexed in the submittal by systems or loops, as a separate group for each system or loop. If, within a single system or loop, a single instrument is employed more than once, one data sheet with one brochure or bulletin may cover all identical uses of that instrument in that system. Each brochure or bulletin shall include a list of tag numbers for which it applies. System groups shall be separated by labeled tags.

3. Drawings showing both schematic and wiring diagrams for control circuits

   Complete details on the circuit interrelationship of all devices within and outside each control board shall be submitted first, using schematic control diagrams. Subsequent to return of this first submittal, piping and wiring diagrams shall be prepared and submitted for review; the diagrams shall consist of component layout drawings to scale, showing numbered terminals on components together with the unique number of the wire to be connected to each terminal, piping and wiring diagram measurement devices, such as flow meters, and to all final control devices, such as samplers. Furnish all necessary equipment supplier's shop drawings to facilitate inclusion of this information by the Instrumentation Subcontractor.

4. Assembly and construction drawings for each control board and for other special enclosed assemblies for field installation

These drawings shall include dimensions, identification of all components, surface preparation and finish data, nameplates, and the like. These drawings also shall include enough other details, including prototype photographs, to define exactly the style and overall appearance of the assembly; a finish treatment sample shall be included.

5. Installation, mounting, and anchoring for all components and assemblies to be field-mounted, including conduit connection or entry details.

6. Complete and Detailed Bills of Materials including each field mounted device or assembly as well as cabinet assemblies and sub-assemblies

   Bills of Material shall include all items within an enclosure.

B. Organization and Binding

The organization of the initial design and/or shop drawing submittal required above shall be compatible to eventual inclusion with the Technical Manuals submittal and shall include final alterations reflecting "as-built" conditions. Accordingly, the initial multiple-copy shop drawing submittal shall be separately bound in 3 ring binders of the type specified herein, for the Technical Manuals.

13.6.6 Technical Manuals

In addition to updated shop drawing information to reflect actual existing conditions, each set of technical manuals shall include installation, connection, operating, troubleshooting, health and safety, maintenance, and overhaul instructions in complete detail. This shall provide LMSSC with comprehensive information on all systems and components to enable safe operation, service, maintenance, and repair. Exploded or other detailed views of all instruments, assemblies and accessory components shall be included together with complete parts lists and ordering instructions. The manuals shall provide a complete listing of spare parts and sources for same.

13.6.7 Installation, Calibration, Testing, Start Up, and Instruction

A. General

Under the supervision of the Instrumentation Subcontractor designated by the Contractor, all systems specified herein shall be installed, connected, calibrated and tested, and in coordination with LMSSC, shall be started to place the plant processes in operation. This shall include final calibration in concert with equipment specified elsewhere in these Standards, including pumps, valves, chemical feeders and analyzers.

B. Installation and Connection

1. The Contractor shall have the Instrumentation Subcontractor install and connect all field-mounted components and assemblies. Installation personnel shall be provided with a final reviewed copy of the shop drawings and data.

2. The instrument process sensing lines and air signal tubing shall, in general, be installed in a similar manner to the installation of conduit. Individual tubes shall be run parallel and near the surfaces from which they are supported. Supports shall be used at intervals of not more than 3 feet of rigid tubing.

   Bends shall be formed with the proper tool and to uniform radii and shall be made without deforming or thinning the walls of the tubing. Plastic clips shall be used to hold individual plastic tubes parallel. Ends of tubing shall be square cut and cleaned before being inserted in the fittings. Bulkhead fittings shall be provided at all panels.

3. The Contractor shall have the Instrumentation Subcontractor assign a technical field representative from each of the various instrument manufacturers as required to instruct the installation personnel on any and all installation requirements; thereafter, the technical field representative(s) shall be readily available by telephone to answer questions and supply clarification when needed by the installation personnel.

4. Finally, after all installation and connection work has been completed, the Instrumentation Subcontractor shall check for correctness, verify polarity of electric power and signal connections, and make sure all process connections are free of leaks, and all such similar details. The Instrumentation Subcontractor shall certify in writing to the Contractor that for each loop or system he has completed such check out and that any discrepancies have been corrected by the installation personnel.

C. Calibration

1. All instruments and systems shall be calibrated after installation, in conformance with the component manufacturer's written instructions. This shall provide that those components having adjustable features are set carefully for the specific conditions and applications of this installation, and that the components and/or systems are within the specified limits of accuracy. Defective elements which cannot achieve proper calibration or accuracy, either individually or within a system, shall be replaced. This calibration work shall be accomplished by the technical field representatives of the Instrumentation Subcontractor, who shall certify in writing to the Contractor that for each loop or system all calibrations have been made and that all instruments are ready to operate.

2. Proof of Conformance

The Contractor and its designated Instrumentation Subcontractor is responsible for submitting the burden of proof of conformance according to specified accuracy and performance. The Contractor's designee shall supply necessary test equipment and technical personnel if called upon to prove accuracy and/or performance, at no separate additional cost to LMSSC, wherever reasonable doubt or evidence of malfunction or poor performance may appear within the warranty period.

D. Testing

All systems shall be exercised through operational tests in the presence of LMSSC in order to demonstrate achievement of the specified performance. ESH Programs personnel must be apprised prior to testing and should be present during testing and start up. This is necessary to ensure permits and other requirements are in order. Operational tests depend upon completion of work specified elsewhere in these Standards. The scheduling of tests shall be coordinated by the Contractor among all parties involved so that the tests may proceed without delays or disruption by uncompleted work.

E. Start Up

When all systems are assessed by the Contractor to have been successfully carried through complete operational tests with a minimum of simulation, plant start up by the Contractor's operating personnel can follow. For a minimum of 2 days prior to start up, operating and maintenance personnel shall be instructed in the functions and operation of each system and shall be shown the various adjustable and set point features which may require readjustment, resetting or checking, recalibration or maintenance by them from time to time. Instruction shall be given by qualified persons who have been made familiar in advance with the systems in this plant. Start up activities must be coordinated with ESH Programs personnel as explained above.

13.6.8 Additional Technical Field Services

The Contractor shall include, and shall require the Instrumentation Subcontractor to include visits by, and services of, technical field representatives of the manufacturers of the following items of equipment for calibration: testing and start up of flow meters, pH analyzers, ORP analyzers, and on-line sulfide and cyanide analyzers.

13.6.9 Control Boards

A. General

As a minimum, the Contractor shall design, furnish and install control boards as specified by this section. Signals from all field-mounted instruments and alarms shall be transmitted to the control boards. Also included shall be a graphics board showing the flow schematic of the treatment plant. Running status and sensing device indication at the panel shall be coincident with the graphic panel schematic. The control boards' assemblies shall be vertical type. Each shall be front access type. Each shall house the instrumentation, control devices, indicating lights, alarm chassis and displays, all necessary accessories, wiring and terminal blocks.

B. Construction

1. The control boards shall be enclosed by steel sheeting on all sides including top and bottom. The enclosure shall be manufactured of 14 gauge steel so formed as to provide structural strength in excess of standard cabinets employing 1/8 inch steel of standard construction. The enclosure shall have fully gasketed front swinging door equipped with a vault-type handle and tumbler lock. The door shall be rigidly formed with stiffeners as required to eliminate diagonal twist.

2. Where cutouts are to be provided for mounting future front panel-mount instruments, the cutouts shall be covered with a cover plate finished to match the surrounding panel.

3. Designated cabinet enclosures shall be set off with trim strips top and sides, and shall be equipped with front access dust screen and associated grill.

4. The enclosure shall be leveled, anchored, and bolted to the floor. Enclosures with more than 4 square feet of panel space shall be floor standing and enclosures of less than 4 square feet may be wall hung cabinets.

5. The components within the control board shall be mounted on fixed panels accessible through the front door. Space shall be provided for expansion of the system by 10 percent of its initial size.

6. All equipment shall be furnished and installed on the front of the cabinets.

7. The control boards shall be constructed and wired in such a way that it can be shipped and installed as a complete unit and may be moved through doorways by tilting the sections to horizontal.

8. Local control boards shall be furnished with a duplex convenience outlet powered from a dedicated, ground-fault protected, circuit breaker.

C. Signal and Control Circuit Wiring

1. Wire Type and Sizes

Conductors shall be flexible stranded copper machine tool wire; these shall be UL listed Type MTW and shall be rated 600 volts. Wires for instrument signal circuits and alarm input circuits shall be No. 18 AWG. All other wires, including shielded cables, shall be No. 16 AWG minimum.

2. Wire Insulation Colors

Conductors supplying 120 VAC power on the line side of a disconnecting switch shall have a black insulation for the ungrounded conductor. Grounded circuit conductors shall have white insulation. Insulation for ungrounded 120 VAC control circuit conductors shall be red. All wires energized by a voltage source external to the control board(s) shall have yellow insulation. Insulation for all DC conductors shall be blue. The equipment grounding conductor shall be green.

3. Wiring Installation

All wires shall be run in plastic wire ways except (1) field wiring, (2) wiring run between mating blocks in adjacent sections, (3) wiring run from components on a swing-out panel to components on a part of the fixed structure, and (4) wiring run to panel-mounted components. Wiring run from components on a swing-out panel to other components on a fixed panel shall be made up in tied bundles. These shall be tied with nylon wire ties, and shall be secured to panels at both sides of the "hinge loop" so that conductors are not strained at terminals with nylon wire ties and secured to the inside face of the panel using adhesive mounts. Wiring to rear terminals on panel-mount instruments shall be run in plastic wire ways secured to horizontal brackets run above or below the instruments in about the same plane as the rear of the instruments.

Conformance to the above wiring installation requirements shall be reflected by details shown on the design and/or shop drawings for review.

4. Wire Marking

Each signal, control, alarm, and indicating circuit conductor connected to a given electrical point shall be designated by a single unique number which shall be shown on all shop drawings. These numbers shall be marked on all conductors at every terminal using white numbered wire markers which shall be plastic-coated cloth, or shall be permanently marked heat-shrink plastic.

5. Terminal Blocks

Terminal blocks shall be molded plastic with barriers and box lug terminals, and shall be rated 15 amperes at 600 volts. White marking strips, fastened securely to the molded sections, shall be provided and wire numbers of circuit identifications shall be marked thereon with permanent marking fluid.

D. Painting

Control board(s) shall be thoroughly cleaned and sandblasted per SSPC-SP-6 (Commercial Blast) after which surfaces shall receive a prime coat 3 mils dry, followed by 2 or more finish coats 3 mils dry, for a total thickness of the complete system of 6 mils. The finished color of

the outside surfaces will be selected by LMSSC. The inside surfaces shall have a white finish coat.

E. Accessories

1. General Purpose Relays

General purpose relays in the control board(s) shall be plug-in type with contacts rated 10 amperes at 120 volts ac; quantity and type of contacts shall be as required. Each relay shall be enclosed in a clear plastic heat and shock resistant dust cover. Sockets for relays shall have screw type terminals.

2. Time Delay Relays

Time delay relays shall be pneumatic on-delay or off-delay type with contacts rated 10 amperes at 120 volts ac. Units shall include adjustable dial with graduated scale covering the time range in each case.

3. Push Buttons and Indicating Lights

Push buttons and indicating lights shall be square configuration. Push buttons and lights shall include black collars; pushbuttons shall include mechanical interlocking as required in each case.

4. Selector Switches

Selector switches shall be of the rotary type with the number of positions as required. Color, escutcheon engravings, contact configurations and the like shall be as required.

5. Circuit Breakers

Circuit breakers shall be single pole, 120 volt, 15 ampere rating or less as required to protect wires and equipment, and mounted inside the panels. Loads served by these circuit breakers shall be clearly identified and shall be segregated as feasible to allow maintenance without the need to shut down major plant processes.

6. Nameplates

A nameplate shall be supplied for identifications of certain field-mounted elements, including flow meters and their transmitters, density meter transmitters indicators, chemical analyzers, and flow control valves. These nameplates shall identify the instrument, valve, analyzer, or meter, descriptively, as to function and system. These nameplates shall be fabricated from black-face, white-center, laminated engraving plastic. A nameplate shall be provided for each signal transducer, signal converter, signal isolator, each electronic trip, and the like, mounted inside the control board(s). These shall be descriptive, to define the function and system of such element. These nameplates shall be of the same material as those on the front of the control board(s), as specified below. The nameplate shall have the same number shown on the design drawing.

Front-panel located nameplate mounting hardware shall not be visible from the face of the control board(s).

Nameplates shall be provided for instruments, function titles for each group of instruments, and other components mounted on the front panel(s) of the control board(s) as required. Colors, lettering, style and sizes shall be as shown or as selected by the Government.

7. Signal Isolator

Signal isolators shall have complete isolation of input, output and power input. Signal input shall be 4-20 mA into 50 ohms maximum, signal output shall be 4-20 mA into 1000 ohms minimum. Power input shall be 120 VAC 60 Hz. Span and zero shall be adjustable; accuracy shall be 0.1 percent of span. Units shall be surface or rack mounted.

F. Alarm Annunciator System

1. General

Alarm annunciator systems shall include a backlighted window display, alarm modules, flasher-audible modules, power supply, and horn. The backlighted window display shall be housed in an enclosure suitable for panel mounting. The alarm and flasher-audible modules shall be located in a rack or surface-mounted card cage separate from the display. The annunciator shall have a lamp test feature.

The alarm sequence shall be ISA Sequence M as follows: In alarm condition horn sounds and displays flashers, when acknowledged horn is silent and display is continuously on and stays on until the alarm clears and it is manually reset. Momentary alarms shall be locked in until acknowledged.

An adjustable 0-15 minute timer shall automatically acknowledge alarms after the preset time to prevent indefinite sounding of alarms.

2. Alarm Modules

The alarm point modules shall be solid-state electronic devices. Each module shall function on a dry input contact which closes on the abnormal condition and which reopens when the condition is corrected. Each alarm module shall provide a switching device for optional N.O. or N.C. contact operation. Alarm modules and flasher-audible modules shall be easily removable for ease of inspection and servicing. Alarm logic shall be provided for all display points, both present and future.

3. Alarm Display

The alarm display group shall consist of active and future display windows. Each window shall have 2 lamps rated at 40,000 hours. Each lamp shall be high intensity, approximately 6 volt 1 watt, wired so that one lamp burnout will not affect the other lamp. The window configuration shall be approximately 1 inch high by 3 inches wide and arranged in the display as shown. All lamps shall be replaceable from the front of the display.

Windows shall be engraved; characters on each line shall be centered in the window; all characters shall be engraved the same size with the same line thickness; they shall be neatly spaced along the lines and the lines shall be uniformly and symmetrically spaced apart to give an attractive, orderly, and easy-to-read display.

4. Audible Alarm Horn

The audible alarm shall have a volume adjustment with a low limit setting.

5. Input Delays

Alarm inputs to the annunciator shall have input time delays to prevent momentary initiation of alarms. Time delays shall be adjustable from 0-30 seconds.

6. Switches

Alarm acknowledge, reset and lamp test switches shall be panel mounted separate from the annunciator.

13.6.10 Automatic Sampling Equipment

A. The Contractor shall furnish and install automatic sampling units as required for reporting and monitoring requirements pertinent to the treatment facility imposed on LMSSC by local, state, or federal regulations. Each unit shall include automatic waste water samplers, refrigerated sample collectors, and sampling chambers.

B. The sampler and pump installations shall include all piping, valves, fittings, special equipment, and appurtenances as specified herein. Painting of samplers shall be as required for service.

C. All anchor bolts, nuts, and washers shall be hot dip galvanized.

D. The Contractor shall provide the services of a qualified representative of the manufacturer for at least one day to check the installed units and one additional day to instruct LMSSC's operating personnel.

E. Each sampler shall be a self-contained, factory pre-wired, floor-standing unit. The sampler shall be either the vacuum/pressure type or the peristaltic type. Each unit shall be mounted in a frame or cabinet that provides a minimum clearance of 2 inches between the floor and the bottom of the sample collector. Each leg or corner of the frame or cabinet shall have leveling devices to ensure proper vertical and horizontal alignment of the unit, and shall be rigidly anchored as specified herein. Each sampler shall be capable of operating in either of the three following modes:

1. On a flow proportional basis from an external signal
2. On a time proportional basis from an internal timer
3. On a manual basis by activation of a switch on the sampler

F. Each sampler shall be capable of taking from 50 ml to 500 ml of sample per sampling cycle. The sample line shall be automatically purged either at the beginning or end of the cycle.

1. The 3 way solenoid valve shall operate the switching compressor lines to purge the sample line with compressed air.

2. At preset time, the solenoid shall switch the compressor line to create a vacuum in the sample line and metering chamber to cause the sample to flow and fill the metering.

G. Flow signals to the sampler shall be 4-20 mA converted as required within the sampler. The sampler shall have an internal relay for operation from the flow signal. The flow accumulator shall be capable of initiating the sample sequence after a preset volume. This preset volume shall be variable from 1 to 100,000 volumetric units. The flow pulse accumulatory counting coil circuit shall provide an electrical resistance of at least 2000 ohms.

H. The internal timers shall be capable of initiating the sampler sequence after a preset time has elapsed. This preset time shall be at least variable from 4 minutes to 12 hours.

I. Each sampler shall provide a dry set of electrical contacts for operational status monitoring which close at the start of the sampling sequence and which remain closed until the entire sampling sequence has been completed. The electrical contacts shall be rated for 5 amps, 115 volts continuous duty.

J. Each sampler shall operate on 120 volt, single phase, 60 Hz power. Each sampler shall be supplied with power cord and plug, flow signal, and status signal.

K. Each sampler shall be enclosed in a watertight steel cabinet and shall comply with NEMA 4 specifications. Each cabinet shall contain access doors with locking mechanisms. All equipment within the cabinet shall be easily accessible for maintenance.

L. Each sampler shall be equipped with a length of tubing suitable for connection with the sampling chamber. Inside diameter of the tubing shall not be less than 3/8 inch. The tubing shall be connected using stainless steel hose clamps. Instruments shall be ISCO Model 5000g or equivalent.

13.6.11 pH Analyzer/Transmitter System

A. General

Each pH Analyzer/Transmitter System shall consist of an indicator analyzer/transmitter, preamplifier, pH probe assembly, mounting hardware and interconnecting cables. Typical installation details are included in Figures 13.6.1 pH/ORP Mounting for Open Tank, 13.6.2 pH/ORP Mounting for Closed Tank, 13.6.3 pH/ORP Insertion Mounting, and 13.6.4 pH/ORP Tank Level Probe and Transmitter.

B. pH Analyzer/Transmitter

The pH Analyzer/Transmitter shall continuously measure and indicate the pH of an aqueous solution over the expected ranges for the solution. The analyzer shall produce a 4-20 mA DC output signal proportional to the measured pH and shall be capable of delivering this output signal into a minimum load of 600 ohms. All pH readings shall be automatically compensated for temperature variations from 32° to 200°F. The pH analyzer/transmitter shall be in a NEMA 4X enclosure and shall be suitable for either surface or panel mounting. Power input shall be 120 VAC 60 Hz.

C. pH Preamplifier

The pH preamplifier shall be integral to a watertight pH probe assembly. The unit shall be immune to electrical noise.

D. pH Probe Assembly

Each pH probe assembly shall be a heavy duty industrial type and shall contain the pH measuring electrode, reference or standard electrode and automatic temperature compensation electrode. The pH probe assembly shall be submersion or flow through type as required.

1. Submersion probe assemblies shall be of PVC or teflon construction and shall be supplied with suitable mounting hardware and interconnecting cable for installation in tanks. Interconnecting cable shall be supplied and shall be of suitable length for proper installation and servicing of the probe assembly. Each submersion probe shall be rigidly held in the tank by a support assembly constructed of material that is unaffected by the process. The support assembly with probe shall be easily removable from the tank so as to allow routine maintenance on the probe. Support assembly shall have submersion well to assure probe is submerged when tank is empty.

2. Flow through probe assemblies shall be PVC or teflon construction and shall include all necessary hardware and interconnecting cable for mounting the unit on PVC lines as required. Interconnecting cable shall be supplied and shall be of suitable length for proper installation and servicing of the probe assembly.

3. The pH Analyzer/Transmitter System shall be Uniloc Model 1002/381, Great Lakes Model 90/6132/6142 or LMSSC approved equal.

13.6.12 ORP Analyzer/Transmitter System

A. Each ORP Analyzer/Transmitter System shall consist of an indicator analyzer/transmitter, preamplifier and probe assembly. The figures for the standard installations listed below are provided in Figures 13.6.1 pH/ORP Mounting for Open Tank, 13.6.2 pH/ORP Mounting for Closed Tank, 13.6.3 pH/ORP Insertion Mounting, and 13.6.4 Tank Level Probe and Transmitter.

B. Each ORP Analyzer/Transmitter shall continuously measure and indicate ORP of an aqueous solution within the ranges listed below:

Location	Scale
Cyanide Treatment Tanks	-700 to + 0 mV
Chromium Treatment Tanks	0 to + 1000 mV
Flash Mix Tanks	0 to + 1000 mV

1. The analyzer shall produce a 4-20 mA DC output signal proportional to the measure of ORP and shall be capable of delivering this output signal into a minimum load of 600 ohms.

2. The ORP analyzer/transmitter shall be in a NEMA 4X enclosure and shall be suitable for either surface or panel mounting power input shall be 120 VAC, 60 Hz.

C. ORP Preamplifier

The ORP Preamplifier shall be integral to a waterfront ORP probe assembly. The unit shall be immune to electrical noise.

D. ORP Probe Assembly

1. Each ORP Probe Assembly shall be a heavy duty industrial type and shall contain the ORP measuring electrode and reference or standard electrode. The ORP probe assembly shall be the submersion type as specified herein.

2. Submersion probe assemblies shall be of PVC or teflon construction and shall be supplied with suitable mounting hardware and interconnecting cable for installation in the required tanks. ORP measurement electrodes shall be platinum. Interconnecting cable shall be supplied and shall be of suitable length for proper installation and servicing of the probe assembly. Each submersion probe shall be rigidly held in the tank by a support assembly constructed of material that is unaffected by the process. The support assembly with probe shall be easily removable from the tank so as to allow routine maintenance on the probe. Support assembly shall have submersion well to assure probe is submerged when tank is empty.

13.6.13 Conductivity Indicating Transmitter

A. The conductivity indicating transmitters shall be of the contacting conductivity type for in-line means of measuring ionic content of a sample stream. The measurement of conductivity of a solution shall be by the application of a low voltage square wave across a set of electrodes which are in actual contact with the process fluid. The current that flows as a result of the applied voltage shall be sampled to provide the measure of conductivity (conductivity being proportional to the resultant current flow). The conductivity cell factor and range of the measuring instrument shall be as specified on the data sheets. Sensors shall be provided with automatic temperature compensators for providing accurate and rapid responses to process temperatures. The sensor-mounting design shall be of the insertion-type complete with gate valve insertion systems which allows the sensors to be removed

from the system while it is operating without shutting down the process. The contacting conductivity insertion-type sensors shall be designed for high temperature, its design pressure shall be as stated on the data sheets. The gate-valve assembly shall be designed to mate with a 1 inch FNPT process line connection. Twenty feet of integral cable shall be provided between the contacting conductivity sensor and transmitters.

B. The conductivity indicating transmitters shall be of the 2 wire type with an accuracy of 0.5 percent of span and repeatability of better than 0.1 percent of span. The transmitters range shall be as specified on the data sheet. The transmitter output signal shall be 4-20 mA DC, the mounting shall be for 2 inch pipe with mounting bracket. The transmitter housing construction shall meet the NEMA 4 requirements.

C. Instruments shall be Foxboro, Leeds & Northrop, Beckman or LMSSC approved equal.

13.6.14 Liquid Level Transmitter

A. The differential pressure sensing level transducer unit shall be flanged. The transmitter shall be a 2 wire device with the following features: continuously adjustable span, zero and damping adjustments, integral indicator scaled in engineering units, solid-state circuitry, and 4-20 mA output. Accuracy shall be 0.5% of span. Process wetted parts for the body and flange shall be compatible with the process solutions. The flanged process connection shall be ANSI 3 inch 150 lbs.. The low pressure connection shall be 1/4 or 1/2 NPT.

B. The level transmitter shall be Fischer and Porter Type 50DPL100, Bristol Babcock Model 2408-50, or LMSSC approved equal.

13.6.15 Level Measurement System, Capacitance/Admittance

A. The level measurement system shall consist of a probe, electronic transmitter and interconnecting cable. Standard installation is provided in Figure 13.6.4.

B. The transmitter shall be a solid-state unit with 4-20 mA output into 500 ohms minimum. The transmitter shall have non-interacting zero and span controls, a local digital indicator scaled in engineering units, and a NEMA 4 enclosure. Level measurement shall not be affected by probe coatings. Level shall be sensed by measuring probe capacitance or admittance. The transmitter shall have an internal 120 VAC power supply. Radio frequency interference filters shall be provided for level sensing input and transmitter output signals.

C. The probe shall be a stainless steel rod with a corrosion resistant insulating sleeve suitable for use in the fluid to be measured. Probe mounting shall be compatible with the process solution. The probe assembly shall be supported as necessary, and shall have appropriate perforations. Probe length shall be as specified or shown on the drawings.

D. Level measurement systems shall be Drexelbrook System C-508-25-X, Endress & Hauser Model LTC 1220, or LMSSC approved equal.

13.6.16 Level Indicator

Local level indicators are shown in Figure 13.6.5.

13.6.17 Flow Transmitter, Open Channel Sonic

A. Sonic flow measuring systems shall consist of an electronic controller-transmitter, a non-contact sonic transducer, and interconnecting cables. The controller-transmitter shall generate the sonic signal to drive the transducer, detect the return echo and convert the elapsed time first to a level signal and then to a linearized flow signal as required by the type of flume, weir or channel.

B. The controller-transmitter shall have a NEMA 4X enclosure, and a 4-20 mA output signal linearly proportional to flow. The sonic transducer shall be watertight and constructed of corrosion resistant materials and shall be suitable for use in a Class 1 Division 1 hazardous area.

C. Sonic flow measuring systems shall be by Polysonics or LMSSC approved equal.

13.6.18 Differential Pressure/Flow Transmitter

A. Differential pressure/flow transmitters shall be 2 wire devices with the following features: Continuously adjustable span, zero and damping adjustments, integral indicator, scaled in engineering units, square root extraction, solid-state circuitry and 4-20 mA output. Accuracy shall be 0.25% of span from 25 to 100 percent of flow. Process wetted materials and valve bodies shall be compatible with process solutions. Process connections shall be 1/4" or 1/2" NPT. A 3 valve manifold shall be furnished with the transmitter. Unless otherwise specified, the manifold wetted materials shall be the same as specified for the transmitter.

B. The differential pressure transmitter shall be Rosemount 1151 DP, Bristol-Babcock Model 2408-33B, or LMSSC approved equal.

13.6.19 On-Line Propeller Meters

A. The meters shall be suitable for operation with waste water at process temperatures. Each propeller meter shall register flow to a guaranteed accuracy of 2 percent. A typical installation is provided in Figure 13.6.6. Plugs shall be provided to close pipe when propeller is taken out for service.

B. The propeller meters shall be a material suitable for expected service conditions. Each meter shall feature a 4 pole magnetic type drive which will prevent the process fluid from contacting any gears, bearings, shafts, etc., within the meter. The rotation of the propeller shall be transmitted from the magnetic drive to the register and transmitter by means of a flexible or rigid connecting shaft. The propeller shall be of 3 bladed conical design, constructed of rigid plastic that will not flex or otherwise change in dimension under maximum flow conditions through the meter. Each meter shall be furnished with a 6 digit direct-reading totalizer, registering in gallons.

C. Those meters requiring remote indication, recording, or control, shall be equipped with a transmitter which shall be of the optical pulse-rate generator type. The pulse frequency signal of 0-20 pulses per second shall be proportional to a flow from zero to maximum flow.

13.6.20 Open Flow Propeller Meters

A. The meters shall be suitable for operation with treated waste water at process temperatures. Each propeller meter shall register flow to a guaranteed accuracy of 2 percent throughout the range specified.

B. The propeller meter shall be furnished complete with straightening vanes, where the straight pipe approach is less than 8 pipe diameters. Meters shall be of a material suitable for expected service conditions. Each meter shall feature a 4 pole magnetic type drive, which will prevent the process fluid from contacting any gears, bearings, shaft, etc. The meter shall have a bevel gear, guide and thrust bearings in a watertight brass housing, magnets, a brass drop pipe and stainless steel support arms. The propeller shall be of 3 bladed conical design, constructed of rigid plastic that will not flex or otherwise change in dimension under maximum flow conditions through the meter. Each meter shall be furnished with a 6 digit, direct reading totalizer, registering in gallons.

C. Those meters requiring remote indication, recording, or control shall be equipped with a transmitter which shall be of the optical pulse-rate generator type. The pulse frequency signal of 0-20 pulses per second shall be proportional to a flow from zero to maximum flow.

13.6.21 Open Channel Flow Meter

A. Open channel flow meters shall be fiber glass insert type (Parshall flumes), and shall be used to measure flow in open channels, gravity flow sewers or drains. They shall only be used where other forms of flow monitoring are inappropriate.

B. The flume insert shall be a full-length, molded, fiber glass-reinforced polyester liner fabricated in one piece from polyester resin and reinforced with glass mat. Not less than 30 percent (by weight) of the flume insert shall be reinforcement. The inside surface of the flume shall be completely smooth and free from surface defects. The thickness of the walls shall not be less than 1/4 inch. There shall be a sufficient number of locking clips to be an integral part of the liner to assure anchorage and correct alignment. Integral stiffeners shall be provided with sufficient structural strength to resist all the stresses that occur during the shipping and installation of the flume. The flume shall be designed for trouble free operation and to produce metering heads to within 2 percent of its published rating curve. The flume shall be installed true and level. All interfaces of the flume and the adjacent concrete shall be flush and provide a smooth, continuous surface. The Contractor shall furnish certified data, in the form of a curve or table, relating level to flow rate at 0.1 feet intervals.

13.6.22 Pressure Transmitters

A. Pressure transmitters shall be 2 wire devices with the following features: Continuously adjustable span, zero and damping adjustments, integral indicator scaled in engineering units, solid-state circuitry and 4-20 mA output. Accuracy shall be 0.25% of span. Process wetted materials and body materials shall be compatible with process solutions. Process connections shall be 1/4 or 1/2 inch NPT.

B. Pressure transmitters shall be Bristol Babcock Model 2408-10, Rosemount Model 1151GP, or LMSSC approved equal.

13.6.23 Temperature Transmitters

A. Temperature transmitters shall be 2 wire devices with the following features: Continuously adjustable span and zero adjustments, integral indicator, solid-state circuitry and 4-20 mA output linearly proportional to the specified temperature span. Accuracy including temperature element shall be +0.5 percent of span. The temperature sensor shall be a spring loaded platinum RTD with 316 SS thermowell.

B. The RTD and the thermowell length shall be as required or as shown on the drawings. The RTD and thermowell shall be directly mounted on the transmitter. The transmitter housing shall be weatherproof.

C. Temperature transmitters shall be Rosemount Model 444, Bristol Babcock Model 2408, or LMSSC approved equal.

13.6.27 Motor Control Centers

A. Motor Control Center Construction

1. Motor Control Center Construction shall be NEMA Class II, Type B and suitable for service on a grounded WYE System, but power supply and feeder circuits shall be 3 wire. The horizontal bus rating shall be 600 ampere minimum. The vertical bus shall be full-length, insulated, 300 ampere minimum. Each assembly shall consist of vertical freestanding sections, each approximately 90 inches high and minimum 20

inches deep. Each unit shall have an individual door with concealed hinges. Doors shall be held shut with captive screws. The door of each unit having a disconnect device shall be interlocked so that the door cannot be opened unless the device is in the "off" position and so that the unit cannot be energized when the door is open.

2. Each Motor Control Center shall be fitted with a manufacturer's nameplate which shall include the NEMA standard electrical rating and other pertinent data, including sales order number, date of manufacture and place of manufacture.

B. Magnetic Starter Units

1. Each Full Voltage Magnetic Starter Unit shall consist of a molded case circuit breaker in combination with a full voltage, non-reversing type starter with 3 relays, one in each phase. The short circuit protective device shall be a "Motor Circuit Protector" having low level sensing and a preventative to eliminate settings in excess of 1,300 percent of continuous rating adjustable with cover door closed. Overload trip elements shall be ambient temperature compensated with manual reset button. Trip elements shall be installed by the Contractor to suit the equipment installed. Contractor shall submit data sheets listing motor, motor circuit number, nameplate full load amperes, actual measured load current under normal load, catalog number of overload element, description of driven load and data of measurement. Magnetic starters shall have auxiliary contacts. The combination motor starters shall be draw out type for size 3 and below. The fixed-type unit assembly shall be so constructed that it can be easily removed from its panel after disconnecting the wires to the terminal block and withdrawing from the primary bus. Removal of a unit assembly shall be practicable without rear access and without disturbing any other unit in the motor central center.

2. Each starter unit shall have its own control power transformer; it shall have a 115 volt grounded secondary. One secondary fuse and 2 primary fuses shall be provided; unit control power transformers shall be sized to accommodate the control devices indicated. Local control devices shall be mounted independently of the cover door. All starters having automatic control shall have a local "red" running lamp and a "hand-off-remote" selector switch.

C. Preparation and Finish Systems

Motor Control Centers Enclosures shall be prepared and finished in strict accordance with the following standard and/or special requirements:

1. Indoor General Purpose Assemblies (NEMA 1) shall be prepared and finished using materials and methods of the manufacturer's standard finish system and colors, except that at least two coats shall be applied of the final finish.

2. Indoor Industrial-Gasketed Assemblies (NEMA 12) shall be prepared and finished using materials and methods of the manufacturer's standard finish system and colors, except that as many coats as necessary of the final finish shall be applied so that average dry film thickness of the total preparation and finish system shall be not less than 2 mils for a baked system or 3 mils for an air-dry system.

3. Outdoor Rain Tight Assemblies (NEMA 3R) shall be prepared and finished with a system which is suitable for an outdoor application in an area exposed to prevailing winds, blowing sand, as well as the deteriorating effects of prevailing corrosive conditions in an industrial waste water treatment facility.

4. The average dry film thickness of the preparation and finish system for outdoor assemblies shall not be less than 5 mils for a baked system or 7.5 mils for an air-dry system. Final finish of each outer enclosure shall be a color selected by LMSSC.

5. Shop drawings shall show compliance with all of the above requirements.

6. Any marks, scratches, or damage to any enclosure shall be touched up to the satisfaction of LMSSC using paint of the same type used on the original factory application. The manufacturer of the Motor Control Centers shall supply a one quart can of each final finish color used on the equipment supplied, and shall include instructions for its field application.

D. Lighting Panels

Lighting panels installed in Motor Control Centers shall comply with Section 5, Electrical Design Standards and NEC (latest adopted edition).

13.6.28 Recorder, Indicating Strip Chart

A. Indicator-recorders shall be approximately 6" W X 6" H X 20" D with a general purpose enclosure suitable for flush panel mounting. The recorder shall use a 4 inch strip chart with a minimum 30 day capacity. Both charts and indicator shall be scaled as required. Charts shall have time marks. The pen and indicator mechanism shall be servo operated and shall not use a clutch. Chart drive shall operate at a speed of approximately 1 inch per hour. The recorder shall be of solid-state design and have 1 fiber tipped pen. Accuracy shall be 0.5 percent of span. Input power shall be 120 VAC, 60 Hz. Integral alarm dry contact outputs and controls shall be furnished as required. Alarm contacts shall perform the functions as required.

B. A one year supply of charts and pens shall be supplied with each recorder.

C. Indicator recorders shall be similar to Fisher and Porter Series 51-1340, BIF MOD 257.

13.6.29 Totalizer and Integrator

A. Totalizer (counters) shall be electromechanical front panel mounting units with 7 (minimum) non-resettable digits. Size shall be approximately 2" H X 2" W X 2" DP. Character height shall be 0.150 inches, minimum.

B. Totalizers (counters) shall be Durant Series 7-y, Kessler - Ellis Type MK or LMSSC approved equal.

C. Integrators shall accept voltage/current flow input signals and shall produce output counts in appropriate engineering units. Multiplier units shall be indicated on the totalizer or be part of the nameplate. Output count rates shall be a minimum of 5 and a maximum of 50 counters per minute at maximum flow rate. Output span and zero shall be adjustable and accuracy shall be 0.1 percent of span. Units shall be surface or rack mounted. Input power shall be 120 VAC 60 Hz.

D. Integrators shall be Moore Industries Model LIT, AGM Electronics Model 4011 or LMSSC approved equal.

13.6.30 Proportional [-Plus-Reset] [-Plus-Derivative] Process Controller(s) Microprocessor Based

A. Proportional [-plus-reset] [-plus-derivative] process controller(s) shall be microprocessor based single loop controller(s). Unit(s) shall have front panel bar graph and/or digital indicators with scales in engineering units as shown or specified. Vertical process and set point bar graph indicators shall have an accuracy of at least 0.5 percent of span. Fully adjustable high and/or low process alarm set points shall be furnished as shown or specified. Alarm outputs shall be indicated on the front panel of the device. The unit(s) shall be suitable for operation for temperature variations of 40-120 degrees Fahrenheit and over a range of 10 to 90 percent relative humidity. Controller(s) shall operate on 120 VAC, 60 Hz. Power supplies, if required, shall be furnished. All accessories required for

adjustment of control parameters shall be furnished. Enclosures shall be nominally 3 inch by 6 inch suitable for separate or multiple panel mounting.

B. Process controller(s) shall include manual-automatic control selection, fully adjustable automatic control selection, fully adjustable proportional [-plus-automatic reset] [-plus-derivative] mode(s), bumpless transfer switching, set point control and indication, output high and low limiters, controlled variable and output signal indicating scales. Controllers shall accept 4-20 mA input signals and provide a similar resultant output signal. In the event of power loss, with a controller in either automatic or manual mode, all controller settings (i.e., set point, manual output, proportional band, reset, derivative, etc.) shall return to their last value after power is restored. Proportional band setting shall be fully adjustable from 3% to 500%. Controller(s) shall include manual increase-decrease push buttons. Reset (integral) rate shall be fully adjustable from 0-6 repeats per minute. Controller(s) shall include anti-reset wind-up feature and a reset disable feature. Derivative time shall be fully adjustable from 0.05 to 8 minutes. Controller(s) shall have the implemented capability for disabling the derivative function. Designated Controller(s) shall include a remote set point feature including a remote/local selector switch. Remote set point input signal shall be 4-20 mA.

C. Process controller(s) shall be Fisher & Porter Model 53MC1000, or LMSSC approved equal.

13.6.31 Control Loops

A. pH/ORP Monitoring

As illustrated in Figure 13.6.7, the pH/ORP Monitoring System shall include an analyzer, transmitter, recorder, alarms and remote indicator. The pH/ORP shall be monitored and the measurement transmitted to a recorder and a remote indicator. High and low signals shall activate an alarm.

B. pH/ORP Control System

In addition to the pH/ORP Monitoring System described above, the pH/ORP control system shall include a controller and signal isolators. The controller produces a signal proportional to the deviation from set point (reset and derivative capability also included). The control signal shall adjust the chemical metering pumps dosage rate. The control system loop diagram is illustrated in Figure 13.6.8.

E. Effluent Monitoring and Sampler

Specific ion analyzers shall receive continuous samples from the sample pump. The flow shall be measured by the liquid level above the weir. The flow transmitter signal shall control the composite sampler. The pH and ORP analyzers shall also be indicated and recorded.

F. Sump Pump Control

A on/off switch shall be provided for each pump. The sump pumps shall require manual operation of the pumps so that samples of the fluid can be taken before pumping occurs. The activation of the high level switch shall sound an audio alarm. The high-high level switch activates a remote alarm. Both pumps are disabled when the low-low level switch is activated. Refer to Figure 16.3.10

G. Mixer Control

The standard mixer motor control shall include a HS/SS station. A low level shutdown signal from the tank shall shut down the mixer. A running light shall be provided. Refer to Figure 13.6.11.

H. Flow Diversion/Recycle Control

The pH of the contents of the diversion tank shall be continually monitored. A pH measurement exceeding the discharge limit shall sound an alarm and start one of the diversion pumps. A low level switch shall be provided to automatically shutdown the pump(s) at low level. The flow rate from the diversion tank, the liquid level and the pH shall be indicated and recorded. Additional information is provided in Sections 13.5 and 13.7.

I. Flow Meter

As illustrated in Figure 13.6.12, the flow meter loop shall include the flow element, the flow transmitter, a local flow indicator, a remote recorder, a remote flow indicator and a remote flow totalizer.

J. Centrifugal Pump Control

The pump control loop diagram is illustrated in Figure 13.6.13. Local pressure gauges shall be provided on the suction and discharge lines. A high pressure switch and alarm shall automatically shut down the pump. Start/stop stations are provided at the receiving tank and at the pumps. An emergency stop hand switch and running lights shall also be provided. Logic low levels and sequencing controls shall also be incorporated into the controls scheme.

K. Metering Pump Control

As shown in Figure 13.6.14, the controller output signal shall be utilized to control the variable speed of the metering pump. A HOA switch and running lights shall also be provided. In the automatic mode, logic low levels and sequencing shall control the pump.

13.7 WASTE WATER DIVERSION SYSTEMS

13.7.1 Objectives

Identify discharge limitations, monitoring requirements and facility design considerations for waste water diversion systems.

13.7.2 Codes and Standards

The regulations listed below are the currently applicable regulations. Regulations change frequently, therefore, verify that no other regulations apply.

FS&O	Section 13.3, Underground Hazardous Material and Waste Storage Tanks
FS&O	Section 13.4, Aboveground Hazardous Materials and Waste Storage Facilities and Equipment
FS&O	Section 13.6, Waste Water Sampling, Control, and Monitoring Devices Design and Installation
LEED	Leadership in Energy and Environmental Design, US Green Building Council
40 CFR	Parts 260-267, 403, 433, and 469
Palo Alto	Chapter 16.09
Sunnyvale	Title 12
Santa Clara	Section 22

13.7.3 Design Parameters

A. During normal operation, the effluent from the treatment facility is routed through the pH monitoring tank and the final effluent tank before it is discharged to the sanitary sewer. As discussed in Section 13.5, the effluent is sampled and monitored at the final effluent tank to satisfy the discharge permit. To prevent excursions from the sewer agency's discharge limits, a diversion system is required. If the effluent does not satisfy the discharge limits, the waste water is recycled back to the treatment facility. The diversion system consists of a pH monitoring tank, a diversion tank, diversion pumps, transfer pump and mixing pumps. A schematic is included in Figure 13.7.1. The design parameters for the system are provided in Paragraphs B through J.

B. Site Layout/Access

Layout of the diversion system shall satisfy the applicable regulations of the UFC, National Fire Codes, as published by NFPA, and all local ordinances. Provision shall be made for equipment to be located as necessary to allow direct access by treatment facility personnel for routine operation, maintenance and replacement of mechanical equipment. Vacuum truck access to the diversion tank shall be provided.

C. Tank Sizing

The pH monitoring tank shall have a minimum residence time of 15 minutes at the design flow rate. The diversion tank shall be capable of storing at least 5 hours of the maximum waste water treatment flow.

D. Secondary Containment

Spill containment walls shall be provided as required by local, state and federal regulations around all process tanks, chemical storage tanks and equipment. Requirements presented in Sections 13.3 and 13.4 shall be followed.

E. Pump Sizing

1. Two diversion pumps shall be provided to transfer the contents of the diversion tank to the recycle tanks. Each pump's rated capacity shall match the design flow rate to the waste water treatment facility.

2. Two mixing pumps shall be provided to mix the contents of the recycle tanks. Each pump shall be capable of recycling the contents of the vessel in 4 hours.

3. To transfer the contents of the recycle tank back to the equalization facilities upstream of the treatment facilities, 2 pumps shall be provided. Each of the transfer pumps shall be sized to handle 100 percent of the waste water treatment facility's design flow rate.

F. Solids Removal

The diversion tank shall have an accessible man way (30 inch minimum) for vacuum truck clean out operations and personnel access.

G. Tank Fittings

The recycle holding tank shall include a level transmitter, man way, and high and low level alarms. A schematic of the tank is provided in Figure 13.7.2.

H. Tank Draining Considerations

The diversion tank shall be capable of draining completely.

I. Materials of Construction

The materials of construction for the diversion system equipment shall be suitable for the physical and chemical characteristics of the waste water being handled by the treatment facility.

J. Protective Coatings

The interior of all steel chemical tanks and waste water storage or treatment vessels shall be coated or lined with a compatible corrosion-preventive system as required in Section 4, Mechanical Design Standards.

13.7.4 Monitoring and Control

A. Monitoring and control is a major component of the diversion system. Please refer to the loop diagram, Figure 13.7.1 for an example of a diversion system control loop. Design standards for monitoring and control are provided in Paragraphs B through D.

B. pH

The contents of the diversion tank are continually monitored for pH. A pH reading exceeding the discharge limit activates an alarm and starts one of the diversion pumps. The pump is adequately sized to handle the entire waste water flow. Low pH readings also start the pump and activate an alarm. Local indicators with numbers located with an unobstructed view to an operator and remote pH indicators located in B/041, Service Request Center are to be provided. Additional on-line analyzers may be required depending upon the application and the corresponding discharge limits. Standards concerning the pH analyzer system are included in Section 13.6.

C. Flow Rate

The treated effluent flow rate is measured at the overflow weir in the diversion tank. The signal should be indicated locally and at B/041. Standards concerning this flow measuring device are included in Section 13.6.

D. Liquid Level

The liquid level in the diversion tank should be measured and indicated locally, and if specified by LMSSC, at a remote control panel (B/141). High and low level switches activate remote alarms. The low level switch also shuts down a diversion pump.

13.7.5 Health and Safety

A. Comply with the requirements of Section 7, O/9K92, ESH heritage standards and the requirements listed below:

B. OSHA Confined Spaced Requirements

Confined spaces are considered to be enclosures having limited means of personal entry or exit, by reason of location, size or number of openings; and unfavorable natural ventilation which could contain or produce dangerous air contaminants, flammable or explosive atmospheres, and/or oxygen deficiency. The multiple hazards associated with entrance and work in confined spaces are capable of causing bodily injury, illness or death. The safety precautions and guidelines presented in the following references shall be adhered to:

1. Title 8, California Administrative Code, Article 108 (Confined Spaces)
2. ANSI Z117.1-1977
3. NIOSH Criteria Document, "Working in Confined Spaces", December, 1979

4. NIOSH Alert, "Request for Assistance in Preventing Occupational Fatalities in Confined Spaces", January 1986
5. FS&O, Section 7, Safety Design Standards

Portable analyzers are to be used to measure the air quality of confined spaces within the diversion systems. Specifications for a combustible gas detection system is are included in Section 13.6.

C. Electrical Code Requirements

The diversion system shall conform to the current issue of all applicable city, county, state and federal codes and standards, Section 5 Electrical Design Standards, and LMSSC FS&O, Construction Specifications, Volume IV, Electrical.

D. Fire Code Regulations

The diversion system shall conform to the current issue of all applicable city, county, state and federal codes and standards, as included in Section 8, Fire Protection Design Standards.

13.8 CLOSURE AND CLEANUP OF CHEMICAL USE FACILITIES, AREAS AND EQUIPMENT

13.8.1 Objectives

Provide standards for the closure requirements for a facility, area, or system which has contained or used hazardous materials.

13.8.2 Codes and Standards

The closure and cleanup operation shall comply with the currently applicable references, standards and regulations listed below. Regulations change frequently, therefore, verify that no other standards or regulations apply.

CCR	26 CCR Divisions 22 and 23
DHS	Recommended Drinking Water Action Levels, April 1989
RWQCB	Leaking Underground Fuel Tank (LUFT) Field Manual
FS&O	Section 13.3, Underground Hazardous Material and Waste Storage Tanks
FS&O	Section 13.4, Aboveground Hazardous Material Storage Facilities and Equipment
O/9K2S	Site-Specific Cleanup Levels or ARAR's
40 CFR	Parts 260-267, 413, and 433
BAAQMD	Rules and Regulations: Regulations 2, 3, 6, 8, Rule 40 and 11
LEED	Leadership in Energy and Environmental Design, US Green Building Council
Palo Alto	Chapter 16.09 and Title 17
Sunnyvale	Title 12, Title 20, and Title 21
Santa Clara	Section 22

13.8.3 Closure Permitting

The permits required for the closure and/or cleanup operation shall be obtained from the appropriate governing agencies. Contact O/9K2S to obtain planning support for agency approvals before construction. O/9K2S will submit all required documentation to the agency(s) before, during, and after construction.

13.8.4 Coordination with LMSSC

Coordinate with LMSSC project manager during the duration of the project.

Organization 9H2S

Project Specifications
Project Management
and
Project Field Supervision

Organization 9K2S
Site Assessment
Permits
Negotiations with RWQCB, DHS, and City
Closure Plan

Organization 9K2S
Health and Safety Plan and
Manifestation and Disposal of Hazardous Waste

13.8.5 Closure Plans

A. Facility Equipment and Structures

A closure plan is required prior to removal or demolition of a facility that stores, handles, or generates hazardous substances or hazardous wastes as part of its business. Facility equipment refers to all components of a facility or its operations (i.e., structures, tanks, piping, etc.) that are utilized in the storage, handling, or generation of hazardous substances or hazardous wastes.

B. The closure plan will conform to regulations adopted by the administering agency having jurisdiction over operation of the facility. The procedures required for the development of a facility closure plan will depend highly upon the interaction with the administering agency. Additional local, state and federal regulatory requirements may have to be met during closure of the facility, depending upon the nature of hazardous substances or hazardous materials. Administering agencies that may become involved in the closure process include:

City
Local Fire Department
County
AQMD
RWQCB
DHS
EPA

C. In general, procedures for closure of a facility may require, but not be limited to, execution of the following:

1. Collect and compile background information on the facility for the following:

Description of facility
History of facility
Record of chemical use at facility
Record of operating permits and compliance
Meteorological conditions
Equipment inventory
Record of previous business operations at location of facility

2. The facility background information will assist in the determination of the level of effort required for the closure plan. As an example, operating permits and compliance records can be used to establish the basis for conformance of the facility closure plan with the administering agency and other regulatory agencies.

3. Perform a site assessment (investigation) to determine the extent of contamination at the facility. See Section 13.11 for site assessment requirements.

4. Some investigative procedures may be required at the site to confirm the presence (or absence) and extent of contamination to facility components and surrounding soils and underlying ground water.

5. Prepare, in writing, a facility closure plan that provides descriptions of:

   How the facility components will be closed
   Background information on the facility
   Methods and procedures used to remove or decontaminate facility components
   A schedule for closure of the facility
   Methods and procedures used to transport, treat, and/or dispose hazardous wastes removed from facility
   Additional information or activities, as required by the administering agency, to complete closure of the facility

6. Decontaminate facility components

   See Subsection 13.8.7, Decontamination Procedures.

7. Certify closure of facility with the administering agency.

D. Underground Storage Tanks (UST)/Piping

Local regulatory agencies (i.e., city fire departments) have regulations and guidelines for the closure of underground storage facilities. These locally enforced procedures for UST closures are found in Sunnyvale, Title 21, and Palo Alto, Title 17. These regulations and guidelines must be followed for each project. In addition, the LUFT Manual Section II provides general procedures. Applicable laws for UST closure are defined in Chapter 6.7 (Division 20) of the California Health and Safety Code. Applicable regulations are defined in 26 CCR Division 23, Underground Tank Regulations. General procedures for closure of USTs may require, but not be limited to, execution of the following:

1. Background Information

   Collect and compile background information to assist in the determination of the potential for soil contamination.

2. Development of methods and procedures used to determine if contamination to soils and ground water exists.

3. Prepare in writing, and submit to the administering agency, closure plan for USTs. The plan should provide descriptions of:

   Background information on the existing structures, utilities, piping, and USTs
   Methods and procedures used to close the USTs
   Methods and procedures used to determine the extent of contamination to soils and/or ground water
   Schedule for closure of the USTs

   Additional information or activities, as required by the administering agency to complete closure of the USTs.

E. Surface Impoundments

The closure procedures for surface impoundments are the same as described in Paragraph A of Subsection 13.8.5

13.8.6 Sampling and Analysis Requirements

A. Facility Equipment and Structures

1. Sampling of equipment and structures will be required to completely characterize the nature and extent of contamination, however sampling methods are not yet standardized. Variations of the wet-wipe and dry-wipe techniques that have been used in the field are described in the "Guide for Decontaminating Buildings, Structures, and Equipment at Superfund Sites" See Subsection 13.8.8.

2. Standard sampling techniques can be used to determine the presence of solid, liquid, or airborne contamination. Methods for sampling and analysis are described below:

B. Solid and Liquid Wastes

Test Methods for Evaluating Solid Waste. Physical/Chemical Methods. 2nd Edition. U.S. ESH Agency. U.S. EPA SW-846. 1980.

C. Airborne Contaminants

1. NIOSH Manual of Analytical Methods. 2nd Edition, Volumes 1-3. U.S. Department of Health, Education, and Welfare. DHEW (NIOSH) Publications No. 77-157A, 77-157B, 77-157C. 1977.

2. NIOSH Manual of Analytical Methods. 2nd Edition. Volume 4. U.S. Department of Health, Education, and Welfare. DHEW (NIOSH) Publication No. 78-175. 1978.

3. NIOSH Manual of Analytical Methods. 2nd Editions. Volume 5. U.S. Department of Health, Education, and Welfare. DHEW (NIOSH) Publication No. 79-141. 1979.

4. NIOSH Manual of Analytical Methods. 2nd Editions. Volume 6. U.S. Department of Health, Education, and Welfare. DHEW (NIOSH) Publication No. 80-125. 1980.

5. NIOSH Manual of Analytical Methods. 2nd Editions. Volume 7. U.S. Department of Health, Education, and Welfare. DHEW (NIOSH) Publication No. 82-100. 1981.

6. Adequate health and safety cautions (personal protective equipment) are required during sampling in accordance with the level of hazard encountered. Representative samples should be collected and analyzed in accordance with the quality control guidelines described in the above cited references.

D. Contaminated Soils

1. Sampling and analysis of soil are often required to determine the potential soil contamination that may have occurred due to facility operations related to the generation or storage of hazardous substances or hazardous wastes in USTs/piping and surface impoundments. Generally, no one sampling procedure for soil contamination is available. The proper procedure is dependent upon the specific processes and activities used at each site. The LUFT Manual, Section II b may be used to determine the protocol for additional sampling and analysis.

2. Once contamination with hazardous wastes is confirmed, the DHS Site Inspection Guidance Manual, Section III.A. Sample Plan Preparation 26 CCR Division 22 may be referenced for guidance in preparing a sampling plan.

E. Wet Process Areas/Chemical Waste Storage

1. Classification of soils as hazardous or non-hazardous may be done in accordance with Title 22 Article 11 Section 66693. Sample and sample management of wastes may be determined in accordance with the Title 22 Article 11 Section 66694. Sample results can be compared with toxicity criteria defined in Article 11 Sections 66696 through 66723 for classifying soil as non-hazardous or hazardous.

2. Underground Storage Tanks/Piping for Gasoline and Fuel Oil. Samples must be taken, analyzed, and categorized in accordance with procedures defined in Section II of the LUFT Field Manual where facilities were used to store or transfer gasoline and diesel fuel. The site is then classified as follows:

Category 1	No Evidence of Soil Contamination
Category 2	Suspected or Known Soil Contamination
Category 3	Known Ground Water Contamination

F. Additional Sampling Requirements

Soils which are classified as contaminated by definition of 26 CCR Division 22 Sections 66696 through 66723, or being contaminated as defined by description of Categories 2 through 3 in the LUFT Field Manual, may require additional sampling analysis. Section 3.1.2 of the California Site Mitigation Decision Tree Manual may be used to define the need for additional sampling. If Stage One indicates that no further sampling is required, the sampling program may be terminated, subject to approval by the RWQCB and/or DHS.

G. Sampling Plan Development

When additional sampling requirements are indicated, the "Site Inspection Guidance Manual for Federal Fiscal Year 1989", developed by DHS Site Mitigation Section, Site Evaluation Program for U.S. EPA Region 9, may be used as a guidance document for sample plan preparation.

13.8.7 Decontamination Procedures

A. Facility Equipment and Structures

A site-specific decontamination plan should be developed once the nature and extent of contamination has been determined. The decontamination plan may require, but not be limited to, execution of the following:

B. Hazard Evaluation

1. Evaluate the hazards associated with exposure to the contaminants by gathering information on the physical and chemical properties of the contaminants, the fire and explosion hazards, the toxicity and health hazards, and chemical reactivity. Determine all existing exposure limits for each contaminant. Exposure limits for chemical substances can be obtained from:

2. 29 CFR 1910

Technical Guidance for Hazards Analysis. Emergency Planning for Extremely Hazardous Substances. December 1987. U.S. EPA Federal Emergency Management Agency. U.S. Department of Transportation.

American Conference of Governmental Industrial Hygienists. Documentation of the Threshold Limit Values. American Conference of Governmental Industrial Hygienists, Inc. Cincinnati, OH. (Published annually).

C. Target Cleanup Levels

Determine target cleanup levels for equipment and structures. At present there are no standardized cleanup levels for contaminated equipment and structures from facilities which have contained or utilized hazardous materials or hazardous wastes. Different organizations that have set cleanup levels for similar circumstances include local and state health departments and Federal agencies such as those noted below:

EPA
NIOSH
OSHA
Center for Disease Control
Surgeon General's Office

Target cleanup levels will be site-specific and depend highly upon interaction with the administering agency.

D. Decontamination Methods

Determine the appropriate decontamination method or combination of methods to be used. This task is performed by evaluating the appropriate decontamination method or combination of methods in the form of a feasibility study. Refer to Table 13.8.7.1 for a sample listing of practical decontamination methods. Criteria used in evaluation of appropriate methods are:

Effectiveness
Equipment and support facilities required
Time to decontaminate
Worker health and safety requirements
Types of wastes generated
Treatment/disposal requirements of wastes generated
Structural damage
Cost

E. Worker Health and Safety Requirements

The design team shall ensure that the LMSSC requirements for a health and safety plan are conveyed to the Contractor for decontamination operations. Before commencing work, Contractors are required to have a written site safety plan which conforms to State and OSHA compliance guidelines, and which should be reviewed by O/9K2S before work begins. LMSSC requirements are spelled out in LMSSC ESH heritage Standard 6.21. Contractor site safety plans must meet the OSHA standard for hazardous waste operations which are listed in 29 CFR 1910.120, and also construction safety requirements listed in Title 29, CFR 1926 (U.S. Department of Labor, Safety, and Health Regulations for Construction), and CCR Title 8, Construction Safety Order.

F. Decontamination Plan

Prepare, in writing, a site-specific decontamination plan that provides a description of:

Chemical contaminants of concern
Target cleanup levels for chemical contaminants
Methods used to monitor effectiveness of decontamination
QA/QC procedures to be followed
Equipment and support facilities required
Method or waste or residue disposal
Worker health and safety requirements

Schedule for decontaminating the facility

G. Initiate Cleanup

Initiate decontamination of facility. Contaminant levels should be monitored throughout the cleanup operation so that decontamination effectiveness can be evaluated.

H. Sampling Survey

Conduct a visual inspection and sampling survey to document the effectiveness of decontamination. Compare sampling results with target cleanup levels to assure cleanup is effective.

I. Contaminated Soils

A site-specific decontamination plan for soils should be developed and may require, but not be limited to, execution of the steps listed below. Guidance for each of these steps are given in Paragraphs J through P of this Section.

J. Risk Assessment For Contaminated Soil

Perform a baseline public health risk assessment of contaminated soil at the facility in order to provide a framework for developing risk information necessary to assist decision making for decontamination (remediation). Guidance documents appropriate for conducting risk assessments for soil contamination are:

Risk Assessment Guidance for Superfund, Human Health Evaluation Manual; Part A: External Review Draft. July 1989. EPA Office of Solid Waste and Emergency Response. Washington D.C.

California Site Mitigation Tree Manual. May 1986.

K. Target Cleanup Levels For Contaminated Soil.

Develop target cleanup levels for soil. The state of California employs a health-based risk assessment strategy for developing AALs for soil. Cleanup levels, in turn, are developed from the AALs. Setting cleanup levels will depend upon interaction with the administering agency. Guidance appropriate for developing soil cleanup levels are:

California Site Mitigation Tree Manual. May 1986.

The Development of Applied Action Levels for Soil Contact: A Scenario for the Exposure of Humans in a Residential Setting. Final Draft. December 1987. DHS Toxic Substances Control Division.

L. Feasibility Study For Contaminated Soil

Perform a feasibility study to identify appropriate technologies and process options applicable to soil decontamination at the facility. Evaluate technologies and process options against standardized criteria in order to compare and select the preferred alternative(s) for soil remediation. Guidance documents appropriate for conducting feasibility studies for soil contamination are:

Guidance for Conducting Remedial Investigations and Feasibility Studies Under CERCLA. Interim Final. October 1988.

California Site Mitigation Tree Manual. May 1986.

M. Worker Health and Safety Requirements For Contaminated Soil

Determine the worker health and safety precautions required during decontamination operations. Information required includes:

Personnel training
Medical surveillance
Personal protective equipment
Site safety requirements

Prepare a health and safety plan to support the cleanup efforts that conforms to state and OSHA compliance guidelines. Specific information required in the health and safety plan is listed 29 CFR 1910.120.

N. Remedial Action Plan For Contaminated Soil

Develop a remedial action plan to assist the remedial design and remedial action for soil contamination. The purpose of the remedial action plan is to assemble and analyze all existing information in order to identify, prepare a preliminary design of, and develop a comprehensive schedule for implementing a remedial action plan. Guidance documents appropriate for developing a remedial action plan for soil contamination are:

Superfund Remedial Design and Remedial Action Guidance (Revised). June 1986. EPA Office of Emergency and Remedial Response. Washington D.C.

California Site Mitigation Tree Manual. May 1986.

O. Initiate Cleanup For Contaminated Soil

Initiate cleanup in accordance with the Remedial Action Plan. Perform monitoring of soils to ensure that remedial action objectives are being achieved.

P. Sample Survey For Contaminated Soil

Conduct a visual inspection and sampling survey to document the effectiveness of remedial action. Compare sampling results with target cleanup levels to assure cleanup is effective.

13.8.8 Applicable Guidance Documents for Closure and Cleanup

Applicable guidance documents and regulations that may assist, or apply, in the preparation of closure plans and cleanup of a facility that stores, handles, or generates hazardous wastes or hazardous substances as part of its business are:

A. Guidance for Conducting Remedial Investigations and Feasibility Studies Under CERCLA. Interim Final. October 1988. EPA/540/GF-89/004. U.S. EPA Office of Emergency and Remedial Response. This RI/FS document provides guidance for characterizing the nature and extent of risks to human health and the environment posed by uncontrolled hazardous waste sites and for evaluating potential remedial options.

B. The California Site Mitigation Decision Tree Manual. May 1986. State of California Department of Health Services, Toxic Substances Control Division. This document provides guidance on investigative procedures for determining the extent of contamination at toxic waste sites and a strategy for appraising the risk to human health and the environment from the contamination. This document was developed concurrently with the U.S. EPA RI/FS document and is applicable only to the State of California.

C. Guide for Decontaminating Building, Structures, and Equipment at Superfund Sites. March 1985. EPA/600/2-85/028. U.S. EPA Hazardous Waste Engineering Research Laboratory.

This document provides a strategy for determining the nature and extent of contamination; developing a site-specific decontamination plan; and decontaminating buildings, structures, and equipment at hazardous waste "Superfund" sites.

D. Leaking Underground Fuel Tank (LUFT) Field Manual. Guidelines for Site Assessment, Cleanup, and Underground Storage Tank Closure. May 1988. This document provides guidance to regulatory agencies responsible for dealing with leaking fuel tank problems.

E. 40 CFR 264.

Section 100. Corrective Action Program for Releases from Solid Waste Management Units.

Section 110-120. Closure and Post-Closure Standards for Owners and Operators of Hazardous Waste Treatment Storage, and Disposal Facilities.

Section 228. Closure and post-closure care for surface impoundments.

F. Title 26, California Code of Regulation, Article 22.

Sections 67210 through 67220. Closure and post-closure for interim status and permitted facilities.

Sections 67240 through 67248. Use and management of containers.

Sections 67250 through 67262. Tanks at interim status and permitted facilities.
Sections 67280 through 67318. Surface impoundments at interim status and permitted facilities.

13.9 SOIL FILL MATERIAL QUALITY STANDARDS

13.9.1 Objectives

This section provides guidance for determining acceptable chemical concentrations in native or imported backfill. This section also identifies reference sources for data required to calculate the chemical concentrations.

13.9.2 Codes and Standards

Imported and native backfill shall comply with the codes and standards listed below. Verify that no other standards or regulations apply and that the most recent version of the codes and standards are used.

DHS	Recommended Drinking Water Action Levels, January 1990
CCR	Division 22, Primary and Secondary Drinking Water Standards
California	LUFT Field Manual
LEED	Leadership in Energy and Environmental Design, US Green Building Council
Dragun	The Soil Chemistry of Hazardous Materials; Hazardous Materials Control Research Institute; 1988
O/9K2S	LMSSC FS&O Construction Specifications
O/9K2S	Site-Specific Cleanup Levels

13.9.3 Closure or Cleanup Related Soil Fill

Contact O/9K2S if the project is a closure or cleanup of a chemical use area. Organization 9K2S will provide acceptable chemical concentrations for backfill.

13.9.4 Support During Planning

O/9K2S will also provide planning support before construction and forward any required documentation to the agency(s) during the life of the project.

13.9.5 Construction Specification Compliance

All native and imported backfill shall comply with LMSSC FS&O Construction Specifications, Section 031 00 00, Earthwork. The concentration of chemicals in all backfill shall not exceed cleanup levels for location where site-specific cleanup levels are established.

13.9.6 Fuel Tank Soil Fill

All native and imported backfill shall comply with soil quality consistent with the LUFT Manual.

13.9.7 Sorption Factors

Sorption factors shall comply with Table C-4 of the Federal Register, Volume 51, No.114, June 13, 1986. If no sorption factor is given in Table C-4 for a chemical, then Table 4.2 and 6.3 of The Soil Chemistry of Hazardous Materials, J. Dragun, 1988 shall apply. Use the lowest value in Table 4.2.

13.9.8 Laboratory Analysis

Backfill sample analysis shall comply with EPA SW 846 methods. The supplier shall provide LMSSC with laboratory analysis reports certifying that all imported backfill meets LMSSC chemical concentration requirements before this fill material is brought on site.

13.10 TEMPORARY SEWER CONNECTION REQUIREMENTS STANDARDS

13.10.1 Objectives

This section provides standards for connecting waste water discharges from construction sites to sanitary sewers. The guidance covers domestic and industrial/exceptional waste discharges.

13.10.2 Codes and Standards

Temporary sewer connection shall comply with the references, standards and regulations listed below:

Milpitas	Title 8, Chapter 2
Palo Alto	Chapter 16.09, Ordinance 3889, Sewer Use Ordinance
Sunnyvale	Title 12, Chapters 12.04, 12.08, 12.12, 12.16, 12.18, 12.40
Santa Clara	Chapter 23 of City Code, Sewers and Sewage Disposal
San Jose	Title 15, Chapter 15, 12, Sewers

13.10.3 Notification Within LMSSC

A. All temporary sewer connections, regardless of the expected duration, shall be reported to O/9K2S. Contact O/9K2S for discharge permit application forms. Complete all technical information required in the application such as: expected flow rate, expected chemical content of discharge, location of connection point and planned monitoring and controls. The Contractor shall also contact O/9K2S for information about the chemical quality of ground water for projects that require dewatering.

B. Contact O/9H2S for facilities drawings indicating the locations and elevations of sewer and other buried utilities within the area of the project. Verify the depths and locations of the sewer and other utilities.

13.10.4 Permit Requirements

A. The temporary sewer connection shall meet the requirements of the regulations listed in Subsection 10.13.2. All wastes discharged via the connection shall meet the chemical discharge limitations listed in the referenced regulations. Select a treatment process for waste water exceeding discharge limitations that will produce effluent from the treatment unit that complies with applicable discharge limitations; dilution of a waste stream to meet discharge limitations is prohibited. The treatment process shall include unit operations for handling waste solids or hazardous waste generated by the treatment process.

B. Stored Liquid Wastes

All discharges of domestic waste collected in septic tanks or chemical toilets shall comply with sewer agency requirements where the discharge will occur. Sewer agencies typically require the discharger to secure a trucker's permit from the agency. The agency may require analysis of the waste before approving the discharge.

C. General Discharge Limitations

Discharge limits vary from agency to agency. In general, the discharge limitations in permits restrict the quantity of heavy metals, solvents, cresols, cyanides, radioactivity, phenols, pesticides, oil and grease discharged to the sewer. These limitations apply to domestic and industrial/exceptional discharges. Sewer agencies also restrict the physical characteristics of waste water discharges including total flow volume per day, pH, temperature, maximum of solids, waste streams with explosive emissions, odor and color. The agencies also reserve the right to deny a discharge permit for a waste stream that will adversely affect the performance of the local sewer system or a stream that will cause the local sewer treatment facility to violate its NPDES permit, even if the stream meets all the discharge limitations referenced in Subsection 13.10.2. Sewer agencies reserve the right to deny discharges into the sanitary sewer if the flow capacity of the sewer system or sewer agency treatment plant has been completely allocated.

D. Monitoring and Sampling Requirements

All industrial/exceptional waste water sewer connections shall have flow rate monitoring and sample collection facilities that comply with regulations of the sewer agency with jurisdiction. All monitoring and sampling facilities constructed shall also meet the following FS&O Design Standards: Underground Hazardous Materials Storage Facilities, Section 13.3; Aboveground Hazardous Materials Storage Facilities, Section 13.4; Waste Water Pretreatment Facilities, Section 13.5; Waste Water Sampling, Control and Monitoring Devices, Section 13.6; and Waste Water Diversion Systems, Section 13.7. Sample collection procedures shall comply with the governing agency's requirements. Laboratories performing the analysis of samples shall be approved by O/9K2S.

13.10.5 Other Requirements

All temporary connections shall comply with Section 1, Civil Design Standards. A hydraulic profile drawing is not required. Temporary connections used for 3 months or less may be constructed above grade. Temporary connections constructed above grade shall have a minimum slope S= 0.02. Locate sewer connections at existing valve boxes where possible. Temporary connections, no longer than 6 months in duration, shall not enter a manhole unless a variance is applied for and received through O/9K2S.

13.11 BUILDING SITE ASSESSMENT REQUIREMENT FOR NEW FACILITIES OR LEASES

13.11.1 Introduction

A. Purpose

The purpose of a building site assessment is to document activities that demonstrate that has taken all of the practical steps necessary to prevent and avoid liabilities for environmental action through purchase, lease, sublet or lease closing of real estate.

B. The scope of a building site assessment is to collect and examine practically available and relevant data and information about a site and its neighborhood in a systematic and cost-effective manner so that a determination can be made as to the environmental risk associated with the building site.

C. This Standard applies to building site assessments for:

New lease or purchase of office sites (Phase I)
Purchase or lease of hazardous materials handling operations (Phases I and II)
Purchase or lease of known or suspected contaminated sites (Phases I and II)
Lease close out of desk ad board facilities (Phase I)
Lease close out of known clean areas (Phase I)
Lease close out of chemical handling operations (Phases I and II)

D. In general, Phase I assessments will be required for lease of office sites and known clean areas, as well as for lease close out of desk and board (or office) facilities and lease close out of known clean areas; and a more rigorous two phase assessment (Phases I & II) will be required for all other building sites covered under this Standard. These Standards are applicable also to the lease close out of building sites. Even though a building site may be thought to be "clean," it is prudent to sample soil, ground water and perhaps selected portions of the building upon lease close out to establish background levels to preclude future concerns about liability. Due consideration should be given to conducting at least a partial Phase II assessment to fully evaluate the environmental liability associated with the site.

E. Checklists of tasks for the types of building assessments listed below are available from LMSSC. Property assessors shall complete the checklist that is appropriate for the type of property being assessed and return the completed checklist to the LMSSC Project Manager.

13.11.2 General Instructions and Requirements

A. There are four primary sources of information about a building site:

Documents-regulatory, site and legal records
Visual observation of the building site and surroundings
Interviews with persons having first hand knowledge of the building site, such as present and past employees, neighbors and regulatory personnel
Qualitative and quantitative analytical data

B. The degree to which each is examined and pursued will have a direct effect on the quality and quantity of the information available on which to make the assessment.

C. It is important that only factual data and information be recorded and used in the assessment.

D. It is imperative that the assessment team be composed of qualified personnel,with the qualifications being dictated by the specific needs of the particular assessment. While each building site can be unique, there will be certain fundamental elements common to all of the assessments.

E. At a minimum,the team should have a member knowledgeable of local, state and federal regulations; one who has the professional training and background in the sciences required for the specific site assessment (civil, chemical engineering, geology, hydrology, etc.) and

one who is trained and experienced in conducting assessments and audits. It is desirable but not necessary for one of the members to be a California REA.

F. The data and information gathered should be compiled in a neat and orderly fashion for review and analysis by the LMSSC assessment team.

G. One of the keys to a successful assessment is pre-assessment planning. All of the individuals necessary for the assessment should be identified as early as practical, with a commitment from each to the assessment.

H. A project plan must be developed with a clear statement of objectives, tasks, procedures and schedule for the assessment.

I. Other required resources, i.e., vehicles, personal equipment, change for copying, etc., should be identified with the team member assigned responsibility for securing each of the required resources.

13.11.3 Elements of the Assessment

A. There are two phases to building site assessments :

Phase I Data and information gathering and review
Phase II Site exploration

B. An assessment is typically conducted sequentially in phases, with Phase I always being implemented and Phase II implementation based on information and data discovered during Phase I, the complexity of the site and surroundings, and the specific needs and requirements of LMSSC. Generally, Phase II will be conducted for building sites which are known or suspected to be contaminated, chemical handling facilities and sites that are being considered for purchase.

13.11.4 Phase I Assessment Elements

A. Visual Inspection of the Site and Vicinity

The purpose of a visual inspection of the building site and surrounding neighborhood is to determine whether there are or have been releases to the environment by gathering as much information as possible about the physical and biological characteristics, and appearance of the site and area. Key tasks of this element are:

1. Identify adjacent site use in all directions. Note whether or not current or prior uses reveals the storage, use or manufacture of hazardous or extremely hazardous materials. Refer to 26 CCR Section(§) 22-66680; Section 8-339 and Section 22-12000 (Proposition 65).

2. Identify sites that have the potential to impact the subject site. Include sites identified in Subsection 13.11.4.A.1 and those that have or have had releases or emissions to the environment as evidenced by stains, odors, abnormal growth of vegetation and other observations that indicate the presence or potential presence of contamination.

3. Identify sites that require regulatory review. Include those sites identified in the preceding two elements. Regulations, in general, to be reviewed include:

40 CFR
26 CCR
Sunnyvale Title 20
Palo Alto Title 17
Santa Clara Valley Water District (SCVWD) Regulations

B. Site History Review

The purpose of the site history review is to learn as much as practical about the past utilization of the building and grounds to determine whether there have been past operations, practices or procedures that would reveal that contamination has taken place or had the potential to take place.

1. Identify, in reverse chronological order, past uses of the property through review of building permits and title reports. Record uses that would involve the use or storage of hazardous materials (refer to Subsection 13.11.2) and the generation and storage of hazardous waste (26 CCR § 22- 66470 - 66515).

2. Uses include, but are not limited to, metal finishing, printed circuit board manufacturing, cleaning and degreasing operations and waste water treatment; as well as chemical blending and manufacturing. The names of prior occupants and dates of occupancy should also be recorded.

3. Review historical aerial photographs to note development of and changes to the site and area. Observe for pits, ponds and lagoons, drum storage and burial areas, tank farms (diked or undiked), incinerator or stacks; all of which could indicate the potential for soil or ground water contamination. Aerial photographs can be obtained from Pacific Aerial Surveys, as well as from LMSSC records.

4. Review records, permits and development plans for the site to confirm compliance with applicable regulations.

5. Review Sandborn Insurance and USGS maps to observe surface drainage, flood plain, and development of the site and surrounding area. Maps are available from the USGS and the University of California Main Library Map Room.

6. Interview persons knowledgeable about the site to obtain an understanding of the uses, operations, practices and procedures used at the site that are probably not found in the records.

7. Identify deed restrictions through a title and deed search at the Santa Clara County Recorders and Assessors offices. CA SB 245 requires that the seller of property notify the buyer that hazardous substances are on or beneath the property.

8. Identify information and data from this section that indicates potential impact on the site.

C. On Site Audit

The purpose of the on site audit is to inspect and observe first hand the actual site, operations, practices and procedures in order to assess the potential for contamination, and to examine site records to assess compliance with regulatory requirements. Key tasks are:

1. Identify in detail, the current use of and activity on the site and grounds. Operations and activities should be identified by name and location. A current map and plot plan of the site and operation should be prepared if one is not already available.

2. Items to be identified include, but are not limited to:

   Buildings numbers, size, location, age
   Utilities-identify type (i.e., gas, electric) and method of supply (above or below ground)

Tanks and vessels - purpose, size, contents, condition, evidence of leaks, overfill protection
Manholes, catch basins drains, equipment and electrical sumps location, use, appearance, odors
Disposal areas-purpose, size, contents, hazardous waste, lined, containment
Pits, ponds and lagoons - purpose, location, size, construction (lined, unlined)

3. Identify potential issues of concern (i.e., odors, discolored soil, abnormal growth or absence of vegetation, pits, ponds, lagoons, drum storage areas, waste storage areas) that could indicate the presence of or potential for contamination.

4. Identify use of transformers and examine records for possible PCB use. Examine in service PCB containing transformers and look for leakage. Examine PCB inspection and disposal records. PCBs are regulated by TSCA 40 CFR Part 761.

5. Examine for the presence of asbestos insulation and flooring and/or ceiling construction. Asbestos use is regulated by the TSCA 40 CFR Part 763 and the BAAQMD Regulation 11, Rule 2.

D. On Site Audit For Hazardous Materials Handling Operations

1. In addition to the tasks described in Paragraph C above, the auditor shall identify and review records of current use, handling, storage and disposal of hazardous materials. Records to be reviewed include, but are not limited to:

Operations
- process flow charts
- raw material lists

Proposition 65 lists
Tanks
- number, size, location
- contents
- underground tank registration
- inventory report
- leak detection system employed and system check records

Piping and Pumps
- condition, evidence of leaks, corrosion

Waste water
- NPDES permit
- Santa Clara Valley Water District permit
- discharge reports

Air
- permit from BAAQMD
- monitoring reports
- notice of violation

Air Toxic Hot Spots Emission Inventory Report (26 CCR §17-93300 - 94134)
Waste Management
- EPA generator number
- waste manifests
- generators annual reports
- waste discharge permit - RWQCB

Hazardous Materials Management Plan as required by the California Health and Safety Code, Division 20, Chapter 6.95 and by Title 20, and Title 21 Sunnyvale Municipal Code and Title 17 in Palo Alto
Waste discharge permit - RWQCB

2. Identify permit type and status for each of the items in the preceding section. Ascertain that the permits are current or that an application for renewal has been filed.

3. Identify compliance status. Examine the files to identify notices of non-compliance from the following regulatory agencies:

   SCVWD
   Cities of Sunnyvale, Palo Alto, Milpitas, San Jose, and Santa Clara Fire Departments
   California DHS
   RWQCB
   BAAQMD

4. For each notice of non-compliance, note the impact (or potential impact) of the violation on the environment, the action taken or planned to correct the deficiency and the schedule for completion.

E. Regulatory Review

The purpose of the regulatory review is to check regulatory agency records of permits, enforcement actions, and compliance programs to assess the site's compliance with regulatory requirements which can be used as a measure of the environmental soundness of the operation and site.

1. Agencies to be contacted include:

   SCVWD
   Cities of Sunnyvale, Palo Alto, Milpitas, San Jose, and Santa Clara Fire Departments
   DHS
   RWQCB
   BAAQMD

2. Review records pertaining to the site (permits, compliance actions and orders) and record:

   Type of permit required and date of issue/renewal and issuing agency.
   A chronology of compliance actions with a description of the deficiency and an assessment of the environmental impact on the site and the potential for affecting off site facilities.
   Action taken to correct the deficiency and the schedule for accomplishment.

3. Review records of appropriate neighboring sites as identified in the site audit and neighborhood inspection. Repeat the actions as stated in the preceding task.

4. Review Agency Lists

   Review the following agency lists to determine the presence of the site or neighboring sites on the lists:

   EPA-NPL
   EPA CERCLIS
   DHS-Expenditure Plan for Hazardous Substances Cleanup Bond Act of 1984
   Hazardous Waste and Substances Site List - State Office of Planning and Research
   RWQCB-South Bay Site Management System Milestone Report
   RWQCB - Fuel Leak Case List
   RWQCB - General Waste Discharger List
   AB 1803 - Contaminated Wells
   SCVWD List
   Sunnyvale, Milpitas, San Jose, Santa Clara, and Palo Alto Fire Departments
   Underground Storage Tank List

5. Identify sites on Agency Lists (EPA, DHS, RWQCB, SCVWD, BAAQMD, and local fire departments) within 1 mile of the site which could impact the site.

F. Survey Geologic and Hydrogeologic Conditions

The purpose of this task is to characterize the geologic and hydrogeologic conditions at the site and its surroundings to assess the potential contamination migration to or from the site. Key tasks are:

1. Identify geologic conditions of the area and soil type at the building site. This information is available from sources such as:

   USGS reports quadrangle scale
   RWQCB and DHS files
   SCVWD well logs
   South Bay Toxics Registry

2. Identify pertinent data and information in geotechnical reports. Pertinent factors include:

   Soil description
   Moisture content
   Penetration rate
   Porosity
   Permeability
   Grain size distribution
   Expansive soils
   Lithology
   Stratigraphy

3. Identify hydrogeologic conditions:

   Depth to first water bearing unit
   Depth to other water bearing units
   Probable gradient in each of the water bearing units
   Identify designated use(s) of the ground water
   Identify ground water wells within 1 mile of the site

4. Identify known impairments to the ground water based on documented analysis of well in the area. Provide a map with the locations of the site and the areas of contamination identified.

G. Phase I Report

The Phase I report should summarize the findings and observations, and present conclusions regarding the potential for on site contamination and for possible impacts of off site contaminant sources. Key elements of the Phase I report are:

Scope of Work	a clear, concise description of the work
Site Plan	define the site and surroundings
Regional Map	identification of actual and potential off site sources of contamination
Site History	
Regulatory Overview	of the site and off site locations that do or have the potential to impact the site

Potential on site sources of contamination
Potential sources of off site contamination
Statement of unknowns, limitations and uncertainties

Recommendations one possible recommendation is for a Phase II assessment to obtain additional data

13.11.5 Elements of Phase II Assessment

A. The purpose of a Phase II assessment is to quantitatively and qualitatively document soil and/or ground water conditions on site and/or near off site potential sources or areas of suspect contamination from past activities. There are 3 tasks that are common to all tasks in the Phase II assessment:

1. Prepare a Sampling and Analysis Plan, along with a Health and Safety Plan, to specify the procedures to be followed.

2. Select a qualified laboratory to perform the required analysis. Lab must meet the approval of LMSSC.

3. Select a driller which meets the approval of LMSSC to implement the sampling task.

B. Soil Exploration and Sampling

The purpose of this task is to identify areas of concern for sampling and analysis of the sample to qualitatively and quantitatively identify the presence (or lack) of contaminants in the soil. Key tasks are:

1. Identify areas of concern for sampling. Areas are to be selected based on the Phase I assessment. Typical areas include:

   Near or around stains, surface spills
   Drum storage areas - former and active
   Ponds, sumps, pits, lagoons, basins
   Fill areas, waste piles
   Chemical areas - process, storage and handling areas
   Abnormal vegetation growth
   Underground storage tanks
   Aboveground storage tanks

2. Identify the analyses required and analytical methods acceptable to the appropriate agencies. Typically, soil will be analyzed for metals, volatile base/neutral/acid hydrocarbons, organo lead, benzene, toluene, xylenes and ethylbenzene and petroleum products. Methods are found in the following references:

   LUFT Field Manual
   40 CFR Parts 260 and 261
   26 CCR § 22-66680 - 66746

3. Statistical treatment of the data may be necessary to determine the significance of the data.

C. Ground Water Evaluation

1. Identify the location of the sampling/monitoring wells based on data and information gleaned from the Phase I assessment, 13.11.2.5 Survey of Geologic and Hydrogeologic Conditions. Please refer to Section 13.12, Ground Water Well Design and Installation Standards. It is prudent to follow the NCP 300.430 and the TEGD in selecting the number and location of wells.

2. In some cases, monitoring wells may already exist either on the site in question or on adjacent property. The assessment Team Leader or Hydrogeologist on the team will

assess whether or not the existing wells will be suitable for the assessment, or whether new monitoring wells will be required.

3. Specify the contaminants to be analyzed and the acceptable analytical procedures. Typically, ground water will be analyzed for metals, volatile and purgeable hydrocarbons, and petroleum products. The following regulations should be checked:

   40 CFR\Parts 260 and 261, and Part 141
   26 CCR § 22-66680 -66746
   26 CCR § 22 -64435 - 64444\
   SDWA\- MCL (Maximum Contaminate Levels) Federal Register 53-FR 1892, January 22,1988 & 52-FR 25720, July 8, 1987
   Contact the DHS for the current proposed SAL

4. Evaluate the data opposite ARARs and identify those contaminates that will or have the potential to require cleanup.

D. Surface Water Sampling

1. Identify areas to be sampled based on the results of the Phase I On Site Audit Subsection 13.11.2.3.\Typical areas to be sampled are:

   Ponds and streams
   Drainage ditches and sumps

2. Select the desired analysis as in Subsection 13.11.3.2 and Section 3.3.

E. Asbestos Sampling

1. Check the following agency regulations to determine the\procedures to be followed in sampling asbestos:

   BAAQMD Regulation 11, Rule 2
   OSHA 29 CFR Part 1910.1001; Part 1926
   EPA 40 CFR Part 763

2. Analyze the samples using the McCrone Method (see 26 CCR § 17-94138).

F. PCB Sampling

The purpose of this task is to determine whether the transformers on site contain PCBs and whether the soil around the transformers has been contaminated with PCBs. PCBs are regulated by\the TSCA and are classified as an extremely hazardous waste in California (See 26 CCR §22-66680).

G. Building Samples

The purpose of this task is to sample suspect areas in the building to confirm the presence or absence of contaminants. Key tasks are:

1. Select areas or equipment to be sampled based on the information gained from the Phase I On-Site Audit, Subsection 13.11.2.3. Typically, items that will be sampled are:

   Vents
   Hoods and vacuum systems
   Floor drains, inside trenches and sumps
   Areas where cleaning and degreasing operations were performed

Operational areas where there is evidence of spills and leaks.

2. Identify the analysis desired for each sample based on the known or suspected contaminants used or present in the area and have the samples analyzed. Evaluate the analytical data opposite the regulatory requirements as in Subsection 3.11.3.2 through Section 3.6.

H. Phase II Report

1. The Phase II report should clearly present the data developed and the conclusions regarding the evidence from on site contamination and possible on site and off site sources. All supporting data and information such as boring logs, well logs, analytical data and any calculations should be included in the report.

2. Recommendations for additional actions such as additional sampling or development of remedial action scenarios for cost evaluation should be included. Key elements of the Phase II report are:

3. Scope of Work

4. Assessment of Contamination in:

   Soil
   Ground Water
   Surface waters
   Building and internals

5. Sources of Contamination

6. Regulatory Compliance Requirements - define the applicable levels of contamination acceptable under the appropriate regulations

7. Impact on Site Use

8. Mitigation Measures - Identify technically feasible, economically viable and environmentally acceptable remediation measures, along with order of magnitude cost estimates, if appropriate to the assessment.

9. Conclusions and Recommendations

10. Appendices

    Laboratory analytical data
    Photographs and diagrams
    Boring logs
    Well logs
    Record of interviews
    Copies of appropriate regulatory records
    References

13.12 GROUND WATER WELL DESIGN AND INSTALLATION STANDARDS

13.12.1 Objectives

A. There are several objectives when designing and installing ground water wells. Two objectives apply to the design and installation of all wells:

1. Provide equipment and documentation that complies with all local municipal, SCVWD, RWQCB, DHS and EPA guidelines and regulations, as appropriate.

2. Provide long-lasting equipment that requires a minimum of maintenance.

B. There are also specific objectives for different types of wells, depending on the purpose of the well installed. Additional objectives for common well types are listed below:

1. Monitoring Wells

Provide equipment for collecting a representative sample of the contaminated water-bearing zone.

2. Extraction Wells

Provide equipment appropriate for extracting the yield of the water-bearing zone.

3. Well Abandonment

Provide long-term protection for the future use of ground water and eliminate a potential for physical hazard.

13.12.2 Codes and Standards

The design and installation of ground water wells shall comply with the references, standards and regulations listed below. Verify that no other standards and regulations apply.

ASTM D 2487 - 85	Unified Soil Classification System for Engineering Purposes
ASTM D 2488 - 84	Description and Identification of Soils (Visual-Manual Procedure)
Driscoll Driscoll, Fletcher G.;	Ground Water and Wells, 2nd Edition; Johnson Division, St. Paul, Minnesota; 1987
DWR Bulletin 74-81	Water Well Standards: State of California
DWR Bulletin 74-88	Monitoring Well Standards: State of California
EPA - OSWER 9950.1 RCRA	Ground Water Monitoring Technical Guidance Document (TEGD), September 1986
LEED	Leadership in Energy and Environmental Design, US Green Building Council
O/9K2S	Available geotechnical and/or ground water investigation reports for areas within LMSSC
FS&O	Subsection 13.17.3
Freeze and Cherry, Freeze,	Groundwater; Prentice-Hall, Inc.; 1979 R. Allen and Cherry, John A.;
SCVWD	Ground Water Monitoring Guidelines, August 1985, March, 1989
SCVWD	Standards for the Construction and Destruction of Wells and other Deep Excavations in Santa Clara County, July 1989
EPA SW 846	Test Methods for Evaluation Solid Waste, Volumes I and II, 3rd Edition; EPA, 1986 (or most recent update)

13.12.3 Common Well Design Criteria

A. The references, standards and regulations listed above contain criteria for design and installation of ground water wells. All wells installed shall also meet the minimum criteria below. Drilling contractors for installation or abandonment of wells shall have a current California C-57 license.

B. All materials of construction shall comply with current DWR bulletins and SCVWD guidelines. Steel and PVC casing shall be Schedule 40 and have flush threads for

connecting pieces together, no plastic solvents are allowed. Wells that are greater than 8 inches in diameter or are greater than 250 feet deep shall have stainless steel screens. All materials in contact with liquid shall be chemically compatible with the liquid.

C. Review lithologic logs in existing geotechnical and/or ground water investigation reports to determine the expected screened interval before the well is drilled. The actual screened intervals for a well shall be determined in the field based on lithologic samples collected when the borehole is drilled.

D. The screen slot size for wells shall be determined following the guidelines of Driscoll, pp 721-722 and TEGD pp 78.

E. The filter pack shall be selected based on wet sieve analysis and shall comply with the guidelines of Driscoll, pp 722 and TEGD pp 83.

F. Annular seal requirements for single and multiple-casing wells shall comply with the requirements of DWR, SCVWD, and TEGD pp 83-86.

G. Wells that have dissimilar metal surfaces in contact shall be protected in a manner that will prevent galvanic corrosion. Stainless steel screens connected to dissimilar metals shall comply with the welding procedures in Appendix 13G of Driscoll and ASTM/AWS E309-16.

H. In selecting the location of all wells, consider access for maintenance vehicles, overhead and underground obstructions that restrict drilling, and wetlands construction restrictions. Also minimize the distance to power and sewer utilities, if possible. Wherever possible, the first 5 feet of the borehole shall be hand augured to prevent rupturing unidentified utilities.

I. Well development shall comply with Section 14 of Water Wells Standards: State of California; Bulletin 74-81. Development of a well is complete when the water developed from the well meets the more stringent of the following requirements:

Minimum of 5 well volumes removed

pH, temperature, electrical conductivity and turbidity stabilize over 3 consecutive readings

All water produced during development of wells and discharged to the sewer, shall comply with Section 13.10, Temporary Sewer Connection Requirement Standards

J. Drill cuttings, drilling mud and development water wastes shall be contained by the drilling contractor in DOT-approved containers. Each container shall be labeled. The label shall provide a description of the contents, name of contractor, contact person for contractor and phone number for contact person. No wastes shall be discharged to soil and surface waters by the drilling contractor.

13.12.4 Monitoring Well Considerations

In addition to the criteria and standards listed or referenced above, design and installation of monitoring wells shall comply with Figures 13.12.1 and 13.12.2 and the minimum criteria described below.

1. All monitoring wells shall be a minimum of 4 inches inside diameter. Select the diameter of the well that will allow a sampling bailer or pump to be placed in the well. Select a size for the diameter of all monitoring wells that will provide for a travel tube inside the casing for lowering water probes into the well if the well contains a dedicated sampling pump.

2. All monitoring wells constructed in paved or graded areas shall have well-head protection that complies with Figure 13.12.3. LMSSC provides locks for all wells.

Coordinate arrangements between LMSSC and drilling contractor so that locks are provided for new wells.

13.12.5 Extraction Well Considerations

In addition to the criteria and standards listed or referenced above, design and installation of extraction wells shall comply with Figures 13.12.1 through 13.12.2 and the minimum criteria described below.

1. All extraction wells shall include a travel tube 3/4 inch in diameter, minimum. The travel tube will allow access for water-level-sounding probes without entangling the probe around the drop pipe for the pump, power cables, or other utilities inside the well.

2. All liquid level pump controls shall be multi-point, single-stranded RF type probes intertwined with a stainless steel cable. The probes shall be intrinsically safe. The elevation of the low-low liquid level alarm shall limit water draw down within the well to the top of the pump housing, if the pump is a submersible type. The elevation of the high water and low water alarms shall be determined by the hydrogeologist after the well is installed and developed.

3. Use a stainless steel submersible well pump for all extraction wells, unless the wells are recovering floating product. A pneumatic type pump shall be used to recover floating product whenever possible to prevent explosions within the well due to combustible vapors in the well. Provide LMSSC with calculations that clearly indicate the method, equations and assumptions used to calculate the horsepower required for each pump at the desired well location and depth. The LMSSC Project Manager may allow submersible pumps for removing floating product if the depth of the floating product is large enough to eliminate the potential for explosion.

4. All extraction wells constructed in paved or graded areas shall have well head protection that complies with Figure 13.12.3.

13.12.6 Drilling Methods

All monitoring or extraction wells installed shall employ one of the following drilling methods:

1. Hollow stem auger for wells installed at Plants 1, 2, and 5
2. Direct mud rotary for wells installed at Plants 1, 2, and 5
3. Air rotary for wells installed at Plant 2, except where free product is present

13.12.7 Site Safety

All installation, sampling, redeveloping and abandoning of wells shall comply with the health and safety requirements of 29 CFR Parts 1910.120,1926.20 - 1926.21 and 26 CCR Division 4.

13.12.8 Sampling Protocol

All samples collected from monitoring wells shall comply with the guidelines of EPA SW 846, EPA-OSWER 9950.01 RCRA Ground Water Monitoring Technical Guidance Document and SCVWD Ground Water Monitoring Guidelines, March 1989. Sampling protocol shall also comply with site-specific sampling requirements established by DHS or RWQCB. Wherever possible, require the use of brass inserts in split spoon soil samplers for collecting soil samples for regulatory compliance. All ground water and lithologic identification samples collected for regulatory compliance shall be collected using stainless steel or Teflon equipment. All ground water sampling shall comply with a LMSSC and/or regulatory approved Sampling and Analysis Plan and Quality Assurance Project Plan. The samples collected shall be analyzed by an LMSSC approved

laboratory. All development water shall be disposed or treated in accordance with Subsection 13.7.3.

13.12.9 Well Redevelopment Protocol

Redevelopment of wells shall comply with the guidance provided in Driscoll, Ground Water and Wells, 2nd Edition; pp 636 - 657. Avoid the use of chlorine or chlorine containing compounds in acid treatment of monitoring or extraction wells. All development water shall comply with Subsection 13.17.3.

13.12.10 Well Abandonment

Well abandonment shall comply with SCVWD Standards for the Construction and Destruction of Wells and other Deep Excavations in Santa Clara County, Well Destruction Standards section. Figure 6 of the SCVWD Standard illustrates the typical sealing features of destroyed wells. Well abandonment of monitoring wells shall also comply with Part III of Bulletin 74-81 Water Well Standards: State of California, September 1988. Complete SCVWD Form FC 198 and submit the form to O/9K2S before abandoning any well. Require the drilling contractor to complete DWR Form 188 and submit the form to O/9K2S immediately after abandonment of the well. All Contractors destroying wells shall have a California C-57 license.

13.12.11 Documentation

A. All wells installed shall have the documentation described below. The documentation shall comply with LMSSC Environmental Protection Programs standards.

B. Drilling Documentation

All monitoring and extraction wells installed shall have a completed SCVWD Well Construction Application Form FC 185 (07-26-89) and DWR Form 188. All abandoned wells shall have a SCVWD Form FC 198 (07-25-89) and DWR Form 188. In addition to the documentation described above, all wells installed shall have a completed driller's log. The driller's log shall contain the minimum information listed below:

1. Name of drilling contractor
2. Well ID number
3. Top of casing elevation
4. Date installed
5. Method of drilling
6. Borehole outer diameter
7. Well casing inside diameter
8. Well casing material
9. Screen material
10. Screen slot size
11. Sand pack grain size
12. Total borehole depth
13. Total well depth
14. Screening interval
15. Lithology of well boring using the Unified Soil Classification System soil descriptions that comply with ASTM D2487-85 and ASTM D2488-84.

C. Development Documentation

All well development events shall have a development log that contains the minimum information listed below:

1. Name of person developing the well
2. Well ID number

3. Date developed
4. Time of day development started and was completed
5. Bottom of casing, measured from top of casing
6. Static water level before development
7. Volume of standing water per foot of casing
8. Number of casings removed
9. Type of development system used
10. All electrical conductivity readings
11. All pH measurements
12. All temperature measurements
13. All turbidity measurements

D. Monitoring Documentation

All monitoring documentation shall comply with Appendix C of the SCVWD Investigation and Remediation at Fuel Leak Sites, Guidance and Report Preparation. All monitoring events shall have a monitoring log for each well sampled that contains the minimum information listed below:

1. Date sample was collected
2. Time of day sample was collected
3. Volume of water purged from the well before sampling
4. Equipment used to collect sample
5. Standing water elevation before and after sampling
6. Temperature of water sampled
7. PH of water sampled
8. Electrical conductivity of water sampled
9. Sample ID's and analysis requested.

E. Laboratory Analysis Reports

All laboratory analysis reports shall provide the minimum information listed below. Each laboratory report shall be signed and dated by the laboratory QA officer.

1. Date sample was collected
2. Date sample was received
3. Date sample was analyzed
4. Analytical method used
5. Dilution factors for each sample
6. Method detection limit for the laboratory based on limits of quantification

F. Chain-of-Custody Forms

All samples shipped to laboratory for analysis shall have a chain-of-custody form signed by the sender(s), shipper(s), and laboratory. The chain-of-custody form shall include the minimum information listed below:

1. Identification number of well sampled
2. Date sample was collected
3. Time sample was collected
4. Type of sample (grab or composite)
5. Analysis requested for each sample
6. Sample ID number
7. Name of sampler
8. Total number of samples in the shipping container.

13.14 WETLAND PROTECTION CONSTRUCTION LIMITATIONS

13.14.1 Scope

A. This section will provide a generalized overview of the permitting process and the development of construction limitations for future LMSSC construction projects which may involve wetlands. The U.S. Army Corps of Engineers (Corps) defines wetlands as "those areas that are inundated or saturated by surface or ground water at a frequency and duration sufficient to support, and that under normal circumstances do support a prevalence of vegetation typically adapted for life in saturated soil conditions. Wetlands generally include swamps, marshes, bogs, and similar areas." (33 CFR 328.3(b)) Wetlands represent a significant natural resource, since they serve important ecological functions.

B. The mission of regulatory agencies which grant permits and comment as part of the public review is to prevent the disturbance or destruction of wetlands. The EPA issued guidelines which prohibit the Corps from granting a permit unless the project is water-dependent or unless the applicant demonstrates that there is no practical alternative to the project. After satisfying EPA guidelines, the applicant must show that the project is in the public interest. This typically translates into mitigation of any wetland losses from the project. Usually new wetlands must be created that are at least equal, in size and in quality, to the wetland losses resulting from the project. Clearly, consultation with public agencies at an early stage during the design of a project can minimize the impact on wetlands, and costly mitigation measures could be avoided.

C. Permits for activities within wetlands include special conditions (often in the form of construction limitations) which are very specific to the project, the site, wildlife, habitats, and regulatory agencies involved. For example, very different permit conditions may be required for the same type of project at different locations, one where there is a known population of an endangered species that is likely to be affected by the project, and the other with little wildlife use of the project area.

D. Future LMSSC projects may span a wide range of size and complexity. The potential impacts on wetlands will vary in response to the particular nature of each project and the ecology of the proposed site. Since the relevant details of future LMSSC projects cannot be predicted with much certainty, this section will provide general guidance on the permits typically required for activities within wetlands. The regulatory agencies with jurisdiction over wetlands are listed and their specific concerns are described. Typical permitting process for each agency and the approximate time required to complete the process are outlined. References and resources that provide information on the permitting process are listed. No attempt will be made to provide an all-inclusive list of references and resources.

E. No persons shall contact any regulatory agency concerning wetlands issue without first notifying LMSSC. LMSSC staff includes various in-house technical experts, such as biologists and legal counsel, available for comment on potential projects. Clearly, review of recent contact with regulatory agencies will ultimately streamline the permitting process by bringing LMSSC personnel up-to-date on the status of negotiations.

13.14.2 Regulatory Agencies

Federal, state, and local regulatory agencies with potential wetland permitting authority over LMSSC Plants 1, 2, and 5 will be described. An explanation of their relevant jurisdiction or mission will be included, and their enabling legislation will be cited, where appropriate.

A. Corps Title of Permit or Approval

1. Typical activities requiring a Corps' permit include the following: boat ramps, intake pipes, piers, wharves, pipes, cables, road fills, riprap, dikes, filling, canals, and jetties.

2. A permit may be issued as either an Individual Permit or a Letter of Permission. An Individual Permit entails a case by case evaluation of a proposed activity which

undergoes the typical review procedures described below, including public notice, opportunity for public hearing, and receipt of comments. The permit conditions include any restrictions, mitigation measures, or construction limitations which the Corps deems necessary to protect the wetlands after reviewing the public comments. If the activity is minor or routine with minimum impacts and if objections are unlikely, then the activity may qualify for a Letter of Permission. This can be issued much more quickly than an Individual Permit, since public notice is not required.

Staff gauges, tide gauges, water quality testing and improvement devices, and similar scientific structures
Survey activities including core sampling, seismic exploratory operations, and plugging of seismic shot holes and other exploratory type bore holes
Non-commercial, single boat mooring buoys
Qualifying bank stabilization activities
Discharge of fill or backfill material for qualifying utility lines

B. Corps Relevant Jurisdiction

1. The regulatory authority of the Corps is based primarily on three laws

2. Section 10 of the Rivers and Harbors Act of 1899: A permit is required from the Corps for any structures or work in or affecting navigable waters of the United States.

3. "Navigable waters of the United States" is defined as those waters that are subject to the ebb and flow of the tide shoreward to the mean high water mark and/or are presently used, or have been used in the past or may be susceptible to use to transport interstate or foreign commerce.

4. Section 404 of the Clean Water Act: Section 301 of this Act requires a Corps permit for activities which may result in the discharge of dredged or fill material into waters of the United States.

5. "Waters of the United States" is a broader term than navigable waters defined previously. This term includes adjacent wetlands and tributaries to navigable waters of the United States and other waters where the degradation or destruction of which could affect interstate or foreign commerce.

6. Section 103 of the Marine Protection, Research, and Sanctuaries Act of 1972, as amended: A Corps permit is required for the transportation of dredged material for the purpose of dumping it into ocean waters. The following laws may also have an impact of applications for Corps permits:

National Environmental Policy Act
Coastal Zone Management Act
Fish and Wildlife Coordination Act
Endangered Species Act
National Historic Preservation Act
Deep Water Port Act
Federal Power Act
Marine Mammal Protection Act
Wild and Scenic Rivers Act
National Fishing Enhancement Act of 1984

C. Corps Permitting Process

1. A preapplication consultation consists of one or more meetings between an applicant and the Corps' staff, prior to the submission of an application. These are typically advantageous for large projects to allow for informal discussion of alternatives, National Environmental Policy Act procedures, and to develop the scope of data

required when an Environmental Impact Statement (EIS) is required. (This step is optional.)

2. Applicant completes permit application (ENG Form 4345) and submits it to the Corps' district regulatory office.

3. Application is received and assigned an identification number. If the project requires approval from the San Francisco BCDC or the Regional Board, the Corps will verify that permit applications have been accepted by these agencies. All permits can be pursued concurrently. However, the applicant must have the final approvals in hand before the Corps will issue a permit.

4. Public notice is issued within 15 days of receiving completed application. A 15 to 30 day comment period ensues, depending on the nature of the activity. The proposal is reviewed by the Corps, federal agencies, state agencies, local agencies, environmental groups, special interest groups, and the general public.

5. The Corps considers all comments and consults with other federal agencies, if appropriate. If a listed species is found on the site, Fish and Wildlife and Fish and Game will review the proposal during a 90 day comment period. These agencies will coordinate and issue a Biological Opinion which will include any special conditions necessary to protect the listed species and critical habitat.

6. The district engineer may ask the applicant to provide more information.

7. A public hearing may be held to give the public the opportunity to present views and opinions. The Corps may participate in joint public hearings with other federal or state agencies. The district engineer may specify in the public notice that a hearing will be held. In addition, a person may request a public hearing in writing during the comment period, giving specific reasons why one should be held. The district engineer may attempt to resolve the issue informally or may set a date for the hearing.

8. The district engineer makes a decision and the permit is issued or denied and the applicant is informed of the reason.

   The time required to complete the Corps permit process varies significantly from project to project. Relatively minor, noncontroversial projects may typically be processed in 3 to 8 months. Sizable or controversial projects require considerably longer time, i.e., 1 to 2 years.

D. Corps Application and Information

To apply for a Corps permit, ENG Form 4345 must be completed and submitted to the district regulatory office. The application requests that the applicant provide the following information:

Detailed description of the proposed activity
The purpose of the project
Names and addresses of adjacent property owners
Location on water body where activity is proposed
Land location of activity
List of all other permits, approvals, certifications, etc,. required for the project

1. In addition, 3 types of drawings are required to accurately depict the proposed activities-vicinity, plan, and elevation. A clear, reproducible, 8.5 x 11 inch drawing should be submitted. (Use the fewest number of sheets necessary to adequately show the proposed activity.)

a. Vicinity Map

The vicinity map should include the following information: location of the project site, latitude, longitude, and river mile, name of the water body and the name of the creek, river, or bay to which the water body is immediately tributary, political boundaries, names and numbers of all roads, north arrow, and scale.

b. Plan View

The plan view should show the following: name of water body and river mile at location of proposed activity, existing shorelines, mean high and mean low water lines and spring high tide line in tidal areas, high and low water lines in non-tidal areas, average water depths, dimensions of the activity and the distance it extends from the high water line into the water, location of any wetlands, distances to Federal projects and navigation channel, if appropriate, dredging quantities and disposal methods, north arrow, and scale.

c. Elevation or Cross Section

The elevation should include the following: water depths, dredging grades, dimensions from mean high water line or mean high tide line, cross section of excavation or fill, including approximate side slopes, and scale.

A. Fish and Wildlife Title of Permit or Approval

Fish and Wildlife does not have permitting authority. Rather, Fish and Wildlife reviews permit applications to the Corps and BCDC and provides comments and recommendations on whether those permits should be granted. If there is a federally-listed species found on the site that may be affected by the project, the Endangered Species Act prohibits any actions that may jeopardize the continued existence of the listed species or modify their critical habitat. Fish and Wildlife coordinate with Fish and Game to issue a Biological Opinion with no duplication of effort.

B. Fish and Wildlife Relevant Jurisdiction

The responsibilities of the Fish and Wildlife Service are described in the two following laws:

1. Endangered Species Act of 1973: (P.L. 93-205, as amended by P.L. 95-632) declares a policy to protect endangered and threatened species. It provides for the protection of habitat upon which these species depend. State-listed species are also addressed in the federal review process.

2. Fish and Wildlife Coordination Act: (16 U.S.C. Section 661-667e) Fish and Wildlife must consult with state and federal wildlife agencies for the purpose of mitigating and compensating for losses to wildlife resources as a result of federal projects.

C. Fish and Wildlife Review Process

1. As part of the Corps' and BCDC permitting process, Fish and Wildlife are consulted on the disposition of listed species within a project area. If no such species are present, the requirements of the Endangered Species Act have been met. If advised that a listed species may be present, the applicant must undertake a Biological Assessment, which includes the following:

An on-site inspection of the project area
Interviews with recognized experts on the particular species under review

A literature review to determine the species distribution, habitat needs and other biological requirements
A description of each species' life history requirements that are met in the project area
Identification of possible impacts to the species
An analysis of mitigation measures to minimize impacts

2. Fish and Wildlife review this assessment and within 30 days they must state whether they concur with the findings. If they determine that the project may have a negative impact on the critical habitat of a listed species, the applicant must request a formal Section 7 consultation with the Endangered Species office. The formal consultation must conclude within 90 days of the request.

3. Formal consultations are negotiations to review the findings in the Biological Assessment and to modify the project to protect the listed species while satisfying project objectives, to the maximum extent possible. If Fish and Wildlife is not satisfied that the mitigation measures are sufficient to protect a species, they may issue a "jeopardy opinion." This concludes that the project will jeopardize the continued existence of a protected species, thus violating the Endangered Species Act. Fish and Wildlife must issue their biological opinion within 45 days of concluding formal consultation.

A. BCDC (San Francisco Bay Conservation and Development Commission) Title of Permit or Approval

1. There are 3 types of BCDC permits: administrative approval for small projects that do not have significant impacts on San Francisco Bay, major permits for large projects, and region-wide permits for several specific routine maintenance activities.

2. Generally, the following types of activities qualify for administrative approval:

Routine maintenance dredging and new dredging of less than 100,000 cubic yards
Placing outfall pipes or other utility cables approved by the RWQCCB on or under the bottom of the Bay
Routine repairs, replacement, reconstruction, and maintenance of pilings, boat docks, and boat slips that do not involve a substantial change in use
Constructing new, single and multiple boat docks (with size restrictions)
Placing a temporary installation that will be in place less than 180 days
Making improvements on dry land in such a way as to have no adverse effect upon public access to the Bay or to obstruct water-related use of a designated area
Constructing of 1 and 2 family residences and ancillary structures

3. If the activity is more extensive than described above, the applicant must obtain a major permit. It is often possible to minimize significant impacts during the planning phase of a project. Coordination with BCDC and the Corps throughout the preliminary stages could result in design changes to reduce costly construction limitations and mitigation measures which would otherwise be included in the permit conditions.

4. If the Executive Director determines that the work qualifies for a Region-wide Permit, Commission authorization can be obtained by filing a "Notice of Intent to Proceed" form. Under most circumstance, the following types of activities are generally authorized under a region-wide permit:

Routine repair and maintenance of shoreline protective works that do no involve any substantial enlargement or extension into the Bay
Routine repair and maintenance of existing outfall pipes, service lines, utility cables, pipelines, ad similar facilities that do not involve substantial enlargement

Routine repair and maintenance of pilings, boat docks on pilings, boat slips, wildlife habitat improvement structures and other waterway devices that do not involve substantial enlargement or change in use
Removal of structures that have deteriorated to the extent that they pose a hazard
Routine maintenance and repair of single and multi-family residences that do not involve an enlargement or substantial change in use.

B. BCDC Relevant Jurisdiction

Filling, dredging, shoreline development, and substantial changes in use are activities that require a BCDC permit. The area extent of BCDC jurisdiction includes:

1. All areas subject to tidal action at the highest tides from the Golden Gate to the area of Chipps Island and Collinsville at the entrance to the Delta.

2. All areas of the Bay which have been diked off as of November 10, 1966 for salt production, duck hunting preserves, game refuges, or agriculture.

3. All shoreline located within 100 feet of the Bay measured from the line of highest tidal action.

McAteer-Petris Act: Government Code Sections 666000 et seq.
San Francisco Bay Plan
California Administrative Code, Title 14, Division 5

C. BCDC Permitting Process

1. Applicant completes permit application and submits it to BCDC.

2. Commission staff summarizes project and distributes summary to the Commission and the public prior to a public hearing. The public hearing cannot be scheduled less than 28 days after an application is filed and is generally held 2 weeks after the application summary is distributed to allow sufficient time for notice to the public.

3. At the hearing, the applicant will describe the proposal and explain why the permit should be granted. The commission will usually vote on the application at the meeting following the public hearing after considering a recommendation prepared by BCDC staff. The applicant has an opportunity to comment on the staff recommendation prior to the Commission vote.

4. The decision on permit application rests solely with the Commission. Thirteen affirmative votes are required to grant a permit.

D. BCDC Application and Information

The following information is required:

Applicants name and address
Project name, description, and dates of activity
Project location-county, city, assessors parcel number
Names, addresses and telephone numbers of adjacent property owners
Estimated quantities of dredging and filling
Description of shoreline band work
State and local approvals
Environmental documentation
Project details and justification
Site plan
Vicinity map

Local report
Legal property interest

California Department of Fish and Game (Fish and Game)

Region 3
P. O. Box 47
Yountville, CA 94599
(707) 944-2011

A. Fish and Game Title of Permit or Approval

1. A Stream Alteration Agreement is required for activities that will be undertaken within the annual high water mark of a body of water containing fish or wildlife resources.

2. The Department bases the evaluation on the anticipated impacts of a proposed project on the fish and wildlife resources. Consequently. the Department writes Stream Alteration Agreements with terms and conditions specifically designed to protect these resources.

B. Fish and Game Relevant Jurisdiction

1. California Fish and Game Code Section 1600 through 1607: Grant the Department the authority to enter into Stream Alteration Agreements.

2. California Endangered Species Act

3. Fish and Wildlife Coordination Act: (16 U.S.C. Section 661-667e)

C. Fish and Game Permitting Process

1. Applicant completes FG 2023 and submits it to the regional Fish and Game office.

2. Within 30 days of receipt of the completed form, the warden must make recommendations on the proposed activity, unless extended by mutual agreement. The warden will determine whether an on-site inspection with district fishery and wildlife biologists is necessary. These specialists will suggest modifications or conditions for the Agreement that will minimize environmental damage and protect biological resources.

3. If the applicant is not present during the inspection, the warden sends suggested modifications to the applicant, together with a description of the fish and wildlife resources affected by the project.

4. The applicant has 14 days to accept or deny these modifications by signing the Agreement (Form FG 1060) and returning it to the warden. After the Agreement has been signed, the applicant may begin the project.

5. The lead time for a Stream Alteration Agreement varies with the complexity of the project. For a simple stream crossing, 2 months is generally sufficient.

D. Fish and Game Application and Information

To obtain a Stream Alteration Agreement, the applicant must complete form FG 2023, which includes the following information:

Name, address and telephone number of the applicant
Proposed dates of activity

Location of project by water body, and political boundaries
Description of the project
Impacts of the activity
Measures taken to protect fish and wildlife resources
Available environmental documentation
Description of proposed construction methods
Map showing areas of operation and public access

California Regional Water Quality Control Board

San Francisco Bay Region
1111 Jackson Street, Room 6010
Oakland, CA 94607
(415) 464-1255

A. RWQCB Title of Permit or Approval

A Section 401 Water Quality Certification or Waiver is required before a Corps permit can be issued.

B. RWQCB Application and Information

There is no standard application form due to the considerable variation in the nature of projects requiring this approval. A general description of the project should be provided, along with a copy of the Corps permit application. The Board may develop a list of questions tailored to the anticipated water quality impacts of the particular project. Usually the environmental documentation has the data and information necessary to review a Section 401 permit.

Santa Clara Valley Water District

Permit Division
5750 Almaden Expressway
San Jose, CA 95115
(408) 265-2600

A. SCVWD Title of Permit or Approval

Encroachment Permit

B. SCVWD Relevant Jurisdiction

Any activities within flood control channels require a permit.

C. SCVWD Permitting Process

1. There is no standard application form. A letter requesting a permit should be sent with a copy of the preliminary project plans.

2. Approximately 3 months lead time is generally adequate to obtain permits for small and mid-sized projects.

13.15 SPILL CONTAINMENT AT LOADING DOCKS

13.15.1 Objectives

This section provides standards for spill containment at loading docks and provides for the expedient removal of rainwater in normal operations.

13.15.2 Codes and Standards

The regulations listed below are currently applicable regulations. Regulations change frequently, therefore verify that no other regulations apply.

LMSSC	Facility Design Standards; General, Section 13.1 and Section 13.13, Material Spill Incident Reporting Requirements
LMSSC	Construction Specifications, Section 11161, Dock Levelers
LEED	Leadership in Energy and Environmental Design, US Green Building Council
8 CCR	Cal-OSHA
29 CFR	
40 CFR	
49 CFR	
UFC	

13.15.3 Physical Dimensions

A. Minimum dock length is 70 feet for double trailers, 60 feet for single trailers, and 45 feet for straight body trucks. Clearance for a length equal to the dock length must be allowed directly in front of the dock entrance to allow turning and maneuvering. The minimum width of the dock and driveways is 12 feet. A minimum turning radius of 50 feet must be allowed for exits and entrances. 10% grade may not be exceeded.

B. The depressed area of the dock must drain to a sump which provides spill containment. This sump shall be covered by a steel grating capable of withstanding the expected loads. The volume of this sump will be governed by the intended service. The combined volume of the depressed dock capable of holding liquid and the sump must equal the volume of the largest single container or tanker to be unloaded. Designers must perform calculations to verify this volume.

13.15.4 Equipment

A. Loading docks must be equipped with load levelers and securing devices according to LMSSC FS&O Construction Specifications, Section 11 13 19.13. The loading area must be surrounded with security fencing.

B. The sump must be equipped with a pump capable of removing rainwater during normal operations. The sump must be manually controlled to prevent the accidental discharge of a spill. The control switch for the pump must be equipped with a lock to prevent unauthorized operation. The sump pump must be resistant to the chemicals to be unloaded, and must be explosion proof if flammables are to be unloaded.

13.15.5 Containment and Monitoring

The concrete shall be constructed with chemical resistant water stops at all joints. The concrete shall be coated with a coating resistant to the chemicals to be unloaded and suitable for the traffic conditions. The coating should be capable of containing the material and protecting the concrete for the time necessary to remove the spilled material. Because loading docks will not be used for unattended storage, the anticipated containment period may be limited to 24 hours. The coating shall be finished with a no-slip surface.

13.15.6 Signs

A. The dock must be equipped with backup warning signs and a load-securing indicator light. Traffic control signs (Stop, Yield, etc.) and speed limit signs must be posted at the entrance and exit to the dock area.

B. A prohibition of unauthorized use of the sump pump must be posted. If the loading dock is associated with a storage or treatment facility, the dock should be provided with the same warning signs applicable to the facility. The Proposition 65 warning must be displayed. Emergency procedures and telephone number for spill response, name and number of the responsible organization, and the location of the nearest phone must be posted.

13.16 GUIDANCE FOR BORINGS/EXCAVATIONS STANDARDS

13.16.1 Objectives

This section provides guidance for environmental requirements related to permits, soil cutting and excavated soil management, and treatment of extracted ground water from the excavation. All borings and excavations shall also comply with OSHA regulations and O/9K2S ESH Heritage Standards, as specified elsewhere.

13.16.2 Codes and Standards

Comply with the current adopted edition of the following codes and standards:

BAAQMD	Regulations 2, 6, 8 and 11
FS&O	Temporary Sewer Connection Requirements Standards, Division 2
FS&O	Ground Water Well Design and Installation Standards, Division 2
LEED	Leadership in Energy and Environmental Design, US Green Building Council
SCVWD	Standards for the Construction and Destruction of Wells and Other Deep Excavations in Santa Clara County, July 1989
O/9K2S	ESH HERITAGE Standards; General Guidelines for Construction Projects that Involve Excavation and/or Drilling
O/9K2S	ESH HERITAGE Standards; Detailed Procedures For Disposal of Construction Related Ground Water

13.16.3 Notification Within LMSSC

Notify O/9K2S at the design stage about all projects that may require excavations, exploratory borings and ground water well installations. O/9K2S will provide special requirements for preventing environmental cross-contamination. Provide O/9K2S with the anticipated number, locations and depths of the borings/excavations and be responsible for notifying O/9K2S about any changes to these plans during the design process.

13.16.4 Borings

A. All exploratory borings shall comply with the section Standards for Exploratory Borings in SCVWD Standards for the Construction and Destruction of Wells and Other Deep Excavations in Santa Clara County. Exploratory borings less than 45 feet do not require

permits, but will require notification to O/9K2S. Exploratory borings may require a conductor casing to mitigate cross-contamination of water-bearing zones.

B. Exploratory borings deeper than 45 feet require permits and inspection by SCVWD. Complete SCVWD Form FC 285 and submit the completed form to O/9K2S. O/9K2S will apply for the Exploratory Boring Construction Permit, and contact the regulatory agency as required.

C. All exploratory borings shall be abandoned within 24 hours following SCVWD standards. Boring abandonment shall comply with SCVWD Standards referenced above. Unless exempted by O/9K2S, all borings shall be infilled with grout.

D. Determine the destination of all excavated soil prior to the start of construction and destinations for clean soil and soil that is deemed hazardous or contaminated above LMSSC background levels.

13.16.5 Excavations

A. Elevator shaft and other deep excavations shall comply with SCVWD Standards for the Construction and Destruction of Wells and Other Deep Excavations in Santa Clara County. All excavations greater than 45 feet require review and permit approval by SCVWD. O/9K2S will contact all regulatory agencies and arrange for all permits and inspections.

B. Determine the destination of all excavated soil prior to the start of construction and destinations for clean soil and soil that is deemed hazardous or contaminated above LMSSC background levels.

13.16.6 Soil Cuttings/Stockpiling Handling

A. Soil removed from borings and excavation shall comply with BAAQMD Regulations 2, 6, 8 and 11 for emissions of dust and hazardous waste air pollutants. Stockpiles shall be protected from wind and rain erosion.

B. If the presence of contaminants is known or suspected based on previous ground water studies or visual and olfactory indications during construction, then the contaminated soil shall be segregated from clean soil during the excavation process. All contaminated soil shall be contained in drums, bins, or stored on plastic and covered. If drums, bins or other containers are used, each container shall be clearly labeled with the information below. All stockpiles must be sampled and analyzed before deciding the disposition of each.

Specific contents (i.e,. fuel contaminated soil)
Name of contractor
Name of person managing the container and its contents
Starting date when container was first used
Phone number of where person managing the container can be reached 24 hours of the day

13.16.7 Water Removed From the Excavation/Boring

Disposal of water removed from excavations shall comply with O/9K2S, ESH HERITAGE Standards; Detailed Procedures for Disposal of Construction Related Ground Water. All water removed from an excavation or boring shall be clarified to remove suspended particles. Water that may contain hazardous constituents (based on previous studies or field observations) shall comply with FS&O Section 13.9 Temporary Sewer Requirements Standards. Notify O/9K2S at least 10 working days in advance before discharging the water. Sludge settled from contaminated water shall be sampled and analyzed for suspected hazardous constituents, if applicable.

END OF SECTION

FIGURE 13.2.1

SCHEMATIC OF VAPOR PHASE GAC

ADSORPTION SYSTEM WITH STEAM REGENERATION

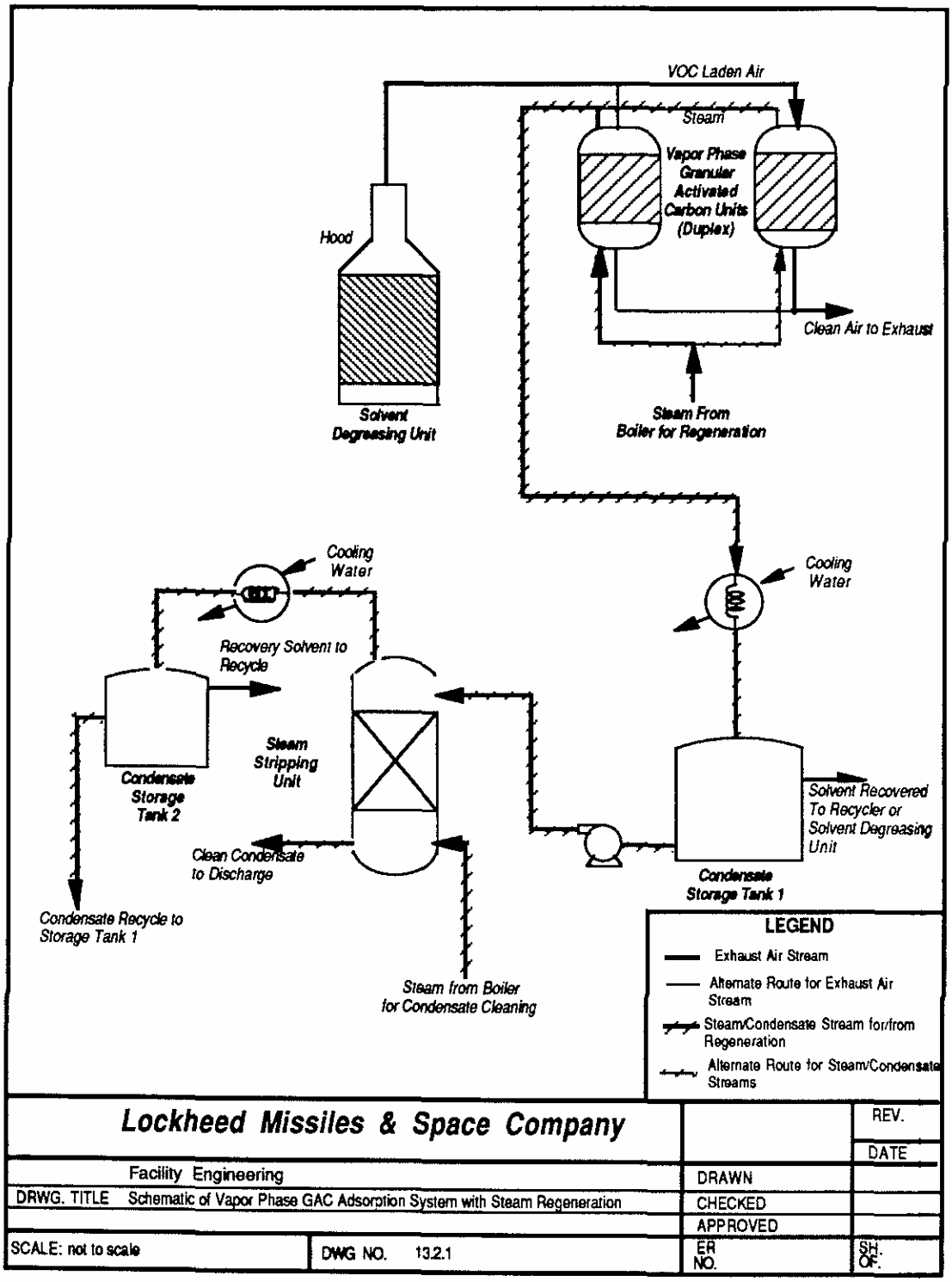

FIGURE 13.5.1

OVERALL TREATMENT SCHEMATIC

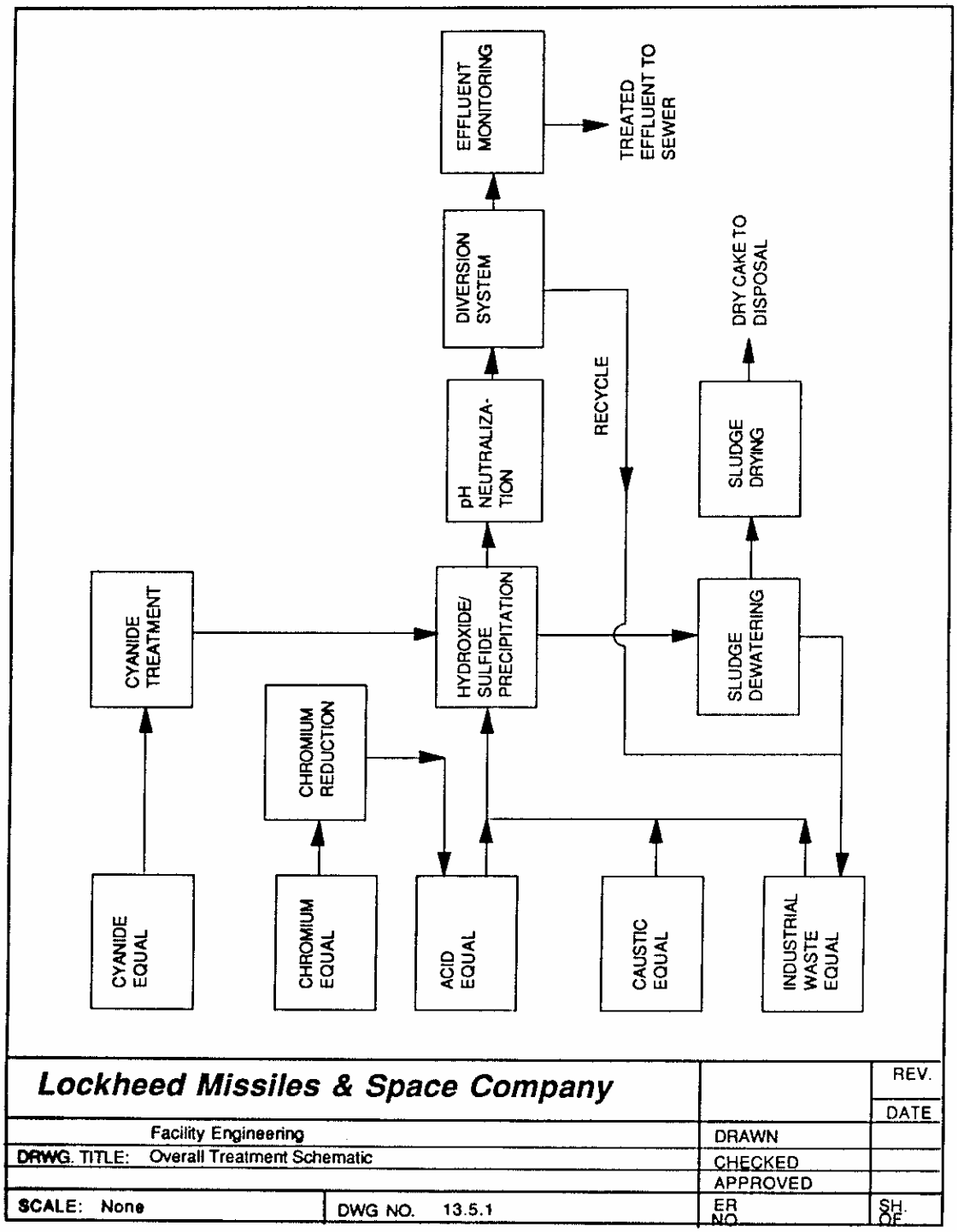

FIGURE 13.5.3

SODIUM METABISULFITE FEED SYSTEM

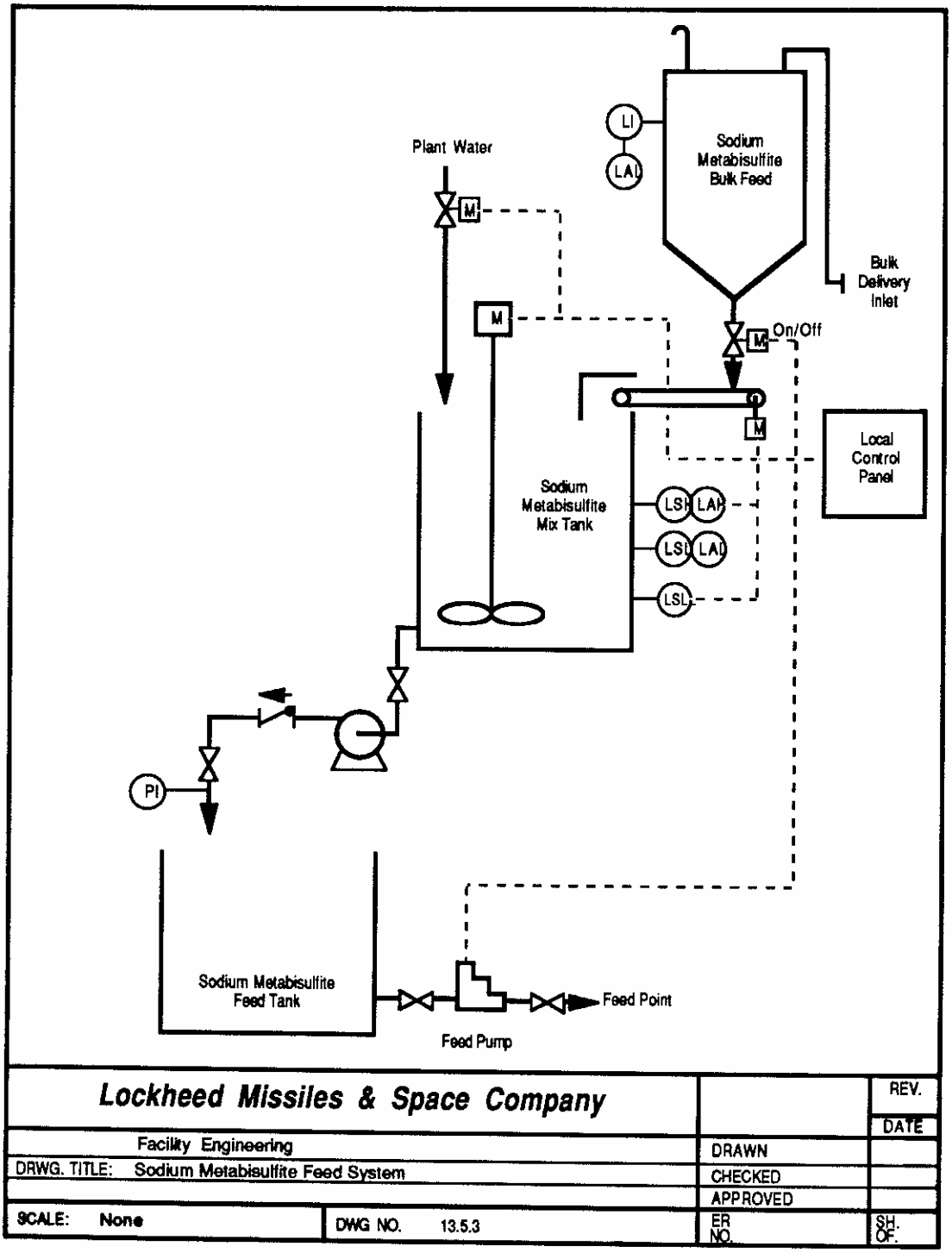

FIGURE 13.5.5

HYDROXIDE/SULFIDE PRECIPITATION PROCESS

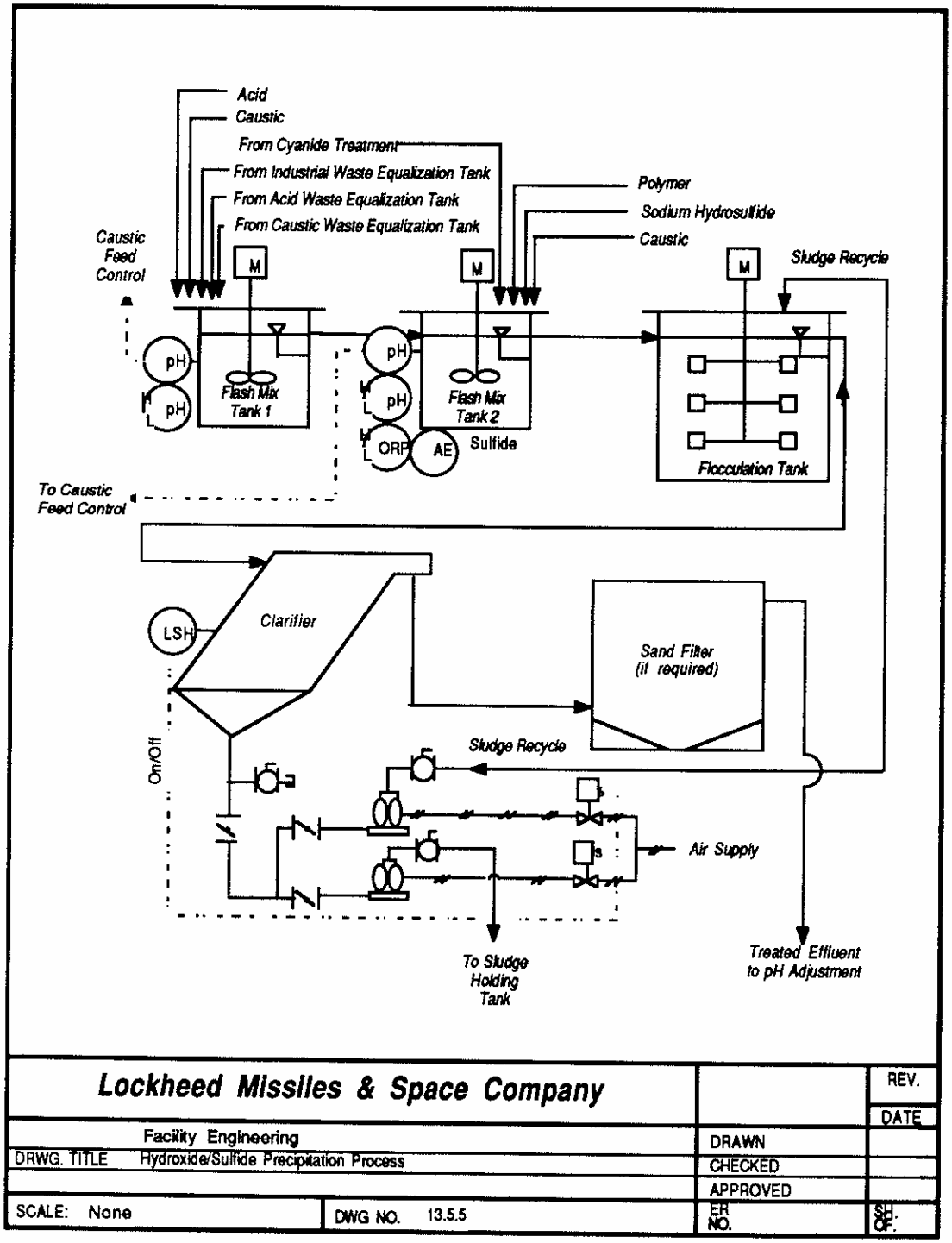

FIGURE 13.5.6

pH ADJUSTMENT

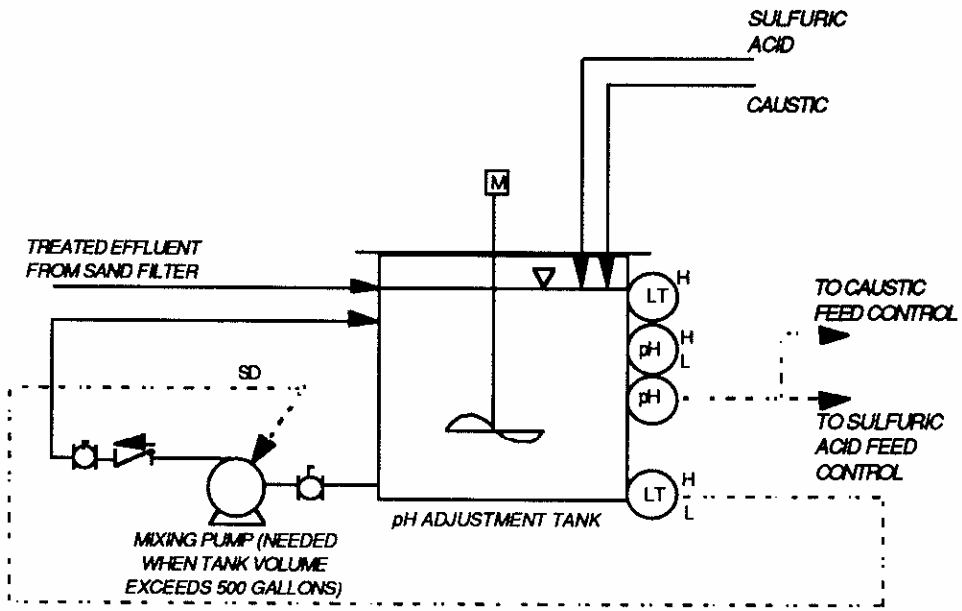

Lockheed Missiles & Space Company			REV.
			DATE
Facility Engineering		DRAWN	
DRWG. TITLE pH Adjustment		CHECKED	
		APPROVED	
SCALE: None	DWG NO. 13.5.6	ER NO.	SH. OF.

FIGURE 13.5.7

FLOW DIVERSION/RECYCLE CONTROL

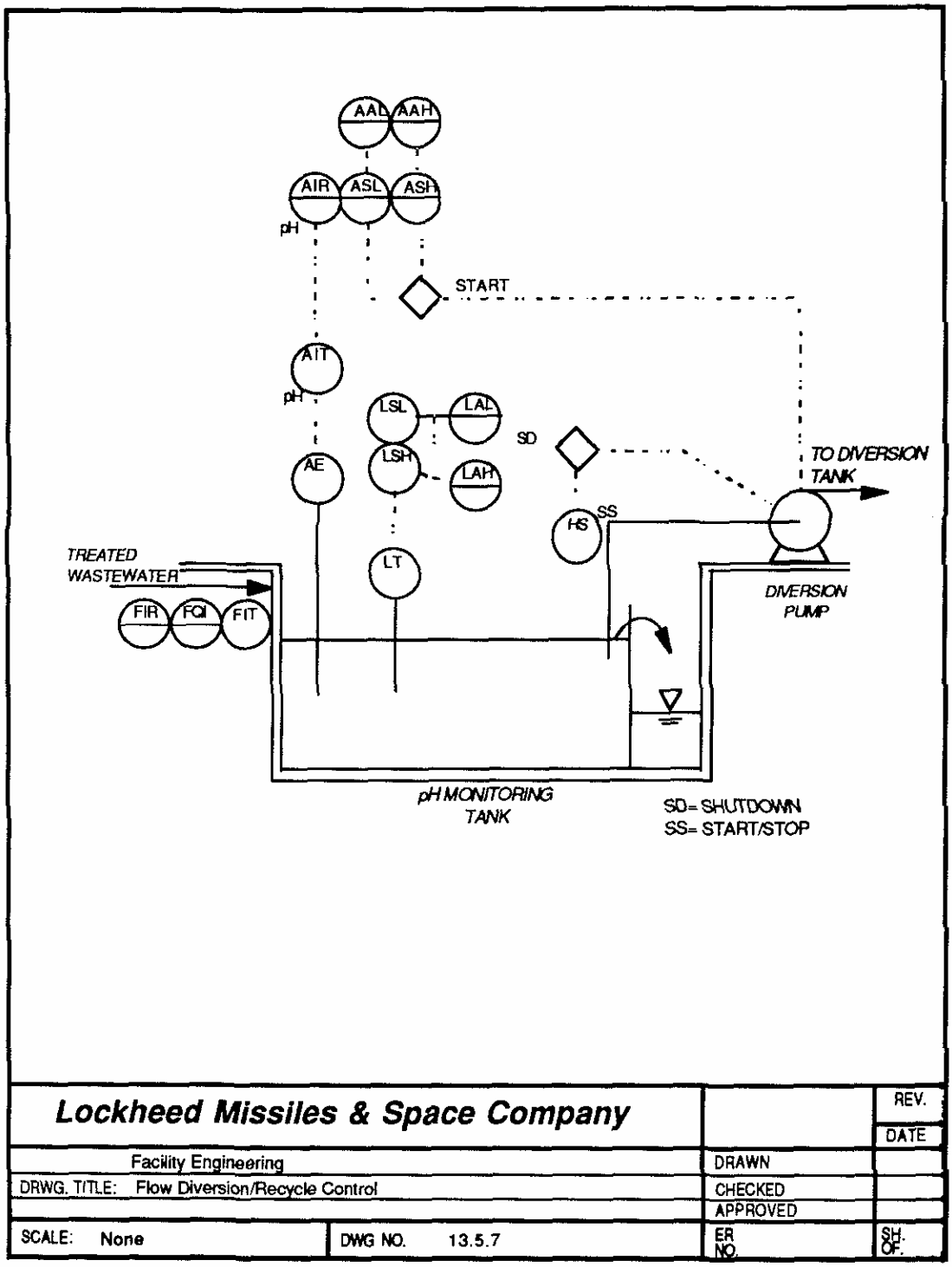

FIGURE 13.5.8

EFFLUENT MONITORING AND SAMPLER LOOP DIAGRAM

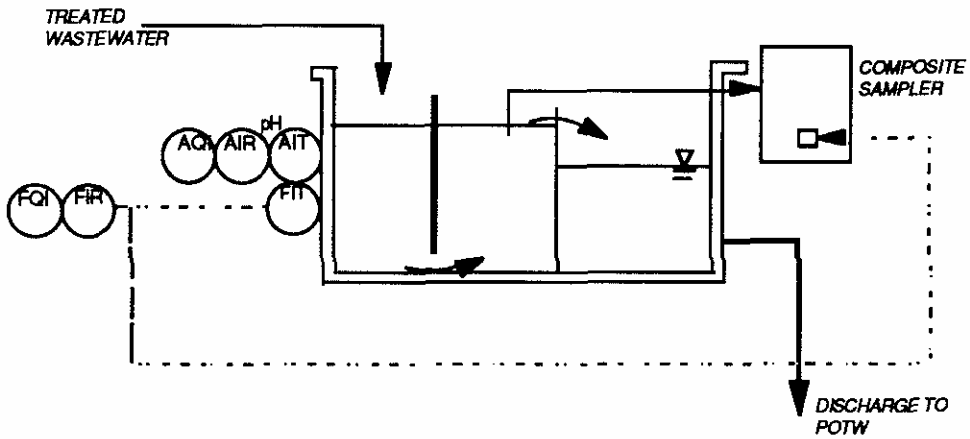

Lockheed Missiles & Space Company			REV.
			DATE
Facility Engineering		DRAWN	
DRWG. TITLE: Effluent Monitoring and Sampler Loop Diagram		CHECKED	
		APPROVED	
SCALE: None	DWG NO. 13.5.8	ER NO.	SH. OF.

FIGURE 13.6.1

pH/ORP MOUNTING FOR OPEN TANK

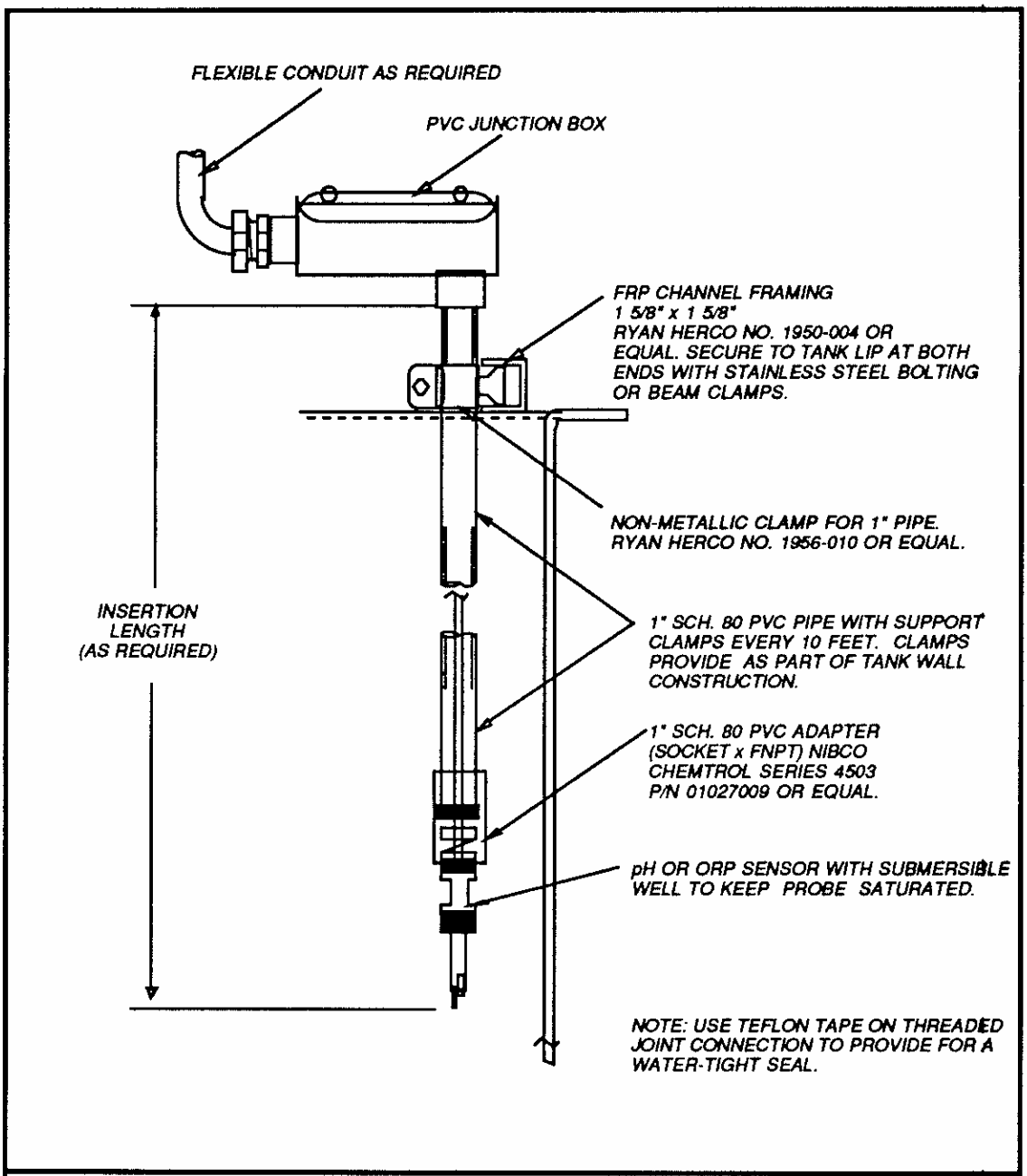

Lockheed Missiles & Space Company			REV.
			DATE
Facility Engineering		DRAWN	
DRWG. TITLE: pH/ORP Mounting For Open Tank		CHECKED	
		APPROVED	
SCALE: None	DWG NO. 13.6.1	ER NO.	SH. OF.

FIGURE 13.6.2

pH/ORP MOUNTING FOR CLOSED TANK

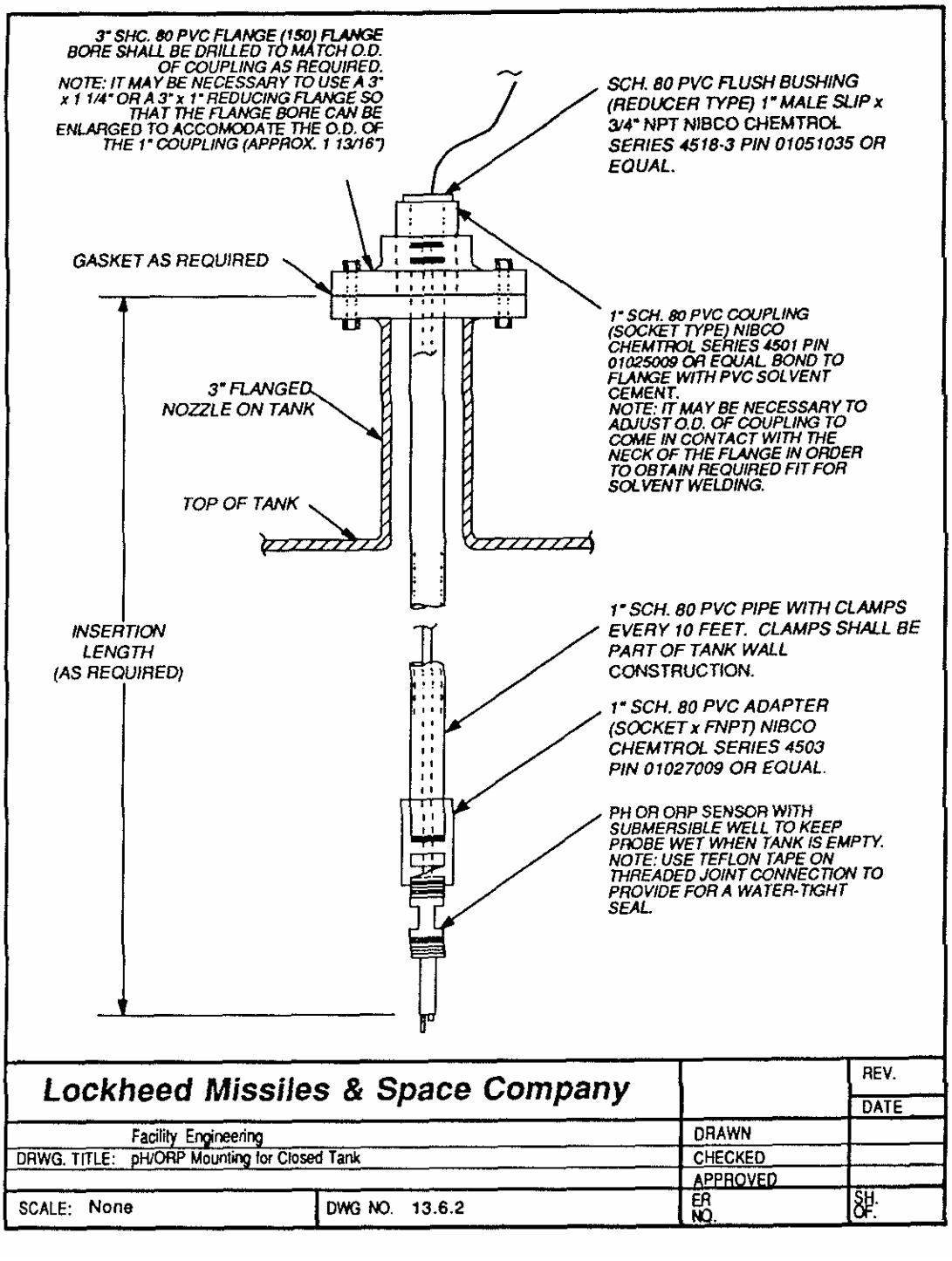

FIGURE 13.6.3

pH/ORP INSERTION MOUNTING

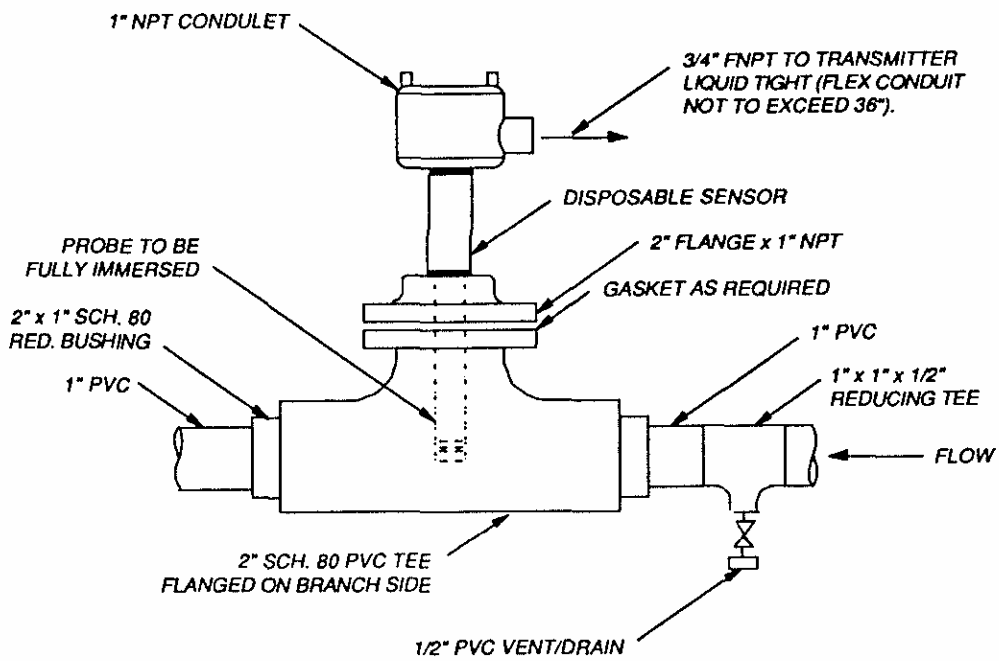

Lockheed Missiles & Space Company			REV. / DATE
Facility Engineering		DRAWN	
DRWG. TITLE: pH/ORP Insertion Mounting		CHECKED	
		APPROVED	
SCALE: None	DWG NO. 13.6.3	ER NO.	SH. OF.

FIGURE 13.6.4

TANK LEVEL PROBE AND TRANSMITTER

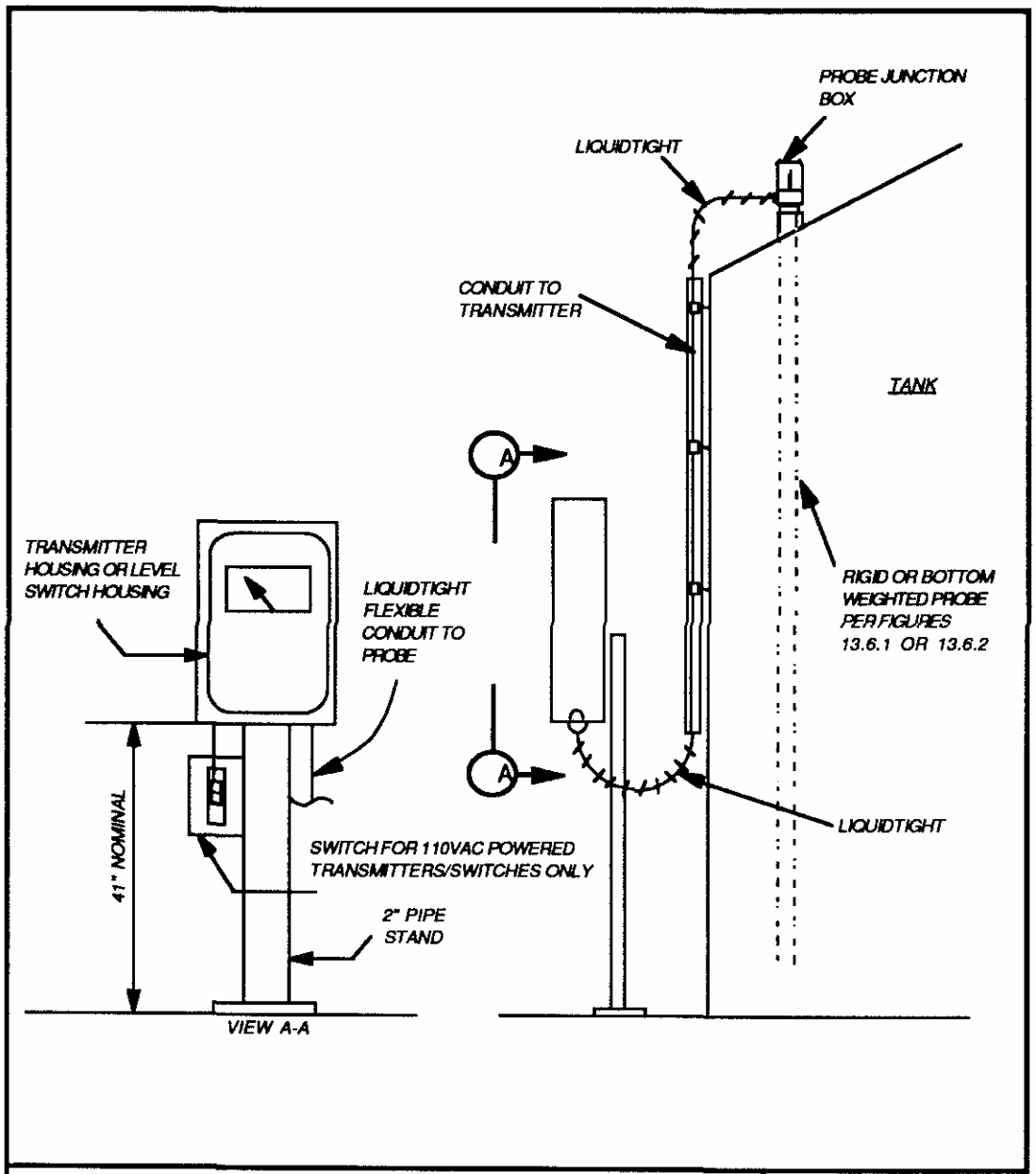

Lockheed Missiles & Space Company			REV.
			DATE
Facility Engineering		DRAWN	
DRWG. TITLE: Tank Level Probe and Transmitter		CHECKED	
		APPROVED	
SCALE: None	DWG NO. 13.6.4	ER NO.	SH. OF.

FIGURE 13.6.5

LEVEL INDICATOR

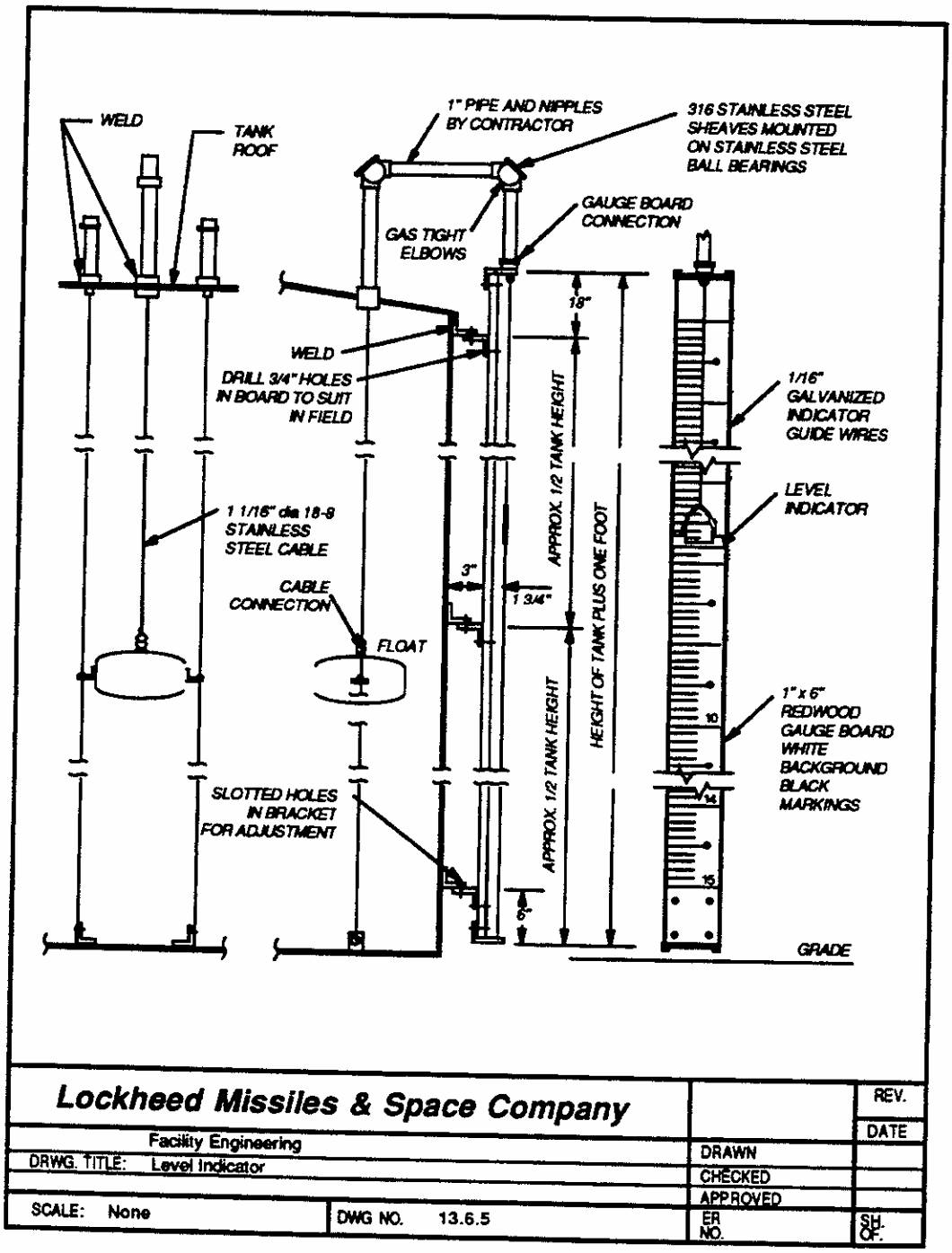

FIGURE 13.6.6

ON-LINE PROPELLER METER

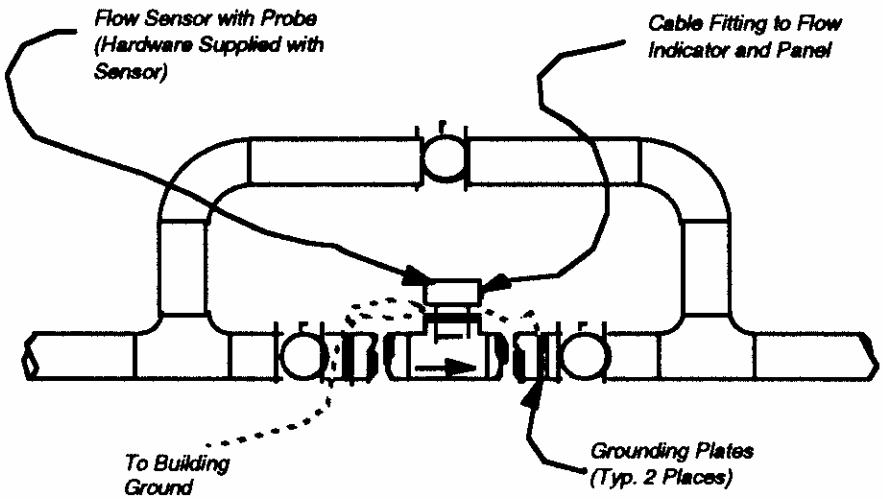

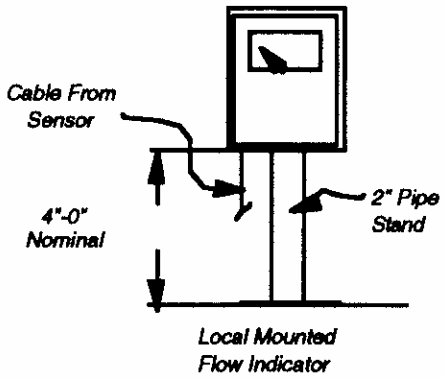

Note:
Flow indicator is not to be mounted in direct sunlight. Orientation to be approved by the Project Engineer

Length of upstream/downstream straight run per manufacturer recommendations

Lockheed Missiles & Space Company		REV. / DATE
Facility Engineering	DRAWN	
DRWG. TITLE: On-Line Propeller Meter	CHECKED	
	APPROVED	
SCALE: None / DWG NO. 13.6.6	ER NO.	SH. OF.

FIGURE 13.6.7

pH/ORP MONITORING SYSTEM LOOP DIAGRAM

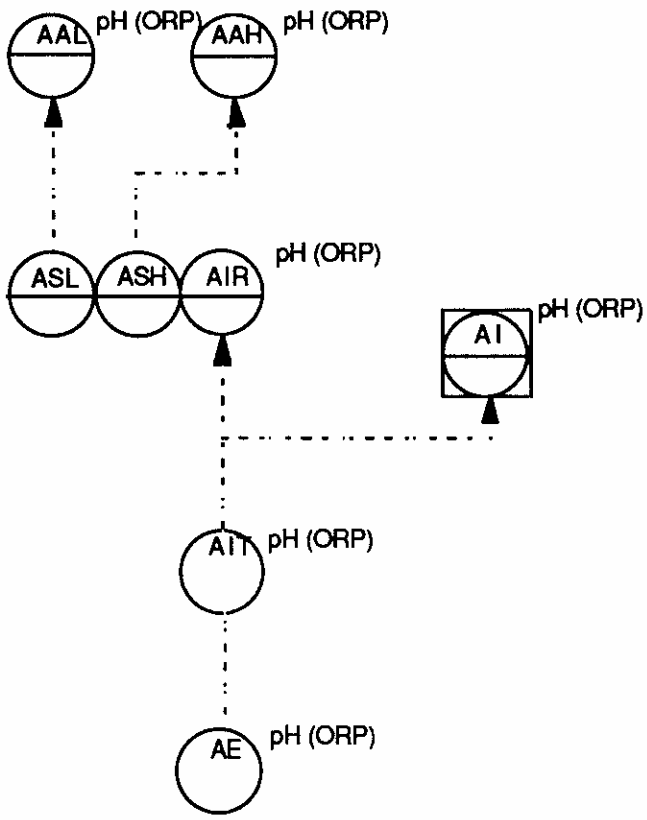

Lockheed Missiles & Space Company			REV. / DATE
Facility Engineering		DRAWN	
DRWG. TITLE: pH/ORP Monitoring System Loop Diagram		CHECKED	
		APPROVED	
SCALE: None	DWG NO. 13.6.7	ER NO.	SH. OF.

FIGURE 13.6.8

pH/ORP CONTROL SYSTEM LOOP DIAGRAM

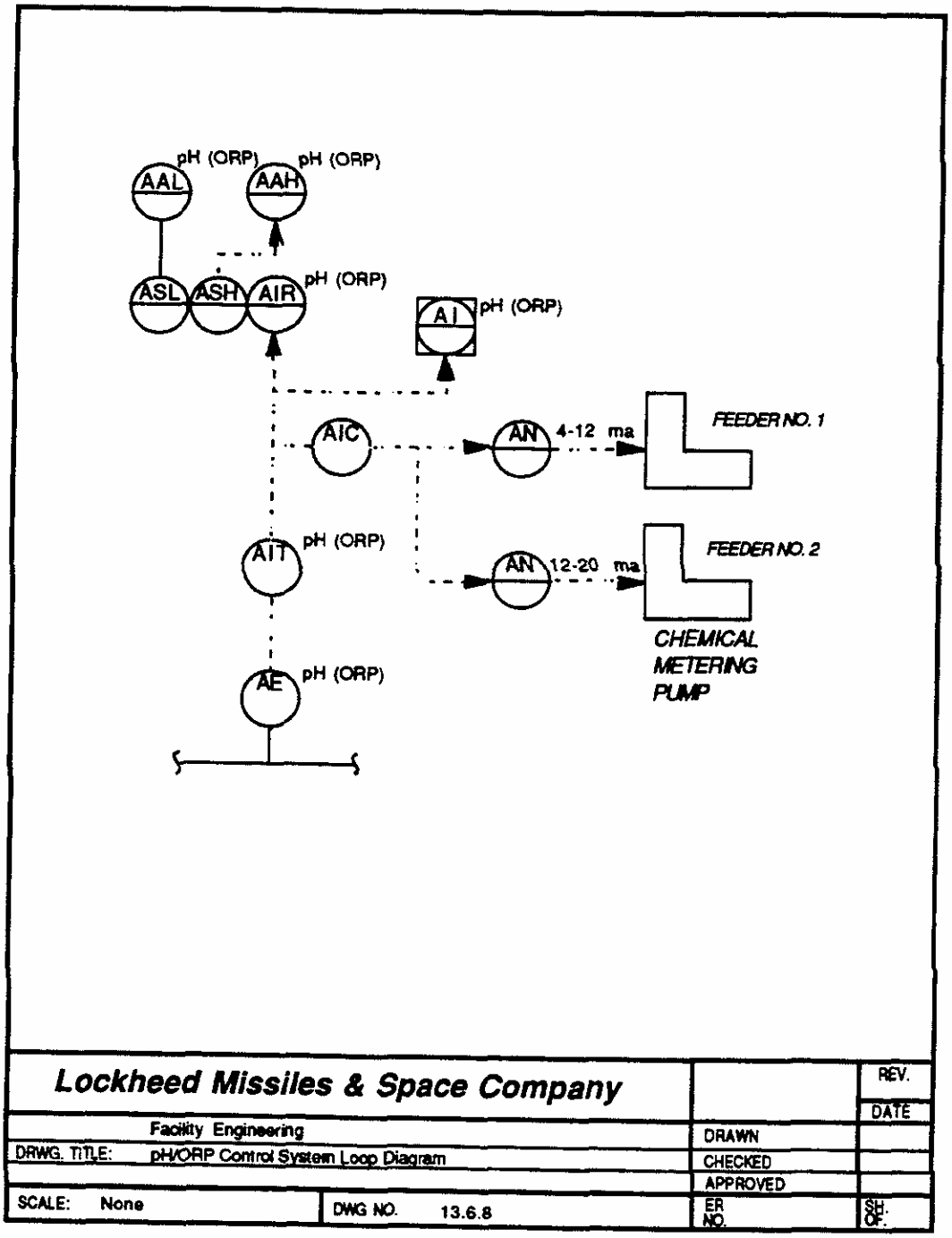

FIGURE 13.6.9

SLUDGE PUMP CONTROL LOOP DIAGRAM

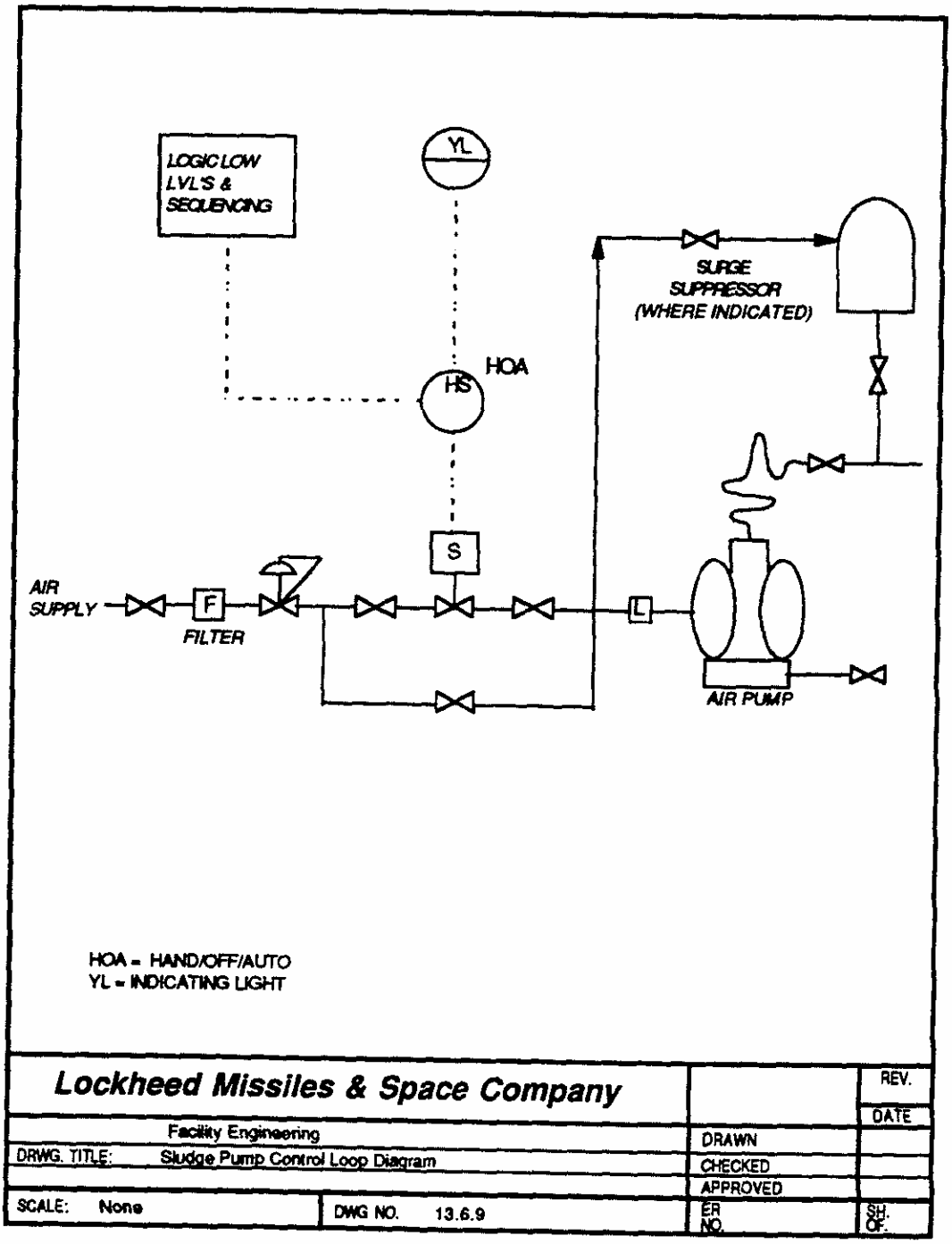

FIGURE 13.6.10

SUMP PUMP CONTROL

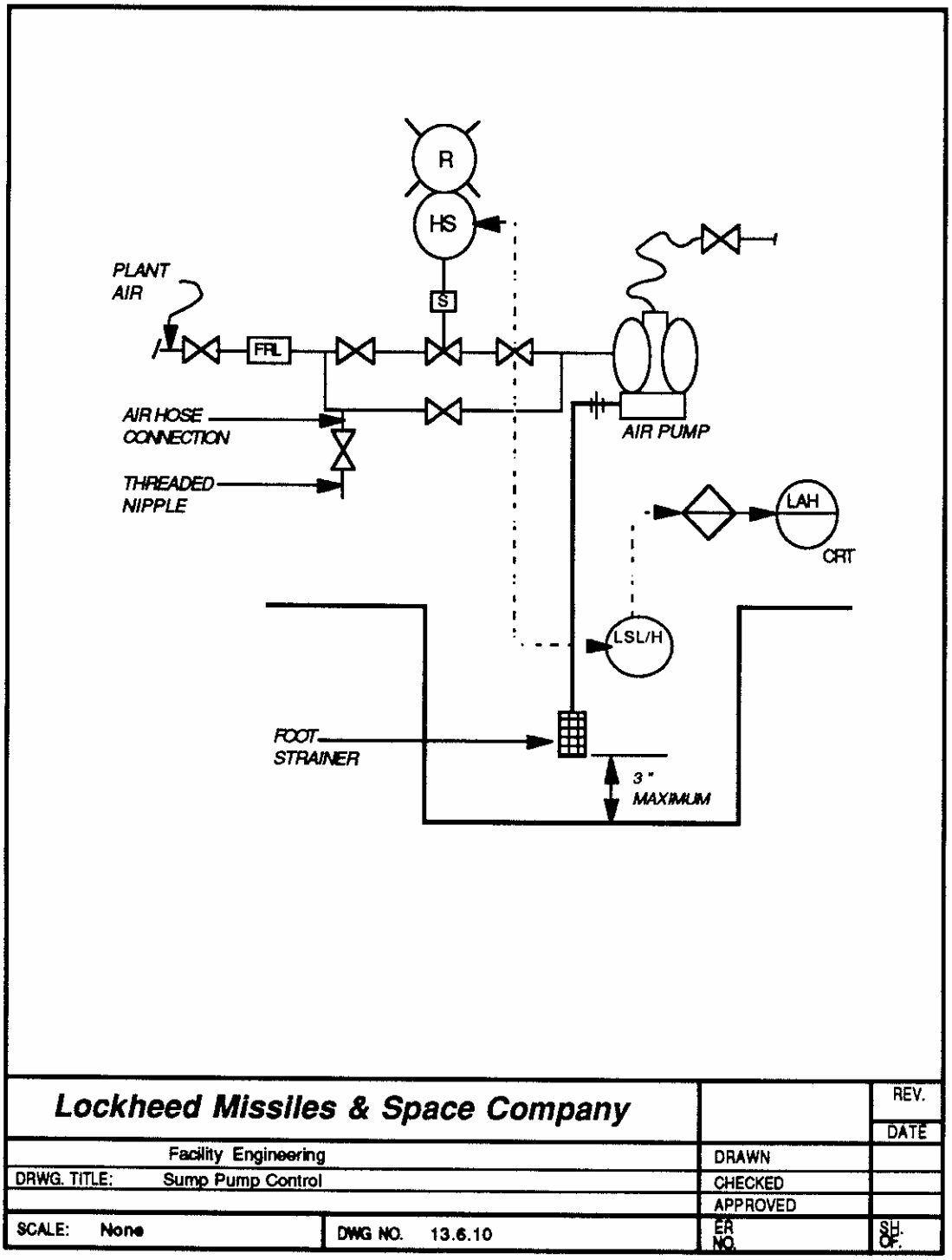

FIGURE 13.6.11

MIXER CONTROL LOOP DIAGRAM

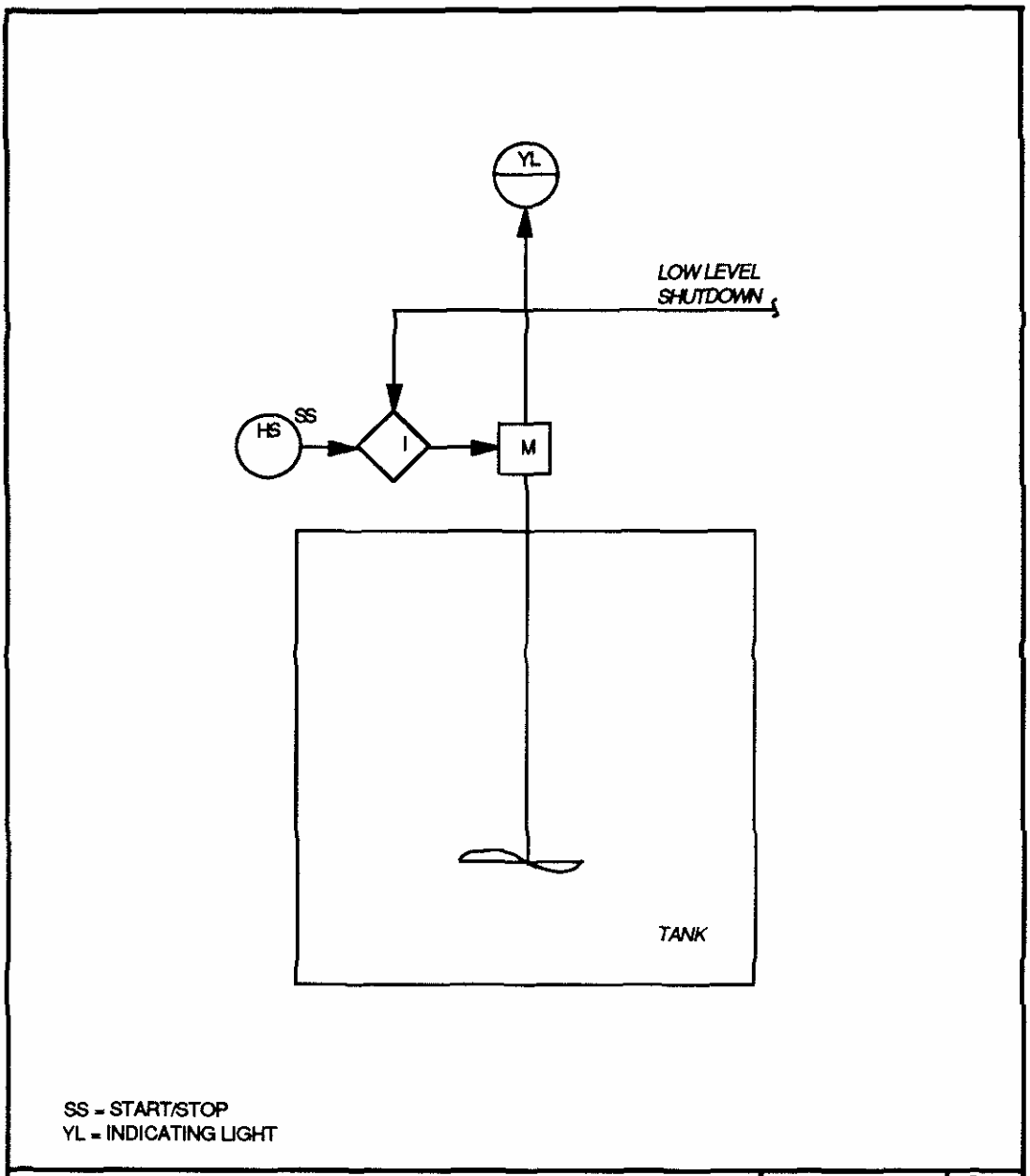

Lockheed Missiles & Space Company		REV. / DATE
Facility Engineering	DRAWN	
DRWG. TITLE: Mixer Control Loop Diagram	CHECKED	
	APPROVED	
SCALE: None / DWG NO. 13.6.11	ER NO.	SH. OF.

FIGURE 13.6.12

FLOW METER DIAGRAM

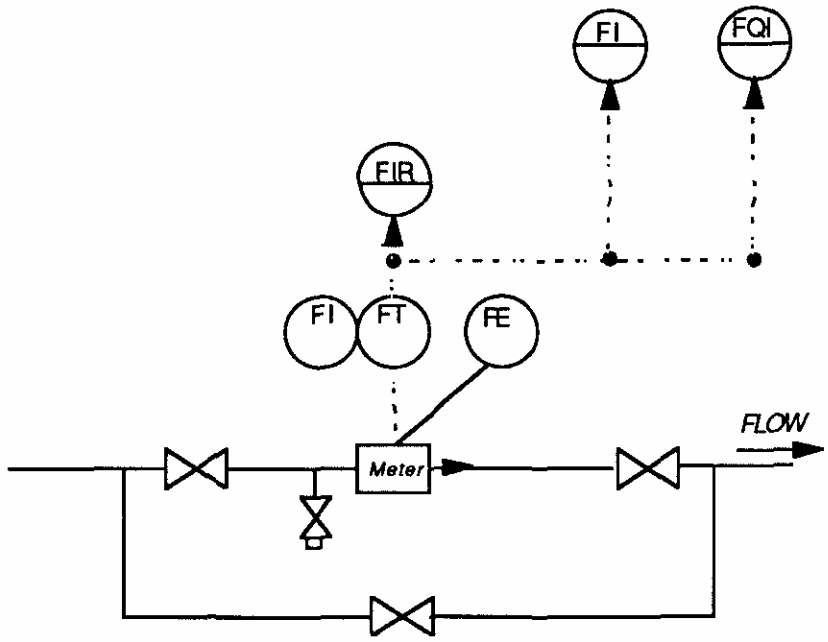

Lockheed Missiles & Space Company		REV. / DATE
Facility Engineering	DRAWN	
DRWG. TITLE: Flow Meter Diagram	CHECKED	
	APPROVED	
SCALE: None / DWG NO. 13.6.12	ER NO.	SH. OF.

FIGURE 13.6.13

CENTRIFUGAL PUMP CONTROL LOOP DIAGRAM

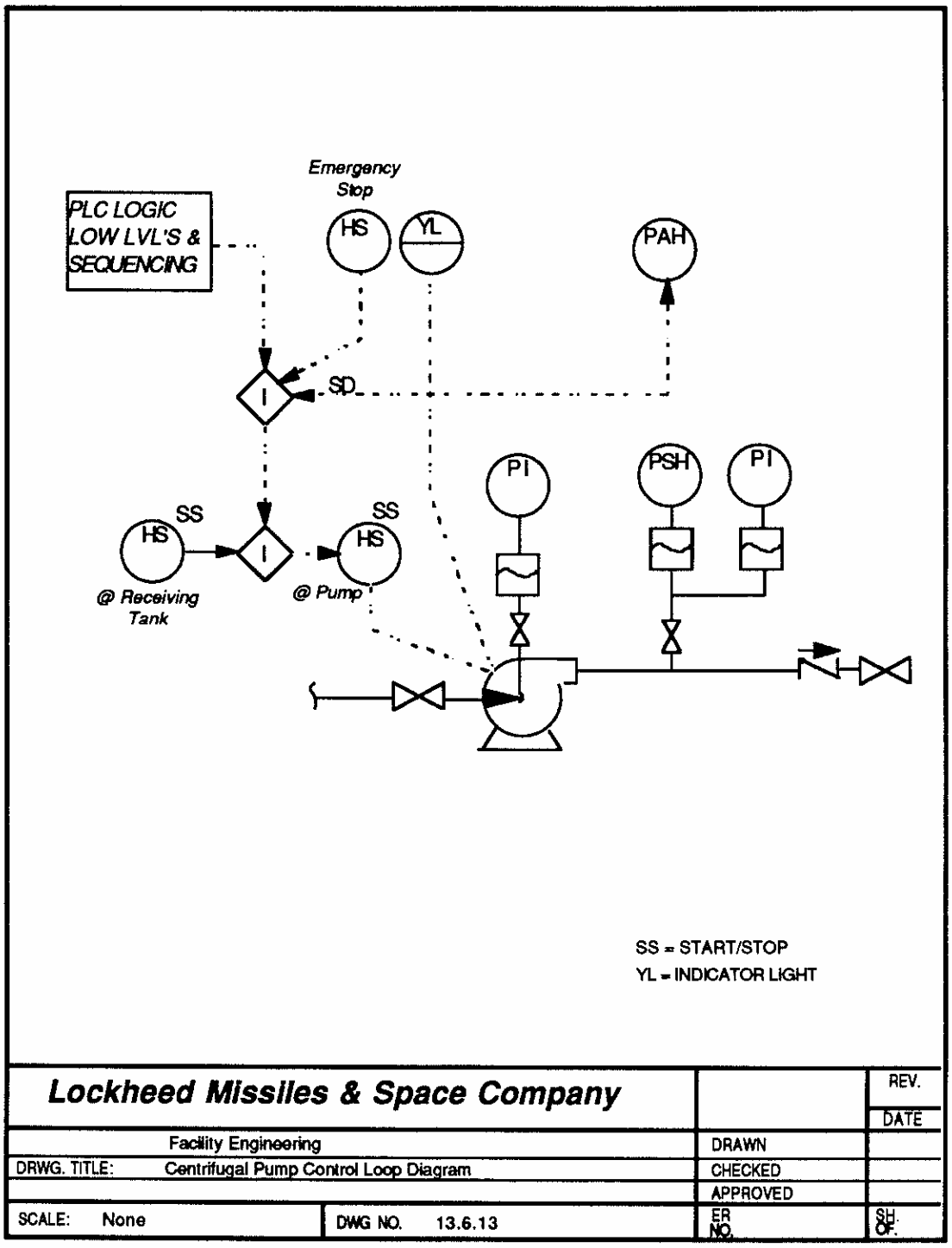

FIGURE 13.6.14

METERING PUMP CONTROL LOOP DIAGRAM

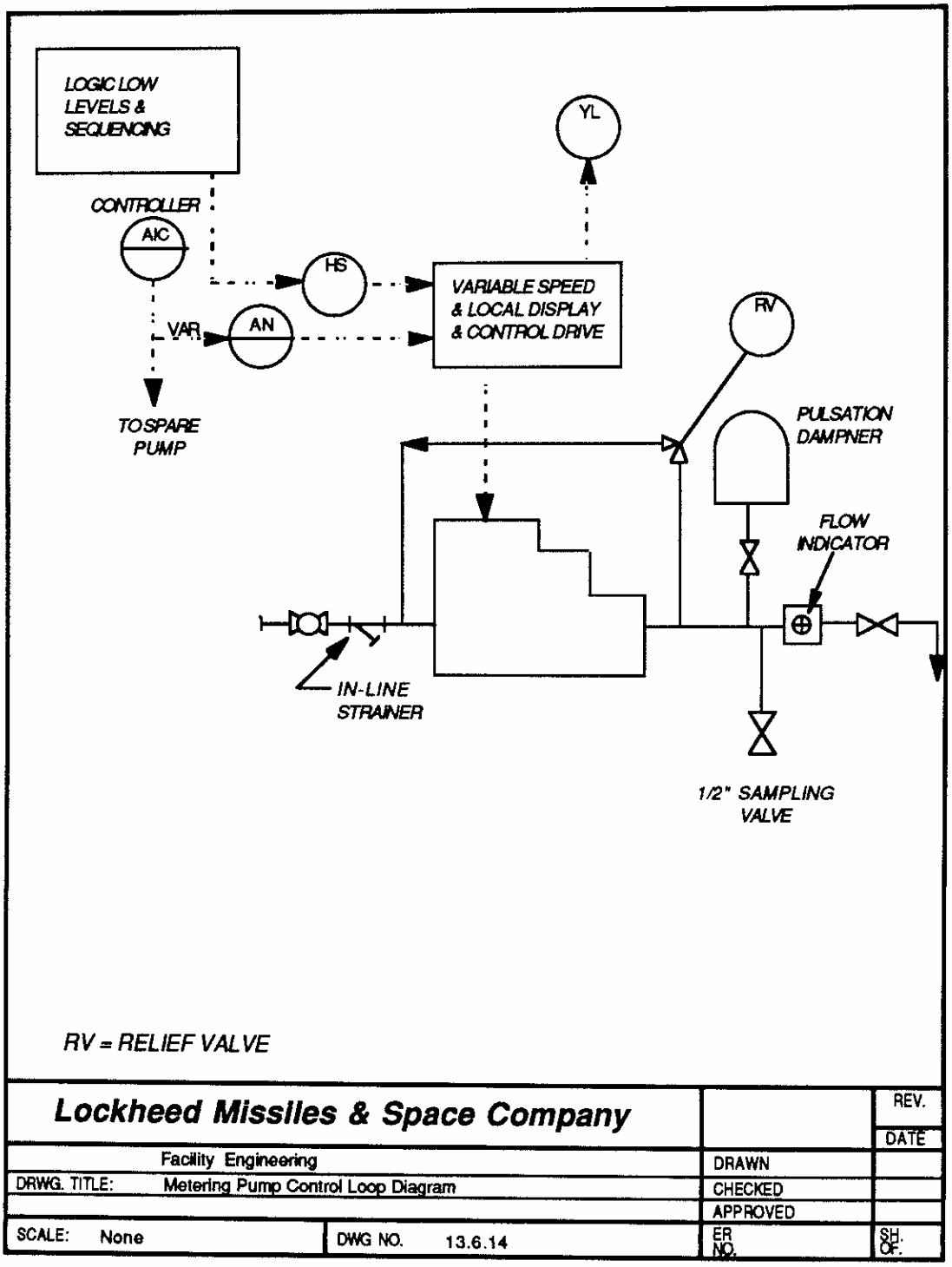

FIGURE 13.7.1

WASTE WATER DIVERSION SYSTEM SCHEMATIC

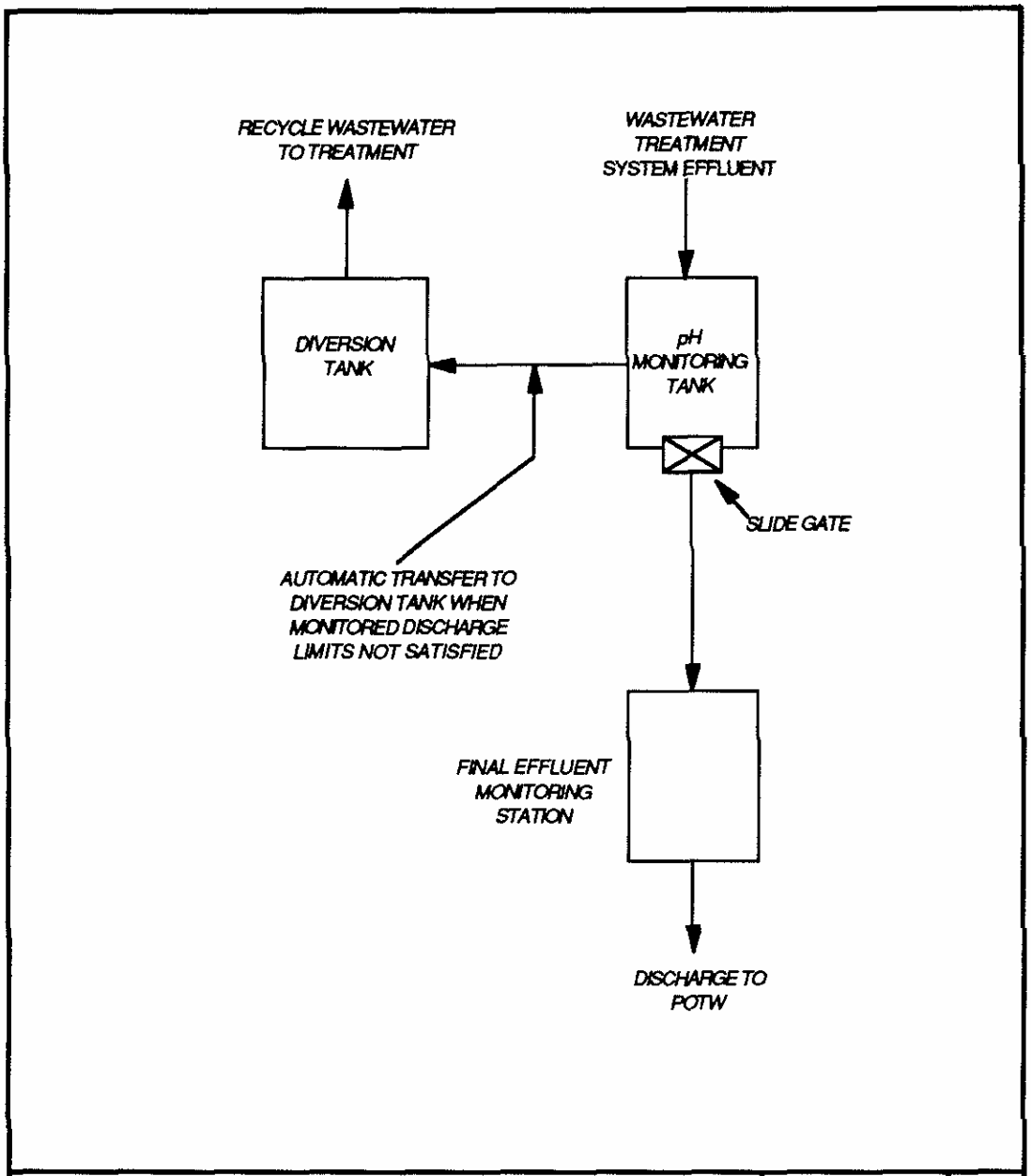

Lockheed Missiles & Space Company		REV.
		DATE
Facility Engineering	DRAWN	
DRWG. TITLE: Wastewater Diversion System Schematic	CHECKED	
	APPROVED	
SCALE: None / DWG NO. 13.7.1	ER NO.	SH. OF.

FIGURE 13.7.2

DIVERSION TANK

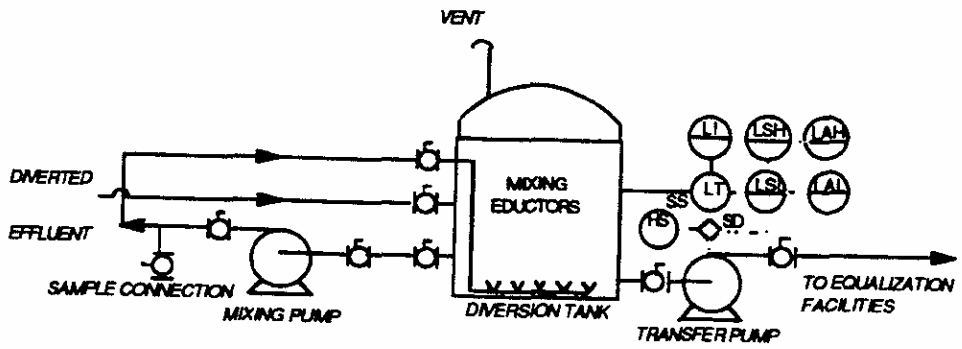

Lockheed Missiles & Space Company		REV.
Facility Engineering		DATE
DRWG. TITLE: Diversion Tank	DRAWN	
	CHECKED	
	APPROVED	
SCALE: None / DWG NO. 13.7.2	ER NO.	SH. OF.

FIGURE 13.12.1

TYPICAL WELL INSTALLATION - SINGLE CASING

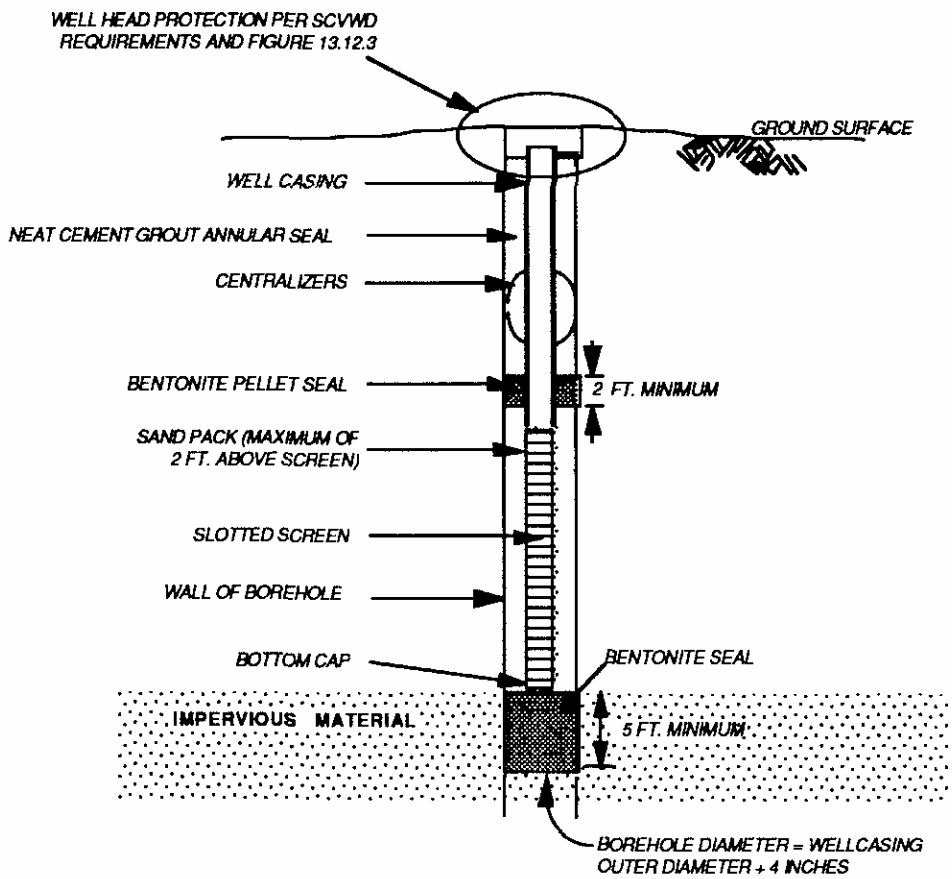

Lockheed Missiles & Space Company			REV.
			DATE
Facility Engineering		DRAWN	
DRWG. TITLE: Typical Well Installation - Single Casing		CHECKED	
		APPROVED	
SCALE: None	DWG NO. 13.12.1	ER NO.	SH. OF.

FIGURE 13.12.2

TYPICAL WELL INSTALLATION - MULTIPLE CASING

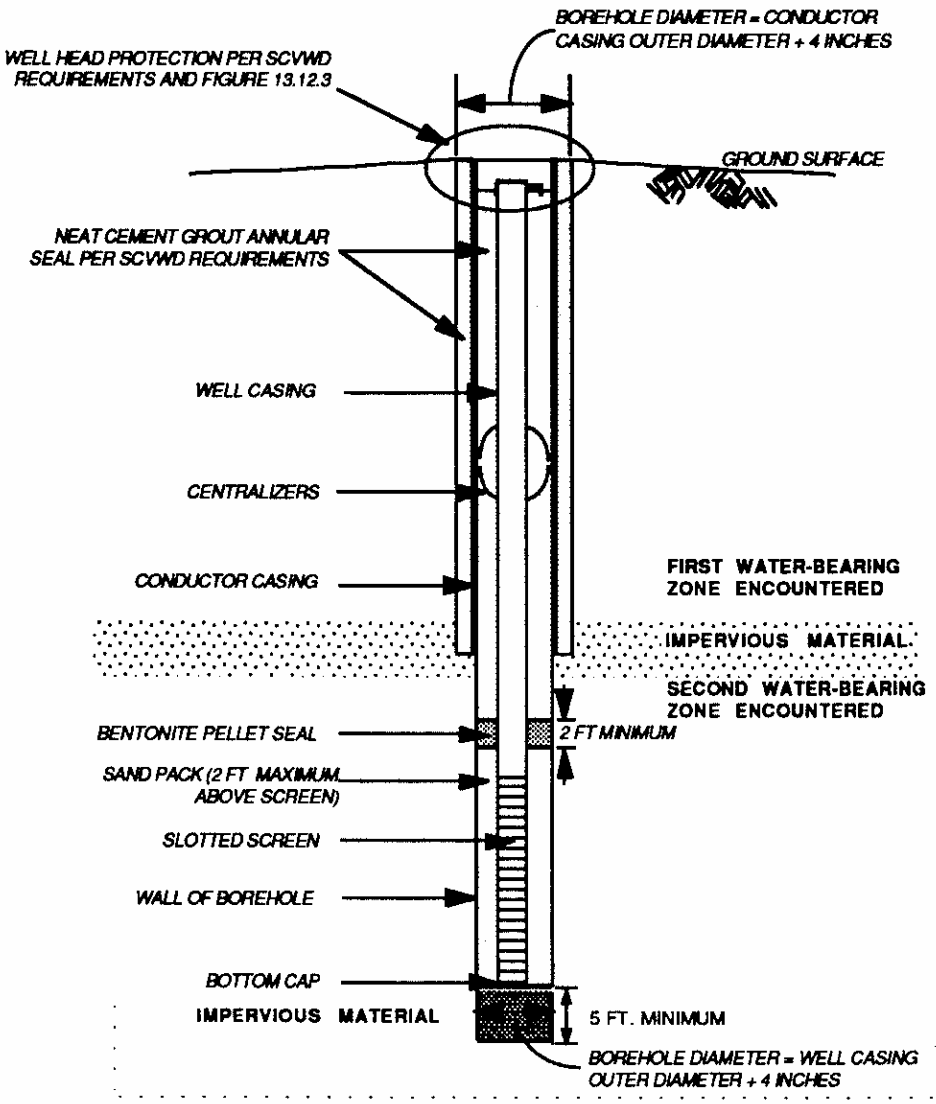

Lockheed Missiles & Space Company			REV. / DATE
Facility Engineering		DRAWN	
DRWG. TITLE: Typical Well Installation - Multiple Casing		CHECKED	
		APPROVED	
SCALE: None	DWG NO. 13.12.2	ER NO.	SH. OF.

FIGURE 13.12.3

WELL-HEAD PROTECTION IN TRAFFIC AREAS

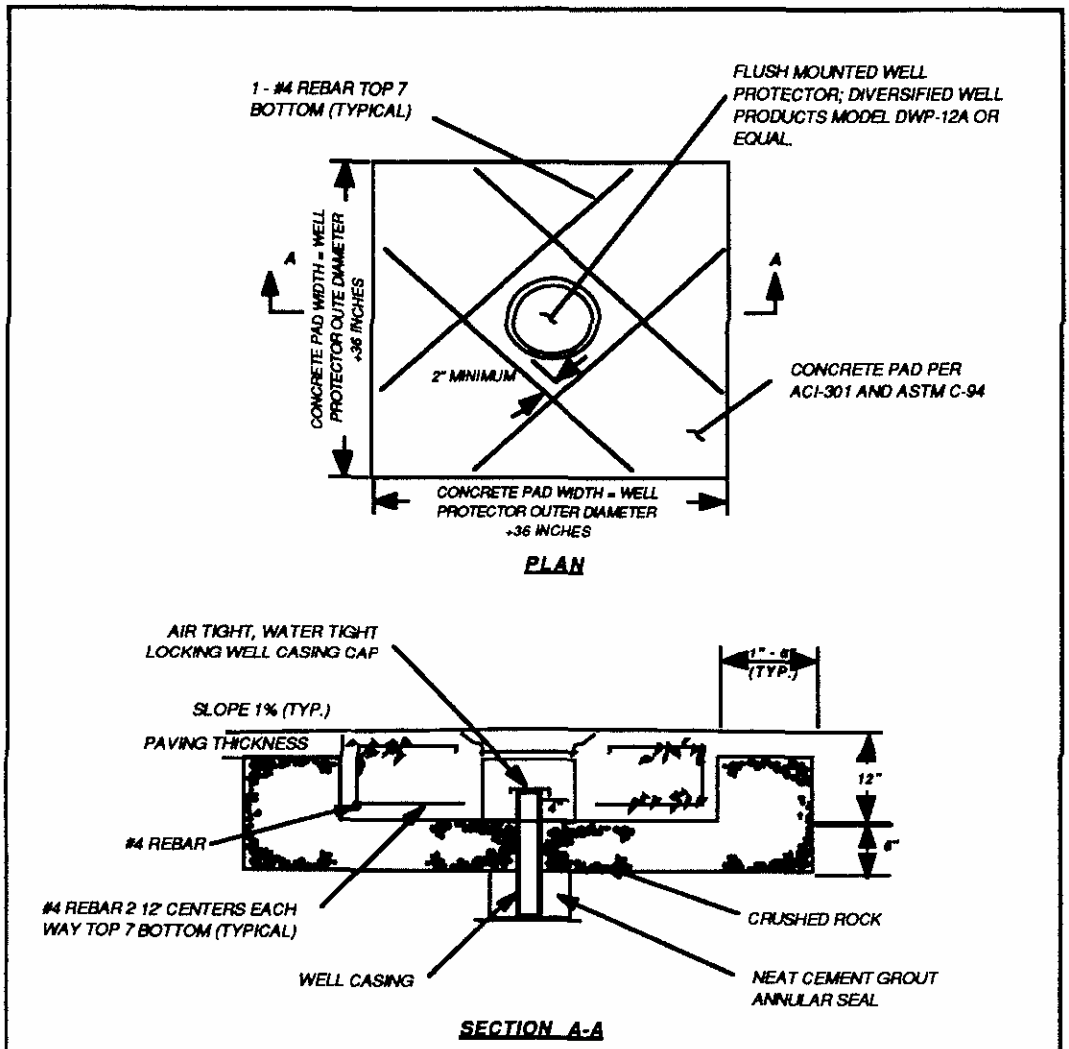

TABLE 13.5.5.1

DESIGN CRITERIA

Description	Units	Value
FLOW EQUALIZATION		
Equalization Tanks		
Minimum Number		5
Retention Time at Design Flow	hours	10
Recirculation Pumps	per tank	2
Equalization Discharge Pumps	per tank	2
HEXAVALENT, CHROMIUM REDUCTION		
Chromium Reduction Tank		
Number		1
Retention Time at Design Flow	minutes	30
Steady State pH		2.5
CYANIDE TREATMENT		
Flash Mix Tank		
Number		1
Retention Time at Design Flow	minutes	10
Steady State pH		8.5
Cyanide Treatment Tank		
Number		1
Retention Time at Design Flow	hours	2
Cyanide Holding Tank		
Number		1
Retention Time at Design Flow	minutes	10
HYDROXIDE/SULFIDE PRECIPITATION		
Flash Mix Tanks		
Number		2
Retention Time at Design Flow	minutes	4
Steady State pH		8.5
Rapid Mechanical Mixing		
Number		1
Retention Time at Design Flow	minutes	20
Steady State pH		8.5
Speed Mixing		
Clarifier		
Number		1
Maximum Surface Loading	gpm/sq. ft.	29
Parrellel Plate		
Sand Filter		
Number		1
Maximum Surface Loading	gpm/sq. ft.	5.0
pH ADJUSTMENT		
ph Adjustment Tank		
Number		1
Retention Time at Design Flow	minutes	15

TABLE 13.5.5.1

DESIGN CRITERIA (continued)

Description	Units	Value
Recycle Tank		
Number		1
Retention Time at Design Flow	hours	18
EFFLUENT MONITORING		
Effluent Monitoring Tank		
Number		1
Retention Time at Design Flow	minutes	10
SLUDE DEWATERING		
Sludge Holding Tank		
Number		1
Retention Time at Design Flow	hours	24
Filter Press - Plate and Frame		
Number		
Cycles Required per Day per Press (Maximum)		2
Cycle Time (Maximum)	hours	4
SLUDGE DRYING		
Sludge Dryer- Steam Fired, Batched Operation		
Influent Cake Moisture Content	percent	60
Product Discharge Moisture Content	percent	25
Operating Time	hour/day	8
ION EXCHANGE		
Parallel Trains		
Number		3
Anion		
Number		3
Throughput at Design Flow	hours	8
Cation		
Number		3
Throughput at Design Flow	hours	8
ACTIVATED CARBON		
Adsorption Vessels		
Number		2
Empty Bed Residence Time	minutes	40
Transfer Vessel		
Number		1
CHEMICAL STORAGE		
Storage Tanks		
Supply at Design Flow	day	20

TABLE 13.5.6.1

FEDERAL PRETREATMENT STANDARDS - NEW SOURCES

Semiconductor (e) Metal Finishing	**40CFR269**		**40CFR433**	
	December 14, 1983		**September 4, 1984**	
Pollutant	**Maximum for Any One Day (mg/l)**	**Monthly Average Shall Not Exceed (mg/l)**	**Maximum for Any One Day (mg/l)**	**Monthly Average Shall Not Exceed (mg/l)**
Cadmium	0.06	0.03	0.69	0.26
Chromium	0.56	0.26	2.77	1.71
Copper	-	-	3.38	2.07
Lead	0.72	0.27	0.69	0.43
Nickel	-	-	3.98	2.38
Silver	-	-	0.43	0.24
Zinc	0.80	0.33	2.61	1.48
Cyanide[a]	-	-	1.20	0.65
Cyanide[b]	-	-	0.86	0.32
Fluoride	35.0	18.0	-	-
TTOc	1.58	-	2.13	-
TSSd	46.0	24.0	-	-

a Total cyanide concentration.

b Alternative cyanide amenable to chlorination limits for facilities with cyanide treatment, upon agreement of the pollutant control authority.

Table 13.8.7.1
Practical Decontamination Methods For Facility Equipment and Structures

	Material					
Contaminant	**Metal**	**Concrete**	**Brick**	**Plastic**	**Glass**	**Wood**
Asbestos	2,6[b]	2,6	2,6	2,6	2,6	2,6
Acids	1,3,5	1,3,5	1,3,5	3,5	3,5	3,5
Alkalis	1,3,5	1,3,5	1,3,5	3,5	3,5	3,5
Heavy Metals and Cyanides	1,2,3,4,5	1,2,3,4,5	1,2,3,4,5	2,3,4,5	2,3,4,5	2,3,4,5
Organic	1,3,4,5	1,3,4,5	1,3,4,5	3,4,5	3,4,5	3,4,5

a Guide for Decontaminating Buildings, Structures, and Equipment at Superfund Sites. March 1985. EPA/600/2-85/028. U.S. Environmental Protection Agency (EPA) Hazardous Waste Engineering Research Laboratory.
b Refer to legend on next page for a description of decontamination methods.

Table 13.8.7.1
Practical Decontamination Methods For Facility Equipment and Structures (continued)

Legend:

1. **Water Washing** - Physical removal of contaminates from the surface of equipment or structures by washing and rinsing. Water washing is usually performed in conjunction with other decontamination efforts, such as wiping. Rinse water may have to be treated and/or disposed of as a hazardous waste at a RCRA-permitted hazardous waste facility (refer to 40 CFR 261 for definition of hazardous waste)

2. **Dusting, Vacuuming and Wiping** - Physical removal of hazardous dust and particles from the surface of equipment and structures by common cleaning techniques. Damp cloth soaked with warm water or solvent can be used to decontaminate surfaces not practically treated with a vacuum. the cloth or wipe, and vacuum bag may have to be treated and/or disposed of as a hazardous waste at a RCRA-permitted hazardous waste facility (refer to 40 CFR 261 for definition of hazardous waste).

3. **Absorption** - Absorbent material for picking up liquid contaminants immediately following liquid contaminant spills. Used absorbent material may have to be treated and/or disposed of as hazardous waste at a RCRA - permitted hazardous waste facility (refer to 40 CFR 261 for definition of hazardous waste).

4. **Solvent Washing** - An organic solvent is circulated across the surface of equipment or structures to solubilize contaminants. The spent solvent may have to be treated and/or disposed of as a hazardous waste at a RCRA - permitted hazardous waste facility (refer to 40 CFR 261 for definition of hazardous waste).

5. **Steam Cleaning** - Steam cleaning physically extracts contaminants from the surfaces of equipment and structures. The steam is applied by hand held wands or automated systems, and the condensate is collected for treatment or disposal. The treatment residue may be treated and/or disposed of as a hazardous waste at a RCRA - permitted hazardous waste facility (refer to 40 CFR 261 for definition of hazardous waste).

6. **Removal** - Asbestos-containing materials are removed to prevent the release of asbestos fibers into the air. Replacement of the removed material with a non-asbestos material may be necessary to comply with building codes or fire codes. All asbestos-containing waste must be sealed into impermeable bags or containers. These containers are labeled in accordance with OHSA regulation 29 CFR 1910.1001 and disposed of in approved landfills in accordance with EPA regulation 40 CFR 61.25

TABLE 13.16.4.1

SAMPLING POINTS AND PORTS OF TYPE "A" EMISSION POINTS

Section 1.2.3 Sampling Points

The sampling point is the location on a source or its related control equipment where samples are taken. For purposes of determining compliance with District Regulations, samples taken at a sampling point shall be deemed identical to those at the point of emission to the atmosphere. The Regulations address themselves to Type "A" and "B" emission points.

The primary consideration for location of a sample port shall be that the sample port location accurately represents the nature, extent, quantity and degree of the contaminant at the emissions point. Ports shall be located, if reasonably possible, at a Type "A" sample point.

Section 1.2.3.1 Sampling at Type "A" Emission Points

A Type "A" sample point shall be located in a smooth stack at least eight stack diameters downstream of any bends, inlets, constriction, flow altering device or change of area or geometry and two diameters upstream of the stack exit or other flow disturbance. For a non-circular duct, the equivalent diameter will be determined from the following equation:

Equivalent Diameter = $_2$(length x width/length + width)

Section 1.2.4.1 Sampling Ports

For circular ducts, at least two ports 90 degrees apart on a plane perpendicular to the longitudinal axis of the duct shall be installed at the sample point. For circular ducts, ten feet in diameter or greater, four ports 90 degrees apart on a plane perpendicular to the longitudinal axis shall be installed.

For non-circular duct, access shall be provided to the entire cross sectional area of the duct.

Each port, where possible, shall be a nominal three inch diameter pipe with external tapered pipe threads.

Ports shall be installed flush with the interior stack wall. Gate valves should be installed on sample ports only when extreme stack conditions or the presence of hazardous materials require such devices for safety considerations.

Questions concerning locations should be referred to the Chief of Source Test.

SECTION 14
EQUIPMENT ENGINEERING DESIGN STANDARDS

14.1 GENERAL

14.1.1 Correlation and Coordination

A. This section provides standards for the Equipment Engineering design work. These design standards shall correlate with the current edition of Lockheed Martin Missiles & Space (LMMS) Facility Engineering Standards (FES), Construction Specifications Volumes I through IV, and other relevant sections of this Facility Design Standards. Where applicable, the Engineering Construction Details delineated in the FES Construction Specifications shall be used for compatibility to LMMS existing facilities design.

B. The Equipment Engineering design work shall be designated under the current Construction Specifications Institute (CSI) format.

C. The design shall be fully coordinated with other related architectural and engineering disciplines to eliminate conflicts and omissions, and to ensure that the total project requirements are met. Prudent judgment must be exercised in collaborating design solutions with LMMS organizations and personnel.

D. All design/construction drawings shall follow LMMS drawing procedures and standards, unless specifically described otherwise in specific Sections of this Facility Design Standards. Refer to Section 11, Drawing Procedures for all drawing requirements.

14.1.2 Design Philosophy

The design shall be done in a manner to assure that the maximum benefit is obtained for the costs expended. Safety and reliability shall not be compromised as a cost saving measure. The methods of analysis and design shall follow established principles of professional engineering practices. Value Engineering is encouraged during the development of the design work.

14.1.3 Codes and Standards

Design work shall comply with the current adopted edition of all applicable city, county, state and federal codes and standards. In addition, the current adopted edition of the following codes, standards and publications are considered as the governing references to this section. Applicable recommendations of related trade and professional associations not listed here shall also be considered.

Underwriters Laboratory (UL) Approval, for applicable components
National Electric Code (NEC)
Occupational Safety and Health Administration (OSHA)
National Electric Manufacturer's Association (NEMA)

14.1.4 Design Review Process (Requirements & Deliverables at Each Design Phase)

A. 0% Pre-Design Concept

1. Assumptions and Constraints

2. Schedule of Deliverables

3. Schedule of Pre-purchased Equipment

4. Design Concept – Project Engineer will provide design methodology to pursue.

5. Requirements

B. 30% Design Review Requirements

1. Include all comments and requirements from all previous reviews.

2. Equipment Power and Heat Load Requirements

3. Physical Equipment Dimensions & Weight

4. Bill of Materials (complete with manufacturers)

5. Maintenance and Access Requirements

6. Basic Preliminary Drawings

7. Completed Site Investigation by Design Engineer

8. Cut Sheets of Proposed Equipment

9. Preliminary Schedule

10. LEED Checklist, if applicable

11. Identify all long lead items.

12. Identify any preliminary meetings with city.

13. Identify code, government, and municipal requirements.

14. Identify supplemental specs.

15. Identify preliminary pertinent existing utilities.

C. 60% Design Review Requirements

1. Include all comments and requirements from all previous reviews.

2. Updated Bill of Materials & Cut Sheets, if applicable.

3. Acceptance Test Procedures

4. Updated Schedule

5. Preliminary Point of Connection matrix shall be completed and submitted to Lockheed Martin. Information shall highlight all outages required and known areas impacted.

6. Supplemental Specification Requirements

7. Specifications shall be substantially complete.

8. Identify failure modes and interlocks

9. Identify acceptable manufacturers for each item of equipment including specific manufacture's catalog numbers or equipment type.

10. Sections covering all equipment and devices.

11. Specific installation information for all equipment and devices.

12. A detailed testing and inspection section.

13. Long lead items shall be ordered.

14. Define any training requirements.

15. Design scope of work shall be locked in.

D. 90% Design Review Requirements

1. Include all comments and requirements from all previous reviews.

2. Any changes to the project requirements at this stage must be made by Lockheed Martin.

3. The effort between the 60% and the 90% submittal should be primarily drafting and issue resolution.

4. Equipment Layout and Delivery Path

5. Final proposed Point of Connection matrix shall be completed and submitted to Lockheed Martin. Information shall highlight all service and utility outages required and known areas impacted.

6. Contractor shall submit a comprehensive risk plan and formal cost proposal

7. Submit all Controls drawings (SoO, P&ID, ladder logic, wiring diagram, etc.)

8. Updated drawings showing incorporated elements from the Project Engineering review

9. Updated Bill of Materials & Cut Sheets, if applicable

10. Updated Schedule

E. 100% Complete/ Issued for Construction

1. Submit a complete full size set of project design documents and specifications for final approval and sign off.

2. Submit 100% package electronically per established procedure.

3. Provide bidding and permitting documents as required.

4. At the end of the bid period update the drawings and specifications to include all Addenda. These documents shall be the contract set. Submit 8 half size sets to Lockheed Martin Team.

F. After 100% Issued for Construction

1. Any design changes, substitutions, and modifications must be submitted to the Project Engineering Team for approval

14.2 DESIGN CONSIDERATIONS

14.2.1 Material

All material and components used in the manufacture of the equipment and furnished as a part thereof shall be new and of the highest quality to ensure reliability and compatibility with the requirements of this standard.

14.2.2 Workmanship

All work shall be performed in a workmanlike manner by craftsman of recognized skills and shall be in accordance with the highest standards of the skills involved.

14.2.3 Interchangeability

All parts and components shall be manufactured to definite engineering standards and tolerances permitting field installation of factory furnished replacements without modification.

14.3 RUNNING TIME METERS

The purpose of this section is to establish installation procedures for running time meters on the typical indicated equipment categories in order to provide the most meaningful data on equipment utilization.

14.3.1 Installation Requirements

	Typical Equipment	Standard Installation
A.	N.C. machines, borers, drills, grinders, engravers, mills, rate tables, micro gee tables, centrifuges, material test machines, heat system, deaerators, wire-machines, mechanical vibrators, micro plotters, magnetic tape recorders, oscillographs, recorders, load programmers	Meter shall operate whenever power is applied to cause operation of the spindle, arm, table, paper or tape drive, or radiant programmer (load, temperature or making pressure)
B.	Tatna II material test machine, brakes, rollers, punch presses, shear, benders, welders, generators, power supply, x-ray film processors, resolvers	Meter shall operate when “power-on” switch is energized
C.	Flight simulation tables, marginator type programmers, electrical chemical milling	Meter shall operate when hydraulic or solution pumping power is turned “on”

	machines, electrical discharge machines	
D.	Power amplifiers	Meter shall operate when high voltage is applied to final amplification stage
E.	Shakers	Meter shall operate when D.C. field is energized
F.	Automatic random vibration equalizer/ analyzers	Meter shall operate when compensator transmits a signal to any external load (not on internal closed loop operation)
G.	Shock spectrum consoles	Meter shall operate when any analyzer frequency channel is selected
H.	Shock machines	Meter shall operate when drop carriage is raised or lowered
I.	Chambers	Meter shall operate when chamber altitude, temperature, humidity or pressure recorders are turned on
J.	Hydraulic test stands	Meter shall operate when hydraulic pressure is applied to item in test
K.	X-rays machines	Meter shall operate when power is applied to the x-ray emission tube
L.	Ultrasonic analyzers	Meter shall operate when power is applied to initiate scanning action
M.	Data acquisition system	Meter shall operate when system is recording and playing back data
N.	Transistor testers and integrated circuit testers	Meter shall operate when each parameter of semiconductor or integrated circuit is tested
O.	Heavy duty power supplies	Meter shall operate when unit is producing an output voltage
P.	Model 20 DITMCO analyzer	Meter shall operate when power is applied to the full voltage lamps
Q.	Model 4505 DITMCO analyzer	Meter shall operate when power is applied to the function switch
R.	Permanently attached items and items not powered	No meter required

14.4 PRESSURE GAUGES

Not available at this printing.

14.5 GUARDING FOR MACHINE TOOLS

Not available at this printing.

14.6 CAROUSEL FIRE PROTECTION REQUIREMENTS

Not available at this printing.

END OF SECTION

SECTION 15
CLEANROOM DESIGN STANDARDS

15.1 GENERAL

15.1.1 Correlation and Coordination

A. This section provides the standard for cleanroom design. These design standards shall correlate with the current edition of Lockheed Martin Space Systems (LMSSC) Facility Engineering Standards (FES), Construction Specifications Volumes I through IV, and other relevant sections of this Facility Design Standards. Where applicable, the Engineering Construction Details delineated in the FES Construction Specifications shall be used for compatibility to LMSSC existing facilities design.

B. The Cleanroom design work shall be designated under the current Construction Specifications Institute (CSI) format.

C. The design shall be fully coordinated with other related architectural and engineering disciplines to eliminate conflicts and omissions, and to ensure that the total project requirements are met. Prudent judgment must be exercised in collaborating design solutions with LMSSC organizations and personnel.

D. All design/construction drawings shall follow LMSSC drawing procedures and standards, unless specifically described otherwise in specific Sections of this Facility Design Standards. Refer to Section 11, Drawing Procedures for all drawing requirements.

15.1.2 Design Philosophy

The design shall be done in a manner to assure that the maximum benefit is obtained for the costs expended**.** Safety, quality, reliability, and maintainability shall not be compromised as a cost saving measure. Incorporation of energy-saving and pollution-reducing measures, including pursuit of LEED Silver certification, is encouraged and may be required; consult with LMSSC project manager. Refer to specification section 01 81 13 for specific LEED requirements.

The methods of analysis and design shall follow the established principles of professional engineering practice. Value Engineering is encouraged during the development of the design work.

15.1.3 Scope

This specification is intended to provide guidance for the design and construction of all new cleanrooms which have not begun the design phase as of the date of initial issue of this document. However, where possible and reasonable, any/all existing cleanrooms should be brought into compliance. Those existing cleanrooms which do not currently meet one or more of the requirements as stipulated in this specification must have an associated document (e.g. Cleanroom Operating Procedure, Contamination Control Plan, etc.) written for each specific cleanroom facility, identifying the specific requirements for that facility which will supersede the requirements contained here within.

15.1.4 Codes and Standards

Design work shall comply with the current adopted edition of all applicable city, county, state and federal codes and standards. In addition, the current adopted edition of the following codes, standards and publications are considered as the governing references to this section. Applicable recommendations of related trade and professional associations not listed here shall also be considered.

Leadership in Energy and Environmental Design (LEED)
International Code Council (ICC)
National Fire Protection Association Standards (NFPA)
Occupational Safety and Health Administration (OSHA)
American Society of Heating, Refrigeration and Air Conditioning Engineers (ASHRAE)
California Building Code (CBC)
California Code of Regulations Title 24
Local Municipal Codes
Federal Standards 209
International Standards (ISO)
Institute of Environmental Sciences and Technology (IEST),
Recommended Practices
Product Assurance Standards
Lockheed Aircraft Corporation (LAC) Standards
LMSSC ESD Control Standards

15.1.5 Reference Documents

- Federal Standard 209 (Current Revision): Airborne Particulate Cleanliness Classes in Cleanrooms and Clean Zones
- Lockheed Aircraft Corporation (LAC) Standards 3026
- 2.4.2-T1-SpecEng-6.1-S: LMSSC ESD Control Standard
- IEST, RP-CC001.3: HEPA and ULPA Filters
- IEST, RP-CC-002-86: Laminar Flow Clean Air Devices
- IEST, RP-CC006.2: Testing Cleanroom
- IEST, RP-CC007.1: Test ULPA Filters
- IEST, RP-CC012.1: Consideration in Cleanroom Design
- IEST, RP-CC-013-86-T: Equipment calibration or validation procedures
- ISO 14644-1: Cleanrooms and Associated Controlled Environments; Part 1 – Classification of Air Cleanliness
- ISO 14644-2: Cleanrooms and Associated Controlled Environments; Part 2 – Specifications for Testing and Monitoring to Prove Continued Compliance with ISO 14644-1
- ISO 14644-4: Cleanrooms and Associated Controlled Environments; Design, Construction and Start-up
- IEST-STD-CC1246D: Product Cleanliness Levels and Contamination Control Program
- LAC 3250: Protection of Electrostatic Discharge Susceptible (ESDS) Parts and Assemblies
- Product Assurance Standards 8620-Q002
- IEC/EN55011: Equipment that generates or uses RF energy
- IEC/EN55015: All Lighting equipment, luminaries and ballasts
- IEC/EN50081/2: Anything else industrial
- IEC/EN55022: ITE equipment
- IEC/EN61000-3-2 thru –3-6: Main Harmonics from single, 3-phase, MV or HV Supplies

15.1.5 Design Review

A. The Contamination Control Engineering Department (O/7B1CS) is to be included in all phases of the design and review for all cleanroom builds and major rearrangement projects. All aspects of the design and drawings must be reviewed and approved in writing by an authorized representative of the CC Department.

15.2 DESIGN CONSIDERATIONS

15.2.1 Design Criteria

A. The classes of cleanliness specified here are for the level of environmental cleanliness practice occurring during operation in the clean room. Listed below are the LMSSC clean room requirements in addition to the codes/standards. The room may measure much cleaner when there are no manufacturing or operating activities.

B. Filters are to be certified by **AMBIENT CHALLENGE ONLY**. DOP or PSL challenge will **NOT** be accepted and will be grounds for rejection.

C. Room air changes must be determined by the following formula: (Average airflow velocity at filters x total area of filters x 60/cubic area of room)

A. **ISO Class 3 and 4** (Fed-Std-209 Class 1 and 10 (respectively)) **Controlled Environments**

1. Vertical Air Flow/Unidirectional

a.	Description	Unidirectional air flow design, tunnel/service chase design with equipment installed in service chases
b.	Air filtration	ULPA filters, 99.99997% efficiency at 0.12 microns
c.	Room air changes	Room air changes 600-750 per hour using ceiling supply and raised floor return. No ceiling returns or designed-in horizontal flow will be allowed.
d.	Air Velocity	90 fpm +/- 20% at ULPA filter (6” below filter face) The mixing of filters to achieve areas of higher and lower air velocity will not be allowed. Air velocity is to be controlled throughout the entire room via the use of re-circulation fan speed controls.
e.	Filter coverage	100% with knife edge ULPA filters and Bio-Med Polyurethane gel seal (preferred) or gasket systems capable of providing equivalent sealing integrity
f.	Total Hydro Carbon (THC), when required	Less than 10 ppm

NOTE: Class 1 may entail utilizing a “glove box”.

B. **ISO Class 5** (Fed-Std-209 Class 100) **Controlled Environments**

1. Vertical Air Flow/Unidirectional

a.	Description	Unidirectional air flow design
b.	Air filtration	HEPA filters, 99.99% efficiency at 0.3 microns or ULPA filters, 99.99997% efficiency at 0.12 microns
c.	Room air changes	500-600 per hour using ceiling supply and raised floor return. No ceiling returns or designed-in horizontal flow will be allowed.
d.	Air Velocity	90 fpm +/- 20% at ULPA/HEPA filter (6" below filter face) . The mixing of filters to achieve areas of higher and lower air velocity will not be allowed. Air velocity is to be controlled throughout the entire room via the use of re-circulation fan speed controls.
e.	Filter coverage	100%

C. **ISO Class 6** (Fed-Std-209 Class 1000) **Controlled Environments**

1. Vertical Air Flow/Unidirectional

a.	Description	Unidirectional air flow design
b.	Air filtration	HEPA filters, 99.99% efficiency at 0.3 microns
c.	Room air changes	300-400 per hour (less than 30 feet high). No ceiling returns allowed.
d.	Air Velocity	90 fpm +/- 20% at HEPA filter (6" below filter face) The mixing of filters to achieve areas of higher and lower air velocity will not be allowed. Air velocity is to be controlled throughout the entire room via the use of re-circulation fan speed controls.
e.	Filter coverage	≥80% ceiling coverage

D. **ISO Class 7** (Fed-Std-209 Class 10,000) **Controlled Environments**

1. Vertical Air Flow/Unidirectional

a.	Description	Unidirectional air flow design
b.	Air filtration	HEPA filters, 99.97% efficiency at 0.3 microns
c.	Room air changes	≥40 per hour (less than 30 feet high). No ceiling returns allowed.
d.	Air Velocity	40 - 80 fpm +/- 20% at HEPA filter (6" below filter

face). The mixing of filters to achieve areas of higher and lower air velocity will not be allowed. Air velocity is to be controlled throughout the entire room via the use of re-circulation fan speed controls.

e. Filter coverage ≥80% ceiling coverage

2. Vertical Air Flow/ Non-unidirectional (less than 30 feet high)

a. Description Non-unidirectional air flow design

b. Air filtration HEPA filters, 99.97% efficiency at 0.3 microns

c. Room air changes ≥40 per hour (less than 30 feet high)

d. Air Velocity Minimum to be determined by specific design and equipment requirements to meet air change requirements, 110 fpm maximum at HEPA filter (6" from face). The mixing of filters to achieve areas of higher and lower air velocity will not be allowed. Air velocity is to be controlled throughout the entire room via the use of re-circulation fan speed controls

e. Filter coverage ≥30% ceiling coverage

.

3. Vertical Air Flow/ Non-unidirectional (greater than 30 feet high)

a. Description Non-unidirectional air flow design

b. Air filtration HEPA filters, 99.97% efficiency at 0.3 microns

c. Room air changes ≥10 per hour (greater than 30 feet high)

d. Air Velocity Minimum to be determined by specific design and equipment requirements to meet air change requirements, 110 fpm maximum at HEPA filter (6" from face). The mixing of filters to achieve areas of higher and lower air velocity will not be allowed. Air velocity is to be controlled throughout the entire room via the use of re-circulation fan speed controls

e. Filter coverage ≥30% ceiling coverage

E. **ISO Class 7 and 8** (Fed-Std-209 Class 10,000/100,000 (respectively)) **Controlled Environments**

1. Class 10,000/100,000 Horizontal Air Flow

a. Description Unidirectional air flow design

b. Air filtration HEPA filters, 99.97% efficiency at 0.3 microns

c. Room air changes ≥50 per hour

d. Air Velocity Minimum to be determined by specific design and equipment requirements to meet air change requirements, 110 fpm maximum at HEPA filter (6" from face). The mixing of filters to achieve areas of higher and lower air velocity will not be allowed.

	Air velocity is to be controlled throughout the entire room via the use of re-circulation fan speed controls.
e. Filter coverage	≥90% inlet wall coverage

2. Class 100,000 Vertical Air Flow

a. Description	Non-unidirectional air flow design
b. Air filtration	HEPA filters, 99.97% efficiency at 0.5 microns
c. Room air changes	≥10 per hour (greater than 30 feet high)
d. Air Velocity	Minimum to be determined by specific design and equipment requirements to meet air change requirements, 110 fpm maximum at HEPA filter (6" from face). The mixing of filters to achieve areas of higher and lower air velocity will not be allowed. Air velocity is to be controlled throughout the entire room via the use of re-circulation fan speed controls
e. Filter coverage	≥10% ceiling coverage

F. General

1. Temperature	73 degree +/- 5 degree F (unless otherwise specified)
2. Humidity	20-50% RH (unless otherwise specified)
3. Pressurization	All cleanrooms shall be pressurized to 0.05 inch WC (minimum) above adjacent ambient spaces and 0.02 inch WC (minimum) above adjacent dirtier class cleanrooms. In addition, all rooms shall be designed such that pressure is highest in "cleanest" area, then cascade downward accordingly to "dirtiest" area or a ambient environment

15.2.2 Layout (ISO Class 3 through 8 (Fed-Std-209 Class 1 through 100,000 (respectively)) **Controlled Environments)**

A. Provide layout of the clean room indicating material vs. people flow patterns.

B. Cleanroom Ancillary Support Areas

1. Gowning Rooms

1.1. Provide detail of gowning room. Figure 15.2.2 represents typical requirements for LMSSC entryway/gowning room. The entry area provides a psychological transition to clean manufacturing procedures. Besides providing controlled entry and exit points to regulate incoming contamination, it allows a distinction between the dirty outside environment and the conditioned clean manufacturing atmosphere.

1.2 Gowning rooms shall have a minimum three stage protocol segregation between the critical, certified cleanroom environment and the outside, ambient non-controlled environment

1.2.1 Stage 1: design area concept to provide a location adjacent to the main change room for personnel lockers for controlled locker functions in a maintenance controlled zone in non-controlled environment. This area will be used for personnel to remove and store high fibrous sweaters and/or any other personal, non-cleanroom approved material prior to entering gowning area.

1.2.2 Stage 2: will serve as the main change room. It will be equal to or no less than one cleanroom Class higher ("dirtier") than the class of the cleanroom being served. This room will contain hanging cleanroom garment storage, supplies of: gloves, masks, clean packaged garments, etc. The supply cabinets will be arranged in a manner which allows stocking from a clean support area. The dirty garment disposal will also be located so that it can be accessed without going into the main change room. In addition, this stage will have operator grounding test stations.

1.2.3 Stage 3: shall consist of an air lock (minimal – may be an air shower), with double interlocking doors, to act as Stage 3 and a physical barrier to prevent any interaction of change room air with critical cleanroom environment during personnel entry..

1.2.4 The traffic flow through the change rooms should be one-way if space and layout consideration allow.

1.2.5 Cleanrooms within a cleanroom (e.g. welding booths, etc.) may consist of secondary garmenting areas prior to entry from main cleanroom into higher, sub clean zone.

1.2.6 Entryway/gowning room to provide:

- Air shower or air lock
- Shoe brush (with central vacuum or HEPA filtered exhaust) and tacky mats
- Bench
- House vacuum outlet
- Garment storage area for cleanroom garments and gloves (cleanroom garments should have separate hanging booth for 300K and 100K and HEPA filtered down flow booth for Class 10K to Class 1)
- Equipment storage
- Janitorial supplies/Deionized water sink for cleaning

2. Janitorial Support Area

2.1 Adjacent to the change room and accessible from the main cleanroom, a janitors room must be provide. This room must be no more than one class lower than the cleanest cleanroom being serviced. The room should be large enough to accommodate all of the necessary cleaning supplies as well as having a floor mounted "slop" sink to be used for disposal of water from floor mopping, wall cleaning, etc. The janitor room must also have a supply of D.I. water for filling cleaning buckets. Where practical and necessary janitorial pass-throughs for incoming cleaning materials and outgoing trash should be provided.

3. **Tooling Staging/Preparation Area**

3.1 Areas used for the cleaning and preparation of tooling for supply to the cleanroom areas shall have a minimum 2 stage segregation between the critical, certified cleanroom environment and the outside, ambient non-controlled environment

3.1.1 Stage 1 shall be used for wiping and gross cleaning of tooling prior to passing to next stage. It should be no more that 2 orders of magnitude higher Class ("dirtier") than the cleanroom proper, with a high maintenance zone being a minimum for this area.

3.1.2 Stage 2: A physical barrier shall separate Stage 2 from Stage 1. This area shall be used for final, precision cleaning of the tooling and passing into the cleanroom area. A physical barrier shall separate the Stage 2 from the final certified cleanroom. It should be equal to or no less than one cleanroom Class higher ("dirtier") than the class of the cleanroom being served.

4. Pass-throughs

4.1 Pass-throughs may be added at locations as determined by M&P Contamination Control Engineering Department (O/7L5S) or end user customer.

4.2 All pass-throughs shall be assesses for required compliance with ESD requirements. Where required, pass-throughs should be constructed of electrostatic dissipative materials and grounded. All interiors must be made of stainless steel - no laminates will be allowed.

4.3 All pass-throughs shall have doors which are mechanically interlocked or electrically alarmed to prevent simultaneous opening of both doors. Mechanical interlocking devices must be "clean" by design. Devices such as the "nut and bar" type which use a rotation bar at the end of a long nut are not acceptable. Where required, outer doors must be ESD compatible material - Lexan with Eslon overcoat is preferred.

15.2.3 General Requirements

A. All floor, wall or ceiling fixtures shall not allow air or moisture to penetrate into the cleanroom and shall be flush with the finished surfaces.

B. **Physical Barriers**

1. Under no circumstances will any direct interaction between the cleanroom proper environment and the outside, non-controlled environment be permitted. Use of multiple stage designs such as those identified for the specific areas are required, in addition to other controls such as double interlocking door pass-throughs and double interlocking door and window systems, to ensure integrity of differential pressure gradients, prevention of change in laminarity of air flow, and particle migration from direct interaction of adjacent areas.

C. ESD

1. The clean room shall be free of static electricity as determined by program requirements. All interior room surfaces shall be semi-conductive, unless otherwise specified by project requirements.
2. All grounding lines to be installed below floor level.
3. Floor grounding shall provide a resistance of 2.5×10^4 ohms to 10^7ohms
4. Provision for connection of Common Point Ground S/S connectors or buses to the AC ground line spaced at approximately </= 6 foot intervals.
5. EMI Emission from Lightings, Ballasts, Power Supplies, Electrical equipment, etc, should comply with IEC/EN55011, 55014, 55015, 50081 and 50082 standards.
6. RFI or EMI immunity requirements should comply with IEC/EN61000-4-2 through –4-6
7. Mains Harmonics, single or 3 phase, MV or HV supplies, should meet requirements set by IEC/EN61000-3-2 through –3-6.

D. Electrical Requirements

1. All electrical and mechanical outlets in the cleanroom shall be installed in an approved height pattern and shall be sealed to prevent air and moisture penetration.
2. Light fixtures shall provide a minimum 500 lux at 1 meter above floor (100 foot candles at working surface) .
3. Light fixtures shall be flush mounted and sealed fixtures.
4. Light fixtures, lamps, tubes and lenses shall be thoroughly cleaned prior to installation.
5. Electrical boxes shall be flush mounted in the cleanroom walls and all conduit is to be run within or behind the cleanroom walls or beneath the raised floor.
6. Panels and control items, switches, etc., shall be flush mounted or kept out of the cleanroom entirely and installed in a service/utility area adjacent to the cleanroom.
7. Teardrop lighting fixtures should not be used in cleanrooms of ISO Class 4 and 3. The main application for teardrop lighting is for ISO Class 5. ISO Class 6 or dirtier rooms would normally not have 100% filter coverage and can use drop-in, face-flush, T-bar style, sealed cleanroom light fixtures.
8. Only one Earth Ground shall be used as a common AC Ground located at the Main Control Panel.
9. Provide an Emergency Notification System to LMSSC standards when required by project requirements

E. **Utility Services**

1. Utility services provided for the cleanroom must be designed, located and installed such that the cleanroom is not compromised by contamination from such services. Exposed piping, tubing and cable runs within the cleanroom are only allowed where other alternatives are not feasible. In general, these services must be routed in external areas, such as under the raised flooring, in air return chases, internal wall structures, etc., and termination points should be flush mounted to provide final connection point. Where services may penetrate into cleanroom, material make-up of service structure, such as pipe housing, cable housing, buss enclosure, etc. must be approved for use in the cleanroom by M&P Contamination Control Engineering Department (O/7L5S) group prior to installation.

F. **Vacuum Systems**

1. A vacuum system with adequate capacity to meet the requirements of the manufacturing/assembly process, must be installed.

   1.1 Process vacuum: To support the manufacturing/assembly process, the vacuum system shall be designed for a maximum vacuum capability meeting vacuum pressure (inches of mercury) and vacuum flow (cfm), under full load (100% duty cycle), at point of use, to support the manufacturing/assembly process requirements. The system should be installed as a loop to prevent areas of excessive vacuum drop.

   1.2 House vacuum: Vacuum systems utilized for house vacuum applications must have exhausts located outside of the building

G. D. I. Water Source

1. If a new D.I. water system will need to be installed as part of the fit-up of the new cleanroom, the system specification details will need to be based on the cleaning strategy and other usage. As general guide, DI system must be compliant with requirements per ASTM E-2 or better (E-1). Some of the general feature of the system which should be included are:

1.1 The system will have constant re-circulation with polishing and UV sterilization. Dead-legs at equipment should be restricted to 4 pipe diameters and should not exceed 12” maximum in any case. No dead-legs are allowed in the re-circulation loop. The water purity will be capable of being controlled between 16 and 18 mega ohms at the pad, and 14 mega ohms maximum at the point of use. R.O. water pre-treatment to a minimum of 500,000 ohms is desirable.

1.2 All plumbing shall be BCF, PVDF or stainless steel, 3/4” pipe size will be the minimum diameter used anywhere in the system.

1.3 Provision for periodic system sterilizations will be designed into the initial installation.

1.4 Provision shall be made for reclaim and reuse of D.I. water with filtration for adequate removal of organics, particles and surfactants.

1.5 System filtration shall be a minimum of 0.5 microns, with 0.02 micron filtration at equipment and other critical points of use.

1.6 All supply valves shall be Teflon layered diaphragm valves with PVDF body.

1.7 On-line monitors for T.O.C., resistivity, system pressure and flow/usage rate, must be provided.

H. Gas Delivery Systems

1. All gas plumbing tubing/supply lines shall be degreased and cleaned to meet a minimum IEST-STD-CC1246D, Level 100 particle cleanliness.

1.1 In the event specific customer/end user requirements exist which exceed this minimal requirement, customer/end user requirements shall prevail

1.2 If plumbing tubing/supply lines are cleaned and prepared off-site by contractor, plumbing tubing/supply lines shall delivered to LMSSC with ends capped and wrapped in LMSSC approved plastic.

1.3 Plumbing tubing/supply line installation process must be defined and reviewed and approved by LMSSC (including M&P Contamination Control Engineering Department (O/7L5S)) to ensure minimum contamination exposure during plumbing tubing/supply line installation

1.4 A point-of-use filtration system may be required to meet customer/end user requirements

1.5 All gases that enter into the cleanroom shall be tested and certified to have less than 15 ppm hydrocarbons in the system

1.6 For application requiring CDA, the following shall be the minimal requirements for the system in cases where no specifications or requirements are available:

PARAMETER	***MEASUREMENT UNIT***	***NOMINAL / ACHIEVABLE***	***ALERT LEVEL***	***CRITICAL ACTION LIMIT***
Moisture	**PPB**	**1000**		
Moisture (Dew point)	**Temperature ° F (° C)**	**- 100 (- 73)**	**- 40 (- 40)**	**- 30**
Hydrocarbon Equivalent	**PPB**	**ND***	**50**	**100**
Condensed Oil	**mg/m^3**	**None**	**None**	**None**
Halogenated	**PPB**	**ND***	**50**	**100**

Solvent		**(None)**		
Chloride	**PPB**	**ND***	**50**	**100**
Sulfur SO_X	**PPB**	**ND***	**50**	**100**
Sulfur SOx	**PPM (v/v)**	**ND***	**0.05**	**0.1**
Nitrogen NO, NO_X	**PPB**	**ND***	**500**	**100**
Nitrogen NO, NOx	**PPM (v/v)**	**ND***	**0.05**	**0.1**
Particles (> 0.3 μ M)	**Particles / ft^3 ****	**ND***	**5**	**10**

* ND = Not Detectable

** Corrected for Standard Temperature & Pressure

15.2.4 Architectural Requirements

A. Floors

1. Floors shall be sealed concrete and covered with sheet vinyl, epoxy coating, or special flooring as approved by the architectural group of LMSSC Facility Engineering Organization and clear of any obstructions. All joints must be flush and sealed. Materials used shall be suitable for the clean room with manufacturer's written confirmation of certification submitted.

1.1 For ISO Class 5 or better cleanrooms, a raised floor system is required:

1.1.1 As required by customer/end user, the raised floor system may be static dissipative and grounded. In the absence of defined requirements, the minimum requirements shall be as follows (customer/end user requirements will supersede minimum requirements):

1.1.1.1 The surface resistivity, as measured on the surface of the panel between two electrodes, per EOS/ESD S7.1 test method, should be $> 1 \times 10^6$ and $<1 \times 10^9$ ohms @ 100 volts minimum.

1.1.1.2 The surface resistance from any panel as measured between one electrode on the panel to a ground terminal, per test method EOS/ESD S7.1 standard, must be between 2.5×10^4 and 1×10^7 ohms @ 100 volts minimum.

1.1.2 In locations which are susceptible to earthquakes the floor must be seismic braced to withstand a minimum lateral acceleration of 1G in the horizontal plane, This requirement may be superseded by customer/end user requirements

1.1.3 The floor system must have stringers frames with grounding pads at the meeting points of all panels.

1.1.4 Flooring must be capable of supporting maximum weight loads (pounds per square inch) as required by customer/end user without floor failure or creation of deficiencies such as bowing, sagging, loss of point to point conduction, etc.

1.1.5 Flooring must provide adequate vibration dampening per customer/end user requirements

B. **Surface Finishes and Cleanliness Maintenance**

1. All exposed materials should be suitable for effective and frequent cleaning, and offer no surface asperities or porosity which will allow retention of particulate and/or chemical contamination. Walls, floors, and ceilings must be designed and constructed in such a way that the surfaces are accessible for cleaning. In a completed installation, all internal surfaces should be finished suitably smooth, non-porous and free from cracks, cavities, steps and ledges. The design must be such that the number of steps, ledges, cavities and similar features where contamination could collect is minimized. The number of corners must be kept to a minimum, particularly internal corners. Corners and junctions should be radiused where possible, especially at the floor-to-wall and wall-to-wall junctions so that effective cleaning is facilitated. The finish should be compatible with the mechanical and chemical effects of the intended methods of cleaning.

2. Windows and Doors

   2.1 Windows and doors must present as few horizontal surfaces as possible, with particular attention being paid to minimization of steps and ledges. For internal, cleanroom areas, windows may not have ledges or sills, and molding/trims must be kept to minimal thickness, preferably utilizing sloping surfaces. All directional changes with surfaces shall be round. For doors, minimization of the abrasion from the mechanical elements of the door (e.g. latches, locks, hinges), and also between the door and its frame and the floor. Door handles, where required, should be smooth, non-snagging and easy to clean. Consideration should be given to the use of push plates, automatic openings, or appropriate door-swing direction where contamination transfer is a concern. Molding/trims must be kept to minimal thickness, preferably utilizing sloping surfaces.

   2.2 All doors associated with the cleanroom (internal and perimeter) must be compatible with the cleanroom class. The doors for the Stage 2 and 3 change rooms should be class compatible, automatic, sliding glass doors. Where door seals are required, they must mechanically operated drop type made of aluminum or stainless steel. The sealing gasket material must be low outgassing and cleanroom compatible.

3. Walls/Wall panel systems

   3.1 The wall panel system shall be compatible with the cleanroom class specified and the product requirements, designed clean flush and air tight, and provide moisture barriers as required. All wall panels must have non-shedding finishes which are factory applied whenever possible. Any painted wall surfaces must be painted with two part, water based epoxy. No “flat finish” paint is to be used within any clean area or return chase. Demountable partition systems must be non-progressive. Any/all sealants used on the wall panels must not contain silicone and must be approved by the by M&P Contamination Control Engineering Department (O/7L5S) group prior to use.

   3.2 Return air plenum walls must be made of non-shedding materials which meet local fire codes. In addition, any insulation materials used within the plenum walls must be non-shedding, fire proof and fully contained.

   3.3 Cover strips or seals between panel must be smooth and flush fitting.

   3.4 All internal wall surfaces must meet customer/end user ESD requirements. In the absence of specific requirements, minimum ESD requirements shall be that surfaces must be dissipative with RTG (Resistance To Ground) at < 1010 ohms.

C. Physical Barriers

1. Direct interaction between the cleanroom proper environment and the outside non-controlled environment should be avoided whenever possible. Use of multiple stage designs such as those identified for the specific areas are required, in addition to other controls such as double interlocking door pass-throughs and double interlocking door and window systems, to ensure integrity of differential pressure gradients, prevention of change in laminarity of air flow, and particle migration from direct interaction of adjacent areas.

D. Ceiling System

1. Ceiling system requirements

1.1 Ceiling shall be clean, flush, air-tight and clear of any obstructions and sealed to prevent ingress of air bearing particles, or other contaminants from the ceiling void. Filters, filter frames, filter housings and diffusers mounted in the ceiling must be sealed. Penetration points (e.g. for utility services, sprinklers and lighting) should be kept to the minimum required, and be sealed. Consideration must be given to the location and configuration of components such as lights and sprinklers to avoid disturbance of the intended airflow.

For ISO Class 5 and better cleanrooms, the grid systems should be flush face lighting (as made by Pace, Daw and others) and integrated fire sprinkler systems. The grid shall be planned to allow the maximum number of full 2’ x 4’ or 2’ x 5’ filters and in no case shall any filler panel be wider than 6” or longer than 60”. Any filler panels in these grids must have a seal integrity equal to that of the HEPA/ULPA and with a factory applied non-shedding finish. These requirements do not apply to rework or upgrading existing cleanrooms.

1.2.1 In the event that a Gel sealant grid system is used, Gel sealant must be a two component polyurethane provided by BIOMED. The installation of the gel must be done by, or under the direct supervision of, a BIOMED authorized installer. No dilution or modification of the gel in any way will be allowed. A written: performance, mixing, durometer testing and installation specification must be provided prior to the gel installation. On-site testing of mix proportion and set-up durometer will also be required.

1.3 The ISO Class 6 and 7 rooms may use gasketed HEPA filters on a 2” wide anodized aluminum T-bar ceiling grid. The grid shall be planned to allow the maximum number of full 2’ x 4’ or 2’ x 5’ filters and in no case shall any filler panel be wider than 6” or longer than 60”. Any filler panels in these classes of rooms must be approved for the room class and clipped or sealed in place on the T-bar gasket. Gasket material must be approved by the M&P Contamination Control Engineering Department (O/7L5S) group.

1.4 All non-filter ceiling tiles must be custom cut and shaped, with the addition of collar seals to fit each and every penetration through ceiling tiles to prevent particle penetration into the cleanroom. Ceiling tiles installed shall be cleanroom approved and have sealed edges.

1.5 All non-filter ceiling tiles must be clean, flush and airtight, including T-bar mating surfaces.

Fire sprinkler heads shall be sealed airtight in the ceiling grid and installed without ventilation holes.

Ceiling systems shall be designed to structurally to support full weight of required filters and to withstand the required pressurization. Details of required seismic bracing to be provided, where applicable, must be shown of the design drawings.

15.2.5 Mechanical Requirements

A. All air conveying duct or ceiling plenum systems shall be reinforced to withstand pressurization pressures imposed by the HVAC system.

B. All cleanroom supply or re-circulated air shall be introduced into the cleanroom through the ULPA and HEPA filters by means of central re-circulation fans and/or outside air make-up systems. Self-powered fan/filter units (FFU) may be used in retrofit applications or new construction where it is not feasible to provide a central air handling system or if required to provide flexibility in design change.

1. In the event FFU's are used, structural support (i.e. catwalks, etc.) must be in place to provide access for maintenance/replacement of FFU from supply plenum side when adequate space is available.

2. In the event that the recirculation air supply is subjected to airborne organic/ionic compound introduction (e.g. air which is routed through general areas before returning to cleanroom), filtration for removal of airborne organic compounds (activated carbon or synthetic resin) must be installed. In addition the recirculation air units must be planned to accommodate the future addition of scrubbers for the removal of gaseous and/or ionic contaminants.

C. As required, the make-up air systems are to be equipped with filtration for removal of airborne organic compounds (activated carbon or synthetic resin). In addition the make-up air units must be planned to accommodate the future addition of scrubbers for the removal of gaseous and/or ionic contaminants.

D. The make-up air units should be controlled to take advantage of outside, cool fresh air whenever atmospheric conditions allow.

E. For positive pressure plenum designs, the main re-circulation fans must be equipped with variable frequency drives and/or variable pitch fans. FFU units must have individual variable speed controllers as part of each FFU

1. Variable controls should be capable of allowing operation at approximately 15-20 fpm average room velocity during non-occupied times, for energy conservation. This requirement may be waived for cleanrooms which are expected to operate 24 hours per day, seven days per week.

2. Any FFU units must be equipped with independent and individual monitoring feedback systems which detects fan RPM, including no power supply/power off status, and send information to centralized control and operations panel.

F. All air handlers must be located such that they are conveniently accessible for easy and safe Preventive Maintenance (PM) and repairs.

G. All air duct or ceiling plenum systems shall be designed, finished and sealed to prohibit moisture transmission into the cleanroom.

1. Any/all sealants used on ducting must not contain silicone and must be approved by the M&P Contamination Control Engineering Department (O/7L5S) group prior to use.

H. Provide pressure differential gauges and CFM indicating equipment for HVAC systems, and Photohelic gauges to indicate pressure drop across all filters in the HVAC

I. All ducting interiors shall be cleaned to visibly clean level before installation and maintained clean throughout assembly. This includes residual oils which may be present initially due to corrosion control or manufacturing process in HVAC ducting and plenums. All ducting will be cleaned and delivered to the job site with ends capped and wrapped in plastic. End caps and plastic shall not be removed until the last possible moment before installation.

J. All materials and finishes of surfaces which will come in contact with the air supplied to the interior of the cleanroom must be critically assessed and approved by M&P Contamination Control Engineering Department (O/7L5S) group prior to installation to minimize contamination loading impact on pre and final filters.

K. Gasket or Gel seal system is acceptable for HEPA filters. ULPA filters should be gel sealed, however, gasket systems capable of providing equivalent sealing integrity may be used as secondary alternate. The gel seal material cannot be silicone or hydrocarbon based and must be approved by M&P Contamination Control Engineering Department (O/7L5S) group.

L. HEPA and ULPA (both for stand alone and FFU's) filters shall be delivered to job site in separate, sealed, Silicon free polyethylene bags. Filters shall be packed in cushioned, heavy cardboard protective cartons. Each filter shall be labeled with model number, size, test media/method and efficiency.

M. Contractor shall receive, unload, and inspect the filters in the presence of a M&P Contamination Control Engineering Department (O/7L5S) representative.

N. Outside makeup air shall have a minimum of 35% ASHRAE pre-filtration, followed by 95% ASHRAE filtration prior to reaching HEPA/ULPA filters. Recirculating air shall be routed through 95% ASHRAE filtration prior to reaching HEPA/ULPA filters. Outside air intakes must be located so that they do not ingest contaminated air from exhaust fans or other continuous sources. All pre-filters must be installed in housings which allow easy maintenance access for filter changing without shutting down the cleanroom.

O. Cleanroom noise levels (without process equipment running) shall not exceed 65dB.

P. Individual control dampers shall be installed at each branch in supply ducting system. Back flow dampers must be installed at the outlet of all re-circulation fans which discharge into a common pressure plenum ceiling.

Q. Under no circumstances will any air return/exhaust pathways be allowed above the floor plane for ISO Class 5 cleanrooms or better (i.e. Class 5 or better cleanrooms require raised flooring, with any return/exhaust located below raised flooring).

1. There shall be no more than 25 feet (~7.58 meters) distance between one floor level, side wall return and the next, when used above the flooring

R. All air conveying duct or ceiling plenum systems shall be designed, finished and sealed to prohibit moisture transmission into the clean room.

S. Cleanroom vibration level requirements shall be provided by the using organization.

T. Provide pressure differential gauges/magnehelic gauges to indicate pressure differentials between all controlled environments, including between controlled environment and ambient, as well as between controlled environments.

Q. If hazardous materials are to be used, perform calculations to ensure that airborne concentrations will not exceed OSHA permissible exposure limits. These calculations shall consider the rate of contaminant generation, the room volume, and the make-up air flows.

R. Fire sprinkler heads shall be sealed airtight in the ceiling grid and installed without ventilation holes

15.3 AUTOMATIC PARTICLE COUNTER IF USER REQUIRES

A. Design the installation of a built-in automatic particle counter monitoring device with the capability of transmitting the data to data management system operated by LMSSC Materials & Process Control organization, as required.

B. The system must be capable of monitoring particles in the size range of 0.1 microns and greater on a continuous basis.

C. System to have RS-232 or 4-20 MV output.

D. Location of sensor(s) will be reviewed by LMSSC Materials & Process Control organization.

15.4 SPECIAL CLEANLINESS AREA FOR ISO CLASS 8.5 (Fed-Std-209 Class 300000) CLEANROOM

LMSSC special cleanliness area is where special attention is given to housekeeping cleanliness and orderliness to eliminate visible dirt and particle contamination from parts and assemblies.

15.4.1 Design Criteria For Class 300,000

A. Air filtration

Specify 25-35% efficiency pre-filters on make-up air supply.

Specify HEPA final filters, 95% efficiency, downstream of 25-35% efficiency pre-filters and fans at fan discharge.

B.	Temperature	73 degree +/-5 degree F (unless otherwise specified)
C.	Humidity	20-60% RH
D.	Room pressure	positive
E.	Room air changes	5-10 per hour

15.4.2 Layout

A. Provide layout of the special cleanliness area indicating material vs. people flow patterns.

B. Provide detail of smock room.

C. Entryway/Smock Room to provide:

Shoe brush (with vacuum and HEPA filtered exhaust or ducted to central vacuum system)
Bench – stainless steel
House vacuum outlet
Garment storage (separate cleanroom garments and street clothes)
Janitor supply cabinet including sink with DI water supply and drain

15.4.3 Architectural Requirements

A. All wall surfaces shall be designed clean, flush, air-tight, and clear of any obstructions.

B. The wall finish materials shall be low particulate generating.

C. Pass-through shall be installed with the interior door flush with the wall.

D. The interior room surfaces shall be designed to minimize accumulation of dirt.

E. All openings in dry wall shall be sealed to prevent particulate release.

F. Provide air locks and air seals to allow pressurization of the special cleanliness area.

15.4.4 Mechanical Requirements

A. All air conveying duct or ceiling plenum systems shall be reinforced to withstand pressurization pressures imposed by the HVAC system.

B. Noise levels (without process equipment) shall not exceed NC 70.

C. Design the special cleanliness area to be pressurized positive above ambient building pressure.

D. Provide pressure differential gauge and CFM indicating equipment in HVAC systems and exhaust hoods. Provide magnehelic gauges or equivalent pressure differential instruments to indicate pressure drop across all filters in the HVAC system

E. Provide magnehelic gauges or equivalent pressure differential instruments to indicate pressure at/between each entrance into a cleanroom/clean zone.

F. Air returns shall be located to provide maximum distance from incoming filtered air.

15.5 Clean-Build Construction Philosophy

LMSSC employs a Clean-Build approach to all cleanroom construction. The following are general guidelines

A. Tasks which are the greater source of contamination are scheduled before those which are a lesser source of contamination where possible

B. During construction, measures should be taken to ensure that the contamination generated in the course of assembly and construction work is contained and removed, so as to limit undue contamination of surrounding areas. Appropriate means of containment may include the use of temporary screens and walls, and pressurization of critical zones, with provisional use of temporary “sacrificial” filters in the air handling system(s). Such filters, installed to protect clean volumes (clean environment and air-handling systems) from outside contaminants, and to permit their initial pressurization and operation, are intended to be removed and replaced by filters of appropriate grade at the agreed stage or stages of start-up, before construction approval and subsequent operational use of the installation.

C. Continual or frequent cleaning should be planned, undertaken and controlled as specified (see Section E), preventing undue build-up of contaminants in any part of the installation, and so facilitating the essential final cleaning before start-up.

D. Cleaning of components, and those preparation or assembly tasks which is not absolutely necessary to perform as part of the definitive construction in situ, shall be

done in a separate or intermediate zone between the point of reception on-site, and the final point of construction.

E. LMSSC will enforce a 3 stage Clean-Build process to ensure highest integrity of final cleanroom facility received.

Stage1: Cleanroom Rules

Start of Stage 1: Construction Phase; Rough-in

Work to be Conducted in Stage 1

1. All rough construction within the building skin in the cleanroom area
2. Rough electrical
3. Structural steel work
4. Rough plumbing and HVAC piping including insulation
5. Preparation and painting of surfaces to be painted
6. Preliminary clean of building interior
7. Close in building shell from exterior
8. All rough ducting
9. Temporary wall enclosures

Stage 1 Protocol Requirements

1. Establish a staging area for all materials, equipment, tools, etc. entering the cleanroom area
2. Personnel gowning preparation requirements:
   a. No special garments require for Stage 1
3. All tools and equipment shall be cleaned (free of gross dust, dirt, and grease)
4. No food, drink, chewing gum, tobacco products, or any other items of this nature will be permitted anywhere in the building area or on the person
5. Trash will be placed in provided containers
6. All spills and messes will be cleaned up immediately
7. No gasoline or diesel powered equipment allowed
8. No more than one day's supply of material shall be stored in the area
9. Tacky mats at entry areas
10. Cleanroom surfaces, including walls, ceiling and floors shall not be touched except with gloved hands and only when required

Cleaning Requirements

1. Stage 1 cleaning is to be performed routinely during the course of construction as a preliminary preparation for a clean environment
2. All trash and debris are to be removed daily. Customer approved plastic trash containers or plastic bags are satisfactory containers at this stage.
3. Floors are to be cleaned at the end of each shift. Construction vacuums, brooms and dust mops will be utilized for this purpose at this stage

Stage 2 Cleanroom Rules

Start of Stage 2: After the building shell is separated from the surrounding areas, and substantial completion of rough-in work is complete. In addition, a staging area is erected and controlled access to the cleanroom is established.

Work to be Conducted in Stage 2

1. Set AHU's
2. Set MUA's
3. Make-up air ducting work
4. Sprinkler piping
5. Finish electrical work
6. Controls work
7. Process piping, finish HVAC piping coil connections, etc.
8. Ceiling grid
9. Cleanroom walls
10. Floor preparation and epoxy coating (where applicable)
11. Cleanroom raised floor system

NOTE: Any epoxy flooring must be completed prior to raised floor installation

Stage 2 Protocol Requirements

1. All materials, tools and equipment must enter through the staging area provided. These materials, tools and equipment must be cleaned and wiped down to remove any dirt or particulate matter.
2. All work concerning sawing, drilling, use of abrasives, welding, painting, adhesives, fuels or solvents, or any other activity generating particles, dust, grit, fibers, vapors, fumes, smoke, etc., must be done outside the clean area and re-cleaned prior to reentry to the cleanroom area.
    a. It is inherent that some of the work of the above nature will be required in the clean environment. When it is believed that that this will be the case, the Cleanroom supervisor should be contacted for approval/rejection of the specific request. If the work request is rejected, the work must be removed from the cleanroom area or other means must be found to accomplish the task. If approved, workers may generally be asked to use hand tools and tools with relatively low speeds. This will, in general, produce larger particles that are easier to collect. A HEPA filtered vacuum will be required to be used to collect shavings while sawing, cutting or drilling in the cleanroom.
3. No LP, natural gas, gasoline or diesel powered equipment allowed.
4. Air tools and their use are prohibited in the cleanroom area
5. Brooms or similar sweeping type cleaning tools shall not be allowed. Only HEPA filtered vacuum cleaners may be used.
6. Personnel gowning requirements:
    a. Special garments required: gloves, hair net, beard cover, smock/frock, booties
    b. Shoe cleaners at entrance with tacky mats
    c. Booties will be required after installation of epoxy floor covering.
    d. Construction boots should be clean and free from contamination, grease, oil, etc.
    e. Personnel may be required to change shoes or clothing if it is a source of gross contamination (dirt, oil, lint). The cleanroom supervisor will have final judgment in this matter.
7. No food, drink, chewing gum, tobacco products, or any other items of this nature will be permitted anywhere in the building area or on the person
8. Maintain a clean working area at all times, with the utmost care taken to keep the area neat and clean
9. Cleanroom surfaces, including walls, ceilings, and floors shall not be touched except with gloved hands and then only when required

Cleaning Requirements

1. All material and equipment packing will be removed prior to entering into the area. No marking with chalk lines or permanent markers will be allowed.
2. All trash and debris shall not be allowed to fall on the floor
3. All trash and excess materials will be removed from the area daily
4. Cleanroom materials must be kept in the designated, segregated storage area
5. All dust or any debris will be removed by vacuuming on a daily basis at he end of each shift

6. Trash and debris shall be kept in a closed container and removed at least once per shift
7. Mops, HEPA vacuums and absorbent wipes may be used for clean-up
8. A pre-clean complete wipe down will be conducted at the completion of the Stage 2 section of the work. This will be accomplished with DI water and low lint wipers as approved by the M&P Contamination Control Engineering Department (O/7L5S).

Stage 3 Cleanroom Rules

Start of Stage 3: After the completion and installation of the raised floor assembly and ceiling grid in the cleanroom area

1. Final caulking
2. Final electrical (light fixtures)
3. HVAC blown down
4. Filter installation
5. Final wipe down
6. Balance of HVAC system
7. Certification

<u>Stage 3 Protocol Requirements</u>

1. Only personnel having training consistent with Stage 3 protocol will be allowed to enter the cleanroom area
2. No food, drink, chewing gum, tobacco products, or any other items of this nature will be permitted anywhere in the building area or on the person
3. No wooden boxes, wooden tools, or any other form of wood will be allowed in the cleanroom
4. All spills or messes will be cleaned-up immediately using approved cleanroom materials and cleaning procedures
5. No pencils, felt tip markers, or erasers will be allowed in the cleanroom
6. Filter surfaces/facings shall not be touched under any circumstances
7. Cleanroom surfaces, including walls, ceilings, and floors shall not be touched except with gloved hands and then only when required
8. Any contamination generation work shall; be done only with the approval of the LMSSC cleanroom supervision
9. Any and all items taken into the cleanroom will be done so only with the approval of the LMSSC cleanroom supervision
10. All tools, equipment, and materials will be wiped down and cleaned, then inspected by the cleanroom supervisor prior to entry into the cleanroom
11. All packing materials must be removed prior to entry into the cleanroom. No foam of any kind, shredded or wrapping paper, cardboard or other generating packing materials will be allowed
12. Shoe cleaners and tacky mats will be required at the entrance to the staging area and also at the entrance to the cleanroom
13. No cardboard or non-cleanroom paper is allowed in the cleanroom
14. No chalk lines or markers are allowed in the cleanroom
15. No odor producing substances will be allowed in the cleanroom
16. Personnel who have health conditions (colds, allergies, etc.) are not allowed in the cleanroom
17. No aerosols or spray cans are allowed in the cleanroom
18. Special gowning requirement:
    a. Personnel will be required to wear booties, coveralls, hoods, gloves, and face masks
    b. Workers clothes must be clean and in good condition
    c. Damaged gloves should be replaced immediately using approved changing procedures
    d. Tacky mats will be utilized before entering cleanroom area while in cleanroom garments

e. No personal items will be permitted in the cleanroom
f. Only clearly marked cleanroom entrances may be used to enter and exit the area

Cleaning Requirements

1. Trash and debris shall not be allowed to accumulate or stored in the cleanroom
2. Floors shall be vacuumed with a 99.99% HEPA filtered vacuum cleaner and damped mopped using approved moping materials/solutions at the end of each shift
3. A complete top down cleaning with cleanroom approved materials of all surfaces shall be conducted prior to certification
4. Cleanroom readied for certification

15.6 Test Certification and Verification of Performance

A. All rooms shall be balanced and class certified by an independent third party qualified vendor with a demonstrable expertise in the cleanroom certification field (refer to Section 15.6, tables D1 and E1 for certification summary criteria). Vendor must be qualified and approved, including witnessing and approval of testing methods used by vendor, and/or participating in actual certification testing, by M&P Engineering Contamination Control Engineer and LMSSC Cleanroom Certification personnel. Final acceptances may only be granted by LMSSC Cleanroom Certification personnel

B. All walls, floors, ceiling, air handling equipment, etc., shall be cleaned prior to conducting tests. Floors shall be cleaned as specified by manufacturer. Cleaning shall be performed by approved methods and procedures per area requirements. Special cleaning procedures of specific equipment shall be carried out as directed by the LMSSC Cleanroom Engineer.

C. Three stage certification requirements

1. Testing and certification of the completed project for compliance with requirements as stated in section 7.0 of this document will follow a three stage process: (1) “As-Built”; (2) “At Rest” and (3) “Operational”.

1.1 “As-Built”: A room completed and ready for testing, with air handling and associated equipment cleaned and running. Balancing of filters and HVAC completed.

1.2 “At Rest”: A room with all production equipment installed, but not operating. No personnel, except for test persons in the area.

1.3 “Operational”: A room with production equipment operating, and the normal complement of personnel simulating work conditions.

D. Particle counts shall meet the following limits during testing.

NOTE: Sampling locations, times and statistical calculations are to be per the current revision of ISO 14644-1 (i.e. counts per m^3).

Table D1

Particle Size (microns)	Specification	As-Built	Max count/cf At Rest	Operational
0.1	Class 3	250	500	1,000
0.2		59.25	118.50	237
0.3		25.50	51	102
0.5		8.75	17.50	35
1.0		2	4	8
0.1	Class 4	2,500	5,000	10,000
0.2		592.50	1,185	2,370
0.3		255	510	1,020
0.5		88	176	352
1.0		20.75	41.50	83
0.1	Class 5	25,000	50,000	100,000
0.2		5,925	11,850	23,700
0.3		2550	5100	10,200
0.5		880	1760	3,520
1.0		208	416	832
5.0		7.25	14.50	29
0.1	Class 6	250,0000	500,000	1,000,000
0.2		59,250	118,500	237,000
0.3		25,500	51,000	102,000
0.5		8800	17,600	35,200
1.0		2080	4160	8,320
5.0		73.25	146.50	293
0.5	Class 7	88,000	176,000	352,000
1.0		20,800	41,600	83,200
5.0		732.5	1,465	2,930
0.5	Class 8	880,000	1760,000	3,520,000
1.0		208,000	416,000	832,000
5.0		7,325	14,650	29,300
0.5	Class 9	8,800,000	17,600,000	35,200,000
1.0		2,080,000	4,160,000	8,320,000
5.0		73,250	146,500	293,000

E. Final certification and buy-off testing shall be performed under the following conditions for the following configurations (test listed in required sequential testing order):

Table E1

Test	Facility Status	Requirements
Air Exchange	As-Built	Class dependent (See section 15.2)
Air Flow Parallelism	As-Built	14^0 Off vertical max., @1 meter (~36") above floor
Horizontal deflection	As-Built	45 FPM max., at work level (doors open)
Filter Requirement	As-Built	Class dependent (see Section 15.2)
Velocity	As-Built	Class dependent (see Section 15.2)
Pressurization	As-Built	0.02" WC minimum (between certified environments), 0.05" WC (between certified environments and ambient)
Filter Leak	As-Built	<0.01% of upstream concentration @0.1 microns
Facility induction leak testing	As-Built	<0.01% of upstream concentration @0.1 microns
Lighting Level	As-Built	500 Lux minimum @ 1 meter from floor
Noise Level Test	As-built	65dB or less
Particle count	As-Built/At Rest/Operational	See Table D1
Temperature	Operational	73 degree +/- 5 degree F (unless other-wise specified)
Humidity	Operational	20-50% RH

SECTION 16
BUILDING CONTROLS

16.1 GENERAL

16.1.1 Correlation and Coordination

A. This section provides standards for the Building Controls design work. These design standards shall correlate with the current edition of Lockheed Martin Space Systems (LMSSC) Facility Engineering Standards (FES), Construction Specifications Volumes I through IV, and other relevant sections of this Facility Design Standards. Where applicable, the Engineering Construction Details delineated in the FES Construction Specifications shall be used for compatibility to LMSSC existing facilities design.

B. The Building Controls design work shall be designated under the current Construction Specifications Institute (CSI) format.

C. The design shall be fully coordinated with other related architectural and engineering disciplines to eliminate conflicts and omissions, and to ensure that the total project requirements are met. Prudent judgment must be exercised in collaborating design solutions with LMSSC organizations and personnel.

D. All design/construction drawings shall follow LMSSC drawing procedures and standards, unless specifically described otherwise in specific Sections of this Facility Design Standards. Refer to Section 11, Drawing Procedures for all drawing requirements.

16.1.2 Design Philosophy

A. The design shall be done in a manner to assure that the maximum benefit is obtained for the costs expended. Safety, quality, reliability, and maintainability shall not be compromised as a cost saving measure.

Incorporation of energy-saving and pollution-reducing measures, including pursuit of LEED Silver certification, is encouraged and may be required; consult with LMSSC project manager. Refer to specification section 01 81 13 for specific LEED requirements.

The methods of analysis and design shall follow the established principles of professional engineering practice. Value Engineering is encouraged during the development of the design work.

B. The Building Automation System (BAS) shall be designed as a distributed control system. All devices communicate on a peer-to-peer network which allows them to share networked data with each other without going through a host or master device. All programmable controllers, application specific controllers, data interfaces and gateways must be BACnet capable. Physical network architecture MUST follow the LONMARKS Installation Guidelines.

C. LEED Requirements (if pursued, consult with architect/ LMSSC project manager):

1. LEED Requirements may impact the design of the BAS through implementation of the following credits, among others:

a. EA Prerequisite 1 and EA Credit 3: Commissioning.
b. EA Prerequisite 2 and EA Credit 1: Energy efficiency controls.
c. EA Credit 2: Incorporation of energy generated on-site.
d. EA Credit 5: Ongoing monitoring of energy efficiency.
e. EA Credit 6: Incorporation of off-site renewable energy.
f. EQ Prerequisites 1 & 2 and Credits 1,2,& 5: Ventilation/ outdoor air delivery control.
g. EQ Credit 6: Systems controllability by occupants.
h. EQ Credit 7: Occupant thermal comfort.
i. EQ Credit 8: Incorporation of natural daylight.

16.1.3 Building Automation System Requirements

A. This section lists the specific requirements that must be satisfied by the A/E in the design of Building Automation Systems (BAS) in order to meet LMSSC needs. All design and construction shall be in conformance with LMSSC Facility Engineering Standards as referenced in this document. Deviations or modifications must have prior approval of the LMSSC Controls Engineer.

B. Building control drawings will include, but are not limited to, any or all of the following:

1. Title page of application set
2. Flow diagrams (one per system)
3. Ladder diagrams/communications (one per system)
4. Points list and bill of materials (one per system)
5. Control panel layout (one per system)
6. Applicable details (one per set)
7. Applicable zone diagrams (one per system)
8. Floor plans with device locations, and conduit and wiring routing
9. Roof plans with device locations, and conduit and wiring routing
10. Demolition plan

C. Standard building control drawings will be furnished for the following types of control systems.

1. Constant volume with supply and return fan including economizer cycle.

   a. Single zone heating, cooling, and humidity
   b. Single duct with terminal reheat
   c. Multi-zone two deck with heating and cooling
   d. Multi-zone three deck with heating and cooling

2. Variable volume with supply and return fan including economizer cycle.

   a. Single duct terminal reheat
   b. Single duct fan terminal box with heating and cooling
   c. Double duct double fan with heating and cooling

3. Make up air/exhaust systems

   a. Single zone heating, cooling, and humidity

4. Central plants

   a. Centrifugal chillers - primary, secondary piping

b. Cooling tower
c. Hot water boilers
d. Steam boilers
e. Chemical treatment

5. Package units

a. Heat pumps
b. DX coil units
c. Fan coil
d. Computer room A/C units

D. Building control drawings will also include the following levels of controls

1. Level 0 Conventional controls
2. Level 1 ALC OptiFlex Series

E. CAD files availability and usage

1. Drawings (prints) and AutoCad files are available from LMSSC for each type of control system and level of control listed in Table 1. Drawings and files are to be used by the Design Engineer as a standard reference and modified to accurately reflect job specific control systems. Items to be modified include, but are not limited to the following:

a. Sheet names, drawing titles, project locations, ER #, etc.
b. Control unit names and/or numbers
c. Communication module names and/or numbers
d. Amplifier modules name and/or numbers
e. Cable names and/or numbers
f. Sensor names and/or numbers
g. Actuator names and/or numbers
h. Materials/points list and bill of materials

In general, items to be modified are indicated by an "X" in a unit's identification mark or title. Acceptable manufacturers and model numbers of sensors, actuators, devices and controllers are listed in Table 2.

2. Files are to be generated and modified in AutoCad Version 10.0, and conform to Section 11, Drawing Procedures, of these Design Standards.

Text styles and line types used on the drawings (and therefore needed to accurately modify them) are as follows:

TEXT NAME	TEXT FONT	LINE TYPES
Standard	TXT	Continuous
		Dashed
		Hidden
		Center
		Phantom

All drawings are done in full scale except the panel layout sheet which is 1 inch = 4 inch scale. All drawings are for a sheet size of 34 inch x 44 inch

3. The file name nomenclature used to name AutoCad sub-files is as follows:

```
                                   CV - SZ - LO - CS
                                    |    |    |    |
GENERAL SYSTEM- - - - - - - - - -   |    |    |    |
SPECIFIC SYSTEM - - -- - - - - -- - - - - - -|    |    |
LEVEL OF CONTROL- - - -- - - - - -- - - - - - - -|    |
SHEET NAME - - - - - - - - - - - - - - - - - - - - - - - -         |
```

a. GENERAL SYSTEM TYPE

CV = CONSTANT VOLUME
VV = VARIABLE VOLUME
MU = MAKE-UP AIR/EXHAUST
PU = PACKAGED UNITS

b. SPECIFIC SYSTEM TYPE

SZ = SINGLE ZONE
RH = SINGLE DUCT W/REHEAT
M2 = MULTI ZONE, 2 DECK
M3 = MULTI ZONE, 3 DECK
SF = SINGLE DUCT FAN TERMINAL
DD = DOUBLE DUCT - DOUBLE FAN
PL = ANY TYPE OF CONTROLLED PLANT
HP = HEAT PUMP
DX = DX COIL UNIT
FC = FAN COIL UNIT
CR = COMPUTER ROOM A/C UNIT

c. LEVEL OF CONTROL

L0 = LEVEL 0 CONVENTIONAL
L1 = LEVEL 1 ALC OptiFlex SERIES

d. SHEET NAME

CS = COVER SHEET
FD = SYSTEM FLOW DIAGRAM
ZF = ZONE FLOW DIAGRAM
LD = SYSTEM LADDER DIAGRAM
ZL = ZONE LADDER DIAGRAM
BM = BILL OF MATERIALS
PL = PANEL LAYOUT
DS = DETAIL SHEET
ZC = ZONE CONTROL

Files names for each system type and level of control are listed in Table 1, Filenames Table.

16.1.4 Building Automation Equipment Requirements

A. Submittals

1. Manufacturers data

The manufacturers' data shall include the following:

Sensor devices (each type) including complete wiring and connection diagrams.

Control devices (each type) including complete wiring and connection diagrams.

B. Acceptable Controls

1. The controls must be part of a stand-alone system: air conditioning unit, heat pump, etc. The controls must be manufactured through the same company as the stand-alone system.

C. System requirements

1. Standard products shall be provided as part of a total system.

2. The controls must be able to communicate with or be monitored by LMSSC BACnet based building automation network.

3. Materials and methods of construction shall be compatible with the media being measured and controlled, the surrounding environment, and system specifications.

D. Overview

1. Provide a complete operating system consisting of a DDC control system that is fully integrated into the stand-alone unit.

2. Provide control systems consisting of thermostats, control valves, operators, indicating devices, interface equipment, and all apparatus to operate the mechanical systems and to perform functions specified.

3. Provide materials, coordination, and field work to connect and interface the BAS components supplied by others as part of an "equipment package" unless specified otherwise. Valves provided as part of the "equipment package" are not installed under this section.

4. Provide fully proportional, integral, and derivative capabilities unless specified otherwise.

5. Provide power line surge protection devices, to protect against overvoltage transients on all sensitive control devices provided under this contract.

6. The Controls Contractor shall provide all coordination to assure that the system, as installed, is totally compatible with devices provided by others. If additional devices are required to provide compatibility, these devices shall be provided by the Controls Contractor at no additional cost to LMSSC.

7. The Controls Contractor shall modify existing or provide new graphics for the building automation graphical user interface.

8. The Controls Contractor shall add bindings for any new equipment to current building automation communication infrastructure.

E. Transmitters and sensors

1. Temperature sensing elements

Provide sensing elements for temperature devices of the averaging type for air stream control, rigid bulb for liquids. Provide 20 ft. length averaging-type elements in all air streams exceeding 36 sq. ft. of free area. Provide stainless steel instrument mounting flanges at ducts and separable wells for liquids. Averaging elements shall be located in a manner that traverses the air stream. Element shall be supported in a manner that prevents vibration and chafing, and access shall be provided to facilitate replacement. Provide a seal for access panels and duct flanges that are consistent with duct sealing requirements for this project. All sensing elements shall meet an accuracy tolerance of ±0.1% over an operating range of -50°F to +250°F, unless specified otherwise. Chilled water temperature measurements shall have an accuracy tolerance of ±0.075%.

2. Temperature sensors/transmitters

a. Provide linear precision resistance elements for specific applications.

b. Transmitters shall be provided for these specific applications and have an accuracy of ±0.25° F.

3. Electronic humidity sensors/transmitters

a. Measuring Range: 0 to 100% RH

b. Accuracy at 20° C: +2% RH in Range 0 to 80% RH, +3% RH in Range 80 to 100% RH

c. Temperature dependence of electronics: +0.06% RH/C degrees between -5 to 55° C

d. Response time: 5 seconds typical (90% response)

Sensor/transmitter shall be Invensys or manufactured by the same company as the actual unit.

4. Dew point transmitters

Provide dew point transmitters where indicated on the control drawings. Transmitters shall measure dew point by the chilled mirror principle.

5. Static pressure transmitter and probe (medium performance)

a. The static pressure transmitter shall have a strain gauge transducer, internal signal conditioning circuitry, and 4 to 20 mA DC final output comparable to Series 600 differential pressure transmitter as manufactured by the selected transmitter manufacturer.

b. The adjustable range shall be determined by the duty specified on the control drawings.

6. Indicating pressure transmitters

Provide electronic pressure transmitters for the services shown on the control drawings. Calibrated range shall be approximately twice the normal operating pressure. Transmitter shall have a 1 to 5 VDC ungrounded output signal.

7. Duct air flow and static pressure-sensing stations and transmitters (high performance)

   a. Static pressure station

      The static pressure-sensing station shall have an integral air straightener, multiple static pressures sensors, and averaging manifold. The sensor arrangement shall perform an equal area transverse of the duct cross section. Maximum resistance to air flow shall not exceed 0.075 in. wc at 200 fpm velocity with a 1% accuracy.

   b. Static pressure transmitter

      The static pressure transmitter shall have a span of 0 in. to 1.0 in. wc to 0 in. to 5.0 in. wc field adjustable, +0.25 in. span accuracy, and provide a final 4 to 20 MADC isolated output. Provide damping for this loop.

   c. Duct air flow measuring station

      Air flow measuring stations shall be (a combination of air equalizer and straightener) multiple pilot tube equal area traversing, and symmetrical averaging construction. Resistance to air flow shall not exceed 0.15 in. wc at 2,000 CFM velocity. This station shall have an accuracy of within 1% of actual flow.

   d. Duct air flow and building static pressure transmitter

      Transmitters shall be calibrated to match the differential pressure produced by the air flow measuring station or building static pressure requirement with an accuracy of ±0.25% of span. Provide a final 4 to 20 MADC isolated output. Provide damping for this loop.

   e. Items a. through d. above shall be provided by the same manufacturer.

8. Compound low range differential pressure transmitter:

   Provide low range transmitters for differential pressure measurement as indicated on the control drawings. Provide a calibrated range of ±0.1 in. wc with 4 to 20 MADC output. Manufacturer shall be Air Monitor, Brandt, or Tek-Air.

F. Receiver controller

   1. Provide single or dual input models as required to meet the sequence of operation.

   2. Provide mechanical set point (integral) and proportional band adjustment.

G. Controlled devices

   1. Actuators

      a. Damper actuators

1. Provide fully digitally controlled damper actuators. Spring ranges and number of actuators shall meet the requirements of each particular application. Actuator bodies shall be of metal construction. The open position of the damper will be clearly marked on the actuator position scale.

2. Damper actuators shall be installed outside of the ductwork and connected to an extended shaft. Damper actuators for inlet vane dampers, unless otherwise shown on the control drawings, shall be floor mounted by attaching an angle frame. Damper actuators may use a mechanical arm linkage if the torque on the dampers is high enough to require it.

3. Damper actuators shall be of the spring return type, and shall return to the predetermined position indicated on the control drawings upon loss of power. Damper actuators used on smoke or isolation damper service shall have their closing stroke retarded by an adjustable restrictor in their exhaust to the atmosphere.

b. Valve actuators

1. Field mounted actuators for any valve exceeding 2-1/2 in. are not acceptable.

2. Actuators shall be of the spring return type, and shall return to the predetermined position indicated on the control drawing upon loss of power.

2. Valves

a. Provide valves in accordance with the general valve specifications. Body style, materials, and pressure ratings shall be as specified elsewhere in the LMSSC Standards. Provide position indicators on all valves. Provide pilot positioners on modulating valves 1-1/2 in. and larger, or where indicated on the control drawings. Valves 2 in. and smaller shall be of a configuration utilizing screwed ends. Flare ends are not acceptable. Where valve operator design does not allow for mechanical position indicator, provide integral air pressure gauge in the branch line. Redline spring range on the gauge face.

b. Select valves to fail in an open or closed position as dictated by freeze, humidity, fire, temperature protection, or as indicated.

c. All valves shall be equipped with synthetic rubber diaphragm or piston motor operators of sufficient size to ensure smooth positive operation over the operating range without chatter and slamming and give tight shut-off at either end position against the system pressure.

d. Provide a field-adjustable device for controlling speed of valve movement on all 2-position type actuators.

e. All valves will be powered by 24V. Under no circumstance shall the installed valves be powered by greater than 110V.

3. Steam valves and water valves 2-way

a. Steam valves shall have modified linear or equal percentage flow characteristics, composition disc to 25 psi and metal-to-metal inner valve construction to 100 psi with renewable stainless steel seat rings and stainless steel trim. Water valves shall have equal percentage flow characteristics, composition disc with renewable brass or bronze seats, and stainless steel rim. Valves shall be equipped with a synthetic rubber diaphragm or piston motor operator of sufficient size to ensure tight seating against the working pressure.

b. Valves 2 in. and smaller shall have bronze bodies cast in accordance with Specification ASTM B 61-60 with screwed ends. Valves 2-1/2 in. and larger shall have cast iron bodies with flanged ends.

c. Provide separate steam valves on individual coils. Capacities for 2 valves in parallel shall have 1/3 - 2/3 load capacities sequenced so that the smaller valve opens first. Size low pressure valves for approximately 10 psi inlet pressure and 5 psi drop.

d. Provide a Fisher Control Design 100 V-ball control valve sized to meet the load conditions.

   Furnish with a (stainless) (carbon) steel valve body, 316 S.S. ball seal, 317 S.S. chrome-plated ball, Fisher 1052 K Series Operator, and Fisher 3610 J Valve positioner.

4. Water valves 3-way

a. All hot and cold water 3-way valves shall have composition disc seating, with linear flow characteristics and stainless steel or bronze trim.

b. Valves 2 in. and smaller shall have iron bodies with screwed ends. Valves 2-1/2 in. and larger shall have iron bodies with flanged ends.

c. Three-way valves shall have sufficient stuffing box protection to ensure against leakage at the operating pressure without causing sticking or binding of the valve stem. Packing shall be Teflon, Teflon-asbestos, or U-cup design for service involving temperatures less than 240° F. Size for nominal 5 psi drop, 8 psi maximum.

5. Butterfly valves

a. Butterfly control valves shall have actuators provided and factory mounted by the valve manufacturer in a FO or FC configuration as applicable. Each control valve shall be factory adjusted and tested for bubble-tight shutoff. Field-mounted butterfly valve actuators are not acceptable.

b. Provide valve position indicators on all butterfly valves.

c. Three-way butterfly valves are not acceptable. Provide 2-way butterfly valves in a FO or FC configuration incorporating pilot positions. Positioners shall give the valves a linear flow characteristic.

d. Provide a field-adjustable device for controlling speed of valve movement on all 2-position type actuators.

6. Automatic dampers

Automatic control dampers will be provided under LMSSC Standards.

7. Indicating dial thermometers for air stream service

Provide 4 in. dial indicating thermometers for each air stream service as shown on the control drawings. Thermometers shall be liquid filled and have sufficient averaging bulb length to span the duct being measured. Select temperature range for maximum accuracy and readability of measurement being made. Provide all mounting accessories.

8. Extension brackets

Damper operators, control devices, thermometers, and gauges shall be mounted upon extension brackets or devices to prevent interference with insulation or vapor barrier integrity.

9. Humidifiers

a. All humidifiers must be programmed with the following parameters:

1. Standby Time Before Drainage: 168 hrs

2. Internal Service Setpoint: 32,000 lbs

3. Heater Cycle Time: 2 sec

4. Standby Tank Temperature: 180F

5. Controller Idle Time: 5 sec

6. Setup Password: 0

b. LMSSC will accept humidifiers that are manufactured by Dri-Steem, Inc. Humidifiers from all other manufacturers must be pre-approved by the LMSSC prior to ordering.

10. Variable Frequency Drives

a. LMSSC will only accept VFDs that feature Hand/OFF/Auto functionality.

b. All variable frequency drives must be programmed with the following parameters:

1. Minimum Frequency Output: 20 Hz

2. Minimum Voltage: 224 V

3. Minimum Ramp Up Time: 60 sec

4. Minimum Ramp Down Time: 60 sec

H. Control panels

1. Control panels shall be provided to mount the instrumentation specified or indicated for each system. Panels shall be centrally located near the controlled components of the system or as indicated. Control panels shall be fabricated from at least 14 gauge steel with welded corners and hinged doors. All temperature controllers, static pressure controllers, pressure controllers, gradual-switches, timers, relays, remote reading dial thermometers, air gauges for the indication of main air and controller air pressure, and any other miscellaneous devices associated with the system shall be mounted in this panel. Internal metal sub-plates shall be provided for instrument mounting. Penetrations of exterior shell for other than air circulation louvers, electrical conduit, and bulkhead fittings are not permitted.

2. Each regulator, switch, thermometer, or gauge in or on the control panels, shall be identified by a nameplate of white acrylic or phenolic engraving stock with engraved black lettering. Identification shall be specifically related to a control diagram which shall be mounted adjacent to, or in the system control panel.

3. All control system and power wiring shall be stranded and meet NEC requirements. All terminations within panels shall be to terminal strips. Wire nuts or similar devices are not permitted within panels. Provide a fused tubular incandescent light fixture and switch within each local control panel. Depending on panel size and assembled configuration, additional internal lighting may be required. Provide 20% spare electrical terminals and 20% spare usable space. All field wiring associated with the control circuit shall be brought back to the panel terminal block for ease of troubleshooting.

4. With the exception of terminal strips specified elsewhere, control devices with exposed electrical terminals are not permitted where used in other than low voltage applications.

5. Provide permanently mounted pressure gauges on outputs from all controls. Provide panel-mounted bases for gauges if gauge is not an integral part of controller.

6. All control cabinets shall be provided with a key lock. All cabinets provided for a project shall utilize a single master key.

7. Control panel wiring and FR tubing shall be routed within separate plastic wire ducts with slotted sides and snap-on plastic covers.

8. Provide a wire tagging system by use of sequential numbers at all terminations, numbers shall be prefixed by an identifier describing the originating mechanical system (Example: AH 1-1: First wire originating in Air Handler No. 1).

9. The main circuit breaker feeding the control panel must be clearly labeled on or in the panel.

10. Wiring methods for single conductors

    a. Number of wires under a single screw or pressure terminal shall not exceed 2.

b. Same physical conductor shall have the same tag identification throughout the circuit.

c. Panel terminal strip shall be tagged with the same number as the attached wire.

d. Shop drawings shall reflect this method and numbering system.

e. Provide 5% spare wires in all conduit runs but not less than 1 spare wire.

I. Alarms

Provide alarm points complete with all equipment necessary for remote signaling to computerized management system.

J. Switches

1. Damper limit switch

Provide Allen Bradley Bulletin 802T with lever arm and roller assembly or Square D. Note: See LMSSC Standards for smoke, and combination fire/smoke damper limit switches.

2. Low range differential pressure switches for air service

Provide Dwyer Instrument Company Model 1823 Series. Select range to be compatible with the differential pressure being measured. Provide mounting bracket and all accessories.

K. Thermostat/sensor locations

Check and verify location of thermostats and other exposed control sensors with plans and room details before installation. Locate room thermostats and room transmitters 60 in. above floor.

L. Enclosure

Enclosures for control devices shall be suitable for the environmental conditions in which they are located, e.g., waterproof, dust proof, explosion proof.

M. Water flow elements and transmitters

Provide water flow elements as manufactured by Dietrich Standard Corporation for all water measurements. Provide a Rosemount Model No. 1151 differential pressure transmitter ranged to match the flow element. Include Option A-3 (3-valve manifold). Furnish certified flow calculations.

N. Control power sources

1. Existing control transformers

a. The Contractor shall coordinate the use of existing and new motor starter control transformers and other power supplies with the load requirements of the associated control devices.

b. Where the connection of a control device to a starter control transformer or other power supply would load the transformer to 80% or more of its capacity, the Contractor shall provide a separate and adequate control power source.

c. The Contractor shall be responsible for primary and secondary over current protection, conductors, connectors, transformers, raceway and associated appurtenances including auxiliary relays and contacts, control power safety disconnects, and placards warning of foreign control voltage sources.

16.1.5 Standard Acronyms

LMSSC - HVAC systems control standards

A. Air handling systems acronyms

	FUNCTION	DESCRIPTION	ACRONYMS
1.	AIR HANDLER SUPPLY FAN START/STOP	SUP FAN S/S	XXXAHXXSFSS
2.	A.C. UNIT START/STOP	SUP FAN S/S	XXXACXXSFSS
3.	FAN HOUSE SUPPLY FAN START/STOP	SUP FAN S/S	XXXFHXXSFSS
4.	AIR HANDLER RETURN FAN START/STOP	RET FAN S/S	XXXRFXXSS
5.	EXHAUST FAN START/STOP	EX. FAN S/S	XXXEFXXSS
6.	MAKE UP FAN START/STOP	M.U. FAN S/S	XXXMAUXXSS
7.	FAN HOUSE STATUS	SUP FAN STATUS	XXXXFHXXSFS
8.	AIR HANDLER SUPPLY FAN STATUS	SUP FAN STATUS	XXXSFXXS
9.	FILTER	AH FILTER	XXXAHXXFIL
10.	A.H. RETURN FAN STATUS	RET FAN STATUS	XXXRFXXS
11.	A.C. UNIT STATUS	SUP FAN STATUS	XXXACXXS
12.	A.H. SUPPLY AIR TEMP	SUP AIR TEMP	XXXAHXXSAT
13.	A.H. RETURN AIR TEMP	RET AIR TEMP	XXXAHXXRAT
14.	SUPPLY AIR RELATIVE HUMIDITY	SUP AIR REL HUM	XXXAHXSAH
15.	A.H. OUTSIDE AIR TEMP	O.A. TEMP	XXXAHXXOAT
16.	OUTSIDE AIR RELATIVE HUMIDITY	O.A. REL HUM	XXXAHXXOAH

17.	A.H. ECONOMIZER	ECON	XXXAHXXECON
	A.C. UNIT ECONOMIZER	ECON	XXXACXXECON
	FAN HOUSE ECONOMIZER	ECON	XXXFHXXECON
18.	AIR HANDLER OUTSIDE AIR DAMPER POSITION	O.A.D. POSITION	XXXAHXXOADP
19.	AIR HANDLER DUCT STATIC PRESSURE	STATIC PRESS.	XXAHXXSTPR
20.	FUME SCRUBBER	STR/STO	XXXFSXXSS
21.	BOOSTER FAN	BF START/STOP	XXXBFXXSS
	FUNCTION	**DESCRIPTION**	**ACRONYMS**
22.	AIR HANDLER SMOKE ALARM	SMK ALM	XXXAHXXSMK
	A.C. UNIT SMOKE ALARM	SMK ALM	XXXACXXSMK
	FAN HOUSE SMOKE ALARM	SMK ALM	XXXFHXXSMK
23.	AIR HANDLER HOT DECK TEMP	HD TEMP	XXXAHXXHDT
	FAN HOUSE HOT DECK TEMP	HD TEMP	XXXFHXXHDT
24.	AIR HANDLER HOT DECK STATIC	HD STATIC	XXXAHXXHDSP
	FAN HOUSE HOT DECK STATIC	HD STATIC	XXXFHXXHDSP
25.	AIR HANDLER COLD DECK TEMP	CD TEMP	XXXAHXXCDT
	FAN HOUSE COLD DECK TEMP	CD TEMP	XXXFHXXCDT
26.	AIR HANDLER COLD DECK STATIC	CD STATIC	XXXAHXXCDSP
	FAN HOUSE COLD DECK STATIC	CD STATIC	XXXFHXXCDSP

B. Terminal units and zone acronyms

1.	VAV BOX	SMTTUXX	XXXAHXXVAV
2.	CV BOX	SMITUXX	XXXAHXXCV
3.	FAN COIL	SMTFCXX	XXXFCXXXX
	FUNCTION	**DESCRIPTION**	**ACRONYMS**
4.	HEAT PUMP	SMTHPXX	XXXHPXX
5.	RE-HEAT (HOT WATER)	RE-HEAT TEMP	XXXAHXXRHXXT
6.	RE-HEAT (ELECT)	RE-HEAT TEMP	XXXAHXXRHXXT
7.	ZONE TEMPERATURE	ZONEXXTEMP	XXXAHXXZXXT
8.	ZONE HUMIDITY	ZONEXXHUMIDITY	XXXAHXXZXXH

C. Central plant system acronyms

1.	CHILLER ENABLE	CHX ENABL	XXXCHXXENAB

2.	CHILLER SUP. TEMP	CHX SUP. TEMP	XXXCHXXCHWST
3.	CHILLER RET. TEMP	CHX RET. TEMP	XXXCHXXCHWRT
4.	PRIMARY CHILLED WATER SUPPLY TEMP	PRICWSTEMP	XXXPCHWST
5.	PRIMARY CHILLED WATER RETURN TEMP	PRICWRTEMP	XXXPCHWRT
6.	PRIMARY CHILLED WATER FLOW	PRI C.W. FLOW	XXXPCHWFL
7.	PRIMARY CHILLED WATER	PCW DIFFPRESS	XXXPCHWDP
	FUNCTION	**DESCRIPTION**	**ACRONYMS**
8.	SECONDARY CHILLED WATER DIFFERENTIAL PRESSURE	PCW DIFFPRESS	XXXPCHWDP
9.	CW PRIMARY PUMP S/S	CW PRI PUMP S/S	XXXPCHWPXXSS
10.	CW PRIMARY PUMP STATUS	CW PRI PUMP	XXXPCHWPXXS
11.	CW SECONDARY PUMP START/STOP	CW SEC PUMP S/S	XXXSCHWPXXSS
12.	CW SECONDARY PUMP STATUS	CW SEC STATUS	XXXSCHWPXXS
13.	CW BOOSTER PUMP START/STOP	CW BOOST PUMP S/S	XXXCHWBPXXSS
14.	CW BOOSTER PUMP STATUS	CW BOOST PUMP	XXXCHWBPXXS
15.	COOLING TOWER PUMP START/STOP	CTW PUMP S/S	XXXCTPXXSS
16.	COOLING TOWER PUMP STATUS	CTW PUMP	XXXCTPXXS
17.	COOLING TOWER BYPASS VALVE	TWR BYPASS VLV	XXXCTVSS
18.	COOLING TOWER WATER SUPPLY TEMPERATURE	CTWS TEMP	XXXCTST
19.	COOLING TOWER WATER RETURN TEMPERATURE	CTWR TEMP	XXXCTRT
20.	COOLING TOWER WATER FLOW	CTW FLOW	XXXCTFLOW
21.	COOLING TOWER FAN STATUS	CT FAN HI	XXXCTXHIS
22.	COOLING TOWER FAN STATUS	CTFAN LO	XXXCTSLOS
23.	COOLING TOWER VARIABLE/ CONSTANT SPEED FAN		XXXCTXXENAB
24.	PRIMARY HOT WATER PUMP	HWPRIPUMP S/S	XXXPHWPXXSS

	START/STOP		
25.	PRIMARY HOT WATER PUMP STATUS	HWPRIPUMP	XXXPHWPXXS
26.	PRIMARY HOT WATER SUPPLY TEMP	HW PRI STEMP	XXXPHWST
27.	PRIMARY HOT WATER RETURN TEMP	HW PRI RTEMP	XXXPHWRT
28.	SECONDARY HOT WATER PUMP START/STOP	HWSECPUMP S/S	XXXSHWPXXSS
	FUNCTION	**DESCRIPTION**	**ACRONYMS**
29.	SECONDARY HOT WATER PUMP STATUS	HWSECPUMP	XXXSHWPXXS
30.	SECONDARY HOT WATER SUPPLY TEMPERATURE	HWSSECTEMP	XXXSHWST
31.	SECONDARY HOT WATER RETURN TEMPERATURE	HWRSECTEMP	XXXSHWRT
32.	HOT WATER BOILER ENABLE	HWBLRENAB	XXXBLRXXENAB
33.	HOT WATER BOILER STATUS	HWBLR	XXXBLRXXS
34.	SECONDARY HOT WATER DIFFERENTIAL PRESSURE	SEC HW DIFF. PRESS.	XXXSHWDP

D. Miscellaneous system acronyms

1.	KW METER SUB-STATION(S)	MAIN KWXX	XXXKWHMAINXX
2.	KW METER HVAC	HVAC KW	XXXKWHHVAC
3.	KW METER LIGHTS	LTG KW	XXXKWHLTG
4.	MAIN GAS METER	NAT GAS MAIN	XXXGASMAIN
5.	MAIN WATER METER	WATER MAIN	XXXWTRMAIN

E. Acronym abbreviations

1. XXX - indicates building number

   Example: Plant 1 = 107 or 076
   Plant 2 = 202 or 203
   Plant 5 = 563 or 561

2. AHXX - indicates unit number

   Example: Plants 1, 2 and 5 = 01 through 99

3. If new AHXX or replacement AHXX is added then newly installed AH shall have an XX number one more than the last installed existing AH for building

4. Air Handling (AH) units are units with chilled water coils as the primary cooling medium.

5. Air Conditioning (AC) units are units with direct expansion coils as the primary cooling medium.

6. Computer Room Air Conditioning (CRAC) units are units that monitor and maintain temperature, air distribution, and humidity in a network room or data center.

7. Fan Houses (FH) may contain one or more air handling unit(s).

8. Fan Coils (FC) units are units with or without a chilled water or hot water that are standalone systems that provide conditioned air for a single zone.

9. Descriptions for failure function of a device will include the letter "FAIL" as the last four spaces in the Acronym.

   Example: 159B01FAIL
   107CH01FAIL

10. Any building which has a letter as part of the building number will be listed as follows:

    Example: 195AA01=195A
    195AB01=195B
    195AD01=195D
    153AA01=153C

11. All descriptions referenced on the design documents shall contain the actual building number.

16.1.6 Standard Control Panel Identification

ACP Auxiliary Control Panel
AZP Auxiliary Zone Panel
FP Fire Alarm Panel
MCC Motor Control Center

16.2 LEVEL 0 - CONVENTIONAL CONTROLS

A. Description

System controlled by conventional standalone controllers; electric, electronic, etc.

B. Systems

Must be approved by LM.
SD

16.3 LEVEL 1 – ACL OptiFlex SERIES CONTROL

A. Description

1. All sensors and controlled points connected to ACL OptiFlex Series controllers located in a local panel (ACP).

2. Control function performed by stand-alone ACL OptiFlex Series Controllers.

B. Systems

All systems (variable air volume, make-up air, exhaust, air handler, supply fan, heat exchanger, pump speed control, pressurization system, chilled and hot water systems, humidifiers, generators, lighting, and power.

16.7 SUBMITTALS/REQUIREMENTS

A. Lockheed procurement documents and Division 1 apply to this section of work.

B. Reference Subsection 16.1.3, Paragraph B for minimum quantity of control drawings required.

C. The Designer shall submit AutoCad generated drawings and Portable Document Format (PDF) duplicates of the entire control system for review and approval prior to issuing construction sets.

D. The submittals shall include all supplemental specifications and sequence of operations required by the installing Contractor to perform the work outlined in the control drawings.

END OF SECTION

SECTION 17
SECURITY AND VOICE SYSTEMS DESIGN STANDARDS

17.1 GENERAL

17.1.1 Correlation and Coordination

A. This section provides standards for both Security Systems and Emergency Notification Systems design work. These design standards shall correlate with the current edition of Lockheed Martin Space Systems Co. (LMSSC) Facility Engineering Standards (FES), Construction Specifications Volumes I through IV, and other relevant sections of this Facility Design Standards. Where applicable, the Engineering Construction Details delineated in the FES Construction Specifications shall be used for compatibility to LMSSC existing facilities design.

B. Design and construction documentation for Security Systems (SS), which include Access Control and Alarm Systems (ACAS), Sound Masking (SM), and Closed Circuit Television (CCTV), as well as Emergency Notification Systems (ENS), shall be under the current Construction Specification Institute (CSI) format.

C. Each design shall be fully coordinated with other related architectural and engineering disciplines to eliminate conflicts and omissions, and to ensure that the total project requirements are met. Prudent judgment must be exercised in collaborating design solutions with LMSSC organizations and personnel.

D. All design/construction drawings shall follow LMSSC drawing procedures and standards, unless specifically described otherwise in specific Sections of this Facility Design Standards. Refer to Section 11, Drawing Procedures for all drawing requirements.

17.1.2 Design Philosophy

The design shall be done in a manner to assure that maximum benefit is obtained for the costs expended. Safety and reliability shall not be compromised as a cost saving measure. The methods of analysis and design shall follow established principles of professional engineering practices. Value Engineering is encouraged during the development of the design work.

17.1.3 Codes and Standards

All design and equipment shall comply with the current adopted edition of all applicable city, county, state and federal codes and standards. In addition, the current adopted edition of the following codes, standards and publications, are considered as the governing references to this section. Applicable recommendations of related trade and professional associations not listed here shall also be considered.

California Building Code (CBC)
California Energy Code (CEC)
Local Municipal Codes
American National Standards Institute (ANSI)
American Society for Testing Materials (ASTM)
Factory Mutual Engineering Corporation (FM)
International Electrotechnical Commission (IEC)

Institute of Electrical and Electronic Engineers (IEEE)
Illuminating Engineering Society of North America (IES)
International Power Cable Engineers Association (IPCEA)
Leadership in Energy and Environmental Design (LEED)
Joint Industry Conference (JIC)
National Electric Code (NEC)
National Electrical Manufacturer Association (NEMA)
National Fire Protection Association (NFPA)
Occupational Safety and Health Administration (OSHA)
Underwriters Laboratories (UL)
International Conference of Building Officials (ICBO)
LMSSC Safety and Environmental Protection Standards C-12, Volumes I and II
LMSSC Design Standards
LMSSC Construction Specifications and Engineering Details Volumes I-IV

17.1.4 General Design Criteria

A. LEED Requirements (if pursued, consult with architect/ LMSSC project manager):

1. Products to be of recycled (Credit MR4) and/or local (Credit MR5) materials.
2. Products to be reused (Credit MR3) where feasible.

17.1.5 Design Criteria Submittal

A. The Security Systems Design Effort shall be Supported in Two Basic Ways:

1. Duplicate the design criteria and requirements provided by LMSSC on the security systems construction drawings and specifications.

2. The electrical and general security systems construction support requirements shall be designed directly on the security systems ACAS-support requirements construction drawings.

B. Prior to the initial design criteria being provided, 6 copies of the floor/ area layout(s) shall be furnished to LMSSC. Provide AutoCAD/DWG diskettes per Section 11 of these standards.

C. LMSSC will provide the project designer with the initial security systems design criteria at the 30% design completion. In addition, design inputs, modifications, and revisions will continue to be made until design completion.

D. The final LMSSC input to the security systems design can only be accomplished following the completed interior and Heating Ventilation Air Conditioning (HVAC) system design.

17.1.6 Construction/Installation Documents

A. The SS/ENS Contractor shall have the ability and equipment to read, create, modify, record, and generate computerized as-built drawings and other media by using the AutoCAD Graphic software format using the current Revision, and in accordance with the LMSSC Appendix D Facility Engineering CAD Drawing Standards (FECAD). Drawings shall depict the size, shape, and scale of the project area, with the symbols of all ENS related equipment, positions, and appropriate power and communications circuits and their terminations.

B. The SS/ENS Contractor shall develop construction/installation documents that meet LMSSC standards and all applicable national, federal, state and local codes. The cost

of any changes to the construction/installation documents shall be at the SS/ENS Contractor's expense, unless they are scope changes.

C. As-built record drawings shall also conform per 2.16.

D. The SS/ENS Contractor shall provide materials and execution specification services to include:

1. Identification of potential construction/installation materials, systems and equipment.

2. Development of a list of all potential long lead items, identify time spans, shipping locations, modes of delivery, and estimated delivery dates.

17.1.7 Quality Assurance/Control Program

The SS/ENS Contractor shall provide effective quality assurance/control services to minimize errors and omissions in all elements of the design and construction/installation. The quality assurance/control program shall incorporate appropriate status reporting and procedures for initiating corrective actions throughout the course of the project.

17.2 SECURITY SYSTEMS DESIGN REQUIREMENTS

A. Design Criteria to Support all Security Systems

1. All cable used shall be UL Listed and a stranded conductor type with twisted pairs. The requirement for PVC, plenum, or shielded covering will be determined and submitted as design criteria for each project.

2. All cable runs to be continuous and without splices where possible. When two or more cables are to be connected together, they shall be spliced, soldered, and covered with heat-shrink insulation. All such connections shall be made within a J-box or appropriate conduit network enclosure.

3. All system cables not in conduit must be plenum or plenum/shield type and shall be routed and supported in accordance with FES Construction Specifications, Engineering Construction Detail V4-52.

4. Indoors, conduit shall be Electromagnetic Tubing (EMT) ferrous metal type with ferrous metal compression fittings. Outdoors, sealed rigid steel conduit shall be utilized.

5. Any conduit which penetrates a 45 or 50 Sound Transmission Class (STC), security, or perimeter wall, shall do so through a sealable security fitting mounted on the more secure side of the wall.

6. No wire, cable, or conduit shall be routed inside a 45 or 50 STC or security wall.

7. No cable shall be routed below a false ceiling or in an open high bay environment unless it is in conduit.

8. All 120 volt power circuits supporting security systems shall be dedicated and on emergency back-up.

B. Design Criteria to Support the ACAS Security Systems

1. Provide each secured area with a cabinet/enclosure, called an Area Termination Cabinet (ATC). This cabinet/enclosure shall be a Hoffman, A-20C20ALP, 14 gauge steel NEMA Type 12 cabinet or an approved equivalent. The ATC will be identified in the system, by an Area Designation

Number (ADN) assigned to the area by the ACAS Design group. Unless otherwise noted, ATCs shall not be installed in a secure area where an access control panel or remote monitor cabinet is located.

2. All ATCs shall be wall mounted at a height no greater than 24 inch above the T-bar ceiling or 11 feet above the floor.

3. The location of each ATC will be represented by a symbol with the initials ATC, the ADN, and an alphanumeric “A - F” device support code. Listed beside each code letter will be the quantity of cables needed to support the particular device. Each ATC cover shall be marked with 1 inch white lettering that reads “ACAS-Do Not Open”.

4. The drawing shall have a “device support code” chart, which uses the letters A-F to represent specific types of security devices. Each letter shall be followed by the type of cable and trade/catalog number required to support the device.

5. Provide each ATC with five, double-row barrier terminal strips, UL rated 250-300 volt 20 AMP, of a flexible non-phenolic material. Each strip will support a minimum 24 circuits with terminal screws only.

6. Provide conduit and cable between each ATC and the gutter/wire way in the ACAS room. The conduit shall be sized to the quantity and type of cable specified in the initial, and all subsequent, security systems design criteria submissions.

7. All cable between the ATC and the ACAS room shall be tested, identified, and marked on both ends. At each ATC, pigtail 3 feet of excess cable. At the gutter standard, pigtail sufficient cable footage to route to the opposite side of the ACAS room.

8. Each junction/pull-box in the conduit network, which is 6 inch x 6 inch or larger and located outside the perimeter of the secure area, shall have a hasp and staple affixed to permit securing by padlock. One of a smaller dimension shall have its cover closed and epoxy sealed following cable acceptance.

9. All electrified access control hardware (locks, strikes, etc.), shall operate on 24 volt DC and utilize “fail-secure” mode of operation.

10. All cable supporting access control hardware shall be a shielded type.

11. Provide a wall mounted 4 inch x 4 inch J-box with a dedicated 120 volt circuit on emergency power and a Von Duprin Mini Power Booster, MPB-842, where ACAS entry door requires emergency crash out hardware. The J-box shall be mounted at a height no greater than 24 inch above the T-bar ceiling or 11 feet above the floor. Refer to FES Construction Specifications, Engineering Construction Details V4-46.08, V4-46.09, V4-46.13 and V4-46.14.

C. Design Criteria to Support the SM Security System

1. Provide a wall mounted J-box (duplex outlet) with a 120 volt circuit on emergency power at each SM amplifier/generator location. One AC power circuit shall support no more than 4 SM locations. It shall be at a height no greater than 24 inch above the T-bar ceiling or 11 feet above the floor of each secured area requiring SM.

2. All SM cable shall be a plenum/shielded type when not in conduit and will be routed/supported in accordance with FES Construction Specifications, Engineering Construction Detail V4-52.

3. Under no circumstances shall SM cabling be routed with, or through ACAS support conduit.

D. When electrical design criteria is required to support a CCTV security system, it shall also be represented on the "security systems ACAS-Support Requirements" drawing.

17.3 ACAS ROOM DESIGN REQUIREMENTS

A dedicated space known as the "ACAS room" shall be established and equipped to support the projects security systems, or an ACAS regional computer.

17.3.1 General Specification

The ACAS room's general construction design criteria shall be represented on the appropriate construction drawing.

A. The ACAS Room shall be:

1. Located in a clean and dry ventilated space, with unobstructed free access to the entry door.

2. Furnished with vinyl tile flooring and be free of a false ceiling.

3. Designed with the entry door located at or near the corner of a perimeter wall.

4. Provided with flame-proof, 3/4 inch thick, 4 feet x 8 feet plywood backboard sheets covering all walls. An ACAS room established as a region room shall require only 2 plywood sheets.

B. Space

The minimum space required for the ACAS room is 8 feet Long x 10 feet Wide x 10 feet High for buildings under 100,000 square feet; 10 feet x 10 feet x 10 feet for buildings between 100,000 and 200,000 square feet; and 15 feet x 10 feet x 10 feet for buildings exceeding 200,000 square feet. There shall be 36 inches clear work space in front of all termination fields to provide maximum wall area for equipment.

C. HVAC/Air Conditioning

1. The ACAS room shall be provided with an Air Conditioning Unit (ACU) on emergency power that will operate continuously 24 hours a day, 365 days a year.

2. The ACU shall be thermostatically controlled to maintain a temperature range of 20 to 30 degrees Celsius at less than 85% humidity. The cooling load capability of the ACU shall not be less than 15,000 BTU.

D. Lighting

The ACAS room shall have adequate lighting on emergency back-up power that provides at least 30 foot-candles measured at 3 feet above the floor.

E. Physical Security Requirements

The ACAS room perimeter shall be constructed to offer resistance to, and evidence of, unauthorized entry as described in Section 6, Security Design Standards.

F. Design Criteria to Support the ACAS Room

1. Provide an 8 inch x 8 inch x 48 inch gutter/wire way, mounted on and across the top of each plywood backboard. When more than one gutter/wire way is used they shall be connected together per FES Construction Specifications, Volume IV, Electrical. No 120 volt power shall be routed in the gutter/wire way.

2. Provide a 100 amp, 120/208 volt circuit breaker panel, with 12, single pole, 29 AMP circuit breakers, plus a Neutral and ground buss. The panel shall be fed by a single 120 volt, 50 AMP circuit from an emergency power panel.

3. Provide two 120 volt branch circuits from the circuit breaker panel to each plywood backboard in the ACAS room. Refer to FES Construction Specifications, Engineering Construction Detail V4-46.23.

4. Building ground shall be extended to the ACAS room by a #00 insulated copper cable from the primary integrated wiring center single point ground to a ground strip/bar within the ACAS room. The grounding standard shall be 5.0 ohms maximum to ground at the ground strip.

5. The ACAS room shall be connected to the Main IWC with a 2 inch conduit.

17.4 EMERGENCY NOTIFICATION SYSTEM DESIGN REQUIREMENTS

17.4.1 Summary

This section establishes design services and coordination functions covering such areas as, administration, technical assistance, documentation, costing, reviews, and drawings relating to Emergency Notification Systems (ENS) design.

17.4.2 Introduction

A. This section provides a comprehensive listing of professional services and coordination requirements for both Stand-Alone and General Construction projects to be performed by the LMSSC ENS Contractor.

B. The ENS Contractor shall direct all inquires to the LMSSC project manager on an LMSSC standard "Request For Information" (RFI) form.

C. No work, considered by the ENS Contractor to be a change in the original scope of work, shall be performed without the written authorization of the CA.

The Designer shall support the security systems telecommunications requirements with the necessary construction designs and instructions on appropriate drawing and specifications.

D. The ENS Contractor will be compensated for all material and services in accordance with the current costing and labor criteria as specified in the approved ENS BPA.

17.4.3 Project Administration

A. The ENS Contractor shall provide project administration services during the design to include:

1. Technical assistance relevant to the design of the project.

2. Attendance at all design meetings where issues have been identified that require action by the ENS Contractor.

17.4.4 Technical Assistance, Reviews and Permit Approval

A. The ENS Contractor shall provide consulting, review and permit approval services to include:

1. Appearances at local jurisdiction meetings and reviews to assist in obtaining all permits if applicable to the ENS project.

2. Preparation of all documentation for all local permits or variances if applicable.

3. Construction/installation documents that meet all applicable national, federal, state and local municipal code requirements.

17.4.5 Project Coordination

A. The ENS Contractor shall provide coordination services during all phases to include:

1. Necessary field investigations and research to determine pertinent as-built conditions of the project area. This includes the field survey of all areas, such as desk and board, mezzanines, attic/plenum spaces, electrical/ mechanical/telephone rooms, labs, high bays and roofs. LMSSC will furnish all necessary as-built record drawings of the project area when available; however, LMSSC will not warrant the complete accuracy of these drawings.

2. The cost of any design revisions to the construction/installation documents, which were the result of an inadequate field survey and/or poor as-built drawing verification, shall be at the ENS Contractor's expense.

3. Coordinate design with existing equipment and utilities currently installed or to be installed in the future.

17.4.6 Equipment Installation Design Services

A. The ENS Contractor shall provide equipment installation interfacing design services to include:

1. Field investigation of any existing ENS equipment for possible conversion or modification to meet project needs and to identify any utility support requirements.

2. Feasibility review to ensure economical design.

3. Preliminary design requirements for the relocation of existing ENS equipment, coordination with project layouts and new ENS equipment, and design interfacing of component systems electrical and communications requirements.

4. Final construction/installation design of the above items.

17.4.7 Value Engineering

All value engineering proposals must be submitted no later than the 75% design review mark. No value engineering alternatives shall be implemented without written approval from the LMSSC Project Manager.

17.4.8 Project Scheduling Services

A. During the design phase for stand-alone projects, the ENS Contractor shall provide project scheduling services to include:

1. A preliminary project schedule with the proposal shall be formulated. This schedule shall address major elements of the design showing anticipated dates for the 50%, 75%, and 95% design reviews, and the 100% documentation approval and sign-off dates. In addition, the schedule shall indicate long-lead equipment due dates needed to support the project. The schedule shall also include integration of design, fabrication and installation of LMSSC provided elements. It shall identify final design completion and allow five working days for review and endorsement by LMSSC at each design review.

2. At 100% completion of the design documentation phase, formulate and submit a schedule of all major milestones for the installation project.

B. For general construction projects, the ENS Contractor shall comply with the overall schedule established for the project.

17.4.9 Review and Design Documentation

A. The ENS Contractor shall, for stand-alone projects, provide a review and design documentation services to include:

1. Formal reviews of design documentation and drawings will be conducted at the 50%, 75%, and 95% design marks. LMSSC's final approval and sign-off is required at the 95% mark. LMSSC however, does not assume responsibility for the design's technical accuracy or code compliance.

2. To ensure compliance in the various design review stages and meet the overall project design schedule, the following design review milestones shall be met:

   a. 50% Conceptual design documentation and drawings. Any manufacturer's cut sheets of new ENS equipment that are not currently listed on the approved BPA shall be presented at this time.

   b. 75% Intermediate design documentation and drawings.

   c. 95% Final design documentation and drawings prior to the 100% issue.

   d. 100% Final specifications and drawing package, marked "Issue for Construction".

3. The ENS Contractor shall incorporate LMSSC design comments and corrections at no additional expense as long as they do not change the original scope of work and do not represent a preferential change not previously identified. No work on these changes shall begin without the express written approval of the CA.

4. Following the five working day period for each design review, LMSSC comments and red-marked drawing corrections will be compiled by the PE and submitted to the ENS Contractor.

5. The ENS Contractor shall incorporate all LMSSC design comments and red-marked drawing corrections, or within five working days provide written rational to the ENS PE refuting LMSSC comments.

B. The percentage of design completion and/or revision date, shall be stamped on all documentation and drawings.

C. The ENS Contractor shall, for stand-alone projects, provide LMSSC with 95% construction/installation design documentation and drawings for final approval and sign-off. If corrections to the 95% documentation and/or the drawings are required, final approval and sign-off will not take place until such corrections are made.

D. For both stand-alone and general construction projects, all 95% construction/installation design documentation and drawings must incorporate all LMSSC comments and corrections from previous reviews. These documents and drawings will be issued as the 100% construction/installation design documentation and drawings and shall be annotated "Issue for construction", and at a minimum, shall contain the following:

1. Architectural floor plans

   Full dimension with key architectural details and building sections represented. Locate all partitions and walls.

2. Electrical load analysis

   A schedule showing load requirements of all existing and new ENS equipment going into the project area.

3. Electrical power plans

   Locate all new power requirements, filters, boxes, amplifiers, batteries, chargers, and existing items that require power support components.

4. Fire protection

   Location and component identification of Fire Protection equipment that will interface with the ENS.

5. Communication/data line plans

   Location and identification numbers of ENS interfacing communication circuits.

6. Standard LMSSC cover sheet

   List all drawings and add new notes with information required by local jurisdiction.

7. Conduit network plans

   Entire conduit network showing runs, sizes, junction boxes, and penetrations.

8. System block (Riser) diagrams

   Block diagrams depicting zones, components, and equipment types and amounts.

9. Requirements/specification project manual

This requirements/specifications document shall include requirements and code information necessary to complete the project.

10. Detailed wiring diagrams of complete working system.

17.4.10 Reproduction and Mailing Services

A. The ENS Contractor shall, for stand-alone projects, provide all necessary reproduction and mailing services to include courier, Fed Ex, FAX or similar delivery devices required for timely distribution, as well as the following:

1. Provide LMSSC with two complete sets of construction/installation design documentation and blueline "E" size drawings at the 50%, 75%, and 95% design reviews.

2. Provide LMSSC with ten complete sets of construction/installation design documentation and blueline "E" size drawings, and one (1) set of reproducible vellum/sepia's of the 100% construction/installation documentation and drawings, and all subsequent project revisions. Additional reproduction services shall be on a reimbursable basis.

17.4.11 Design Submittal

The ENS Contractor shall prepare and submit to LMSSC applicable ENS construction/ installation design documentation and drawings described in 17.4.9 and 17.4.10.

17.4.12 Design and Support Requirements

A. The ENS completed 50%, 75%, 95% and 100% construction/installation design documentation and drawings package shall be in accordance with 2-11., and will reflect requirements and details, which best define function, scope, scale, and construction detail. As a minimum, the following shall be included:

1. Drawing(s) titled "Emergency Notification System" which will depict all ENS equipment, devices, wiring, conduit, electrical support, and special details necessary to support the installation project. All elements reflected on this drawing(s) and the associated specifications will be provided and installed by the LMSSC designated ENS Contractor and/or his subcontractor.

2. Special instructions or area zoning will be provided to the ENS Contractor by LMSSC.

3. As a general rule, a zone should not exceed 80 watts. In addition, the number of audio devices on a zone should not exceed 50 Speakers or 10 Loudspeakers/Horns.

4. Included on each ENS drawing shall be the "ENS Symbols Legend", which represent each piece of equipment and/or device used, its manufacturer, and model number.

5. All 120 volt power circuits supporting ENS utility requirements, shall be on dedicated emergency backup. Each circuit and connection shall be mechanically protected, and accessible only to authorized LMSSC personnel.

6. All Power Amplifiers (PA), Preamplifiers (PPA), and signal generator 70V and 0db lines, will be supervised and provided with a self diagnostic system.

7. There shall exist no possibility of intelligent signals from within a secured area being transmitted back through the ENS signal or control input path. Isolation may be provided through PA and PPA circuitry, a one-way fiber-optic path, or some other LMSSC approved method.

8. The failure of any one speaker to operate must not cause failure of other speakers.

9. All ENS audio, control, and ground cables used shall be approved by the CSFM and UL, and sized in accordance with National Electric Code (NEC), Article 760. Cables shall be tinned copper, solid conductors, twisted pairs, and unshielded. In addition, a No. 12 AWG green ground wire shall be installed in each conduit in accordance with NEC Article 760-6, with screw termination between each speaker housing and system ground.

10. To maintain the ENS network within a steel enclosure, all ENS wiring shall be routed in steel EMT conduit and fittings with flex-metallic-steel conduit between junction boxes and speaker housings. In an outdoor environment, rigid steel conduit shall be utilized.

11. All cable runs shall be continuous and without splices where possible. When it is necessary to splice two or more cables together, it shall be in accordance with current applicable codes and standards.

12. Any conduit or cable penetration of a 45/50 Sound Transmission Class (STC) security wall, shall do so through a sealable penetration fitting mounted on the more secure side of the wall.

13. No wire, cable, or conduit shall be concealed in a 45/50 STC security wall.

14. At the completion of the acceptance test, provide LMSSC with five keys to each newly installed ENS related lock. This is in addition to the break glass enclosure requirements.

15. System audibility shall be a minimum of 15 db above the ambient background noise level at 60 inch above the floor and at a distance of 10 feet or greater from a speaker.

16. Speaker (SPK) devices shall be 4 and 8 inch type, in accordance with those listed in the current BPA. SPK housing assemblies and baffle plates shall be constructed of steel and finished in white epoxy paint.

17. The Loudspeaker/Horn (HRN) device shall be the same type as listed in the current BPA. Each HRN shall have multi-tap outputs, with the highest not exceeding 15 watts.

18. An audio output SPK or HRN device shall not be tapped higher than the following:

Wheelock 4 in. SPK	1/2 watt
Soundolier VT & VTF 4 in. SPK	2 watts
Soundolier UHT 8 in. SPK	2 watts
Atlas AP HRN	15 watts

19. The maximum area of coverage and separation between SPK devices shall not exceed the following:

Wheelock 4 in. SPK	250 Sq Ft/NA
Soundolier VT & VTF 4 in. SPK	450 Sq Ft/15 ft.
Soundolier UHT 8 in. SPK	90 Sq Ft/30 ft.

20. When the actual noise level of an area cannot be measured, the following average db levels shall be used to establish and engineer the ENS requirements:

Executive Area	45 db
Desk & Board Area	55 db
Conference Room	60 db
Manufacturing Area	78 db
Computer Room	80 db

17.5 ENS ROOM DESIGN REQUIREMENTS

A dedicated space known as the “ENS Room” shall be established and equipped to support the building and/or area(s) ENS headend equipment.

17.5.1 General Specifications

The ENS room’s general construction design criteria shall be represented on the appropriate construction drawing.

A. The ENS Room shall be:

1. Located in a free access area, near the entrance of the building.

2. In a dry, dust free, ventilated space, accessible to maintenance personnel at all times.

3. Covered with a vinyl tile flooring, not carpet or bare concrete.

4. Equipped with a lockable door (LMSSC supplied 235B6 lock).

5. Provided with a fire resistive treated 3/4 inch 4 foot by 8 foot plywood backboard on 2 walls.

6. Provided with a 42 inch clear work space in front of all termination fields.

7. The door should be designed at the corner of a short wall to provide maximum wall area for equipment.

B. Space

The minimum space required for the ENS room is 8 feet L x 10 feet W x 10 feet H for buildings under 100,000 square feet; 10 feet x 10 feet x 10 feet for buildings between 100,000 and 150,000 square feet; and 12 feet x 10 feet x 10 feet for buildings exceeding 150,000 square feet.

C. Power

Provide a 100 amp, 120/208 volt circuit breaker panel, with 12, single pole, 20 AMP circuit breakers, plus a Neutral and ground buss. The panel shall be fed by a single 120 volt, 50 AMP circuit from an emergency power panel.

D. Grounding

Building ground shall be extended to the ENS room by a #00 insulated copper cable from the primary integrated wiring center single point ground to a ground strip/bar within the ENS room. The grounding standard shall be 5.0 ohms maximum to ground at the ground strip.

E. Environmental

The ENS room shall be provided with air conditioning that will operate continuously 24 hours a day, 365 days a year.

F. Lighting

Adequate lighting will be provided for work operations to be carried out in a safe and healthful manner. The lighting objective is 30 FC measured 3 feet above the floor.

G. The ENS Room shall be connected to the Main IWC with a 1 inch conduit.

17.6 TELECOMMUNICATION SUPPORT

The Designer shall support the security systems telecommunications requirements with the necessary construction designs and instructions on appropriate drawing and specifications.

17.6.1 Main Integrated Wiring Center

Telecommunications support to the Security and ENS systems shall be through the Main Integrated Wiring Center (IWC) as described in Section 9, Telecommunications Design Standards.

A. Conduit and Cable Requirements

1. Provide a 2 inch conduit from the Main IWC to the ACAS room with one 25 pair communications cable. The cable shall be terminated on a 50 pair Telco connector punch down block inside the ACAS.

2. Provide a 1 inch conduit from the Main IWC to the ENS room with pull rope.

B. Communications Support

Provide one standard wall mounted telephone instrument for the ACAS room.

C. Communications Circuits

The number of communications circuits required will be based and determined on the specific needs of the project. However, one telephone voice circuit shall be required for the wall mounted telephone instrument in the ACAS room.

D. Wire RF Filters

When RF filters are required, as described in Section 9, Telecommunications Design Standards, the NEMA 1 shielded cabinet shall be sized to hold 24 two wire RF filters. The actual number of RF filters shall depend on the requirements of the current project.

END OF SECTION

Section 18

OXYGEN-DEFICIENT ATMOSPHERE DESIGN STANDARD

18.1 GENERAL

18.1.1 Scope

A. This standard applies to interior and exterior locations and equipment with a potential for an Oxygen Deficient Atmosphere (ODA) due to the nature of the materials used within the space. This includes, but is not limited to, areas where compressed or liquefied gases are stored or transferred, where an accidental release could reduce the oxygen content of breathable air to unsafe levels, or operations or processes that use large quantities of gases that can dilute or displace normal breathing air. These operations and processes include equipment such as autoclaves, environmental test chambers, liquid cryogen piping, holding tanks, contamination protection boxes, areas purged with gaseous nitrogen or argon, and liquid cryogen dispensing or fill stations.

B. The area to be monitored for an oxygen deficient atmosphere is referred to hereafter as the monitored area

C. The determination of whether this standard applies to an area shall be made by LMSSC Environmental Safety and Health (ESH).

18.1.2 Correlation and Coordination

A. The design, including the location of all components shall be coordinated with and approved by ESH, Technical Maintenance, and area users.

B. Design and construction drawings shall comply with Section 11, Drawing Procedures. The oxygen monitoring system shall be shown on the Electrical Power Plan. Device locations shall also be shown for coordination on the Architectural Floor Plan and called out as “O2 Monitor”.

18.1.3 Codes and Standards

A. Design work shall comply with the current adopted edition of all applicable city, county, state and federal codes and standards. Applicable recommendations of related trade and professional associations shall also be considered.

B. The following regulations and codes regulate design and safe operations in areas potentially subject to oxygen deficiency:

1. Codes and Regulations
   a. Cal/OSHA, Title 8 Section 5149-Oxygen Deficiency and Section 5144-Respiratory Protection.
   b. California Fire Code, Chapter 30-Compressed Gases and Chapter 32-Cryogenic Fluids
   c. California Mechanical Code, Chapter 5-Exhaust Systems

2. Standards

a. LMSSC Standard N1.3.3-T2-ESH-1.0-S49 Oxygen Deficiency establishes safety responsibilities and requirements for oxygen-deficient and oxygen-enriched atmospheres.

3. Best Practices
   a. Mine Safety Appliances [MSA] Gas Detection Handbook
   b. The Gas Monitoring Handbook, G. Anderson and D. Hadden, Avocet Press
   c. Compressed Gas Association, P-1 Safe Handling of Compressed Gases in Containers, P-12 Safe Handling of Cryogenic Liquids, P-14 Accident Prevention in Oxygen Rich and Oxygen Deficient Atmospheres

18.2 DESIGN

18.2.1 Engineering Controls

A. As directed by LMSSC Environmental Safety and Health (ESH), engineering controls shall be incorporated into systems to reduce ODA in high risk areas. Examples of engineering controls include venting and air purging systems, purge fans, mechanical exhaust systems, auto or manual shutdown valves, auto roll up doors leading to the exterior of buildings.

18.2.2 Visibility of Monitored Areas

A. As directed by ESH, windows shall be provided to allow emergency rescue responders full visibility of monitored areas without the need to enter the area.

18.2.3 Oxygen Monitoring and Alarm System Description

A. The oxygen monitoring and alarm system consists of the following components:

1. Oxygen sensors
2. Single point monitor panel
3. Multipoint monitor display panel (where more than a single sensor is required)
4. Warning lights
5. Warning horns
6. Warnings signs
7. Remote alarms

B. Locate all oxygen monitoring and alarm system components as directed by ESH, area users and Technical Maintenance.

C. Oxygen monitors shall have battery back up to provide monitoring in the event of a facility power outage.

18.2.4 Sensors

A. Provide individual sensors where there is a potential for an ODA within an area or piece of equipment. Locate so they are readily accessible for testing, maintenance and replacement without removal of other construction, and with adequate clearance for disassembly.

B. When sampling is required from equipment (i.e. test chambers, autoclaves) or other environments detrimental to the sensors, a sample pump system will be used to draw a sample to a remotely installed sensor.

18.2.5 Warning Devices

A. Provide a dedicated warning light and 95dB alarm horn with each monitor.

B. Provide warning lights and 93 dB alarms horns at each entry point to a monitored area. Connect devices to building emergency power. Synchronize to initiate if any monitor alarm is initiated.

C. Provide additional lights and horns as required so as to be visible and audible all personnel working in the monitored area. Connect devices to building emergency power. Synchronize each device with its associated monitor.

18.2.6 Monitor Display Panels

A. Locate single point monitor display panels in readily visible and accessible locations near each sensor.

B. For multipoint installations, locate multipoint monitoring display panel outside main entrance to the monitored area so the digital display of oxygen concentration will allow emergency responders to assess the oxygen conditions inside the area. Place in a safe location and insure doors in any position or other items will not block visibility or access to panels.

C. Provide a sensor layout diagram at each multipoint display panel for use by emergency responders. The diagram shall consist of a plan of the area showing entry points and sensor locations.

D. Monitor panels shall be hard wired with no plug and cord powered monitors allowed.

18.2.7 Signage

A. Provide “WARNING DO NOT ENTER” signs outside each entry point to the monitored area.

B. Provide “WARNING EVACUATE IMMEDIATELY” signs directly next to each warning light/audible horn location within the monitored area.

18.2.8 Alarm Connections

A. For the Palo Alto facility, alarm signals from oxygen monitors shall be transmitted to the local building Fire Alarm Control Panel, (FACP) into which all oxygen deficiency and supervisory alarm circuits shall be incorporated for retransmission to the LMSSC Fire Department Central Station. Monitor fault signals shall be transmitted to the Facility Maintenance Alarm System (FMAS).

B. For the Sunnyvale facility, alarm and monitor fault signals (from normally closed contacts) generated from oxygen monitors shall be connected to FMAS.

C. Monitors integrated into process equipment are exempt from alarm connection requirements, unless directed otherwise by ESH.

END OF SECTION

Section-19
STATIONARY CRYOGENIC SYSTEMS
DESIGN STANDARD

19-1 GENERAL

19-1.1 Purpose:

A. The purpose of this document is to provide a guideline for the design of stationary cryogenic storage tanks, vaporizers, regulators, valves, instrumentation, distribution piping systems, and associated insulation for liquid or gaseous Nitrogen, Helium, and Argon per the latest Codes and Standards outlined in Paragraph-1.4 below.

19-1.2 Scope:

A. This standard shall be applied to stationary cryogenic storage and distribution systems and stationary gas distribution systems.

B. Areas of concern include all cryogenic systems, distribution piping, venting systems, holding tanks, and transfer tanks located outside building structures or in cryogenic yards.

C. Most of the Cryogenic Systems' installations are constructed and owned by LMSSC. (Explain the differences between our leased and owned systems)

1. Leased Cryogenic Systems: Are those systems that are solely owned by a cryogenic supplier such as Air Products, Air Liquid or BOC Edwards. These systems are usually designed and installed by the suppliers on cryogenic pads designed and built by LMSSC on their own property.

2. Owned Cryogenic Systems: Are those system that are installed on LMSSC property where system components such as tanks, vaporizers, pumps, telemetry equipment, interconnect piping and monitoring sensors are fully owned and installed by LMSSC.

19-1.3 Related Work:

A. Mechanical (Piping) – Design per the following Division-15000 Mechanical Specifications. Refer to Attachment-6.

1. Section-15078 Cryogenic Piping Systems.

19-1.4 Correlation and Coordination:

A. These design standards shall correlate with other relevant sections of the Facility Engineering Standards.

B. The design shall be fully coordinated with other related architectural and engineering disciplines to eliminate conflicts and omissions, and to ensure that total project requirements are met.

C. Design and construction drawings shall comply with Section 11, Drawing Procedures. Cryogenic equipment locations shall be shown on the Building Site Plan, Piping Plans and Architectural Plans for coordination purposes, and shall be identified per equipment name and tag number.

19-1.5 Purity Specifications:

A. Cryogenic Liquid Purity Specification: As established by the end user on a case by case basis.

B. Gas Supply Purity Specification: As established by the end user on a case by case basis.

19-1.6 Applicable Codes and Standards:

A. LMSSC Pressure Safety Standard 1.3.3-T1-57.0-S establishes minimum requirements for unfired pressure vessels or systems used in Lockheed Martin Space Systems Company operations. This standard covers the general requirements for unfired pressure vessels and systems. It includes the definitions used in describing such systems and the potential hazards associated with pressure vessels and systems and minimum requirements to adequately control these hazards. Also included are the training requirements and the safe practices to be followed.

B. LMSSC Cryogenic Safety Standard 1.3.3-T1-ESH-20-S establishes the minimum requirements for handling and using cryogenic liquids in Lockheed Martin Space Systems Company operations. This standard outlines the safety requirements for handling and use of cryogenic fluids. It also addresses oxygen-deficient atmospheres that may not be covered under "Confined Space Entry", Safety & Environmental Protection Standard 5.4. It applies to all systems whether part of plant facilities, test equipment, or end products. These are minimum requirements and do not exclude more stringent state, local and/or customer requirements.

C. California Building, Fire, Mechanical and Plumbing Codes latest edition.

D. Chapter-55.05 of the 2007 California Fire Code.

E. National Fire Protection Association (NFPA-55 Standards the Storage, Use, and handling of Compressed Gases and cryogenic fluids in Portable and Stationary Containers, Cylinders, and Tanks) latest Edition.

F. ASME Boiler and Pressure Vessel Code, Section VIII.

G. ASME Piping Code (B31).

H. CGA P-12-1993, Safe Handling of Cryogenic Liquids.

I. CGA P-18 Standard for Bulk Inert Gas systems.

J. CGA S-1.1, Pressure Relief Device Standards – Part 1 Cylinders for Compressed Gases [6].

K. CGA S-1.2, Pressure Relief Device Standards – Part 2 Cargo and Portable Tanks for Compressed Gases [7].

L. CGA S-1.3, Pressure Relief Device Standards – Part 3 Compressed Gas Storage Containers [8].

M. CGA V-1, American National, Canadian, and Compressed Gas Association Standard for Compressed Gas Cylinder Valve Outlet and Inlet Connection [25].

N. AWS-D1.1

O. AWS-D1.6

P. Piping System Cleaning Specification

19-2 CRYOGENIC PAD DESIGN

19-2.1 General:

A. Location: Cryogenic pad shall be located relative to building openings, air handling equipment, and air intakes, or adjacent to the property line in accordance with NFPA 55 and 2007 California Fire Code Chapter-32, as listed below and detailed in Attachment-1.0 Sample Cryogenic Pad Site Layout.

Cryogenic Pad Location From:	Minimum Distance			Remarks
	Inert	Flammable	Oxidizer	
Building	1-foot	50-feet	50-feet	
Nearest Building Opening or Entrance	1-foot	75-feet	10-feet	
Nearest Air Handling Systems Air Intake	10-feet	75-feet	10-feet	
Property Line	5-feet	50-feet	5-feet	Fire rated separation wall is not required
LMSSC Outdoor break area (places of public assembly)	50-feet	75-feet	50-feet	Per LMSSC Safety Guidelines
Combustible Material such as leaves, weeds, dry grass or debris	15			Reduce to 1-foot if a 2-hour separation is provided

B. Fire rated separation wall, when necessary, shall be designed at a height sufficient to provide full fire rated separation from adjacent properties and for security purposes.

C. Stationary storage tanks, vaporizers and appurtenances shall be installed with sufficient access space between any two adjacent components and any component adjacent to a wall or fence. This space shall be sufficient for safe maintenance access and for air circulation around the vaporizers as established in NFPA 55 and 2007 California Fire Code Chapter-32, and must not be less than that specified by the equipment manufacturer or as shown in Attachment-2.0 Sample Cryogenic Pad Equipment Layout, whichever is more stringent.

D. Truck Access: shall be as established by NFPA 55 and 2007 California Fire Code Chapter-32. Special consideration shall be taken for cryogenic liquid delivery trailer truck access. It is recommended that clear circulation to and from the cryogenic pad be provided per the following table:

Truck Description	Length	Width	Minimum One Way Road Width	Minimum Two Way Road Width	Recommended Road Width at Fill Station	Combination Minimum Turning Radius
Semi-Trailer & Road Tractor	55-ft	8-ft	12-ft	24-ft	36-ft	55-ft

19-2.2 Structural - Cryogenic Pad & Equipment Anchoring:

A. Foundation and supports: shall be provided to support the weight of the product and all equipment including vaporizers as well as the maximum ice load and shall be designed to carry applicable seismic and wind loads. Special consideration shall be taken when designing concrete slabs and foundations for Stationary cryogenic storage tanks to include:

1. Soils condition, water table height, seismic requirements and frost conditions in the event of liquid nitrogen leak over the concrete pad. Concrete foundation shall be designed based on local Building Code seismic guidelines applicable to the installation.

2. Leased stationary storage tanks and vaporizers: Concrete foundation design shall be completed by the cryogenic vendor, who shall submit design drawings and specifications wet stamped and signed by a structural engineer licensed in the State in which the project is being executed.

3. Owned stationary storage tanks and vaporizers: Concrete foundation design shall be accepted by LMSSC. Project manager shall provide structural engineer with all information relevant to preparing a successful design and calculations in compliance with local codes and standards. This shall include soils report, site map, site topographical maps and drawings for underground utilities, equipment dimensions, weights and center of gravity. Project manager shall obtain equipment cut sheets from successful equipment vendor.

B. Equipment Anchoring:

1. Vertical or Horizontal tank installation whether on a concrete pad or on elevated concrete or steel pedestals shall be appropriately designed using seismic and wind loading per the International Building Code Chapter 16 for California installations and local building codes for other installations.

C. Pad Drainage / sloping

1. Concrete pad shall be sloped at least 1/8” per linear foot to direct condensed water to a location approved by Lockheed’s ES&H Department.

D. Concrete Pad Protection from Liquid Cryogen Spills and Drains:

1. Tanker Connection Fill Station: Direct drain and vent pipes from the cryogen fill pipe towards a gravel filled Aluminum cylinder that is 24” diameter x 16” high. Locate cylinder several feet away from the hose connection port for personnel protection and secure to the pad. Depending on the installation, if safe venting is not practical provide a gravel filled pit at a safe location away from the fill port.

2. PRV Discharge: Direct Pressure Relief Valve (PRV) away from personnel access area and towards a safe location. Install PRV valve to discharge at 45 degrees below the horizontal.

19-3 CRYOGENIC EQUIPMENT

19-3.1 General:

A. Cryogenic equipment including tanks, vaporizers and metering stations, whether leased or purchased, shall be covered by these standards.

19-3.2 Cryogenic Tanks:

A. Liquid cryogen tanks are of three categories:

1. Atmospheric vacuum jacketed storage tanks
2. Atmospheric double wall insulated tank with perlite fill and N2 purge.
3. Pressurized vacuum jacketed storage tanks.

B. Liquid cryogen tanks shall be equipped with all necessary nozzles for level sensing, pressure sensing, tank filling, tank evacuation, liquid discharge, liquid return when necessary, pressure relief for pressure relief valves and for rupture discs installation, tank venting, pressure building vaporizer coil inlet and outlet nozzles, and additional nozzles for future use. Refer to Attachment-7.1 Sample Cryogen Tank Cut Sheet

C. Atmospheric vacuum jacketed cryogen tanks are tanks that use gravity to deliver liquid cryogen to local pump stations, which in turn pressurize the liquid to the appropriate delivery pressure to the point of use through a liquid cryogen distribution piping system.

1. Tank monitoring:

   Tank shall be equipped with the following monitoring features and devices. Each device shall be preceded by an isolation valve for ease of maintenance and monitoring device replacement while tank is in operation.

   a. Mechanical liquid level gauge equipped with two tubes, one connected to the bottom of the tank and the second connected to the top of the tank with an equalization bypass valve in order to determine liquid level in the tank.

   b. Electronic tank level and pressure monitoring system as manufactured by Chart or equal. Refer to Attachment-9 Sample tank level and pressure monitoring system Cut Sheet. Monitoring system shall:
      1) Be provided to electronically monitor tank level via a differential pressure level gauge. Tank level shall be indicated as “Percent Full”.
      2) Programmable to provide necessary alerts of tank level and pressure.
      3) Display tank level in percent full, and internal pressure on digital readouts.
      4) Have adjustable tank level and pressure alerts.
      5) Be Telemetry ready with Liquid Re-order phone system with automatic dialing to liquid cryogen supplier.
      6) Have digital and 4-20 mA output signals.
      7) Have a NEMA-4 water and weather tight enclosure
      8) Be equipped with equalization valves
      9) Require 120-Volt AC power source.

   c. Vacuum monitoring of tank’s annular space with a 4-20 mA signal to a local monitoring controller described in paragraph “b” above. Locate vacuum port at 5’-0” above grade. Provide local and remote audio/visual alarm annunciator. Controller shall initiate a warning signal upon reduction of vacuum level below 20”-Hg and an alarm signal upon reduction of vacuum level below 15”-Hg.

2. Tank Venting: Atmospheric cryogen storage tanks shall be equipped with a tank venting nozzle.

   a. Vent piping shall be connected to nozzle and extended to a location in compliance with NFPA-55 and shall be approved by Lockheed’s ES&H Department. Vent pipe icing could be minimized by installing a Chromalox or equal pipe heater with UL listed controller and a temperature sensor interlocked with the pipe heater, which shall be programmed to activate the pipe heater when vent pipe temperature reaches 32 Deg.

Fahrenheit. Heater activation temperature shall be programmable and shall be determined by the end user during system start up and commissioning. Chomalox pipe heater shall be sized to ensure complete evaporation of worst-case liquid cryogen discharge volume to avoid unnecessary pipe icing.

b. Vent pipe could also be extended to a temporary liquid cryogen capture reservoir equipped with a CALROD or equal immersion heater and a UL listed controller and a temperature sensor interlocked with the heater. Temperature controller shall be programmed to activate the pipe heater when holding tank temperature reaches -320 Deg. Fahrenheit. Heater activation temperature shall be programmable and shall be determined by the end user during system start up and commissioning. Immersion heater shall be sized to ensure complete evaporation of worst-case liquid cryogen discharge volume.

D. Atmospheric double wall insulated tanks are tanks that are insulated with a perlite fill and continuously purged with nitrogen gas to keep moisture out of the annular space. Similar to the vacuum jacketed tanks, insulated tanks use gravity to deliver liquid cryogen to local pump stations, which in turn pressurize the liquid to the appropriate delivery pressure to the point of use through a liquid cryogen distribution piping system.

1. Tank monitoring:

   Tank shall be equipped with the following monitoring features and devices. Each device shall be preceded by an isolation valve for ease of maintenance and monitoring device replacement while tank is in operation.

   a. Mechanical liquid level gauge equipped with two tubes, one connected to the bottom of the tank and the second connected to the top of the tank with an equalization bypass valve in order to determine liquid level in the tank.

   b. Electronic tank level and pressure monitoring system as manufactured by Chart or equal. Refer to Attachment-9 Sample tank level and pressure monitoring system Cut Sheet. Monitoring system shall:
      1) Be provided to electronically monitor tank level via a differential pressure level gauge. Tank level shall be indicated as “Percent Full”.
      2) Programmable to provide necessary alerts of tank level and pressure.
      3) Display tank level in percent full, and internal pressure on digital readouts.
      4) Have adjustable tank level and pressure alerts.
      5) Be Telemetry ready with Liquid Re-order phone system with automatic dialing to liquid cryogen supplier.
      6) Have digital and 4-20 mA output signals.
      7) Have a NEMA-4 water and weather tight enclosure
      8) Be equipped with equalization valves
      9) Require 120-Volt AC power source.

   c. Pressure monitoring of outer tank’s annular space with a 4-20 mA signal to a local monitoring controller described in paragraph “b” above. Locate pressure transducer port at 5’-0” above grade. Provide local and remote audio/visual alarm annunciator. Controller shall initiate a warning signal upon increase of pressure level above 1-psig and an alarm signal upon increase of pressure level to 4-psig.

2. Tank Venting: Atmospheric cryogen storage tanks shall be equipped with a tank venting nozzle.

   a. Vent piping shall be connected to nozzle and extended to a location approved by Lockheed’s ES&H Department. Vent pipe icing could be minimized by installing a Chromalox pipe heater with UL listed controller and a temperature sensor interlocked with the pipe heater, which shall be programmed to activate the pipe heater when vent pipe temperature reaches 32 Deg. Fahrenheit. Heater activation temperature shall be programmable and shall be determined by the end user during system start

up and commissioning.. Chomalox pipe heater shall be sized to ensure complete evaporation of worst-case liquid cryogen discharge volume to avoid unnecessary pipe icing.

b. Vent pipe could also be extended to a temporary liquid cryogen capture reservoir equipped with a CALROD immersion heater and a UL listed controller and a temperature sensor interlocked with the heater. Temperature controller shall be programmed to activate the pipe heater when holding tank temperature reaches -320 Deg. Fahrenheit. Heater activation temperature shall be programmable and shall be determined by the end user during system start up and commissioning. Immersion heater shall be sized to ensure complete evaporation of worst-case liquid cryogen discharge volume.

E. Pressurized vacuum jacketed cryogen tanks are tanks that use cryogen gas pressure to deliver liquid cryogen to vaporizers or to the point of use through a liquid cryogen distribution piping system. These tanks shall be designed and built as pressure vessels and shall be ASME stamped. Refer to Attachment-7.1 Sample Cryogen Tank Cut Sheet. Pressurized cryogen tanks shall be equipped with the following devices:

1. Pressure builder evaporation coil with liquid cryogen fed from the bottom of the tank, then gaseous cryogen is regulated through a pressure regulator and injected into the top of the tank. Gaseous cryogen pressure within the tank forces cryogen liquid out to local gas generating vaporizers or to remote liquid cryogen dispensing stations. Pressure builder shall also be equipped with dedicated pressure relief valves in each pipe segment that could be isolated with two valves where liquid cryogen could be trapped.

2. Dual tank pressure relief manifold with a manual three-way diverter valve. Each leg of the manifold shall be equipped with a pressure relief valve in parallel with a rupture disc.

3. Rupture disc located at the top of the tank.

4. Tank monitoring:

   Tank shall be equipped with the following monitoring features and devices. Each device shall be preceded by an isolation valve for ease of maintenance and monitoring device replacement while the tank is in operation.

   a. Pressure monitoring via:
      1) Pressure indicator (gauge) with 0 – 200 psi dial.
      2) Pressure transducer with 4-20 mA output signal to be connected to the electronic tank level and pressure monitoring system described in paragraph “c” below.

   b. Mechanical liquid level gauge equipped with two tubes, one connected to the bottom of the tank and the second connected to the top of the tank with an equalization bypass valve in order to determine liquid level in the tank.

   c. Electronic tank level and pressure monitoring system as manufactured by Chart or equal. Refer to Attachment-9 Sample tank level and pressure monitoring system Cut Sheet. Monitoring system shall:
      1) Be provided to electronically monitor tank level via a differential pressure level gauge. Tank level shall be indicated as “Percent Full”.
      2) Programmable to provide necessary alerts of tank level and pressure.
      3) Display tank level in percent full, and internal pressure on digital readouts.
      4) Have adjustable tank level and pressure alerts.
      5) Be Telemetry ready with liquid Reorder phone system with automatic dialing to liquid cryogen supplier.
      6) Have digital and 4-20 mA output signals.
      7) Have a NEMA-4 water and weather tight enclosure
      8) Be equipped with equalization valves and
      9) Require 120-Volt AC power source.

d. Vacuum monitoring of tank's annular space with a 4-20 mA signal to a local monitoring controller described in paragraph "c" above. Locate vacuum port at 5'-0" above grade. Provide local and remote audio/visual alarm annunciator. Controller shall initiate a warning signal upon reduction of vacuum level below 20"-Hg and an alarm signal upon reduction of vacuum level below 15"-Hg.

19-3.3 Vaporizer:

A. Cryogenic liquid vaporizers shall be built of stainless steel 316 tubing and aluminum fins as manufactured by Cryogenic Experts, Inc. (CEXI) or equal. Electro Polished stainless steel tubing could be provided if required by the application. Cryogenic vaporizers are of three types:

1. Air Vaporizers:

a. Free convection vaporizers: are manufactured either with normal gap or extended gap to minimize ice bridging and depend on free air movement and ambient conditions to vaporize liquid cryogen through the vaporizer assembly and deliver gas to the point of use through a gas distribution system. System designer shall be cautious and place free convection vaporizers in areas with East, South or West exposures. Should a North exposure be inevitable, care must be taken in sizing the vaporizer assembly to avoid icing during peak gas usage in cold weather conditions. Refer to Attachment-7.2.1 Sample Free Convection Vaporizer Cut Sheet.

b. Forced Draft Ambient Vaporizers: are usually equipped with a stainless steel or aluminum skin on all four sides and a forced air fan that draws ambient air through the vaporizer and skin assembly, where fan is located on top of the vaporizer with a local electrical disconnect mounted on vaporizer frame within four feet above grade. Forced draft vaporizers are used in areas where pad space is limited and a small footprint is required. They are also used in installations with North exposure that have limited sun exposure to minimize icing and optimize liquid cryogen vaporization. Refer to Attachment-7.2.2 Sample Forced Draft Vaporizer Cut Sheet.

c. Size both free convection and forced draft vaporizers for at least 1-1/2 times peak gas demand to minimize icing during abnormal gas consumption and during abnormal weather conditions that increase icing on the vaporizers.

2. Steam Vaporizers:

a. Water Bath Immersion Type Vaporizers: Steam heated water bath vaporizers as manufactured by Cryogenic Experts, Inc. or equal. See cut sheet Attachment-7.3.1.

b. Shell and Tube steam heated vaporizers as manufactured by Cryogenic Experts, Inc. or equal. See cut sheet Attachment-7.3.1

B. Size steam vaporizers for at least 1-1/2 times peak gas demand to avoid icing during abnormal gas consumption.

19-3.4 Cryogenic Liquids Distribution Pumps:

Cryogenic pumps shall be compatible with cryogenic temperatures operation with minimum or no effect on pumps' seals and gaskets when pumping liquid cryogen. Three types of liquid cryogenic pumps are used: 1) Base mounted centrifugal pumps, 2) Well type submergible centrifugal pumps, and 3) Belt drive reciprocating centrifugal pumps.

A. **Base mounted centrifugal pumps**: Shall be used with (N+1) redundancy. These pumps shall be used when high flow with low to medium pressure is required.

1. Due to pump exposure to temperature extremes between ambient and cryogenic temperatures, pumps' seals would experience multiple expansions and contractions, which result in seal failure and pump leakage.

2. When designing cryogen distribution systems with base mounted centrifugal pumps ensure continuous cryogen circulation to prevent gas build up and pump cavitation. This will keep pumps' temperature at a level acceptable to start liquid cryogen delivery to the point of use without risking pump cavitation. Shutting down cryogen delivery pumps causes pumps to warm up and gas evaporation within the pumps' volute, which causes pump cavitation if started up improperly. Continuous circulation of liquid cryogen could be achieved by providing pumps with variable frequency drives (VFD's) to allow the pumps to operate at partial speed during idle time. This will ensure that pumps will be ready to deliver liquid cryogen to the point of use when needed. Refer to Attachment-3.2 for Liquid Cryogen Distribution System Schematic Diagram with Centrifugal Pumps.

3. When pumps are shut down and liquid cryogen circulation is not possible, distribution pumps and associated piping shall be flooded with liquid cryogen to ensure proper system cooling prior to starting pumps to deliver liquid cryogen to the point of use. System cooling down period shall be established by the end user. During the cooling-up period, both gaseous and liquid cryogen should be directed back to the gravity storage cryogenic tanks. Gaseous cryogen will then vent off the tank's vent pipe, while liquid cryogen will return to the tank for re-use.

4. Pumps shall be installed in a duplex system with full automatic control to include. (design of pump stations shall be considered on a case by case basis):

   a. Two pumps shall be on duty running at partial speed and controlled by VFD's. Pumps' speed shall be controlled by a pressure transducer in the liquid cryogen supply pipe. When one pumps fails, the remaining pump shall ramp up speed until liquid supply pressure is achieved.

   b. Pump skid shall be equipped with a PLC based control panel with the following features:
      1) Pumps' Hand/Off/Auto select switch
      2) Pumps' Lead/Lag select switch
      3) Pumps' on pilot light (green) and Off pilot light (Red)
      4) Pump skid trouble alarm red light with local buzzer and a silencing switch with a programmable time delay function.
      5) Ethernet port for remote monitoring of pumps skid.
      6) Automatic liquid supply control
      7) Over pressure switch
      8) Hour meter
      9) Vent pipe temperature sensor with local and remote indicator and audio/visual warning and alarm annunciator.

B. **Well Type Centrifugal Pumps (EXISTING IN B159W BUT NOT RECOMMENDED)**: these pumps are custom built and could only be purchased by a special order and have an 8-month lead-time. Well type centrifugal pumps have an advantage over base mounted pumps by remaining flooded with cryogen liquid, which prevents liquid boil off and pumps from cavitating. These pumps shall be used when high flow with low to medium pressure is required.

   1. Pumps shall be installed in dual system with full automatic control to include:

      a. One pump on duty and one on stand by with automatic switch over upon duty pump failure. Or, both pumps could operate simultaneously at partial speed, and when one pumps fails, the second pump shall ramp up speed until liquid cryogen delivery pressure is achieved. This will ensure continuous facility operation and ease of pump repair.

      b. Pump skid shall be equipped with a PLC based control panel with the following features:
         1) Pumps' Hand/Off/Auto select switch

2) Pumps' Lead/Lag select switch
3) Pumps On pilot light (green) and Off pilot light (Red)
4) Pump skid trouble alarm red light with local buzzer and a silencing switch with a programmable time delay function.
5) Ethernet port for remote monitoring of pumps skid.
6) Automatic liquid supply control
7) Over pressure switch
8) Hour meter

2. Liquid cryogen system shall be equipped with a recirculating glycol loop to feed the pumps' assembly mounting plate to prevent moisture condensation and motor icing.

3. Pumps' well shall be installed in a position to remain flooded with liquid cryogen to ensure Available NPSF and prevent pump cavitation.

4. It is worth noting that although well type centrifugal pumps installation is the most reliable compared to other pump types, these pumps are custom made and require 8-month lead-time. In addition, Re-building these pumps require shutting down the operation for an extended period of time.

C. **Low Flow Reciprocating Pumps**: shall be as manufactured by CRYOSTAR USA, 5897 Colony Drive, Bethlehem, PA 18017 or approved equal. These pumps shall be used for low flow with medium to high delivery pressure.

1. Pumps shall be installed in a dual system with full automatic control to include:

a. One pump on duty and one on stand by with automatic switch over upon duty pump failure. This will ensure continuous facility operation and ease of pump repair.

b. Pump skid shall be equipped with PLC based control panel with the following features:
1) Pumps' Hand/Off/Auto select switch
2) Pumps' Lead/Lag select switch
3) Pumps On pilot light (green) and Off pilot light (Red)
4) Pump skid trouble red light with local buzzer and a silencing switch with a programmable time delay function.
5) Ethernet port for remote monitoring of pumps skid.
6) Permissive start & cavitation shutdown control
7) Shaft seal shutdown control
8) Automatic un-loader control
9) Automatic liquid supply control
10) Over pressure switch
11) Hour meter

2. Reciprocating pumps are reliable in delivering low flow high pressure cryogenic liquids. With N+1 installation and direct access for pump maintenance, this type of pumps is easy to maintain and readily available.

3. Cryogenic pumps' suction piping shall be:

a. Vacuum jacketed and dedicated feed pipe from the liquid cryogen tank.

b. Equipped with a gas (phase) separator, which is provided by Cryostar as a built-in pump feature. However, Cryomet pump manufacturer does not have this feature but should be considered by cryogenic system designer to be part of system design.

19-4 PIPING SYSTEM DESIGN

19-4.1 General:

A. Refer to Attachment-4.0 Sample Process & Instrumentation Diagrams, Attachment-9.0

Piping, Fittings, Valves & Appurtenances Cut Sheets, Attachment-6 Section-15078 Cryogenic Piping Systems

19-4.2 Materials of Construction:

A. Cryogen fill piping to tank and distribution piping from tank to vaporizers – Provide cleaned for oxygen use copper piping system. Refer to Attachment-10.1 ACR Copper Pipe & Fittings Cut Sheet, Attachment-10.8 Sample Hand Control Valve Cut Sheet non-Vacuum Jacketed, and Attachment-6 Section-15078 Cryogenic Piping Systems

1. Cleaned for Oxygen use, Type-K, hard drawn seamless copper pipe, per ASTM B88 with wrought copper pressure fittings, per ASTM B75, and Flowserve Worcester Cryogenic 3-piece ball valve with extended bayonet C44 or equal.

2. 300 Series stainless steel piping with welded joints and stainless steel ball valves with extended bayonet can be used as an option to Type-K copper piping.

B. Cryogen distribution to equipment – Two types of piping systems are available for this application:

1. Static Vacuum Jacketed piping, fittings and valves.

a. Techniguard rigid vacuum jacketed piping system manufactured by Technifab Products. Refer to Attachment-10.2 Sample Vacuum Jacketed Piping Cut Sheet – Technifab and Attachment-10.3 Sample Hand Control Valve Cut Sheet Vacuum Jacketed - Technifab

b. Vacuum Insulated pipe with dissimilar metal bayonet connections manufactured by Chart. Refer to Attachment-10.4 Sample Vacuum Jacketed Piping Cut Sheet – Chart, and Attachment-10.5 Sample Hand Control Valve Cut Sheet Vacuum Jacketed – Chart.

2. Dynamic Vacuum Jacketed piping, fittings and valves as manufactured by Vacuum Barrier Systems (VBS). This system requires a vacuum pump to continuously evacuate the pipe assembly to ensure vacuum insulation. Refer to Attachment-10.6 Sample Vacuum Jacketed Piping Cut Sheet – VBS, and Attachment-10.7 Sample Hand Control Valve Cut Sheet Vacuum Jacketed – VBS.

C. Cryogen distribution from tank to Dewar Fill Station:

1. Insulated Type-K copper pipe and fittings with brazed joints and brass valves with extended bayonet similar to Pragraph-xx-4.2-A.1 above.

2. Vacuum Jacketed piping, fittings and valves similar to Pragraph-xx-4.2-B above.

19-4.3 Piping Design Guidelines:

A. Liquid Cryogen Distribution Piping:

1. Pipe sizing: Size distribution piping with flow velocity between 3.5 and 5 foot per second in order to minimize pressure losses and liquid flashing in the delivery pipe.

2. Piping support: Where rigid vacuum jacketed or insulated cryogen distribution piping is used, provide pipe support anchors and guides to allow piping to contract and expand. Refer to Attachment-6 Section-15078 Cryogenic Piping Systems

3. Pipe Contraction and Expansion:

a. Provide expansion loops at frequent lengths to allow for no more than 1% expansion of pipe segment in any direction. Size expansion loops to allow piping to move with minimum stress on pipe fittings. Refer to Attachment-4.5 Expansion Loop Anchoring Detail.

b. Where contraction loops installation is not practical, provide reinforced stainless steel

304 flexible bellows to compensate for pipe contraction and expansion. Size bellows to allow for peak-to-peak pipe contraction and expansion. Provide at least four retaining rods across the bellows flanged connections to avoid excessive travel and bellows rupture. Provide bellows at each turn in direction on a compact cryogen distribution skid

4. Vibration Isolation: Provide stainless steel bellow at pumps suction and discharge to minimize pump vibration effect on piping system

5. Seismic Loops: Provide seismic expansion loops at pipe penetrations through building wall. Seismic loops shall be supported from wall structure in a manner to allow wall-anchored pipe and pad supported pipe to move freely during seismic activity. Seismic loop shall be sized to allow for peak-to-peak seismic amplitude for the seismic zone in the geographical area.

6. Cryogen distribution pump skids:

   a. Provide a bypass pipe with a control valve at each pump's discharge riser to allow diverting two-phase liquid cryogen during pump cooling period. Control valve outlet pipe shall discharge into an ASME stamped approved pressure vessel phase separator tank in order to collect the liquid and vent off the gas through a dedicated vent pipe installed at the top of the tank. Vent pipe shall extend to a location approved by Lockheed's ES&H Department. Refer to Attachment-3.2 Sample Cryogenic System Process & Instrumentation Diagram Liquid Distribution.

   b. Provide PRV's at each pump discharge venting riser to allow gas release after pumps' shutdown and warm up. PRV's shall be Brass Cryo-Flow Relief Valve 19434 as manufactured by Rego, Generant or equal. Refer to Attachment-10.9 Sample Pressure Relief Valve Cut Sheet. Refer to Attachment-4.3 Pressure Relief Valve Installation Detail

7. Liquid Cryogen Delivery Station: Applies to both pumped supply piping system and to supply piping system pressurized by gaseous cryogen tank head pressure. Refer to Attachment-8 Sample Instruments Schedule and Cut Sheets. Provide pressure regulating and flow-monitoring stations in each liquid cryogen main header prior to distribution into the building as outlined herein.

   a. Pressure regulating: Provide a pressure regulator with inlet and outlet pressure indicators (gauges), pressure relief valves, and a normally closed manual bypass valve. PRV discharge shall be directed away from personnel access and shall be pointed 45 degrees below horizontal. Refer to Attachment-4.3 Pressure Relief Valve Installation Detail.

   b. Pressure monitoring: Provide a 4-20 mA pressure transducer at the inlet and outlet to the pressure regulators and connect signal wiring to the building management system for pressure monitoring purposes.

   c. Flow Monitoring: Provide a digital flow-metering device with a local flow totalizer controller equipped with an Ethernet port or with 4-20 mA output terminals to be connected to the building management system for monitoring purposes.

   d. Building management system shall be programmed to:

      1) Initiate a local and remote warning signal - amber light when liquid delivery line pressure exceeds normal system operating pressure by 15%.

      2) Initiate a local and remote audio/visual alarm signal - red light beacon with horn when liquid delivery line pressure exceed preset system operating pressure by a minimum of 20%, and initiate a notification signal to maintenance personnel. End user shall determine systems and components that should be shut down to avoid damage.

      3) When liquid delivery system pressure exceeds the second preset pressure level, a mechanical pressure relief valve shall activate to relief excess pressure from the delivery piping system. In the case of atmospheric storage tanks, mechanical relief valve (back pressure sustaining valve) shall be connected to a tank inlet nozzle to circulate liquid cryogen back to the tank. See Paragraph-g below.

      4) For each specific installation, the end user shall:

         a) Determine system operating pressure,

         b) Pressure at which a warning signal is initiated,

         c) Pressure at which an alarm signal is initiated,

         d) Pressure at which PRV will be activated

   e. Pressure Control:

      1) Atmospheric tanks: cryogenic systems pressure shall comply with Lockheed's "Pressure Systems Standard". Where liquid cryogen demand is intermittent, provide a back pressure retaining valve in the primary liquid distribution main at the pumps' skid and connect the relief valve outlet back to the tank for liquid circulation. Also, provide an end of loop back pressure retaining valve to maintain supply pressure at the end of the loop where unused liquid circulates back to the tank.

      2) Main Distribution Header: For each liquid delivery pipe provide an isolation valve, high side pressure gauge, pressure relief valve, pressure regulating valve, low side pressure gauge, pressure relief valve, pressure transmitter and a pressure control venting valve, a final isolation valve. Pressure transmitter shall be interlocked with the pressure control venting valve to open the valve in the event

that line pressure reaches 125% of operating pressure. Set PRV to operate at 150% of operating pressure. Extend vent pipe outlet from the pressure control venting valve to an approved location or to an open stainless steel tank equipped with immersion heater for liquid containment and evaporation.

f. System Isolation: Provide primary isolation valve downstream from the delivery station, at pipe penetration into building and at pipe entry into building (on both sides of the wall).

g. Pressure Relief : Pressure relief valves provided in this system shall be sized for full pipe flow and shall be calibrated to operate at no more than 125% of liquid supply system operating pressure or as described in paragraph “19-4.3-A-7.e.2)” above. ***CAUTION*** shall be exercised in this application to avoid under sizing PRV’s, which might result in piping system rupture and failure.

8. Distribution Piping Venting: Liquid cryogen distribution piping system installed for the purpose of intermittent use, shall be provided with point of use phase separators, where cryogen gas would separate from the liquid and vented off to an approved system or location. Vent piping could be connected to a local exhaust system or it could be directed to outside the facility and equipped with a dedicated Chromalox pipe heater or equal to prevent ice build up on the vent pipe outlet.

B. Gaseous Cryogen Distribution Piping:

1. Pipe sizing: Size distribution piping to withstand overall pressure loss through the longest pipe run not to exceed 8% of the initial distribution pressure downstream from the pressure regulating delivery station.

2. Piping support: Provide pipe support and anchors at a frequency recommended by the pipe manufacturer. Refer to Attachment-6.0 Division-15078 Mechanical specifications for pipe supports and anchors.

3. Seismic Loops: Provide seismic expansion loops at pipe penetrations through building wall. Seismic loops shall be supported from wall structure in a manner to allow wall-anchored pipe and pad supported pipe to move freely during seismic activity. Seismic loop shall be sized to allow for peak-to-peak seismic amplitude for the seismic zone in the geographical area.

4. Cryogenic Gas Delivery Station: applies to gas distribution piping system downstream from vaporizers. Cryogenic gas distribution header shall be equipped with:

a. Pressure regulating: Provide a pressure regulator (pressure reducing valve) with inlet and outlet isolation valves and pressure indicating gauges and a normally closed manual bypass valve. Provide pressure relief valves upstream and downstream from pressure regulator. PRV discharge shall be directed away from personnel access and shall be pointed 45 degrees below horizontal. Refer to Attachment-4.3 Pressure Relief Valve Installation Detail.

b. Pressure monitoring: Provide a 4-20 mA pressure transducer at the inlet and outlet to the pressure regulators and connect signal wiring to the building management system for pressure monitoring purposes.

c. Flow Monitoring: Flow meters shall be capable of monitoring up to 90,000 SCFM.

1) Digital Monitoring: Provide a digital flow-metering device with a local flow totalizer controller equipped with an Ethernet port or with 4-20 mA output terminals to be connected to the building management system for monitoring purposes. Dyer TF Series or equal.

2) Mechanical Monitoring: Provide a mechanical acrylic flow meter.

d. Building management system shall be programmed to:

1) Initiate a local and remote warning signal - amber light when gas delivery line pressure changes by 15% above or below system operating pressure.

2) Initiate a local and remote audio/visual alarm signal - red light beacon with horn when gas delivery line pressure changes by 20% above or below system operating pressure, and initiate a notification signal to maintenance personnel. End user shall determine systems and components that should be shut down to avoid damage.

3) When system supply pressure exceeds 25% of preset system operating pressure, mechanical pressure relief valve shall activate to relief excess pressure from the delivery piping system. See Paragraph-f below.

4) For each specific installation, the end user shall:

a) Determine system operating pressure,

b) Pressure at which a warning signal is initiated,

c) Pressure at which an alarm signal is initiated,

d) Pressure at which PRV will be activated

e. System Isolation: Provide primary isolation valve downstream from the delivery station, at pipe penetration into building and at pipe entry into building (on both sides of the wall).

f. Pressure Relief: Pressure relief valves provided in this system shall be sized for full pipe flow and shall be calibrated to operate at no more than 125% of the gas supply system operating pressure. *** CAUTION *** shall be exercised in this application to avoid under sizing PRV's, which might result in piping system rupture and failure.

19-4.4 Tank Fill Station:

Tanker fill station shall consist of a tank fill port, a local monitoring and control panel and a dedicated local telephone. Where liquid cryogen tanks could be installed with direct truck access for tank refilling, a local fill station shall be provided with direct access for visual monitoring of tank level indicating gauge. Where liquid cryogen tank is installed in an area not accessible to delivery trucks, a remote fill station shall be provided with means of remotely monitoring tank level and both of top fill and bottom fill pipes' temperature as described herein and as shown on Attachment-4.9 Remote Tanker Fill Port Station Detail

A. Tank fill connection: shall be installed within close proximity from the cryogen storage tank and shall be:

1. Installed on a concrete slab or housekeeping pad sloped away from pipe support framing.

2. Of brass construction brazed to a copper fill pipe. Refer Attachment-4.2 Tanker Fill Port Installation Detail.

3. Welded to a 2" x 2" x 24" high stainless steel 304 tubular steel pedestal, which is welded to a 6" Lx 6" W x3/8" Thick base plate and is anchored to the concrete pad with a minimum of 4-each 3/8" x 4" wedge anchors with minimum 3" embedment. Fill connection-pedestal assembly shall be able to withstand physical abuse from hammers used to loosen up and tighten the end cap.

4. Provide two concrete filled bollards per Lockheed's Standards.

5. Equipped with a dual fill pipe manifold with isolation valves in each leg. One leg shall be connected to the top fill port and the second leg shall be connected to the bottom fill port.

6. Equipped with a pressure relief valve rated at 25% above the piping system operating pressure. Size PRV for full cryogen release flow to minimize the flow restriction and pipe damage.

7. Equipped with a drain valve facing down at least 4-feet away from fill area to allow fill pipe drainage towards a gravel filled Aluminum cylinder that is 24” diameter x 16” high. Locate cylinder several feet away from the hose connection port for personnel protection and secure to the pad. Depending on the installation, if safe venting is not practical provide a gravel filled pit at a safe location away from the fill port.
8. Fill piping for both of top and bottom fill ports shall be:
    a. Insulated with 3” foam insulation with flexible sealant to prevent moisture permeation into the annular space between insulation and fill pipe, and finished with a tightly sealed aluminum jacket, or insulated with vacuum jacketed rigid piping system as manufactured by Technifab, Chart, Vacuum Barrier Systems, quality Cryogenics, Tehcnifab insulated piping or equal. Refer to Attachment-6 Section-15078 Cryogenic Piping Systems
    b. Provided with thermal expansion loops with loop legs and sections sized to minimize structural stress on pipe segments during tank filling process.
    c. Supported by a galvanized steel or Unistrut support rack system rigidly anchored to concrete slabs, housekeeping pads, building walls, or overhead structures with lateral and longitudinal sway bracing to withstand seismic activity in the tank’s geographical area as established by local codes and ordinances. Lateral and longitudinal sway bracing shall at a minimum be provided at 20-foot on center and at each change in direction. When attached to building wall, expansion loop shall be supported by cantilevered steel framing fastened to the building wall. Insulated pipe anchor points and guides shall be provided with Pipe Shield insulating device.
    d. Anchored only at mid span of each long pipe segment while the remaining parts of the pipe run to be supported by steel rollers under a 20-gauge x 24” long stainless steel 304 shield, which shall be properly fastened to the bottom of the insulated pipe with ½” adjustable stainless steel straps. Pipe support rollers frequency shall be as established in the pipe support table in Refer to Attachment-6 Section-15078 Cryogenic Piping Systems. Swivel type pipe support rollers shall be provided to support offset pipe segment at each expansion loop. Swivel rollers are intended to allow pipe segment to rotate around the swivel axis during pipe contraction and expansion process.

B. Monitoring and Control Panel: shall be installed in a whether tight enclosure adjacent to the tanker fill port and shall include the following:
    1. Cryogen tank level indicator with (0% to 100%) fill level.
    2. Top fill pipe temperature indicator.
    3. Bottom fill pipe temperature indicator.
    4. Tank Pressure.

C. Telephone: Fill station shall be equipped with a dedicated telephone with direct connection to LMSSC security and facilities. Telephone enclosure shall be weather tight and equipped with a locking device.

D. Protective Equipment: Local and remote tank fill stations shall be provided with a permanently installed, dedicated storage cabinet equipped with cryogenic gloves, protective aprons and face shields. Truck driver and personnel responsible for refilling the cryogen storage tank shall be properly trained to execute this function and shall wear full protective gear prior to initiating the refilling process.

E. Tank Filling Hand Control Valves: that will be manually actuated by the delivery driver, including top fill valve, bottom fill valve and tank venting valve shall be clearly identified with a white paint to ensure that delivery driver does not actuate other valves that might result in

system shutdown. Fill pipe vent valve shall be identified with a red color.

19-4.5 Liquid Cryogen Dewar Fill Station:

A. Exterior Dewar Fill Stations

When required by facilities operation on site Liquid Cryogen Dewar fill station could be provided to allow local Dewar refilling and delivery to the end users at the point of use. When desired, liquid Cryogen Dewar fill station shall be designed to include the following components. Please refer to Attachment-2.4 Sample Liquid Cryogen Dewar Fill Station Design.

1. Liquid distribution: Cryogen liquid shall be delivered from a storage tank to the fill station by head pressure provided by the pressure building coil in the same manner as liquid cryogen distribution piping system. Dewar fill system shall consist of the following:

   a. Liquid Cryogen storage tank with head pressure building coil described above.

   b. Main distribution pipe header with a local pressure regulator to control liquid delivery pressure to the fill station. Supply pressure shall be set at no more than 100 psig.

   c. Main distribution piping manifold with multi Dewar fill stations as many as the project program requires.

      1) Liquid fill manifold shall be equipped with a local point of use isolation valve with a flexible stainless steel tubing to be connected to Dewars during the filling process. Isolation valve shall be equipped with a pressure relief port and a pressure relief valve to allow liquid nitrogen trapped in the valve assembly to escape when it evaporates.

      2) If required by Lockheed the fill station could also be equipped with a 2” fill pipe tank connection to allow filling tank trucks up to 1,000 gallon fill capacity to be used to transport liquid nitrogen to other smaller tanks.

   d. Pressure Relief Valve (PRV): each piping section in the dewar fill station, that could be isolated by two valves where liquid cryogen could be trapped, must be equipped with a PRV to allow evaporated gas to escape when gas pressure builds up above PRV set point. PRV’s installed in the fill manifold and in each fill port isolation valve shall be extended up through the canopy described below with the valve pointing in the direction opposite to the operator’s access area at a 45 degree angle below horizontal.

   e. Piping Insulation: Liquid Cryogen fill piping and distribution manifold shall be insulated with 3” diameter foam insulation tightly sealed around the edges with the pipe. Cap foam insulation with an aluminum jacket. Use screws or pop rivets to attach overlapped aluminum sheet then seal with a flexible silicone caulk to prevent moisture permeation through the seam.

B. Interior Dewar Fill Stations

When required by facilities operation interior Liquid Cryogen Dewar fill station could be provided to allow local Dewar refilling and delivery to the end users at the point of use. When desired, liquid Cryogen Dewar fill station shall be designed to include the following components.

1. Point of use isolation ball valve.
2. Pressure relief valve
3. Inlet pressure gauge
4. Pressure regulating valve
5. Pressure relief valve

6. Stainless steel braided flexible tubing with CGA end connection compatible with Dewar fill port.
7. ¼" thick aluminum diamond plate under the Dewar(s) to protect flooring.
8. Local exhaust port to evacuate nitrogen gas, vented from the Dewar during the filling process, to an approved location.
9. Local Oxygen sensor and controller with a local and remote audio/visual annunciation. Oxygen monitoring controller shall be connected to the building management system, which shall initiate local and remote warning and alarm signals should oxygen level drops below set points predetermined by Lockheed ES&H Standards.

19-4.6 Safety Considerations:

A. When designing an inert Cryogen Distribution Piping System care must be taken to:

1. Ensure that system design is in full compliance with Lockheed's ES&H Standards.
2. Provide PRV's in each pipe segment that could be isolated from the remainder of the system using Hand Control Valves (HCV) or automatic control valves and could trap liquid cryogen and downstream from pressure control or regulating valves to protect system from over pressure in the event a pressure regulator failure. PRV's shall be rated at 150% of system delivery pressure with a pressure relief set point not to exceed 125% of distribution system operating pressure. Refer to Attachment-10.9 Sample Pressure Relief Valve Cut Sheet.
3. Design pipe racks with bottom of support steel not less than 84" above any walkway, pad, catwalk or any area where head injury may occur. Pipe racks and supports shall be designed and engineered to meet vertical, lateral and longitudinal load and shall meet seismic restraint and bracing to meet local Building Code guidelines.
4. Layout fill station, tanks, vaporizers and control panels with sufficient space between adjacent equipment and between equipment and adjacent walls to ensure a safe path of travel and a proper access for maintenance purposes.
5. Locate weather tight disconnect switch no more than 5-feet away from motor. Disconnect switches shall be NEMA 3R or 4X.
6. Liquid cryogen pad shall be kept clean and tidy and shall be designed and built in a manner to minimize the collection of water and algae growth, which could become a slip hazard.
7. Delivery truck drivers shall be properly trained to properly fill tank, and shall wear protective gear – face shield, apron, and cryogenic gloves prior to starting the filling process.
8. Ventilation: Ensure that liquid cryogen pad has sufficient natural ventilation. Physical obstruction or barriers that could obstruct air movement shall be avoided.
9. Lighting: provide adequate exterior lighting on cryogenic pad to ensure that deliver driver and maintenance personnel are able to conduct their normal duties.

19-5 ELECTRICAL, LIFE SAFETY AND SECURITY

19-5.1 Electrical Power Distribution:

A. Design shall include electric circuits described herein:

1. 120-volt, 1-phase, 3-wire circuit to support:
   a. Tank level, pressure monitoring system and auxiliary power outlets. Tank monitoring system shall be equipped with a 20-minute Un-interruptible Power Supply (UPS).

b. Auxiliary propeller fan to assist with vaporizer function.

c. Oxygen Monitoring System with a 20-minute Un-interruptible Power Supply (UPS).

d. Flow meter totalizer.

2. 208-volt, 1-phase or 3-phase, circuit to support forced draft vaporizers when necessary.

19-5.2 Lighting:

A. Adequate lighting shall be provided at the fill station and on the cryogenic pad for after dark service access and deliveries. Design shall include lighting circuits and fixtures described herein:

1. Light fixture at remote tank fill station or at local tank fill station to allow tank refilling in the dark. Place wall light fixture at 14' above grade.

2. Wall mounted light fixture with 30-foot-candle lighting intensity on cryogenic pad to allow tank and piping maintenance in the dark.

19-5.3 Monitoring for Oxygen Deficiency:

A. Provide Oxygen monitoring system at enclosed cryogen pad and at interior liquid cryogen fill stations as outlined herein:

1. Cryogen pad area shall be continuously monitored by an atmosphere monitoring system.

2. Monitoring system shall be designed, installed and commissioned per Lockheed's Section-18 "OXYGEN-DEFICIENT ATMOSPHERE DESIGN STANDARD".

3. Monitoring system shall provide an audible and visual alarm when oxygen level drops to 19.5%. Alarm shall be located within the pad area. An alarm signal shall also be initiated at the active building management system and the Access Control And Alarm System" (ACAS).

19-5.4 Data Communications:

A. Provide data communication support services as outlined herein:

1. Provide a dedicated telephone line for telemetry connection to the tank level and pressure monitoring system.

2. Provide a dedicated data line from tank monitoring system to the building management system. Building management system shall be programmed to monitor tank level in percent full and tank pressure.

3. Each cryogenic system shall be connected to the active building management system and the Access Control And Alarm System" (ACAS).

19-5.5 Security:

A. Cryogenic pad shall be provided with:

1. Security fence with access doors or gates equipped with panic hardware for emergency exiting;

2. Sufficient lighting for safety and security purposes;

3. Electric power circuit for telemetry unit support and auxiliary GFI electrical duplex for maintenance purposes;

4. Dedicated Telephone with direct connection to LMSSC security and facilities department responsible for tank maintenance and filling;

5. Dedicated data line to be connected to the facility Building Management System.

6. Provide local security cameras at the tank fill and on the cryogenic pad.

19-6 PHYSICAL PROTECTION

19-6.1 Safety Bollards:

A. Where cryogen pad is exposed to vehicular traffic, provide concrete filled steel bollard around tank fill port and around liquid cryogen storage tanks per Lockheed's Standards.

19-7 ENVIRONMENT

A. Cryogenic Pad Acceptable Locations

1. Cryogenic pads shall be built in areas unobstructed by trees, buildings or structures. Where possible, pads shall be installed due East, South or West exposure. If impractical, pads may be installed facing North exposure but with maximum possible ventilation to ensure proper vaporizer operation and optimum gas generation.
2. Cryogenic pads shall be sloped at a minimum 1/8" per linear foot. Where necessary, Cryogenic pads shall be equipped with local trenches, sump and pump to transfer condensing water to an approved waste receiving system. If necessary provide a V-Groove in the center of the concrete pad to allow condensed water to drain away from the pad.
3. Provide 1-1/2" high fiberglass grating on cryogenic pad around tanks and vaporizers for personnel walkways to minimize potential fall due to slippery conditions.

B. Cryogenic Tank Venting

1. Pressurized cryogenic tanks' vent and pressure relief piping shall terminate at a location and elevation approved by Lockheed's ES&H department. Vent pipe outlets shall be directed away from adjacent piping, pipe support racks, electrical conduits and outlets, control panels, instruments, tanks and pumps.
2. Gravity cryogenic tanks' with liquid cryogen circulation shall have vent pipe outlet:
   a. Terminate into a dedicated vaporizer sized with minimum back pressure to enhance heat transfer and avoid icing up vent pipe discharge outlet, or
   b. Terminate with a dedicated Chromalox or equal pipe heater and a UL listed controller to ensure that vent pipe outlet does not ice up. Temperature controller shall be programmed to activate the pipe heater when holding tank (reservoir) temperature reaches 32 Deg. Fahrenheit. Heater activation temperature shall be programmable and shall be determined by the end user during system start up and commissioning. Pipe heater shall be sized to ensure complete evaporation of worst-case liquid cryogen discharge through vent pipe.

C. Liquid Cryogenic Distribution Piping System Venting

1. Liquid cryogen vent pipe shall be extended to a temporary liquid cryogen capture reservoir (tank) equipped with a CALROD or equal immersion heater and a UL listed controller. Tank shall be equipped with a temperature sensor interlocked with the heater. Temperature controller shall be programmed to activate the heater when holding tank temperature reaches -320 Deg. Fahrenheit. Heater activation temperature shall be programmable and shall be determined by the end user during system start up and commissioning. Immersion heater shall be sized to ensure complete evaporation of worst-case liquid cryogen discharge volume.

D. Process Venting

1. Process liquid cryogen vent piping shall terminate into a cryogenic vent and location to be approved by Lockheed's ES&H department.
2. Liquid cryogen vent pipe shall be extended to a temporary liquid cryogen capture

reservoir (tank) equipped with a CALROD or equal immersion heater and a UL listed controller. Tank shall be equipped with a temperature sensor interlocked with the heater. Temperature controller shall be programmed to activate the heater when holding tank temperature reaches -320 Deg. Fahrenheit. Heater activation temperature shall be programmable and shall be determined by the end user during system start up and commissioning. Immersion heater shall be sized to ensure complete evaporation of worst-case liquid cryogen discharge volume.

E.

F. Cryogenic Pad Material of Construction

1. Cryogenic tanks, vaporizer and delivery stations shall be installed on thickened concrete pads designed to support equipment to withstand seismic activity as prescribed by the latest Building Codes.

19-8 WARNING SIGNS

Provide warning signs on the cryogenic pad as described below. Signs shall be fabricated and located per NFPA 55 and 2007 California Fire Code.

A. NFPA placard signs, shall be posted with the hazard classification numbers appropriately marked on each diamond for “Health Number-4”, “Fire Number-0”, “Corrosivity Number-0” and “Special Hazard Number-0”.

   1. One sign shall be posted on the security gate into the cryogenic pad area,

   2. One sign to be posted on cryogen storage tank.

B. A sign stating:

WARNING
SECURED AREA
DO NOT ENTER

C. A sign stating

WARNING – (Name of Gas)
HIGH CONCENTRATIN OF GAS CAN OCCUR IN THIS AREA
AND CAN CAUSE ASPHYXIATION.
VERIFY THAT OXYGEN CONCENTRATION IS ABOVE 19.5%
BEFORE ENTERING AND DURING ACTIVITY IN THIS AREA.

D. A sign stating

NO SMOKING
WITHIN 25 FEET

E. The emergency exiting path of travel shall be hatched with distinctive yellow stripes marked in the direction of egress stating with:

EMERGENCY EXIST PATH OF TRAVEL
DO NOT OBSTRUCT

19-9 MAINTENANCE

19-9.1 Liquid Cryogen Storage Tank:

A. Conduct annual inspection and maintenance of the following tank components to ensure a continuous safe and reliable operation. Inspection and maintenance activities shall be executed during system shutdown for personnel safety.

1. Fill Station:
   a. Visually inspect fill port connection for cracking due to physical abuse by hammering the cap for removal and reinstallation during normal fill process. Replace fill connection if cracked or bent or if the pipe threads are deformed.
   b. Visually inspect coupling weld to support plate, as well as pedestal weld to top plate and to base plate to ensure weld integrity. Repair cracked welds or replace entire pedestal if necessary.
   c. Inspect bottom and top fill pipes temperature sensor and calibrate annually. Verify that temperature sensors' readouts indicate actual values. Calibrate device annually.
   d. Remote Fill Station Control Panel:
      1) Conduct a functionality test on control panel and make sure that warning and alarm signals function properly and pilot lights turn on and off as needed.
      2) Verify that tank level indicating device indicates actual value and calibrate.
2. Rupture Disc: Inspect rupture disc for signs of deformation or physical obstruction. Repair ore replace if necessary. Remove all physical obstruction from the vicinity that could impede the flow of gas in an emergency release.
3. Pressure Building Coil:
   a. Inspect coil for leaks or signs of cracking due to aging. Repair or replace as needed.
   b. Periodically wash down coil to ensure cleanliness which would enhance heat exchange and coil functionality.
4. Hand Control Valves (None Vacuum Jacketed):
   a. Inspect hand control valves for visible leaks. Repair or replace as necessary
   b. Cycle valves to ensure reliable operation. Repair or replace faulty valves
5. Hand Control Valves (Vacuum Jacketed):
   a. Inspect hand control valves for icing. If ice builds up on VJ valves, it is a sign of a vacuum in the valve assembly. Notify system supplier to repair leak or replace valve as necessary.
   b. Cycle valves to ensure reliable operation. Repair or replace faulty valves as necessary
6. Level Indicator: Inspect level indicator for accuracy and Calibrate.
7. Tank level and pressure monitoring system:
   a. Inspect monitoring system devices to ensure reliable readouts.
   b. Inspect pressure transducer and calibrate annually.

8. Flow Meters:
   a. Inspect for physical abuse and replace faulty parts.
   b. Inspect readouts and calibrate.
   c. Verify proper 4-20 mA output signal to building management system.
9. Pressure Regulators: Cycle pressure regulator to ensure proper output pressure. Repair or replace as needed.
10. Pressure Transducers: Inspect to ensure proper 4-20 mA signal output and calibrate. Replace if needed.
11. Pressure Indicators (Gauges): Inspect pressure gauges for proper readout. Close inlet valve to isolate pressure gauge, then remove to zero needle. Replace pressure gauge if needle is pegged.
12. Pressure Relief Valves: Inspect PRV's for physical abuse. Replace as needed. Remove an obstruction or debris that might affect PRV's functionality. Verify that PRV's discharge away from personnel access. Adjust as needed.

19-9.2 Liquid Cryogen Distribution Pumps:

A. Follow LMSSC preventive maintenance guidelines already in place for pump maintenance.

END OF DESIGN STANDARD

ATTACHMENTS

Attachments shall serve as an immediate guide to design engineers and installers to ensure consistency in product selection.

Attachment-1.0 Sample Cryogenic Pad Site Plan
- 1.1 Sample Inert Cryogenic Pad Site Plan
- 1.2 Sample Flammable Cryogenic Pad Site Plan
- 1.3 Sample Oxidizer Cryogenic Pad Site Plan

Attachment-2.0 Sample Cryogenic Pad Equipment Layout
- 2.1 Sample Cryogenic Pad Equipment Layout w/ chain link fence - Gas Generation and Distribution
- 2.2 Sample Cryogenic Pad Equipment Layout w/ concrete block wall - Gas Generation and Distribution
- 2.3 Sample Cryogenic Pad Equipment Layout Liquid Distribution & Gas Generation and Distribution
- 2.4 Sample Exterior Cryogenic Liquid Dewar Fill Station Design

Attachment-3.0 Sample Process & Instrumentation Diagrams
- 3.1 Sample Cryogenic System Process & Instrumentation Diagram Gas Generation and Distribution
- 3.2 Sample Cryogenic System Process & Instrumentation Diagram Liquid Distribution and Gaseous Generation and Distribution-1
- 3.3 Sample Cryogenic System Process & Instrumentation Diagram Liquid Distribution and Gaseous Generation and Distribution-2

Attachment-4.0 Construction Details
- 4.1 Remote Fill Station Installation Detail
- 4.2 Tanker Fill Port Installation Detail
- 4.3 Pressure Relief Valve Installation Detail
- 4.4 Expansion Loop Anchoring Detail
- 4.5 Thermal Expansion Loop Anchoring Detail
- 4.6 Seismic Expansion Loop Detail
- 4.7 Pipe Support on Wall or Floor Detail
- 4.8 Gaseous Cryogen Delivery Station

Attachment-5.0 *Not Used. Reserved for future use*

Attachment-6.0 Division-15078 Cryogenic Piping Systems

Attachment-7.0 Sample Equipment Cut Sheets
- 7.1 Sample Cryogen Tank Cut Sheet
- 7.2 Air Vaporizers
  - 7.2.1 Sample Free Convection Vaporizer Cut Sheet
  - 7.2.2 Sample Forced Draft Vaporizer Cut Sheet
- 7.3 Steam Vaporizers
  - 7.3.1 Sample Water Bath Steam Vaporizer Cut Sheet
  - 7.3.2 Sample Steam Shell and Tube Vaporizer Cut Sheet

END OF ATTACHMENTS SECTION

SECTION 20
FACILITY MAINTENANCE ALARM SYSTEM DESIGN STANDARDS

20.1 GENERAL

20.1.1 Summary

A. This section provides guidelines for the design of Facility Maintenance Alarm Systems (FMAS) installations. The FMAS monitors the condition of equipment, process environments, incoming utilities and other critical facility conditions for early pre-failure warnings, failures and deviations from required values so that Facility Maintenance or using group can respond to correct the condition.

B. FMAS monitoring is mandatory for certain installations and as needed for others as described in this section.

C. The requirements for design and installation are the responsibility of the Facility Technical Maintenance FMAS Group, who should be consulted for additional information, clarification, and interpretation of these requirements.

D. Internal procedure for initiating FMAS request

1. When the need for an FMAS installation is identified, the LMS Project Manager or Project Engineer shall determine the appropriate user alarm contacts and provide that information to the Facility Technical Maintenance FMAS Group.

2. The FMAS alarm contact form is on the Sunnyvale FOS web site.

3. The LMS Project Manager shall provide the Facility Technical Maintenance FMAS Group with the project account charge number for setup, support, design reviews and FPA's associated with the FMAS alarm installation. The FMAS Group will then support the design and installation of the system. Estimated time is four hours for the first alarm point and one hour per point thereafter.

E. The responsible organization for determining security requirements for FMAS design is LMS Technical Security organization. For specific secure FMAS design standards, refer to Section 6, Security Design Standards.

20.1.2 Related Sections

A. Additional requirements for maintainability, appearance and other issues are set forth in the General Design Standards and apply to the work of this section.

B. Specific products and installation are specified in the Construction Specifications Section 28 46 20 Facilities Maintenance Alarm System.

C. Requirements for Building Automation Systems (BAS) are contained in Design Standard Section 16, Building Controls.

20.1.3 Standard Interface Panel Drawings

V4-54-2	FMAS Warning Tape
V4-301	FMAS Temperature, Humidity & Pressure
V4-302	FMAS Temperature Alarm
V4-303	FMAS Liquid/Fault Detection
V4-304	FMAS Liquid Detection Installation Details
V4-305	FMAS ATS Power Monitor
V4-306	FMAS Low Air/Liquid Pressure
V4-307	FMAS Warrick/Generator Monitoring Details
V4-308	FMAS Remote Alarm Override
V4-309	FMAS Dual Monitor Panel for Outside Use
V4-310	FMAS Temperature and Float Alarm
V4-311	FMAS Small Transmitter and/or Distribution
V4-312	FMAS Large Transmitter and/or Distribution
V4-313	FMAS 4 channel Remote/Local Alarm Indicator
V4-314	FMAS 16 Trunk Channel Generator
V4-315	FMAS Remote Node (8-CH)
V4-316	FMAS Isolation Repeaters
V4-317	FMAS Complex System Monitor
V4-318	FMAS Remote Headend
V4-319	FMAS System Heartbeat and Loop Identifier
V4-320	FMAS Temperature Alarm with Disable
V4-321	FMAS 16 Channel Optical Fiber Transmitter
V4-322	FMAS 16 Channel Optical Fiber Receiver
V4-323	FMAS Remote RF Link
V4-324	FMAS Remote Buzzer and Display Option
V4-325	FMAS Vibration Monitor
V4-326	FMAS Universal Digital Interface
V4-399	FMAS Device ID Label

20.1.4 Description

A. The FMAS is monitored by the Maintenance Dispatch during working hours and by the Security Dispatch after business hours.

B. Monitoring devices are installed by the contractor at locations to be monitored. Local interface panel to be fabricated and installed by the contractor. Contractor to install power and signal conduits and cable to specified location. All FMAS trunk terminations are made by Maintenance FMAS Group technicians.

C. The FMAS trunk cable is located in the building Integrated Wiring Center (IWC) or other suitable location. Locations of existing trunk cable terminations can be verified by the FMAS Group

D. New buildings and additions require trunk cable terminations to be located in an IWC Room. Refer to Section 9 Telecommunications Design Standards for location of required equipment in IWC Rooms. The purchasing and installation of this equipment shall be determined on a project-by-project basis by the FMAS Group.

E. All FMAS inputs are fail-safe or closed circuit. This requires any external contacts to be closed in the normal condition preferably using an energized relay. This ensures that a

loss of power to the system being monitored will also generate an alarm condition on the FMAS.

20.1.4 Mandatory FMAS Monitoring Locations

A. The need for FMAS monitoring must be determined for every project during development of project requirements and as critical equipment and locations are identified during design. FMAS monitoring is always required for the following applications:

Interface Panel	Application	Sensor Type	Sensor Placement
V4-301	Clean rooms.	Sensors for Temperature Humidity and Differential Pressure	Within 6 ft. of BAS primary temperature and humidity sensor located on V4-301 panel. Differential Pressure is measured across the HEPA filters.
V4-302 or V4-310	Server rooms	Temperature and Condensate Full Float	Within 2 ft. of BAS primary temperature sensor
V4-302	Product storage refrigerators	Temperature	As close as possible to refrigerator control sensor. Interface with defrost cycle.
V4-320	Product freezers or other systems that routinely go into alarm requiring an alarm time out.	Temperature	Near main control sensor if possible
V4-302	HVAC chiller and boiler water	Temperature	In wells on return piping within 6 ft. of BAS primary return sensor
V4-303 V4-304	Under computer room raised flooring where liquid hazards exist.	Liquid sensing cable system	Per direction of FMAS Group
V4-303 V4-304	Air handlers and fan houses located above clean rooms or flight hardware assembly areas	Liquid sensing cable system and liquid level sensors	Per direction of FMAS Group
V4-303 V4-304	Equipment rooms, including boiler and chiller rooms, which are located above useable space	Liquid sensing cable system and liquid level sensors	Per direction of FMAS Group
V4-305	Transfer switches and building Emergency generators	Switch contacts from ATS, Generator and Pneumercator	Per Generator Specification Section 26 32 13
V4-306	House compressed air supply tanks.	Pressure	Within 2 ft. of BAS primary differential pressure sensor
V4-306	Chilled/Hot water Supply Loop Pressure	Pressure	Within 2 ft. of BAS primary steam pressure sensor
V4-306	Steam piping systems	Pressure	On main house vacuum storage tank

V4-306	House vacuum	Pressure	On main house vacuum storage tank
V4-311	Oxygen Deficiency areas	Percent O2 OEM Contacts	Per Design Standards Section 20 Oxygen-Deficient Atmosphere Standard
V4-311	Hydrogen Detection	Concentration H2	Per Electrical Design Standard Section 5
V4-311	Refrigeration machinery rooms	Refrigerant detector OEM Contacts	Per HVAC Specification Section 23 00 00 and ESH direction
V4-311	HAZMAT pipes, sumps, tanks	Leak detector	Per Environmental Safety & Health direction
V4-305 V4-311	Emergency generator fuel storage tanks and piping	Leak detector Low fuel level	Per Generator Specification Section 26 32 13
V4-311	HVAC pump status	Motor Current	NAND with Pump Control Relay
V4-311	Critical Uninterruptable Power Supplies, UPS	Switch closure contacts for loss of AC line supply power and unit fault conditions	Per direction of Facility Engineering and FMAS Group
V4-317	Chiller/Boiler plant chilled and hot water temperature and secondary loop pressure	Temperature and pressure	Near BAS sensors
V4-323	Remote off-grid systems such as pumping stations	Determined by system being monitored	Per direction of Facility Engineering and FMAS Group
V4-324	Remote alarm and display for notification external to closed area monitor.	Option for V4-302, V4-309, V4-310, V4-320	Per direction of Facility Engineering and FMAS Group
V4-325	Critical rotating equipment that requires maintenance	Battery powered vibration and temperature RF transmitters	Per direction of Facility Engineering and FMAS Group
V4-326	To monitor control signal voltages where floating dry contacts are not available	Power indicator lamps or control voltages	Per direction of Facility Engineering and FMAS Group

20.1.5 Project Specific FMAS Monitoring Locations

A. Consult with project stakeholders to determine additional monitoring requirements for critical equipment and processes not indicated in table above.

20.2 DESIGN

20.2.1 Codes and Standard

A. Local Municipal Codes

B. Occupational Safety and Health Administration (OSHA)

C. National Fire Protection Association Standards (NFPA)

D. National Electrical Code (NEC)

E. Commercial Building Telecommunication Wiring Standard (EIA/TIA 568)

20.2.2 General Requirements

A. All FMAS equipment supporting or monitoring Generators, UPS systems, O2 Monitors, and other personnel safety monitoring equipment must be supplied by a 120VAC emergency power circuit. All other FMAS panels can be connected to normal power if emergency power is not easily available.

B. Electrical components and installation shall be as specified in the Construction Specifications Section 28 46 20 Facilities Maintenance Alarm System.

C. FMAS and sensor cabling not in within conduit shall be routed at least 6 inches or more from all electric motors, transformers, switchgear, and other electrical equipment that generate high levels of EMI that could affect alarm signals.

20.2.3 APPLICATIONS

A. The following articles provide additional information for specific required monitoring locations listed in the table above. Not all required applications listed in the tables are included.

20.2.3.1 Liquid Intrusion

A. Liquid intrusion constitutes a hazard to products and critical operations. Areas with equipment that contains liquid located above or near clean rooms critical assembly areas, including areas containing critical infrastructure, shall be provided with leak detection as part of the original installation and when the area is being modified. For example: air handlers and fan houses.

B. Elevated equipment rooms with equipment containing liquid or which house liquid piping are also liquid intrusion hazards to spaces below. Liquid detection shall be provided in these equipment rooms whenever an area below the room is being developed or when modifications are being made to the equipment rooms.

C. Liquid detection shall also be provided in raised floor areas that house liquid containing mechanical equipment.

20.2.3.2 Temperature

A. Provide high or low temperature alarm for the following applications:

1. Product storage areas where established temperature parameters must be maintained to ensure specification compliance. Examples include product storage refrigerators and freezers. In these applications, FMAS alarm is required so as to provide early indication of temperature anomaly. A timer is provided to disable the alarm during the defrost cycle, but the freezer controls must provide a defrost contact closure.

2. Computer server rooms where a loss of temperature control could damage computer data systems.

3. IWC rooms where a loss of temperature control could damage equipment.

4. HVAC boiler and chiller return water temperature.

20.2.3.3 Pressure

A. Provide low pressure alarm for compressed air systems where a loss of pressure could cause facility or process interruptions.

B. Provide alarm for house vacuum supply where a loss of vacuum could cause facility or process interruptions.

C. Provide low steam supply pressure alarm for humidity-controlled areas supplied with a pressurized steam supply boiler.

D. Provide low and high supply pressure alarm at system header of hot water and chilled water systems.

20.2.3.4 Refrigerant Leak Detection

A. Provide detection and alarm of refrigerant spill in chiller mechanical rooms where code requires such systems.

20.2.3.5 Liquid Level Detection

A. At emergency generator fuel storage tanks, piping, per Generator Specification Section 26 32 13

1. Leak detection at fuel storage tanks and piping

2. Provide low fuel level indication.

B. Provide leak detection at HAZMAT pipes, sumps and tanks per Environmental Safety and Health direction.

20.2.3.5 Clean Room Pressure, Temperature, and Humidity

A. Provide temperature, humidity and pressure limit alarms for clean rooms used for hardware assembly where operating limits must be maintained. Be aware that the pressure alarm needs to be disabled when large doors are opened to adjoining areas.

B. The air conditioning/heating units shall maintain the room temperature and relative humidity to comply with MAP 211026 Cleanroom Process Control (Temperature = 62 - 77°F, Relative Humidity = 20% to 60%) or Program Engineering requirements, whichever is more stringent. It is recommended that the temperature rate of change not exceed 5°F per hour in order to minimize the chances of condensation.

C. Cleanrooms and enclosed clean zones shall maintain positive pressure with respect to the ambient environment (i.e., change area, airlocks, or other outer areas). When there are multiple or nested cleanrooms, positive pressure shall be maintained in cascading order of cleanliness (cleaner environments have positive pressure with respect to lower cleanliness areas). The facility shall be designed to meet a minimum positive pressure requirement of 0.05 inches of water. If area pressure is below 0.01 inches of water, then monitor the differential pressure across the HEPA filters.

D. Routine verification to check the accuracy of the sensors requires attaching an identification placard to the outside of the FMAS panel. Use detail V4-399 to create this device identification label.

20.2.3.6 Emergency Power Monitoring

A. Provide power monitoring of emergency electrical generator operation per Generator Specification Section 26 32 13.

B. Monitor the condition of the generator to ensure that it will provide electricity in the event of a power outage and that the monitoring systems are powered and online. If for any reason the generator is not in a normal operating condition, ready to start and provide power to a load, a normally closed pair of contacts will be opened to signal the FMAS that a fault condition exists. This will include but is not limited to the following: A tripped output breaker or E-Stop, battery charging system is off-line, starting batteries are disconnected or discharged, low coolant level, loss of power to control electronics or generator commanded to stop (not in run condition).

20.2.3.7 Oxygen Deficiency Monitoring

A. Provide oxygen monitors in Oxygen Deficiency areas where required per Design Standard Section 18 Oxygen-Deficient Atmosphere.

20.2.3.8 Uninterruptable Power Supplies (UPS)

A. Monitor critical UPS units for a summary of all fault signals except battery replacement date overdue.

B. Provide hydrogen detection for large battery banks in spaces that are not well ventilated

C. Some UPS devices do not supply an Isolated normally closed energized relay contact for the summary alarm. In that case an external relay to reverse the alarm logic will be added.

D. Sometimes another alarm system other than the FMAS needs to monitor the UPS. This case requires a relay socket assemble such as the Tyco 1776632-1 or 1776636-1 to provide separate relay contacts to each customer.

END OF SECTION

SECTION 21
LANDSCAPE DESIGN STANDARDS

21.1 GENERAL

21.1.1 Summary

A. These standards are intended to provide assistance and direction when undertaking landscaping and planting projects and refreshing existing landscape areas in the Lockheed Martin Space Systems Company, Sunnyvale Campus. These standards include a list of recommended plants, standard planting details, basic landscaping considerations and references to the LMSSC Standard Specifications. Additional information has been provided to assist designers, landscapers and LMSSC personnel locate relevant municipal landscape codes and regional landscaping requirements.

21.1.2 General Landscaping Guidelines

A. These standards shall apply to all new landscaping projects beyond maintenance of existing landscapes in the LMSSC, Sunnyvale Campus.

B. Landscaping projects shall be separated into three categories; Maintenance, Minor Landscape Projects and Significant Landscape Projects. LMSSC personnel, contractors and designers should consult these standards prior to initiating any landscape project to determine into which category their project will fall.

21.1.3 Maintenance

A. Landscape maintenance shall be provided by qualified and insured landscape maintenance contractors. Landscape maintenance may include all of the following:

1. Mowing
2. Trimming
3. Pruning
4. Weeding
5. Raking
6. Cleaning
7. Fertilizing
8. Pest control
9. Trash cleanup
10. Refreshing mulches
11. Replanting dead or damaged plants
12. Irrigation tuning and minor repairs and replacements to existing irrigation systems

21.1.4 Minor Landscape Projects

A. A California licensed C-27 Landscape Contractor may provide the design and installation of small landscape areas when the proposed area meets all of the following criteria approved by LMSSC personnel:

1. The overall project area is less than 2500 square feet
2. There are minimal changes to grades and no changes to the existing drainage systems

3. The proposed irrigation system can be connected to an existing irrigation mainline and irrigation control system
4. Existing paving, walls, curbs and structures are not being removed or modified
5. New paving, walls, curbs and structures are not being constructed
6. LMSSC personnel have verified that the project is a Minor Landscape Project that does not require the services of a Landscape Architect

21.1.5 Significant Landscape Projects

A. A California licensed Landscape Architect with commercial and public project experience shall be required for the design of all landscape projects that include any of the following criteria:

1. The overall project area is greater than 2500 square feet
2. There are significant changes to existing grades
3. There are modifications to existing drainage systems or construction of new drainage systems
4. Landscaping requires design of new irrigation mainlines, or zones with new controllers or hydrozones
5. There are modifications to existing or construction of new paving, walls, curbs or structures
6. LMSSC personnel request the services of a Landscape Architect

21.2 DESIGN SERVICES

21.2.1 General

A. A California licensed C-27 Landscape Contractor shall be required for installation of all planting, irrigation and landscape improvements designed by the Landscape Architect.

B. Prior to proceeding with a landscape project, LMSSC personnel and the Landscape Architect should consult the LMSSC LANDSCAPE PROJECT INITIATION CHECKLIST to identify project scope, design elements and consulting disciplines.

21.2.4 Design Deliverables

A. Develop scope of work and design schedules to include submittals of designs and meetings with LMSSC personnel to review documents at the following minimum milestones:

1. Basis of Design (BOD)
2. 30% Schematic & Conceptual Plans
3. 60% Construction Drawings and Specifications
4. 90% Construction Drawings and Specifications
5. Final Bid Documents

21.2.5 Design Priorities and Sustainable Design

A. Develop design concepts that adhere to the following criteria:

1. Identify the project area's microclimates and design to their opportunities and constraints
2. Use hardy, regionally native, adapted and drought resistant plants
3. Exclude and remove invasive and noxious weed species
4. Minimize negative impact to natural habitat
5. Identify opportunities for creating additional natural habitat
6. Maximize low-maintenance vegetation and landscape elements
7. Utilize efficient irrigation methods
8. Screen undesirable views
9. Minimize or avoid use of pesticides, herbicides, and fertilizers
10. Provide water budgeting
11. Create an attractive site within the context of a contemporary corporate campus

21.3 DESIGN REQUIREMENTS

21.3.1 General

A. Refer to figure 2 for a map of the microclimates on the Sunnyvale campus. A list of acceptable plants for each microclimate is included at the end of this document. Refer to figures 2 through 4 for planting concepts for each microclimate

21.3.2 Sun and Shade Microclimates

A. Four microclimate conditions have been identified with general standards for the selection and installation of standard trees and plants in the LMSSC, Sunnyvale Campus. Other microclimatic factors such as wind and slope aspect can affect the plants and should be considered when selecting plants.

1. Full Sun - Plants in full sun conditions will be exposed to direct sunlight for at least 6 hours per day. Shade breaks are brief and the slope aspect is to the south, east and west.

2. Reflective Heat - Plants in reflected heat will be exposed to full sun for more than 4 hours with heat radiating from buildings, windows, paving or gravel. Areas with greater reflected heat gain are typically found on the southern sides of structures with small planters surrounded by concrete or asphalt.

3. Partial Shade - Plants in partial shade will have breaks from the afternoon sun and heat for several hours. Trees, taller shrubs and buildings may provide shade breaks and plants under trees with thin canopies may receive dappled light all day long.

4. Full Shade - Plants in full shade receive less than 2 hours of direct sunlight and no direct sunlight in the afternoon hours. Buildings over one story and groups of larger evergreen trees may create full shade conditions on the north, northeast and northwest sides.

B. Planting should also consider shade patterns as seasons change. Shade patterns will change and shadows will be longer in the winter. Plants under deciduous trees and tall

shrubs must be able to tolerate the direct sunlight while deciduous tree canopies are bare.

21.3.3 Street Trees

A. Primary streets are defined as Lockheed Martin Way, 1st Avenue, J Street and the southern portion of Mary Road. Typical tree spacing on primary streets should be no less than 30 feet and no greater than 50 feet on center with equal spacing where roads, structures and utilities allow. Make reasonable effort to evenly space street trees. Primary Street Trees can be found in the recommended list of plants.

B. Secondary streets will include all non-primary streets. Typical tree spacing on secondary streets should be not less than 30 feet and no greater than 50 on center with equal spacing where roads, structures and utilities allow. Secondary Street Trees can be found in the recommended list of plants.

C. Accent Street Trees should be used at intersections, corners and pullouts and driveways. Accent trees should be spaced no less than 15 feet and no greater than 30 feet on center. Accent Street Trees can be found in the recommended list of plants.

21.3.4 Parking Lot Trees

A. Trees in parking lots should adhere to the City of Sunnyvale Design Standards for parking lot design and shading requirements. Certain street routes and parking lots within the LMSSC, Sunnyvale Campus are also utilized for project transport, testing and staging. Confirm and coordinate parking and street tree plantings to insure that testing, staging, storing and transporting of project equipment is not affected. Parking Lot Trees can be found in the recommended list of plants.

B. Design and installation of parking lot trees should space planters and tree species such that they meet the City of Sunnyvale requirement of 50% shade after 15 years of tree establishment. The estimated height and spread of the recommended trees can be found in the recommended list of plants. Utilize the smaller size indicated in the height and spread when designing and calculating the spacing for 50% shade per the Sunnyvale Municipal Code:

1. Landscaping Area. Parking lot landscaping shall follow the general requirements of Chapter 19.37 (Landscaping, Irrigation and Useable Open Space). A minimum of twenty percent of the parking lot area is required to be landscaped. Parking lots in single-family zoning districts (R-1, R-0, R-1.5 and R-1.7/PD) are exempt from parking lot landscaping requirements.

2. Shading Requirements. Trees shall be planted and maintained throughout the parking lot to ensure that at least fifty percent of the parking area will be shaded within fifteen years of tree establishment. Up to twenty-five percent of the fifty percent parking lot shading requirement (twelve and one half percent of the total parking lot area) may be met with installation of solar energy systems rather than trees.)

C. Refer to the complete SMC Chapter 19.37 for site triangles and lighting standards.

21.3.5 Backfill, Structural Soils and Amendments

A. Street trees, parking lot trees, trees in grates, sidewalks and road sides with planting areas less than 8 feet by 8 feet should be planted with structural soil backfill with

amendments and fertilizers as specified in LMSSC Section 32 91 00 Landscape Soil Preparations and Materials.

B. Trees and plants in all other landscape areas shall be planted with backfill, amendments and fertilizers as specified in the LMSSC Section 32 91 00 Landscape Soil Preparations and Materials.

21.3.5 Planting and Irrigation Hydro-Zones

A. Plants and trees shall be arranged and installed with others having similar water requirements called hydrozones. The LMSSC Landscape Design Standards group recommended plants into three hydro-zones:

1. Medium,
2. Low
3. Very Low

B. The hydrozones for each plant can be found in the recommended list of plants.

21.3.6 Plants Irrigated with Reclaimed Water

A. Portions of the site and new planting may be irrigated with reclaimed water. It is important to determine if new planting and tree installation projects will be irrigated with potable or reclaimed water. Plants that are sensitive to the salt and boron content of reclaimed water should not be utilized in the LMSSC, Sunnyvale Campus.

B. Plants identified in the recommended plant lists have been selected in part for their low water use and some tolerance to reclaimed water. All of the plants have been identified as having moderate tolerance of the salt and boron found in reclaimed water.

21.3.6 Tree and Plant Container Sizes

A. Tree and plant container sizes trees must adhere to planting material requirements of the specifications in LMSSC Section 32 93 00 Landscape Planting Materials.

B. All street and parking lot trees shall be a minimum of 24” box container size with height, caliper and condition as specified in LMSSC Section 32 93 00 Landscape Planting Materials.

C. 15 gallon containers trees may be planted for up to 30% of the total number of trees in a contiguous planting area. 15 gallon container trees must adhere to the height and caliper size as specified in LMSSC Section 32 93 00 Landscape Planting Materials.

D. Shrubs, groundcovers and perennials shall be a minimum of 1 gallon container size unless otherwise specified by the designing Landscape Architect. Minimum container sized for the recommended shrubs, groundcovers and perennials can be found on the LMSSC Plant Lists.

21.3.7 Planting and Irrigation Establishment Period

A. Establishment period of plants will vary depending on plant species, water requirements and site conditions but are generally between 1-2 years for perennials, ground covers and small shrubs and 3-5 years for large shrubs and trees. Contractor maintenance

period shall be a minimum of one year for all plants and shall include a 90 day minimum maintenance period for all landscape projects.

21.3.8 Sod Lawn and No-Mow Sod

A. Sod lawns should be considered only when the lawn area provides more than an aesthetic value and incorporates alternate uses such as recreation and gathering spaces. No-mow sod requires less water and maintenance but should also be incorporated sparingly and where it might provide additional benefits such as slope stabilization, bio-retention and native habitat. California native no-mow grass sod and seed is available and should be considered.

21.3.8 Sustainable Landscaping

A. The “Bay-Friendly Landscape Standards, Sustainable Practices for the Landscape Professional” is an important resource for designing and installing trees, plants, and other landscape elements in the Lockheed Martin Sunnyvale Campus. Many of the trees and plants identified on the recommended list of plants can be found in the Common Plant Communities of the San Francisco Bay Area. These standards recommend referring to the Bay-Friendly Landscape Guidelines for additional help in creating a sustainable landscape. Planting designs and installation should comply with the “Bay Friendly Landscape Guidelines.”

B. When construction projects are being designed and built with Leadership in Energy and Environmental Design (LEED) goals, points can be scored for Protecting and Restoring Habitat in Section Wec1.1-1.2. and Water Use Reduction under Section SSc5.1 Water Efficient Landscaping. Refer to LMSSC Standard Specifications Section 0181 13 for LEED requirements.

C. Some areas of the campus and perimeters could be part of native or habitat restoration projects. Restoration projects may include plants and practices that are outside the LMSSC Landscape Standards. These areas may have temporary or no irrigation and require specialized designs and considerations.

21.3.9 Tree and Plant Placement

A. The placement of trees and shrubs in turf areas should be done with careful consideration of species, mature size, rooting habits and depths, and water requirements.

B. When trees are planted they must be mulched according to the LMSSC Standard Specifications Section 32 91 00 Landscape Soil Preparations and Materials. Do not locate shrubs in turf areas. Locate shrubs a minimum of 30 inches or half the specified plan spacing from center of root ball to pavement. Ensure the mature size footprint they produce does not extend into pedestrian or vehicle pathways or interfere with the site triangle/distance at roadway intersections or driveways.

C. Carefully consider the placement of trees in relation to facility structures and utilities. Underground utilities must be avoided by a minimum of 8 feet in any direction. In case of conflicts with utilities, contact the appropriate LMSSC personnel to determine the correct setback of trees and shrubs from the utility in question. When considering planting trees in proximity to gas or sewer lines, plastic root barriers should be used.

D. Determine location of PG&E easements from the LMSSC Sunnyvale site plan. No plants taller than 18 inches when mature shall be placed within easement. Trees outside

easement shall be placed so that when mature, foliage and roots remain clear of easement.

E. Keep larger canopy trees 20 feet from any building edge. Trees with less than 20 foot spread can be 10 to 15 feet from a structure. Coordinate placement of canopy shade trees with roadway or pedestrian path lighting.

F. Design all landscapes so they do not impede visual assessment or allow bridging of any security fence.

21.3.10 Hardscape Options

A. New hardscapes and paving should consider utilizing pervious pavements, permeable paver systems, decomposed granite paths and other permeable alternatives where appropriate, to address California's C.3 requirements for low impact development and storm water infiltration. Hardscape elements may also be considered for LEED credits. Refer to LMSSC Standard Specifications Section 0181 13 for LEED requirements.

21.3.11 Site Furnishings

A. Designers should also consider specifying materials and site furnishings that are made from recycled materials and renewable sources. All trash receptacles should include separated recycling and composting bins. Site furnishings may also be considered for LEED credits. Refer to LMSSC Standard Specifications Section 0181 13 for LEED requirements.

21.4 Recap

A. It is important to determine early in a project whether a project is Maintenance, a Minor Landscape Project or a Significant Landscape Project. Utilize these standards early when initiating a project to determine the scope, priorities and requirements for a new landscaping at the LMSSC, Sunnyvale Campus.

B. Landscapers and landscape contractors should adhere to the recommended planting list included in these landscape standards and the LMSSC Standard Specifications.

C. For significant design projects the Landscape Architect should review the recommended plant lists and determine if and which plants should be utilized based on their design concepts and site conditions. Design should adhere to and incorporate the LMSSC Standard Specifications.

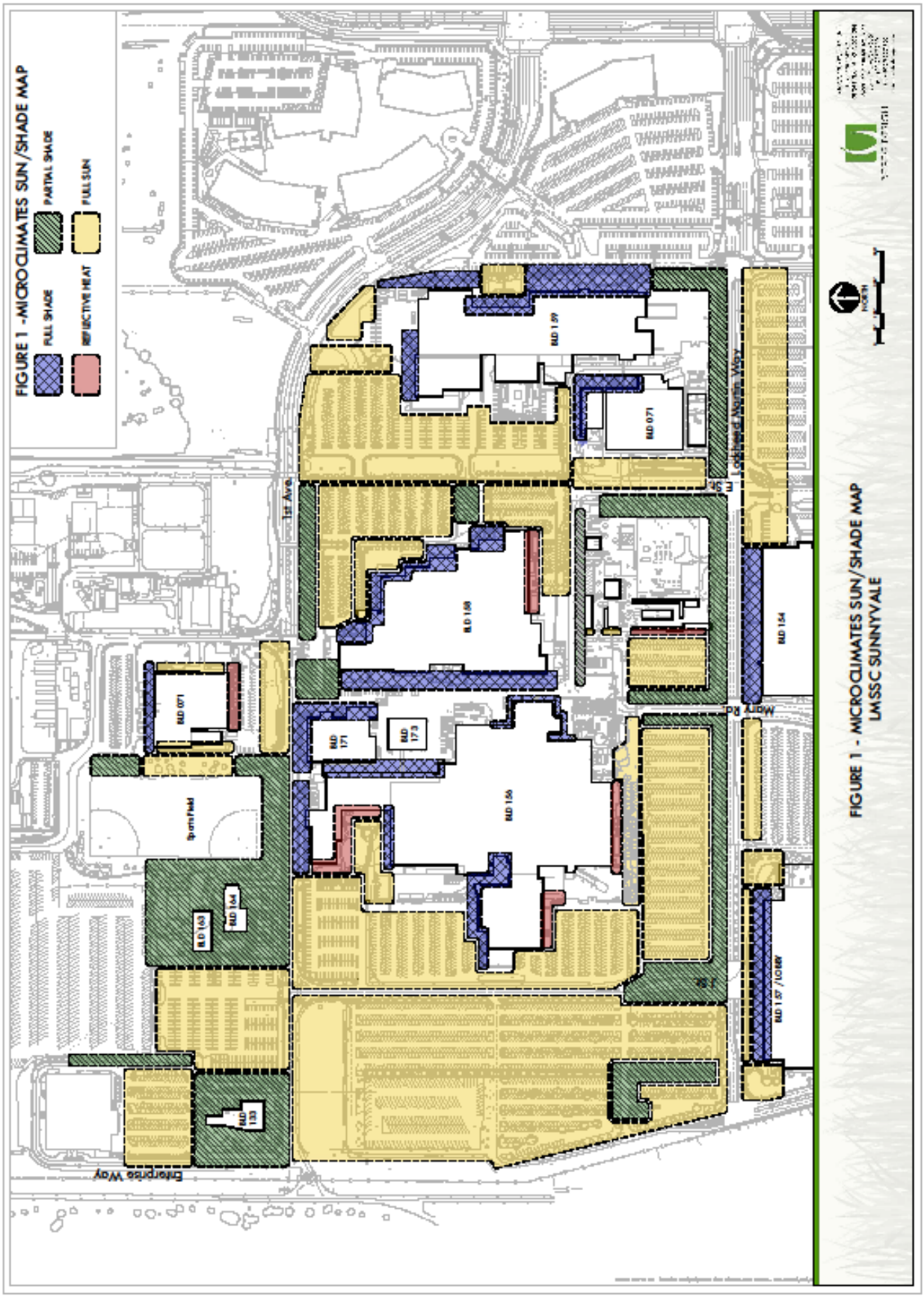
FIGURE 1 - MICROCLIMATES SUN/SHADE MAP
FULL SHADE
PARTIAL SHADE
REFLECTIVE HEAT
FULL SUN
1st Ave
Enterprise Way
Sports Field
BLD 071
BLD 171
BLD 173
BLD 156
BLD 154
BLD 157 /LCMSF
BLD 133
BLD 143
BLD 144
BLD 159
BLD 158
Moffy Rd
Lockheed Martin Way
NORTH
FIGURE 1 - MICROCLIMATES SUN/SHADE MAP
LMSSC SUNNYVALE

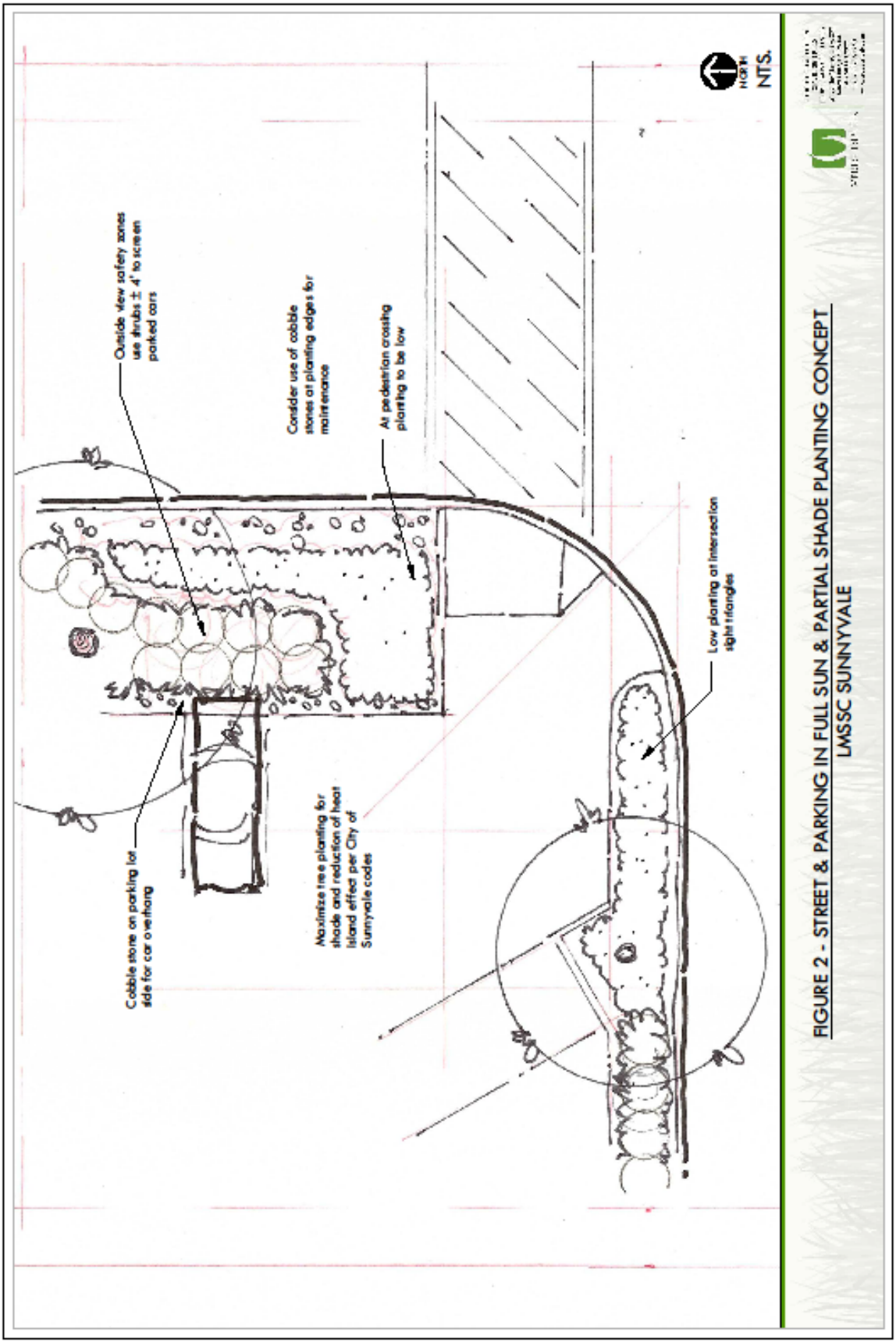

FIGURE 2 - STREET & PARKING IN FULL SUN & PARTIAL SHADE PLANTING CONCEPT
LMSSC SUNNYVALE

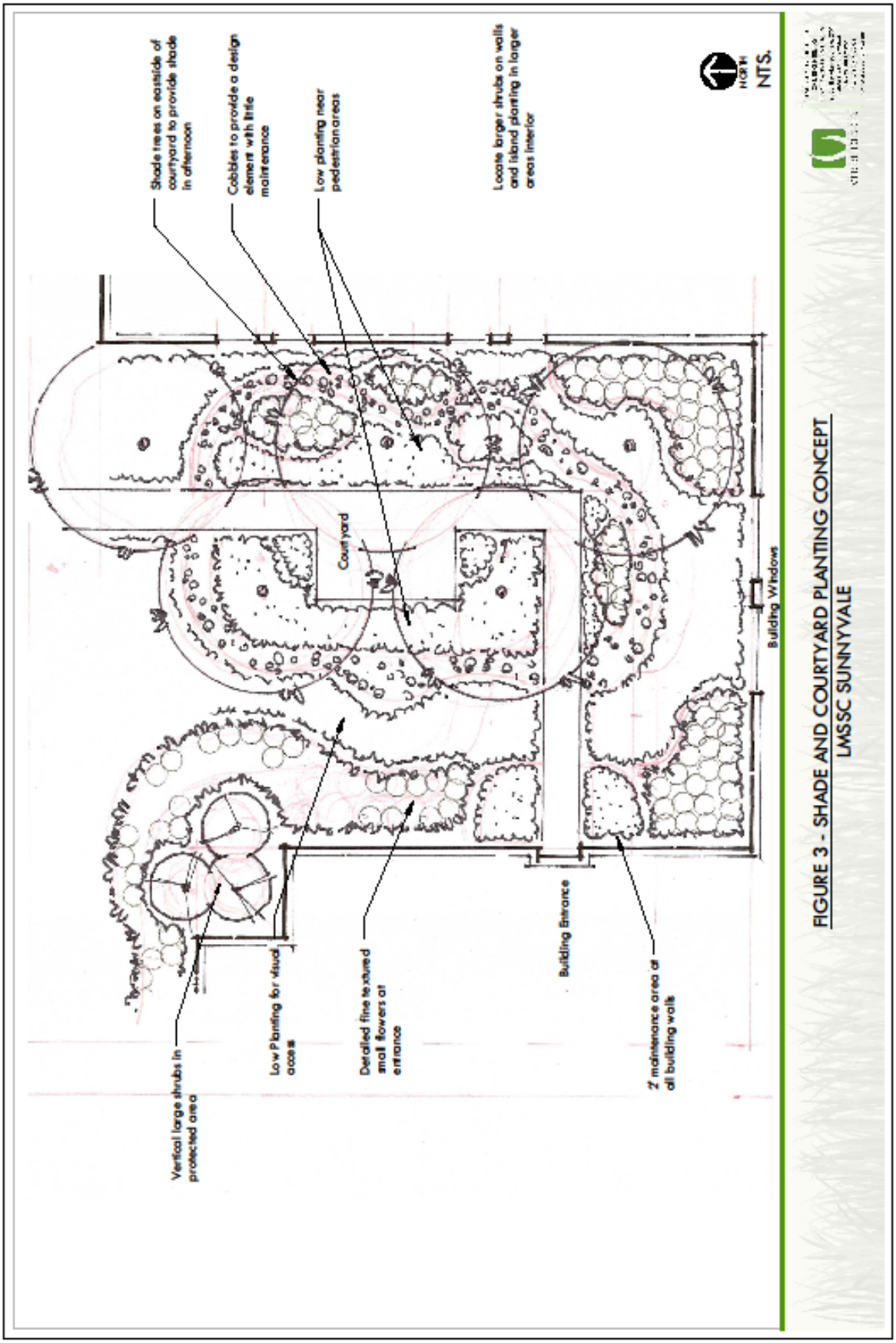
Shade trees on eastside of courtyard to provide shade in afternoon
Cobbles to provide a design element with little maintenance
Low planting near pedestrian areas
Locate larger shrubs on walls and island planting in larger areas interior
NORTH
NTS.
Courtyard
Building Windows
Building Entrance
Vertical large shrubs in protected area
Low Planting for visual access
Detailed fine textured small flowers at entrance
2' maintenance area at all building walls
FIGURE 3 - SHADE AND COURTYARD PLANTING CONCEPT
LMSSC SUNNYVALE

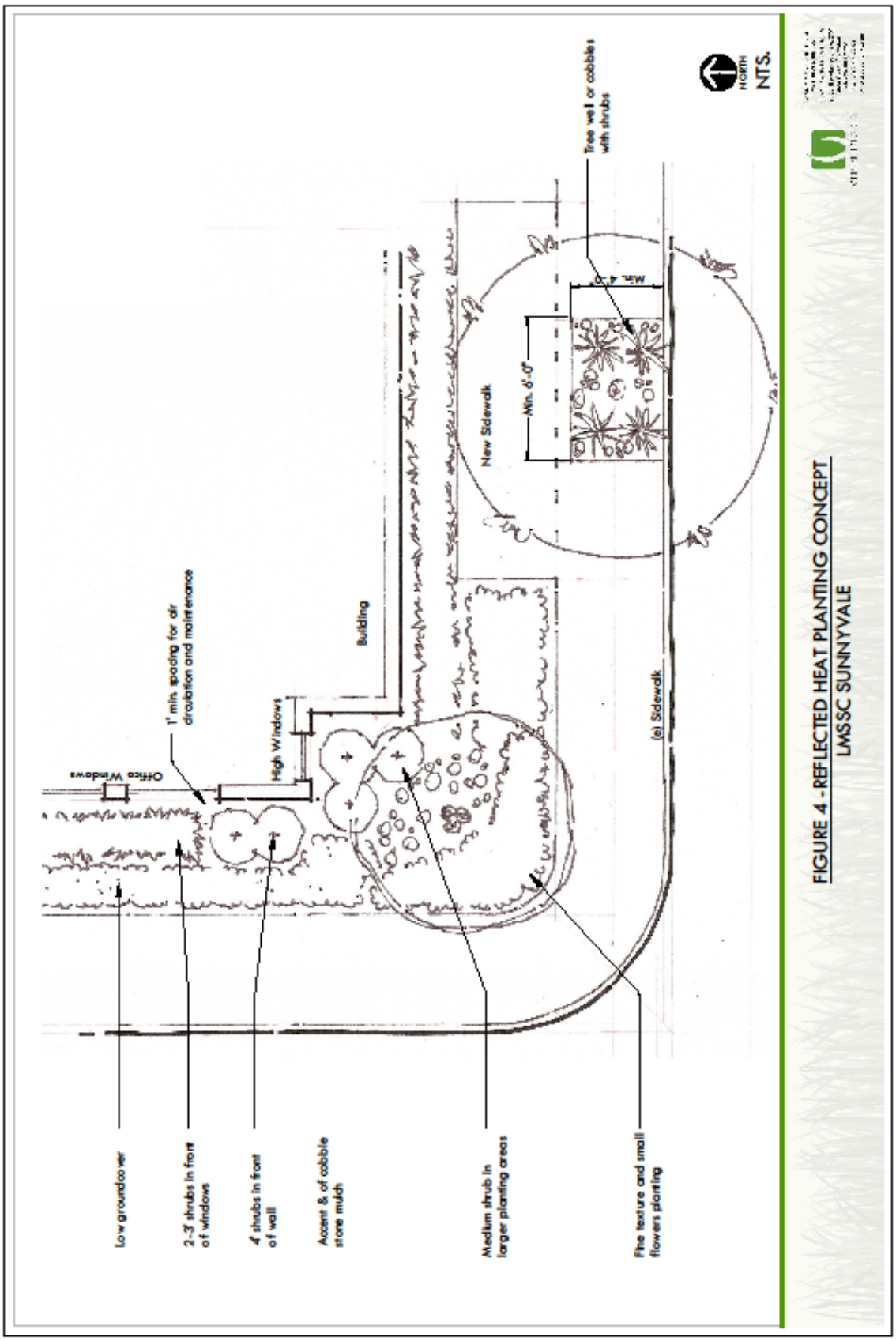

FIGURE 4 - REFLECTED HEAT PLANTING CONCEPT
LMSSC SUNNYVALE

Full Sun Plants

Shrub	Common Name	Foliage	Native	Hydrozone	Rebate
Agave spp.	Agave	Succulent	N	Low	Y
Aloe spp.	Aloe	Succulent	N	Low	Y
Arctostaphylos densiflora 'Howard McMinn'	Howard McMinn Manzanita	Evergreen	Y	Very Low	Y
Artemisia 'Powis Castle'	Powis Castle Wormwort	Evergreen	N	Low	Y
Cistus spp.	Rockrose	Evergreen	N	Low	Y
Dendromecon harfordii	Island Bush Poppy	Evergreen	Y	Low	Y
Galvezia speciosa	Island Bush Snapdragon	Evergreen	Y	Low	Y
Grevillea rosmarinifolia 'Scarlet Sprite'	Rosemary Grevillea	Evergreen	N	Low	Y
Lavandula spp.	Lavender	Evergreen	N	Low	Y
Phormium spp.	New Zealand Flax	Evergreen	N	Low	Y
Sollya heterophylla	Australian Bluebell Creeper	Evergreen	N	Low	Y
Westringia fruticosa 'Smokey'	Coast Rosemary	Evergreen	N	Low	Y
Groundcover	**Common Name**	**Foliage**	**Native**	**Hydrozone**	**Rebate**
Aeonium spp.	Canary Island Rose	Succulent	N	Low	Y
Arctostaphylos 'Emerald Carpet'	Emerald Carpet Manzanita	Evergreen	Y	Very Low	Y
Ceanothus griseus horizontalis 'Yankee Point'	Yankee Point California Lilac	Evergreen	Y	Very Low-Low	Y
Cotoneaster dammeri	Bearberry cotoneaster	Evergreen	M	Low	Y
Perennials	**Common Name**	**Foliage**	**Native**	**Hydrozone**	**Rebate**
Achillea millefolium	Yarrow	Herbaceous	Y	Low	Y
Anigozanthos spp.	Kangaroo Paw	Evergreen	N	Low	Y
Armeria maritima	Sea Thrift	Evergreen	Y	Low	Y
Lupinus sp.	Lupine	Herbaceous	Y	Low	Y
Grasses	**Common Name**	**Foliage**	**Native**	**Hydrozone**	**Rebate**
Calamagrostis x acutiflora 'Karl Foerster'	Karl Foerster Feather Grass	Evergreen	N	Low	Y
Helictotrichon sempervirens	Blue Oat Grass	Evergreen	N	Low	Y
Miscanthus transmorrisonensis	Evergreen Miscanthus	Evergreen	N	Low	Y
Muhlenbergia capillaris	Pink Muhly Grass	Evergreen	N	Low	Y
Muhlenbergia rigens	Deer Grass	Evergreen	Y	Low	Y
Pennisetum alopecuroides 'Hameln'	Dwarf Fountain Grass	Evergreen	N	Low	Y
Vines	**Common Name**	**Foliage**	**Native**	**Hydrozone**	**Rebate**
Bougainvillea spp.	Bougainvillea	Evergreen	N	Low	Y
Campsis grandiflora	Chinese Trumpet Creeper	Semi-Ever	N	Low	Y
Rebate: Indicates Part of the Santa Clara Valley Water District Rebate Program					

Partial Shade Plants

Shrubs	Common Name	Foliage	Native	Hydrozone	Container	Rebate
Arctostaphylos den. 'Howard McMinn'	Howard McMinn	Evergreen	Y	Very Low	5 Gallon	Y
Asparagus densiflorus 'Myers'	Myers Asparagus	Evergreen	N	Low-Medium	1-5 Gallon	Y
Calycanthus occidentalis	Western Spice Bush	Deciduous	Y	Low	5 Gallon	Y
Carpenteria californica	Bush Anemone	Evergreen	Y	Low	5 Gallon	Y
Correa 'Dusky Bells'	Australian Fuchsia	Evergreen	N	Low	5 Gallon	Y
Ceanothus maritimus 'Valley Violet'	California Lilac	Evergreen	Y	Very Low-Low	5 Gallon	Y
Galvezia speciosa	Island Bush Snapdragon	Evergreen	Y	Low	5 Gallon	Y
Grevillea rosmarinifolia 'Scarlet Sprite'	Rosemary Grevillea	Evergreen	N	Low	1-5 Gallon	Y
Loropetalum chinense	Chinese Fringe Flower	Evergreen	N	Low	5 Gallon	N
Sollya heterophylla	Australian Bluebell	Evergreen	N	Low	5 Gallon	Y
Groundcovers	**Common Name**	**Foliage**	**Native**	**Hydrozone**	**Container**	**Rebate**
Aeonium spp.	Canary Island Rose	Succulent	N	Low	1 Gallon	Y
Arctostaphylos uva-ursi	Kinnikinnick	Evergreen	Y	Very Low	1 Gallon	Y
Asparagus densiflorus 'Myers'	Myers Asparagus	Evergreen	N	Low-Medium	1 Gallon	Y
Coprosma x kirkii	Creeping Coprosma	Evergreen	N	Low	1-5 Gallon	Y
Cotoneaster dammeri	Bearberry cotoneaster	Evergreen		Low	1-5 Gallon	Y
Perennials	**Common Name**	**Foliage**	**Native**	**Hydrozone**	**Container**	**Rebate**
Bergenia crassifolia	Winter Blooming Bergenia	Evergreen	N	Low-Medium	1 Gallon	Y
Displacus aurantiacus	Monkey Flower	Herbaceous	Y	Low-Medium	1 Gallon	Y
Grasses	**Common Name**	**Foliage**	**Native**	**Hydrozone**	**Container**	**Rebate**
Carex tumulicola	Berkeley Sedge	Evergreen	N	Low-Medium	1 Gallon	Y
Elymus magellanicus	Blue Wheatgrass	Evergreen	N	Low	1 Gallon	N
Muhlenbergia capillaris	Pink Muhly Grass	Evergreen	N	Low	1 Gallon	Y
Muhlenbergia rigens	Deer Grass	Evergreen	Y	Low	1-5 Gallon	Y
Pennisetum alopecuroides 'Hameln'	Dwarf Fountain Grass	Evergreen	N	Low	1-5 Gallon	Y
Sesleria autumnalis	Autumn Moor Grass	Evergreen	N	Medium	1 Gallon	Y
Vines	**Common Name**	**Foliage**	**Native**	**Hydrozone**	**Container**	**Rebate**
Ficus pumila	Creeping Fig	Evergreen	N	Medium	1-5 Gallon	Y
Distictis buccinatoria	Blood-Red Trumpet Vine	Evergreen	N	Medium	1-5 Gallon	Y
SCVWD: Indicates Part of the Santa Clara Valley Water District Rebate Program						

Full Shade Plants

Shrubs	Common Name	Foliage	Native	Hydrozone	Container	Rebate
Calycanthus occidentalis	Western Spice Bush	Deciduous	Y	Low	5 Gallon	Y
Carpenteria californica	Bush Anemone	Evergreen	Y	Low	5 Gallon	Y
Physocarpus spp	Ninebark	Deciduous	Y	Low	5 Gallon	Y
Sarcococca ruscifolia	Sweet box	Evergreen	N	Low	5 Gallon	Y
Woodwardia fimbriata	Giant Chain Fern	Evergreen	N	Medium	5 Gallon	N
Groundcovers	**Common Name**	**Foliage**	**Native**	**Hydrozone**	**Container**	**Rebate**
Epimedium x perralchicum	Barrenwort	Evergreen	N	Low	1 Gallon	Y
Ophiopogon japonicus	Mondo Grass	Evergreen	N	Medium	1 Gallon	Y
Ruscus hypoglossum	Butcher's broom	Evergreen	N	Low	1 Gallon	Y
Polystitum munitum	Western Sword Fern	Evergreen	Y	Low	1 Gallon	Y
Sedum spp	Sedum	Evergreen	Y	Low	1 Gallon	Y
Perennials	**Common Name**	**Foliage**	**Native**	**Hydrozone**	**Container**	**Rebate**
Bergenia crassifolia	Winter Blooming	Evergreen	N	Low-Medium	1 Gallon	Y
Heuchera spp.	Coral Bells	Evergreen	Y	Low	1 Gallon	Y
Vines	**Common Name**	**Foliage**	**Native**	**Hydrozone**	**Container**	**Rebate**
Parthenocissus triscuspidata	Boston Ivy	Semi-Evergreen	N	Medium	1-5 Gallon	Y
Rebate: Indicates Part of the Santa Clara Valley Water District Rebate Program						

Reflected Heat Plants						
Shrub	**Common Name**	**Foliage**	**Native**	**Hydrozone**	**Container**	**Rebate**
Agave spp.	Agave	Succulent	N	Low	1-5 Gallon	Y
Aloe spp.	Aloe	Succulent	N	Low	1-5 Gallon	Y
Cistus spp.	Rockrose	Evergreen	N	Low	1-5 Gallon	Y
Lavandula spp.	Lavender	Evergreen	N	Low	1-5 Gallon	Y
Phormium spp.	New Zealand Flax	Evergreen	N	Low	5 Gallon	Y
Rosa rugosa	Rugosa Rose	Evergreen	N	Low	1-5 Gallon	Y
Sollya heterophylla	Australian Bluebell	Evergreen	N	Low	1 Gallon	Y
Groundcover	**Common Name**	**Foliage**	**Native**	**Hydrozone**	**Container**	**Rebate**
Arctostaphylos 'Emerald Carpet'	Emerald Carpet	Evergreen	Y	Very Low	1-5 Gallon	Y
Ceanothus griseus horizontalis 'Yankee	Yankee Point California	Evergreen	Y	Very Low	1-5 Gallon	Y
Teucrium aroanium	Creeping Germander	Evergreen	N	Low	1-5 Gallon	Y
Perennials	**Common Name**	**Foliage**	**Native**	**Hydrozone**	**Container**	**Rebate**
Achillea millefolium	Yarrow	Evergreen	Y	Low	1 Gallon	Y
Anigozanthos spp.	Kangaroo Paw	Evergreen	N	Low	1 Gallon	Y
Nepeta faassenii	Catmint	Evergreen	Y	Low	1 Gallon	Y
Erigeron glaucus 'Wayne Roderick'	Beach Aster	Evergreen	Y	Low	1 Gallon	Y
Sedum spp.	Stonecrop	Succulent	N	Low	1 Gallon	Y
Grasses	**Common Name**	**Foliage**	**Native**	**Hydrozone**	**Container**	**Rebate**
Calamagrostis x acutiflora 'Karl	Karl Foerster Feather	Evergreen	N	Low	1-5 Gallon	Y
Muhlenbergia rigens	Deer Grass	Evergreen	Y	Low	1 Gallon	Y
Sesleria autumnalis	Autumn Moor Grass	Evergreen	N	Medium	1Gallon	Y
Rebate: Indicates Part of the Santa Clara Valley Water District Rebate Program						

Street & Parking Lot Trees

Street Trees	Common Name	Height	Width	Foliage	Native	Hydrozone	Microclimate
Platanus x acerifolia 'Columbia'	London Plane Tree	40 - 80 ft	30 - 40 ft	Deciduous	N	Medium	F
Ulmus parvifolia	Chinese Elm	40 - 50 ft	25 - 40 ft	Deciduous	N	Medium	F
Zelkova serrata	Japanese zelkova	50 - 80 ft	50 - 80 ft	Deciduous	N	Medium	F
Accent Street Trees	**Common Name**	**Height**	**Width**	**Foliage**	**Native**	**Hydrozone**	**Microclimate**
Olea europea 'Fruitless'	Fruitless Olive	15 - 25 ft	15 - 20 ft	Evergreen	N	Very Low	F,
Pyrus calleryana 'Aristocrat'	Aristocrate Pear	20 - 30 ft	20-25 ft	Semi-Ever	N	Medium	F,
Malus 'Prairy Fire'	Prairy Fire Crabbapple	12 - 18 ft	12 - 15ft	Deciduous	N	Medium	F,

Landscape Trees

Landscape Shade Trees	Common Name	Height	Width	Foliage	Native	Hydrozone	Microclimate
Arbutus menziesii	Madrone	35 -60 ft	25 - 40 ft	Evergreen	Y	Low	F,
Platanus x acerifolia 'Columbia'	London Plane Tree	40 - 80 ft	30 - 40 ft	Deciduous	N	Medium	F,
Quercus agrifolia	Coast Live Oak	40 - 70 ft	40 - 70 ft	Evergreen	Y	Low	F,
Zelkova serrata	Japanese zelkova	50 - 80 ft	50 - 75 ft	Deciduous	N	Medium	F
Landscape Accent Trees	**Common Name**	**Height**	**Width**	**Foliage**	**Native**	**Hydrozone**	**Microclimate**
Chamaerops humilis	Med. Fan Palm	8 - 12 ft	10 - 15 ft	Evergreen	N	Low	F,
Punica granatum	Pomegranate	12 - 25 ft	12 - 20 ft	Deciduous	N	Medium	F,
Prunus cerasifera 'Kruater	Purple Leaf Plum	15 - 25 ft	15- 25 ft	Deciduous	N	Medium	F,
Washingtonia filifera	California Fan Palm	40 - 50 ft	15 - 20 ft	Deciduous	Y	Medium	F,
Landscape Background Trees	**Common Name**	**Height**	**Width**	**Foliage**	**Native**	**Hydrozone**	**Microclimate**
Melaleuca quinquenervia	Cajeput, Paperbark Tree	25 - 40 ft	15 - 30 ft	Evergreen	N	Low	F
Pinus contorta	Shore Pine	50 - 60 ft	30 - 40 ft	Evergreen	Y	Low	F
Sequoia sempervirens 'Los Altos'	Coast Redwood	60 - 100 ft	30 - 50 ft	Evergreen	Y	Medium	F,
Umbellularia californica	California Bay Tree	40 - 60 ft	30- 45 ft	Evergreen	Y	Low	S,P,
Microclimates: F=Full Sun, R=Reflected Heat, S= Full Shade, P=Partial Shade							

End of Landscape Design Standard

APPENDIX A
CITY BUILDING PERMIT REQUIREMENTS

A.1 SUNNYVALE BUILDING PERMIT REQUIREMENTS

The following are current concerns and requirements identified by the City of Sunnyvale to Lockheed Martin Space Systems (LMSSC).

I. GENERAL

1. The City Staff feels it would be beneficial to all parties if they are introduced to a major project while in its early conceptual stages.

2. In addition to the National and State Codes, the City of Sunnyvale requires compliance with the Sunnyvale Municipal Code.

3. Contractors cannot start any work, including demolition, until the necessary permits have been obtained. It is possible to secure a permit for demolition work only, if so desired.

4. LMSSC requires Contractors to pay the permit fee and the construction tax when picking up the necessary construction permits.

5. Some projects may apply for waiver of handicapped compliance if they are under $75,000.00, but they will only be relieved of the toilet upgrade requirement.

6. Fees for Use and Grading Permits are established by the City while fees for Shell and Interior Development Permits are based on ICBO cost factors or the actual valuation of the project.

II. PLAN CHECK SUBMITTALS

A. GENERAL

1. In order to prevent costly field modifications due to non-compliance with applicable building codes, the City recommends that as much information as possible that concerns Code items be shown on the drawings rather than in the specifications.

2. All projects submitted to the City for the Plan Check must have Site Plans that identify handicapped parking and accessibility to the building. For interior modification projects, an overall building plan must also be attached showing the path of travel to the project area.

3. Building Permit Supplement forms must be submitted with all projects.

4. The LMSSC Standard Cover Sheet with information and data concerning occupancy types, allowable building area and type of construction will continue to be a requirement on all projects. Flame spread ratings of wall coverings used must also be indicated.

5. The building permit set and the contract set may be different as far as composition but not intent. The building permit set will be the job copy which the City Field Inspector will refer to for code compliance. The contract set is the set that the Contractor will use to comply with LMSSC project requirements.

6. All rooms in the project scope and adjacent area must be identified by generic room use, i.e., office, storage, etc.

7. Demolition drawings must be submitted if existing egress corridors or structural walls are being altered or if the project involves hazardous chemicals regulated by Title 20 of the Sunnyvale Municipal Code.

   If none of the above applies to the project, then demolition drawings need not be submitted. However, the provisions in Section 87 of the Uniform Fire Code concerning Fire Safety during Demolition and Construction apply at all times.

8. Title 24 calculations are required on all projects over 1,000 sq. ft. even if the project does not require a Building Permit. (Example: electrical modifications which require an electrical permit, but not a building permit.) They must be signed by the Contractor or a California registered Professional Engineer.

9. The City of Sunnyvale will do Title 24 certification review.

10. Projects involving Title 20 requirements must have demolition drawings and closure report forms submitted with the building permit set. Title 20 requires the double containment of all piping, neutralization systems and containers of hazardous materials. All secondary containment and calculations must be shown on the drawings.

    A list of chemicals stored or used in the project area must be attached. This list should include quantities and concentrations. In addition, the total quantity of chemicals within the building (or control area) must be evaluated against the occupancy classification. Rate of usage is not required.

11. Landscaping plans if applicable, must indicate the type or species of plants and trees. This is to aid the Fire Department in determining whether any plants or trees encroach into the required space of the fire access lanes. The minimum width of the lane is 26 feet and it must be clear from the ground up.

B. APPROVALS PRIOR TO PLAN CHECK SUBMITTAL

Restaurant and cafeteria projects need to have the County Health Department's approval before applying for a building permit.

C. PLANNING REQUIREMENTS FOR PLAN CHECK SUBMITTAL AND USE PERMITS

1. The City's Planning Department requires architectural elevations on all new building projects and projects involving additions to an existing building exterior.

2. Use Permits obtained for a project from a City agency or department must be attached to the drawings when applying for a Building Permit.

3. Landscaping/irrigation plans are required for new buildings by the City's Planning Department.

4. Projects involving new freestanding buildings require a Use Permit.

5. Projects involving tanks, antennas and other exterior additions/modifications not intended or practical to be screened, require an Administrative Use Permit. Refer to Roof Screening Requirements Matrix, Figure A.1.5.

6. Additions to buildings in Plants 1 and 5 (in Sunnyvale) do not require a Use Permit if the addition is within the allowable Floor Area Ratio.

7. New exterior trash enclosures must have elevations and details or an adequate description for Planning Department review during the Plan Check.

D. EXPRESS PLAN CHECK

1. The basic difference between the Express Plan Check and the One Stop Plan Check is that the Express Plan Check is designed for projects that can be checked by each plan checker in 20 minutes or less. The One Stop process on the other hand normally takes a maximum of 40 calendar days for the City to reply with a complete Corrections List. The 40 days does not include the Designer's correction time or the subsequent resubmittal review by the City. Resubmittal review by the City is 10 working days.

2. The following conditions disqualify a project from the Express Plan Check process:

   a. Hazardous occupancy modifications that have not been approved by Water Pollution Control and Hazardous Material.

   b. Structural calculations and drawings that take more than 20 minutes to review.

c. New buildings.

d. Major interior modifications requiring more than 20 minutes for each Plan Checker from the different City departments to review.

e. Fire protection systems design and redesign work.

f. A project with hazardous chemicals stored or used in its area.

Projects involving Title 20 requirements may not be submitted for Express Plan Check unless previous agreement has been negotiated with Sunnyvale HAZMAT by LMSSC O/47-20, Occupational Safety and Health. O/47-20 will arrange for a Sunnyvale HAZMAT representative to appear at the Building Department counter to sign off the drawings during the Express review.

3. A statement made by the City Staff at a weekly LMSSC/Sunnyvale meeting that a project may qualify for the Express Plan Check process is not a guarantee that the project will be granted a permit under that process.

The weekly meetings are for preliminary review of projects for conceptual approval and not plan checks. Conditions discovered during the actual plan check review may prevent a project from getting a permit over the counter.

4. The City Staff regrets that they cannot assign a person to status a project in the One Stop Plan Check process because of manpower limitation. The City requests that LMSSC or its consultants/contractors not call in and inquire as to the status of a project until the 40 day maximum has passed.

III. CODE CLARIFICATIONS

A. ARCHITECTURAL/GENERAL CODE CLARIFICATIONS

1. Newly leased buildings and LMSSC owned buildings need not comply with present Codes unless modifications are made. The modifications must then comply with the present Code. Existing toilets however that comply with a previous Title 24, need not be brought up to the latest Title 24 standards.

2. When the use of an existing building is changed, present Codes apply to the modified area and the building will be changed to a mixed occupancy and evaluated as such.

3. A fire rated suspended ceiling assembly may be used in lieu of a hardcapped ceiling in the fire corridor if the fire rated ceiling is continuous throughout the entire story. All lights and registers must be protected. Use of this system must be approved in advance by LMSSC.

4. Existing ceilings in any room must be upgraded per current seismic bracing requirements whenever more than 10% of the ceiling framing in the room is removed.

5. Existing solid core doors in one hour fire rated corridors may remain. Provide new smoke seals and verify whether the door has a closer. Confirm on a job-by-job basis.

6. All smoke seals for fire doors must be approved by a testing agency or the State Fire Marshal.

7. Transformers above ceilings must be readily accessible and in most cases need to be relocated to floor level.

8. Existing bus ducts and electrical panels in one hour fire rated corridors must be relocated out of the corridor, or made safe behind rated walls and doors.

9. New disconnect switches, lighting, and HVAC controls (without lock boxes) must be installed at heights established by Title 24. Adequate clearances must also be provided. Certain areas, such as mechanical rooms, do not have to comply with this requirement.

10. Since LMSSC usually is occupying a building that is undergoing construction in some areas, the required path of egress must be maintained and clearly identified at all times. Provide construction barriers as required for safety of the occupied areas.

11. Ladders and equipment cages are to comply with requirements set by OSHA.

12. New equipment platforms require a Building Permit.

13. Roof screening is required when elements installed on the roof of a building are visible in elevation view (not ground level).

    In the Plant 1 complex, however, there is an agreement between LMSSC and the City regarding roof screening beyond 600 feet of public roads:

    a. New unscreened rooftop equipment on an existing building in Plant 1 within 600 feet of the property line will require an Administrative Use Permit.

    b. New rooftop equipment less than 5 feet above the building line in Plant 1, 600 feet beyond the property line requires Miscellaneous Plan Approval. Equipment must be painted.

    c. New rooftop equipment standing more than 5 feet above the building line in Plant 1, 600 feet beyond the property line requires Miscellaneous Plan Approval. Equipment must be painted.

14. The City of Sunnyvale requires that Sargent and Greenleaf dial combination locks, in wide use throughout Plants 1 and 5 secure areas, incorporate panic bars whenever two exits are required from a space. The S&G 8470 Secure Exit Device meets this requirement. A copy of the policy letter is included in Figure A.1.1.

15. The City of Sunnyvale enforces NFPA 75 regulations for Computer Rooms. Refer to Figure A.1.2, Computer Room Installation Requirements and Figure A.1.3, Guidelines to be used to Define a Computer Room.

B. CIVIL/STRUCTURAL

1. Grading plans if required, must show fire mains in compliance with NFPA 24. They must be signed and sealed by a licensed engineer in the State of California to design fire protection systems (if the designer is not the installer). The grading plans must additionally show all underground utility lines and fire access lanes. Thrust block detail must be submitted and must comply with NFPA 24.

2. Fire lanes must be indicated on Site Plans. There is a 65,000 pound (48,000 pound on a single axle) load requirement and a 26 feet minimum width on fire access lanes. Soils reports may be required if new fire access lanes are involved.

3. Soils reports and buoyancy calculations are required when installing or relocating underground tanks.

4. Structural plans and details are required on all new buildings, mezzanine additions, upper floor alterations, new stairs and modifications to existing structural elements. Calculations must accompany the drawings.

5. Pre-engineered metal building projects must have a full set of structural calculations submitted along with the drawings when submitted for Plan Check.

C. MECHANICAL

Smoke detection must be added at air return for all existing systems exceeding 2,000 CFM per Figure A.1.4, Smoke Detection at HVAC.

D. FIRE PROTECTION

1. Eight copies of the Underground Fire Main drawings must be submitted for Plant 5 buildings and four copies for Plant 1 areas.

2. Interior fire sprinkler drawings need only be submitted in triplicate.

3. Relocation of even one fire sprinkler head requires a Fire Protection Permit to be secured by the Contractor.

4. Fire protection system designs cannot be approved through the Express Plan Check process.

5. Reflected ceiling plans showing fire sprinkler heads should have a note stating that the head locations are approximate only. The standard fire sprinkler notes required by the City must be on the Cover Sheet.

6. Sunnyvale Code requires all attics and concealed spaces to be sprinklered.

7. When more than 10% of the ceiling framing in a room is removed, non-complying sprinkler systems must be upgraded within 15 feet of the area of removal. The intent of providing fire sprinkler coverage 15 feet beyond the project area in an existing non-conforming building is so the building, after enough modification projects, will eventually be totally sprinklered.

A.2 PALO ALTO BUILDING PERMIT REQUIREMENTS

The following are current concerns and requirements identified by the City of Palo Alto to LMSSC.

I. GENERAL

1. All projects submitted to the City for the Plan Check must have a Site Plan and/or an overall Building Plan that identifies handicapped parking and accessibility, the path of travel to the project area, exit corridor compliance handicapped accessibility to restrooms, and the extent of project Scope of Work.

2. All rooms in the project scope and adjacent area must be identified by generic room use, i.e., office, storage, etc., and not by LMSSC assigned name, i.e., CADAM Room.

3. All drawings and calculations are required to be “wet” stamped by a California licensed Architect or Engineer as applicable (every drawing, and the title page of the calculations).

4. It is the City’s preference to have folded drawings. Rolled drawings are acceptable only if folding is not practical. The sets shall be stapled together including specifications, and calculations.

5. Include all LMSSC information required on the Title Sheet according to Section 11 of this standard. The information includes items such as: LMSSC Building Number, Street Address, Register Number (RN), Area Locator, Key Plan, List of Drawings and General Notes. It is acceptable to use LMSSC numbering system.

6. The City will require Title 24 CF-1 and MF-1 information to be on the drawings (a separate drawing sheet for the forms is acceptable). Sticky back application will be acceptable. The remaining forms may be attached to the back of the specifications.

7. Structural calculations may be attached to the back of the specifications.

8. Supplemental specifications are acceptable (8-1/2 inch x 11 inch sheets).

9. Any referenced details shall be shown on the drawings (rather than in the specifications) due to the City's use of microfiche for past projects. The recommendation is to provide a blue line drawing of details for Plan Check with a temporary project drawing number. The sheet may be the same sheet used for the Title 24 CF-1 and MF-1 forms.

10. Building Permit Numbers or Plan Check Numbers are not issued until the project has completed plan check. Thus any reference to the job to the City should state: the date the permit was applied for (with the receipt number), the address and building number of the project.

11. LMSSC requests that communications with LMSSC from the City of Palo Alto reference the Building Number and the Expenditure Request (ER) Number, thus LMSSC can identify the building and the project within the building. When LMSSC applies for the permit, the ER number in the comments portion of the permit application shall be noted.

12. Palo Alto's Plan Check Engineers hours are from 7:30 AM to 5:30 PM with lunch scheduled from 12:00 Noon to 1:00 PM.

13. A permit is not required for rearranging or moving modular partitions (stated as being Haworth partitions 60 inches in height). This does not include electrical modifications.

14. It is the City's interpretation of Title 24 that any relocation of light fixtures is a circuit modification and will require calculations showing compliance.

15. Existing suspended ceilings shall be braced for lateral forces at the time of remodel. This shall include all ceilings within the project Scope of Work, even if the ceiling is not disturbed.

    This provision applies within the area of remodel and includes independent support of light fixtures installed in the ceiling.

II. PALO ALTO EXPRESS PLAN CHECK

A. The City of Palo Alto has established a "One Stop Permit" Center. The Center includes plan review personnel representing Building, Planning, Fire and Public Works Departments in one central location. The objectives of the Permit Center are:

1. Expedite plan review of various categories of projects.

2. Increase convenience to the public by having plans checked and permits issued at one location.

3. Provide a clear process for acquiring various types of permits.

4. Make more efficient use of staff resources by providing close proximity of all staff involved in plan check and permit issuance.

B. The primary concept is to receive plan check and issue building permits for specified “Express” projects in one to three working days. A list of specified projects include:

1. Commercial

a. Non-structural interior alterations to tenant spaces of less than 3,000 square feet.

b. Store front and other minor exterior alterations that have been approved by the LMSSC Architectural Review Board (ARB).

2. Industrial

Non-structural interior alterations of less than 5,000 square feet that do not include hazardous materials or special life safety review.

3. Miscellaneous Permits

a. Fences

b. Reroofing

c. Street opening

d. Some encroachment permits

A.3 SANTA CLARA REQUIREMENTS FOR USE OF SARGENT AND GREENLEAF SAFEMASTER 8470 LSR SPIN DIAL LOCKS

The use of the non-panic type device shall be regulated.

1. When the room (or area) is intended to be occupied, the lock shall be opened by authorized personnel and made inactive during the hours of operation or occupancy.

2. Instructions shall be attached to the door (near each lock) which provides instructions on how to operate the lock.

3. The lock shall not be installed on required exits serving a cumulative occupant load of 50 or more.

The use of the S&G 8470 High Security Exit Device (panic device) is not regulated.

END OF APPENDIX A

FIGURE A.1.1

CITY OF SUNNYVALE LETTER, Page 1

SAFEMASTER 8470 LSR SPIN DIAL LOCKS

October 27, 1987

The Department of Community Development, Building Safety Division and the Fire Prevention Bureau, Department of Public Safety have jointly adopted a policy concerning the use of Sargent and Greenleaf Locking Device Model 8470 (LSR) Life Safety Retrofit and other similar locking mechanisms.

The City of Sunnyvale will permit the installation of Sargent and Greenleaf and similar locking devices subject to the following conditions:

Part I When one (1) exit is required:

1) The Sargent and Greenleaf Model 8470 (LSR) must be installed and maintained according to the document presented to the City of Sunnyvale on July 24, 1984 by James H. Bollen III, Chief Technical Security.
2) The locking mechanism is to be equipped with a means of identification, approved by the City of Sunnyvale, to indicate whether it is locked or unlocked.

Part II When two (2) exits are required:

1) In addition to complying with Part I of this policy, an additional exit door shall be installed within thirty six inches (36") of the access door equipped with security hardware, and shall be fitted with panic hardware. The additional door shall conform with the Uniform Building Code Chapter 33, Section 3303 and 3304, 1985 Edition.
2) The security access door shall have no hardware on the interior side of the door other than that which is associated with the security locking mechanism.

Part III Doors within corridors, lobbies, and vestibules:

1) The Sargent and Greenleaf Model 8470 (LSR) shall not be installed on doors within corridors, lobbies or vestibules unless complying with Part I and II of this policy.

Part IV Security Locking Mechanisms:

1) Locking mechanisms other than Sargent and Greenleaf Model 8470 (LSR) must be approved for installation by The Department of Community Development, Building Safety Division and The Fire Prevention Bureau, Department of Public Safety prior to its use within the City of Sunnyvale.

ADDRESS ALL MAIL TO: P.O. BOX 3707 SUNNYVALE, CALIFORNIA 94086-3707
For deaf access, call TDD/TTY (408) 730-7501

CITY OF SUNNYVALE LETTER, Page 2

SAFEMASTER 8470 LSR SPIN DIAL LOCKS

Part V **Exception:**

1) Parts I, II and III of this Policy shall not apply to doors equipped with hardware, approved by the city, which will activate the security locking mechanism.

Part VI **Violation:**

1) Any violation of this Policy will be just cause to revoke the conditional use of the security locking mechanism.

Frank B. Cauthorn
Building Inspection Superintendent

Ruben D. Grijalva
Fire Marshal

FIGURE A.1.2

CITY OF SUNNYVALE

COMPUTER ROOM INSTALLATION REQUIREMENTS

CITY OF SUNNYVALE CALIFORNIA

Telephone (408) 730-7212

COMPUTER ROOM INSTALLATIONS

1. Cross-zoned smoke detector system is required above and below the raised floor. System shall be designed to sound an alert when a single detector is activated. Upon activation of a second detector all electrical power to the room, and the air handling equipment shall automatically shut-down. Room lighting may stay on. Smoke detectors and system shall be State of California Fire Marshal listed. Submit plans and specifications to the Fire Prevention Bureau prior to installation.

2. The computer room walls shall extend from the room floor to the underside of the roof or underside of the floor above. The computer room wall shall be of one hour fire resistive construction. All doors to the computer room shall be one hour labeled assemblies and maintained self-closing or automatic closing.

3. The raised computer room floor shall be approved non-combustible tiles.

4. Emergency electrical disconnects shall be provided near all doors from the computer room. The electrical disconnects shall be provided with a sign stating: "EMERGENCY ELECTRICAL DISCONNECTS". The sign shall have 1" high letters.

5. Air handling equipment for computer rooms shall be separate from system used for other sections of the building.

6. Emergency lighting shall be provided for all computer rooms.

7. All other provisions of NFPA Standard #75 shall be complied with.

/fl

ADDRESS ALL MAIL TO: P.O.BOX 60607 ☐ SUNNYVALE, CALIFORNIA 94088
For deaf access, call TDD/TTY (408) 738-5509

FIGURE A.1.3

CITY OF SUNNYVALE

GUIDELINES TO BE USED TO DEFINE A COMPUTER ROOM

CITY OF SUNNYVALE CALIFORNIA

Telephone (408)730-7212

NFPA #75 COMPUTER ROOM DETERMINATION

The following questions shall be answered by the proposed occupant for determination of computer room requirements (NFPA #75, 1981 Edition).

1. Is this equipment important? Would the loss of this equipment simply be inconvenient or would it's loss be vital to business life?

2. Does this equipment need special construction? Does the manufacturer require the computers to be housed in a special environment for temperature, humidity, or dust control?

3. What is the exposure to the equipment? Briefly describe the uses of rooms surrounding the computer room area.

Answers to these questions shall be on the proposed occupants letterhead stationery and signed by a principal officer of the firm.

If additional information is desired, telephone the undersigned at 730-7212.

R. Grijalva, Jr.

Ruben D. Grijalva, Fire Marshal
Fire Prevention Bureau

/b7

ADDRESS ALL MAIL TO: P.O.BOX 60607 □ SUNNYVALE, CALIFORNIA 94088
For deaf access, call TDD/TTY (408) 738-5509

FIGURE A.1.4

CITY OF SUNNYVALE

SMOKE DETECTION AT H.V.A.C.

FACILITY DESIGN
SEP 13 1989
ENGINEERING

September 13, 1989

SMOKE DETECTION AT H.V.A.C.

The City's policy on 1009(A) of the 1985 UMC is as follows:

1) Smoke detection is required at return air in all systems serving A-1, A-2, A2.1, B-2, E, I and R-1 when CFM exceeds 2000 C.F.M.

2) During tenant improvements, regardless of area or cost of remodel, the HVAC systems which fall under Item 1 shall be upgraded if any modification to existing system occurs. The modifications shall include relocation of unit, new unit, increasing size of ducts, modifying unit, installing in line vav boxes, all H occupancy modifications including duct extentions to HVAC systems, all duct servicing corridors shall be upgraded when modified in any way, register relocations when installed, relocated or new at 1 hr. ceiling assemblies and any modification of package units rated at 50 tons or more.

Hamid Pouya P.E.
Hamid Pouya, Acting Building Supervisor

ADDRESS ALL MAIL TO: P.O. BOX 3707 SUNNYVALE, CALIFORNIA 94086-3707
For deaf access, call TDD/TTY (408) 730-7501

FIGURE A.1.5

LMSSC ROOF SCREENING REQUIREMENT MATRIX

PLANT	BLDG. LOCATION	HEIGHT EQUIP, DUCT, PIPES OVER 16" DIA. EXTENDS ABOVE ROOF SCREEN OR PARAPET	SCREENING PROVIDED	PAINT EQUIP.	PERMIT REQUIRED	INFO. REQUIRED ON DRAWINGS
1	Any	0	No	No	Building Permit	Roof Plan, Bldg. Section with equipment
1	Less than 600' from public rd.	Any height	No	Yes	Administrative Use Permit*	Bldg. Elevation(s)
1	Less than 600' from public rd.	Any height	Yes	No	Building Permit	Bldg. Elevation(s)
1	More than 600' from public rd.	Less than 5'	No	Yes	Building Permit	Bldg. Section, Bldg. Elevation(s)
1	More than 600' from public rd.	More than 5'	No	Yes	Miscellaneous Plan Approval*	Bldg. Elevation
5	Any	0	No	No	Building Permit	Bldg. Section w/equipment
5	Any	More than 0'	Yes	No	Building Permit	Bldg. Section, Bldg. Elevation(s)
2	Any	Any height	Yes	Yes **	ARB staff approved, Building Permit*	Plans & elevations Bldg. Section

NOTES:

1. In Sunnyvale, single pieces of equipment under 16 in. dia. need not be screened but must be painted. Verify amount of existing equipment under 16 in. dia. for the City.
2. The Plant 1 Master Use Permit supercedes these requirements in Sunnyvale. Refer to Use Permit #5289, Sunnyvale Municipal Code Sect. 19.46.020 and .030, City of Sunnyvale policy letter dated June 9, 1986, and Palo Alto Municipal Code Sect. 16.48.

* Photographs and drawings may alleviate roof screening requirements if low visibility is demonstrated.

** Refer to Equipment Roof Screening Study No. 91-03 in LMMS Records Control Center.

APPENDIX B
INFORMATION FOR ARCHITECTURAL/ENGINEERING (A/E) FIRMS

B.1 GENERAL

1. Lockheed Martin Space Systems (LMSSC) business hours are 7:30 AM to 4:15 PM, Monday through Friday.

2. Facility Engineering Office Information:

   a. Location: First Floor, Building 041, Sunnyvale

   b. Primary Telephone Number to Contact: LMSSC Project Engineer

   c. Secondary Telephone Number: (408)_____(Department Secretary)

   d. Mailing Address:
      Lockheed Martin Space Systems
      P.O. Box 3504
      O/45-14, Building 041
      Sunnyvale, CA 94089-3504

3. All badging of the A/E's personnel will be arranged through the LMSSC Contract Administrator, General Procurement, First Floor, Building 041.

4. LMSSC Facility Engineering Standards (FES), Construction Specifications Volumes I through IV, latest editions should be obtained from the LMSSC Contract Administrator.

5. Existing structural calculations and soil reports, if available, may be obtained through the LMSSC Project Engineer, and must be requested in writing.

6. In order to use the time of LMSSC Project Engineers effectively, A/E firms are required to be familiar with LMSSC documentation procedures and prepare documentation and forms required for LMSSC procedures. This includes but is not limited to the following:

   a. Formal transmittals for all requested vellums and record information, required at the time of request.

   b. Request For Information (RFI) forms for every question requiring in-house research and coordination.

   c. Title sheet requests accompanied by fully marked-up facsimiles of the LMSSC title sheet. All required information must be researched and filled in.

   d. Complete specifications and supplemental specifications in LMSSC format, including the Requirements/Specifications form, title sheet and table of contents.

e. Written analyses of detailed estimates exceeding project ROM estimates by more than 15%.

f. Preparation of all Addenda in LMSSC format and compilation of Contractor's questions with answers.

g. Verification of LMSSC Architectural Review Board (ARB) meeting times and completed "Submittal Request Form" and required documentation (see Appendix F) for ARB review, at least two weeks prior to the scheduled meeting. Presentation of the project at the ARB meeting.

h. Preparation for City Express Plan Check, including:

(1) All required stamped and signed plans and specifications.

(2) Copies of all applicable City Meeting Minutes.

(3) Building Supplement Record Form. See figure B.1.

i. Plan Check/Permit Application Notification Information Form, listing plan check number, plan check and permit fees. See figure B.2.

j. Preparation of all construction Change Orders on LMSSC standard forms.

7. LMSSC Records Control Information

a. All work shall be CAD generated when possible and conform to Section 11, Drawing Procedures and Appendix D, CAD Drawing Standards of this document.

b. Provide appropriate number of formatted 5-1/4 inch diskettes.

c. When manual drafting is approved, work should be done on existing LMSSC drawings when possible. New drawings should be generated only when necessary and only when approved by the LMSSC Project Engineer.

d. All new manual A/E drawings shall be drawn on LMSSC vellums. Obtain blank vellums from the LMSSC Project Engineer.

e. Checking out of LMSSC record vellums must be done through your LMSSC Project Engineer. All drawings checked out must have Sepias or the originals returned to the Records Control Center within five days.

f. The Records Control Center is located on the First Floor of Building 041 where a Microfiche Reader can be used for reference in choosing actual drawings (reproducible hard copies from this machine are available). Contact your LMSSC Project Engineer for instructions on the Microfilm Reader.

8. Meetings with the City of Sunnyvale

   a. Weekly meetings are held between the City of Sunnyvale Building and Fire Department officials and LMSSC. The meetings are on every Tuesday, starting at 2:00 PM, at the Sunnyvale City Hall. If the A/E firm would like to present a project or ask questions regarding code compliance, etc., contact your LMSSC Project Engineer to make an appointment to attend these meetings.

   b. The A/E is also free to contact the City at any other time at their convenience. The approval of the LMSSC Project Engineer, however, must be obtained prior to these meetings, with all agreements, non-agreements, etc., documented.

   c. Within 48 hours of any City meeting or communication with the City, the A/E shall transmit minutes of the meeting in the standard City minute format. A/E firms are encouraged to enter City Minutes directly into the B/041 Macintosh network or to submit on disk in Claris MacWrite II format.

9. A/E Responsibility for Code Verification

   LMSSC requires comprehensive A/E services. A/E firms must validate all code interpretations with enforcement agencies. Furthermore, the A/E shall negotiate for code interpretations favorable to LMSSC. If LMSSC obtains a favorable interpretation after the failure of the A/E to ask for or obtain such an interpretation, required design changes shall be made at no cost to LMSSC.

10. LMSSC/City of Sunnyvale Code Agreements

    There are no “blanket agreements” on code interpretations. They are reviewed on a project-by-project basis. It is the responsibility of the A/E to meet with the City of Sunnyvale to clarify all building code requirements for each project.

    The City has clarified its interpretation of various code issues. These clarifications are itemized in Appendix A. City interpretations are subject to change and further clarification.

11. Photographing by the A/E is not permitted at LMSSC. LMSSC photographers can be arranged through the LMSSC Project Engineer. One week advance notice is required. The A/E must provide personnel to direct the photographer to take the correct photographs on the site. All photographs are to remain the property of LMSSC.

12. No cameras, recorders, pagers, or any other type of electronic equipment are allowed on LMSSC property.

END OF APPENDIX B

FIGURE B.1

Building Supplement Record Form

REQUEST FORM

for

BUILDING SUPPLEMENT RECORD

The following information is required to complete the BSE for your new project. Please complete all information

1. Project name, include building number _____
2. Project engineer _____
3. Building Number _____
4. R.N. number _____
5. Project cost _____
6. Building gross square footage _____ Change in square footage _____
7. Building footprint square footage _____ Change in square footage _____
8. Office space square footage _____ Change in square footage _____
9. Exterior storage square footage _____ Change in square footage _____
10. Manufacturing square footage _____ Change in square footage _____
11. Warehouse square footage _____ Change in square footage _____
12. Other square footage _____ Change in square footage _____
13. Estimated number of employees _____
14. Date _____
15. Revision number _____
16. Assessor's parcel number _____

Completed _____

FIGURE B.2

Plan Check/Permit Application Notification Information Form

INTERDEPARTMENTAL COMMUNICATION

TO: Janice Brady **ORG:** 45-13 **BLDG.** 509 **DATE:** _____

FROM: _____ **ORG:** 45-__ **BLDG.** 509 **EXT:** _____

SUBJECT: PLAN CHECK/PERMIT APPLICATION NOTIFICATION

PLAN CHECK NUMBER: _____ ER NUMBER: _____

BUILDING NUMBER: _____

PROJECT TITLE: _____

PERMIT TYPE: (EXPRESS, REGULAR PLAN CHECK, USE PERMIT, OTHER) _____

DATE SUBMITTED FOR PERMIT: _____ DATE PERMIT EXPECTED: _____

DATE PERMIT ACTUALLY RECEIVED: _____

PROJECT ENGINEER: _____

BUILDING SUPPLEMENT RECORD NUMBER: _____

CONTRACTOR: _____

EXPECT 1ST COMMENT: _____ RECEIVED 1ST COMMENT: _____

DATE 1ST COMMENT RETURNED TO CITY: _____

EXPECT 2ND COMMENT: _____RECEIVED 2ND COMMENT: _____

DATE 2ND COMMENT RETURNED TO CITY: _____

EXPECT 3RD COMMENT: _____RECEIVED 3RD COMMENT: _____

DATE 3RD COMMENT RETURNED TO CITY: _____

PLAN CHECK FEE: $_____ CITY IN WHICH PERMIT ISSUED: _____

TOTAL PERMIT FEE: $_____

COMMENTS: _____

_____

_____

APPENDIX C
INTERIOR SPACE GUIDELINES

NOT ISSUED/CURRENTLY BEING UPDATED
(Contact Facility Development, Organization 45-14)

APPENDIX D
CAD Guidelines

1.1 Purpose

The purpose of this appendix is to provide the guidelines necessary to create construction and as-built CAD drawings in a manner that produces a consistent and uniform set of drawings. Additionally it facilitates the future modification of these same drawings and minimizes the integration effort required to incorporate these drawings into the LMS Facilities' master as-built drawing databases. LMS Contractors and LMS Facility Operations & Services (FO&S) are required to create CAD drawings according to the following guidelines and those provided in Section 11 of the Design Standards.

1.2 CAD System

The preferred CAD system is AutoCAD. Contact the FEDS group for information on the acceptable releases of AutoCAD. All LMS FO&S Engineers will utilize the AutoCAD application provided and configured by Facility Controls group to create drawings. LMS Contractors may generate drawings in other CAD systems; however, submittals of construction and as-built drawings to LMS shall be in AutoCAD format. All CAD files of as-built drawings must conform to the file set-up and layering conventions discussed throughout the following sections. CAD files of Issued for Construction (IFC) drawings do not need to comply with these guidelines but the files need to be readable and in AutoCAD format.

1.3 CAD File IDs and Drawing Numbers

A. CAD file IDs shall be according to Section 2.10, CAD File Naming Convention.
B. Drawing numbers shall conform to Figure 1.1, Title Block Drawing Number Convention.
C. Drawings such as IFC, demolition, reference sheets, etc. do not require standard drawing numbers. Use a temporary drawing number that may conform to Figure 1.1 or Construction Specification Institute (CSI) sheet numbering system.

1.4 Symbols and Cross Referencing in as-built Drawings

A. Use LMS standard drawing-symbols and legends, Figures 11.10 through 11.17 of the Design Standards. AutoCAD blocks of these symbols can be obtained when available by contacting the Facility Controls group.
B. When cross referencing on drawings such as plan drawings to non-plan drawings regarding details, sections and others, use the 5 character sequence number of the drawing numbers (i.e. 001AM). Do not use Temp IDs for referencing purposes. This requirement applies to as-built drawings only. Construction drawings may be treated as seen fit by the creator of the drawings. However, keep in mind that drawings qualified to become the as-built set must comply with these requirements.

1.5 Ownership of Electronic Drawing Files and Hard Copy Drawings

All drawings in electronic or hardcopy format, existing and new, shall remain or become the property of LMS. Any copies retained shall not be reproduced or released to persons outside LMS without the written authorization of LMS. In support of this statement, all drawings shall use the latest LMS Facility's Drawing Title block, which contains the latest modifications to the "Statement of Controls and Authority".

1.6 Required Drawings

A. Construction Drawings
Submit a soft copy set of the latest revision of the "Issued for Construction" drawings, in their original issued condition. These drawing do not need to comply with Appendix D guidelines however they shall be in a readable and workable condition. External references, if used, must remain intact and all references must be included in the submittal. All third party fonts and other electronic resources such as referenced drawings used to generate these drawings shall be included in the submittal, as well. AutoCAD's Pack&Go or Etransmit option is a preferable method of collecting and submitting these drawings to LMS.

B. As-Built Drawings
Submit a complete set of as-built drawings with all field as-built red-lines incorporated. These drawings shall be in compliance with Section 11 and Appendix D of the Design Standards. Refer to section 11 of the Design Standards for the project categories, description and requirements.

1.7 Submittal Process

CAD files shall be submitted to the LMS Facility Controls group. CAD files shall be submitted only when LMS Facility Engineering review of the as-built plots is complete and plots have been approved. CAD files must include all changes made to the drawings from the results of the engineering review.

1.8 Cad Engineering

Cad Engineering is part of Enterprise Strategy and Development. Any questions regarding the content of Appendix D shall be forwarded to one of the following members. Any requests for drawings and other documents shall be forwarded via phone or email to Bert Palmon. Requests will be scheduled to the next available member.
The list is sorted by contact order.

Bert Palmon	(408) 756-1059 Bert.Palmon@lmco.com
Sergio Segura	(408) 756-4761 sergio.e.segura@lmco.com

TITLE BLOCK
DRAWING NUMBER

	CAD FILE # FOR CAD FILE NUMBER SEE SECTION 2.10	
SH 2 OF 5	DWG. NO. **156-8-305EP-023-2**	REV 3

DESIGNATES BUILDING NUMBER. USE LETTER FOR BLDGS. WITH AN ALPHA (I.E., 195D) FOR CIVIL DRAWINGS, USE PL1 FOR PLANT1, PL2 FOR PLANT 2 AND PL5 FOR PLANT 5.

DESIGNATES REVISION NUMBER TO CAD MASTER FILE OR PROJECT DWG. USE ALPHA FOR INTERNAL (LMMS & DURING DESIGN).
RELEASE (I.E., A, B)
USE NUMERIC FOR EXTERNAL (LMMS & ISSUED FOR BID)
RELEASE (I.E., 04_, 05_) OR CONTRACT RELEASE/ISSUED FOR BID (REV. 0)

DESIGNATES CAD SYSTEM USED. USE "9" FOR CADAM, "8" FOR AUTOCAD AND "1" FOR VELLUM.

IF MORE THAN ONE SHEET OF THE SAME TYPE OF DRAWING WAS CREATED, USE A NUMBER IN THIS FIELD TO REFLECT THE SHEET NUMBER.

DESIGNATES ASSIGNED CONTROL NUMBER. SEE PROJECT MANAGER (PM) FOR CONTROL NUMBER. NUMBERS ARE ASSIGNED BY BUILDING AND CROSS REFERENCED TO THE ER NUMBER ON THE MASTER LOG. THIS NUMBER STAYS WITH THE PROJECT THROUGHOUT THE LIFE OF THE DESIGN (I.E., REQUIREMENTS THRU DESIGN).
"000" DESIGNATES A FACILITY RECORD DRAWING.

PLAN DWGS - THE FIRST NUMBER DESIGNATES FLOOR LEVEL (I.E., LEVEL 3) NOTE: A MEZZANINE IS CONSIDERED A LEVEL. A "9" WILL DESIGNATE THE ROOF LEVEL. THE NEXT TWO NUMBERS DESIGNATE THE AREA WITHIN THE BUILDING. (I.E., AREA 05). "00" DESIGNATES ENTIRE LEVEL (I.E., 100 = 1st FLR.) "XX" DESIGNATES MULTI AREA (COMPOSITE) DRAWINGS. "X1" DESIGNATES MORE THAN ONE SHEET. I.E., 156-9-3X1EP-023
156-9-3X2EP-023
FOR PROJECT DRAWINGS ONLY. NOT PRACTICED FOR AS-BUILT RECORD DRAWINGS.

NON PLAN DWGS - THESE THREE NUMBERS DESIGNATE THE SEQUENCE OF A NON PLAN DRAWING.

DESIGNATES DRAWING NAME FOR PRINTING AND SORTING. FIRST CHARACTER DESIGNATES DISCIPLINE.

I.E., A = ARCHITECTURAL
S = STRUCTURAL
G = CIVIL
I = INDUSTRIAL ENG. ETC.

SECOND CHARACTER DESIGNATES DRAWING TYPE.

I.E., 0 = BASE LINE FLOOR PLAN
P = ELECTRICAL POWER PLAN
C = ELECT. COMMUNICATION PLAN
Q = EQUIPMENT AND FURNITURE PLAN
M = MISC (NON PLAN DRAWINGS)

A THIRD CHARACTER MAY BE USED TO DESIGNATE DEMOLITION DRAWINGS.

I.E., 156-8-305EPD-023

FIGURE 1.1

2.1 As-Built CAD File Submittal Requirements

A. CAD files of all approved as-built drawings shall be submitted on a Compact Disc media readable by a Windows based PC. Macintosh and Unix media will not be accepted. At release time of these guidelines, email submittals are not permitted.
B. Label each media with the Building Number, Project ER Number and Project Title. (Example: B152, CER C47185, Major Modifications)
C. For projects with multiple building sites, group files onto separate media for each building and label each media accordingly.
D. The contents of drawings shall comply with the most recent edition of the Facility Engineering Design Standards, Section 11, Drawing Procedures.
E. AutoCAD Blocks shall be created in Layer "0" (zero) and names shall be descriptive so that they can be easily identified and re-used. Avoid the use of symbols such as (*,<>?"';:@%&$!{ } / \) in block names. Block names for the title blocks (borders) and standard symbol blocks must remain as is when obtained from LMS FEDS group. Do not explode or rename these blocks.
F. CAD file layering convention (Names and Contents) shall adhere to Section 5.0, CAD Layering guidelines. Since the AIA CAD layering system is used, to the extent of compatibility with the LMS facilities CAD database, any additional required layer shall be selected from the "AIA CAD layering guidelines" and approved by FEDS group prior to use on as-built drawings.
G. External referencing and the use of paper space environment are prohibited in as-built drawings but acceptable in construction drawings.
H. All AutoCAD files shall be saved with AutoCAD's original ACAD.MNU.
I. Third party fonts shall not be used on submitted as-built drawing files.
J. Avoid the use of symbol characters, such as the ones shown in section 2.1.E above, in naming of text and dimension styles. Use the underscore character if a space is needed in style names for the purpose of clarity.

2.2 Issued For Construction CAD File Submittal Requirements

A. CAD files of all Issued For Construction drawings shall be submitted on a Compact Disk media readable by a Windows based PC. Macintosh and Unix media will not be accepted. At release time of these guidelines, email submittals are not permitted.
B. Label each media with the Building Number, Project ER Number and Project Title. (Example: B152, ER C44622, Major Modifications)
C. For projects with multiple building sites, group files onto separate media for each building and label each media accordingly.
D. CAD files may contain XREFs and other referenced material such as bitmaps and such, in this case all reference materials shall be submitted along with the actual issued for construction drawings. The users have the option of using AutoCAD's XREF-Bind and manually copying other files onto the media or AutoCAD's Pack&Go or Etransmit commands to satisfy this requirement.
E. All submittals shall contain a project cover sheet that shows an accurate list of all drawings in the package by ID, Title and Revision number. This cover sheet will be used to insure that all drawings are accounted for.

2.3 Drawing Number

All drawing numbers shall be according to Figure 1.1, Title Block Drawing Number.

2.4 Units

Architectural units shall be used for all drawings except for the civil plans.

2.5 Area Size

This section does not apply to construction drawings.
A floor plan shall cover the size of an area of a building that is shown on the building key plan. Exceptions to this case would be the floor plan drawings of Mechanical Controls and ACAS and roof plan drawings of all disciplines. A building with multiple areas require a key plan on all plan drawings.

2.6 Use of Revision Clouds

Use revision clouds on all as-built drawings. A revision cloud must be drawn around the area of work and all the associated as-built notes and objects elsewhere on the drawing.

2.7 Revision Numbers

As-built drawings contain a revision history. Revision number shall be 0 for all new drawings. Revision number on drawings obtained from FEDS that have existing revision numbers shall be the next available number. Do not delete the previous revision numbers and project information from the revision block.

2.8 Building Start Points

All building floor plan CAD files have a set insertion point. This insertion point is "0,0,0" at the crossing of the grid line to the most left and the grid line at the most bottom part of the building structure.

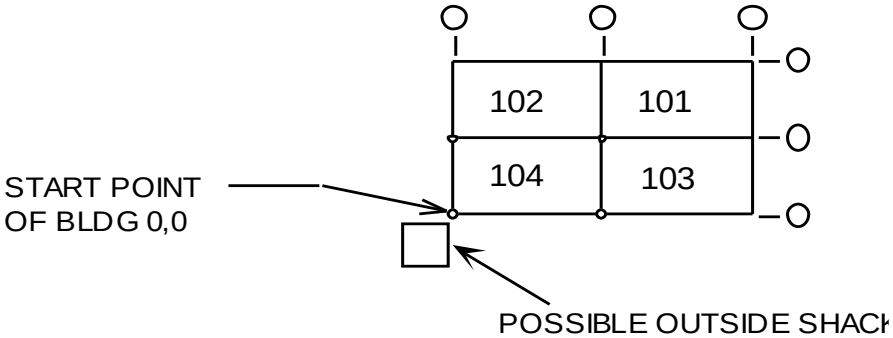

An exception is made for the Architectural roof plans of certain buildings in Plant 2 (Palo Alto). These CAD files have been spatially located with special coordinates to allow creation of a composite plant 2 site plan. Buildings 201, 202 and 220 are spatially located to each other. Buildings 204, 205 and 206 are spatially located to each other. All other buildings in Palo Alto are spatially located to the 0,0,0 as described in early part of this section.

2.9 Drawing Insertion Points for Individual Areas.

All floor plan CAD files of individual areas shall be spatially located to the building's start point of 0,0,0. An overall column grid system, referred to as "Building Locator", shall be used to spatially locate these individual drawings. The column numbers/grids of an individual area shall overlay the matching column numbers/grids of the building locator. Building Locator CAD files may be obtained by contacting FEDS.

2.10 CAD File ID Naming Convention for plan drawings

A. Floor Plan Drawings:
The following is the naming convention for an as-built floor plan drawing.

151101AR01-000-R10.dwg

This CAD file ID represents a revision 10 of the first sheet of Architectural Reflected Ceiling plan drawing for Area 01 on the First Floor of building 151. The "000" denotes that drawing to be an as-built drawing.

***The first three characters*, 151**

Represent the building number. Use **PL1** on drawings representing civil and utility site plans of Sunnyvale Plant 1 (on Architectural site plans, use the building number). Use **PL5** on drawings representing civil and utility site plans of Sunnyvale and other Santa Clara County plants covering leased buildings outside of the main plant 1. Use **PL2** on drawings representing civil and utility site plans of Palo Alto.

***The fourth character*, 1**

Represents the building floor/level number. Because of intermediate floors, some level numbers will not correspond to the floor numbers. Use "B" for basement level and "9" for roof level. All other levels in between "B" and "9" will use number 1 through 8. Each level will receive a number regardless of the size or usage of the level. A Mezzanine level between 1st and 2nd floor of a two story building will actually be called the 2nd level. Thus, the actual 2nd floor of the building will be referred to as the 3rd level. **For building 156G Hi-Bay section, use I-J-K&L for 9th, 10th and the 11and the Catwalk levels.**

***The fifth and the sixth characters*, 01**

Represent the area number (area numbers are taken from the key plan of the building. If a building is not broken up into areas, the area number shall be "00")

***The seventh character*, A**

Represents the discipline group to which this drawing belongs. Refer to section 3.0 for a complete listing of discipline codes and definitions.

***The eighth character*, R**

Represents the drawing type in the discipline group that this drawing was created for. Refer to section 4.0 for a complete listing of drawing type codes and descriptions.

***The ninth and tenth characters*, 01**

Represent the sheet number. At times, it is possible for a drawing to be broken up into multiple sheets due to the amount of data shown on it. For clarity purposes it is allowable for a drawing to be represented by multiple sheets. This option shall only be considered with prior approval from the LMS Facility Engineering and FEDS group.

***The eleventh, twelfth ,and thirteenth characters*, 000**

Represent the drawing's "CAD Control Number"(CCN). Master as-built drawings in FEDS's database have "000" as their CCN.
As-built drawings not yet entered into FEDS's Master database have a non-000 CCN in this field. CCNs are assigned by FEDS. These numbers, if other than 000, are associated with the project FMR or ER numbers.

***The remaining characters*, R10**

Represent the revision number of the file. A revision history is kept in the revision block of each drawing. Refer to sections 2.6 and 2.7 for more information.

2.11 Line Weights for AutoCAD Objects

Color	Pen #	Inches
Red	Pen 1	.05
Yellow	Pen 2	.1
Green	Pen 3	.15
Cyan	Pen 4	.2
Blue	Pen 5	.25
Magenta	Pen 6	.3
White	Pen 7	.35

2.12 Text Styles

AutoCAD's STANDARD text style shall be set to ROMANS for all notes. When a bolder text style is needed, use ROMANC.

2.13 Text Sizes

A. For **plan drawings**, regardless of the scale of the plotted drawing, **the text size shall be 8"** in Architectural units.

B. For **non-plan drawings**, the 8" text requirement is not enforced. The user may use any text size appropriate based on the scale of the details, sections, elevations so long as the text sizes are consistent on the plotted drawings.

3.0 DISCIPLINE Designation ID

LETTER DESIGNATION	DESCRIPTION
A	Architectural
B	ACAS
C	Controls (mechanical)
E	Electrical
F	Fire Protection
G	Civil Engineering – Topo Plans
H	Occupational Health & Safety
I	Industrial Engineering
K	Cranes
M	Mechanical
N	Networks and Telecommunications
P	Piping (Plumbing and Process Piping)
Q	Equipment Engineering
R	Resources/Reporting
S	Structural
T	Project Cover Sheet
U	Underground Utilities Not for future use. Only for purpose of reference to legacy drawings
V	Building Evacuation
Z	Site Master Planning

4.0 DRAWING TYPE Designation ID

LETTER DESIGNATION	DESCRIPTION
0 (ZERO)	***Primary floor plan:*** for all disciplines. ***Structural:*** First floor – Slab Plan Other floors - Framing Plan
1	***1 Line Diagram:*** Primarily used within Electrical discipline to represent the master building single line diagram drawing. This type of drawing requires a non-plan drawing number
A	***Electrical:*** Alarms and Emergency Notification System (ENS) ***Controls:*** Analog Elements ***Architectural:*** Site Plan ***ACAS:*** ACAS Coverage Above Ceiling
B	***Controls:*** Block & Logical Diagram ***Structural:*** Bottom Chord Plan ***ACAS:*** ACAS Coverage Below Ceiling
C	***Networks and Telecom:*** Communications/Voice & Datadrops ***Controls:*** Communication Trunk-Local Area Network ***ACAS:*** Public Address System ***Piping:*** Cryogenics
D	***Demolition / Removal:*** for all disciplines
E	***Elevation:*** for all disciplines ***Control:*** Emergency Process Alarm ***ACAS:*** ACAS Circuit Numbers Below Ceiling ***Architectural:*** Exterior Elevations ***Evacuation:*** Exiting Plan
F	***Structural:*** Foundation ***ACAS:*** Fences Access Control ***Industrial Engineering:*** Interior Finishes
G	***Electrical:*** Grounding ***Controls:*** Digital Elementary ***ACAS:*** ACAS Coverage Below Floor
H	***Industrial Engineering:*** Partitions (Not for future use. Only for reference purpose of legacy drawings)
I	***Structural:*** Intermediate Framing ***Architectural:*** Interstitial Plans ***Electrical:*** Interstitial Plans ***Mechanical:*** Interstitial Plans
J	***Industrial Engineering:*** Office Accessories (Not for future use. Only for reference purpose of legacy drawings) ***ACAS:*** Manual Fire Alarm Signaling System Plan
K	***Electrical:*** Sound Masking ***ACAS:*** ACAS Details
L	***Electrical:*** Lighting ***ACAS:*** Manual Fire Alarm Signaling System Riser Diagram ***Architectural:*** Interior Elevations ***Structural:*** Designed Live Load

M	***Misc./Details/Diagrams/Enlarged Plans:*** for all disciplines ***ACAS:*** Manual Fire Alarm Signaling System Details
N	***Information Systems:*** IWC Jack Layout ***ACAS:*** Sound Masking System
O	Not used
P	***Electrical:*** Power ***Piping:*** Instrumentation Process Piping-HVAC Chilled water piping ***Controls:*** Point to Point Wiring Schematics and Panel Layout Details ***ACAS:*** Closed Circuit Television System
Q	***Industrial Engineering:*** Partitions and Moveable Furniture and Equipment ***ACAS:*** Closed Circuit Television Details
R	***Architectural:*** Reflected Ceiling ***Controls:*** Ladder/Riser Diagram ***ACAS:*** Roof coverage ***Site:*** Roads and Parking (legacy drawings only)
S	***Schedules***: for all disciplines ***ACAS:*** Public Address Details ***Resources/Reporting:*** Space Allocation Recording/Reporting
T	***Title Sheet:*** for all disciplines
U	not used
V	***Electrical:*** Audio / Visual
W	not used
X	***Sections, Interior/Exterior:*** for all disciplines
Y	not used
Z	***Electrical:*** Secure / Classified Voice & Data

This area intentionally left blank.

5.0 CAD Layering Guidelines

All as-built CAD files submitted by LMS contractors for projects of Category 1 and 2 shall comply with this section. Issued for Construction drawings are not required to comply with this section. Layer Names are chosen from the CAD Layer Guidelines established by AIA. The layer names are limited to nine characters subdivided into three sections: Major, Minor and Modifier (as shown below in section 5.2).

5.1 Common Rules

A. Layer 0 (zero) shall remain empty at all times. This layer is used for creating blocks and is not intended to have permanent geometry stored in it.

B. All layer colors must be according to the layer guideline tables beginning with Section 5.3.

C. Layer 0-TBLK contains:
   1. Border lines of the drawing.
   2. Title block and all its information.
   3. Revision block and all its information.
   4. North arrow, key plan, graphic scale.

D. As-built drawings submitted by contractors shall not have XREF links. Therefore all layers are active layers of the same drawings.

E. Graphic indicators for text and notes (e.g., header line and arrowheads for a note) must be located on the same layer as the corresponding text.

F. Additional layer names, other than shown in the schedules below, can be used once a request has been submitted to FEDS group for approval.

5.2 Layer Name Structure

Nine Character Layer Name **X - XXXX - XXXX**

Major Group
Minor Group
Modifier

Major Group headings define the layer's discipline. Refer to section 3.0 for a listing of the disciplines and designated letters.

Minor Group headings define assemblies or construction systems such as walls, doors, ceilings or electrical power. Refer to sections 5.3.1 through 5.3.21.

Modifier headings further define the Minor Group headings such as NEW, DEMO, CONS, etc.

5.3.1 GENERAL LAYERS

These layers shall be created in all drawings as general layers of those drawings

Layer	Description	Color	Linetype
0-COL	Column bubbles and numbers/letters	Grey #8	Continuous
0-DIMS	Dimensions	Red	Continuous
0-GRID	Column Grid line only	Grey #8	Center
0-HTCH	Hatchings and Patterns	Varies	Continuous
0-IMAG	Imported Images/Pictures	——	——
0-NOTE	Notes and Call-outs directly associated to an object including Symbols, Targets and Titles	Red	Continuous
0-TEXT	General Notes, Specifications & header text	Red	Continuous
0-TBLK	Sheet Titles and Title Borders	Green	Continuous
0-VPRT	Viewports created in Paper Space	White	Continuous
0-REVS	Revision clouds and triangles for rev numbers	Cyan	Continuous
0-XREF	Contains Xrefed drawings	White	Continuous

5.3.2 ELEVATIONS, SECTIONS, DETAILS and SCHEDULE LAYERS

[* is replaced by the discipline code letter]

Layer	Description	Color	Linetype
	Elevations		
*-ELEV-FRAM	Penetrations and changes in plane of the elevation, outline of objects beyond	Green	Continuous
*-ELEV-OTLN	Building outline and ground line (use thick pline for ground line)	Blue	Continuous
*-ELEV-SURF	Surface features, joints	Yellow	Continuous
*-ELEV-HIDN	Hidden lines	Red	Dashed
	Sections		
*-SECT-MBND	Material beyond section cut	Green	Continuous
*-SECT-MCUT	Material cut by section	Blue	Continuous
*-SECT-PATT	Textures and hatch patterns	Varies	——
	Details		
*-DETL-MBND	Material beyond section cut	Green	Continuous
*-DETL-MCUT	Material cut by section	Blue	Continuous
*-DETL-PATT	Textures and hatch patterns	Varies	——
	Schedules		
*-SCHD-BLOK	Schedule blocks	Red	Continuous
*-SCHD-TEXT	Text placed inside the schedule blocks	Red	——
*-SCHD-PATT	Textures and hatch patterns	Red	——
	Diagrams		
*-DIAG-LINE	Components and connecting lines	Green	Varies
*-DIAG-TEXT	Text associated with components	Red	——
*-DIAG-PATT	Texture and hatch patterns	Red	——

5.3.3 ARCHITECTURAL FLOOR PLAN – A0:

Layer	Description	Color	Linetype

A-WALL-FULL	Walls to ceiling or structure above	White	continuous
A-WALL-PRHT	Walls that do not go the ceiling	Blue	Continuous
A-WALL-IDEN	Wall type symbol. Hatching & patterns within walls to graphically indicate basic wall type.	Red	Continuous
A-DOOR	Standard height man doors and roll-up doors	Green	Continuous
A-DOOR-IDEN	Door schedule symbols	Red	Continuous
A-GLAZ	Windows	Green	Continuous
A-GLAZ-IDEN	Window schedule symbols	Red	Continuous
A-FLOR-HRAL	Floor: handrail, guard rails	Red	Continuous
A-FLOR-STRS	Stairs, ramps, escalators, ladders	Green	Continuous
A-FLOR-RAIS	Raised floors	Red	Continuous
A-FLOR-EVTR	Elevators cars and equipment	Green	Continuous
A-FLOR-LEVL	Level Changes, ramps, pits, depressions	Red	Continuous
A-FLOR-TPTN	Toilet Partitions	Yellow	Continuous
A-FLOR-TRNC	Floor Trenches	#8	Dashed
A-FLOR-FIXT	Plumbing fixtures	Yellow	Continuous
A-FLOR-FENC	Fences installed within the building	Red	FENC
A-FLOR-WDWK	Built-in counters and casework	Yellow	Continuous
A-FLOR-PATT	Paving, tile, carpet, aisle way tape patterns	Red	----------
A-FLOR-IDEN	Room names and numbers	Red	Continuous
A-EQPM-FIXD	Fixed building equipment including wall mounted panels such as electrical, fire and alarm	Red	Continuous

5.3.4 ARCHITECTURAL ROOF PLAN – A0:

Layer	Description	Color	Linetype
A-ROOF	Ridge lines, crickets, drains, etc.	Red	Continuous
A-ROOF-OTLN	Face of parapet, penthouse, screens	White	Continuous
A-ROOF-LEVL	Level changes, back of parapet and screens	Blue	Continuous
A-ROOF-STRS	Stairs and ladders	Green	Continuous
A-ROOF-PNTR	Hatches, skylights, ventilators	Cyan	Continuous
M-HVAC	HVAC equipment ductwork and piping	Yellow	Continuous

5.3.5 ARCHITECTURAL REFLECTED CEILING PLAN – AR: (Use Architectural floor plan, Mechanical floor plan and Electrical Lighting plan as reference)

Layer	Description	Color	Linetype
A-WALL-DHED	Door headers	Green	Continuous
A-WALL-WHED	Window headers	Green	Continuous
A-CLNG-BRAC	Ceiling seismic bracing	Cyan	Continuous
A-CLNG-GRID	Ceiling grid	Green	Continuous
A-CLNG-OPEN	Ceiling penetration	Green	Continuous
A-CLNG-SUSP	Ceiling suspended elements	Yellow	Continuous

5.3.6 ACAS COVERAGE ABOVE CEILING – BA: (Use Architectural floor plan as reference)

Layer	Description	Color	Linetype

B-ALRM-COMP	Alarm components. Duct traps, and area termination cabinets.	Green	Continuous
B-ALRM-NOTE	General notes	Red	Continuous
B-ALRM-ZONE	Zones and area designations.	Green	Continuous
B-ALRM-WIRE	Wire and conduit requirements.	Yellow	Continuous
B-ALRM-CIRC	Circuit numbers above ceiling	Yellow	Continuous

5.3.7 ACAS COVERAGE BELOW CEILING- BB: (Use Architectural floor plan as reference)

Layer	Description	Color	Linetype
B-ALRM-COMP	Alarm components. Duct traps, and area termination cabinets.	Green	Continuous
B-ALRM-NOTE	General notes	Red	Continuous
B-ALRM-ZONE	Zones and area designations.	Green	Continuous
B-ALRM-WIRE	Wire and conduit requirements.	Yellow	Continuous
B-ALRM-CIRC	Circuit numbers above ceiling	Yellow	Continuous

5.3.8 ACAS COVERAGE ON ROOF – BR: (Use Architectural floor plan as reference)

Layer	Description	Color	Linetype
B-ALRM-COMP	Alarm components. Duct traps, and area termination cabinets.	Green	Continuous
B-ALRM-NOTE	General notes	Red	Continuous
B-ALRM-ZONE	Zones and area designations.	Green	Continuous
B-ALRM-WIRE	Wire and conduit requirements.	Yellow	Continuous
B-ALRM-CIRC	Circuit numbers above ceiling	Yellow	Continuous

5.3.9 ACAS COVERAGE BELOW FLOOR – BG: (Use Architectural floor plan as reference)

Layer	Description	Color	Linetype
B-ALRM-COMP	Alarm components. Duct traps, and area termination cabinets.	Green	Continuous
B-ALRM-NOTE	General notes	Red	Continuous
B-ALRM-ZONE	Zones and area designations.	Green	Continuous
B-ALRM-WIRE	Wire and conduit requirements.	Yellow	Continuous
B-ALRM-CIRC	Circuit numbers above ceiling	Yellow	Continuous

5.3.10 ACAS DETAILS - BK:

Layer	Description	Color	Linetype
B-ALRM-DETL	Specific component details and related notes	Green	Continuous
B-ALRM-LINE	Component one line diagram and related notes	Blue	Continuous
B-ALRM-DIAG	Component wiring diagram and related notes	Magenta	Continuous

5.3.11 MANUAL FIRE ALARM SIGNALING SYSTEM - BJ: (Use Architectural floor plan as reference)

Layer	Description	Color	Linetype

B-FIRE-COMP	Components	Green	Continuous
B-FIRE-NOTE	General notes	Red	Continuous
B-FIRE-ZONE	Zones and area designations.	Green	Continuous
B-FIRE-WIRE	Wire and conduit requirements.	Yellow	Continuous
B-FIRE-CIRC	Circuit numbers above ceiling	Yellow	Continuous

5.3.12 MANUAL FIRE ALARM SIGNALING SYSTEM RISER DIAGRAM – BL:

Layer	Description	Color	Linetype
B-FIRE-LINE	Component one line diagram and related notes	Green	Continuous
B-FIRE-RISR	System risers and related notes	Blue	Continuous
B-FIRE-DIAG	Component wiring diagram and related notes	Magenta	Continuous

5.3.13 MANUAL FIRE ALARM SIGNALING SYSTEM DETAILS – BM:

Layer	Description	Color	Linetype
B-FIRE-DETL	System specific details and related notes	Green	Continuous

5.3.14 SOUND MASKING SYSTEM - BN: (Use Architectural floor plan as reference)

Layer	Description	Color	Linetype
B-MASK-COMP	Components	Green	Continuous
B-MASK-NOTE	General notes	Red	Continuous
B-MASK-ZONE	Zones and area designations.	Green	Continuous
B-MASK-WIRE	Wire and conduit requirements.	Yellow	Continuous
B-MASK-CIRC	Circuit numbers above ceiling	Yellow	Continuous

5.3.15 CLOSED CIRCUIT TELEVISION SYSTEM - BP:(Use Architectural floor plan as reference)

Layer	Description	Color	Linetype
B-CCTS-COMP	Components	Green	Continuous
B-CCTS-NOTE	General notes	Red	Continuous
B-CCTS-ZONE	Zones and area designations.	Green	Continuous
B-CCTS-WIRE	Wire and conduit requirements.	Yellow	Continuous
B-CCTS-CIRC	Circuit numbers above ceiling	Yellow	Continuous

5.3.16 CLOSED CIRCUIT TELEVISION SYSTEM DETAILS – BQ:

Layer	Description	Color	Linetype
B-CCTS-DETL	System specific details and related notes	Green	Continuous

5.3.17 PUBLIC ADDRESS SYSTEM – BC: (Use Architectural floor plan as reference)

Layer	Description	Color	Linetype
B-PAS-COMP	Components	Green	Continuous
B-PAS-NOTE	General notes	Red	Continuous
B-PAS-ZONE	Zones and area designations.	Green	Continuous
B-PAS-WIRE	Wire and conduit requirements.	Yellow	Continuous
B-PAS-CIRC	Circuit numbers above ceiling	Yellow	Continuous

5.3.18 PUBLIC ADDRESS SYSTEM DETAILS – BS:

Layer	Description	Color	Linetype
B-PAS-DETL	System specific details and related notes	Green	Continuous

5.3.19 FENCES' ACCESS CONTROL SYSTEM – BF: (Use Architectural floor plan as reference)

Layer	Description	Color	Linetype
B-FENC-COMP	Components	Green	Continuous
B-FENC-NOTE	General notes	Red	Continuous
B-FENC-ZONE	Zones and area designations.	Green	Continuous
B-FENC-WIRE	Wire and conduit requirements.	Yellow	Continuous
B-FENC-CIRC	Circuit numbers above ceiling	Yellow	Continuous

5.3.20 SITE CIVIL PLAN-G0 (these layers are also used in Architectural building site plans)

Layer	Description	Color	Linetype
G-BLDG	Footprint of Buildings / overhangs (dashed)	White	Continuous
G-PKNG-STRP	Parking lot striping, handicapped symbol, wheel stops	Yellow	Continuous
G-PKNG-NOTE	Parking lot notes	Red	Continuous
G-ROAD-CNTR	Roads center lines	Red	Center
G-ROAD-CURB	Face of curb,	Green	Continuous
G-ROAD-PAVE	Back of curb, line of gutter,		
G-ROAD-NOTE	Road and street notes and names	Red	Continuous
G-RAMP	All Ramps including handicap and docking areas	White	Continuous
G-SFEDS-CULV	Culverts headwalls, drainage inlets	Red	Continuous
G-SFEDS-IDEN	Storm sewer system annotation	Red	Continuous
G-SFEDS-DTCH	Drainage ditches	Green	Dashed
G-SFEDS-FIXT	Storm drainage surface Features (catch basins, manholes)	Green	Continuous
G-TOPO	Contour Lines, Elevations and associated notes	#8	Phantom
G-PROP	Property Lines including bearing, distance and associated notes	12	Phantom
G-COMM	Site communication/telephone poles, boxes, towers	Red	Continuous
G-WATR	Domestic water-manholes, pumping stations, storage tanks and associated notes	Green	Continuous
G-FIRE	Fire protection-hydrants, connections and associated notes	Green	Continuous
G-NGAS	Natural gas-manholes, meters, storage tanks and associated notes	Green	Continuous
G-SSWR	Sanitary sewer-manholes, pumping stations and associated notes	Green	Continuous
G-FENC	Fencing	Red	Fenceline 2
G-DECK	Decks	Green	Continuous
G-WALL	Walls	Blue	Continuous
G-WATR	Site water features, rivers, streams, ponds, Bay coastlines and associated notes	Red	Continuous
G-WALK	Edge of concrete walks, steps	Green	Continuous
G-ELEC-FIXT	Parking lot light poles, outside generators and similar objects	White	Continuous

5.3.21 Electrical Communication plan-EC: (Use Architectural floor plan as reference)

Layer	Description	Color	Linetype
E-COMM-****	Telephone and communication outlets	Green	Continuous
E-DATA-****	Data outlets	Green	Continuous
E-SOUN-****	Sound and PA systems	Green	Continuous
E-CCTV-****	Closed circuit TV	Green	Continuous

**** = Modifiers used from the list below

Modifiers for the above

Layer	Description	Color	Linetype
E-****-CIRC	Circuit information	Red	Continuous
E-****-IDEN	Identification text	Yellow	Continuous
E-****-EQPM	Equipment and devices	Blue	Continuous
E-****-NUMB	Numbers for systems	Yellow	Continuous

5.3.22 ELECTRICAL LIGHTING PLAN – EL: (Use Architectural floor plan as reference)

Layer	Description	Color	Linetype
E-LITE-SPCL	Special Lighting	Green	Continuous
E-LITE-EMER	Emergency Lighting	Blue	Continuous
E-LITE-CLNG	Ceiling-mounted Lighting	Green	Continuous
E-LITE-FLOR	Floor-mounted Lighting	Blue	Continuous
E-LITE-WALL	Wall-mounted Lighting	Cyan	Continuous
E-LITE-SWCH	Lighting Switches	Green	Continuous
E-LITE-EXIT	Exit Lighting	Red	Continuous
E-LITE-NUMB	Lighting Circuit Numbers	Red	Continuous
E-LITE-WIRE	Lighting wiring and conduit	Red	Center

5.3.23 ELECTRICAL POWER PLAN – EP: (Use Furniture and Partition plan as reference)

Layer	Description	Color	Linetype
E-POWR-WALL	Power wall Receptacles	Green	Continuous
E-POWR-CLNG	Power Ceiling Receptacles and Devices	Blue	Continuous
E-POWR-PANL	Power Panels	Blue	Continuous
E-POWR-EQPM	Power Equipment-includes outlines of equipment shown in other disciplines	Green	Continuous
E-POWR-WIRE	Power wiring and conduit	Red	Center
E-POWR-MISC	Power Switchboards, Raceways, Cable Trays, Feeders and Bus-ways, transformers, equipment disconnect switches	Green	Continuous
E-POWR-NUMB	Power Circuit Numbers	Red	Continuous

5.3.24 ELECTRICAL GROUNDING PLAN – EG: (Use Architectural floor plan as reference)

Layer	Description	Color	Linetype
E-GRND-CIRC	Ground system circuits	Blue	Continuous
E-GRND-REFR	Reference ground system	Blue	Continuous
E-GRND-EQUI	Equipment ground system	Blue	Continuous
E-GRND-DIAG	Ground system diagram	Green	Continuous

5.3.25 FIRE PROTECTION PLAN – F0 (Use Architectural floor plan as reference)

Layer	Description	Color	Linetype
F-HALN-PIPE	Halon System Piping and associated notes	Green	Continuous
F-HALN-EQPM	Halon Equipment and associated notes	Cyan	Continuous
F-HALN-SPHD	Halon Spray Heads and associated notes	Red	Continuous
F-PROT-EQPM	Fire System Equipment (Fire Hose Cabinet, Extinguishers) and associated notes	Green	Continuous
F-PROT-ALRM	Fire Alarm and associated notes	Green	Continuous
F-PROT-SMOK	Smoke Detectors or Heat Sensors and associated notes	Red	Continuous
F-SPRN-SPHD	Fire Protection Sprinkler Head	Green	Continuous
F-SPRN-PIPE	Fire Protection Sprinkler Piping and associated notes	Green	Continuous
F-STAN-PIPE	Fire Protection Standpipe Piping and associated notes	Cyan	Continuous
F-STAN-EQPM	Fire Protection Standpipe Equipment and associated notes	Green	Continuous

5.3.26 HAZARDOUS MATERIAL MANAGEMENT PLANS – H0 (Use Architectural floor plan as reference)

Layer	Description	Color	Linetype
H-HMMP-SYMB	Hazmat symbols	Green	Continuous
H-HMMP-TEXT	Hazmat associated text	Red	Continuous

5.3.27 MECHANICAL CONTROLS – C0 (Use Mechanical floor plan as reference)

Layer	Description	Color	Linetype
C-CONT-THER	Controls-thermostats and associated notes	Magenta	Continuous
C-CONT-WIRE	Controls-low voltage wiring and associated notes	Magenta	Continuous

This drawing references the Architectural floor plan and the Mechanical HVAC plan drawings (layer colors shall be color number 8)

5.3.28 MECHANICAL HVAC PLAN – M0 (Use Architectural floor plan as reference)

Layer	Description	Color	Linetype
M-DUCT-SUPL	HVAC system supply ductwork and associated notes	Green	Continuous
M-DUCT-RTRN	HVAC system return ductwork and associated notes	Red	Continuous
M-DUCT-EXHS	HVAC system exhaust ductwork and associated notes	Cyan	Continuous
M-DUCT-OTHR	HVAC system other ductwork and associated notes	Yellow	Continuous
M-EXHS-EQPM	Exhaust system equipment and associated notes	Red	Various
M-HVAC-SDFF	Supply diffusers and associated notes	Blue	Continuous
M-HVAC-RDFF	Return diffusers and associated notes	Blue	Continuous
M-HVAC-EQPM	HVAC equipment and associated notes	Cyan	Various

5.3.29 MECHANICAL PIPING PLAN – MP: (Use Architectural floor plan as reference)

Layer	Description	Color	Linetype
M-CWTR-EQPM	Chilled water equipment and associated notes	Blue	Continuous

M-CWTR-SUPL	Cold water supply lines and associated notes	Cyan	Continuous
M-CWTR-RTRN	Cold water return lines and associated notes	Cyan	Continuous
M-HWTR-EQPM	Hot water equipment and associated notes	Green	Continuous
M-HWTR-SUPL	Hot water supply lines and associated notes	Red	Continuous
M-HWTR-RTRN	Hot water return lines and associated notes	Red	Continuous

5.3.30 PLUMBING PLAN – P0: (Use Architectural floor plan as reference)

Layer	Description	Color	Linetype
P-ACID-PIPE	Acid, Alkaline and Oil Waste piping and associated notes	Green	Continuous
P-DOMW-EQPM	Domestic Hot and Cold Water equipment and associated notes	Blue	Various
P-DOMW-HPIP	Domestic hot water piping and associated notes	Green	Continuous
P-DOMW-CPIP	Domestic cold water piping and associated notes	Green	Continuous
P-DOMW-RISR	Domestic hot and cold water risers and associated notes	Green	Continuous
P-SANR-PIPE	Sanitary piping and associated notes	Cyan	Continuous
P-SANR-FIXT	Plumbing fixtures and associated notes	Yellow	Continuous
P-SANR-FLDR	Floor drains and associated notes	Green	Continuous
P-SANR-RISR	Sanitary risers and associated notes	Red	Continuous
P-SFEDS-PIPE	Storm drain piping and associated notes	Red	Continuous
P-SFEDS-RFDR	Roof drains and associated notes	Magenta	Continuous

5.3.31 PROCESS PIPING PLAN – PP: (Use Architectural floor plan as reference)

Layer	Description	Color	Linetype
M-BRIN-EQPM	Brine system equipment and associated notes	Green	Continuous
M-BRIN-PIPE	Brine system piping and associated notes	Green	Continuous
M-CMPA-CEQP	Compressed air equipment and associated notes	Cyan	Continuous
M-CMPA-CPIP	Compressed air piping and associated notes	Cyan	Continuous
M-CMPA-PEQP	Process air equipment and associated notes	Cyan	Continuous
M-CMPA-PPIP	Process air piping and associated notes	Cyan	Continuous
M-FUEL-GPRP	Fuel gas process piping and associated notes	Yellow	Continuous
M-FUEL-GGEP	Fuel gas general piping and associated notes	Yellow	Continuous
M-FUEL-OPRP	Fuel oil process piping and associated notes	Yellow	Continuous
M-FUEL-OGEP	Fuel oil general piping and associated notes	Yellow	Continuous
M-MDGS-EQPM	Medical gas equipment and associated notes	Magenta	Continuous
M-MDGS-PIPE	Medical gas piping and associated notes	Magenta	Continuous
M-LGAS-EQPM	Laboratory gas equipment and associated notes	Red	Continuous
M-LGAS-PIPE	Laboratory gas piping and associated notes	Red	Continuous
M-NGAS-EQPM	Natural gas equipment and associated notes	Blue	Continuous
M-NGAS-PIPE	Natural gas piping and associated notes	Blue	Continuous
M-PROC-EQPM	Process equipment and associated notes	41	Continuous
M-PROC-PIPE	Process piping and associated notes	41	Continuous
M-REFG-EQPM	Refrigeration equipment and associated notes	241	Continuous
M-REFG-PIPE	Refrigeration piping and associated notes	241	Continuous
M-SPEC-EQPM	Special system equipment and associated	110	Continuous

	notes		
M-SPEC-PIPE	Special system piping and associated notes	110	Continuous
M-STEM-CONP	Steam systems condensate piping and associated notes	54	Continuous
M-STEM-EQPM	Steam systems equipment and associated notes	54	Continuous
M-STEM-LPIP	Low pressure steam piping and associated notes	54	Continuous
M-STEM-HPIP	High pressure steam piping and associated notes	54	Continuous
M-STEM-MPIP	Medium pressure steam piping and associated notes	54	Continuous
M-TEST-EQPM	Test Equipment and associated notes	181	Continuous

5.3.32 EQUIPMENT PLAN – Q0: (Use Architectural floor plan as reference)

Layer	Description	Color	Linetype
Q-QTLN	Equipment outline and associated notes	Blue	Continuous
Q-POWR	Power information and associated notes	Cyan	Continuous
Q-PIPE	Piping information and associated notes	Cyan	Continuous

5.3.33 SITE UTILITIES PLAN - U0 (uses the Site topo plan as reference)

Layer	Description	Color	Linetype
U-SFEDS	Storm drain pipes and all related notes	Red	Dashed
U-WATR	Domestic water pipes and all related notes	Yellow	Continuous
U-FIRE	Fire protection pipes and all related notes	Green	Continuous
U-NGAS	Natural gas pipes and all related notes	Cyan	Continuous
U-SSWR	Sanitary sewer pipes and all related notes	Blue	Continuous
U-ELEC	Electricity lines and all related notes	White	Fenceline 2
U-CWTR	Chilled water lines and all related notes		Continuous
U-COMM	Telephone communication lines and all related notes	Blue	Continuous
U-STDR	Storm drain pipes and all related notes	Blue	Continuous
U-IRRG	Irrigation pipes, sprinkler and all related notes	41	Continuous

5.3.34 STRUCTURAL PLAN – S0,SF

Layer	Description	Color	Linetype
S-FNDN-PILE	Piles, drilled piers	Blue	Continuous
S-FNDN-RBAR	Foundation reinforcement	Blue	Continuous
S-SLAB-EDGE	Edge of slab	Blue	Continuous
S-SLAB-RBAR	Slab reinforcement	Green	Continuous
S-SLAB-JOIN	Slab control joints	Red	Continuous
S-ABLT	Anchor bolts	Blue	Continuous
S-COLS	Columns	Green	Continuous
S-WALL	Structural bearing or shear walls	Cyan	Continuous
S-METL	Miscellaneous metal	Green	Continuous
S-BEAM	Beams	Green	Continuous

S-JOIS	Joists	Yellow	Continuous
S-DECK	Structural floor deck	Yellow	Continuous

5.3.35 FURNITURE PLAN – IQ: (Use Architectural floor plan as reference)

Layer	Description	Color	Linetype
I-EQPM-MOVE	Moveable equipment	Blue	Continuous
I-EQPM-IDEN	Equipment identification numbers and notes	Red	Continuous
I-FURN-FREE	Freestanding furniture (desks, credenzas, etc)	Yellow	Continuous
I-FURN-IDEN	Furniture identification numbers and notes	Red	Continuous
I-PART-MOVE	Moveable partitions (Haworth, RJ, etc.)	Green	Continuous
I-PART-IDEN	Partition size symbols	Red	Continuous

5.3.36 AREA Space Allocation Reports(SAR) - RS: (Use Architectural floor plan as reference)

Layer	Description	Color	Linetype
Varies	All layers are assigned by the SAR Application.	Vaires	Varies

5.3.37 EVACUATION PLAN – V0: (Use Architectural floor plan as reference)

Layer	Description	Color	Linetype
V-EVAC-SYMB	Evacuation symbols	Green	Continuous
V-EVAC-PATT	Evacuation patterns	Varies	Continuous
V-EVAC-TEXT	Evacuation associated text	Red	Continuous

END

APPENDIX E
LMSSC CHECKLIST FOR TEST AND INSPECTION
LABORATORY AND JOB SITE

REQUIREMENTS/SPECIFICATIONS
(Fixed Asset or Facility) E/R No.
Quantity/Unit 1 job Nomenclature Page 1 of 1

CONSTRUCTION TESTING AND INSPECTION SERVICES

Provide laboratory tests and professional inspection services to certify materials and monitor workmanship of building construction and site development. Inspection shall be complete and adequate to determine whether finished construction is in compliance with the Uniform Building Code, ICBO, and the LMSSC FES Construction Specifications. Appropriate reports of test results and/or inspection procedures shall be issued promptly to LMSSC (3 copies) and governing city/county agencies as required.

The scope of work shall include those items indicated by the attached checklist and as directed by the LMSSC Construction Engineer.

The nature of this work is such that lump sum prices may give an indication of an optimum testing plan; however, it is recommended that unit costs for the services be the basis of this contract. The services must be provided as requested by the LMSSC Construction Engineer and/or LMSSC Facility Design Engineer.

REQUIRED START DATE (Approximate):

REFERENCE DRAWINGS/DOCUMENT:

Project Engineer
O/45-14, B/041
(408)
Date:

JOB TITLE: _____ E/R:_____

_____ **Concrete**

_____ Design Mix
_____ Certify Materials
_____ Monitor Batching
_____ Slump Tests
_____ Compression Tests
_____ Shrinkage Tests
_____ Inspect Placement
_____ In-Place Hardness Tests
_____ In-Place Coring
_____ Percent of Entrained Air
_____ Concrete Flexural Strength

_____ **Bolts Installed In Concrete**

_____ Certify Materials
_____ Load Tests
_____ Inspect Placement

_____ **Ductile Moment-Resisting Concrete Frame**

_____
_____
_____

_____ **Reinforcing and Pre-Stressing Steel**

_____ Certify Materials
_____ Pull Test
_____ Inspect Placement
_____ Tensile Strength

_____ **Welding**

_____ Welder Certification (AWS)
_____ Shop Fabrication (Trusses) (Columns) (Girders)
_____ Field Welding (Frames) ( )
_____ Sonic ( )
_____ Magnaflux ( )
_____ X-Ray ( )

_____ **High-Strength Bolting**

_____ Certify Materials
_____ Torque Test
_____ Turn of the Nut Test
_____ Load Indicating Washer-Gauge Test

_____ **Structural Masonry**

_____ Certify Masonry Units
_____ Grout Test
_____ Mortar Test
_____ Inspect Placement (Special Inspection per UBC)

_____ **Reinforced Gypsum Concrete**

_____ Mix Design
_____ Certify Materials
_____ Slump Tests
_____ Compression Tests
_____ Inspect Placement
_____ In-Place Coring

_____ **Insulating Concrete Fill**

_____ Mix Design
_____ Certify Materials
_____ Acoustic Test
_____ Inspect Placement
_____ Flame Test

_____ **Spray-Applied Fireproofing**

_____ Certify Materials
_____ Flame Tests
_____ Compression Tests
_____ Inspect Placement

_____ **Piling, Drilled Piers, Caissons**

_____ Certify Equipment
_____ Certify Materials
_____ Location
_____ Pile Driving Criteria (Blow count, penetration, etc.)
_____ Monitor Safety Procedures
_____ Inspect Installation
_____ Indicator Pile Driving Program

_____ **Shotcrete**

_____ Certify Equipment
_____ Certify Materials
_____ Inspect Placement

_____ **Roofing**

_____ Placement Inspection
_____ Unit Weight Tests

_____ **Grading, Excavation, and Filling**

_____ Certify Materials
_____ Elevations
_____ Moisture and Compaction Tests
_____ Inspect Placement
_____ R Value Test
_____ Sand Equivalent Test
_____ Sieve Analysis
_____ Plastic Index
_____ Wash Analysis
_____ Maximum Density Curve - Relative Compaction
_____ Consolidation
_____ Permeability
_____ Shrink-swell
_____ Ground Water Level Measurements
_____ Angle of Internal Friction
_____ Classification of Soils
_____ Plate Breaking Tests
_____ Triaxial Test
_____ Stabilometer Test
_____ Modulus of Subgrade (k)
_____ Direct Shear Testing
_____ Boring up to 70 feet

_____ **Pavement**

_____ Nuclear Density Testing
_____ Determine Rollong Pattern
_____ Oil Extraction
_____ Batch Mix Design
_____ Core - Density Test
_____ Sieve Analysis
_____ Mix Temperatures
_____ Track Coat Mix Analysis
_____ Sampling Mixes
_____ Hubbard Field Stability Test
_____ Marshall Test
_____ Stabilometer Test
_____ Analysis of existing pavements and dynaflect deflection method (familiarization of overlay and deep lift structural design procedures, such as CALTrans procedures, using computer analysis preferable)

_____ **Landscape Tests**

_____ **Site Soil Test**

_____ Chemical analysis for soil fertility and agricultural suitability analysis, nitrate, nitrogen, ammonia nitrogen, phosphorus, potassium, calcium, magnesium, boron, pH, electrical conductivity

_____ Physical analysis for particle size and percentage by weight of organic content

_____ **Import Soil Test**

_____ Chemical analysis for soil fertility and agricultural suitability analysis, nitrate, nitrogen, ammonia nitrogen, phosphorus, potassium, calcium, magnesium, boron, pH, electrical conductivity

_____ Physical analysis for particle size and percentage by weight of organic content

_____ **Test for Ground Bark Soil Amendment Test**

_____ Chemical analysis, pH, electrical conductivity, % nitrogen and iron

_____ Physical analysis, sieve sizes, 3/8”, 1/4”, 4”, 8”, 18”, 35”

_____ Test for water: Agricultural suitability analysis FCR, pH, pHc, electrical conductivity, sodium, calcium, magnesium, potassium, chloride, sulfate, bicarbonate, carbonate, nitrate, boron, sodimsorbtion rating

_____ **Irrigation System Test**

_____ Pressure lines under hydrostatic pressure of 150 psi for 2 hours

_____ Coverage Test

_____ Seed Test: Analysis for % of weed and species of plants

_____ Sod Test: Analysis for % of weed and species of plants

_____ Insect and disease analysis, bacterial diseases, virus diseases, fungus diseases, nematotes

_____ **Mechanical Systems**

_____ **Air Balance: Constant Volume Systems**

_____ Verification of design CFM at all supply air diffusers

A separate form listing each SA and RA diffuser and applicable air handling unit will be provided

_____ Verification of manual air balancing dampers installation at each take-off as indicated on design drawings

_____ Verification of design CFM at each RA grille on ducted systems

_____ Verification of supply fan(s) design

_____ Start Current (Amps)
_____ Running Current (Amps)
_____ Running RPM
_____ Running CFM
_____ Running Velocity (FPM)
_____ Running Static Press
_____ Duct Leakage

_____ Verification of return fan(s) design (if applicable)

_____ Start Current (Amps)
_____ Running Current (Amps)
_____ Running RPM
_____ Running CFM
_____ Running Velocity (FPM)
_____ Running Static Press
_____ Duct Leakage

_____ Verification of Primary Dampers

_____ Manual damper(s) in RA, OSA, and EXH A as designed
_____ Economizer damper(s) in RA, OSA, and EXH A as designed
_____ Minimum OSA damper as designed

_____ Verification of OSA and RA values

_____ Minimum OSA CFM

_____ Minimum OSA velocity

_____ RA CFM

_____ **Air Balance: Variable Volume Systems**

_____ Verification of design CFM at all supply air diffusers and at variable volume terminal device controller

- _____ Maximum CFM setting at VAV box controller
- _____ Minimum CFM setting at VAV box controller
- _____ Design CFM, minimum and maximum at each supply air diffuser
- _____ Maximum velocity setting at VAV controller
- _____ Minimum velocity setting at VAV controller
- _____ Verification of manual balance damper

_____ Verification of design CFM at each RA grille on ducted systems

_____ Verification of supply fan design

- _____ Start current (Amps)
- _____ Running current at static pressure set point [1]
- _____ Running CFM at static pressure set point [1]
- _____ Running RFM at static pressure set point [1]
- _____ Running velocity at static pressure set point [1]
- _____ Duct leakage

_____ Verification of return fan design (if applicable)

- _____ Start current (Amps)
- _____ Running current at static pressure set point [1]
- _____ Running CFM at static pressure set point [1]
- _____ Running RFM at static pressure set point [1]
- _____ Running velocity at static pressure set point [1]
- _____ Duct leakage

[1] At set point, three individual checks shall be performed: a) At maximum CFM (full cooling) demand; b) At nominal minimum CFM (full heating) demand; c) At a stable ambient.

_____ Verification of primary damper

_____ Manual damper(s) in RA, OSA, and EXH A as designed

_____ Economizer damper(s) in RA, OSA, and EXH A as designed

_____ Minimum OSA damper as designed

_____ Verification of OSA and RA values

_____ Minimum OSA CFM

_____ Minimum OSA velocity

_____ RA CFM

_____ **Water Balance: Constant Volume System**

_____ Verification of pump pressure [2]

_____ Verification of pump differential pressure [2]

_____ Verification of pump GPM [2]

_____ Verification of pump head [2]

_____ Verification of start current (Amps) [2]

_____ Verification of run current (Amps) [2]

_____ Verification of all HW coil and CH W coil differential pressure

_____ Verification of all HW and CH W coil GPM

_____ Verification of all HW and CH W coil temperature differential (supply-return)

_____ **Water Balance: Variable Volume System**

_____ Verification of pump pressure [2]

_____ Verification of pump differential pressure [2]

_____ Verification of pump GPM [2]

_____ Verification of pump head [2]

_____ Verification of start current (Amps) [2]

_____ Verification of run current (Amps) [2]

_____ Verification of VFD at minimum design flow

_____ Verification of VFD at maximum design flow

[2] Includes all hot water and chilled water primary and secondary pumps regardless of voltage.

All work under this section of Mechanical Systems will be done by an independent third party, and will only be performed after primary air and water balance is complete.

All information will be to confirm and correlate the final balance report with the design quantities indicated.

The specifications do not necessarily indicate all the tests that may be required. LMSSC will only rely on the Testing Agency to notify the LMSSC Construction Engineer of any additional tests that the Testing Agency may recommend to meet those requirements.

END OF APPENDIX E

APPENDIX F
LOCKHEED MISSILES & SPACE COMPANY, INC.
OPERATIONS SUPPORT DIVISION

FACILITY OPERATIONS

ARCHITECTURAL REVIEW BOARD
POLICIES AND PROCEDURES

DOCUMENT ORIGINATED ON: JULY 1987

(REVISED MAY 1991)

Approval:

J. G. Adams, Manager, O/45-12
Facility Development

O. G. Herrell, Manager, O/45-13
Facility Engineering

F.1 CHARTER STATEMENT

A. Operations Support Division established the Facility Operations, Architectural Review Board (ARB) to ensure that Plants 1, 2 and 5 present a unified and positive visual image to the community, our clients and LMSSC employees.

B. The ARB will assure that facility exterior modifications, the physical "design" of new facilities, and site development take place in accordance with the approved LMSSC Site Master Plan and LMSSC established facility design and construction guidelines.

C. The term "design" shall refer to all physical features of a project including, but not limited to:

1. Maintaining Corporate identity
2. Sense of entry/building approach
3. Scale and proportion
4. Location and interrelationship of structures with regards to site planning
5. Exterior circulation patterns, landscaping, screening and signage
6. Aesthetics

F.2 MEMBERS

A. The ARB is comprised of seven members representing the Architectural, Industrial Engineering, Project Management, Interior Design and Site Planning/Landscaping functions. Members are appointed to the ARB by the functional organization managers within Facility Development and Facility Engineering as follows:

O/45-12	Facility Development	3 members
O/45-13	Facility Engineering	4 members

B. Changes in the organizational representation must be approved by the O/45-12 and O/45-13 Managers. The ARB Chairperson is nominated by the ARB members and recommended to the O/45-12 and O/45-13 Managers for approval. The Chairperson's term shall be limited to one (1) year and commence at the first ARB meeting in January.

C. ARB members must designate and arrange for a substitute in the event of their absence from ARB business meetings and other events.

D. In the event an ARB member is involved with a project being presented to the ARB, then that ARB member shall designate a substitute to sit on the ARB for that particular meeting, and shall not have a vote as it relates to the project associated with the member.

In the event the Chairperson designates a substitute, an existing ARB member shall act as Chairperson.

F.3 MEETING SCHEDULE

The ARB meets on the second and fourth Thursday of each month at 2:00 PM. Additional meetings, when required, will be scheduled by the ARB Chairperson.

F.4 APPLICABLE CODES AND GUIDELINES

In an effort to streamline the ARB review and approval process, the current adopted edition of following codes and guidelines are considered by the ARB as the governing references relative to building and site projects on LMSSC Plants 1, 2 and 5:

International Conference of Building Officials (ICBO) Publications
National Fire Protection Association (NFPA) Standards
Applicable State and Local Codes
CALTRANS Sign Standards
LMSSC Color Standards
LMSSC Sign Standards
LMSSC Facility Engineering Standard Construction Specifications, Volumes I through IV
LMSSC Facility Engineering Design Standards
LMSSC Site Master Plan

F.5 SCHEDULING SUBMITTAL

All projects requiring ARB review shall submit the required submittals, as described in Paragraph F.6 to the ARB Chairperson no less than five (5) working days prior to the desired ARB meeting date. This lead time is necessary to allow the board members to become familiar with the project scope and site impact (if any), schedule site visits as necessary, and to make the ARB meeting more productive and efficient.

F.6 SUBMITTAL REQUIREMENTS

F.6.1 GENERAL

A. All projects which have an exterior visual or physical impact on Plants 1, 2, and 5 sites are required to be presented to the ARB before submitting to LMSSC Senior Management and all applicable outside agencies.

B. For new construction projects, interface with the ARB shall be accomplished in most cases through the Project Engineer. Other than new construction, the Architect reviewing all Facility Operations Evaluation Board (FOEB) job Expenditure Requests (Form LMSSC 997-9) shall determine whether ARB review and approval is required.

C. If the designated Architect from O/45-13, reviewing jobs at the FOEB, determines that a project needs ARB review, he/she will place a stamp on the Form LMSSC 997-9, denoting “ARB APPROVAL REQUIRED”. A copy of this Form LMSSC 997-9 with an attached ARB “Submittal Request Form” (refer to the attached sample forms) will then be forwarded to the Expenditure Request initiator, the Industrial Engineer, the Project Manager and the Project Engineer (when applicable) to notify them of the ARB’s determination.

D. The responsibility of contacting the ARB Chairperson to schedule a review meeting lies with either the Project Manager or the Project Engineer.

E. The ARB Chairperson shall keep a log of all “Submittal Request Forms” denoting active projects requiring ARB review.

F.6.2 DOCUMENTATION

A. NEW CONSTRUCTION PROJECTS**:**

1. At the project identification/validation (during the Industrial Engineer’s programming phase), the Project Engineer or Industrial Engineer, shall advise the ARB Chairperson regarding the project. The ARB shall provide guidelines to be included into the Project Requirements.

   The project shall include in its schedule all major milestones for ARB review.

2. During the Schematic Design phase of the project (30% into the design), the Project Engineer shall submit the following to the ARB:

   a. Conceptual exterior elevations
   b. Conceptual site plan
   c. Conceptual colors and material selection
   d. Conceptual landscaping & fencing plan (if applicable)
   e. Preliminary renderings and models (if available)
   f. Floor plans showing access and exterior adjacency
   g. Emergency/security/fire access plans (if available)

3. During the Design Development phase of the project, the Project Engineer shall submit the following to the ARB:

   a. Final elevations and site plans
   b. Landscaping and fencing plans
   c. Revisions to the previously approved ARB conceptual phase submittal (highlighted)

B. PROJECTS WHICH ENTAIL BUILDING EXTERIOR MODIFICATIONS, ADDITIONS, OR SMALL SITE PROJECTS:

1. The Project Architect/Engineer or presenter, shall submit the following during the conceptual phase of the project, as applicable:

   a. Exterior elevations
   b. Site plan, showing relationship to buildings and site features
   c. Exterior colors and material selections
   d. Landscaping and fencing plan
   e. Floor plans
   f. Renderings/photographs (when applicable)

F.7 APPROVAL PROCESS

A. The Project Architect/Engineer or presenter shall present the proposed project to the ARB. The ARB then evaluates the project and votes for 100% approval or approved with conditions. The minutes of the ARB meeting shall state the approval or conditions of approval.

B. These minutes shall be kept in the project record files and in the ARB files. No project requiring ARB approval can be processed for construction bidding without the ARB approval statement.

C. If approved with conditions, the ARB will state comments and recommendations defining the revisions/modifications required. The Project Architect/Engineer or presenter shall make the necessary revisions/ modifications and resubmit to the ARB.

D. For new construction projects, a representative from the ARB shall be invited by the Project Manager or the Project Engineer to senior management reviews.

E. ARB approvals are generally valid for a period of one year from the date of approval.

In the event that a project is put on hold during or prior to the completion of the design development phase, the project is then required to be reviewed again by the ARB, to ensure its conformance with the site, or any other changes which might have occurred since the initial approval.

F.8 APPEAL PROCESS

ARB disapprovals or approvals with conditions may be appealed to the O/45-12 and O/45-13 Managers. All decisions resulting from such an appeal, shall be duly noted in the minutes of the following ARB meeting.

END OF APPENDIX F

ARCHITECTURAL REVIEW BOARD

SUBMITTAL REQUEST FORM

ER # _____
BUILDING/SITE LOCATION _____
JOB DESCRIPTION _____
TO:
INDUSTRIAL ENGINEER: _____ ORGN. _____ BLDG. ____
PROJECT ENGINEER: _____ ORGN. _____ BLDG. ____
PROJECT MANAGER: _____ ORGN. _____ BLDG. ____

The above project requires submittal and review by the LMSSC Architectural Review Board. The items marked below need to be submitted for review on or before _____

NEW CONSTRUCTION PROJECTS

Schematic Design Phase:
__ Conceptual exterior elevations (in color)
__ Conceptual site plan
__ Conceptual colors and material samples
__ Conceptual landscaping plan
__ Preliminary renderings and models
__ Floor plans showing access and exterior adjacency
__ Emergency/security/fire access plans (if available)

Final Design Phase:
__ Final elevations
__ Final site plans
__ Final landscaping and fencing plans
__ Revisions/modifications to previously approved ARB Conceptual phase submittal (highlighted)

PROJECTS WHICH ENTAIL BUILDING EXTERIOR MODIFICATIONS, ADDITIONS, OR SMALL SITE PROJECTS:

__ Exterior elevations (in color)
__ Site plan
__ Exterior color board and/or description of proposed materials.
__ Landscape plan
__ Floor plans
__ Existing photographs

Should you have any questions or concerns, please contact the LMSSC ARB Chairperson:
_____, Orgn. _____, Bldg. 041, _____.

Requested by: _____ Date: _____

Revised 8/91

EXPENDITURE REQUEST FORM

Expenditure Request

Year | Budget Office Code | Budget Code | Division | Department | Preparer Using Orgn. Name, Orgn. No., and Using Location

CODE 11
AMOUNT $

Date Prepared | Reference No. C 79126 | Date Registered | Register No.

Contract, Project or Normal | Qty. | Title of Requested Item or Service | Budget Transfer Number | Required Date | Originator's Cost Est. $

DESCRIPTION

Specifications

Instrumentation and Measurement Displays to Indicate in: ☐ Metric ☐ Dual ☐ Customary Units

JUSTIFICATION DETAIL (These questions must be answered)
1. What generated this requirement?
2. Economic and/or technical advantage to LMSC?

Dock | Bldg. | Floor | DELIVER TO Orgn. | Col. | Init. | Extension

Fac. Contr. No. Fixed Asset Exp. | CL | W.O. | W.A.

Preferred Manufacturer

Equivalent Manufacturer

Tag No. of Equipment To Be Replaced, Modernized, Repaired | Orgn. | Annual Maintenance Cost $

• FIXED ASSETS/FACILITIES Cost Estimate | Revised Estimate

Capital Item	Date	Capital Item	Date
Taxes		Taxes	
Transportation		Transportation	
Installation		Installation	
Total Capital Budget		Total Capital Budget	

• OVERHEAD EXPENSE Cost Estimate | Revised Estimate

Expense Equipment	Expense Equipment
Plant Rearrangement	Plant Rearrangement
Other	Other
Total Overhead Expense	Total Overhead Expense

• TOTAL COST | • TOTAL REVISED COST

BUDGET TRANSFER DATA

From Item No.	Description	Amount	To Item No.	Description	Amount

BUDGET TRANSFER ENDORSEMENTS
Requesting Budget Office

Releasing Budget Office

EXPENDITURE/BUDGET APPROVAL (Required level of approval, 64321)

Executive Vice President's (or A.C.O.) Approval

EXPENDITURE BUDGET REQUEST

Originator / Area Engineer Name (Typed), Orgn, Ext. | Requesting Orgn Mgr, Name (Typed), Signature, Orgn

Area Engineering Manager Signature, Orgn | Requesting Budget Office Signature, Orgn, Date

REQUEST / APPROVAL

FORM LMSC 897-6

LOCKHEED MISSILES & SPACE COMPANY, INC.

APPENDIX G
INFORMATION SERVICES
SUPPORTED SERVICES CHECKLIST

Information Services

SUPPORTED SERVICES CHECKLIST

Voice (Telephones)

What is your anticipated move date?	_____	
Approximately how many people will be moving?	_____	
Do supervisors, managers, and/or secretaries require multi-button telephone sets to share lines and screen calls?	❑ Yes	❑ No
Do you require multibutton sets for security reasons?	❑ Yes	❑ No
Do you have groups of people who need to pick up each other's calls or have calls forwarded to another line (call forward, call pick-up, roll-over)?	❑ Yes	❑ No
Do you require Voice Mail service?	❑ Yes	❑ No
Do you have dial-up (connected to a modem) computer terminals?	❑ Yes	❑ No
Will you need Secure Telephone Unit (STU III) phones?	❑ Yes	❑ No
Will you require pay phones and/or lobby phones?	❑ Yes	❑ No
Will you require facsimile (FAX) service?	❑ Yes	❑ No
• Encrypted FAX service?	❑ Yes	❑ No
Do you require non-emergency area paging, e.g., loudspeaker announcements in a lab, factory, or high-bay area?	❑ Yes	❑ No

SUPPORTED SERVICES CHECKLIST (continued)

Information Services

Data

What types and quantities of data equipment will be moving? (For example: 25 terminals, 10 PCs, etc.)

_____

_____

_____

Do you require high-speed communications to another LMSC building, e.g. for CADAM or mainframe computer access?

❑ Yes ❑ No

Which IS-supported computing services are you now using?

- ❑ Business Computing
- ❑ Scientific
- ❑ Engineering
- ❑ CADAM
- ❑ Factory Data Collection
- ❑ Other:_____

Which IS-supported computing services will you need at your new location?

- ❑ Business Computing
- ❑ Scientific
- ❑ Engineering
- ❑ CADAM
- ❑ Factory Data Collection
- ❑ Other:_____

Which makes and models of personal computers do you use?

- ❑ IBM PC, PC/XT
- ❑ IBM PC/AT
- ❑ IBM PS/2
- ❑ PC/XT Clone
- ❑ PC/AT Clone
- ❑ Apple Macintosh
- ❑ Other:_____

Supported Services Checklist *Page 2*

SUPPORTED SERVICES CHECKLIST (continued)

Information Services

Data (cont.)

Do these PCs now connect to each other to share files, a printer, or applications?	❑ Yes	❑ No
Do these PCs communicate with a larger computer in your building, such as a VAX?	❑ Yes	❑ No
Do these PCs have any special wiring, special attachments, or add-on circuit boards (such as network cards)?	❑ Yes	❑ No
Will you require fiber optic or coaxial cable for any of your computing devices?	❑ Yes	❑ No
Do you have any workstations, such as SUN, VAXstation, Silicon Graphics, Apollo, or Mentor Graphics?	❑ Yes	❑ No
Do you require any of these data networks?	❑ AppleTalk ❑ DECnet ❑ Ethernet ❑ Token Ring ❑ WangNet ❑ SNA ❑ Other:_____	
Do you currently have or are you purchasing the necessary "active components" (terminal servers, controllers) to operate your desired network? *(Note: Facilities Operations will provide only passive networking components, such as wire/cabling, connectors, and receptacles that conform to the LMSC Facility Design Engineering Standards for telecommunications.)*	❑ Yes	❑ No
Will you require freespace communication (e.g., microwave radio or infrared communication links)?	❑ Yes	❑ No

SUPPORTED SERVICES CHECKLIST (continued)

Information Services

Data (cont.)

Will you require radio-operating cranes? *(Note: Licensing is required.)*	❑ Yes	❑ No
Do you share equipment (e.g., controllers, terminal servers, printers, CADAM scopes) with another organization that is not relocating with you?	❑ Yes	❑ No
Do you plan to receive video from other buildings via the CNU, e.g., for teletraining?	❑ Yes	❑ No
Do you require secure/classified networking?	❑ Yes	❑ No

Supported Services Checklist *Page 4*

SUPPORTED SERVICES CHECKLIST (continued)

Information Services

etc... Other IS Requirements

Reprographics

- Do you require classified reprographics? ❑ Yes ❑ No
- Do you currently have access to an operator-served reprographics unit? ❑ Yes ❑ No
- Do you have/need convenience copiers? ❑ Yes ❑ No

Photographic

- Do you require darkroom facilities? ❑ Yes ❑ No

Audio-Visual

- Do you require any of these items for conference rooms?
  - ❑ Copy boards
  - ❑ Overhead projectors
  - ❑ Screens
  - ❑ Movie projectors
  - ❑ VCR:
    - ❑ VHS ❑ Beta ❑ 3/4"
  - ❑ TV Monitor
  - ❑ PA system (lectern/microphone and speakers)

APPENDIX H
PROJECT ESTIMATING PROCEDURES

H.1 GENERAL

Project requirements for construction estimating services will be stated in the Project Requirements Document. When required, construction estimating services shall conform to the following guidelines:

A. All construction cost estimates shall be detailed in the current Construction Specifications Institute (CSI) format and prepared on standard LMSSC forms organized in the following order:

1. Cost Estimate Summary, Figure H.1.1
2. Cost Estimate Sub Summary, Figure H.1.2
3. Cost Estimate, Figure H.1.3
4. Estimate Qualifications , Figure H.1.4 (a list of drawings, design assumptions, known field conditions, included and excluded work, etc., upon which the estimate is based).

All estimates shall include all four forms. Full size copies of these forms are available from the Project Engineer. If estimates are done manually, all entries are to be made in pencil and the pencil copy of the estimate should accompany each submittal to LMSSC. Computer generated estimates are acceptable, but must conform to the formats in Figures H.1.1 through H.1.4. Copies of computer generated forms are available upon request from LMSSC.

B. Provide one floppy disk copy and minimum of one hard copy of the estimate to LMSSC at each submittal. Estimating data from R.S. Means standards or equal is acceptable for all estimates. Labor rates used must be current for the appropriate county and must include all applicable fringe benefits. These rates are available from the Construction Industry Council of California in Oakland. The estimate should be properly escalated to account for the actual construction schedule.

C. The estimate shall list all items that will contribute to the total cost of the project. Costs should be included for all items of work required for the job but not shown on the drawings (i.e., testing, general conditions, dust protection, etc.). Costs for all special conditions such as high security and project phasing should be included. Costs of long lead items, special equipment, security related items, and items furnished by LMSSC should all be shown separately.

D. Each estimate submitted shall include capital and expense breakdowns for every item of work. Refer to Section H.4 for definitions and examples for capital and expense distribution. Every line item of work shall list quantities and unit costs and identify each as a capital or expense cost.

E. All estimates shall be complete and detailed. General square foot costs for major systems are not allowed. Every estimate shall be based upon current drawings as well as future designs and details to determine the project's final cost. Estimates shall consist of unit prices for actual quantities of material and labor from a complete and accurate take-off. Copies of legible and understandable take-off sheets shall be furnished upon request.

F. Contingencies shall not be added to each line item of the estimate. When required, it shall be added as a separate item at the end of the estimate.

H.2 REQUIREMENTS PER TYPE OF ESTIMATE

Refer to the Project Requirements Document for what types of cost estimates are required for the project. All estimates shall be in full accordance with Paragraphs H.1.A through H.1.F above, and as follows:

A. PRELIMINARY ESTIMATE

Normally submitted with and based upon the 30% design completion package. Generate quantities from available documents. The accuracy of this estimate is expected to be within minus ten percent to plus thirty percent (-10% to +30%) of the anticipated total construction cost for the project. Include contingency costs of 15%, or as required by the Project Manager. List all design assumptions on the appropriate form.

B. DESIGN DEVELOPMENT ESTIMATE

Normally submitted with and based upon the 60% design completion package. The accuracy of this estimate is expected to be within minus 10% to plus 20% of the anticipated final cost for the project. Include contingency costs of 15%, or as required by the Project Manager.

C. PRE-FINAL ESTIMATE

Normally submitted with and based upon the 90% design completion package. The accuracy of this estimate is expected to be within minus 5% to plus 15%. Contingency costs of 10% shall be included as a separate item.

D. FINAL ESTIMATE

Normally submitted with and based upon the 100% Design/Construction Documents package. The accuracy of this estimate is expected to be within minus 5% to plus 10% of the total construction cost of the project. The final estimate shall contain no contingency costs. Copies of legible and understandable take-off sheets shall be attached to the final estimate.

E. CHANGE ORDER ESTIMATES

1. For construction changes less than or equal to $20,000, the Designer will prepare a simplified one line cost which should show lump sum material/labor breakdown, plus a 20% Overhead and Profit. Capital/Expense distribution will be based on the best judgment of the Designer.

2. The Designer will prepare a detailed estimate for the changes when the total expected cost will be more than $20,000. This estimate will be submitted to the Cost Engineering Group for certification and concurrence. Refer to item H.2.D for details.

H.3 ACCURACY OF ESTIMATES

A. All construction cost estimates developed by Designers will be validated by the LMSSC Cost Engineering Group. However, the Designer will be held solely responsible for the accuracy of all estimates (including itemizations, quantities, labor and material costs, mathematics, and all other aspects of the estimate), whether or not LMSSC chooses to comment on the estimate. Any estimate found not to conform to these standards will be returned to the Designer for immediate revision and re-submittal.

B. At the Project Manager's direction, submit a cost variance analysis when the lowest construction bid price exceeds the Designer's final construction cost estimate by 10%. Identify major discrepancies, changes, omissions, etc., which could account for the difference. The Designer may be requested to attend a meeting to clarify the data and validate the bid.

H.4 DETERMINATION OF CAPITAL VS. EXPENSE

Capital/Expense determination is based on current rules for fixed asset depreciation as published by the Internal Revenue Service (IRS). See Figures H.4.1 through H.4.6.

H.5 INSTRUCTIONS ON COMPLETING COST ESTIMATING FORMS

A. All items taken off from the drawings should be listed on the Cost Estimate Form, Figure H.1.3, according to the various disciplines. For example: Architectural, Civil, Mechanical, Electrical, etc., should be listed on separate sheets. Materials should be properly marked up for subcontractors handling and sales tax added on each page. For larger projects, more than one sheet may be required for a particular discipline.

B. The subtotals are then carried over to the Cost Estimate Sub-Summary, Figure H.1.2. Each Subsummary should have only one discipline listed and totaled.

C. Subtotals from the Sub-Summary are then carried over to the Cost Estimate Summary, Figure H.1.1, and all figures are then totaled to Engineering Category Totals.

D. General Contractor's overhead and profit and proper contingency should then be added as a percentage. (Operations of Paragraphs H.5.B, H.5.C and H.5.D will be done automatically if LMSSC computer software is used.)

E. Any other costs deemed necessary should be added manually at the end to generate the total job cost.

F. Designer's information should then be filled on the Cost Estimate Summary.

END OF APPENDIX H

FIGURE H.1.1

COST ESTIMATE SUMMARY FORM

PAGE 1 OF

COST ESTIMATE SUMMARY

BLDG JOB TITLE
ER#

		CAPITAL	EXPENSE	TOTAL
DEMOLITION				
SITE WORK				
ARCH/STRUCTURAL				
EQUIPMENT				
FIRE PROTECTION				
PLUMBING				
MECHANICAL				
ELECTRICAL		$		$
ACAS				
EMERGENCY NOTIFICATION				
SECURITY				
ENVIRONMENTAL				
OTHER				
ENGINEERING CATEGORY TOTALS		$		$
% G.C. OVERHEAD & PROFIT				
% CONTINGENCY				
CONSTRUCTION TOTAL		$		$
ADA COSTS				
ENGINEERING COSTS				
OUT-SOURCE TOTALS		$		$
IN-SOURCE TOTALS		$	$	$

Remarks

ADA ADDED TO PROJECT
P.O.T. INCL. WITH PROJECT

PREPARED BY:	ORGN.:	EXT.:	DATE:
CHECKED BY:			DATE:
APPROVED BY:			DATE:

FIGURE H.1.2

COST ESTIMATE SUB SUMMARY FORM

COST ESTIMATE SUB-SUMMARY

BLDG
ER#

JOB TITLE

	CAPITAL	EXPENSE	TOTAL
SUB-TOTALS			

FIGURE H.1.3

COST ESTIMATE FORM

COST ESTIMATE - CONSTRUCTION / REARRANGEMENT / INSTALLATION

1 SHEET ___ OF ___

BLDG | JOB TITLE | ER/RN NO.

ENGINEERING CATEGORY: ☐ ARCH / STRUCT ☐ ELECT. ☐ MECH. ☐ PLUMB. ☐ EQUIP. ☐ OTHER

TYPE: ☐ R.O.M. ☐ REVISION ☐ DETAILED ☐ SUPPLEMENT

ITEM NO.	DRAWING NUMBER / WORK DESCRIPTION	QUANTITY CAP	QUANTITY EXP	UOM	MATERIAL COSTS RATE	MATERIAL COSTS CAPITAL	MATERIAL COSTS EXPENSE	LABOR COSTS MAN HRS	LABOR COSTS RATE	LABOR COSTS CAPITAL	LABOR COSTS EXPENSE

REMARKS

MATERIAL TOTAL	
% MARKUP	
SUBTOTAL	
% SALES TAX	
LABOR COSTS	
SUBTOTAL	
% OH & PROFIT	
% OTHER COSTS	
TOTAL THIS PAGE	

PREPARED BY / REVISED BY | EXT. | ORGN. | DATE

CHECKED BY | DATE | APPROVED BY | DATE

FIGURE H.1.4

ESTIMATE QUALIFICATIONS FORM

COST ESTIMATE - CONSTRUCTION / REARRANGEMENT / INSTALLATION		SHEET OF
BLDG JOB_TITLE	ER/RN NO.	
ENGINEERING CATEGORY		TYPE
DESIGN ASSUMPTIONS & KNOWN FIELD CONDITIONS		
PROJECT EXCLUSIONS		
DRAWINGS USED FOR TAKE-OFF	PREPARED BY	EXT. ORGN. DATE
	CHECKED BY	DATE APPROVED BY DATE

FIGURE H.4.1

CAPITAL DEFINITION

CAPITAL

DEFINITION : A unit of tangible Lockheed property that meets the following criteria:

- Acquisition costs of $1,000 or more
- Useful life of 2 years or more
- Economically controllable as an entity

EXAMPLES : CAPITAL EXPENDITURES

CONSTRUCTION

- New construction
- Portion of replacement that reflects increased quality and / or quantity

LEASED BUILDINGS

- Interior development of new long term lease buildings

EQUIPMENT

- New Purchase , first time installation
- Vendor acceptance testing
- Major rehabilitation or rebuild

O/45-11

FIGURE H.4.2

EXPENSE DEFINITION

EXPENSE

DEFINITION : Indirect costs, other than capital expenditures that meet the following criteria :

- Does not directly contribute to the accomplishment of project requirements
- Does not add to the net value of Lockheed owned property

EXPENSE EXPENDITURES

EXAMPLES :

CONSTRUCTION

- Demolition, removal, and rearrangements
- Replacement that reflects original quality and / or quantity

LEASED BUILDINGS

- Interior development of short term leased buildings (2 years or less)

EQUIPMENT

- Normal Maintenance
- Minor Modifications
- Relocations or removals
- In-House Acceptance Testing

O/45-11

FIGURE H.4.3

TYPES OF EXPENSE

TYPES OF EXPENSE

- **PLANT REARRANGEMENT (PR):** Expense costs associated with rearrangements, remodels, rework, etc. where relocations, space and or personnel changes occur. Includes building move costs.

- **REPAIR & MAINTENANCE (R & M):** Expense costs associated with the repair & maintenance of LMSC facilities & equipment. Examples include repainting, roof patching , and rework to facility infrastructure (road & parking lot repairs and resurfacing). This account also includes routine equipment maintenance.

- **PROFESSIONAL & OTHER OUTSIDE SERVICES (POS):** Expense costs associated with outside design services. Examples include design costs for plant rearrangement or repair & maintenance construction elements, or redesign. Temporary indirect personnel & outside studies are also included in this account.

- **PERISHABLE EQUIPMENT:** Expense costs associated with the acquisition of equipment with a cost under $1,000 or a useful life of less than two years. Examples include cabinets, racks, etc. Funding is provided by the user's overhead budget.

O/45-11

FIGURE H.4.4

CAPITAL/EXPENSE DIFFERENCES

HOW CAPITAL & EXPENSE $ DIFFER

CAPITAL: CAN BE APPROPRIATED IN ONE YEAR, SPENT IN THAT YEAR OR IN SUBSEQUENT YEARS

- FINITE AMOUNT OF BUDGET EACH YEAR
- PROPOSAL SUBJECT TO CORPORATE REVIEW AND APPROVAL
- COMES OUT OF COMPANY PROFITS
- COSTS WRITTEN OFF/ DEPRECIATED OVER THE USEFUL LIFE

EXPENSE: CANNOT BE CARRIED OVER INTO SUBSEQUENT YEARS

- BECOMES AN ACTUAL WHEN PAID OUT OR LIABILITY IS ACCRUED
- PROPOSAL SUBJECT TO LMSC REVIEW AND APPROVAL
- YEAR-END PROJECTIONS CONTINUALLY ANALYZED & UPDATED
- COSTS WRITTEN OFF IN THE YEAR INCURRED

O/45-11

FIGURE H.4.5

CAPITAL/EXPENSE DETERMINATION

CAPITAL/ EXPENSE DETERMINATION

EXAMPLES:	CAPITAL	EXPENSE
SAME QUANTITY/SAME QUALITY		
• REMOVE (1) 120V OUTLET, INSTALL (1) 120V OUTLET		TOTAL COST
SAME QUALITY/ INCREASED QUANTITY		
• REMOVE 10 FT OF 8 FT HIGH DRYWALL INSTALL 12 FT OF 8 FT HIGH DRYWALL	INCREASED QUANTITY (2 FT)	REMOVAL ORIGINAL QUANTITY (10 FT)
BETTER QUALITY/ SAME QUANTITY		
• REMOVE (1) 2-PLUG 120V OUTLET, INSTALL (1) 4-PLUG 120V OUTLET	VALUE ABOVE COST OF 2-PLUG OUTLET	REMOVAL COST OF 2-PLUG OUTLET
BETTER QUALITY/ INCREASED QUANTITY		
• REMOVE 100 FT OF 2 INCH PIPE INSTALL 250 FT OF 6 INCH PIPE	VALUE ABOVE COST OF 100 FT OF 2 INCH AND 150 FT OF 6 INCH PIPE	REMOVAL COST OF 100 FT OF 2 INCH PIPE
REPLACEMENT OF A DIFFERENT KIND		
• REMOVE PAPSCO PARTITION, INSTALL DRYWALL	TOTAL COST OF DRYWALL	REMOVAL OF PAPSCO
NEW INSTALLATION WITHOUT REMOVAL	TOTAL COST	

0145-1

FIGURE H.4.6

EXCEPTIONS

EXCEPTIONS

- **LONG TERM LEASED BUILDINGS (NEW LEASE, MORE THAN 2 YEARS)**

  Initial Interior Development: All elements are Capitalized (including demolition)

- **SHORT TERM LEASED BUILDINGS (NEW LEASE, 2 YEARS OR LESS) :**

  Constuction costs are all expense except tagged equipment Items (A/C units, Haworth), which can be removed and used in other buildings.

- **ORIGINAL COMPLEMENT:**

  Newly acquired perishable equipment, perishable tools and expendable furniture and fixtures, each less than $1,000 , but amounting in total to more than $250,000 , required in the initial outfitting of a new owned or LT leased building. LMSC financial policy requires these items be Capitalized.

- **SPECIFIC EXCEPTIONS:**

  ACORN FENCING- Always expense (plant rearrangement)

  LYONS RACKS- Always expense User's perishable equipment)

  REPLACEMENT OF CARPET/ DRAPES- (Over 7 years)- capital

O/45-11

APPENDIX I

COLOR STANDARD

APPENDIX I IS UNDER REVISION. CONSULT MIKE DOOLEY AND JOAN FERRIN-PANN FOR MORE INFORMATION.

APPENDIX K
DESIGN AND CONSTRUCTION ADMINISTRATION SERVICES

1. INTRODUCTION

A. This standard describes the services to be provided by Architectural and Engineering (A/E) firms for the design, permitting and construction of facilities described in the Statement of Work (SOW).

B. Refer to General Design Standards and individual discipline Design Standards for specific design procedures and deliverables at each phase of the project.

C. In addition to pre-design and design services, the fee for design shall include permitting and bidding phases of the project, unless excluded in the SOW. Construction administration services will commence after the award of the construction contract.

D. All design and construction for LMS owned facilities shall comply with the following Standards

1. Facility Engineering Standards (FES), Design Standards and Construction Specifications Volumes I through IV. FES are on line at http://www.lockheedmartin.com/us/ssc/edc.html
2. Environment, Safety and Health Requirements

2. COMMUNICATIONS AND MEETINGS

A. The A/E shall designate a Project Manager who is responsible for the daily management of all aspects of Design and Construction. The Project Manager shall not be reassigned during the course of the project without prior approval from LMS.

B. Communication between the A/E Project Manager and LMS shall be directed to the LMS Project Manager (PM), and LMS Procurement Representative (CA), as applicable, and as otherwise directed by the PM.

C. Project meetings will be held on a weekly basis, and as deemed necessary by either LMS or the A/E, unless otherwise noted in the SOW. The A/E shall record meeting minutes and publish within two working days of occurrence.

3. DESIGN SERVICES

A. Design services shall be as described in the General Design Standard and in the Design Standard for each discipline. Design services include

1. Pre-design, including validating and further developing the project requirements in consultation with LMS users, subject matter experts and other stakeholders, and submission of a Basis of Design (BOD) document.

2. Verification of existing conditions. As approved by LMS, retain contractor services to assess the condition of utilities and equipment serving the area, and recommend modifications and repairs. Perform underground utility survey for any project requiring excavation. Submit drawings indicating as-built utility conditions. Retain underground locator services as required to perform surveys. Third party contractor and locator services will be a reimbursable expense.
3. Schematic Design (30% complete)
4. Design Development (60% complete)
5. Construction Documents

4. DESIGN SERVICES PROVIDED BY OWNER

A. The A/E design shall develop cubicle and partition layouts, as part of their design. If layouts are provided by LMS, the A/E shall validate the layout and propose modifications as required. LMS will engage the services of the partition vendor to develop final detailed layouts. Collaborate with the partition vendor to coordinate the layout of furniture and partitions with the other work of the project, including power and data pole locations in relation to the other ceiling elements such as lights and grilles.

5. DESIGNATED DESIGN VENDORS

A. The A/E shall retain the services of one of the LMS designated design consultants for the following work:

1. Access control systems, security alarms, sound masking and other security systems
2. Fire detection and alarm systems
3. Public address systems

B. Acceptable consultants

1. RFI Security & Communication Services, Inc.
2. Stanley Security Solutions

6. GOVERNMENT AGENCY CONSULTING, REVIEW AND APPROVAL

A. Determine applicable Federal, State and Municipal requirements. Verify code interpretations with enforcement agencies and document agreements. Prior to meetings with the enforcement agency, inform the LMS Architect, who may elect to attend the meeting. Provide Meeting minutes and forward to the enforcement agency, LMS Architect, and LMS PM.

B. Additional design services required due to enforcement agency code interpretations that differ from the A/E interpretation will be at the A/E firm's expense.

Exception: Cases in which the enforcement agency contradicts prior agreements.

C. Appear at local jurisdiction meetings and reviews to obtain all permits, including building permits, use permits and variances applicable to this project.

D. Prepare all documentation for permit and variance applications.

7. PROJECT COORDINATION AND QUALITY CONTROL

A. Coordinate between all Design Disciplines and their work. Final Construction Plans shall be submitted as one package, fully coordinated among all design disciplines, and with coordinated sheet numbers.

B. Provide effective quality control measures to minimize errors and omissions in the design and assure constructability. Quality control shall be maintained throughout the course of the project, from the pre-design through post construction services.

C. In the technical proposal identify the key personnel and describe the specific procedures to be employed in the project to achieve quality control. These procedures shall be described as to what they are, how they will be implemented, when they will occur and which documents or services will be affected. Proposals not identifying specific and verifiable quality control procedures may be disqualified.

8. DESIGN REVIEW

A. Review all drawings and documentation to assure proper coordination of all design disciplines and their consultants before submitting to LMS.

NOTE: LMS assumes no responsibility for the design's technical correctness or code compliance. Review and signoff does not relieve the A/E from responsibility for detailed conformance to design and construction standards, applicable codes and project requirements.

B. Conduct regular informal "over the shoulder" design reviews. Record LMS comments at each informal design review and forward these comments and pertinent meeting minutes to the CA and project team within 2 working days.

C. Conduct formal design reviews at 30%, 60% 90% and 100% complete. Refer to Facility Engineering Design Standards for a detailed description of the required contents of each review submittal. Submit the review drawings prior to the meeting, with sufficient time for a thorough review prior to the meeting. All formal reviews will be held at LMS.

1. At the 60% design review, conduct a job walk with all stakeholders to review all existing site and field conditions.
2. At the 100% complete design review, submit a stakeholder sign-off sheet for sign-off at meeting.

D. Incorporation of LMS Design Review Comments

1. LMS comments will be forwarded 5 working days after each formal design submission. The comments will identify deviations from stated project requirements and standards of the submitted design and documentation.
2. Incorporate all LMS design comments, or provide a written rationale refuting the comment, within five working days. Refutations shall be supported by appropriate code references, cost analyses or other specific justification. Submit copies of LMS comments with responses and indicating what action has been taken.
3. The detailed project requirements are subject to change through the 60 percent design review, after which the requirements will be frozen. During this time changes to the design and documentation required by LMS review comments shall be made at no additional cost as long as they are within the original scope of the project.
4. Any comments or directions that, in the opinion of the A/E, are outside the scope of services shall be immediately brought to the attention of the CA, in writing, for resolution. No work considered to be outside the scope of services shall begin without the express approval of the CA.

9. HAZARDOUS MATERIAL REMEDIATION

A. Prior to demolition and by 30% design, LMS will provide sampling for Asbestos Containing Materials, Asbestos-Containing Construction Materials, and cadmium/lead containing paints.

B. Incorporate sampling results and abatement work into the design to allow for bidding out the work.

10. CONSTRUCTION SPECIFICATIONS

A. During the Design Development Phase of the project:

1. Research and identify potential building materials, systems and equipment and develop a written analysis comparing the costs and features of alternate selections.
2. Develop a list of all potential long lead items, identifying time spans, manufacturers, estimated costs, modes of delivery, etc.
3. Prepare final specifications for any long lead items to be pre-purchased by LMS to expedite delivery. The specifications for the construction project shall indicate that the contract for the pre-purchased equipment will be assigned to the construction contractor, including receipt, acceptance, and installation and testing, and shall be covered under the construction contractor's warranty.

B. During the Construction Documentation Phase of Design develop complete specifications as required for the construction of the project.

1. Where practical, only Supplemental Specifications will be required. Supplemental Specifications are additions and modifications to the LMS Construction Specifications required to tailor them to the project.
2. Supplemental specifications shall follow the CSI and Facility Engineering standard format.
3. The supplemental specification package table of contents shall list new and modified sections and shall include all the other LMS Construction Specification sections that apply to the project.
4. Supplemental Specifications shall be provided only as WHOLE SECTIONS. No "addendum type" sections will be allowed.
5. The materials and methods of construction specified in any new or modified section shall meet or exceed the standards of quality established by the LMS FES Construction Specifications.
6. Include a list of submittals and samples required from the subcontractors required during construction compiled in consultation with and provided to the LMS PM.

C. Submit information for bidders, for the use of Procurement, in a Word document format. Information should include

1. Short summary of work
2. Special conditions, developed in consultation with the project team, to include
   a. Operational constraints, use of building during construction
   b. Coordination with other work
   c. Special services such as equipment relocation
   d. Special procedures such as dust control
3. Security procedures
4. Full list of drawings

11. RECORD DOCUMENTATION

A. Submit record construction documents per Facility Engineering Design Standards at the time that the Building Permit is obtained. Drawings shall incorporate all design changes and include addenda and City review comments. Include all studies and calculations prepared for the project.

B. At the end of the project produce as-built record drawings per the requirements of Record Drawing and As-Builting Services later in this document.

12. PROJECT ESTIMATING SERVICES

A. Provide a preliminary construction cost estimate at 30% design. Accuracy shall be within +/- 25% and shall be based upon area, volume or unit cost data. This estimate shall include long lead items that may be purchased by LMS. Contingencies shall be listed as a separate item.

B. At 60% design, submit a detailed estimate of probable construction cost, within +/- 15% accuracy. The estimate shall be similar in content to the LMS estimate format, with line items listing material quantity take-off, unit costs of materials, total cost of materials, productivity rates, hourly rates, and man hours. Include general conditions and break out construction management and supervision, overhead and profit, mark-ups and taxes, and any adjustments for anticipated changes in the bidding market relative to the project. This estimate shall contain no contingency.

C. At the 90% Construction Documents Review, update the 60% cost estimate. Accuracy shall be within +/- 10%.

D. The estimate shall include long lead equipment items purchased by LMS related to the facility modification as a separate item.

E. Provide a cost variance analysis when the closest construction bid price exceeds the final construction cost estimate by 25%. This analysis shall be submitted within 7 working days. Identify major discrepancies, changes, omissions, etc. which could account for the difference. Attend meetings as required to clarify the data and validate the bid.

F. Provide detailed cost estimates on all Construction Change Requests prepared by the A/E.

G. All construction cost estimates shall be in the approved LMS format.

13. PROJECT SCHEDULING SERVICES

A. Provide a preliminary project schedule with the proposal showing design, bidding and construction spans with anticipated design reviews and dates for permit applications.

B. Provide a detailed project schedule at 30% design showing anticipated milestone dates for design reviews, design completion, bid releases, City permit submittals and start of construction, showing spans for design, LMS approvals, bidding, City plan check, and construction of the project. This schedule shall identify any required phasing of the work.

C. The schedule shall also include procurement of long lead items and the design, fabrication, and installation of LMS provided systems.

D. Update the schedule weekly until permit is obtained and project awarded.

14. THIRD PARTY STRUCTURAL TESTS AND SPECIAL INSPECTIONS

A. Retain the services of an approved testing agency to provide structural tests and special inspections as required by the Building Code, and as recommended by the designer with LMS concurrence. Any testing agency approved by the local jurisdiction and LMS is acceptable.

B. Provide sufficient drawings, specifications, schedules and other information to the testing agency to obtain an accurate fee proposal. Submit for LMS approval during the construction bid period. Fees will be reimbursed by LMS.

15. PERMITTING AND BIDDING SUPPORT

A. Appear at jurisdictions requiring permits or other authorization for construction with all required construction documents, back up materials and permit applications.

B. Pay all Use/Design Permit and Plan Check fees not paid by the Construction Contractor. Fees will be reimbursed by LMS.

C. Correct construction documents as required by the reviewing jurisdiction. Prepare addenda as required by plan check corrections.

D. Attend pre-bid meetings.

E. Provide written answers to bidders' questions that relate to the design. Prepare addenda as required to clarify the design.

F. Prior to the award of the construction contract, update the construction documents with all addendum changes and issue as the construction set of drawings.

16. REPRODUCTION AND MAILING

A. Provide copies of meeting minutes and other documentation as required for project meetings, including estimates, reports and other miscellaneous submittals as required. In addition to hard copies, provide each set of documentation in PDF format as soon as it is available.

B. Provide the following reproduction

1. 10 hard copy sets and 1 digital media compact disk (CD) or electronically per established procedure of documentation for LMS use at each design submittal and as issued for construction. "C" size plots are preferred. Submit CDs to the LMS PM at the same time or before documents are sent out for reproduction
2. 1 CD or electronically per established procedure at 60% design with a full design set in AutoCAD

3. 2 sets of pertinent Calculations and Soils Reports (as applicable) at each design review. 3 sets of Soils Reports and the final Structural and Title 24 Calculations shall be "wet stamped" when issued for City plan check and/or permit.
4. 10 CDs or electronically per established procedure of drawings and specifications as required for bidding.
5. Documents as required for permitting
6. 3 CDs or electronically per established procedure of issued for construction drawings and specifications incorporating all addenda, in PDF and AutoCAD
7. 1 CD or electronically per established procedure of the 100% design Architectural Floor Plan and Fire Protection Drawings (3 CD's total if more than 20 fire sprinkler heads have been added or modified), for Factory Mutual review
8. 3 CDs or electronically per established procedure of construction drawings incorporating all change orders and other changes, one week prior to the FPA inspection
9. 3 CDs of record documents and 1 Set of half size drawings, divided by discipline, at each Record Drawing submittal.

C. Documents shall be in PDF format, except as noted. PDF files of drawings shall be combined into one file rather than as separate PDF's for each drawing.

D. Printing shall be collated and bound for distribution.

E. Provide all necessary mailing, courier, Fed Ex, FAX or similar delivery services for overnight delivery.

17. CONSTRUCTION SUPPORT SERVICES

A. Owner-Architect-Contractor Meetings

1. Attend construction meetings and inspection tours with representatives from engineering disciplines as directed by LMS.

B. Clarification of Construction Documents

1. Review and respond to all Requests for Information (RFI) from the Contractor with necessary information and supporting documents within 3 working days of receipt. All RFI responses must be approved by LMS prior to implementation.
2. Prepare supplemental construction documents (Bulletins) as required to respond to RFI's and to implement LMS required changes.
3. Revise the Issued for Construction (IFC) drawings when Bulletins and other design changes are issued, so that drawings remain current. Changes shall be clouded.

C. Submittal Review

1. Review all construction submittals for compliance with the intent of the design and content of the contract, with recommendation for approval, correction or disapproval.
2. Review testing and inspection reports provided by third party testing agencies.
3. Return submittals to LMS within 3 working days of receipt. Longer review periods must be approved by LMS in advance.

D. Construction Observation

1. All engineering disciplines shall perform periodic inspections of the work in progress. Inspections shall occur at minimum one-month intervals, or more frequently when called out in the project requirements, directed by LMS, or otherwise required by the progress of the work.
2. Coordinate inspections with the progress of the major elements of construction for each discipline, so that incorrect installations are detected in a timely manner.
3. Coordinate inspections with the Contractor and LMS project team.
4. Document each inspection with a Field Report noting the quality of the work, discrepancies from the Contract Documents, discussions with the Contractor and proposed corrections. The report shall also note the completeness and accuracy of the Contractor's record documents (redlines). Submit Field report within one working day.
5. Before above ceiling work is concealed by construction, compare the redlines with the finished work and note discrepancies.

E. Construction Completion:

1. At substantial completion of the work or designated portions thereof, perform a complete and detailed inspection and prepare a list of deviations from the Construction Documents. Submit a written report of all noted discrepancies to LMS within 24 hours.
2. Attend a final inspection and certify in writing that the work is complete.

18. RECORD DRAWING AND AS-BUILTING SERVICES

A. Review all as-built construction information and field red marks from the Contractor. Compare the contractor as-builts and shop drawings with the construction set kept by the A/E and note any discrepancies and changes not indicated. Review for compliance with as-built requirements in the Specifications and compile a list of deficiencies and recommend approval or rejection of the as-builts.

B. When the as-builts have been approved, update the construction drawings with as-built information. Incorporate all bulletins and design changes, and submit per Facility Engineering Design Standards Drawing Requirements.

C. Insure that operation and maintenance manuals for the proper maintenance and operation of all new systems and equipment have been submitted per the requirements of Specifications Section 01 70 00 Contract Closeout. Review manuals for correctness and completeness.

END

APPENDIX KL
DESIGN AND CONSTRUCTION ADMINISTRATION SERVICES FOR LEAN CONSTRUCTION

1. INTRODUCTION

A. This standard describes the services to be provided by Architectural and Engineering (A/E) firms for the design, permitting and construction of facilities described in the Statement of Work (SOW).

B. Design services shall comply with the Lean Construction Memorandum of Understanding (MOA).

C. In addition to pre-design and design services, the fee for design shall include permitting and bidding phases of the project, unless excluded in the project Statement of Work. Construction administration services will commence after the award of the construction contract.

D. All design and construction for LMSSC owned facilities shall comply with the following Standards

1. Facility Engineering Standards (FES), Design Standards and Construction Specifications Volumes I through IV. FES are on line at http://www.lockheedmartin.com/us/ssc/edc.html
2. Environmental Safety and Health Standards.

E. Under the Lockheed Martin MOA the Architectural, Engineering and Design Personnel and General Contractor will be referred to as the Project Management Team.

F. In addition to performing individual responsibilities, the members of the Project Management Team (design professionals and General Contractor) will collaborate with each other and other project participants (e.g. General Contractor, Subcontractors, Suppliers and Consultants) to successfully accomplish the project. Collaboration shall occur during all aspects of the project, from design through construction.

2. COMMUNICATIONS AND MEETINGS

A. The A/E shall designate a Project Manager who is responsible for the daily management of all aspects of Design and Construction and is a team member of the Lean Construction Project Management Team (ref: MOA #6b). The Project Manager shall not be reassigned during the course of the project without prior approval from LMSSC.

B. Communication between the A/E Project Manager and LMSSC shall be directed to the LMSSC Project Manager (PM), and LMSSC Procurement Representative (CA), as applicable, and as otherwise directed by the PM.

C. Project meetings will be held on a weekly basis, and as deemed necessary by either LMSSC or the A/E, unless otherwise noted in the SOW. The A/E shall record meeting minutes and publish within two working days of occurrence.

D. Early in the design phase, the appropriate A/E design disciplines shall meet with the following LMSSC Subject Matter Expert (SME) groups and the selected Contractor and Subcontractors as applicable to validate the proposed design approach, constructability and prefabrication options. The A/E Project Manager will document agreements and submit to the PM for approval prior to proceeding.

1. Mechanical Review Board to review Mechanical design.
2. Electrical Review Board to review Electrical design.
3. Cryogenics Review Board for review of cryogenic process piping.
4. Architectural Review Board to obtain approval of exterior building appearance, equipment screening and interior finishes.
5. Site Team to review locations of new structures and use of the site.
6. Lean Project Management Team

Meeting with SME groups is not intended to be a detailed technical review, however collaborative involvement of key participants during the project's early stages drives innovation, provides enhanced performance and establishes project goals and objectives. During all design review phases, a collaborative detailed review will be provided by the Project Management Team assigned to the project.

3. DESIGN SERVICES

A. Each project shall be designed for maintainability. Review proposed equipment locations in the field with the LMSSC Construction Manager (CM), General Contractor and designated Maintenance representatives to insure that new equipment is accessible for maintenance, and that new construction will not impair maintenance accessibility to existing equipment.

B. Each project shall be designed for minimal risks to facilities and flight hardware. During the design process, review possible risks with the LMSSC Risk Team and obtain validation of the proposed design approach.

C. Refer to the Design Standards for each design discipline for requirements & deliverables at each design phase.

D. LMSSC design and construction standards are intended to be consistent with LEED silver requirements. Product selections made by the A/E shall be consistent with LEED silver requirements.

E. Verify that layouts and design solutions suggested by LMSSC will accommodate the proposed functions and that they are in compliance with applicable codes and FES Design Standards. Determine what upgrades to existing facilities and utility systems will be needed to meet code, and reliably support proposed uses.

F. In addition to pre-design services outlined in the Design Standards, perform pre-design services to include:

1. Validate stated functional requirements. Provide or complete the program of spaces, listing the function, size, occupant count, utilities, equipment and other features of each space.
2. Determine utility, floor loading and other requirements to accommodate functions.
3. Determine phasing of the design and construction to support schedule need dates, prefabrication decisions, coordination of MEP building systems, and minimize disruption in occupied facilities.
4. Identify Hazardous or Regulated Materials, their use, quantities and storage locations and impact to building occupancy ratings.
5. Verify the existing facility layout and determine existing building conditions per Document Research and Field Investigation below.
6. When new equipment is located away from the project area, such as on roofs, verify that the access path, including stairs, ladders, hatches , crossovers and other access elements are compliant with Building Code and OSHA requirements, have proper clearances and fall protection, and are structurally sound and in good repair. Include required repairs, modifications and upgrades in the design.
7. As approved by the PM, retain contractor services to assess the condition of utilities and equipment serving the area, and recommend modifications and repairs.
8. Perform underground utility survey for any project requiring excavation. Submit drawings indicating as-built utility conditions. Retain underground locator services as required to perform surveys.
9. Third party contractor and locator services will be a reimbursable expense.
10. Lean process Conceptual Design shall be performed in collaboration with the Project Management Team and selected subject matter experts and shall include:

G. Lean process Conceptual Design shall be performed in collaboration with the Project Management Team and selected subject matter experts and shall include:

1. Confirm space is aligned with overall project goals.
2. Validate opportunities and options for the customer and physical outcome of the project.
3. Determine best solutions to achieve customer value.
4. Identify sustainable design outcomes that have a cost impact to the project.
5. Verify pre-design schedule milestones.
6. Confirm constructability for applicable scope of work.

H. Submit pre-design documents and drawings to the LMSSC Project Management Team for approval prior to proceeding with schematic design.

I. Schematic Design Phase (30% Design)

1. Develop alternate layouts in consultation with the Project Management Team for approval.
2. Provide deliverables per the Design Standards for each design.
3. Lean process Schematic Criteria Design shall be performed in collaboration with the Project Management Team and selected subject matter experts and shall include:

a. Integration of design input from all team members.
b. Conformation of Program requirements for building space as it relates to project goals and objectives.
c. Form adjacencies and spatial relationships of the project that meet Program requirements.
d. Coordinate major selection of building systems and performance requirements.
e. Verify schematic design concepts with the general contractor, subcontractor and specialty consultants
f. Identify sustainability targets and proposed systems.
g. Refine design schedule.
h. Refine target cost data.

J. Design Development Phase (60% Design)

1. Develop design solutions in consultation with LMSSC and the Project Management Team. Explore alternate design solutions as directed by LMSSC and Project Management Team. Facilitate meetings with LMSSC, Project Management Team and subject matter experts as required to fully determine and clarify design requirements.
2. Include designs and equipment furnished by LMSSC in the construction documents and coordinate with other work.
3. Design specific equipment and utility systems called out in the Statement of Work.
4. Identify and develop cost effective design alternatives that will provide the same or better quality or lower maintenance costs.
5. Review selection of equipment with LMSSC Maintenance to minimize spare parts required in stock.
6. Collaborate with equipment manufacturer and General Contractor to identify facility and special installation requirements.
7. Provide a sampling map for any areas that may need abatement and forward to LMSSC to obtain sampling and testing.
8. Lean process Detailed Design (Design Development Phase) shall be performed in collaboration with the Project Management Team and selected matter experts and shall include:

   a. Coordinate and integrate input from project stakeholders and ensure compliance with project requirements.
   b. Incorporate detail concept ideas into constructible form.
   c. Complete design of building systems and verify system performance.
   d. Verify fabrication decisions.
   e. Verify design budget against Target Value Design.
   f. Assess compatibility of the design and work with other trades.
   g. Verify pre-construction schedule milestones.
   h. Verify prefabrication decisions & coordination of MEP building systems.

K. Construction Documentation Phase (90% Design)

1. Lean process 90% Detailed Design shall be performed in collaboration with the Project Management Team and selected matter experts and shall include:

   a. Collaborate with General Contractor to finalize construction schedule and costs.
   b. Provide descriptive information for off-site pre-fabrication, site fabrication and construction.
   c. Verify design budget is tracking to the Target Value Design agreement.
   d. Assess compatibility of the design and work with other trades via constructability reviews.
   e. Finalize coordination of MEP building systems.

2. After approval of the design approach, provide complete documentation as required for permitting, bidding, construction and record documentation.

L. Design Completion Phase (100% Design)

1. Submit completed documents for final approval.
2. Transfer of BIM information to prime contractor if applicable.
3. Finalize construction schedule and final target costs.

4. DESIGN SERVICES PROVIDED BY OWNER

A. The A/E shall develop cubicle and partition layouts as part of their design. If layouts are provided by LMSSC, the A/E shall validate the layout and propose modifications as required. LMSSC will engage the services of the partition vendor to develop final detailed layouts. Collaborate with the partition vendor to coordinate the layout of furniture and partitions with the other work of the project, including power and data pole locations in relation to the other ceiling elements such as lights and grilles. Collaboration between the architect, office designer, general contractor and subcontractors as appropriate will ensure consistency with respect to electrical power and data pole location design and installation requirements.

5. DESIGNATED DESIGN VENDORS

A. The A/E shall retain the services of a design consultant for the following work:

1. Access control systems, security alarms, sound masking and other security systems
2. Fire detection and alarm systems
3. Public address systems

B. Acceptable consultants

1. RFI Security & Communication Services, Inc.
2. Stanley Security Solutions

6. DOCUMENT RESEARCH AND FIELD INVESTIGATION

A. During preparation of competitive proposals for design services, thoroughly review drawings provided by LMSSC, and request additional drawings as needed to determine the scope of work.

B. In the pre-design phase, research available drawings using the LMSSC document management system. Obtain copies of record drawings from the Facility Controls Department which show the project area or contain information pertaining to the project or the project area.

C. LMSSC does not warrant the accuracy of record drawings. Conditions shown on the record drawings shall be field verified. Where field verification is not possible, conditions shown on the record drawings that could result in design conflicts, such as seismic bracing within a wall, shall be taken into account.

D. Prior to starting the construction documents, perform field investigation to verify information shown on record drawings for the project area, and as required determining pertinent "as-built" conditions. This includes field surveys of attic/plenum spaces and roofs as applicable to the project. Measure locations of walls, utilities and other features that are intended to remain and produce dimensionally accurate plans. Produce new as-built drawings where existing construction is not shown on record drawings.

E. Revisions to the construction documents caused by conflicts that could have been prevented by field surveys and record drawing verification shall be at the A/E's expense.

7. GOVERNMENT AGENCY CONSULTING, REVIEW AND APPROVAL

A. Determine applicable Federal, State and Municipal requirements. Verify code interpretations with enforcement agencies and document agreements. Prior to meetings with the enforcement agency, inform the LMSSC Architect, who may elect to attend the meeting. Provide Meeting minutes and forward to the enforcement agency, LMSSC Architect, and LMSSC PM.

B. Additional design services required due to enforcement agency code interpretations that differ from the A/E interpretation will be at the A/E firm's expense.

Exception: Cases in which the enforcement agency contradicts prior agreements.

C. Appear at local jurisdiction meetings and reviews to obtain all permits, including building permits, use permits and variances applicable to this project unless otherwise directed per Permitting and Bidding services below.

D. Prepare all documentation for permit and variance applications.

8. PROJECT COORDINATION AND QUALITY CONTROL

A. Coordinate between all Design Disciplines and their work. Final Construction Plans shall be submitted as one package, fully coordinated among all design disciplines, and with coordinated sheet numbers.

B. Provide effective quality control measures to minimize errors and omissions in the design and assure constructability. Collaborate with the General Contractor and Subcontractors to maintain quality control throughout the course of the project, from pre-design through post construction services.

C. In the technical proposal identify the key personnel and describe the specific procedures to be employed in the project to achieve quality control. These procedures shall be described as to what they are, how they will be implemented, when they will occur and which documents or services will be affected. Proposals not identifying specific and verifiable quality control procedures may be disqualified.

9. DESIGN REVIEW

A. Review all drawings and documentation to assure proper coordination of all design disciplines and their consultants before submitting to LMSSC.

NOTE: LMSSC assumes no responsibility for the design's technical correctness or code compliance. Review and signoff does not relieve the A/E from responsibility for detailed conformance to design and construction standards, applicable codes and project requirements.

B. Conduct regular informal "over the shoulder" design reviews. Record LMSSC comments at each informal design review and forward these comments and pertinent meeting minutes to the CA and Project Management Team within 2 working days.

C. Conduct formal design reviews at 30%, 60% 90% and 100% complete. Refer to Facility Engineering Design Standards for a detailed description of the required contents of each review submittal. Submit the review drawings prior to the meeting, with sufficient time for a thorough review prior to the meeting. All formal reviews will be held at LMSSC.

1. At the 60% design review, conduct a job walk with all stakeholders to review all existing site and field conditions.
2. At the 100% complete design review, submit a stakeholder sign-off sheet for sign-off at meeting.

D. Incorporation of LMSSC Design Review Comments

1. LMSSC comments will be forwarded 5 working days after each formal design submission. The comments will identify deviations from stated project requirements and standards of the submitted design and documentation.

2. Incorporate all LMSSC and Project Management Team design comments, or provide a written rationale refuting the comment, within five working days. Refutations shall be supported by appropriate code references, cost analyses or other specific justification. Submit copies of LMSSC comments with responses and indicating what action has been taken.
3. The detailed project requirements are subject to change through the 60 percent design review, after which the requirements will be frozen. During this time changes to the design and documentation required by LMSSC and Project Management Team review comments shall be made at no additional cost as long as they are within the original scope of the project.
4. Any comments or directions that, in the opinion of the A/E, are outside the scope of services shall be immediately brought to the attention of the CA, in writing, for resolution. No work considered to be outside the scope of services shall begin without the express approval of the CA.

10. HAZARDOUS MATERIAL REMEDIATION

1. Prior to demolition and by 30% design, LMSSC will provide sampling for Asbestos Containing Materials, Asbestos-Containing Construction Materials, and cadmium/lead containing paints.
2. Incorporate the abatement work into the design to allow for bidding out the work.

11. CONSTRUCTION SPECIFICATIONS

A. During the Design Development Phase of the project and working collaboratively with the General Contractor:

1. Research and identify potential building materials, systems and equipment and develop a written analysis comparing the costs and features of alternate selections.
2. Develop a list of all potential long lead items, identifying time spans, manufacturers, estimated costs, modes of delivery, etc.
3. Prepare final specifications for any long lead items to be pre-purchased by LMSSC to expedite delivery. The specifications for the construction project shall indicate that the contract for the pre-purchased equipment will be assigned to the construction contractor, including receipt, acceptance, and installation and testing, and shall be covered under the construction contractor's warranty.

B. During the Construction Documentation Phase of Design develop complete specifications, working collaboratively with the General Contractor, as required for the construction of the project.

1. Where practical, only Supplemental Specifications will be required. Supplemental Specifications are additions and modifications to the LMSSC Construction Specifications required to tailor them to the project.
2. Supplemental specifications shall follow the CSI and Facility Engineering standard format.

3. The supplemental specification package table of contents shall list new and modified sections and shall include all the other LMSSC Construction Specification sections that apply to the project.
4. Supplemental Specifications shall be provided only as WHOLE SECTIONS. No "addendum type" sections will be allowed.
5. The materials and methods of construction specified in any new or modified section shall meet or exceed the standards of quality established by the LMSSC FES Construction Specifications.
6. Include a list of submittals and samples required from the subcontractors required during construction compiled in consultation with and provided to the LMSSC PM.
7. Respond to questions from trades bidding on the project.
8. Respond to pre-fabrication studies to ensure integrity of the design intent.

C. During the Construction Documentation Phase of Design, complete the LMSSC Checklist for Test and Inspection per Appendix E of the FES Design Standards, indicating items that need to be inspected by LMSSC's Testing Agency. Submit at the final design review submittal.

12. RECORD DOCUMENTATION

A. Submit record construction documents per Facility Engineering Design Standards at the time that the Building Permit is obtained. Drawings shall incorporate all design changes and include addenda and City review comments. Include all studies and calculations prepared for the project.

B. At the end of the project produce as-built record drawings per the requirements of Record Drawing and As-Builting Services later in this document.

13. PROJECT ESTIMATING SERVICES

A. Provide a preliminary construction cost estimate at 30% design. Accuracy shall be within +/- 25% and shall be based upon area, volume or unit cost data. This estimate shall include long lead items that may be purchased by LMSSC. Contingencies shall be listed as a separate item.

B. At 60% design, working collaboratively with the General Contractor, submit a detailed estimate (Target Value Costs) of probable construction cost, similar in content to the LMSSC estimate format. The estimate shall provide line items with material quantity take-off, unit costs of materials, total cost of materials, productivity rates hourly rates and man hours. Estimate shall be within +/- 15% accuracy. This estimate shall break out contractor overhead and profit, mark-ups and taxes, and any adjustments for anticipated changes in the bidding market relative to the project. This estimate shall contain no contingency.

C. At the 90% Construction Documents Review, update the 60% cost estimate. Accuracy shall be within +/- 10%.

D. The estimate shall include long lead equipment items purchased by LMSSC related to the facility modification as a separate item.

E. Provide detailed cost estimates on all Construction Change Requests prepared by the A/E.

F. All construction cost estimates shall be in the approved LMSSC format.

14. PROJECT SCHEDULE

A. Provide a preliminary project schedule using Last Planner System with the proposal showing design, bidding and construction spans with anticipated design reviews and dates for permit applications.

B. Provide a detailed project schedule at 30% design using Last Planner System showing anticipated milestone dates for design reviews, design completion, bid releases, City permit submittals and start of construction, showing spans for design, LMSSC approvals, bidding, City plan check, and construction of the project. This schedule shall identify any required phasing of the work.

C. The schedule shall also include procurement of long lead items, design, pre-fabrication, site fabrication and installation of LMSSC provided systems.

D. Update the schedule weekly until permit is obtained and project awarded.

15. THIRD PARTY STRUCTURAL TESTS AND SPECIAL INSPECTIONS

A. Retain the services of an approved testing agency to provide structural tests and special inspections as required by the Building Code, and as recommended by the designer with LMSSC concurrence. Any testing agency approved by the local jurisdiction and LMSSC is acceptable.

B. Provide sufficient drawings, specifications, schedules and other information to the testing agency to obtain an accurate fee proposal. Submit for LMSSC approval during the construction bid period. Fees will be reimbursed by LMSSC.

16. PERMITTING AND BIDDING

A. Appear at jurisdictions requiring permits or other authorization for construction with all required construction documents, back up materials and permit applications.

B. Pay all Use/Design Permit and Plan Check fees not paid by the Construction Contractor. Fees will be reimbursed by LMSSC.

C. Correct construction documents as required by the reviewing jurisdiction. Prepare addenda as required by plan check corrections.

D. Attend pre-bid and preconstruction meetings.

E. Provide written answers to bidders' questions that relate to the design. Prepare addenda as required to clarify the design.

F. Prior to the award of the construction contract, update the construction documents with all addendum changes and issue as the construction set of drawings.

17. REPRODUCTION AND MAILING

A. Provide copies of meeting minutes and other documentation as required for project meetings, including estimates, reports and other miscellaneous submittals as required. In addition to hard copies, provide each set of documentation in PDF format as soon as it is available.

B. Provide the following reproduction

1. 10 sets of complete design documentation for LMSSC use at each design submittal and as issued for construction. "C" size plots are preferred.
2. 2 sets of pertinent Calculations and Soils Reports (as applicable) at each design review. 3 sets of Soils Reports and the final Structural and Title 24 Calculations shall be "wet stamped" when issued for City plan check and/or permit.
3. 25 sets of full-size construction drawings and specifications as required for bidding and construction.
4. Documents as required for permitting
5. 1 copy each of the 100% design Architectural Floor Plan and Fire Protection Drawings (3 sets total if more than 20 fire sprinkler heads have been added or modified), for Factory Mutual review.
6. 2 sets of structural drawings only and 2 sets of Specifications with checklist, for LMSSC Special Inspection & Testing Agency, if required, at the completion of design.
7. 10 C sized sets of latest construction drawings for FPA inspection.

C. Submit PDF files of all documents in digital media to the LMSSC PM prior to sending out for reproduction.

D. All printing shall be collated and bound for distribution.

E. Provide all necessary mailing, courier, Fed Ex, FAX or similar delivery services for overnight delivery.

18. CONSTRUCTION SUPPORT AND POST CONSTRUCTION SERVICES

A. During the Construction Phase of the project:

1. Attend construction meetings and inspection tours with representatives from engineering disciplines as directed by LMSSC.

2. Review and respond to all Requests For Information (RFI) from the Contractor with necessary information and supporting documents within 3 working days of receipt. All RFI responses must be approved by LMSSC prior to implementation.
3. Prepare and submit Construction Change Requests (CCR's) as required by RFI's or to implement LMSSC required changes. Revise or develop necessary construction documents and cost estimates.
4. Revise the Issued for Construction (IFC) drawings when Bulletins, CCR's, and other design changes are issued, so that drawings remain current. Changes shall be clouded.
5. Review all construction submittals for compliance with the intent of the design and content of the contract, with recommendation for approval, correction or disapproval.
6. Review testing and inspection reports provided by an LMSSC testing agency of materials or components.
7. Before above ceiling work is concealed by construction, compare the drawings with the finished work and revise the drawings to match existing.
8. Provide BIM information updates as required responding to field conditions and design consultant needs.
9. Coordinate any changes due to field conditions not foreseen in the BIM.
10. Work with the prime contractor to ensure the construction is proceeding in conformance with design intent.

B. During the Post Construction Phase of the project:

1. Determine substantial completion of the work or designated portions thereof. Conduct, with LMSSC representatives, an inspection of the Contractor's work, and prepare an accurate list of deviations from the Construction Documents. Verify foot candle levels and approve HVAC air balance reports. Submit a written report of all noted discrepancies to LMSSC within 24 hours.
2. Attend a final inspection and certify in writing that the work is complete.
3. Work with the LMSSC on user needs to use BIM for life cycle benefit.

19. RECORD DRAWING AND AS-BUILTING SERVICES

A. Review all as-built construction information and field red marks from the Contractor. Compare the contractor as-builts and shop drawings with the construction set kept by the A/E and note any discrepancies and changes not indicated. Review for compliance with as-built requirements in the Specifications and compile a list of deficiencies and recommend approval or rejection of the as-builts.

B. When the as-builts have been approved, update the construction drawings with as-built information. Incorporate all bulletins and design changes, and submit per Facility Engineering Design Standards Drawing Requirements.

C. Insure that operation and maintenance manuals for the proper maintenance and operation of all new systems and equipment have been submitted per the requirements of Specifications Section 01 70 00 Contract Closeout. Review manuals for correctness and completeness.

END

REVISION HISTORY

Release Date	Section	Change Description	Author/Lead
3/1/2023	APPENDIX D	Contact updates	Bert Palmon
12/15/2022	Appendix K	Alternative methods in receiving design documentation electronically	Nancy Luu
12/15/2022	Section 20	New panels being used in the existing FMAS network	Vance Lohoff
09/15/2020	Section 16	BAS controls standard from TAC I/A to ALC WebCTRL/Optiflex. Controls communications protocol standard from LONworks to BACNet. Includes integration/control of generators, lighting, humidifier, and power into BACnet controls system.	Reagan Logier
04/30/2020	Section 04	Added Compressed Air Condensate Drain Valve.	Jacob Huth
02/28/2020	Section 06	Added section 6.6.2 due to changes in Gov security requirements. Changed Electrical and Tempest from 6.8 to 6.7 to match worksheet. Removed retired & antiquated spin dial call-outs, incorporated newest revisions and current part #'s. Updated 6.4.7-c to ensure permanently attached hasp/staple on all HVAC access ports	Gary Howerton
05/15/2019	Section 06	Re-formatted worksheet to provide a more user-friendly and more descriptive version, added several new bullets to capture the Governments construction changes.	Gary Howerton
12/15/2018	Section 16	Modification and addition of new graphics for the building automation graphical user interface. The requirement for all VFDs to only have Auto/OFF features has also been removed	Ruben Diaz
2/28/2017	Appendix K	Removed specific design procedures and relocated to General Design Standards. Added requirement for reproduction required for Record Document submittal.	Mike Dooley
2/28/2017	General Design Standards	Relocated information on design procedures from Appendix K to this document. Added section Construction on Roofs. Changes not marked.	Mike Dooley
10/30/2016	Appendix K	Construction observation added as a construction support service. Article on Construction Support Services	Kim Miller

		reformatted.	
10/30/2016	Section 11	Add requirement for stamp and design company to drawings	Kim Miller
10/30/2016	Section 11	Added reference to Standard Detail V3-1. Requiring HVAC unit identification	Dave Kaeini
10/30/2016	Section 04	Updated equipment list	Kim Miller
10/30/2016	Section 04	Prohibit curbs for support of mechanical equipment	Mark Witkowski
10/30/2016	Section 04	Exhaust fans required at break areas.	Justin Artam
10/30/2016	Section 04	Added submittal procedure for list of equipment removed	Dave Kaeini
10/1/2016	Section 05	Added requirement to submit a list of removed equipment.	Dave Kaeini
10/1/2016	Section 05	Edited lighting guidelines and switching to comply with California Title 24	Kim Miller
06/30/2016	Section 02	Miscellaneous minor changes requested by LMSSC Environmental Safety and Health	Ramzi Srouji
04/15/2016	Section 02	Requires removable panels at roof screens to allow large pieces of equipment to be craned onto the roof for replacement.	Kim Miller
11/10/2015	Interior Signage Standards	Corrected version	Mike Dooley
11/2/2015	Section 12	Section 12 has been removed and is under revision.	Joan Ferrin-Pann
11/2/2015	Section 06	Additional information and clarifications throughout document	Gary Howerton
11/2/2015	Section 02	Clarifies finish of existing doors in renovated areas. Requires full depth insulation in all walls. Clarifies signage requirements.	Joan Ferrin-Pann
11/2/2015	Appendix I	Plant 1 Color Standards have been removed and is under revision.	Mike Dooley
9/1/2015	Section 05	Design Standard Section 05 - Electrical: Revised to refer to new section 26 50 00 and to delete obsolete lighting control information	Mike Dooley
4/27/2015	Interior Signage Standards	Add 05 Interior Signage Standard to Finish Standards	Mike Dooley
4/15/2015	Finishes Master list	Alternate manufacturer and colors for wall base was added. Caesarstone countertop color for Cosmos palette was changed.	Joan Ferrin-Pann

4/1/2015	Section 4	Provide indications on plans and provide design details indicating the clear floor area for critical equipment maintenance and repairs. Provide chemical feed station and corrosion coupon racks on condenser water loop on cooling towers and chilled and hot water systems. Provide cooling tower basins with level indications and tie into the FMAS. Provide manual smoke purge for areas with gaseous fire suppression systems.	Mike Dooley
4/1/2015	Appendix K	Add Stanley Security Systems to Designated Design Vendors. Add obtaining special inspection services to A/E scope of services	Mike Dooley
4/1/2015	Appendix KL	Add Stanley Security Systems to Designated Design Vendors. Add obtaining special inspection services to A/E scope of services	Mike Dooley
2/19/2015	Section 19	Section taken out and left blank per Kim Miller's direction. Will be published at a later time.	Kim Miller
2/1/2015	Interior Finish Standards	Changed paint colors and floor tiles	Joan Ferrin-Pann
2/1/2015	Appendix K	Clarified that design services extend through bid period, and that CA services start when construction awarded. Clarified requirements for estimate content. Updated reproduction to conform to current practice.	Mike Dooley
2/1/2015	Appendix KL	New Appendix KL - Design And Construction Administration Services For Lean Construction. Based on existing Appendix K, which has been modified to apply to lean construction projects	Mike Dooley
2/1/2015	Section 2 Architectural	Requires designers to provide hazardous construction material sampling results on drawings	Mike Dooley
2/1/2015	Section 8 Fire Protection	Section 28 31 00 Fire Detection and Alarm: Changes to equipment. Changes to installation for maintainability. Section 8 Fire Protection Design Standards: Clarification of design requirements	Mike Dooley
2/1/2015	Section 11 Drawing Procedures	Text used on drawings shall be 1/8 inches high when plotted at fill scale	Mike Dooley
5/1/2014	Section 02 Architectural	Section 2 Architectural Design Standard has been revised to be consistent with new ladder detail	Mike Dooley

4/7/2014	Appendix K	Revised to include SST as a designated design contractor	Mike Dooley
4/7/2014	Section 5 Electrical	Revised to require engineering design is required for manhole penetrations	Mike Dooley
3/12/2014	Section 11 Drawing Procedures	Revised room/door number procedure per current process, clarified use of wall types, and changed revision/title blocks to new standard.	Mike Dooley
1/30/2014	Section 21 Landscape	This is a new standard.	Mike Dooley
12/2/2013	Section 20 FMAS	Section 20 Facility Maintenance Alarm System Design Standards has been revised. Revisions are marked with a solid bar in the margins.	Mike Dooley
12/2/2013	Section 04 Mech & Plumb	Allowable refrigerants have been revised.	Mike Dooley
10/10/2013	Section 02 Architec tural	The standard has been supplemented with additional information and clarifications. Signage requirements have been revised and expanded.	Mike Dooley
7/26/2013	Appendix K	Change to the design review requirements, and a new requirement for an Information for Bidders document	Mike Dooley
7/26/2013	General	Added “Coordination of New Work with Existing Construction”	Mike Dooley